IR--1155

DE91 005301

An Improved Prototype Ignition Suppression Device for Underground Electrical Face Cutting Equipment

---

U.S. Department of Labor

Elizabeth H. Dole, Secretary

Mine Safety and Health Administration

William J. Tattersall, Assistant Secretary

IR 1155

1988

DISTRIBUTION OF THIS DOCUMENT IS UNLIMITED

MASTER

AN IMPROVED PROTOTYPE IGNITION SUPPRESSION DEVICE FOR UNDERGROUND ELECTRICAL FACE CUTTING EQUIPMENT

By Steven J. Luzik

Bruceton Safety Technology Center, Pittsburgh, Pa.

UNITED STATES DEPARTMENT OF LABOR

Mine Safety and Health Administration

ACKNOWLEDGEMENTS

The author is indebted to Messrs. Thomas M. Fircak, Joseph P. Trona, and Anthony Kerkan, Industrial Safety Division, for their assistance in the testing program.

CONTENTS

Page

Abstract..... 1

Introduction..... 1

Ignition suppression hardware and instrumentation..... 6

MSHA suppression canister..... 6

Selection of extinguishing agents..... 8

The Ultraviolet Detection System..... 8

Test facility..... 9

Construction of simulated cutting head and release device support system 12

Testing..... 14

Effect of fireball growth rate on methane concentration..... 14

Distribution pattern tests around a simulated cutter head..... 17

Gallery ignition suppression tests - Series I..... 19

Discussion of Series I test results..... 20

Efforts to reduce noise..... 25

Gallery ignition suppression tests - Series II..... 32

Conclusions and recommendations..... 32

ILLUSTRATIONS

1. Block diagram: Ignition Suppression System..... 4

2. U.S. Bureau of Mines' prototype canister release device..... 5

3. MSHA suppression canister..... 7

4. 420 cubic foot gas zone..... 11

5. Test set-up for ignition suppression tests..... 13

6. Canister locations at three drum heights..... 21

CONTENTS

Page

ILLUSTRATIONS (Cont.)

7. Proposed peak dβ exposures versus β durations..... 24

8. Peak noise levels versus extinguishant quantity..... 28

9. Experimental canister rupturing regimes..... 29

10. MSHA baffled muffler assembly..... 31

11. Baffled mufflers in place on lower support..... 33

TABLES

1. Methane ignition test results..... 15

2. Detector response time characteristics at 7.5% methane..... 16

3. Results of ignition suppression tests in simulated mine face gas zone - Series I..... 22

4. Results of time delay blasting circuit tests with Ensign-Bickford canisters..... 27

5. Test Results: Ignition suppression test with muffled canisters - Series II..... 34

AN IMPROVED PROTOTYPE IGNITION SUPPRESSION DEVICE FOR UNDERGROUND ELECTRICAL FACE CUTTING EQUIPMENT

by

Steven J. Luzik[1]

ABSTRACT

An improved ignition suppression device was investigated by the Mine Safety and Health Administration. The device, developed by the Industrial Safety Division, is designed to be installed on the boom of a continuous mining machine and would function to suppress frictionally induced methane ignitions in the face areas of underground coal mines. It was anticipated that the basic device could be modified to accommodate other types of electrical face cutting equipment with minimal design changes.

Ultraviolet (UV) detection is used to sense the developing fireball and suppression is achieved by explosively rupturing steel canisters filled with an extinguishing agent. Canisters are enclosed in specially designed baffled mufflers which serve to abate high impulse noise and afford protection against roof falls and other physical abuse. The devices proved successful in suppressing simulated frictional ignitions in a limited number of gallery tests incorporating a mock-up cutter head of a continuous mining machine.

INTRODUCTION

The explosion hazard associated with the frictional ignition of methane at the working face in an underground coal mine has long been recognized. Ventilation requirements of the law are met and often exceeded, but the liberation of methane in the gassier seams is often so great that adequate dilution cannot take place. Localized areas of flammable mixtures can, therefore, exist in the

[1] Supervisory Chemical Engineer, Industrial Safety Division, Technical Support, Pittsburgh, Pa.

vicinity of the face. Friction, generated between the cutter bits and impurities in the coal seam and over or underlying rock formations, often provides sufficient energy to ignite these pockets of flammable gas. Since the possibility exists for any one of these small ignitions to propagate into a much larger secondary coal dust explosion, the area of ignition suppression research is of key importance. Compounding this problem is the steady increase of reported frictional ignitions. Two primary reasons for this trend are mining of deeper, more gassy seams and increasing productivity through advanced technology. Since growth rates of developing methane fireballs are on the order of several hundred inches per second, rapid detection and extinguishant release systems are necessary to effectively suppress ignitions before dangerous explosive pressures are developed.

Pre-1969 research performed by the U.S. Bureau of Mines[2/] indicated that flammable mixtures of methane in air, ignited at the working face, could be sensed by optical means and suppressed in their incipient stages by an explosively-actuated ignition suppression system. This research was instrumental in the establishment of a congressional mandate in the Coal Mine Safety and Health Act of 1969 and the Federal Mine Safety and Health Act of 1977. Section 317q of the Act states that,

> "The Secretary shall require, when technologically feasible, that devices to prevent and suppress ignitions be installed on electric face-cutting equipment."

[2/] Mitchell, D. W., J. Nagy, and E. M. Murphy. "Preventing Explosions from Gas Ignitions at the Face: A Progress Report," Paper No. 16, 12th International Conference of Directors of Safety in Mines Research, Dortmund, Germany, Sept. 11-15, 1967, 20 pp.

A basic ignition suppression system consists of four components (Figure 1): (1) a detector to sense the developing methane fireball; (2) control circuit which interprets the signal from the detector and sends a pulse to the blasting circuit; (3) blasting circuit which provides a pulse of current to a detonator in the release device, explosively rupturing (4) the release device to blanket the fireball with extinguishant. The whole scenario of ignition detection and suppression typically takes place in less than 100 milliseconds.

Since the establishment of the mandate, extensive research has been undertaken by the U.S. Bureau of Mines on this subject[3/]. As a result of this work, ultraviolet detection has been established as the most reliable means of detecting a methane fireball. A practical release device for dispersing the extinguishing agents was not developed, however, in any of these research efforts. Some success was achieved in suppressing ignitions with the Fenwal bottle on a tunnel boring machine, but the bottle and cannon-type release devices proved to be unacceptable for installation on a continuous mining machine. Extinguishant release rate was too slow and dispersion was too narrow which necessitated numerous devices to effectively cover the area around the cutter head.

The Industrial Safety Division's efforts to develop an ignition suppression device focused around early work performed by the U.S. Bureau of Mines on canister-type release devices[4/]. The release devices consisted of horizontal tubes containing an extinguishing agent and an explosive actuator (Figure 2). The tubes were constructed of Schedule 40 aluminum tubing scored longitudinally

---

[3/] "Coal Mine Fire and Explosion Prevention;" Proceedings: Bureau of Mines Technology Transfer Seminars, Pittsburgh, Pa. March 2, 1978, and Denver, Co., March 14, 1978, IC 8768, 99 pp., 1978.

[4/] Kawenski, E., et. al. "Further Development of an Explosion Quenching Device," International Conference of Safety in Mines Research, Tokyo, Japan, Nov. 25, 1969.

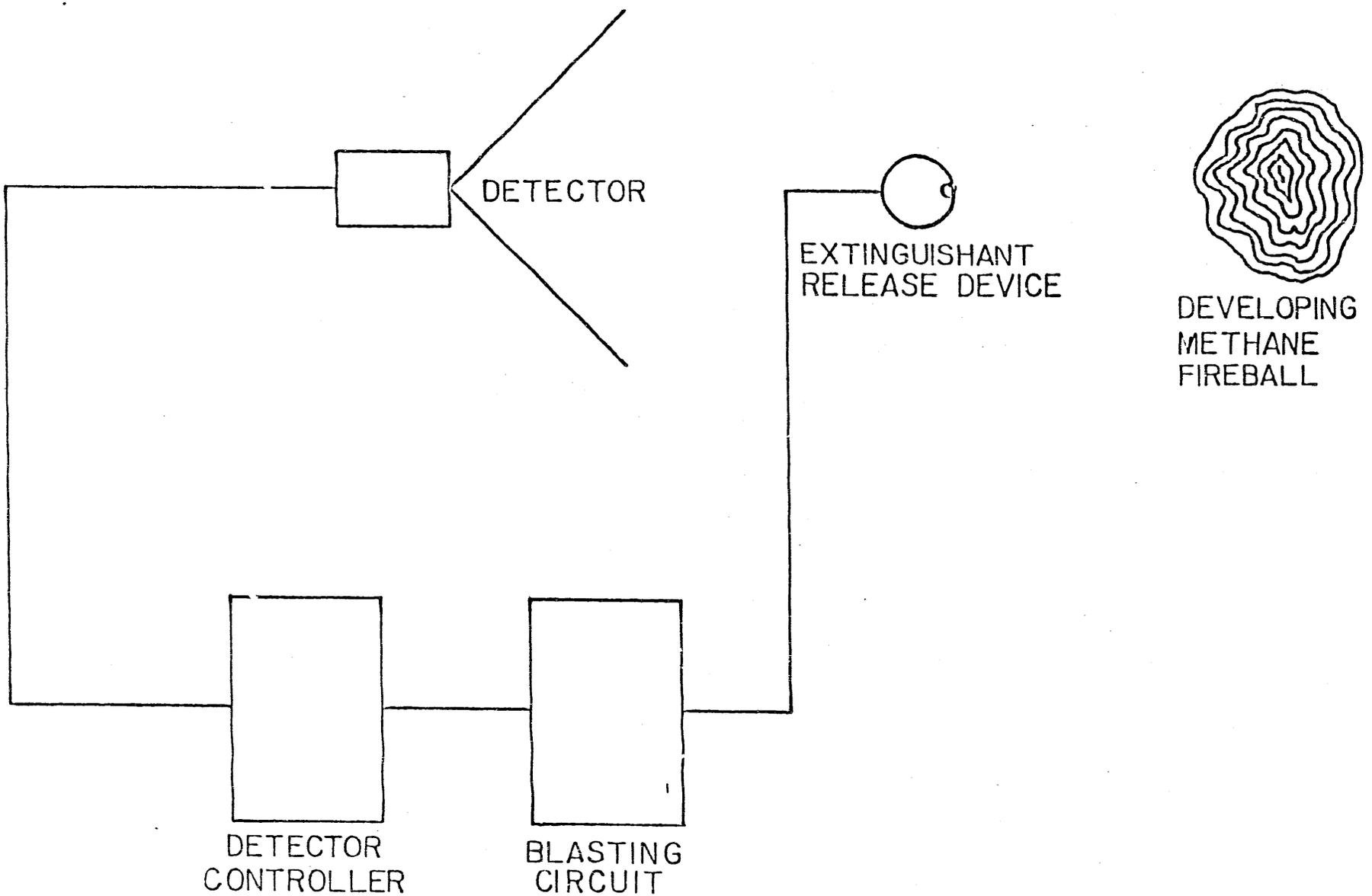

FIGURE 1 - Block Diagram: Ignition Suppression System

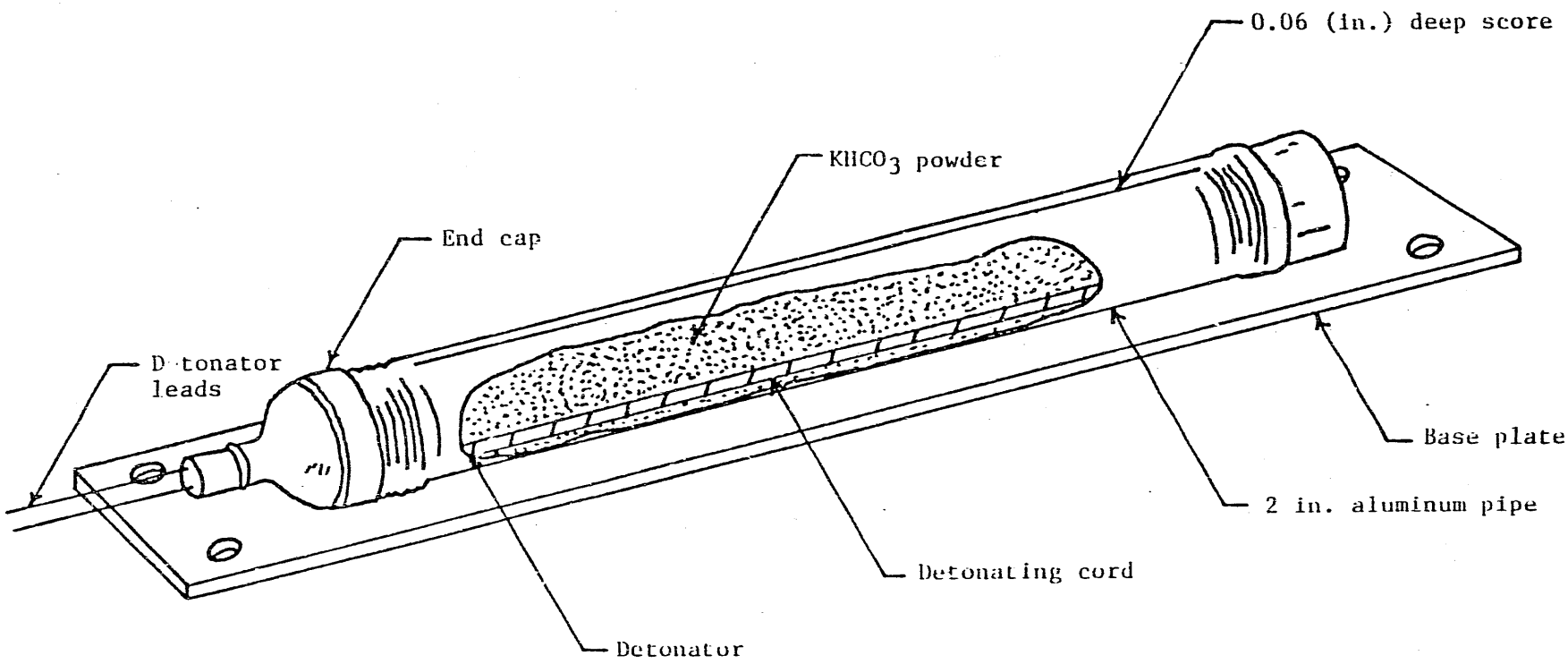

FIGURE 2 - U.S. Bureau of Mines' Prototype Canister Release Device

and radially to a depth of .060 inches. A detonating cord was looped axially in the tube under the scored area in contact with the extinguishing agent. The overpressure in the tube, generated when the cord functioned, served to rupture it at the score lines. The tubes were designed for mounting on the table of a continuous mining machine adjacent to the cutter drum. Since the tubes were essentially 2- or 3-inch pipe that opened along the longitudinal axis, they afforded broad coverage of extinguishant and would occupy very little space on the mining machine.

Extremely high impulse noise levels (∿200dβ), generated when these tubes ruptured, was the primary reason for discontinuance of the research with this type of release device.

IGNITION SUPPRESSION HARDWARE AND INSTRUMENTATION

MSHA Suppression Canister

The canister-type release device was developed by the Ensign-Bickford Company for MSHA and was patterned around the prototype device previously described. The canister (Figure 3) consisted of a 4-foot length of 2-inch O.D. Schedule 20 steel tubing with silver-soldered end caps. Cutting action was effected by detonation of a length of flexible linear-shaped charge, spring loaded in place against the inner wall of the tube. A 1-inch threaded cap, with a Schrader valve installed in the center, provided a means for adding solid and liquid extinguishant. The canister was design tested to 400 psig. The shaped charge consisted of 25 grains per foot of RDX (cyclonite) mixed with potassium hydrogen tartrate (KHT). The function of the KHT was to inhibit flame development as the charge was functioning to sever the canister wall. A special

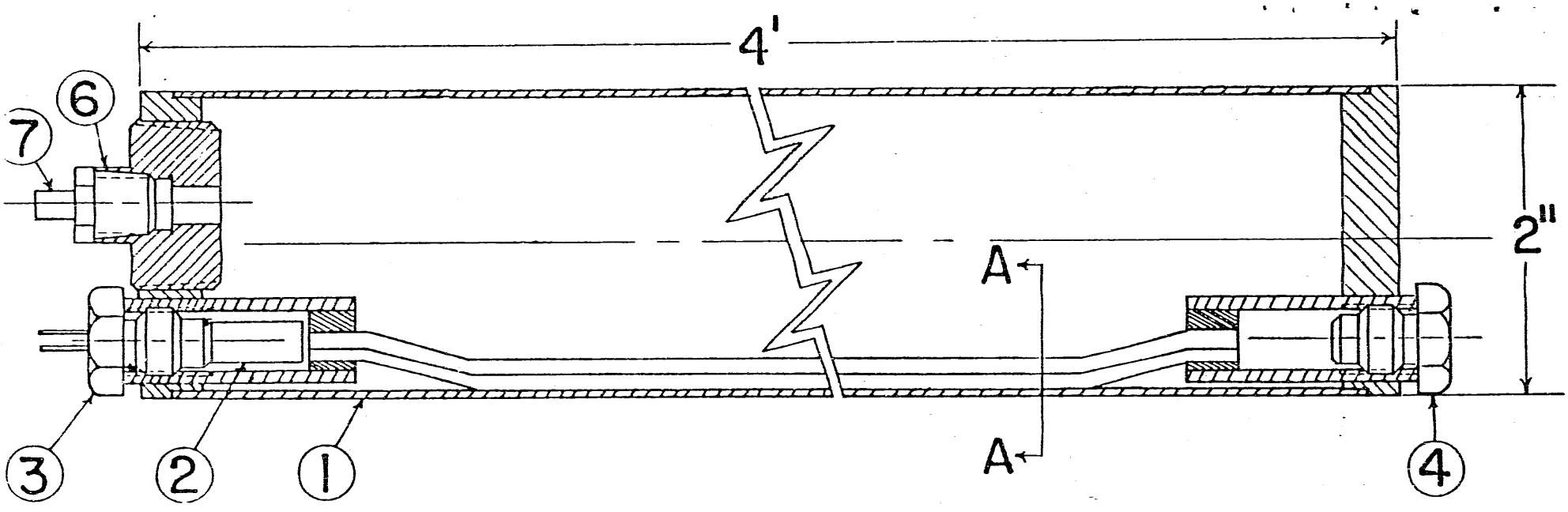

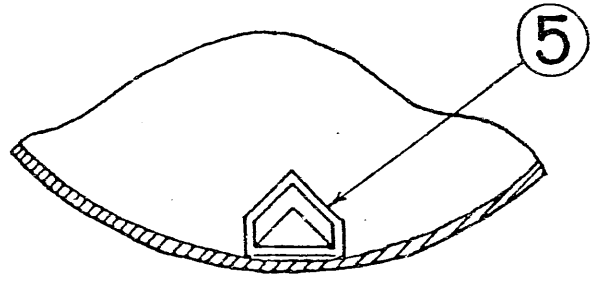

SECTION A-A

Scale: 2" = 1"

1- CANISTER SUB-ASS'Y
2- DETONATOR, ELECTRIC
3- PLUG-DRILLED
4- PLUG
5- 25GR./FT. FLSC
6- VALVE ADAPTER
7- TANK VALVE

FIGURE 3 - MSHA Suppression Canister

1-amp/1-watt no-fire detonator was selected for use with this canister. This detonator required a minimum of 2.5 amperes to heat the bridgewire and was chosen for added safety.

Selection of Extinguishing Agents

The pre-1970 research by the U.S. Bureau of Mines involved the use of Halon 1301 (monobromotrifluoromethane) as the primary extinguishant. Halon 1301 is a liquified, compressed gas which boils at -72°F.

For the purpose of this test program, a hybrid mixture of Halon 1301 and potassium bicarbonate (Purple K) was chosen. The potassium bicarbonate powder used was further treated with silicone to retard agglomeration during storage. Average particle diameter was about 18 microns. Hybrid combinations have been shown to be significantly more efficient for suppressing incipient ignitions than any of the constituents used alone[5/].

The expanding, vaporizing Halon 1301 is used to disperse the intimately mixed Purple K when the canister is ruptured. Pressurizing the system with an inert gas, such as dry nitrogen, will not disperse the dry chemical in this type of release device since intimate mixing between solid and gas is not effected within the tube.

The Ultraviolet Detection System

An ultraviolet detection system, manufactured by the Detector Electronics Corporation, Minneapolis, Minnesota[6/], was chosen for use in the test program. The same type of system was used in previous research work and proved to be an excellent means of detecting a growing methane fireball.

[5/] Liebman, I., J. Corry, et. al. "Extinguishing Agents for Mine Face Gas Explosions," USBM RI 8294, 1978, 14 pp.

[6/] Reference to specific trade names or manufacturers is made for identification purposes only and does not imply endorsement by the Mine Safety and Health Administration.

The ultraviolet detection system, employed in this test program, included the following options: (1) an optical-integrity feature which continuously monitored the detector lens to warn of build-up of contaminents which could render the detector insensitive; (2) a capacitive-discharge blasting circuit; and (3) a detonator bridgewire monitor which continuously checked for continuity.

A series of tests were conducted to determine the sensitivity of the commercial detectors to electrical sparks. Test results indicated that the detectors were sensitive to electrical sparks. To prevent the occurrence of false triggering, the sparks were physically shielded from the field of view of the detectors.

A series of tests were also performed to determine detector response times to UV radiation emitted from expanding methane/air fireballs. Test results showed that all four detectors had essentially the same characteristics and that any one could be used with comparable results.

Test Facility

The Industrial Safety Division's Gas Gallery was utilized for the ignition suppression test program. This Gallery, measuring 20-feet wide x 25-feet long x 6-feet high, is constructed of 1/4-inch steel walls and roof and is open on one side. Six vent openings are provided in the three walls to keep explosion pressures below the 1.5 psig design pressure. A small section of this Gallery was modified for the purpose of performing tests on ignition suppression. A plywood wall was constructed which effectively split the chamber into two parts. In addition to this, plywood was fitted over the two vent openings on the east

side of the Gallery. A polycarbonate plastic window was installed in the south vent and used as an observation port for high-speed photographic equipment.

An electromagnet, installed near the roof, held an 8-foot steel bar which was attached to the confining curtain. The bottom of the curtain was bonded to a solid wood confining partition. Six-mil polyethylene plastic was used as a confining curtain. A new piece was used for each test. Masking tape held the curtain to the perimeter of the gallery. The volume enclosed by the confining curtain measured 420 cubic feet.

Bottled gas was used as a source of methane and was automatically metered into the test chamber. An infrared analyzer sampled at three locations inside the gas zone to insure that a homogeneous mixture of methane in air existed. Two ventilation fans with totally enclosed motors provided mixing in the gas zone. This arrangement afforded excellent mixing and the three sampling locations never differed in percent methane recorded by more than 0.1%. Figure 4 shows the gas zone and location of sampling and mixing hardware.

A capacitively discharged spark energy system was used to ignite the flammable methane/air mixtures in the gallery.

High-speed rotating prism cameras were employed to film methane ignitions in the gallery. These films and electronic circuitry were used to accurately measure system response times. At the onset of the test program, film types, camera speeds, f stops, and lighting were all varied in an effort to develop parameters for optimum viewing of the developing methane fireball. High-speed color film, used with the natural lighting of the gallery, provided the best results. Optimum film speeds were between 200 and 400 frames per second. Small

1 MIXING FANS
2 CH_4 FEED
3 CH_4 SENSORS
4 CURTAIN
5 BAR
6 ELECTROMAGNET
7 WOOD STOPPING
8 CAMERA
9 UV SENSORS
10 DARK ROOM

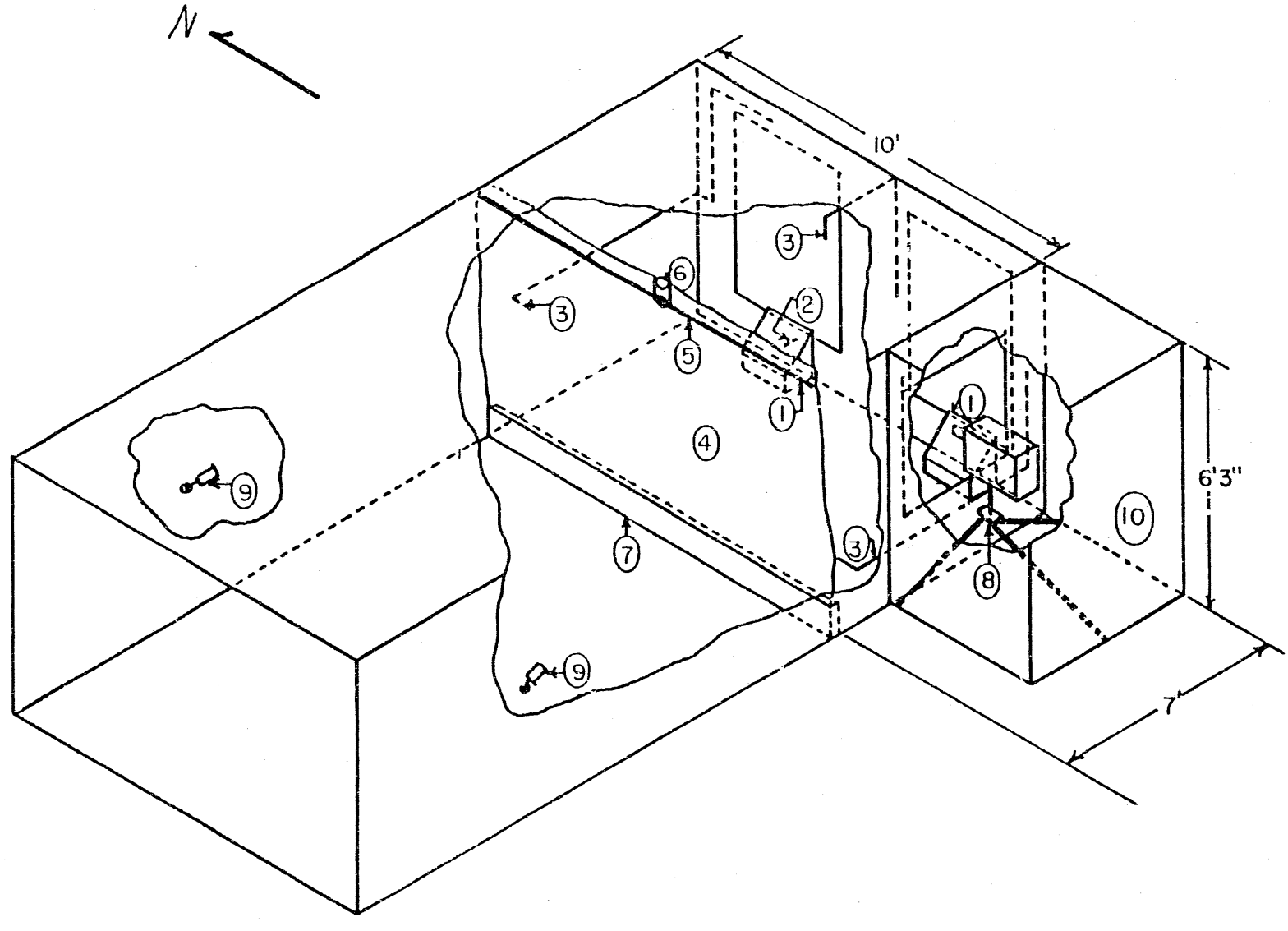

FIGURE 4 - 420 Cubic Foot Gas Zone

clouds of pulverized coal dust were found to enhance the visibility of the fire-ball and were utilized in most tests. These clouds were produced by releasing air into a funnel containing a 2-inch screen. Coal dust, placed on the screen, was dispersed in the vicinity of the spark. Two UV detectors, located on the north and south walls approximately 15 feet from the face of the gallery, were used to detect the electrically-initiated methane fireball.

A sequencing system was developed which incorporated a series of relays to trigger four events at predetermined time intervals. These events were: (1) release of confining curtain; (2) camera start; (3) coal dust dispersion, and; (4) spark initiation of test mixture. The camera was stopped approximately 2 seconds after initiation of the gas body.

Construction of Simulated Cutting Head and Release Device Support System

A 2-foot diameter, 8-foot long, galvanized steel drainage conduit was fitted on the ends with circular steel plates and welded at the seams. This conduit was used to simulate the cutting head of a continuous mining machine. A system was constructed from structural steel members that enabled two-dimensional movement of the drum. The drum could be moved up, down, forward, and backward from the face in 3-inch increments. The drum was installed in the gas gallery near the east wall. A canister release device support system was also fabricated from a 1/4-inch steel angle iron. The support system, which simulated the positions that the canisters would assume on the table of a continuous mining machine, is shown in place in Figure 5.

TESTING

Effect of Methane Fireball Growth Rate on Concentration

Tests were conducted to determine fireball growth rate as a function of methane concentrations prior to suppression tests. These tests afforded information on growth rate as well as fireball diameter at the detection time. Data is given in Tables 1 and 2.

Based on examination of this data, the following observations and conclusions were made:

1. The growth rate of the fireball at any given concentration did not seem to be consistent. Factors such as turbulence, temperature, humidity, homogeneity of gas and air mixture, etc. can affect methane flame speeds. For this reason, a range of fireball growth rates was observed at each concentration evaluated.
2. The addition of coal dust to the methane atmosphere near the spark resulted in an unpredictable observable shape formation of the fireball. Both spherical and elliptical fireballs were observed and the elliptical configurations further deviated in the angles at which the major axis passed through the spark initiation electrodes.
3. The delay time of a particular detector is directly proportional to the diameter of the fireball. Tests performed in 7.5% methane mixtures resulted in an average detection time of 75 milliseconds and an average fireball diameter of 17 inches. In 10.0% mixtures, the average detection time decreased to 57 milliseconds, however,

TABLE 1 - Methane Ignition Test Results

% Methane	Detector	Average Fireball Diameter Growth Rate (in/sec)	Time to Sense (MS)	Diameter at Sense (inch)*	Coal Dust Enhancement near Spark
10.2	1	410	**	-	Yes
10.1	1	420	**	-	Yes
10.2	2	410	**	-	Yes
10.2	2	450	**	-	Yes
10.0	3	370	**	-	Yes
10.0	3	350	**	-	Yes
10.0	4	480	**	-	Yes
10.0	4	320	**	-	Yes
7.7	4	270	82	15.0-(E)-12	Yes
7.4	4	270	68	18.0-(E)-9	Yes
7.5	3	140	95	13.5-(S)-7	Yes
7.5	3	360	64	21.5-(E)-9	Yes
7.7	2	270	95	26.0-(E)-12	Yes
7.5	2	150	68	10.5-(E)-6	Yes
7.5	1	260	64	16.0-(E)-5	Yes
7.6	1	260	**	-	Yes
12.0	1	not observable	42	-	No
12.0	1	not observable	56	-	No
12.0	2	not observable	90	-	No
10.0	3	280	50	14.0	Yes
10.0	3	not observable	53	-	No
10.0	3	330	48	12.0	Yes
10.0	2	not observable	48	-	No
10.0	2	large delay between spark and development of fireball	89	20.0	Yes
10.0	2	not observable	53	-	No

*E refers to elliptical-shaped fireball; S to spherical-shaped. First number is diameter of major axis in the case of elliptical fireball. Second number is the location of the flame front (in inches) to the left of the spark in the horizontal direction at detection.

**Malfunction

NOTE: Detectors placed 17.5 feet from spark in all cases.

TABLE 2 - Detector Response Time Characteristics at 7.5% Methane

Sensor	Average Response Time	Average Elliptical Diameter (major axis)
1	64 ms	16.0"
2	81 ms	18.2"
3	79 ms	17.5"
4	75 ms	16.5"

Note: Sensors placed 17'6" from spark in all tests.

the average fireball diameter was about the same as the one observed at 7.5%. Near stoichiometric mixtures of methane in air exhibit faster flame speeds, but the fireball must develop to approximately the same size before it is detected.

4. Addition of coal dust fines near electrodes had no significant effect on detection time or fireball growth rates.

Distribution Pattern Tests Around a Simulated Cutter Head

A series of tests were conducted to determine the dispersion patterns and carrying power of Halon 1301 and Halon 1301/Purple K mixtures from the canister. Tests utilizing pure Halon incorporated 2.2 pound charges. Hybrid mixture tests consisted of 4.4 pounds of Halon and 2.2 pounds of Purple K.

Several conclusions were drawn as a result of high-speed film studies of these tests. They are as follows (the firing angle refers to the angle of the opening of the tube at the shaped charge with respect to the angle of the boom on the continuous mining machine):

1. No axial or outward dispersion was observed when canisters were fired in open atmosphere.
2. Dispersion pattern, looking side-on, is hemispherical in appearance with leading edge of extinguishant at firing angle.
3. Dispersion pattern of Halon is influenced by position of canister with respect to a horizontal plane i.e., if the canister is slightly tilted, non-uniform pattern will result with more extinguishant being discharged at the lower end of the tube. This problem can be eliminated by leveling the canisters before firing or adding more extinguishant to the tube.

4. The MSHA canister design resulted in rapid dispersion of extinguishant which was much faster than Fenwal sphere or cannon-type release devices. Typically, extinguishant is completely released from the canister in 15-20 milliseconds.
5. The stainless-steel support for the RDX charge was released at high velocity during detonation of the canisters. These fragments were razor-sharp and attained velocities as high as 200 ft/sec as timed on high-speed films. This could cause a safety problem and alternate charge support methods would need to be considered for a final design.
6. Use of Halon 1301 by itself resulted in marginal coverage around the backside of the drum.
7. Hybrid mixtures of Purple K and Halon 1301 in a 1:2 ratio resulted in much better coverage around the top and back of the drum when compared to Halon alone.
8. If the drum is placed near the roof, rebounding action results in some coverage by extinguishant out around the ends of the drum. Typical tests showed coverage around the outside of the drum in about 20 milliseconds.
9. Tests which rotated the firing angle of the canisters to 0° resulted in much faster coverage times and more extinguishant delivered around the drum. Extinguishant was observed at the back of the drum (approximately 3 feet from the leading edge of the canister) in 5 milliseconds.

10. With a 0° firing angle and a 2-inch offset below a tangent to the drum, outward dispersion of extinguishant was optimized.

Gallery Ignition Suppression Tests - Series I

Series I testing incorporated the use of the mock-up cutter head and the canister-release device. The drum was positioned so that its longitudinal axis was 19 inches from the face and 60 inches from the floor. This location simulated a cutting position near the roof. The spark was located 2 feet from the left end of the drum near the roof. A total of four canisters were used. Two were placed on the top support angle, end-to-end, and two were placed on the bottom support. The distance from the leading edge of the canisters to a point at the top of the drum was 2 feet, 6 inches. Two detectors were utilized and were located on the north and south walls of the gallery, 3 feet from the floor and 16 feet from the face. This location approximated the position that the headlamps would occupy on a continuous mining machine, a convenient location for detector installation in the field. The first test resulted in premature detonation of the canisters. In addition to this, structural damage to the support members occurred. A larger, 1/2-inch angle iron was installed and performed admirably throughout the remainder of the test program. Investigation into the premature detonation disclosed that a short had existed from one of the detonator leads to the steel plug which surrounded it. To prevent this from re-occurring, a blaster's galvanometer was used to check for this condition prior to switch closure to activate the firing circuit.

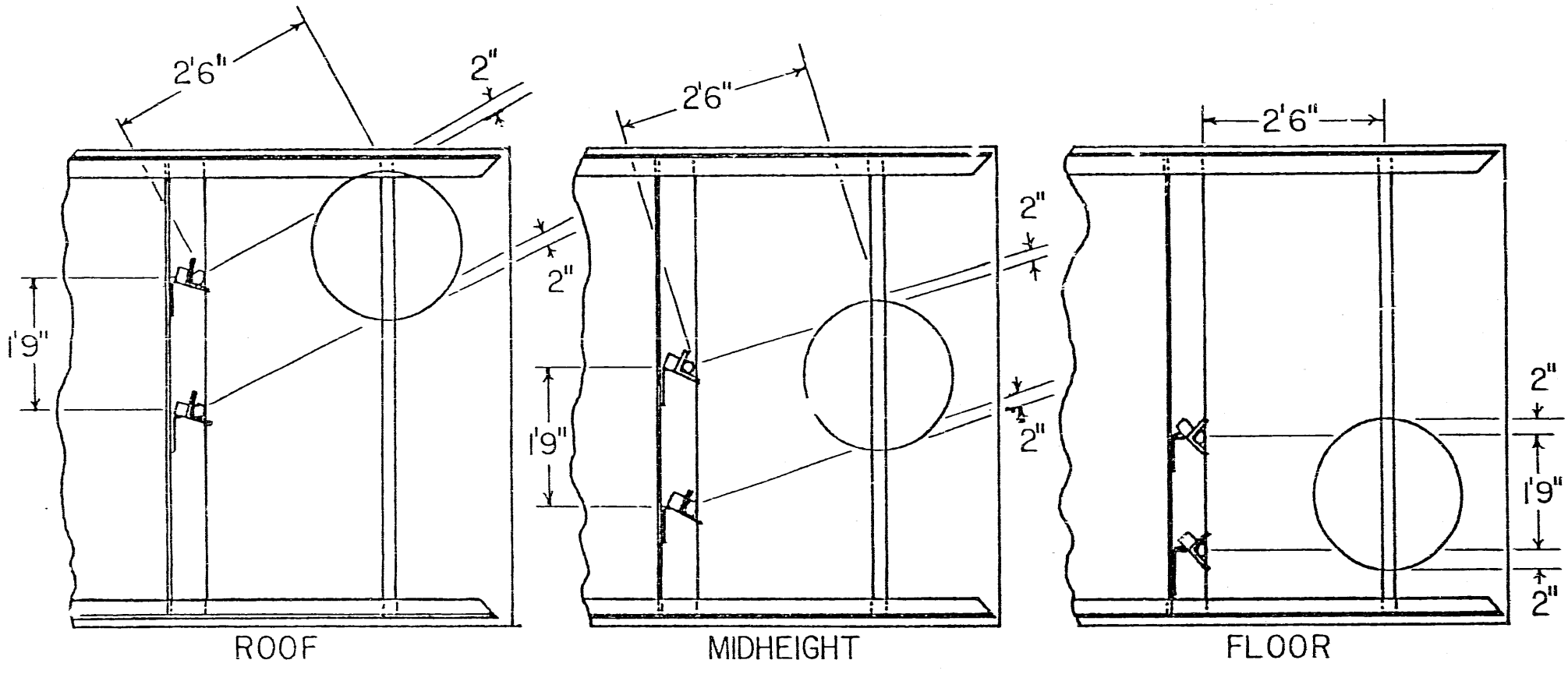

FIGURE 6 - Canister Locations at Three Drum Heights

TABLE 3 - Results of Ignition Suppression Tests in Simulated Mine Face Gas Zone - Series I

Test	%CH_4	Drum Position	Spark Location	Extinguishant Quantity Per Canister	Response Time (millisec)	Peak Noise Level (dB)	B Duration (millisec)	Suppression / No Suppression	Comments
1	9.4	Roof	2' inby left end of drum at roof	1 lb - PK 2.2 lb - 1301	-	-	-	Suppression	Leading edge of canister, 2' from top of drum.
2	9.6	Roof	do.	do.	-	-	-	do.	
3	9.6	Roof	2' inby left end of drum at face	do.	-	-	-	do.	
4	9.7	Roof	Centered behind drum at face	do.	60	-	-	do.	
5	9.6	Roof	Centered at roof	do.	21.2	-	-	do.	
6	9.6	Roof	Left end of drum near roof	do.	16.2	>153	-	do.	
7	9.5	Roof	Left end of drum near face	do.	172	>158	-	No Suppression	Confining curtain did not drop.
8	9.4	Roof	do.	do.	70	>166	-	Suppression	
9	9.6	Roof	Centered behind drum at face	0.5 lb - PK 2.2 lb - 1301	39	177	-	do.	
10	9.5	Roof	2' inby left end at face	do.	46.5	174	200 ms	No suppression	
11	9.4	Roof	Left end of drum at face	do.	37	175	188 ms	do.	
12	9.7	Midheight	Center of drum at face	1.0 lb - PK 2.2 lb - 1301	55	171	130 ms	Suppression	
13	9.8	Midheight	2' inby left end at face	do.	55	171.5	112 ms	do.	
14	9.5	Midheight	Left end of drum at face	do.	40	171	-	do.	
15	9.6	Floor	Under center of drum at floor	do.	Mlfnctn	168.5	-	-	Misfire
16	9.5	Floor	do.	do.	Mlfnctn	172	75 ms	do.	Confining curtain did not drop below level of drum.
17	9.5	Floor	Under left end of drum at floor	do.	72	171.5	-	Partial Suppression	Confining curtain did not drop below level of drum and upper right canister did not open--defect discovered in detonation.

Tests 7 and 17. Failure of the confining curtain to drop in Test 7, undoubtedly caused attenuation of the UV radiation from the developing fireball. Excessively long response time (172 ms) in this test confirmed the speculation. A non-suppression was categorized by appearance of flame out of the open end of the gallery and melting or scorching of the plastic confining curtain.

Attenuation of UV by the confining curtain was also experienced in Tests 16 and 17. Due to the physical arrangement of the fastening system, the curtain did not drop below the level of the drum. The fireball had to develop to unusually large diameters before the detectors would respond. Adequate suppression could not be achieved in Test 17 as a result of this.

Canisters containing mixtures of 2.2 pounds of Halon 1301 and 0.5 pounds of Purple K were only marginally successful for suppressing incipient ignitions. Two out of three attempts failed. Response times were consistent with those in tests utilizing 2.2 pounds of Halon 1301 and 1.0 pound of Purple K; thus, failure to suppress could be attributed to a lack of sufficient concentration of the hybrid mixtures.

One major problem with this system that still existed was the excessively high impulse noise levels that were generated. Although a reduction of nearly 30dβ was observed when compared to the earlier U.S.B.M. prototype canisters, the probability of permanent hearing damage was still very high at these levels. The average decibel level for these tests was 173dβ. There are no current Underground Coal Mine Standards for maximum levels of impulse noise exposure to compare this data with. Coles, Garenther, Hodge, and Rice[7/], however, studied the effect of human exposure to similar types of impulse noise. Figure 7 shows

7/ Coles, R. R., G. Garenther, D. Hodge, and C. Rice. "Criteria for Assessing Hearing Damage Risk from Impulse-Noise Exposure," US Army Technical Memorandum 13-67, pp 8-9, 1967.

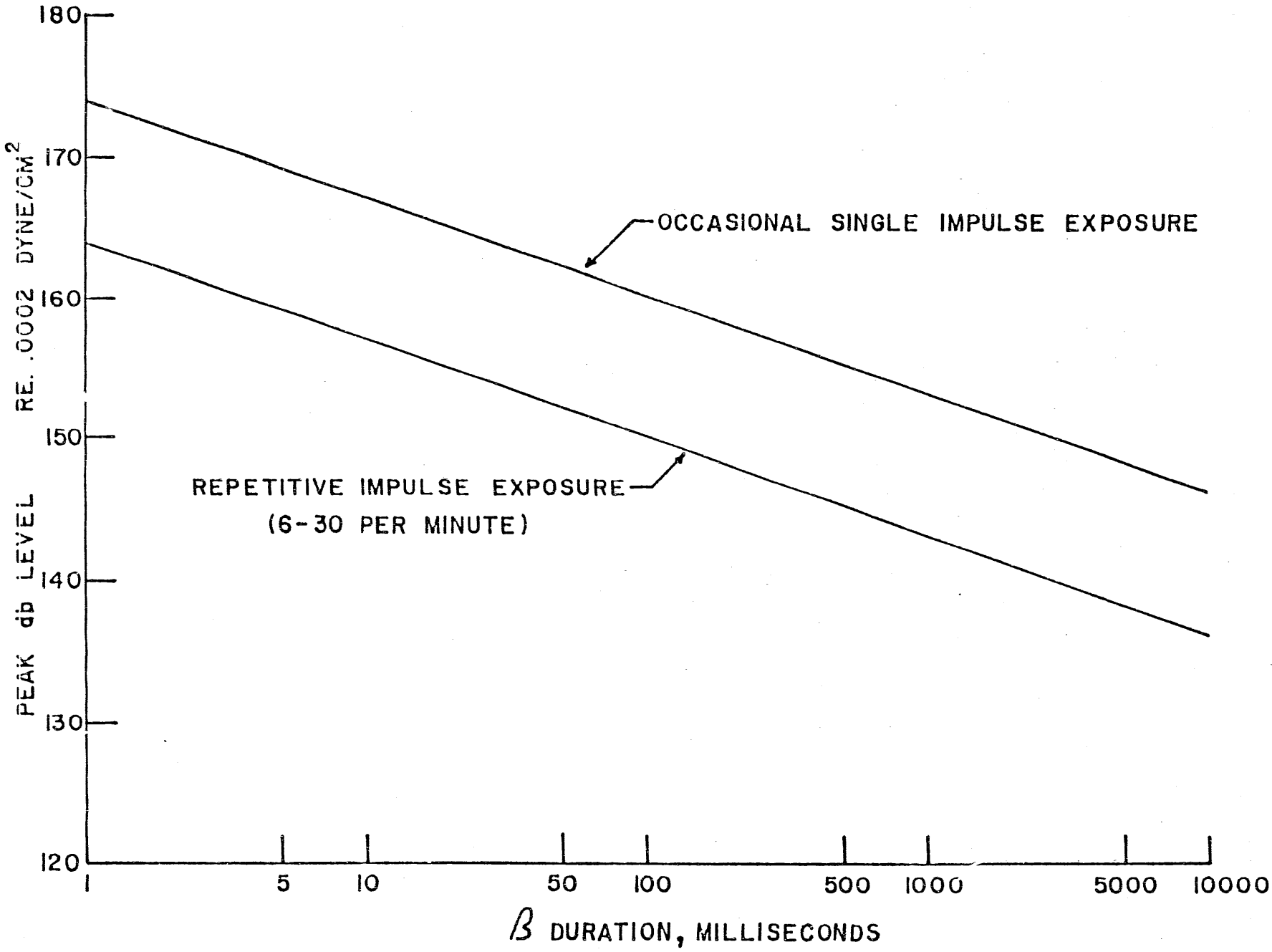

FIGURE 7 - Proposed Peak dβ Exposures Versus β Durations

their proposed peak dβ exposures versus β durations for single and repetitive exposures. The β duration is defined as the total time that the envelope of pressure fluctuations (positive and negative) is within 20dβ of the peak level. Average β duration for gallery suppression tests were on the order of 100 milliseconds. The noise levels, generated in the gallery, were in excess of the proposed peak level exposures dictated by this study.

Supplemental tests conducted in the Bruceton Experimental Mine on impulse noise generated from rupturing canisters were in close agreement with gallery test results indicating that these same high levels would exist in an underground environment.

In summary, there were three major problems associated with this system that had to be resolved: (1) excessively high noise levels generated from the rupturing canisters; (2) discharge of metallic fragments from the canister at high speeds; (3) the need to protect the canisters from the physical abuse they would be exposed to in underground mining. An engineering study was initiated which addressed itself to these problems.

Efforts to Reduce Noise

Three primary noise abating techniques were investigated in an effort to reduce high impulse noise from rupturing canisters. The first technique involved the use of time delay detonators to rupture the canisters. A time delay firing circuit was constructed which electronically controlled DC current pulses to the detonators within one millisecond. The purpose of this experiment was to determine if a negative reinforcement of the sound waves between

two canisters could be achieved by delaying detonation times. Sound levels and β durations were measured for a number of different delay times and are listed in Table 4. Oscillograph traces indicated that the canister firing times coincided with pre-set delays from the solid-state circuitry. No significant reduction in sound pressure was observed as delays were introduced into the detonators. In addition to this, Tests 6 and 7 in Table 4 indicate that the reproducibility between two sets of identical programmed delays was very poor.

The second technique involved measures to reduce the noise by alteration of the inside of the canister. More extinguishant was added in hope that the additional material would serve to absorb energy from the shock wave of the explosive. The noise level was actually found to increase slightly with increasing extinguishant concentration (Figure 8). Three alternative methods for rupturing the canisters were also investigated (Figure 9): (1) The blade-type involved a cord of mild detonating fuse (MDF) placed in the opening of a small steel channel. The contact point between the channel and the inside wall of the tube was sharpened. When the MDF was detonated, the energy developed would force the blade into the wall of the canister, cutting it open. (2) The stressed thickwall canister was made of Schedule 40 steel and contained a charge of MDF centrally located within the tube. The outside wall of the tube was scored to a depth of 0.060 inch. Detonation of the MDF would overpressurize the tube, forcing the tube to open at its weakest point (along the score line). (3) The ribbon-score/center-burster was an extension of Method 2. The

TABLE 4 - Results of Time Delay Blasting Circuit Tests with Ensign-Bickford Canisters

Test	Noise Source	Delay (millisecond)	Peak Sound Level (dβ)*	β Duration (millisecond)
1	(2) #6 Detonators	0	159	-
2	(2) #6 Detonators	0	159	>160
3	(2) Canisters	3	>172	140
4	(2) Canisters	5	>178	28
5	(2) Canisters	7	181.5	66
6	(2) Canisters	10	167.5	-
7	(2) Canisters	10	186	-
8	(2) Canisters	12	185	-
9	(2) Canisters	14	185	53
10	(2) Canisters	20	178	52

*Pressure transducer located 15 feet from source of noise in gallery.

Note: Canisters filled with 1.0 lb. PK/2.2 lb. Halon 1301.

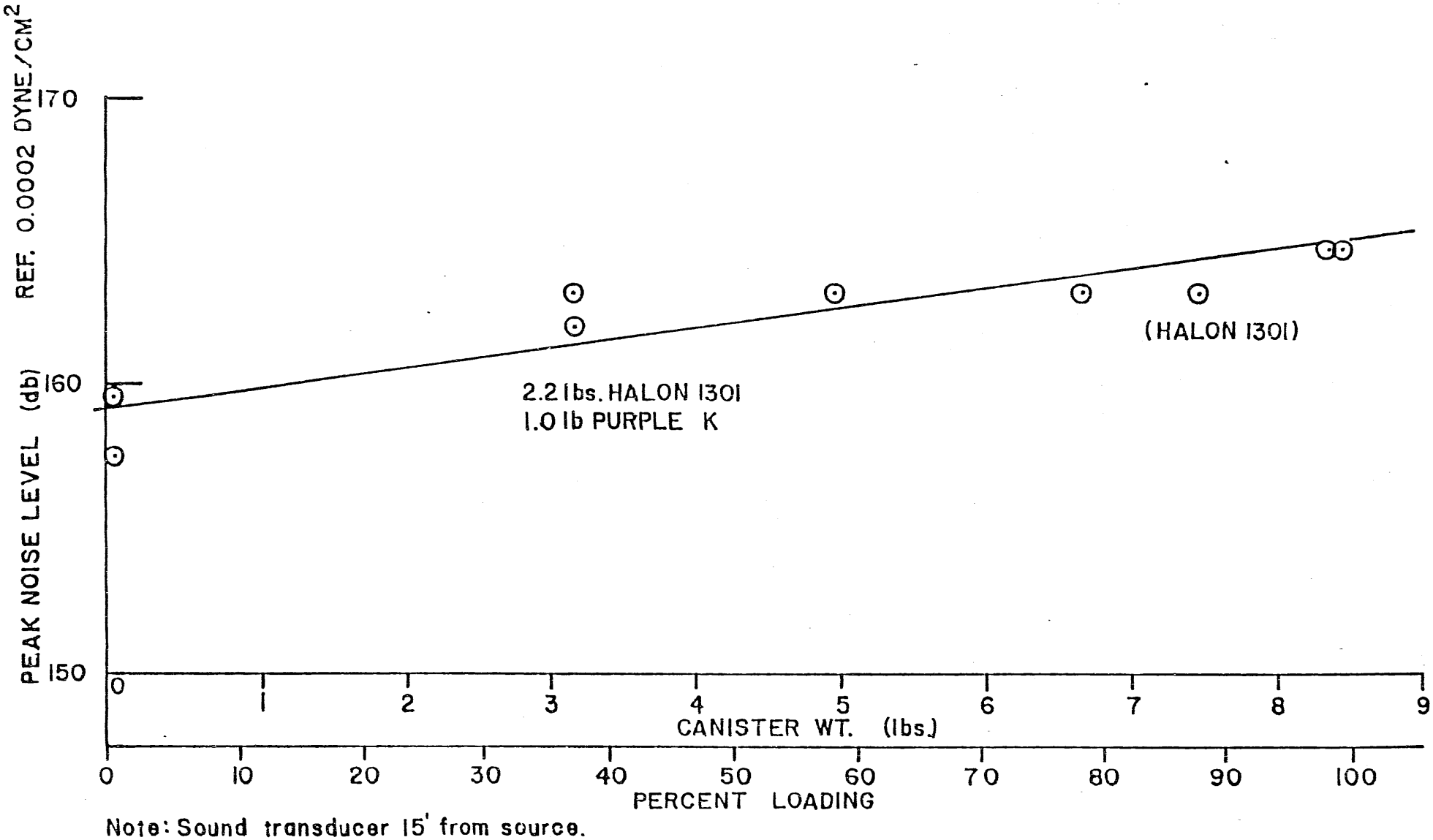

FIGURE 8 - Peak Noise Levels Versus Extinguishant Quantity

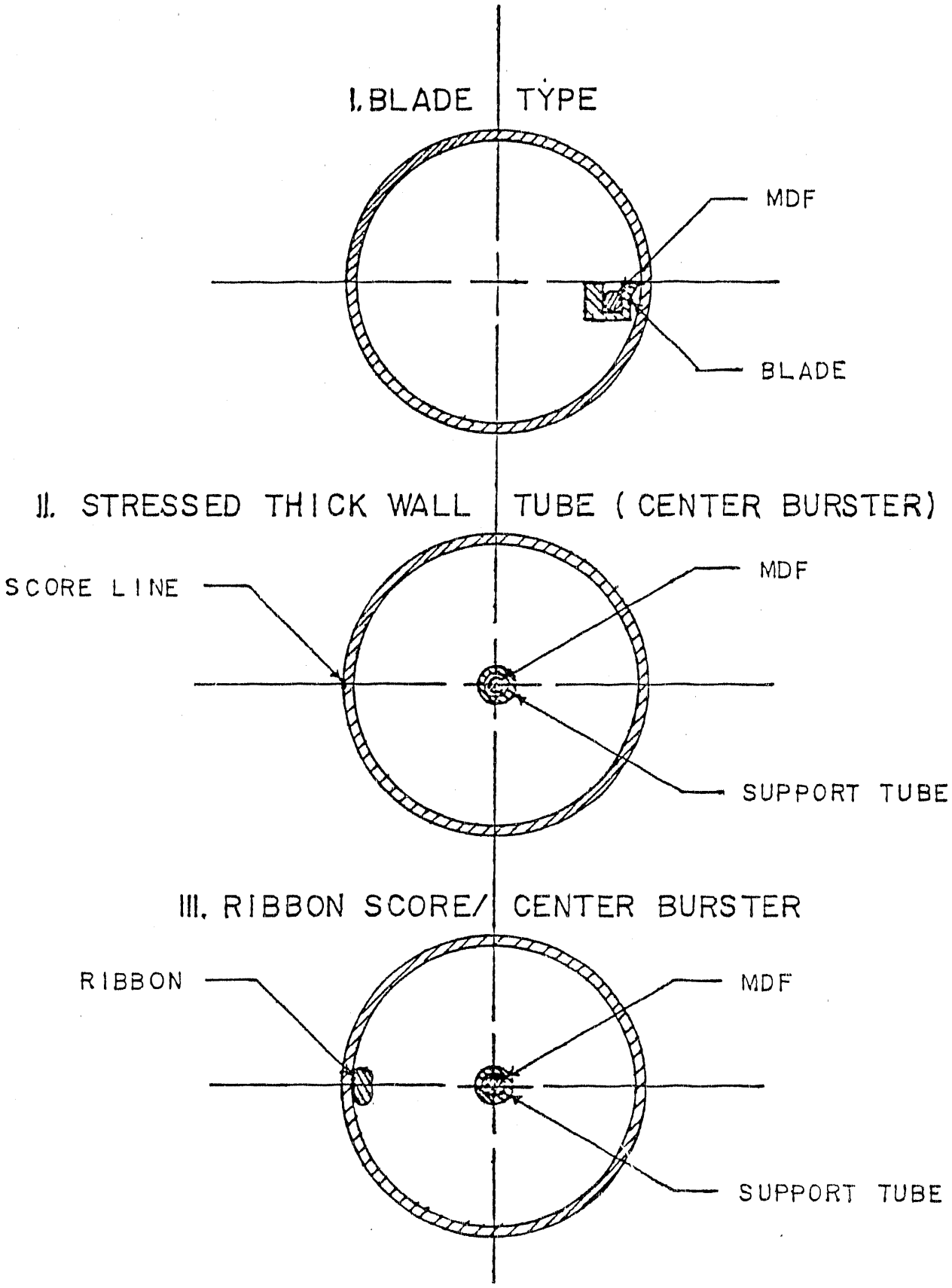

FIGURE 9 - Experimental Canister Rupturing Regimes

detonator would initiate a small explosive charge or ribbon which weakened the inside wall of the tube. A transition explosive transferred the detonation to the MDF which overpressurized the tube and ruptured it at the area weakened by the ribbon. None of these three methods was successful in reducing the high impulse noise. The conclusion of this study was that the rapid mass release rate of extinguishant was responsible for the high impulse noise level. Efforts to reduce noise were directed to a third technique which treated the problem from outside of the canister.

The third technique involved the development of hardware to contain the canister. Preliminary testing in this area indicated that enclosing the canister inside of a larger vessel would reduce the noise levels generated when compared to an unconfined canister. The problem was to design a confining vessel that would reduce the noise to an acceptable level and, at the same time, function to suppress an incipient ignition. After extensive testing and design changes, a baffled muffler arrangement was developed (Figure 10). The canisters were slid inside of the muffler which utilized a 4-inch, extra-heavy pipe as its outer shell. End caps were screwed in place to protect the ends of the canister. Upon rupturing of the canister, the extinguishant had to make two passes through the inner and outer baffles before it could exit through the 1/2-inch holes in the outer shell. Baffle, hole spacing and size were varied until a flat dispersion profile of extinguishant was obtained. Since the velocity of extinguishant was reduced by nearly 60 percent, it remained to be seen if this system would be successful in actual gallery ignition suppression tests. The muffler also solved the problem of the discharge of metallic fragments and

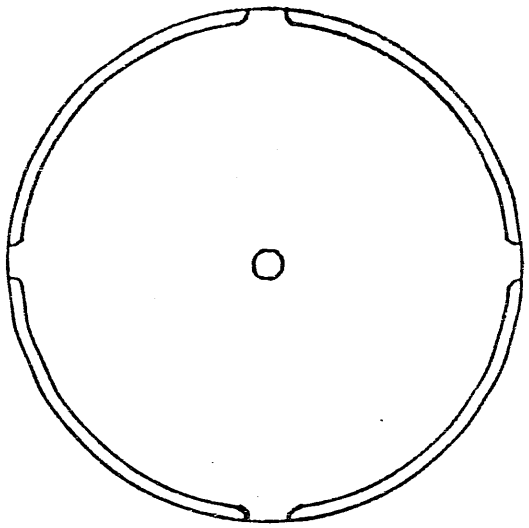

End Cap
(side view)

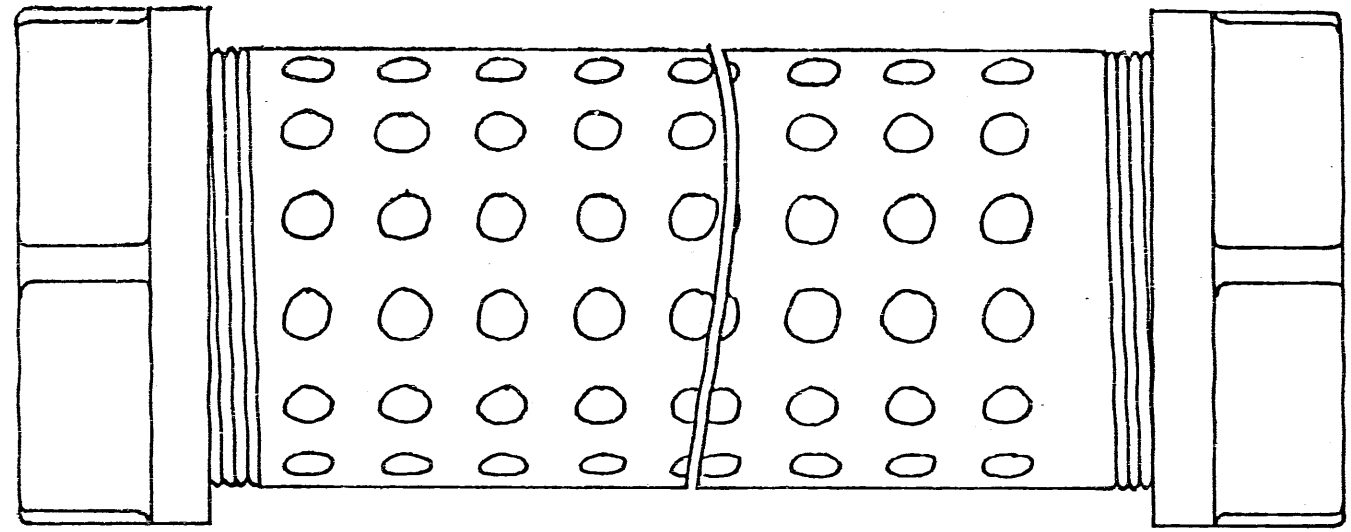

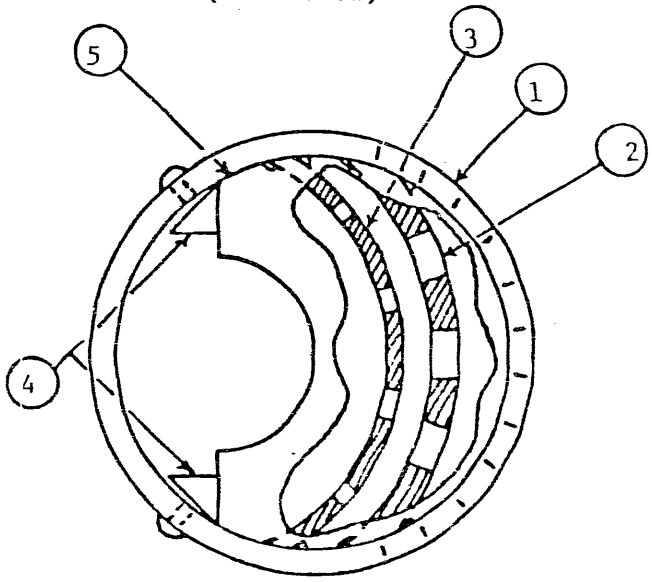

End of tube with cutaway view of end plate

1. Outer tube, 4" Schedule 40 Ell Pipe, 6 rows of 1/2" holes on 1" centers.
2. Top baffle, section of 5" Schedule 40 Pipe, 3 rows of 1/2" holes on 1" centers.
3. Bottom baffle, section of 4" 11 gage pipe, 4 rows of 1/4" holes on 1" centers.
4. Guide bars
5. End plate, 3/8" cold rolled steel

FIGURE 10 - MSHA Baffled Muffler Assembly

would protect the canister against roof falls and other potential damage incurred during the normal rigors of mining.

Gallery Ignition Suppression Tests - Series II

Limited large-scale gallery ignition suppression tests were performed on the baffled muffler system (Figure 11). These tests employed two canisters containing mufflers on the top support and two on the bottom. The drum was located near the roof and ignitions were focused to an area 2 feet from the left end of the drum. Table 5 lists the results of these tests. In three of the tests, the canisters were filled to near capacity with a 1.5:1 mixture of Purple K and Halon 1301. A fourth test utilized 7 pounds of Halon in each canister. Program limitations prohibited the establishment of minimum extinguishant concentrations. It was felt also that if the system was employed on an actual mining machine, the canisters would have to be filled with extinguishant or uneven distribution could occur when mining on a slope. The 1.5:1 ratio was based on laboratory tests, conducted in the final phase of the program, which indicated that this ratio provided the most intimate mixing of liquid and powder.

Successful suppression was achieved in all four tests. The average peak impulse noise level was 156dβ, a reduction of 17dβ over unconfined canisters in preliminary tests. β durations were essentially the same as those observed in the Series I tests.

CONCLUSIONS AND RECOMMENDATIONS

The canister-release device enclosed in a baffled muffler appears to be a feasible approach to ignition suppression. The system offers the advantage of

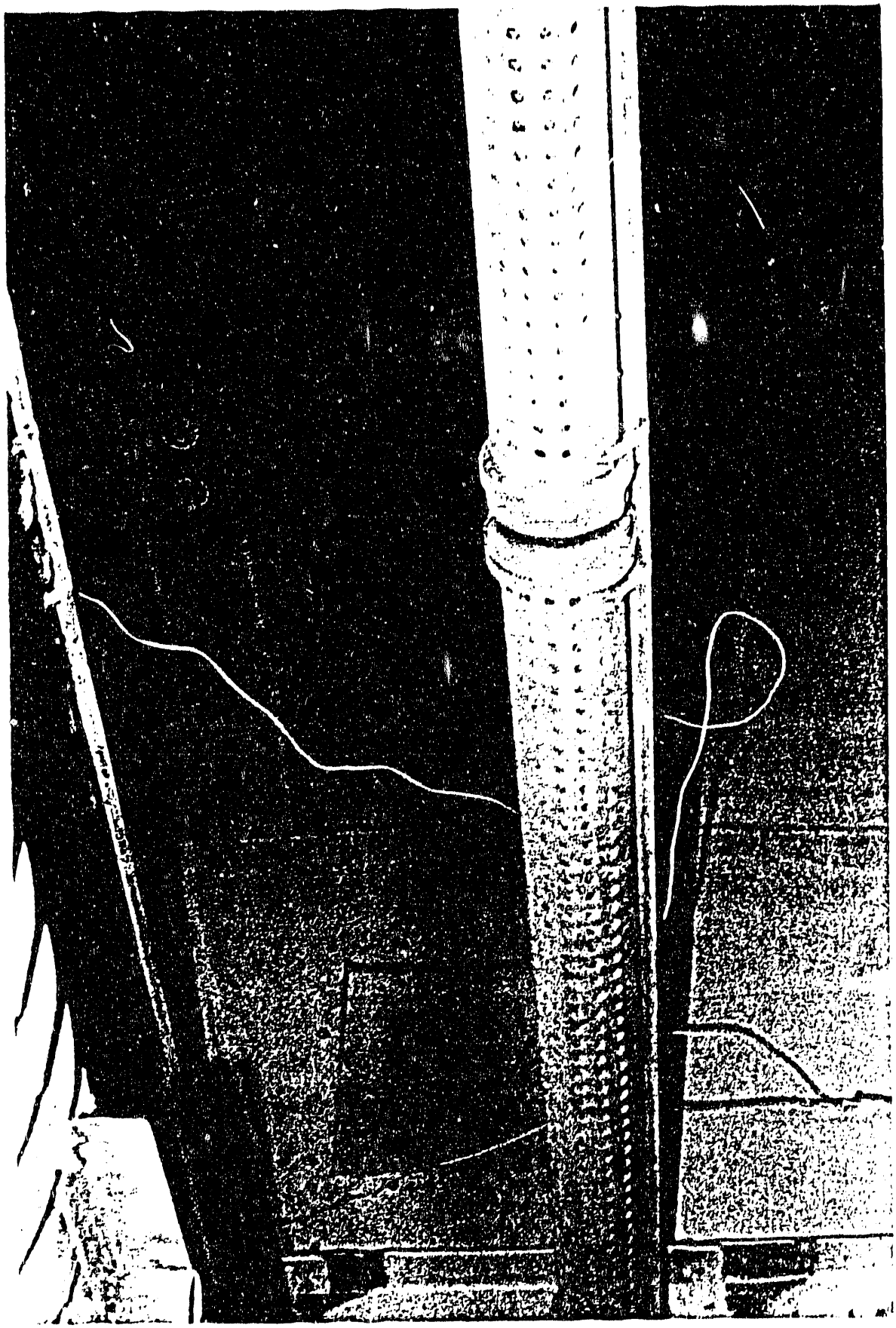

TABLE 5 - Test Results: Ignition Suppression Tests with Muffled Canisters - Series II

Test	Spark Location	Extinguishant	Delay (millisec)	Peak Sound Level (dB)	B Duration (millisec)	No Suppres. Suppression
18	1/4 LR	4.2# PK 2.8# 1301	68	156	84	Suppression
19	1/4 LF	4.2# PK 2.8# 1301	93	154	157	Suppression
20	1/4 LF	4.2# PK 2.8# 1301	106	158	78	Suppression
21	1/4 LF	7.0# 1301	93	156	157	Suppression

Note: 1/4 LR means 2 foot from left end of drum near roof.
1/4 LF means left end of drum near the face.

much broader coverage and faster release of extinguishant when compared to the cannon or spherical-type release devices. The canister/muffler concept would require fewer devices for comparable coverage when compared to the other devices previously tested. Systems incorporating canister/muffler hardware could be retrofitted onto existing machinery or re-designed into new cutting equipment with a minimum of additional space requirements.

The 156dβ average (average β duration was 119ms) peak impulse noise level measured in the Second Series of tests falls within the guidelines recommended by Coles[8/]. These observed levels may well be lowered when the system is placed on a continuous mining machine. The large mass of the machine would serve to absorb some of the sound waves generated when the system functions. Addition of the muffler also affords protection of the canister against roof falls and other abuse and serves to contain the metallic fragments expelled from the canister upon detonation of the linear-shaped charge.

A field test of the system on an actual continuous mining machine is necessary before a final evaluation can be made. Suppression hardware would need to be fabricated for specific pieces of mining equipment. The main design variables would be the length of the cutting drum and cutter head geometry. Two important parameters which need to be investigated are the impulse noise generated in the actual mining environment and the effect of heavy coal dust clouds on the operation of the system. Other factors warranting consideration are the durability of the ultraviolet detection package and maintenance requirements under normal operating conditions.

8/ Same as Footnote 7.

Additional testing would also be necessary to establish the most effective extinguishant systems for successful suppression.

END

DATE FILMED

02 / 11 / 91