conf. 790327--55

Paper presented at the 1979 Particle Accelerator Conference, San Francisco, CA, March 12-14, 1979 BNL 25800

ISABELLE INSERTION QUADRUPOLES*

J. Kaugerts, I. Polk, W. Sampson, and P.F. Dahl†

Abstract

Beam focussing and control at the beam intersection regions of ISABELLE is accomplished by a number of superconducting insertion quadrupoles. These magnets differ from the standard ISABELLE quadrupoles in various ways. In particular, the requirements of limited space near the intersections and aperture for beam extraction impose constraints on their configuration. To achieve optimum beam focussing and provide tuning flexibility calls for stronger quadrupole trim windings than those in the standard quadrupoles. The magnetic and mechanical design of the insertion quadrupoles and their associated correction and steering windings to accomplish the above tasks is presented.

Introduction

The present design for the magnet lattice in the vicinity of the beam intersection region is shown in Fig. 1 for the "4 o'clock" insertion which also serves as the beam injection and ejection region. The magnets have been drawn to scale in the longitudinal direction (along the beam). The beam injection line for one of the rings is also shown. Magnets for beam ejection are not shown since several beam ejection methods are still under consideration at this time.

3-405-79

Fig. 1. ISABELLE Intersection Region Showing Insertion Quadrupoles Q_1-Q_7

These appear to be compatible with present magnet designs. Quadrupoles Q_1, Q_2, Q_4, Q_5, Q_6, and Q_7 have been designated as insertion quadrupoles since each of them can be individually trimmed to adjust the beam properties at an intersection region. By contrast, the standard lattice focussing and defocussing quadrupoles have their trim windings separately in series and are not individually adjustable. The main windings of all dipoles and quadrupoles in a ring are powered in series to assure that the magnets track each other.

Table I gives the important magnetic parameters of the insertion quadrupoles. Q_5, Q_6, and Q_7 are the same as the standard lattice quadrupoles except for their correction windings. Because of this let us consider only the design of Q_1 and Q_2 which are the same (except for an additional a_1 winding in Q_1) and which do present special design constraints.

Q_1 Magnetic Design

The types of windings and their strengths have already been given in Table I. The reasons for these corrections have been given elsewhere.[1] Figure 2 shows a cross section of the main winding, correction windings, and cooling passages. Standardization of insertion quadrupole and regular lattice quadrupole winding parameters has been utilized whenever possible to facilitate magnet construction. In particular, all magnet windings use the same 0.0305 cm diameter superconducting composite strand.[2]

3-404-79

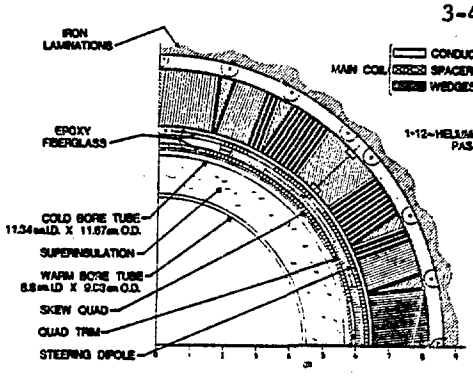

Fig. 2. Q_1 Insertion Quadrupole Quadrant Showing Main Winding, Correction Windings and Coolant Passages

Table I. Insertion Quadrupole Parameters

Magnet	Gradient(kG/cm)	Magnetic Length(cm)	Correction Provided(cm^{-n})	Correction Current (amps)	Correction Winding
Q_1	6.01	214	$a_o = 1.6 \times 10^{-2}$	100	Skew Steering Dipole
			$a_1 = 2.4 \times 10^{-3}$	100	Skew Quadrupole
			$b_1 = 8.4 \times 10^{-3}$	300	Trim Quadrupole
Q_2	6.01	214	$b_o = 1.6 \times 10^{-2}$	100	Steering Dipole
			$b_1 = 8.4 \times 10^{-3}$	300	Trim Quadrupole
Q_4	6.01	109	$a_o = 0.8 \times 10^{-2}$	50	Skew Steering Dipole
			$b_1 = 8.4 \times 10^{-3}$	300	Trim Quadrupole
Q_5, Q_7	6.01	164	$b_o = 0.8 \times 10^{-2}$	50	Steering Dipole
			$b_1 = 8.4 \times 10^{-3}$	300	Trim Quadrupole
Q_6	6.01	164	$a_o = 0.8 \times 10^{-2}$	50	Skew Steering Dipole
			$b_1 = 8.4 \times 10^{-3}$	300	Trim Quadrupole

$\Delta B_v = B_o(b_o + b_1x + b_2x^2 + \ldots) \sim$ vertical field

$\Delta B_h = B_o(a_o + a_1x + a_2x^2 + \ldots) \sim$ horizontal field

$B_o = 50$ kG; $I_{main} = 4167$ amps

*Work performed under the auspices of the Department of Energy

†Brookhaven National Laboratory, Upton, NY 11973

A. Main Quadrupole Winding

This winding is the same as that of the regular lattice quadrupoles[3] except for length. Tests have been made[4] with a quadrupole using a slightly smaller diameter earlier version of this winding. The magnet reached a gradient of 7.1 kG/cm at 4.5°K in pool boiling helium.

For the present 50 kG ISABELLE design the dipole saturation has been calculated to be about 12½%, giving rise to a difference between dipole and quadrupole saturation for the standard 12.3 cm thick iron lamination of 7½%. In order to minimize this difference and so reduce the amount of quadrupole trim required to make the dipoles and quadrupoles track once iron saturation sets in, the quadrupole iron core thickness for Q_1 and Q_2 has been reduced to 4.5 cm. This iron thickness has been calculated to give the best overall match between dipole and quadrupole saturation, reducing the difference to about 1%. The leakage field from Q_1 at the location of the other beam has been calculated to be around 20 G. Shielding around the beam tube can reduce this field if this is required.

B. Quadrupole Trim Winding

As with the regular lattice quadrupole correction windings, the design philosophy for the insertion quadrupole correction windings has been to operate them at conservative current values. This is both in the interest of increased reliability and also because these windings are not as rigidly supported as the main windings and hence may be more susceptible to quenching due to mechanical motion.

In order to accommodate the larger trim requirements, the conductor design is different from that of the standard lattice quadrupole trim winding. It consists of an 11 strand AgSn solder impregnated braid, spirally wrapped with 0.006 cm thick epoxy impregnated fiberglass tape to give an overall size of 0.081 cm x 0.254 cm. When both the main and trim windings are at their maximum design current values, the maximum magnetic field at the quadrupole trim winding in the magnet straight section is about 39 kG. At the maximum anticipated temperature of 4°K this results in an operating current that is only 39% of the short sample critical current for these conditions. (Meanwhile, the main winding is operating at 48 kG and about 70% of short sample critical current.) This gives a 7% trim capability for the winding, allowing for saturation effects.

C. Skew Quadrupole and Steering Dipole Windings

Both of these windings utilize a 7 strand AgSn solder impregnated cable completely covered with 0.013 cm thick epoxy fiberglass tape, giving an overall size of 0.109 cm. This is the same conductor used for the regular lattice quadrupoles correction windings. At their design currents these windings are operating at only about 20% of their critical current.

Q_1 Mechanical Design

The quadrupoles Q_1 and Q_2 have been staggered (see Fig. 1) because of the space restrictions due to the small (11.188 milliradians) crossing angle at the beam intersection region. Figure 3 shows a cross section of the assembled magnet inside its cryostat and the location of the beam tube for the other ring.

This cryostat differs from the standard ISABELLE design[5]:

1. The magnet assembly has been made narrower in order to minimize the angle that beams from the intersection region must be bent to clear the magnet. The possible addition of an electron ring option in the future would also benefit from having a radially narrow Q_1 to reduce the amount of synchrotron radiation produced as the electron beam is bent from its location under Q_1 to intersect with the proton beam.

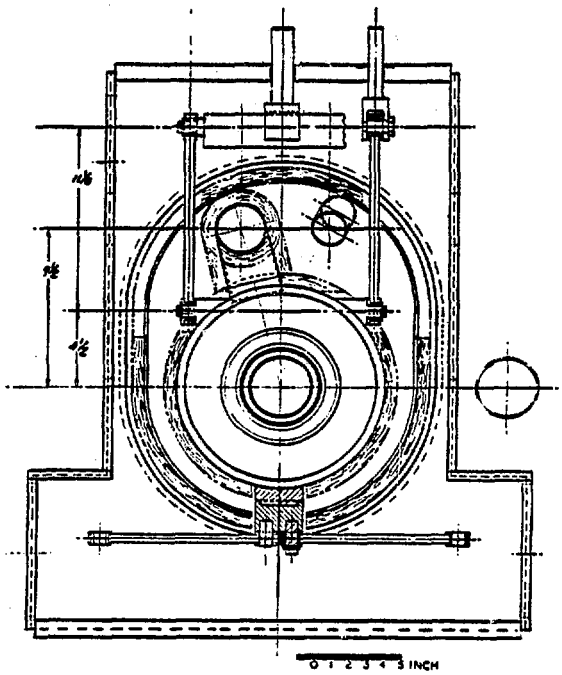

Fig. 3. Q_1 Mechanical Design

2. The magnet is supported by low heat leak fiberglass straps[6] as opposed to stainless steel roller chains of the earlier design.[5]

3. In order to make the magnet narrower in the horizontal plane, the cryogenic lines have been located above the magnet (see Fig. 3). The larger line carries helium for direct magnet cooling as well as the current leads for all the magnet windings. The smaller line carries helium for the 55°K intermediate heat shield.

The basic construction technique for the main winding has been described earlier.[7] The correction windings will be wound flat and then mounted on the cold bore tube as is done for the standard lattice quadrupoles.

Magnet cooling is provided by a 170 g/s gaseous helium flow that enters at the middle of a magnet sextant at 5 Atm and 2.6° K and leaves after Q_1 at 4.8 Atm and 3.8° K. Most of the coolend bypasses Q_1 through the line carrying magnet leads in order to minimize the pressure drop across the magnet while carrying sufficient helium to cool the chain of 44 magnets.

Outside of the main winding the coolant passages (see Fig. 2) are slots (1-8) in the 2.54 cm wide epoxy fiberglass bands, spaced every 2.54 cm. The space between the inside of the main winding and the steering dipole is composed of 2.54 cm wide, 0.127 cm thick epoxy fiberglass bands, spaced every 2.54 cm. Coolant for

this region flows through passage 9. The inner windings are cooled by helium flow through passages 10-12. These passages have the pattern shown below to provide support and cooling of the winding above them as well as edge cooling of the windings at the radial location of the cooling passage.

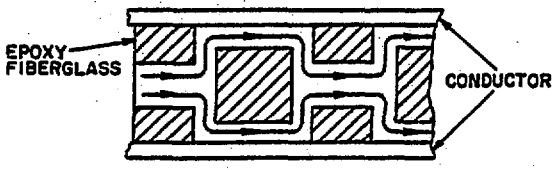

Fig. 4. Helium Cooling Passages 10-12

Computer calculations for this coolant flow geometry using typical heat loads during magnet ramping give a pressure drop of 0.002 Atm and temperature rise from 3.8° K to 4.0° K for a flow of 20 g/s. This is within design specifications.

Larger Aperture Q_1

Although a final design for beam extraction has not been chosen yet, one possible design calls for a larger aperture in Q_1 in order to prevent beam loss during fast beam extraction. The required aperture of 13.0 cm can be attained by scaling up the present design to a 14.9 cm main winding inner diameter (from 13.09 cm) and leaving out the inner warm bore tube for the Q_1 and Q_2 in the ejection region. By increasing the number of turns of the main winding sufficiently, one can maintain 99% of the standard gradient. The present cryostat is large enough to accommodate this increase in size.

References

1. G. Parzen, "Correction Coils in ISABELLE," these proceedings.
2. A.D. McInturff, P.F. Dahl, R. Damm, C. Lasky, K. Robins and W. Sampson, "Full-Scale ISABELLE Dipoles," IEEE Trans. Nucl. Sci., NS-22, No.3, 1133-1136 (1975).
3. P.F. Dahl, private communication.
4. W.B. Sampson, K.E. Robins, S. Kiss, P.F. Dahl and A.D. McInturff, "ISABELLE Quadrupoles," IEEE Trans. Nucl. Sci., NS-24, No. 3, 1296-1298 (1977).
5. D. Kassner, "Mechanical Design of ISABELLE Magnet Cryostats," IEEE Trans. Nucl. Sci., NS-24, No. 3 1260-1262 (1977).
6. V. Buchanan, D. Kassner and I. Polk, "The ISABELLE Magnet Support and Adjustment System," these proceedings.
7. F.F. Dahl, R. Damm, D.D. Jacobus, C. Lasky, A.D. McInturff, G. Morgan, G. Parzen, W.B. Sampson, "Superconducting Magnet Models for ISABELLE," IEEE Trans. Nucl. Sci., NS-20, No. 3, 668-672 (1973).