348
8-17-79

Ag. 3009

DOE/NASA CONTRACTOR REPORT

DOE/NASA CR-161235

SOLAR HEATING AND HOT WATER SYSTEM INSTALLED AT CHERRY HILL, NEW JERSEY

Prepared from documents furnished by

Garden State Racing Association
Liquidation Trust, Bank of New Jersey Trustee

MASTER

Under DOE Contract EG-77-A-01-4086

Monitored by the

National Aeronautics and Space Administration
George C. Marshall Space Flight Center, Alabama 35812

For the U. S. Department of Energy

U.S. Department of Energy

DISTRIBUTION OF THIS DOCUMENT IS UNLIMITED

Solar Energy

DISCLAIMER

This report was prepared as an account of work sponsored by an agency of the United States Government. Neither the United States Government nor any agency Thereof, nor any of their employees, makes any warranty, express or implied, or assumes any legal liability or responsibility for the accuracy, completeness, or usefulness of any information, apparatus, product, or process disclosed, or represents that its use would not infringe privately owned rights. Reference herein to any specific commercial product, process, or service by trade name, trademark, manufacturer, or otherwise does not necessarily constitute or imply its endorsement, recommendation, or favoring by the United States Government or any agency thereof. The views and opinions of authors expressed herein do not necessarily state or reflect those of the United States Government or any agency thereof.

DISCLAIMER

Portions of this document may be illegible in electronic image products. Images are produced from the best available original document.

NOTICE

This report was prepared to document work sponsored by the United States Government. Neither the United States nor its agents the United States Department of Energy, the United States National Aeronautics and Space Administration, nor any federal employees, nor any of their contractors, subcontractors or their employees, make any warranty, express or implied, or assume any legal liability or responsibility for the accuracy, completeness, or usefulness of any information, apparatus, product or process disclosed, or represent that its use would not infringe privately owned rights.

TECHNICAL REPORT STANDARD TITLE PAGE

1. REPORT NO. DOE/NASA CR-161235	2. GOVERNMENT ACCESSION NO.	3. RECIPIENT'S CATALOG NO.
4. TITLE AND SUBTITLE Solar Heating and Hot Water System Installed at Cherry Hill, New Jersey		5. REPORT DATE May 16, 1979
		6. PERFORMING ORGANIZATION CODE
7. AUTHOR(S)		8. PERFORMING ORGANIZATION REPORT #
9. PERFORMING ORGANIZATION NAME AND ADDRESS Garden State Racing Association Liquidation Trust, The Bank of New Jersey, Trustee		10. WORK UNIT NO.
		11. CONTRACT OR GRANT NO. DOE EG-77-A-01-4086
12. SPONSORING AGENCY NAME AND ADDRESS National Aeronautics and Space Administration Washington, D. C. 20546		13. TYPE OF REPORT & PERIOD COVERED Contractor Report
		14. SPONSORING AGENCY CODE

15. SUPPLEMENTARY NOTES

This work was done under the technical management of Mr. Dan Xenofos, George C. Marshall Space Flight Center, Alabama.

16. ABSTRACT

This final report describes in detail, the solar heating and hot water system installed in existing buildings at the Cherry Hill Inn in Cherry Hill, New Jersey.

Costs for the system were shared by Garden State Racing Association Liquidation Trust, The Bank of New Jersey, Trustee as the owner/operator of the Cherry Hill Inn and the U. S. Department of Energy. This project is part of the National Solar Heating and Cooling Demonstration Program. The designer and construction manager was Colm Engineering.

The system went into operation November 8, 1978 and is expected to furnish 31.5% of the overall heating load and 29.8% of the hot water load. The collectors are General Electric Company liquid evacuated tube type. The storage system is an above ground insulated steel water tank with a capacity of 7,500 gallons.

17. KEY WORDS

NOTICE

This report was prepared as an account of work sponsored by the United States Government. Neither the United States nor the United States Department of Energy, nor any of their employees, nor any of their contractors, subcontractors, or their employees, makes any warranty, express or implied, or assumes any legal liability or responsibility for the accuracy, completeness or usefulness of any information, apparatus, product or process disclosed, or represents that its use would not infringe privately owned rights.

18. DISTRIBUTION STATEMENT UC-59a

Unclassified-Unlimited

WILLIAM A. BROOKSBANK, JR.
Mgr, Solar Energy Applications Projects

19. SECURITY CLASSIF. (of this report)	20. SECURITY CLASSIF. (of this page)	21. NO. OF PAGES	22. PRICE
Unclassified	Unclassified	212	NTIS

MSFC - Form 3292 (Rev. December 1972)

For sale by National Technical Information Service, Springfield, Virginia 22161

DISTRIBUTION OF THIS DOCUMENT IS UNLIMITED

THIS PAGE

WAS INTENTIONALLY

LEFT BLANK

TABLE OF CONTENTS

Introduction	1
Interim Performance Criteria Certification	2
Operational Certification Date	3
Summary Of Project Information	4
Assembly/Checkout Of Cherry Hill Solar System	5
Acceptance Test Plan Results	23
Cherry Hill Inn Operating And Maintenance Manual	24
Updated System Performance Data Revised From Original Calculations	47
Major Problems Encountered And Recommended Solutions	48
Appendix "A" Manufacturers Literature	51
Appendix "B" Design Drawings (As-built)	203
Appendix "C" Photographs	219

INTRODUCTION

The Cherry Hill Inn, Cherry Hill, New Jersey is a combination country inn, hotel and convention center with an international reputation. The Inn has been in operation more than 24 years and during this time span, over 27,000,000 people from all over the world have been guests, attended meetings, functions, or just visited for a repast and enjoyed the Inn's hospitality.

Over the years, Management has endeavored to maintain its facilty in outstanding condition. At the present time, the Inn is in the midst of a complete renovation program. This program includes refurbishment of all guest rooms, the addition of more athletic and health facilities, and a revitalization of the energy consuming systems including HVAC, hot water services and electrical systems.

As a result of being accepted as a participant in the PON 2 Solar Demonstration Program, the Inn has installed a 331 panel array to produce more then 30 % of the required heating and hot water energy.

INTERIM PERFORMANCE CRITERIA

CERTIFICATION

Agreement No. EG-77-A-01-4086

Project - Cherry Hill Inn

Participant - Garden State Racing Association
Liquidation Trust, Bank of New Jersey Trustee

System location - Cherry Hill, New Jersey

System type - Space Heating & Hot Water

I certify that this solar system complies with IPC Document No. 98M10001.

Revision - Basic

Date - February 25, 1975

Certified by William P. Davis
William P. Davis
Authorized Representative
Date - November 8, 1978

Cherry Hill INN
EXECUTIVE OFFICES

P.O. BOX 406
CHERRY HILL, NEW JERSEY 08002

(609) 662-7200
(215) 922-6720
(212) 226-2969

November 16, 1978

Mr. Dan Xenofos
Government Project Manager
Code FA33
Geo. C. Marshall Space Flight Ct.
Marshall Space Flight Ct., AL 35812

Dear Dan:

Please be advised the "Solar Energy Space Heating & Hot Water System" at the Cherry Hill Inn, Cherry Hill, New Jersey (Cooperative Agreement #EG-77-A-01-4086) became operational on November 8, 1978.

I want to take this opportunity to thank you and the other D.O.E. Staff-members for your advise and cooperation during this project.

All remaining data and as built drawings requested on your recent visit will be in your hands within a few days. Thanks again, I remain.

Yours truly,

William P. Davis

William P. Davis
Project Administrator

WPD:sd

CC: Howard Colm

SUMMARY OF PROJECT INFORMATION

Owner/Builder	Garden State Racing Association Liquidation Trust, The Bank of New Jersey, Trustee
Designer	Colm Engineering
Construction Manager	Colm Engineering
DOE Project Manager	NASA/Marshall Space Flight Center Alabama
Operational Date	November 8, 1978
Building	Type - Hotel Area - 70,000 Sq. St.
Location	Cherry Hill, New Jersey

Climatic Data

Degree Days	Heating 4600	Cooling 700
Avg. Temp. (^{o}F)	Winter 42	Summer 70
Avg. Insol. (Ly/d)	Winter 357	Summer 552

Solar Energy System

Collector Type:	Liquid evacuated tube
Manufacturer:	General Electric Company
Area:	5,759 Sq. ft. gross 4,899 Sq. ft. net
Storage System:	Insulated steel water tank (above ground)
Capacity:	7,500 gallons
Auxiliary System Type:	Oil fired steam boilers

Application

Heating 31.5%	Cooling 0%	Hot water 29.8%

ASSEMBLY/CHECKOUT OF CHERRY HILL INN SYSTEM

1.0 Introduction

2.0 Receiving/Storage

3.0 Checkout/Assembly Procedure Summary

4.0 Preliminary Efforts

5.0 Piping/Wiring

6.0 Collector Installation

7.0 Install Shrouds and Test

8.0 Insulation

9.0 Performance/Demonstration

1.0 Introduction

This document describes a program of activities with objective of DOE/Customer acceptance of a commercial solar energy system. The plan covers all activities required to satisfy contractual commitments between the contractor (Colm Engineering), the Federal DOE and the property owner/operator G.S.R.A.L.T.
This system has been installed in existing buildings at the Cherry Hill Inn in Cherry Hill, New Jersey. Costs of this system are shared between the owner/operator of the Cherry Hill Inn and the U.S. Department of Energy in accordance with DOE Agreement #EG-77-A-01-4086.This project is one of these included in the National Solar Heating and Cooling Demonstration Program.
The main feature of this system is the General Electric Type TC-100 evacuated tube collector. Some of the steps emphasized in this procedure are to provide additional assurance in the successful use of this new type of collector in a commercial-sized system.
This procedure covers all actions required from the secure handling and storage of all materials to completion of the simplified performance demonstration on the fully assembled system .
No long term performance measurements have been included in this program. This project has not been identified as one of those selected for such measurements in the National Solar Data Program. Performance measurements have been limited to the minimum necessary to demonstrate system performance in an limited manner.

2.0 Receiving/Storage

The system can be conveniently broken down into groups of items which will be delivered to the installation site. This breakdown is:

(1) Structural support framework and fasteners for the structure, assembly and installation.

(2) Shop-assembled copper tubing manifold sections with extra tubing and additional fittings to complete the entire supply and return piping.

(3) Set of standard valves and other plumbing fittings.

(4) 331 collector frames packed in open wooden crates. Each frame will contain all internal collector piping and 10 plastic shrouds.

(5) 3310 glass collector shrouds packed, in boxes of 10, similar in size and shape to fluorescent lamp tubes.

(6) One lot of 9 pumps peculiar to this system in various sizes.

(7) Four Trane heat dump units.

(8) 7500 gallon stainless steel storage tank.

(9) One lot of control valves, sensing devices, etc. for the system.

(10) Two flat plate type heat exchangers.

(11) One 100 gallon expansion tank.

(12) One alarm/control panel for system operator.

(13) Two solar integrators.

(14) Approx. 300 gallons of Prestone II (ethylene glycol anti-freeze)

(15) One set of special hardware to fasten the 331 collectors to the structure.

(16) One lot fiberglass pipe insulation in sizes suitable for each of the system lines and the various fittings.

(17) Two sets of personal safety equipment for safe installation of the 3310 glass shrouds.

(18) Miscellaneous additional hardware of a minor nature.

(19) One lot of electrical hardware (disconnects, circuit breakers, relays, controls, etc.)

3.0 Assembly/Checkout Procedure Summary

The general assembly process for this system will involve the following phases A brief description of each phase is given here, more detail follows:

3.1 Phase I. Preliminary Efforts

All large items are to be set in place and fastened down. Holes will be cut for the passage of pipes, conduit, etc. Wherever possible, patchwork, etc. will be completed during this phase.

The controls and sensors will be inspected. The devices included in this test will be:

(1) Automatic temperature controller (ATC)-1 with sensor T-1

(2) ATC-2 with T-4

(3) ATC-3 with T-5

(4) Differential temperature controller (DT-1) with T-2 and T-3

(5) Pressure switch (PS-1)

(6) PS-2

(7) Pressure relief valve (PRV)

(8) Tank safety valve

(9) Mixing valve V-6

(10) Tank level sensor

(11) Solar Integrators (two)

*Items 1,6,7,8, and 10 are detailed in section 2.0

3.2 Phase 2. Piping/Wiring

Interconnecting piping, wiring, etc. will be completed in accordance with the appropriate drawings. Simple system tests will be performed for leakage*, continuity, etc. The calbrated items will be installed under supervision of Colm Engineering personal.

3.3 Phase 3. Collectors

The 331 collector frames will be set in place and bolted down. The Solar Integrators will be installed and the electrical connections will be made. The flared fittings connecting each collector with the supply/return manifolds will be assembled. Flow balance will be established with water in the system.

3.4 Phase 4. Install Shrouds/Test

The collector loop is then drained and refilled with glycol solution. The collector shrouds will then be installed.

3.5 Phase 5. Installation

The system will be kept operating (fluid flowing, if the sun is shining) and all lines, fittings, etc. will be insulated.

3.6 Phase 6. Performance/Balance Tests

Temperature/flow/pressure measurements will be made to determine that the system will operate and collect solar energy as required.

*All systems checked with water.

Sections 4.0 - 9.0 describe each of the activity phase listed above. The level of detail should be sufficient for actual comment on the nature and scope of the planned activities. The final sections are a reference list and a drawing list for the project.

4.0 Phase 1. Preliminary Efforts

The activities during this period of time will center on final location of the larger items of equipment included in the system.

All paperwork covering the site deliveries (invoices, shipping tags, etc,) will be separated at time of delivery and held for the Colm Engineering Co.'s representative. Standard receiving records will be maintained by the responsible Cherry Hill Inn personal so that Colm Engineering will know the status of deliveries. The most important large item requiring installation will be the aluminum support structure for the collector array. A set of six drawings shows this structure in detail with the mounting provisions designed for it. The roof of the building must be pierced, as shown on the drawings, in 126 places for the installation of the stub columns which support the framework. The base of each stub column will be sealed to the roof with a pitch pocket. Each of these pockets must be inspected prior to final sealing to provide assurance that the Inn roof has been properly resealed. The dimensional pattern generated by the stub column upper flanges must match that of the aluminum structure exactly. Final sealing of the pitch pockets will be accomplished after the structure is installed on the stub columns. Temporary protective closures will be provided by the contractor at each pitch pocket.

The system heat dump will consist of Trane unit heaters. These four units will be installed on the lower Inn roof. The 7500 gallon stainless steel storage tank will be delivered completely finished without its insulation jacket in place.

Drawing No. UL1000 shows the equipment arrangement for the second floor equipment room. Heat exchanger No, 1, the expansion tank and pumps P-1/P-1A will be installed in this space as shown on the layout. Penetrations required between this space and the roof lines and the next lower floor should be made at this time (lines should follow the elevator shaft to the basement area).

The 331 collector frames, the 3310 shrouds, the special mounting hardware and the solar integrators comprise the collector shipment form General Electric Co. The mounting hardware must be counted. The number of shrouds (count 331 boxes must be verified. The solar integrators will be assigned to Colm Engineering for safe keeping until it is needed.

The primary water and water-glycol circulation systems will be preassembled in the contractor's shop as much as possible. Drawing No. R1010 shows the extent of this prefabrication. This will reduce the number of field joints and subsequent system problems. These prefabricated piping sections must be checked against the drawing when received, then stored on the site. All fittings, sensors, pumps, valves, etc. must be counted, identified as to type, etc. and stored. Most other materials needed at the site will be included in the following list:

1. Approximately 300 gallons Prestone II

2. One lot assorted pipe insulation

3. One lot electrical hardware

4. Miscellaneous hardware

All that will be required for the latter items will be receiving and storage. The special scaffold for the collector shroud installation and the special safety equipment for this operation will be supplied when they will be required.

5.0 Piping/Wiring

All plumbing will be installed with the exception of the collector serpentines. All new plumbing will be pressure tested one loop at a time with water, to 150% of normal operating pressure. Leakage will be observed and detected with a pressure gage holding pressure for 3 hours. All leaks will be repaired.

Heating and Storage Loop will not be tested completely; valves will be installed at each end of the new piping and only the new section will be pressurized.

Domestic Hot Water Loop will be tested only between the booster pump discharge and the mixing valve.

Collector Loop cannot be tested during phase 3 checks. All of the collector connections will be closed with plastic caps.

The calibrated sensors and devices will be installed during this construction phase.

All wiring and electrical hardware will be installed during this construction phase. This will include the controls, the sensors, the power operating equipment, etc. The only item not to be installed will be the GE Solar Integrator

although conduit will be installed to the approximate location of the integrator in the solar array. Multiphase equipment (pumps, fans, etc.) will be checked for rotation as connected. All circuits will be checked for continuity and insulation resistance prior to the application of power. Drawing No. E1000 constitute complete wiring diagrams for the system. Functional tests of the electrical items will be performed as part of Phase 4 test.

6.0 Collector Installation

The 331 collector frames will be installed on the aluminum support structure. When the frames have been bolted in place,the copper manifolds will be brought into position. The individual collector serpentines will be connected to them. The flare fittings will be made hand tight only; final tightening will not take place until Loop No. 4 has been filled. Fill Loop No. 4 with tap water in the following manners:

1) Use supply line to fill sump tank
2) Actuate P-3 (manually) and begin pumping water through the Mains
3) Use wrenches to tighten the supply connection for each collector. Loosen the return fitting.
4) Working one collector at a time as each one flows full of water, tighten the return flare nut.
5) Manually open valve V-1 & close valve V-2 until heat dump is filled.
6) Open the top valve of the expansion tank until it is half full, close the top valve.
7) Check operation of manual vent valve. Use it to aid in bleeding excess air from the loop.

8) When the loop has been filled, pressurize it to 40 psi with pumps P-1/P-1A running and check for leaks. Hold for 3 hours. Repair any leaks.

At the conclusion of the above tests, shut down all system pumps and drain Loop No. 4 as much as possible. (Collectors will not drain.)

The lowest point in this system is in the second floor equipment room at heat exchanger No. 1. The manual vent valve should be open when the system is drained. Care will be required to make certain that the heat dump has been drained.

Mount the Solar Integrator on a collector frame in the back row and make necessary electrical connections to it.

7.0 Install Shrouds and Test

The collector loop (Loop No. 4) must be filled with glycol solution before this operation can begin. At this point in time, the collector serpentines should be filled with water and the remainder of Loop No. 4 will be dry.

Approximately 800 gallons of 35% ethylene glcol 65% water solution will be mixed thoroughly in the sump tank. Solution's specific gravity will be used as a measure of a proper mixture.

The solar loop will be filled with the glycol solution without disturbing the collector connections. The manual vent valves will be used to assist in removing air from the Loop. Pump P-3 will be used to move solution from the sump tank into the loop. Care will be observed to fill the heat dump and partially fill the expansion tank. When the loop is filled, pump P-1/P1-A will be started to force the glycol solution through the collectors as well as the rest of the loop.

Operate in this manner, with the pumps running, and vent the loop periodically using the manual vent valve. Three hours of operation should be sufficient. The final check will be based on lack of air from the manual valve when it is opened. The shroud installation is a complex procedure involving a degree of risk for the two men involved. Each of the men will be equipped with a face shield, protective gauntlets and outer garments so that no injuries will result from glass splinters.

WARNING: Once the shroud installation procedure is started, liquid must be kept flowing in loop No. 4 during the daylight hours (P-1 or P-1A running check to see that they alternate.) If this system must be shut down for service, it must be done at night. The heat dump will protect the system from damage even though the other loops are not activated. The installation crew should be cautioned against handling the heated tubing without their gloves. In order to do this, the heat dump must be activated by supply electrical power to ATC-1, *V-1, V-2 and the heat dump fan. Make a simple manual check (V-1 opens, V-2 closes, fan goes on when ATC-1 is activated.) The shroud installation procedure is simple, but it must be repeated 3310 times for the entire array. A representative of General Electric Co. will train the crew and demonstrate the procedure at the site. In brief, the following must be done:

1) The rear man must reach over the upper end of the collector frame and remove the wire clip which holds a plastic tube (contains one leg of the serpentine) to its V-shaped reflector and save the clip.

* See control schematic (Drawing No. E 1000)

2) The front man tilts that serpentine leg with its tubular cover free of the reflector so that its upper end is roughly 6-8" away from the reflector surfaces.

3) The front man starts to remove the plastic tube (a shipping protector) from the serpentine by sliding it away from himself toward the rear man.

4) When the plastic tube is completely removed from the serpentine, the front man will hold the serpentine (by means of the 1/4" tube not the heat transfer surfaces.) The rear man will remove the plastic tube and discard it.

5) The rear man will remove one shroud from the cardboard carton and strip off the polyethylene shipping bag.

6) The rear man will start to slide the shroud over the serpentine leg by gently squeezing the uppermost heat transfer fin until it fits inside of the shroud.

7) The shroud is slid in place by a team action of both men. The front man prepares the way by squeezing the heat transfer fin; the rear man prepares the shroud from the free end. When the shroud is almost in place, the front man guides the rubber bushing (at the base of each shroud) into the hole provided for it in the collector frame.

WARNING:

If one of the heat transfer fins is caught on the lip of the shroud, it will most likely be deformed. This deformation must be corrected and the fin surface restored (as much as possible) to the original condition. The entire installation procedure must be stopped whenever this occurs.

Care will be required to protect the shroud involved during the heat transfer surface repair. Hand burnishing is an acceptable method to repair the copper fin.

8) When the shroud is seated at its lower end, its upper end should be lowered into the V-shaped reflector.

9) Reinstall the wire clip over the shroud.

10) Repeat steps 2) to 10) for the other nine shrouds in each collector.

11) Move to the next collector.

12) Repeat steps 1) to 12) for the 330 other collectors.

Continue with the preliminary tests as follows:

A. Activate P-2/P2a via ATC-3. Storage tank water will be cold therefore either P-2 or P-2A should start. (Check to see that they alternate.)

B. Activate DT-1 and P-4, lock in ATC-2.

C. Tank water temperature should start to rise. Run in this manner until tank temperature causes DT-1 to close starting P-4.

D. Warm water should cause heat exchanger No. 2 to rise in temperature.

E. Let system run in this manner for 3 hours; look it over carefully to note any peculiar conditions.

F. Secure the system as follows:
Remove power from ATC-2, ATC-3, P-2/P-2A and DT-1. Leave the rest active.

8.0 Installation

All of the pipes, pumps, fittings, tanks, etc. which comprise this system will be insulated to reduce heat loss between the collectors and the system supply points. All but the solar collector loop will be inactive and cool throughout this process. The solar loop will be active and warm; care will be required to prevent injury to workmen who will insulate these lines as it will not be possible to shut down this part of the system for insulation application. When the insulation has been completely installed, the entire system will be activated and routine operating experience will start to be accumulated.

9.0 Performance Demonstration

It will not be possible to evaluate the performance of the assembled system in the terms described in the "Project Information Summary Sheets" of the Colm proposal. The installation of long term performance test instrumentation was not made a part of this contract; performance therefore will have to be inferred from a limited amount of measured information. Flow balance between collectors, for example, will not be possible but balance on a temperature basis will be possible. Proof of solar utilization will not be feasible, but it will be possible to estimate system losses with limited accuracy. The procedure which follows is a compromise between the restrictions of the program budget and a desire to evaluate the system performance in-depth for a short period and on a simpler basis over a period of several years.
The key to this procedure lies in a few basic assumptions. These are:

1. Acceptable flow balance will be achieved by adjusting flow in groups of 11-15 collectors. When this is done, it will be reasonable to assume that all collectors in the array will be receiving approximately the same flow.
2. All heat removed from Loop No. 4 is transferred to the storage tank via the lines of Loop No. 3.
3. The analysis of energy distribution from storage is demand sensitive. There is no point in evaluating this distribution as a measure of solar system performance.

Part I. Limited Flow Balance

Simple flow restricting valves will be installed in each major system of the supply mains. Each collector is to have a total flow of 0.22 gpm. This flow will be adjusted in each main to provide a total flow equal to the number of collectors fed by that main times the rated flow. Flowmeters will be installed in the lines to permit the flow balance adjustments.

Part II. Energy Collection

The object of this procedure will be the short term demonstration of the fact that the collectors will feed energy into Loop No. 4. A coarse measure of this relative efficiency of that collection process will be made.

Part III. Heat Exchanger Effectiveness

The object of this part of the test is to obtain a measure of inlet and outlet conditions for heat exchanger No. 1 while tranferring energy from Loop No. 4 to Loop No. 3. Inlet and outlet temperatures of the heat exchanger and flow in both loops will be rquired over a period of several daylight hours.

Part IV. Heat to Storage

For the period of times used in Part III the flow and temperatures in Loop No. 3 will be used to measure the heat entered into storage. This will be compared with the energy collected over the same period.

Part V. Trouble Simulation

All trouble mode indications on the control panel will be simulated electrically in a way to show that the panel is indicating correctly.

Part VI. Training

Cherry Hill Inn personnel will be trained in system operation with special emphasis in possible problems and their proper solution.

ACCEPTANCE TEST PLAN RESULTS

1. Lower loop was hydrostatically tested at 1.5 times working pressure on August 11,14, and 15, 1978. Leaks were repaired and loop was retested.

2. Upper loop and collector loop were flushed, drained, cold water filled and hydrostatically tested at 1.5 times working pressure on September 12, 1978. Leaks were repaired and the loops were retested.

3. Complete electrical system simulation and testing took place on September 19, 20, and 21, 1978.

4. Final leak testing of the glycol collector loop system took place during the week of September 25, 1978.

CHERRY HILL INN OPERATING
AND MAINTENANCE MANUAL

TABLE OF CONTENTS

Section	Title	Page
	SUMMARY	26
1	OPERATION OF THE SOLAR SYSTEM	27
	1.1 Introduction	27
	1.2 Solar Energy Collection	27
	Collector Loop	28
	Solar Block Diagram	29
	Diagram A	30
	Hot Water Loop	31
	Diagram B	32
	Heating Loop	33
	Diagram C	34
	1.3 Functional Modes of Operation	33
2	MAINTENANCE	38
	2.1 General Information	38
	2.2 Prestone II Maintenance	40
	2.3 Pump Schedule	40
	2.4 Pump Checkout	40
	2.5 System Operation	42
	2.6 Collector Loop Fill Procedure	43
	2.7 Heat Exchanger Maintenance	44
	2.8 Glycol Testing	45
3	DRAWING LIST	46

SUMMARY

The Cherry Hill Inn has installed a Solar System to provide space heat and hot water. This solar heating system should provide approximately 30% of the yearly space heat and hot water requirements. This manual describes the operation of the solar energy system and gives instructions on how to maintain it and keep it operating properly.

1. OPERATION OF THE SOLAR SYSTEM

1.1 INTRODUCTION

The Cherry Hill Inn has three distinct heating and cooling systems. Each was installed during a phase of construction to support the particular area being built at the time. The heating systems are interconnected in that the boilers can be valved to support one another. Normal winter operation for the section that is supported by the solar system (the original building) utilizes two 125 horse power boilers to supply 15 pound steam to produce hot water for the main air handler fan coil unit and the individual room heater coils. Domestic and kitchen hot water is produced by 5 pound steam supplying energy to three Patterson-Kelley storage water heaters. An instantaneous hot water heater is available to boost water temperature as required to meet kitchen sanitizing requirements.

The solar system as installed, is operable during the entire year as a prime energy source. In the event sufficient energy is not available from the solar system in operation, or from its storage tank, the existing oil fired boilers will automatically supplement the solar output and meet the needs of the facility.

1.2 SOLAR ENERGY COLLECTION

The solar system consists of an array of evacuated tube collectors, storage tank, heating system exchanger, domestic water system exchanger, pumps, piping networks, controls, etc. These components are arranged in a manner which will allow the solar system alone, the solar system in conjunction with the existing system, or the existing system alone to meet the thermal requirements of this building and its occupants.

In operation, the solar collectors absorb radiant energy from the sun, transfer it to an ethylene glycol anti-freeze solution which in turn

heats water via a heat exchanger. This hot water can then be used to heat the building, hot water or both.

A simplified diagram of the basic system is on the following page.

The actual Cherry Hill Inn solar system will be described in detail loop by loop in the next section of this manual.

Collector Loop

See Diagram A.

This loop consists of:

331 Solar Collectors
Solar Integrators (two)
Piping Network
Expansion Joints
Temperature Controller
Motorized Valves
Heat Dump (4 units)
Relief Valves
Heat Exchanger I
Air Separator and ATFL
Expansion Tank
Pump Set
Pressure Switch
Manual Fluid Make-up Supply - Tank - Pump
Strainer

The solar integrator controller provides a turn-on and turn-off function by sensing solar insolation rate and energizing two (2) outputs when an average insolation level of 35BTU/ft^2 is reached. The signal will activate pump P-1A or P-1B. Fluid will be pumped through the collector array and monitored by temperature control ATC-1. If the fluid temperature is below 270°F, fluid will bypass the heat dump and flow through Heat Exchanger 1. Air will be removed from the circuit by the Airtrol and ATFL. A compression tank is in the circuit to absorb fluid expansion.

If ATC-1 senses a temperature higher than 270°F, valve V-1 opens and valve V-2 closes. The heat dump is activated and remains on until the fluid temperature drops below 265°F. Relief valves set at 48-50 psi are located on the roof and in the upper mechanical room.

COLM ENGINEERING
SOLAR BLOCK
DIAGRAM

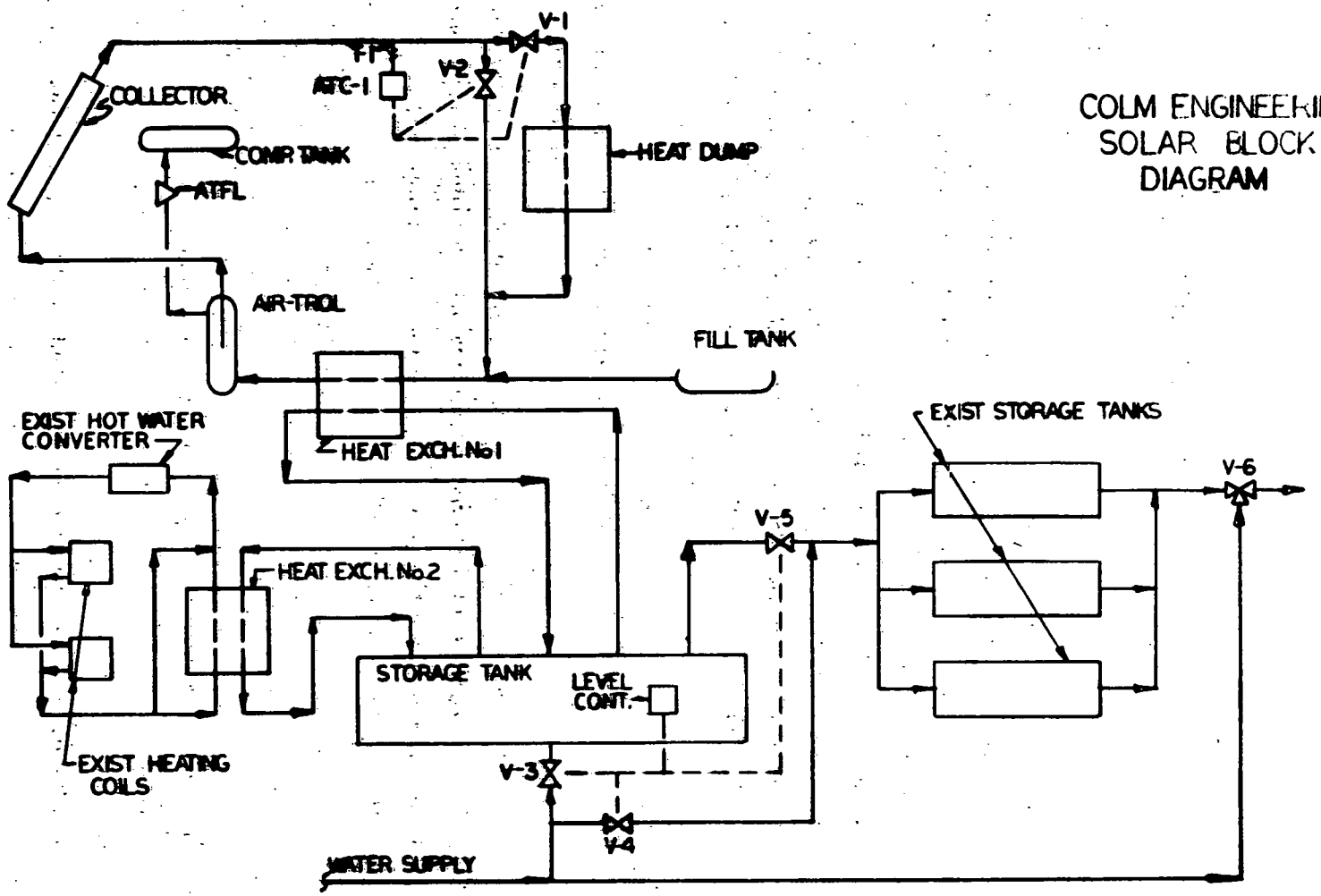

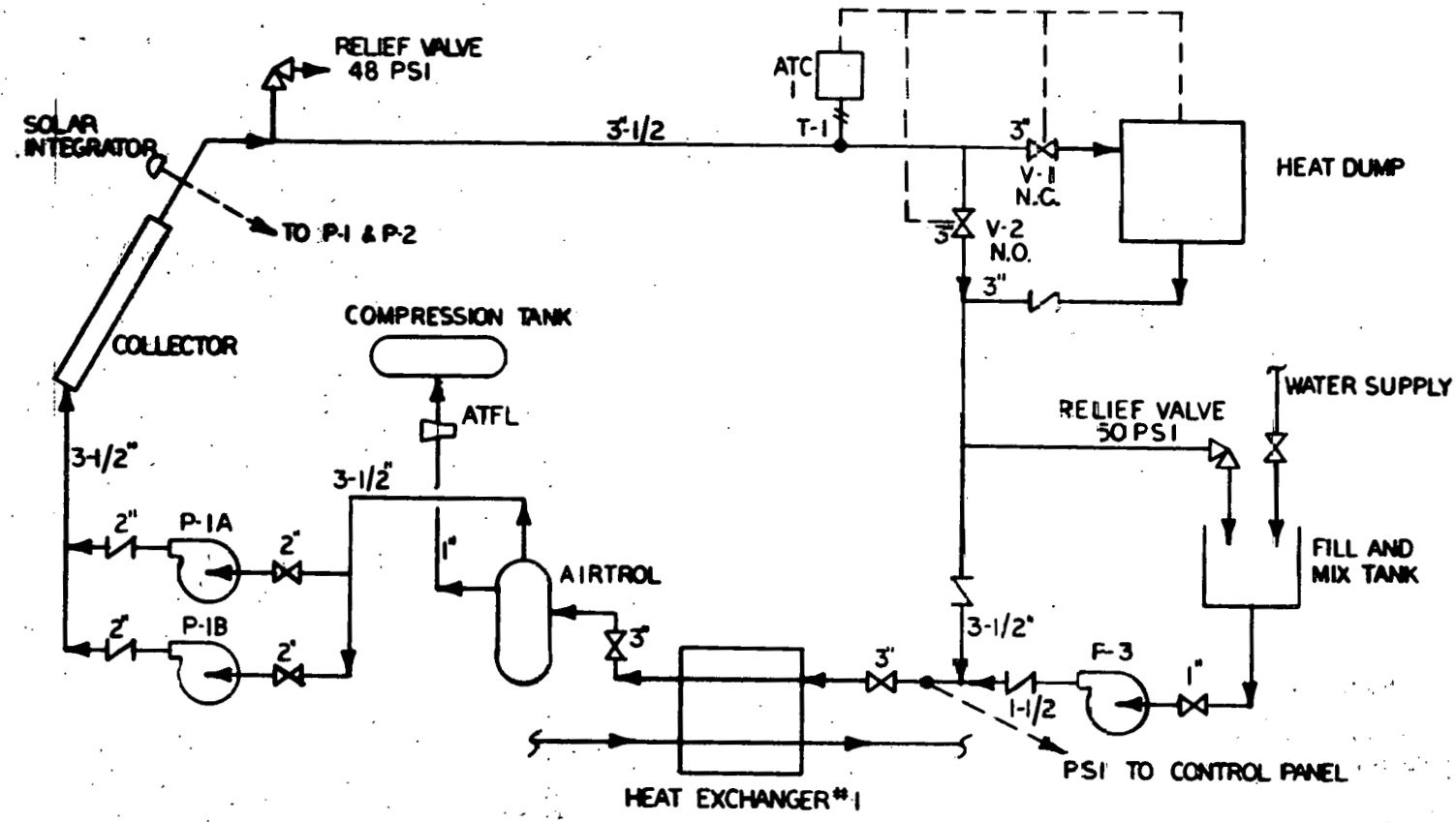

COLM ENGINEERING
DIAGRAM A

In the event of pressure loss and the line pressure drops below 3 psi, a pressure switch activates an alarm at the Inn's front desk. The Inn keeper will then contact the engineer on duty, who in turn will investigate the problem.

A fill tank is located in the upper machinery room. Water and Prestone II (ethylene glycol) are mixed in a 35% by weight solution and can be manually pumped by P-3 to fill or replenish the system.

Hot Water Loop

See Diagram B

This loop consists of:

Piping Network
Storage Tank (7500 gal)
Temperature Controller
Relief valves
Pumps
Motorized valves
Hot water storage tanks (3 existing)
Pressure regulator & gauge set

Pump P-2 or P-2A is controlled by temperature controller ATC3 as well as the solar integrator. P-2 pumps water through the cold side of heat exchanger 1. If the temperature in the tank is equal to or greater than 200°F, ATC 3 causes P-2 to stop by overriding all other commands to P-2. An alarm advises the engineer (via the Innkeeper) to add additional facilities to the load when T5 approaches 200°F.

Existing cold water supply pressure is reduced to about 15 psi and is allowed to flow into the tank as required via motorized valve V-3. Hot water is supplied to the existing hot water storage tanks via pump P-5 and two (2) pressure boosters. The pressure boosters are maintained at 45-65 psi. When pressure drops below 45 psi, Pump P-5 is activated by a pressure switch and will stay on until 65 psi is reached. The hot water storage tanks are individually connected to this solar circuit. In the event one tank cannot use all of the hot water produced by the solar system, the second and

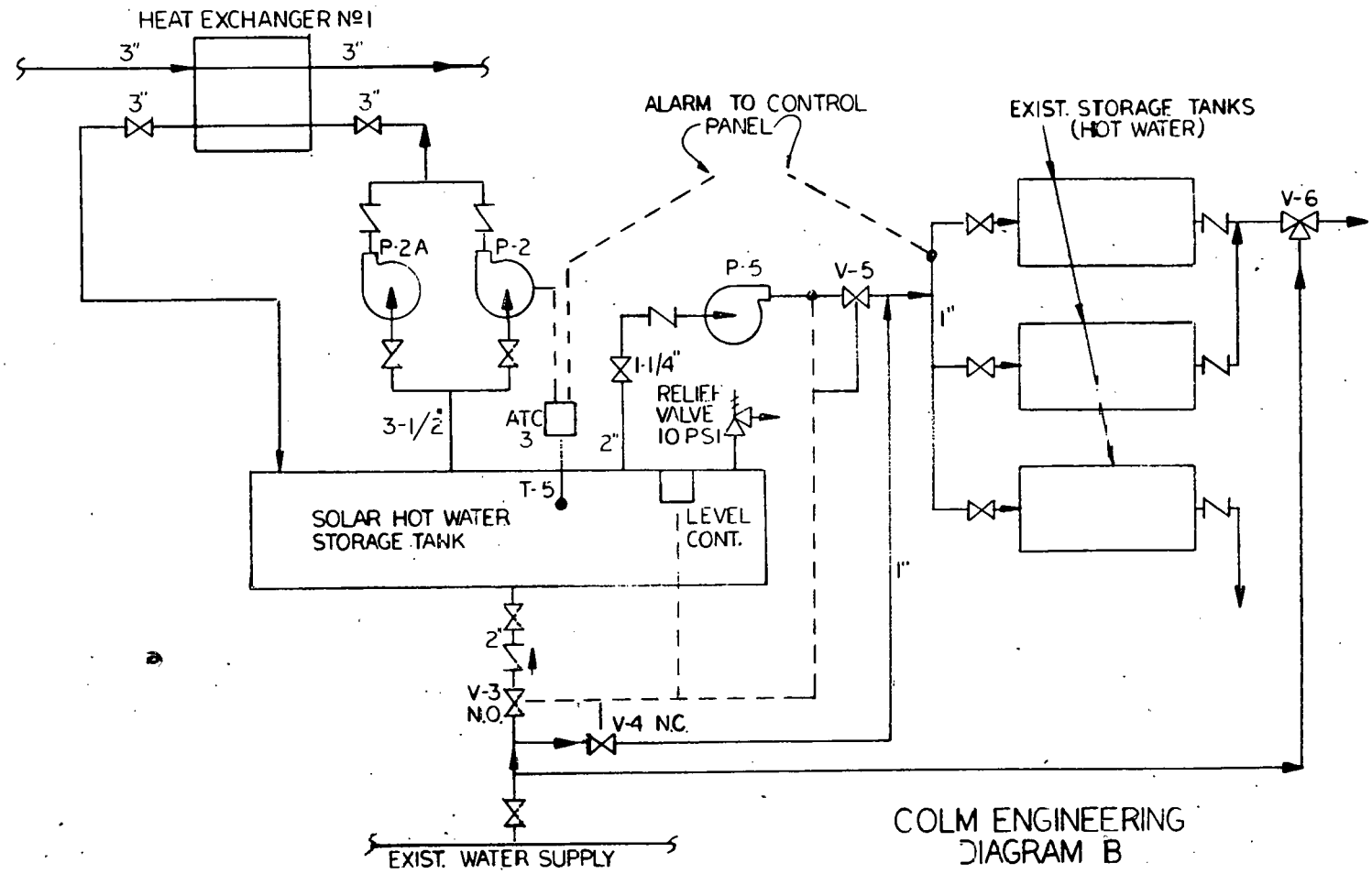

COLM ENGINEERING
DIAGRAM B

finally the third tank can be valved into operation. In the event of pump failure, valve V-3 will close, and the system will operate in a backup mode with 5 psi steam heating the water in the tanks (past practice). An alarm is in this circuit to advise when solar hot water supply is below 90°F. The engineer may then manually delete this phase of solar supply from its operating condition and use the existing backup system. It is possible to utilize solar heating in one tank and steam heat in the other tanks.

Heating Loop

See Diagram C

This loop consists of:

- Heat Exchanger II
- Pumps
- Piping Network
- Differential temperature controller
- Hot water convertor (existing)
- Pumps (existing)
- Heating coils (existing)

In operation, if there is a temperature differential of 6° F and T2 is greater than T3, controller DT, allows pumps P4 to pump heated water through heat exchanger 2. This heated water in turn heats the existing hydronic heating loop. If the temperature differential is less than 3°F, pumps P4 will not operate. Also pumps P4 will not operate if T4 is greater than 175°F. If weather conditions indicate that less heat is required, the engineer can disconnect one or more P4 pumps as required.

1.3 FUNCTIONAL MODES OF OPERATION

Condition 1

Solar Integrator on:

Signal to pump P1 and P2 to operate. P2 operates on an adjustable 3-30 minute time delay.

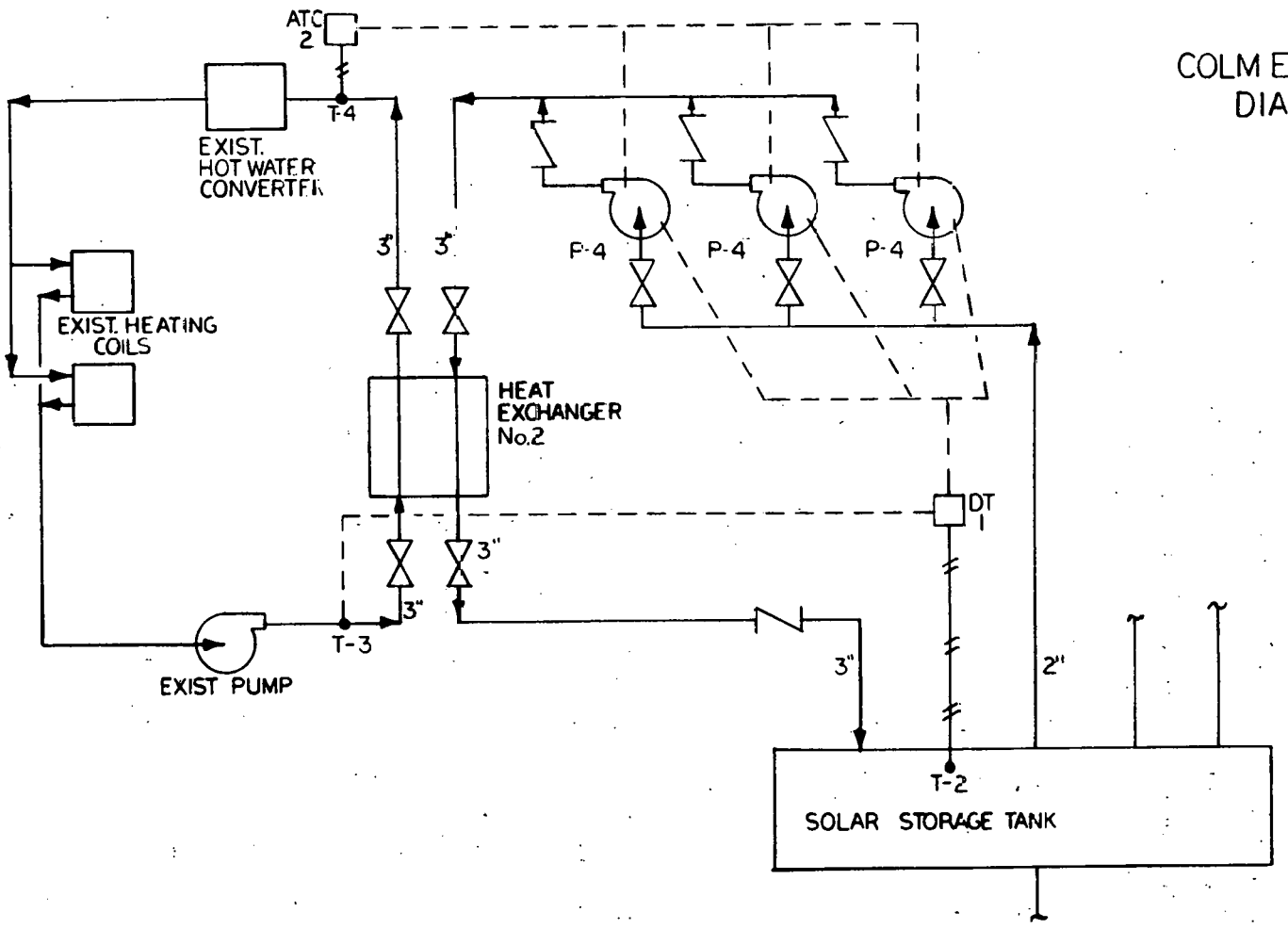

COLM ENGINEERING DIAGRAM `C

Solar Integrator off:

P1 off
P1 on if:
system temperature as sensed by ATC1 is too high
then
heat dump operates and V1 opens and V2 closes

Pumps P4 can pump if required, as P4 is controlled by the temperature differential between T2 and T3.

NOTE Heat dump, ATC1, P1, V1 and V2 are connected to a back-up electric generator. Two solar integrators are in parallel circuits. One is back-up to the other & either unit can operate the system.

Condition 2

Space Heating with Solar Energy:

During solar energy collection or non-solar energy collection periods, if T2 is greater than T3 by more than six degrees (6°F), differential temperature controller DT1 allows pumps P4 to pump heated water through Heat Exchanger 2.

Pumps P4 will not operate if T4 is greater than 175°F (ATC2)

Condition 3

Collector Loop Overheat Protection:

When T1 is greater than 270°F, P1 will operate regardless of any other condition. ATC1 will cause valve V1 to open and valve V2 to close. The hot Prestone will flow through the Heat Dump circuit and reduce fluid temperature. When T1 drops below 270°, the Heat Dump fans stop, valve V1 closes and valve V2 opens.

NOTE Heat dump, ATC1, P1, V1, and V2 are connected to a back-up emergency generator system.

Condition 4

Storage Tank Overheat Protection:

The maximum allowable storage tank temperature is 200°F. When T5 is equal to 200°, ATC3 causes P2 to stop by overriding all other commands to P2. An alarm advises the Engineer to add other facilities to the load when T5 approaches 200°F.

The Engineer will manually be able to valve in other heat loads such as:

kitchen water requirements
additional building wing domestic water
laundry requirements

Condition 5

Filling:

The system will maintain the Prestone II inventory in the collector loop. If the pressure at PSI drops below a preset value (3 psi), an alarm rings at the control panel and a warning light will indicate a potential system leak. Fluid can be mixed in the reservoir tank and can manually be fed into the system via pump P3. The mixture is 35% Preston II by weight.

Condition 6

Hot Water Supply - To operate place summer-winter switch in summer position.

Pressure reducing valve is set to reduce water supply pressure to 15 psig. Valve V3 maintains a full tank. Booster pump P5 and booster tanks maintain line pressure. If booster pump P5 fails, valve V3 closes. Fresh water will then bypass the storage tank and will be fed directly to the existing domestic hot water heating and storage system.

Additional valves V5 and manually operated valves (see Condition 4) are part of this system. Valves V3 & V5 open when the summer - winter switch is in the summer position.

Condition 7

Mixing:

Thermostat mixing valve V6 automatically limits the delivered water temperature to a preset maximum of 140°F.

Condition 8

Alternate Hot Water Preheating or Bypass:

Valve V3 is capable of directing the city water supply through the hot water storage tank for domestic preheating. During normal winter heating season, valve V3 is closed. This diverts the city water supply directly to the existing domestic hot water storage tank system. In the spring, summer and fall, valve V3 will most likely be open and will permit solar heating of the domestic hot water.

In winter, during periods of low occupancy, seasonal conditions, time of day, etc. valve V3 may be opened to furnish solar heated domestic hot water.
See Condition 6

Condition 9

If water in the storage tank is below 90°F, a signal will advise the Engineer to manually disconnect the domestic hot water service from the system. When temperature in the tank is above 90°F, the Engineer will reconnect hot water service.

2. MAINTENANCE

In this section maintenance data, pumps schedules, blueprints and manufacturers operating instructions are located for the following items:

Pressure regulating valve-Watson McDaniel
Motorized Valves-Conbraco Industries
Pumps-Bell & Gossett
Airtrol System-Bell & Gossett
Solar Integrators-General Electric
Solar Collectors-General Electric
Turbine Flow Meter-Mead Instruments
Heat Exchangers-American Heat Reclaiming Corp.
Control Aid Co.
Booster Tanks-Airtrol Inc.
Heat Dump-Trane Heating Products
Thermoflo Indicator-Bell & Gossett
Differential Temperature Control-Rho Sigma
Automatic Temperature Control-Minnesota Honeywell
Motor Starters, Relays-Allen Bradley

2.1 GENERAL INFORMATION

Problems with the solar energy system will most likely be due to one of the following causes: leaks, pump failure, or control failure. The system should be periodically inspected for leaks. If any are found, they should be fixed as soon as possible.

If a pump does not run when expected, it could be due to a pump failure or control failure. If the pump should be running and is not, check the voltage at the pump. If 208V is present and the pump is not running, repair or replace the pump. If 120V on control lines is not present, the controls are probably malfunctioning. One way to tell if a

pump is running is to listen to the motor. However, even if the pump motor is running, the pump may not be working properly. If the pump impeller is damaged, the motor may run, but the pump will not move the fluid at the desired rate. This problem can be diagnosed with the pressure gauges. The use of the pressure gauges will be described later.

The solar system controls are used to operate the pumps and the heat dump fan and valves. If the pumps, fans or valves do not operate when expected, but operate when connected to a proper power source, the controls may be faulty. The first step in solving control problems is to see if the wiring connections are clean and tight. If there is a relay between the temperature controller or thermostat and the pumps, fans or valves, check the relay contacts for dirt or corrosion and check the relay for proper operation. Then check the temperature sensors and wiring. If the sensor is bad or there is a break in the wiring, the controller will not operate properly. If these checks fail, the temperature controller or thermostat should be replaced.

The pressure gauges in the solar heating system are highly useful in spotting problems. There are a number of pressure gauges in the piping going to and leaving pumps. The pressure gauges are located so they can be easily read; they are not necessarily located next to each pump. When a pump is not running, the pressure gauge in the pipe going to the pump (pump inlet) and the pressure gauge in the piping leaving the pump (pump outlet) should have approximately the same readings. When a pump is operating, the pressure gauge connected to the pump outlet should read noticeably higher than the pressure gauge connected to the pump inlet piping. If a pump motor is running and both pressure gauges have the same readings, then one of the gauges is clogged with dirt or defective, there is air in the piping, or the pump impeller is damaged.

If the piping is full of liquid, check the pressure gauges. Tap them to see if they are stuck. If they still read low and appear to be defective, replace them. If the pressure gauges are working properly and there is no air in the system, the pump impeller should be checked.

2.2 PRESTONE II MAINTENANCE

A representative sample, taken during circulation and packaged in a clean, glass, one-pint container, should be sent to Union Carbide Corporation, Consumer Products Division, Tarrytown Technical Center, Tarrytown, New York 10591. Information on the application and the case history of the sample, date and concentration installed, approximate total hours of operation, amount of water and/or "Prestone II" added, etc. should be provided. This should be done every 6 months.

There is no simple dependable way, except chemical analysis, to determine inhibitor condition of used coolant. However, in a system containing iron or steel, which was reasonably rust-free when the coolant was installed, inhibitor exhaustion is generally indicated by a brown or rusty color of solution, and when this occurs, the solution should be drained and discarded and a fresh fill installed.

It is recommended not to add anything to "Prestone II" solutions except water and fresh "Prestone II" Winter-Summer Concentrate or "Prestone" brand Cooling System Sealers and Stop Leaks. Other products may contain materials not compatible with "Prestone II". Adding an inhibitor to a used coolant solution will not eliminate contamination already present.

2.3 PUMP SCHEDULE

Copy attached. (See next page)

2.4 PUMP CHECKOUT

Only one pump is required to operate the collector loop and the loop between heat exchanger 1 and the storage tank respectively. The second pump is a backup unit. To insure proper pump seal lubrication, the pumps are automatically alternated electrically. Thus, if the system is deactivated regardless of time of day, or day of week, the next time the system is activated the other pump is used. The pumps can be electrically tested by moving the control selector switch form "1-1A"

PUMP SCHEDULE

Note: All pumps are ITT Bell & Gossett

Pump No.	Description
P-1 & P-1a	Series 80, #145T, 2 H.P., 208 Volts/3 phase 2" Flanged Suction & Discharge Nozzles 1750 RPM
P-2 & P-2a	Series 80, #808T, 5 H.P., 208 Volts/3 phase 3" Flanged Suction & Discharge Nozzles 1750 RPM
P-3	Series 60, 6017T, 1 H.P., 208 Volts/3 phase 1 1/2" Suction & Discharge Flanged Nozzles 1750 RPM
P-4 (Qty 3)	Series 60, #6016T 3/4 H.P., 208 Volts/3 phase 1 1/2" Flanged Suction & Discharge Nozzles 1750 RPM
P-5	Series 1535, #356T, 2 H.P., 208 Volts/3 phase 1 1/4" N.P.T. Suction Nozzle, 1" N.P.T. Discharge Nozzle 3500 RPM

automatic alternating cycling to position "1 or "1A". If the light does not luminate, check the bulb and if after a bulb change the light does operate, the electrical alternator has malfunctioned. This is a weekly check procedure for pumps 1-1A, and 2-2A.

2.5 SYSTEM OPERATION

The solar system consists of 331 General Electric TC-100 evacuated vacuum tube collectors mounted onto an aluminum truss frame network which is in turn bolted to the existing building structural beams. The solar collectors are manifolded together in groups so that only a very small portion of the system need be turned off in the event a collector required maintenance. The collector loop is designed to pump fluid at approximately 73 GPM via Pump P1. A Mead "Turbine Flowmeter" is used to adjust the flow rate. The probe is inserted into a 1-1/2" pipe tap, screwed in place, the gate valve opened, and then the probe is inserted down into the center of the pipe line. The read out device is calibrated in gallons/minute. The ball valve in the flow line is used to adjust the flow to meet the design specification of 73 GPM. After the flow is checked and calibrated, the Turbine Flow-meter is removed from the line and the gate valve is closed.

The pump system is protected by a 20 mesh strainer. For initial flush and clean out a 50 mesh strainer is used. The 50 mesh strainer will be discarded prior to installation of the glass shrouds on the solar collectors.

Pump P3 is used to fill the system and is manually controlled. During the filling operation, the heat dump system is kept in an operating position. This insures that the heat dump fans and associated pipe lines are full of fluid. A manually operated vent is also kept open to insure that air is eliminated.

The collector loop has a pressure switch connected to an alarm at the Innkeepers desk. In the event line pressure drops below a certain valve, the alarm alerts the person on duty who then contacts the Engineer.

The collector loop contains pressure relief valves (set at 50 psi) and an air separator and expansion tank. Expansion tank pressure is maintained at about 20 psi.

Pump P2 is also adjusted using the Mead "Turbine Flowmeter;" will be set at about 125 GPM.

Pumps P4 are adjusted using the B&G Thermoflo Indicator and will be set at 125 GPM.

2.6 COLLECTOR LOOP FILL PROCEDURE

1. Use supply line to fill sump tank.
2. Actuate P-3 (manually) and begin pumping 35% Glycol/65% Water through the mains.
3. Use wrenches to tighten the supply connection for each collector. Loosen the return fitting.
4. Working one collector at a time as each one flows full of water, tighten the return flare nut.
5. Manually open valve V-1 and close valve V-2 until the heat dump is filled.
6. Open the top valve of the expansion tank until it is half full. Close the top valve.
7. Check operation of manual vent valve. Use it to aid in bleeding excess air from the loop.
8. When the loop has been filled, pressurize it to 20 psi with pumps P-1/P-1A running and check for leaks. Hold for 3 hrs. Repair any leaks.

Acceptable flow balance will be achieved by adjusting flow in groups of 11-15 collectors. When this is done, it will be reasonable to assume that all collectors in the array will be receiving approximately the same flow.

All heat removed from collector loop is transferred to the storage tank via the lines of the loop between basement and the floor.

Simple flow restricting valves will be installed in each major system of the supply mains. Each collector is to have a total flow of 0.22 gpm. This flow will be adjusted in each main to provide a total flow equal to the number of collectors fed by that main times the rated flow. The Turbine Flowmeter will be installed in various lines to permit flow balance adjustments.

In the event it is necessary to repair a collector or its manifold, do the following: supply

1. open drain valve
2. close subsection valve (3/4")
3. close subsection return valve (3/4")
4. open fill "T"
5. make repair
6. fill line with a proper mixture of Prestone II and water using a plumbers hand pump
7. be sure that all air is eliminated from panels
8. open supply valve
9. open return valve
10. close drain valve
11. close fill "T"

2.7 HEAT EXCHANGER MAINTENANCE

Heat Exchanger Number 1, will be drained and inspected in the spring of the 1st year of operation. Engineer and factory representative can determine condition of plates and make required changes.

Inspection the following year will determine if inspections should be on an annual or other calendar basis.

Heat Exchangers will be under positive pressure from the water side compared to the glycol side. The pressure gages in the upper control room show water pressure and glycol pressure, flow will be adjusted to insure that the water pressure will be higher than the glycol pressure.

2.8 GLYCOL TESTING

A simple glycol presence test is:

1. Chemical - Visual Colorimetric test

   The best choice for a test to be performed in the field must be specific, sensitive, rapid, uncomplicated, and use stable reagents.

   If specificity is not required, there is one test which is outstanding in other respects. This test is detection of a yellow to red color change with ammonium ceric nitrate. The procedure is as follows: 3 droppers of reagent are transferred to each of two stoppered 25 ml volumetric flasks; sample water and tap water are added to the marks; the two flasks are stoppered and mixed, then compared against a well lighted white background. A redder color in the sample flask indicates the presence of glycol in the sample. Sensitivity is about 5 ppm, but will depend upon the character of the water and the eye sensitivity of the observer. Samples of water from the installation will be obtained, and a test for glycol will be performed in a commercial laboratory once a year.
   (ref. pg. 39ff in Snell and Snell, Vol. 3)

2. Mechanical

   The heat exchanger can be isolated, a pressure time test such as performed on car radiators will be performed once a year.

3. DRAWING LIST
(Appendix "B")

Title	Number
Solar Panel System and Layout	Six Drawings (un-numbered)
7500 Gal. Holding Tank	C7802-1825
Holding Tank, Section "A-A"	Un-numbered
Heat Dump Arrangement	UL-1001
Upper Level Mechanical Room	UL-1000
Lower Level Mechanical Room	M-1000
Electrical Line Diagram	E-1000
Solar Panel Manifold Assembly	R-1000
Roof Assembly Details	R-1010
Solar System Schematic	20001-SK-1

UPDATED SYSTEM PERFORMANCE DATA REVISED FROM ORIGINAL CALCULATIONS

Month	Incident Radiation*	Space Heating Load (10^8 Btu)	Hot water** Load (10^8 Btu)	Solar Fraction of Total Load
Jan.	979	4.50	-----	0.15
Feb.	1215	4.14	-----	0.19
Mar.	1441	3.17	-----	0.30
Apr.	1556	2.10	-----	0.49
May	1641	-----	2.19	0.50
June	1697	-----	2.12	0.52
July	1723	-----	2.19	0.53
Aug.	1672	-----	2.19	0.51
Sept.	1647	-----	2.12	0.50
Oct.	1475	2.00	-----	0.51
Nov.	1179	2.58	-----	0.29
Dec.	903	4.00	-----	0.15
ANNUAL		22.49	10.81	0.34

*Collector Area = 4899 sq. ft. net
Tilt = 40°
Azimuth = 20° East

**Delivery Temperature = 140° F
Hot water load for rooms in main building, kitchen, laundry

MAJOR PROBLEMS ENCOUNTERED AND RECOMMENDED SOLUTIONS

Our problems could be catagorized into four distinct groupings:

Materials Handling

Installation Techniques

Institutional

Operational Experience

Materials Handling

As part of our obligation, we installed an observation stairway and platform for potential viewers. These items were installed at the end of construction. In reality, we now feel that the stairway should have been constructed and installed prior to any task. It would have afforded rapid, safe access to the roof and eliminated hauling material with ropes and slings.

The solar array should have been divided into two or more sections. This would have permitted aisles perpendicular to the collector rows and eliminated the need to walk about three hundred steps laterally whenever one had to go to another section of the array.

Installation

We found it imperative to sub assemble as much of the manifold sections as possible in our shop prior to field installation. This practice was used for about 70% of the roof piping. For future projects, we suggest that a complete repeating section of collectors and support structure be installed in a shop so that 100% of the piping may be prepared for subassembly with the absolute minimum amount of field layout work.

We suggest that all contractors consider purchasing some of the new equipment available which can drill and pull "T" sections in copper tube or pipe. This type of device eliminates the need for a large number of sweated "T" and can be utilized in areas where it might be difficult to install reducers, etc.

All valves two inches and larger should be flanged instead of screw-type with sweated or brazed adaptors. Present day adaptors are of poor quality and readily leak after installation. A flanged valve costs more than a screwed type, however the labor savings will make up for the increased material costs.

Institutional

All institutional problems affected the cost of the project. This particular project tried to obtain as much publicity as possible. Management felt that since this was a public demonstration program, we should obtain all available press and television coverage. During the course of the project, there were at least ten newspaper articles and about seven television presentations on our progress. As a result of all of this publicity, every union shop business agent in our geographic area visited to be certain "that his union would get their portion of the job." Since our hotel is a union shop facility, we could not afford to risk a local strike or demonstration as the hotel would be closed by our own union staff. Our project became the jurisdictional test case for the iron workers, steam fitters, sheet metal men, etc. Some of these jurisdictional disputes had to be settled in Washington, D.C. at the unions international level. All of this resulted in a 14% overrun rather than anticipated 15% underrun. There were certain phases of this project which were to be manned by hotel labor at $5.00 per hour rather than outside union labor at $21.00 per hour. Naturally once a union group won a jurisdictional dispute they had no desire to allow any other group to do their work. Our recommendation, therefore, is to shun any publicity prior to completion of the project. In this way it might be possible to prevent the type of situation that faced Cherry Hill Inn.

It would be desirable to allow for some type of escalation in the cooperative agreements. Our estimates were prepared about a year before contract negotiations and about 18 months before orders were placed. During this period of time prices escalated about 15-18 percent. Needless to say, we have not been granted an increase to date from DOE.

Another problem area had to do with progress payments. It was not unusual to wait ninety days for a progress payment and sometimes we had to wait one hundred twenty days. A small businessman is not in a position to carry invoices for this length of time. As a result, he is forced to borrow money to complete the project or must scale down his progress to meet the DOE actual payment plan. The plan as it presently operates is not geared to the small business situation but is more designed for a business that could absorb and live with the unanticipated delays associated with a federal contract.

Operational Experience

After the system became operational we discovered that the insulation in the collector (located around the bottom of the "hairpins" and in the vicinity of the "pigtail") could get wet and wick into the foam rubber insulation. General Electric ran some tests and concurred. Presently they are sealing all non-weather tight openings with silicon caulk.

There was some collector vacuum tube breakage experienced just after installation. This was due to the fact that the insulator installers turned some valves off and caused some collectors to locally stagnate. When the valves were returned to their proper position, a number of collector tubes broke. Presently we are in the process of removing all valve handles to prevent a future occurance. We also intend to lock the main and auxiliary circuit breaker boxes to prevent unauthorized personnel from tampering with the system.

Operating experience now suggests that the P1/P1a-P2/P2a time delay be adjusted as follows:

April - October 2 minutes
November - January 25 minutes
February 5 minutes
March 20 minutes

However, if a major cold spell (15°F or lower) is anticipated, the time delay should be adjusted to 5 minutes. This will prevent the potential of freezing the water side of the heat exchanger if, for example, snow covers the collectors and the solar integrators turn the system on (sunny day) circulating sub-freezing glycol. If the P2/P2a pump did not circulate water it might be possible to freeze the water side of the heat exchanger.

APPENDIX "A"

WATSON McDANIEL COMPANY

STYLE B

PRESSURE REGULATING VALVE

FOR AIR OR WATER
INSTALLATION AND OPERATING INSTRUCTIONS

INSTALLATION: Before installing the pressure regulating valve, be sure to blow out the pipe line, removing all dirt, pipe scale, pipe chips, etc.

Watson McDaniel Company recommends a "Y" type strainer be placed in the line on the inlet side of the pressure regulating valve. A by-pass line with hand shutoff valves and gauges should also be installed around the regulating valve, as shown in sketch below.

Install the pressure regulating valve in a straight run of pipe away from any meters, tees, elbows or flow turbulence that will affect good regulation.

The valve body is marked with an arrow to show direction of flow.

Install the Style B pressure regulating valve in a horizontal run of pipe with the adjusting screw above the center line of the pipe. However, if head room is scarce, the second best position is to install the valve in an inverted position with adjusting screw pointing downward. (WARNING: The Style B valve should not be installed in a vertical run of pipe because the weight of parts will interfere with good regulation.)

OPERATION: The Style "B" pressure regulating valve is single seated, balanced, tight closing for dead end service. It is a self-contained valve, therefore, both high pressure and low pressure sensing ports are integral in the valve body casting. (no external sensing line is necessary.) The outlet pressure (Controlled Pressure) acts directly on the underside of the diaphragm and exerting a force to oppose the spring downward force, thereby controlling the desired pressure setting.

On start up, be sure all tension is off the spring by turning the adjusting screw counter-clockwise. Check to see that the by-pass valve is CLOSED and hand valves in front and back of the regulator are open; also that the inlet pressure gauge is reading line pressure and the downstream pressure gauge is reading approximately zero or back pressure. By turning adjusting screw slowly clockwise, the desired controlled pressure can be obtained. After the desired pressure is reached, the locknut on the regulating screw should be tightened to assure holding the set pressure and prevent tampering.

This instruction sheet is intended as general information and not to be interpreted as specific information on any particular application.

If after reading above instructions and you are uncertain as to the products adaptability for your application, please call the factory or authorized factory representative before installing or using the product.

Watson McDaniel Company recommends that the pressure regulating valve be installed as shown in the sketch below and with a pressure relief or safety valve on the downstream side (Low Pressure) of the control valve.

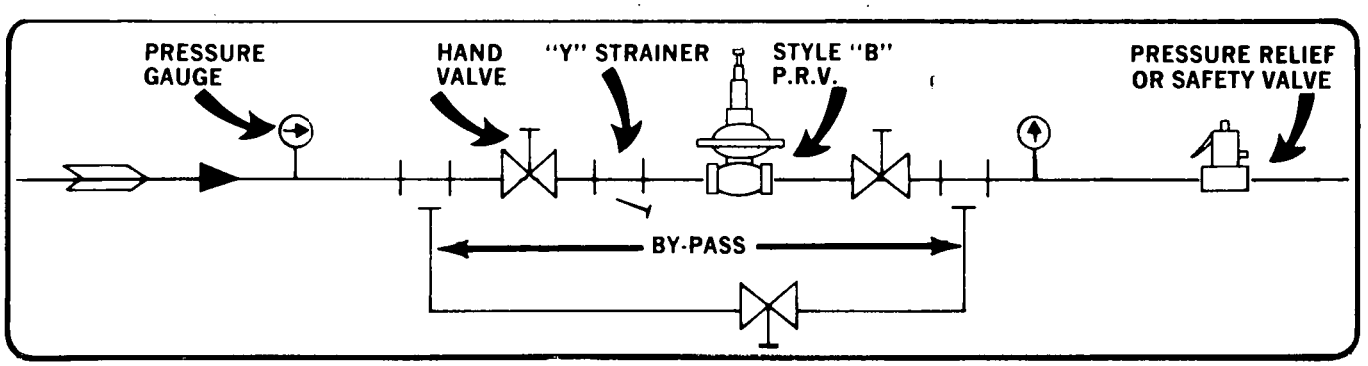

WARRANTY

Each Watson McDaniel Company Product is warranted against defects in material and workmanship for one year from date of shipment. This warranty extends to the first retail purchaser only. All defective material must be returned to the person from whom you purchased the Product, transportation prepaid, free of any liens or encumbrances, and if found to be defective will be repaired free of charge or replaced, at the warrantor's or seller's option. If the material is replaced, any replacement will be invoiced in the usual manner and after inspection of alleged defective material an adjustment will be made for depreciation caused by purchaser use. In no event will Watson McDaniel Company be liable to do m han refund the original contract price.

Incidental and consequential damages are excluded, whethe. under this warranty or otherwise. All implied warranties, including warranties or merchantability and fitness for a particular purpose, are disclaimed and excluded.

SCREWED CONNECTION

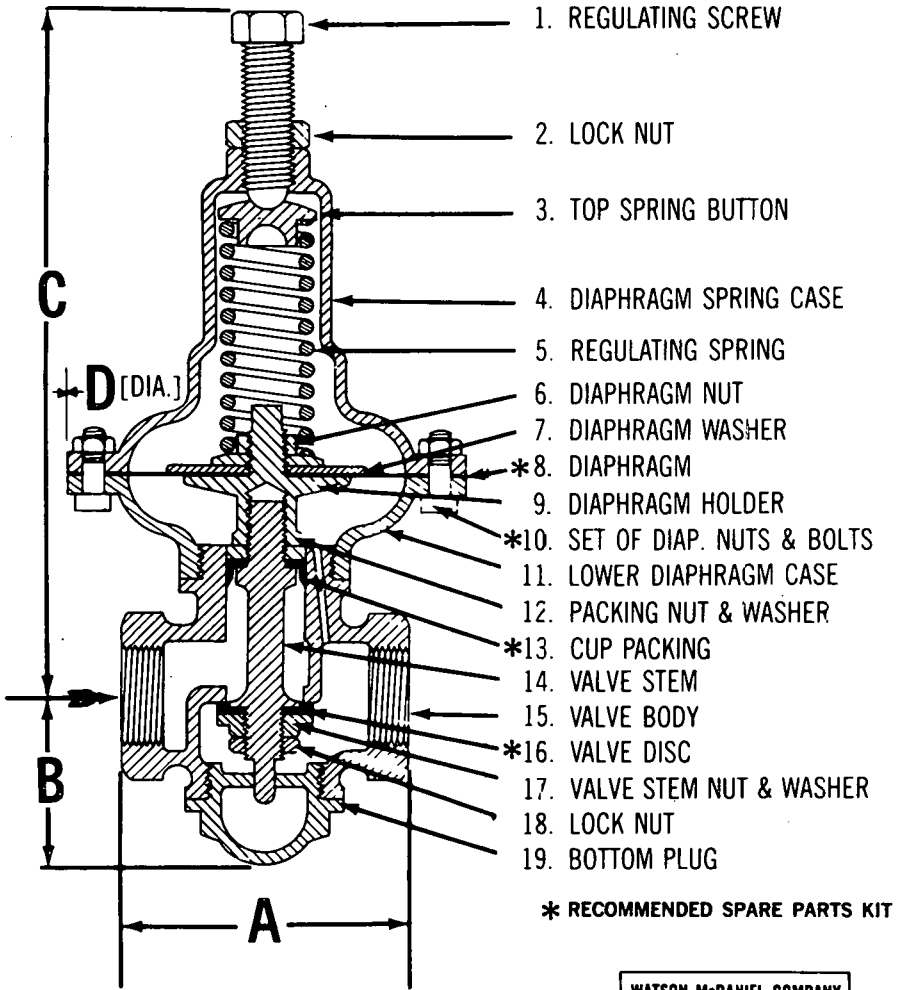

* RECOMMENDED SPARE PARTS KIT

NOTE: WHEN ORDERING PARTS GIVE SERIAL NUMBER OF VALVE

WATSON McDANIEL COMPANY 975 MADISON AVE. VALLEY FORGE CORPORATE CENTER NORRISTOWN, PA. 19401	
STYLE B	
DRAW. A.C. DATE 6-1-73	S-65

FLANGED CONNECTION

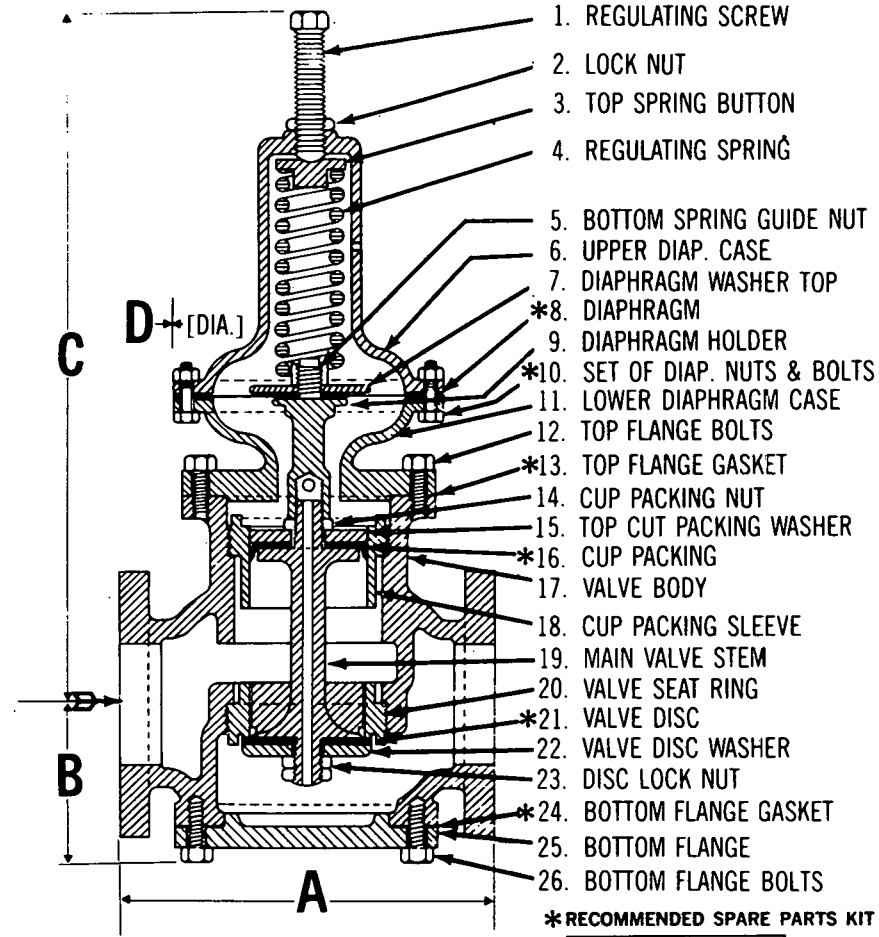

* RECOMMENDED SPARE PARTS KIT

NOTE: WHEN ORDERING PARTS GIVE SERIAL NUMBER OF VALVE.

WATSON McDANIEL COMPANY 975 MADISON AVE. VALLEY FORGE CORPORATE CENTER NORRISTOWN, PA. 19401	
STYLE B	
DRAW. A.C. DATE 6-1-73	F-65

SIZE AND DIMENSIONS						
SIZE	A	B	C	D		

CERTIFIED THAT DIMENSIONS ARE CORRECT: _____

WATSON McDANIEL COMPANY
975 Madison Avenue, Valley Forge Corporate Center, Norristown, Pa. 19401

JOB: _____

ENGINEER: _____
CONTRACTOR: _____
SUBMITTED BY: _____ DATE: _____
APPROVED BY: _____ DATE: _____

CONBRACO INDUSTRIES, INC.

FORMERLY CONSOLIDATED VALVE INDUSTRIES, INC.

P. O. BOX 125 PAGELAND, SC 29728 803/672-6161

MODEL E.V.A. 25	MODEL E V A 40
115 volt, 60 cycle, current draw locked rotor 2.8 amps, 250 in/lbs-torque 5.5 seconds for 90° rotation, 15% duty cycle.	115 volt, 60 cycle, current draw locked rotor 3.1 amps, 400 in/lbs.-torque 8.5 seconds for 90° rotation, 15% duty cycle.

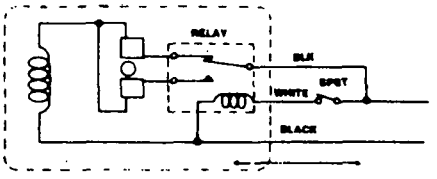

ELECTRIC ACTUATOR WITH
TWO WIRE CONTROL RELAY

NOTES:

Switches: Normally Closed.

Shaft Rotation: Counterclockwise, viewing Actuator at top. Total of 360°.

Manual Override: Counterclockwise, viewing Actuator at top. Total of 180° Travel, but turn 90° On-Off.

Actuators mounted upside-down require special Factory modifications.

WIRING DIAGRAM

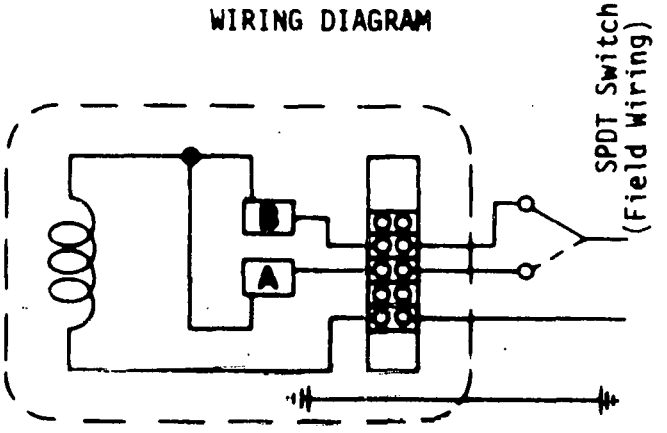

A: Top Switch (Wire to OPEN)
B: Bottom Switch (Wire to CLOSE)

COLOR CODING: EVA 25 & EVA 40

VOLTAGE	"A" TOP SWITCH	"B" BOTTOM SWITCH
115 VAC	RED	BLUE
24 VAC	ORANGE	BLUE
220 VAC	YELLOW	BLUE
24 VDC	BROWN	BLUE

GREEN WIRE IS GROUND

NOTE: FOR LIGHT INDICATION, ETC., CONNECT WIRING TO OPERATION CIRCUIT TERMINALS.

ELECTRIC ACTUATOR MOUNTING INSTRUCTIONS

1. Begin assembly by insuring Ball Valve is in the OPEN POSITION.
2. Remove Lever Nut "A" and Lever "B". (Fig. I)
3. Place Coupling "C" over Stem and assemble with Lever Nut "A". (Fig. II)
4. Remove all four (4) Body Bolts "D" and Lock Nuts "E". Place Bracket "F" in position over End Cap. (Fig. III) Replace all four (4) Body Bolts "D" and torque Lock Nuts "E" to proper torques as shown in Table One.
5. AT THIS POINT, INSURE BALL VALVE IS STILL IN THE OPEN POSITION.
6. Turn Manual Override Shaft on Actuator to align arrows (Stamped on top end of Manual Override Shaft) so that they indicate the OPEN position on the Actuator. Place Actuator onto Bracket "F" while engaging Shaft into Coupling "C" and secure with four (4) Hex Head Screws "G". (Fig. III)
7. Actuated Ball Valve is now ready for electrical wiring. See Wiring Diagram for proper installation.

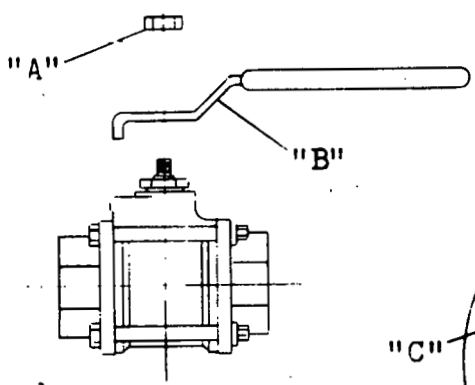

Fig. I

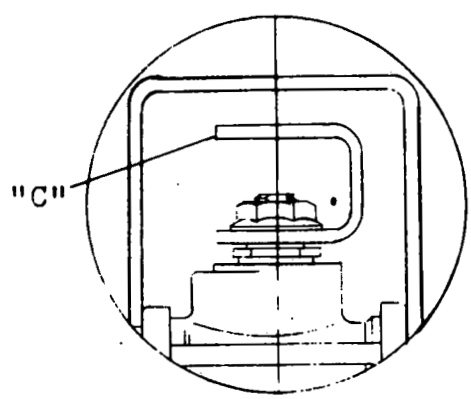

Fig. II

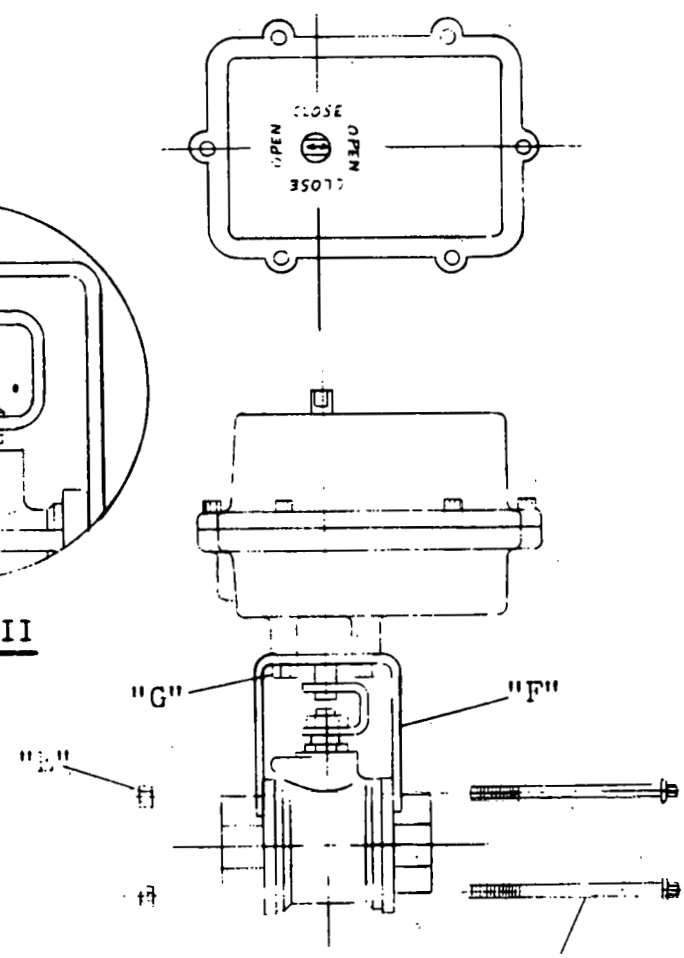

Fig. III

TABLE ONE
(Body Bolt Torques)

VALVE SIZE	TORQUE*
1/4" TO 1"	30
1¼" TO 1½"	75
2"	100

*Torque - Inch Lbs.

This page has been removed due to copy restrictions. For information on 2" Bore 90° Ball Valve Actuators contact Conbraco Industries, Inc., Matthews, NC.

BVA-3S

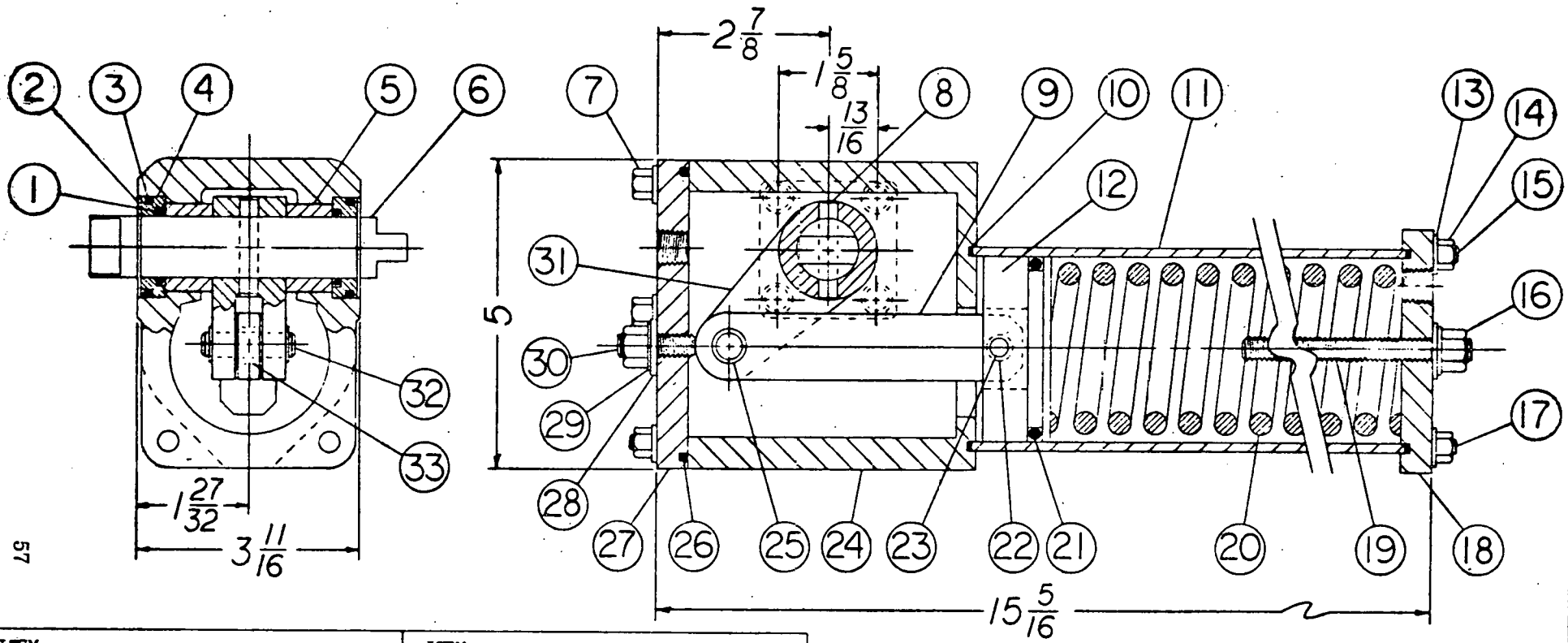

ITEM NO	PART NO.	DESCRIPTION	QTY
1	1-0676	O-RING, O.D.	2
2	1-0499	SNAP RING	2
3	1-0677	O-RING, I.D.	2
4	1-0611	CARTRIDGE	2
5	1-0473	BEARING	2
6	1-0469	SHAFT	1
7	1-0496	HEX CAP SCREW	4
8	1-0502	LEVER PIN	1
9	1-0468	CONNECTING ROD	1
10	1-0484	TUBE SEAL	2
11	1-0472-2	TUBE	1
12	1-0476-2	PISTON	1
13	1-0490	WASHER	10
14	1-0491	HEX NUT	6
15	1-0467-3	STUD	2
16	1-0493	HEX NUT	2
17	1-0467-4	STUD	2

ITEM NO	PART NO.	DESCRIPTION	QTY
18	1-0466	BLIND END COVER	1
19	1-0492	STOP SCREW	1
20	1-0489	SPRING	1
21	1-0486	PACKING	1
22	1-0485	BUSHING	1
23	1-0475	DOWEL	1
24	2-0030	ACTUATOR BODY	1
25	1-0497	SNAP RING	2
26	1-0498	GASKET	1
27	1-0464	BODY COVER	1
28	1-0495	SEAL WASHER	2
29	1-0494	WASHER	2
30	1-0497	STOP SCREW	1
31	1-0471	LEVER	1
32	1-0470	WRIST PIN	1
33	1-0474	BUSHING	1

SEAL KIT PARTS:

ITEM NO	PART NO.	DESCRIPTION	QTY
1	1-0677	O-RING, O.D.	2
2	1-0499	SNAP RING	2
3	1-0676	O-RING, I.D.	2
10	1-0484	TUBE SEAL	2
21	1-0486	PACKING	1
28	1-0495	SEAL WASHER	2

CONBRACO INDUSTRIES, INC. MATTHEWS, N.C. PAGELAND, S.C.

DATE | SCALE N.T.S. | DRAWN BY W.B.T. | APPROVED BY

TITLE BVA-3S ACTUATOR

DATE 1-24-78 | DRAWING NUMBER AIROYAL No. 2-0386 | REV

ELECTRIC ACTUATOR-MOUNTING INSTRUCTIONS

1. Begin assembly by insuring Ball Valve is in the OPEN POSITION.

2. Remove Lever Nut "A" and Lever "B". (Fig. I)

3. Place Coupling "C" over Stem and assemble with Lever Nut "A". (Fig. II) (NOTE: On Valve sizes 1¼" and larger, kits contain one (1) washer to be placed between the Coupling "C" and Lever Nut "A" (Fig. II))

4. Place Bracket "D" on Valve Body Mount Pads and center large hole over the Stem. Secure with two (2) Socket Head Cap Screws "E". (Fig. II)

5. AT THIS POINT, INSURE VALVE IS STILL IN THE OPEN POSITION.

6. Turn Manual Override Shaft on Actuator to align arrows (Stamped on top end of Manual Override Shaft) so that they indicate the OPEN position on the Actuator. Place Actuator onto Bracket "D" while engaging Shaft into Coupling "C" and secure with four (4) Hex Head Screws "F". (Fig. III)

7. Actuated Ball Valve is now ready for electrical wiring. See wiring diagram for proper installation.

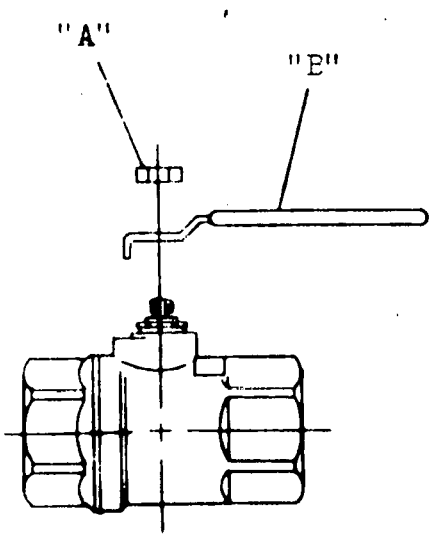

Fig. I

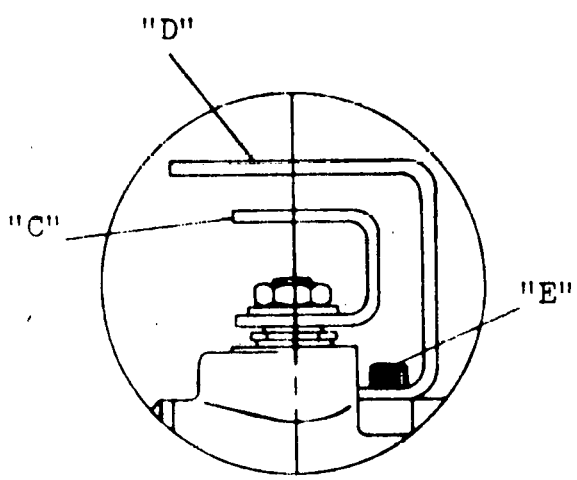

Fig. II

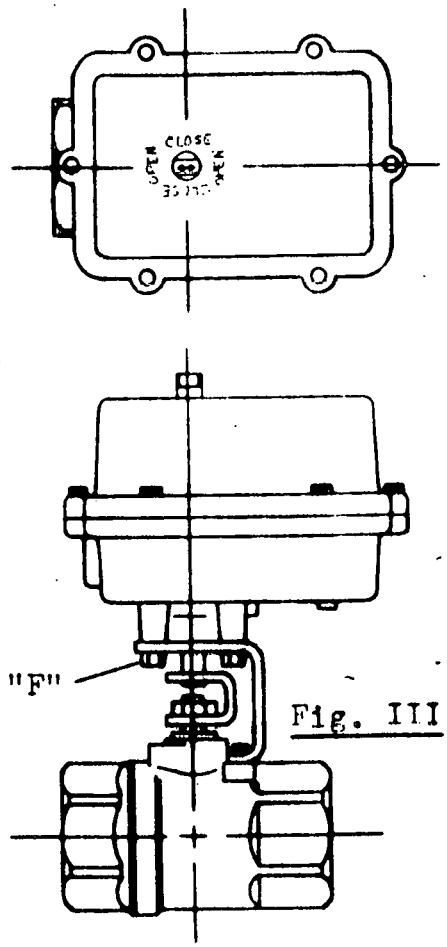

Fig. III

CONBRACO INDUSTRIES, INC.

FORMERLY CONSOLIDATED VALVE INDUSTRIES, INC.

P. O. BOX 125 PAGELAND, SC 29728 803/672-6161

MODEL E V A 25	MODEL E V A 40
115 volt, 60 cycle, current draw locked rotor 2.8 amps, 250 in/lbs-torque 5.5 seconds for 90° rotation, 15% duty cycle.	115 volt, 60 cycle, current draw locked rotor 3.1 amps, 400 in/lbs.-torque 8.5 seconds for 90° rotation, 15% duty cycle.

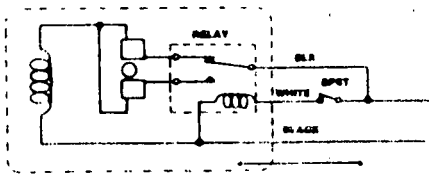

ELECTRIC ACTUATOR WITH TWO WIRE CONTROL RELAY

NOTES:

Switches: Normally Closed.

Shaft Rotation: Counterclockwise, viewing Actuator at top. Total of 360°.

Manual Override: Counterclockwise, viewing Actuator at top. Total of 180° Travel, but turn 90° On-Off.

Actuators mounted upside-down require special Factory modifications.

WIRING DIAGRAM

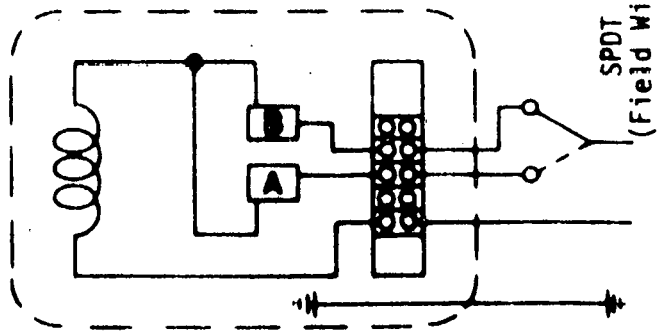

A: Top Switch (Wire to OPEN)
B: Bottom Switch (Wire to CLOSE)

COLOR CODING: EVA 25 & EVA 40

VOLTAGE	"A" TOP SWITCH	"B" BOTTOM SWITCH
115 VAC	RED	BLUE
24 VAC	ORANGE	BLUE
220 VAC	YELLOW	BLUE
24 VDC	BROWN	BLUE

GREEN WIRE IS GROUND

NOTE: FOR LIGHT INDICATION, ETC., CONNECT WIRING TO OPERATION CIRCUIT TERMINALS.

PNEUMATIC ACTUATOR MOUNTING INSTRUCTIONS (AIR-TO-AIR)

1. Begin assembly by insuring the Ball Valve is in the OPEN POSITION.

2. Remove Lever Nut "A" and Lever "B". (Fig. I)

3. Place Coupling "C" over Stem and assemble with Lever Nut "A". (Fig. II) (NOTE: On Valve sizes 1½" and larger, kits contain one (1) washer to be placed between the Coupling "C" and Lever Nut "A". Fig. II))

4. Place Bracket "D" on Valve Body Mount Pads and center large hole over the stem. Secure with two (2) Socket Head Cap Screws "E". (Fig. II)

5. AT THIS POINT, INSURE THAT THE VALVE IS STILL IN THE OPEN POSITION.

6. Turn Manual Override Shaft on Actuator to align Shaft Flats so that they are parallel with the centerline of the Actuator. Place Actuator onto Bracket "D" while engaging Shaft End (Opposite end of previously aligned Shaft Flats) into Coupling "C" and secure with four (4) Hex Head Screws "F". (Fig. III)

7. Actuated Ball Valve is now ready for air line installations. After air line installations have been completed, cycle Actuated Ball Valve to check the OPEN and CLOSED alignment. If Ball Valve Stem Flats are not parallel to the Valve Body centerline in the OPEN position and are not perpendicular to the Valve Body centerline in the CLOSED position, refer to "Rotation Adjustment" to correct.

PNEUMATIC ACTUATOR (FAIL-SAFE, SPRING RETURN)

1. Through 4. Same as above for Air-To-Air Pneumatic Actuators.

5. For SPRING-TO-CLOSE operation, turn Ball Valve to CLOSED POSITION. Place Actuator onto Bracket "D" while engaging Flats on Manual Override Shaft that are parallel with centerline of Actuator into Coupling "C" and secure with four (4) Hex Head Screws "F". (Fig. III)

6. For SPRING-TO-OPEN operation, turn Ball Valve to OPEN POSITION. Place Actuator onto Bracket "D" while engaging Flats on Manual Override Shaft that are perpendicular to centerline of Actuator into Coupling "C" and secure with four (4) Hex Head Screws "F". (Fig. III)

7. Same as above for Air-To-Air Pneumatic Actuators.

ROTATION ADJUSTMENT

Shaft rotation is regulated by two slotted and threaded screws located at opposite ends of the cylinder. Adjustments are accomplished by turning these screws in or out as follows:

1. Loosen lock nut and turn slotted screw IN TO REDUCE SHAFT ROTATION. After desired position is reached, tighten lock nut. (Fig. III)

2. Loosen lock nut and turn slotted screw OUT TO INCREASE SHAFT ROTATION. After desired position is reached, tighten lock nut. (Fig. III)

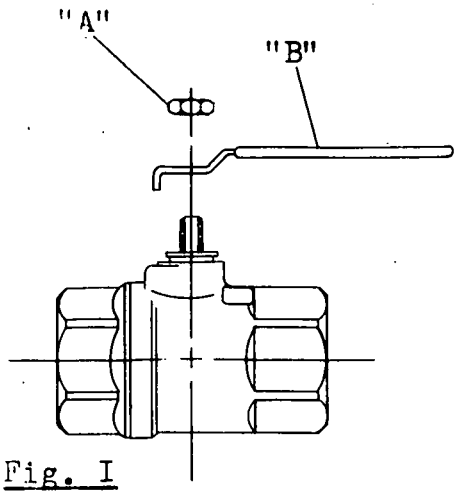

Fig. I

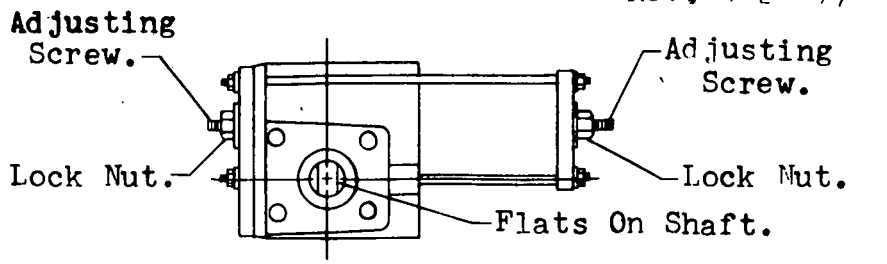

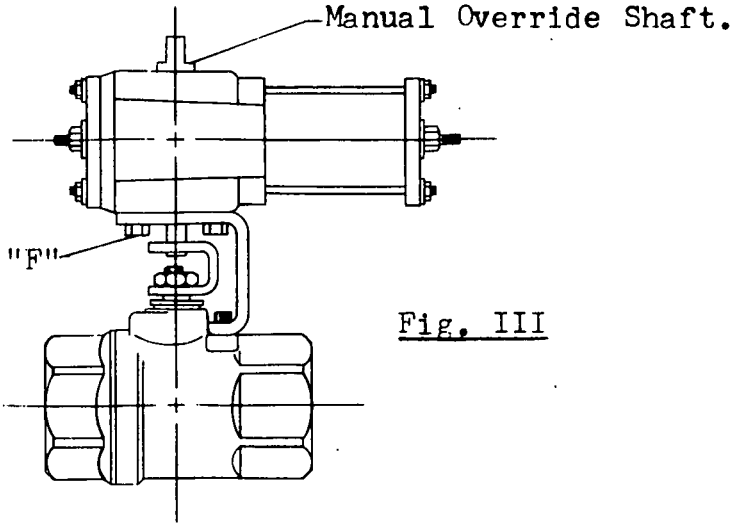

Fig. III

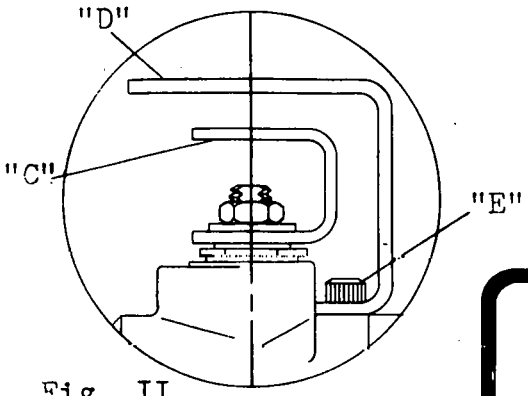

Fig. II

SOLENOID EQUIPPED PNEUMATIC ACTUATORS

Air-To-Air Actuators, when ordered with Solenoids, are equipped with two (2) 3-Way Normally Closed Solenoid Valves. We recommend wiring with Normally Open Push Button Switches. This type installation requires only 3 to 5 seconds opening or closing cycle time and greatly increases the life of the Solenoid Valves. (Wiring Diagram "A")

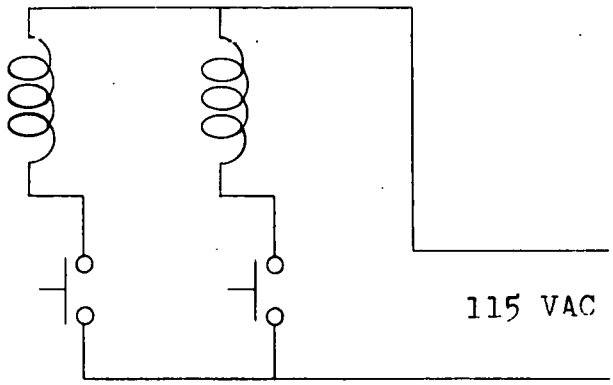

Wiring Diagram "A"

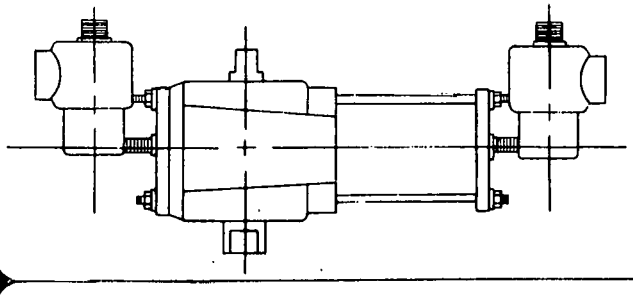

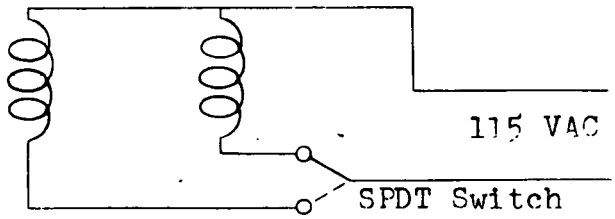

Wiring Diagram "B"

Failsafe, Spring Return Actuators, when ordered with Solenoids, are equipped with two (2) 3-Way Normally Closed Solenoid Valves. A SPDT Switch is required in this installation. (Wiring Diagram "B")

NOTE: IF A MANUAL SELECTOR AIR VALVE IS USED INSTEAD OF ELECTRIC SOLENOID VALVES, A 4-WAY SELECTOR AIR VALVE SHOULD BE USED.

This page has been removed due to copy restrictions. For information on Actuated Ball Values used on Electric and Pneumatic contact Consolidated Valves Industries, Inc., Matthews, NC.

AIOM-776

INSTALLATION, OPERATION AND MAINTENANCE GUIDE FOR APOLLO SERIES

"Apollo"®

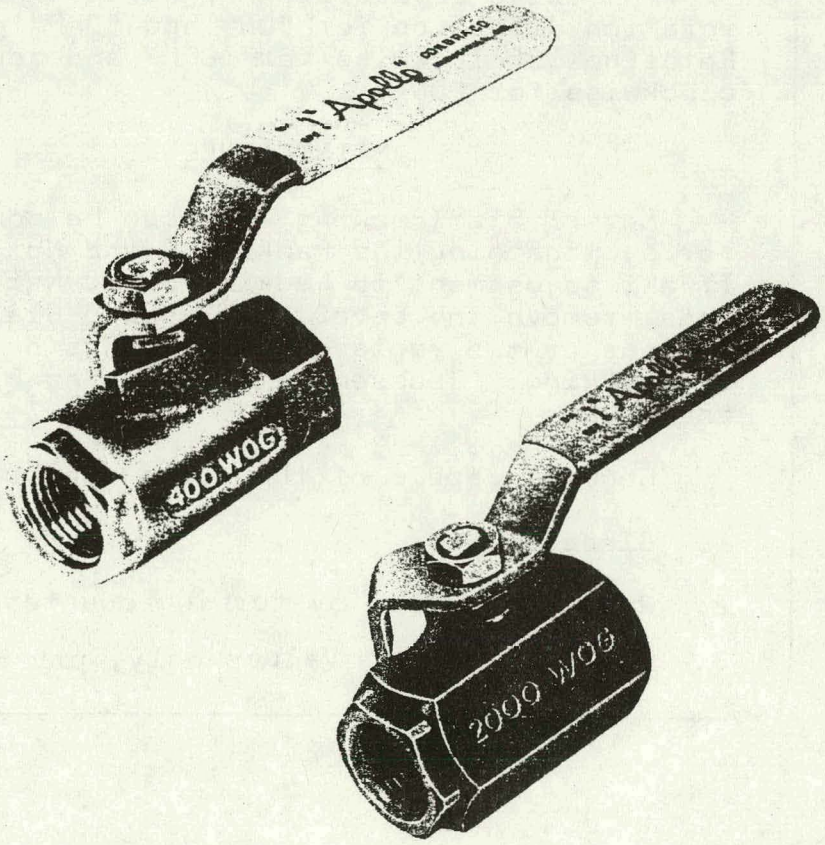

INSTALLATION, OPERATION AND MAINTENANCE OF THREADED APOLLO BALL VALVES

INSTALLATION

1. Pipe connections to be threaded into these Valves should be accurately threaded, clean and free of foreign material or metal shavings.

2. Teflon tape is recommended for use as the pipe joint sealant.

3. Use two wrenches when making the pipe joint. Apply one wrench on the Hex pads nearest the joint being tightened to prevent breaking Body/ Retainer seal. UNION END VALVES: Remove the Union Nut from Valve and place over pipe. Thread Tailpiece onto pipe using a smooth jaw wrench. Thread Union Nut onto Valve Body and LIGHTLY torque.

OPERATION

The Valve Levers are marked showing proper rotation direction for "ON" and "OFF" positions. Rotation is clockwise for "OFF" and counter-clockwise for "ON".

MAINTENANCE

Normal Stem Packing wear can be compensated for by tightning the Packing Gland Nut clockwise. If all adjustment to Packing Gland Nut has been made, remove the Lever and Packing Gland Nut and add one or two replacement bearings on top of the old packing. Reassemble the Packing Gland Nut and Lever.

General repair of the Valve can be made by:

1. Close Valve.

2. Remove Retainer by turning counterclockwise.

3. 1/4" through 1" Valves only, pry out top

Seat being careful not to damage ball. 1-1/4" through 3" Valves: Top Seat will come out with Retainer.

4. Push Ball out of Body with finger.

5. Remove Packing Gland Nut by turning counter-clockwise and push Stem down into body to remove.

6. Remove all Seats and Seals. To facilitate removal of the Stem Packing, cut with knife.

7. Replace all Seats and Seals as furnished in the Service Kits. Inspect Ball and Stem for wear or damage and replace if necessary.

8. Reverse above procedure to reassemble using a sealant on the Retainer threads equivalent to Loctite Hydraulic Sealant.

NOTE: Union End Valves cannot be easily field repaired, therefore it is recommended that the main Valve Section be replaced.

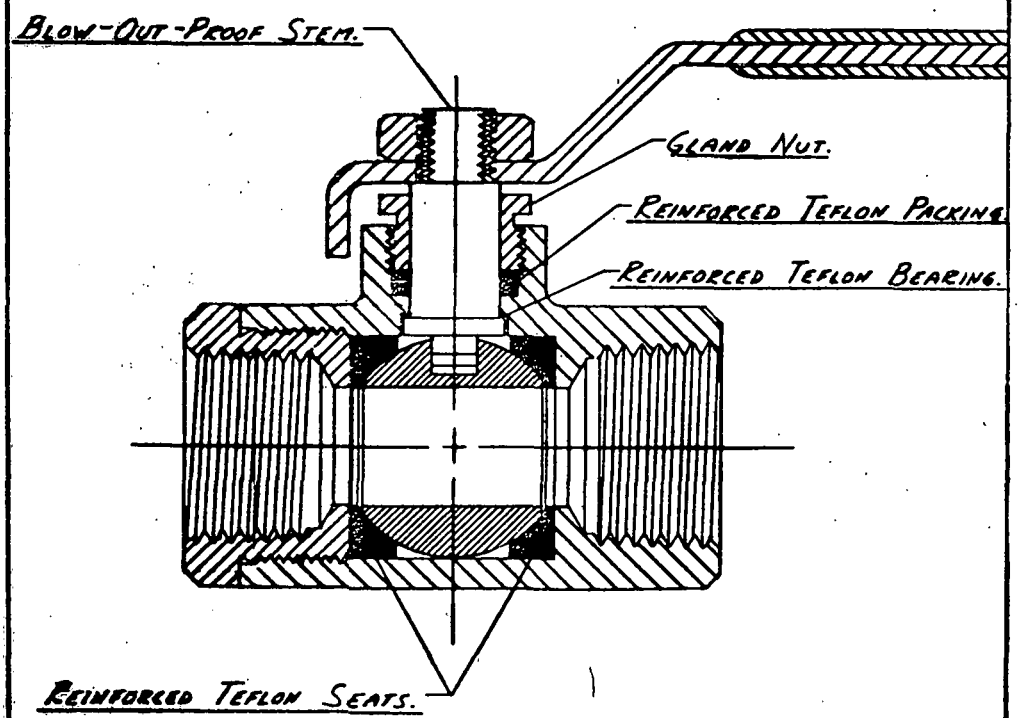

(4)

"Apollo" Ball Valve Division

CONBRACO INDUSTRIES, INC.

P. O. BOX 125 PAGELAND, S. C. 29728 803/672-6161

This page has been removed due to copy restrictions. For information on Actuated Ball Valves used on Failsafe contact Consolidated Valves Industries, Inc., Matthews, NC.

NOTE: DIP SEATS & SEALS IN SILICONE. LOCK RETAINER WITH HYDRAULIC LOCTITE.

No. 71-108-01 B

SERVICE KIT 70-008-01

* SERVICE KIT PART

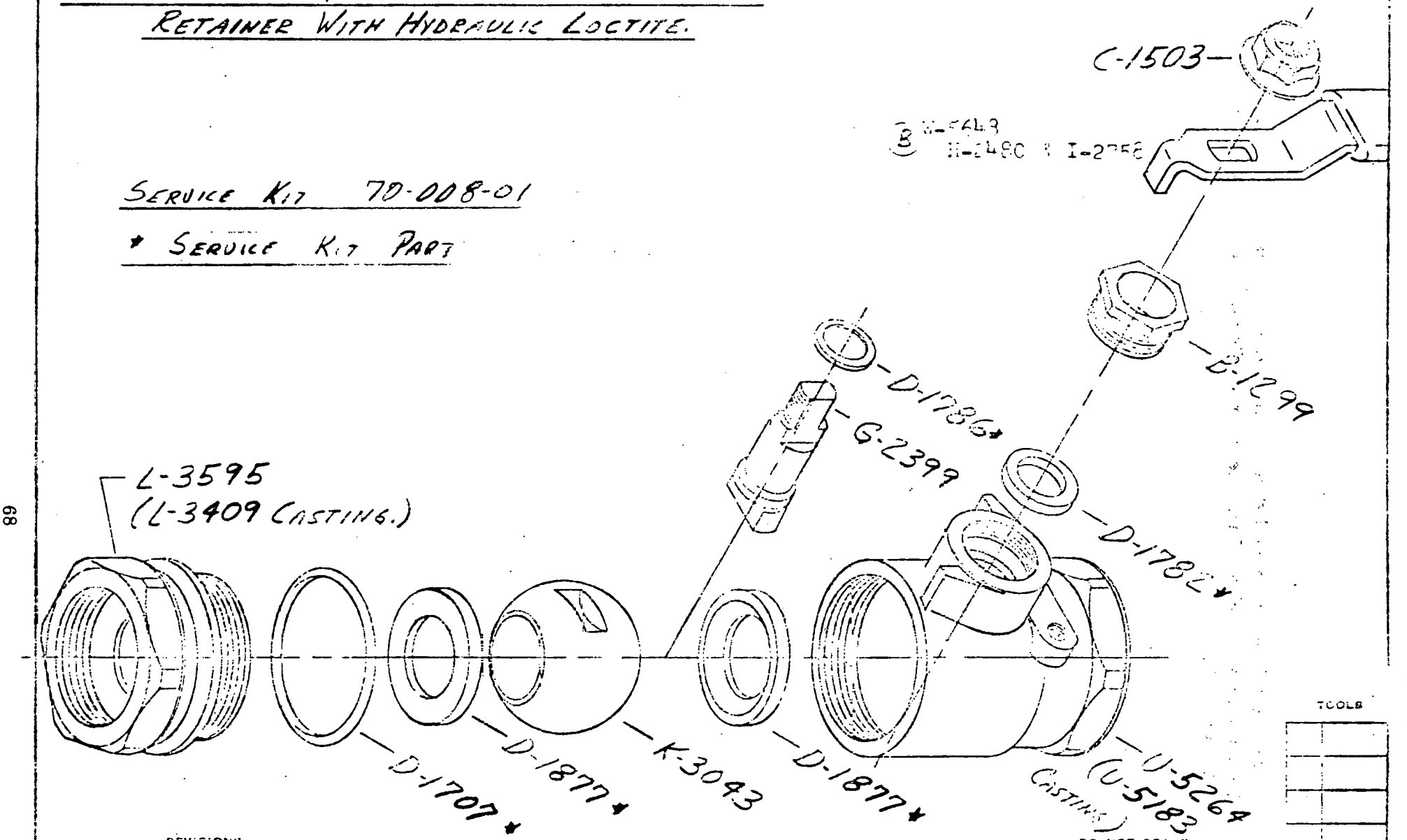

TOOLS

REVISIONS

DO NOT SCALE

NO.	WAS	DATE	NO.	WAS	DATE
A	REV. & REDRN.	1-76			
B	ACCEC	6-28-78			

UNSPECIFIED TOLERANCE
FRACTIONAL ± 1/64
DECIMAL ± .003
ANGULAR ± ½°

DRN BF DATE 1-28-76
CK'D DATE
APPD. DATE

NAME PARTS LIST

USED ON 2" BALL VALVE — TEST AT 100 P.S.I

NONE

CONSOLIDATED BRASS CO.
MATTHEWS, N. C.

DWG. 71-108-01 B

This page has been removed due to copy restrictions. For information on Parts List used on 1 1/2" Ball Valve-Test at 100 P.S.I. contact Consolidated Brass Company, Matthews, NC.

Pages 70 and 71 have been removed due to copyright. For information on Series 1535, Close-Coupled Centrifugal Pumps contact ITT, Bell & Gossett, 8200 N. Austin Avenue, Morton Grove, Illinois 60053.

INSTALLATION AND OPERATION INSTRUCTIONS FOR 1535 PUMP

LOCATION

The pump should be placed as near as possible to the source of supply, particularly when operating with a suction-lift, and located to permit installation with the fewest possible number of bends or elbows in the suction pipe. The maximum suction-lift should not exceed 15 feet, including friction losses.

FOUNDATION

The Series 1535 pump, being mounted on its motor, needs no special foundation. However, it is well to provide a solid concrete base.

PIPING

Be careful that the pump and motor are not sprung out of alignment by the weight of the piping. The pipes should be supported by suitable hangers and *not by the pump.*

It is important that air be kept out of the system. On an open system always place the end of the suction pipe at least 3 feet below the surface of the water in the suction well to prevent air from being drawn into the pump. Avoid air pockets in the suction line and make sure that each section of the suction pipe is absolutely air tight. Where there is suction-lift, horizontal runs of suction piping should slope downward from the pump toward the suction well *but never upward.*

Install a gate valve and a check valve in the discharge pipe close to the pump. The check valve should be between the gate valve and the pump discharge nozzle. The gate valve can be used to control the capacity of the pump or to shut off the discharge line while repairs are being made. The function of the check is to protect the pump casing from breakage that might occur due to the action of water hammer. Install a foot-valve on the bottom of the suction-pipe to keep pump primed.

PRIMING

DO NOT RUN PUMP DRY. Before starting, these pumps must be filled with water and the air removed from the casing by unscrewing the plug in top of the volute shell. After the pump has been filled, turn the shaft a few times by hand to allow all air to escape and if necessary add more water. The gate valve in the *discharge* should be kept closed until the pump is running at full speed and then gradually opened. Once the casing and suction pipe have been primed, a small by-pass around the check valve in the discharge line may be used to keep the pump full of water and thus compensate for leakage through the foot-valve.

When the pump is primed from an independent source, a ¼ inch pipe line controlled by a valve may be connected to the top of the volute shell.

Do not attempt to prime a pump while it is running by letting water into it through its discharge. This is an unsatisfactory method that could damage the pump or motor or possibly blow out a fuse.

To facilitate priming and draining, plugs in top and bottom of volute casing may be replaced by ⅛ inch cocks or valves.

LUBRICATION INSTRUCTIONS

Lubricate the motor with a good grade soda-soap grease at least once a year.

To grease the front bearing force grease in the alemite fitting at the top till new grease is observed coming out the bottom vent.

To grease the rear bearing use a screwdriver to remove the snap in blank at the end of the shaft. Remove the old grease and repack with new grease.

HOW TO SERVICE YOUR 1535 CENTRIFUGAL PUMP

1. Close valve leading to supply-side of pump (If no valve has been installed, it may be necessary to drain the system).
2. Detach motor from pump volute by removing eight cap-screws from center body-flange.
3. Remove impeller from motor-shaft (First turning impeller-nut counter clockwise).
4. Lift off seal-spring—then place screwdriver point under top compression ring of seal and pry off. Seal can then be removed by pulling upward.
5. Be sure that the shaft is thoroughly cleaned then lubricate with a thin film of oil or water and push the replacement seal on as far as possible by hand. Next, using a screwdriver press down firmly all around the outer edge of the top compression ring until the seal is tight against the face of the remite insert. If end play is present push the seal on tighter.
6. Replace impeller on shaft making certain that impeller-nut is firmly tightened. The motor can then be reassembled into pump volute and placed in service.

OPERATING THE PUMP

1. Be sure to operate the pump in the proper direction. All B & G Centrifugal pumps run clockwise when looking at the pump from the motor end. All pumps are provided with arrows showing direction of rotation.
2. Liquids having a temperature near the vaporization point cannot be raised by suction. There must be a positive suction-head depending upon the operating temperature and pressure at the suction nozzle of the pump. When pumping liquids having a viscosity appreciably different from water, a positive suction-head is required.
3. When there is danger of freezing, remove drain plugs at top and bottom of volute shell and drain thoroughly.
4. Keep motor bearings lubricated.
5. Do not disassemble pump unless absolutely necessary as impeller has been accurately adjusted and tested before leaving factory.
6. Ask for information or help if trouble is experienced that cannot be rectified since this pump is guaranteed to operate as recommended.
7. If pumps are to be idle for a very long period of time the interior of the volute should be cleaned and oiled. This prevents parts from rusting together and assures a longer period of satisfactory operation.
8. The motor should be protected against overload and under-voltage. Control devices for this purpose can be obtained at a very low cost. They are inexpensive insurance.

SERIES 1535 CLOSE COUPLED CENTRIFUGAL PUMPS

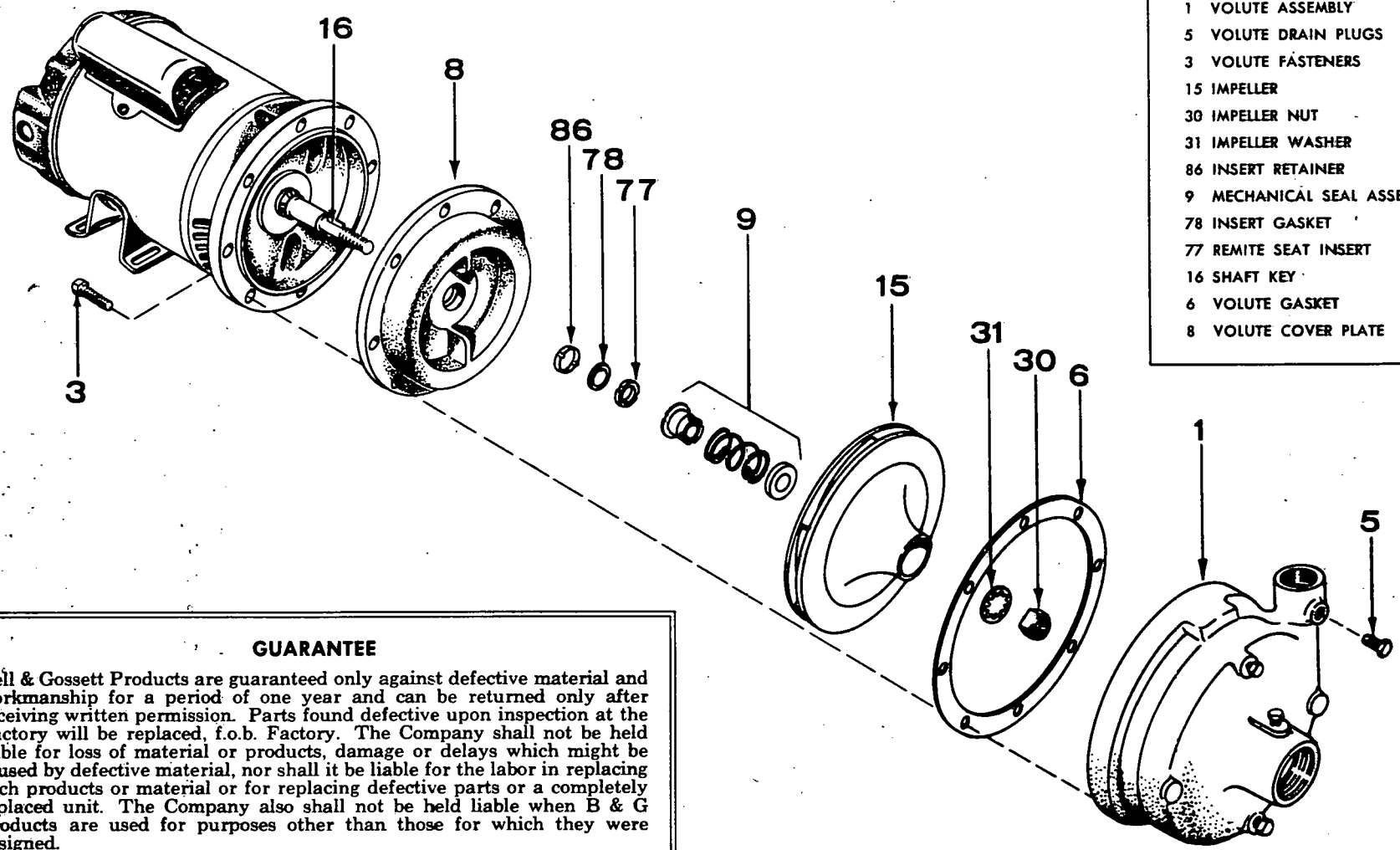

PARTS LIST

1	VOLUTE ASSEMBLY
5	VOLUTE DRAIN PLUGS
3	VOLUTE FASTENERS
15	IMPELLER
30	IMPELLER NUT
31	IMPELLER WASHER
86	INSERT RETAINER
9	MECHANICAL SEAL ASSEMBLY
78	INSERT GASKET
77	REMITE SEAT INSERT
16	SHAFT KEY
6	VOLUTE GASKET
8	VOLUTE COVER PLATE

GUARANTEE

Bell & Gossett Products are guaranteed only against defective material and workmanship for a period of one year and can be returned only after receiving written permission. Parts found defective upon inspection at the Factory will be replaced, f.o.b. Factory. The Company shall not be held liable for loss of material or products, damage or delays which might be caused by defective material, nor shall it be liable for the labor in replacing such products or material or for replacing defective parts or a completely replaced unit. The Company also shall not be held liable when B & G Products are used for purposes other than those for which they were designed.

RETURNED GOODS

Written permission must be obtained before returning any material for credit. Material so returned will be subject to a deduction of 10% for rehandling. All transportation charges, including freight and cartage, will be paid by the shipper. Products which are obsolete or made to special order are not returnable.

BELL & GOSSETT COMPANY MORTON GROVE, ILLINOIS

Pages 74 thru 87 have been deleted due to copyrighted information. Contact Bell & Gossett Company, 8200 N. Austin Avenue, Morton Grove, Illinois 60053, for information on the following:

1. Booster and Series "60" In-Line Centrifugal Pumps
2. Stock Sizes Series "60"
3. In-Line Mounted Centrifugal Pumps Series "80"
4. Airtrol System Installation and Operating Instructions.

SOLAR INTEGRATOR INSTALLATION INSTRUCTIONS

APPLICATION

The Solar Integrator is designed to provide a turn-on and turn-off function, as well as a safety delay in the event of a power failure and subsequent loss of collector fluid pumping.

The Solar Integrator controller operates the high performance collector systems by sensing solar insolation rate and energizing two (2) outputs when an average insolation level is surpassed. The first output is provided 5 to 25 minutes after the unit senses a preset sunlight level. The second output is delayed two (2) minutes from the first output to allow for pump staging or fluid-air control. In the event of a power loss and subsequent return of power, the unit will delay the signal outputs until a 15 minute "darkness" period has been sensed. The unit is powered by a 24 Volt A.C. external supply. The outputs are one side of the 24 Volt A.C. line relay-switched under the proper solar conditions (greater than 35 BTU/HR/FT^2 average). The relays are sized to handle a 24 Volt A.C., 2 VA relay or motor starter coil load.

INSTALLATION

Location

The Solar Integrator is normally mounted on top of the solar collector (see 132D6370,* sheet nos. 1 and 5, Figure 1), but may also be remotely mounted. For either type of mounting, the sensor face of the unit must be parallel to the collector field, the mounting bracket attached to the controller must be oriented horizontally. The controller must not be located where an obstruction (chimney, tree, smoke stack, ect.) will shadow the sensor during any part of the day and the unit must not lie in the beam of a high intensity light (floodlight) during darkness.

*See note on page 90.

Mounting and Alignment

1. Mount the adaptor bracket to the collector (132D6370,* Sheet 5, Figure 1).

2. Align the front (see mounting detail drawing 132D6370,* sheet 5, Figure 2) edge of the mounting bracket along the front horizontal edge of the adaptor bracket.

3. Align the mounting bracket slots (as shown on 132D6370,* sheet 5, Figure 2) with the holes on adapter brzcket.

4. Using hardware provided (nuts, bolts, washers), mount package to the bracket. The top edge of the mounting bracket must be aligned with the top of the adaptor bracket.

Wiring

All wiring must agree with applicable local codes. The unit has been designed to operate as a low power, Class 2 circuit allowing the use of wire as small as #22. A 1/2" conduit interface hole is provided on one side of the controller package. Figure 3 on 132D6370,* sheet no. 5, shows a typical wiring connection for the controller.

Remove the four (4) outer screws (nearest to the side of the package) which removes the sensor face.

A terminal strip is located on the electronics board mounted to the sensor face of the controller for the four (4) external wires to the Solar Integrator. It is recommended that color-coded (red, black, white, green) four conductor wire (22 gauge) suitable for outdoor use be used to connect the Solar Integrator.

*See note on page 90.

Wiring Installation

1. Mount package first. Lead the wires through the conduit opening (Figure 3, drawing no. 132D6370,* sheet no. 5). A weatherproof conduit or strain-relief fitting is recommended to maintain the sealing of the controller package.
2. Connect wires to terminal strip as shown. Terminal strips use a rising surface clamp to secure the wire.
3. Re-connect the sensor face to the package.

CHECKOUT

Check that the Solar Integrator controller has been properly installed. Apply power to the unit (wires "R" and "B", 24 Volts A.C.). Upon any application of power, the unit will lockout operation until a period of "darkness" has been sensed.

1. Cover the sensor element completely with a opaque cloth or other opaque material.
2. After a minimum of twnety (20) minutes, remove cloth.
3. Depending on the sunlight level, the first output (W wire, 24 Volts A.C. between W and B) should operate within five (5) to twenty-five (25) minutes.
4. The second output should operate two (2) minutes after the first output ("G" wire, 24 Volts A.C. between "G" and "B").

The glass sensor face should be periodically wiped with a clean soft cloth to remove dirt buildup. The sensor face should be kept clear of abrasive materials.

NOTE: For additional information on Solar Integrator and drawing 132D6370, please contact General Electric Company, Attn: Solartron Product Service, P.O. Box 8861, Philadelphia, PA 19101.

Rho Sigma Integrator Retrofit

INTRODUCTION

Previous Zia units had both photosensor and electronics mounted in a package at the collector field. The Rho Sigma controllers have an electrical package which is mounted indoors, a photosensor which is mounted on the collector and a temperature sensor which is mounted inside the collector.

Figure 1 shows the difference in package wiring. Applying the "R, B, W, G" convention used on the Zia units, the system controls are now wired to a package indoors. Four wires must be run to the roof from the Rho Sigma package. All four go to the photosensor condulet. Two are connected to the photosensor. A black and red dot indicate the required hookup. The black-red convention for the photosensor leads must be maintained to the electronics package (see Figure 2).

The temperature sensor must be clamped (pipe clamp supplied) to a return tube on the serpentine, underneath the glass shroud. A splice shall be made in the collector manifold and two leads (#18) are run to the photosensor condulet. There is no polarity on the temperature sensor.

PROCEDURE FOR RETROFIT

Roof

1. Remove Zia unit.
2. Slide off glass shroud, clamp temperature sensor at least 6" up the return tube of the serpentine. The sensor should be mounted on the last collector (hottest fluid).

3. Splice 2-#18 teflon insulation wires to sensor leads in collector manifold. Run wire out the end of manifold.
4. Remove photosensor condulet from mounting plate. Align plate with collector attachment holes and bolt to the side of the collector near the temperature sensor leads.
5. Bring 4-#18 wires from the Rho Sigma controls package into one side of the condulet, connect photosensor leads to colored-coded terminal board. Use color-coded wire.
6. Splice leads from the temperature sensor to remaining two leads in the condulet. Use water-tight conduit fittings to close both ends.
7. Mount photosensor condulet to mounting plate. Photosensor must "see" the same field of view as the collector.
8. Mount controller package near system controls. Connect photosensor and temperature sensor leads from roof as shown in Figure 2. Add jumpers of Figure 2.
9. Connect "R, B, W, G " leads from system controls as shown in Figure 2.

Fig 1

ZIA

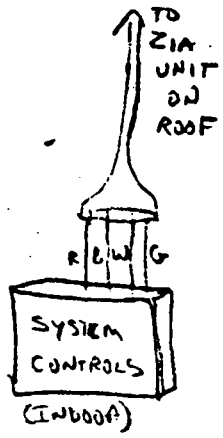

RHO SIGMA

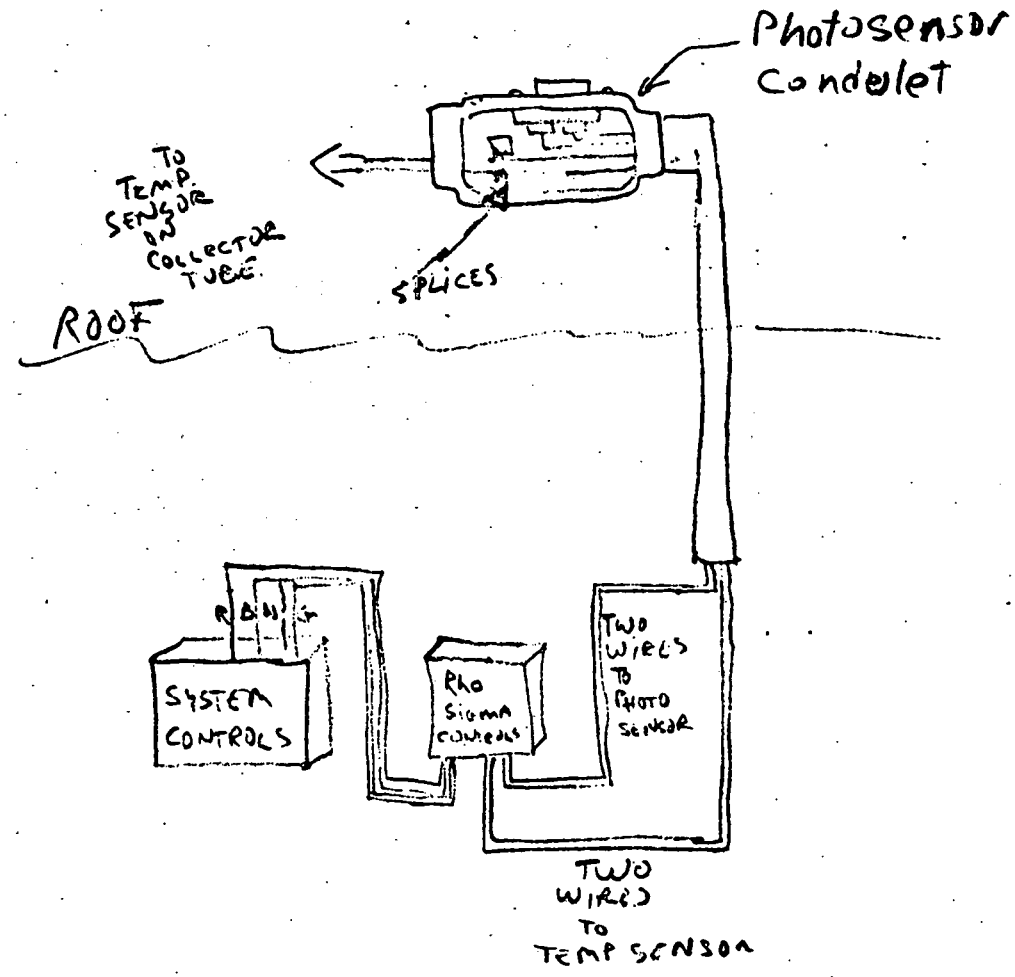

FIG. 2

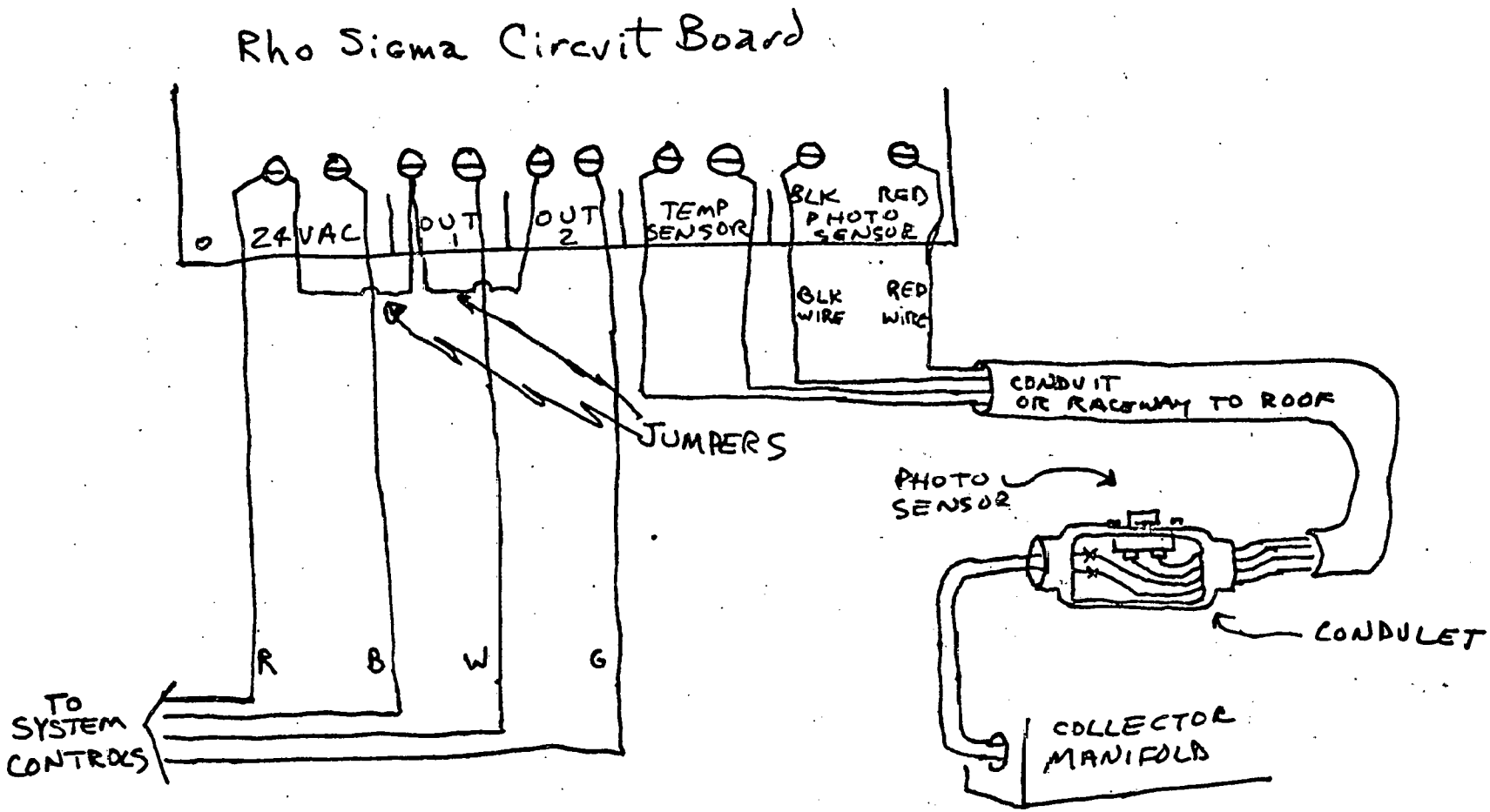

NOTE: BLACK-RED MARKINGS ON CONDULET TERMINAL BOARD. KEEP CONVENTION THRU TO THE CONTROLLER

GENERAL ELECTRIC

VACUUM TUBE SOLAR COLLECTOR SPECIFICATION DATA SHEET
—MODEL TC-100—

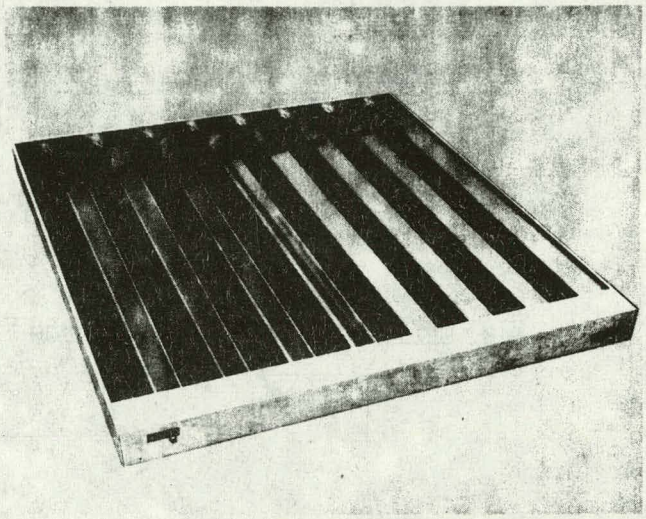

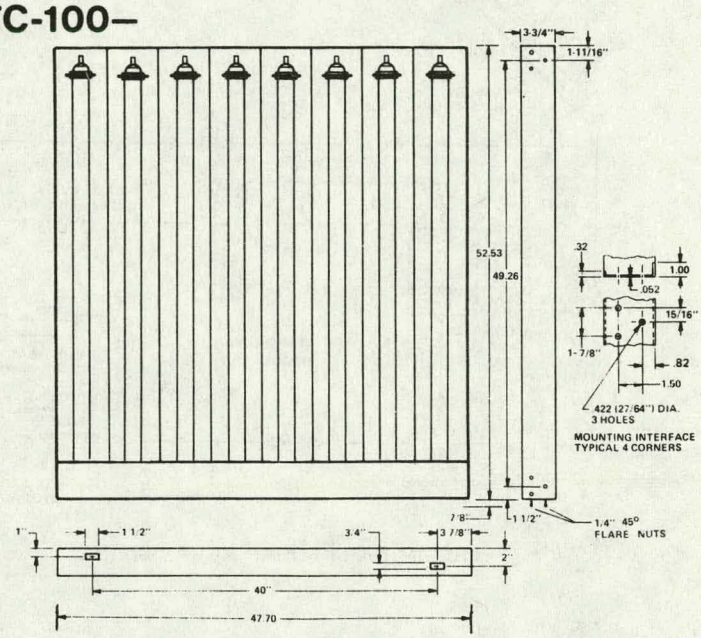

PHYSICAL

WEIGHTS

	British	SI
Frame Only	35 lbs.	16 kg
Glass Installed		
Dry	57 lbs.	26 kg
Wet	59 lbs.	27 kg

OPERATIONAL

	British	SI
Insolation	0 to 400 BTU/ft^2/hr	0 to 108 langleys
Fluid		
Operating Temperature	100 to 300°F	38 to 149°C
Composition	"Good"[1] water with 35/50% Prestone ™	

COMPOSITION

Frame	18 Ga aluminized steel (51.6 mil)
Reflector	Coilzak® aluminum (25 mil)
Insulation	Fiberglass
Fluid Lines	1/4" type L copper
Glass Tubes	008 soda lime

CONNECTIONS

Hydraulic	Brass 1/4" 45° Flare Nut
Structural Attachments	Stainless Steel or aluminum

EQUIPMENT SIZING GUIDELINES

Heat exchanger area		
Heating	.17 ft^2/module	.016 m^2/module
Cooling & Heating	.35 ft^2/module	.033 m^2/module
Storage Volume		
Heating Only	15 gallons/ module	56.8 liters/ module
Cooling & Heating	22 gallons/ module	83.3 liters/ module

MODULE DESIGN CONDITIONS

Pressure Drop-Design	7.0 psi @ 180°F	48.2 kPa @ 82°C
Minimum	5.0 psi	34.5 kPa
Flow Rate	0.22 gpm @ 180°F	0.83 l/m @ 82°C
Wind Velocity (Max)	100 mph	161 km/hr
Ice Load (Max)	13 psf	63.5 kg/m^2
Snow Load (Max)	20 psf	97.6 kg/m^2
Combined Load (Max)	33 psf	161.1 kg/m^2
Maximum System Pressure	80 psi	551 kPa

MODULE AREA

Gross (Frame)	17.4 ft^2	1.62/m^2
Net (Active)	14.8 ft^2	1.38/m^2

---

(1) "Good" Quality Water:

Chlorides	< 100 ppm
Sulfates	< 100 ppm
Bicarbonates	< 100 ppm
Total Hardness	< 250 ppm

TYPICAL DESIGN CONSIDERATION

COLLECTOR LOOP SCHEMATIC

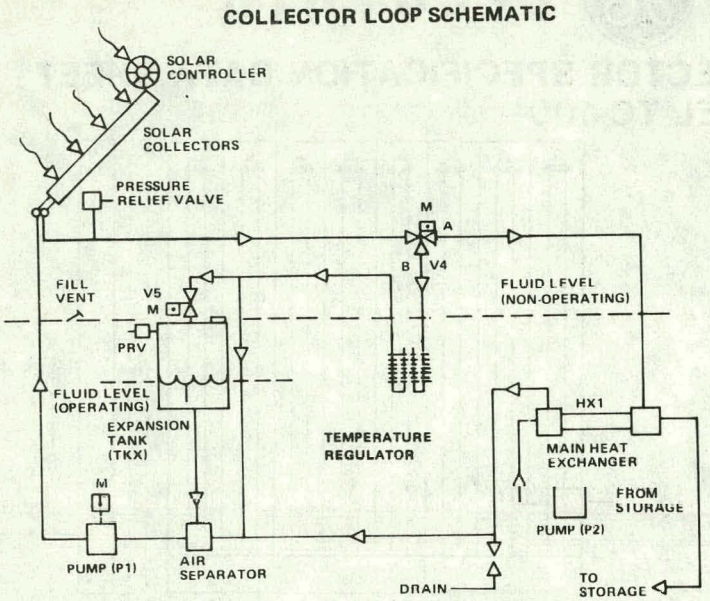

SINGLE ROW PLUMBING CONFIGURATION

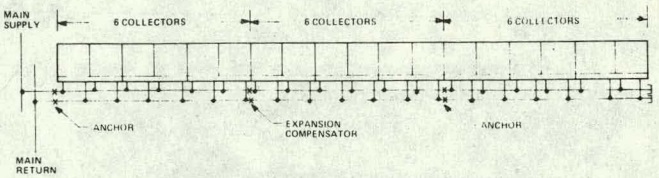

DUAL ROW PLUMBING CONFIGURATION

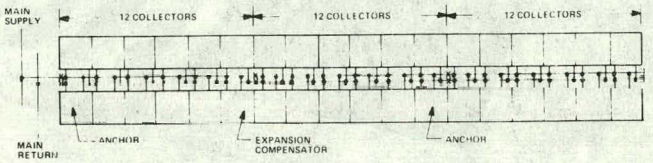

PRELIMINARY SOLAR ARRAY SIZING

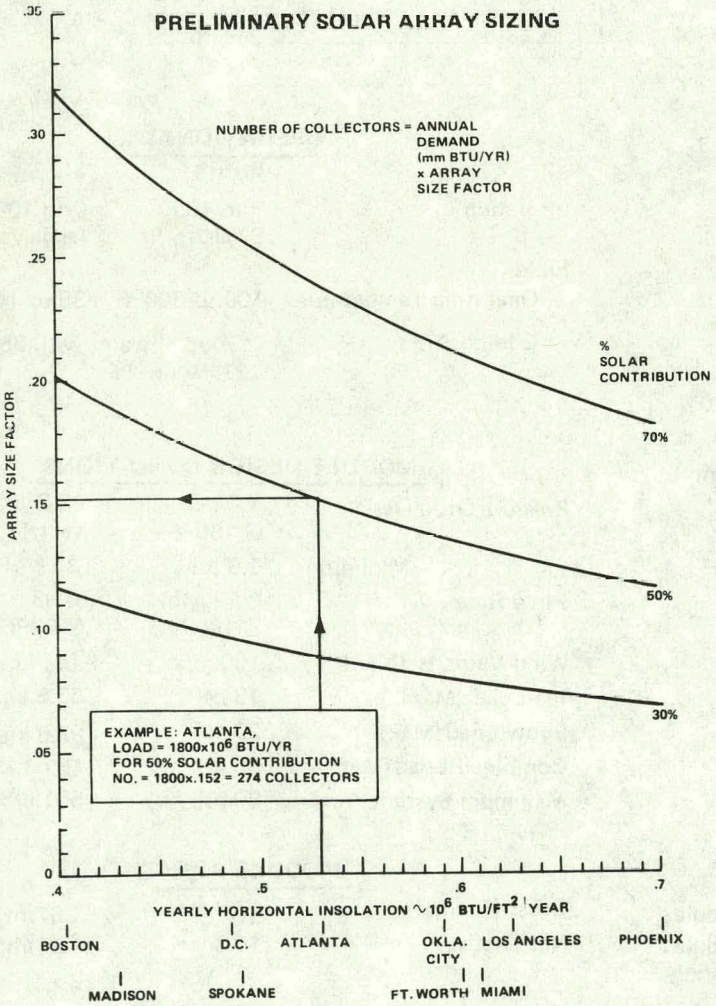

MODULE PRESSURE DROP (@ 180°F)

FLUID	Δ P (PSI)
100% water	6.0
35% glycol/water	7.0
50% glycol/water	8.0

HEADER

TUBE SIZE	TYPE COPPER	MAXIMUM NUMBER OF PANELS/ROW
3/4"	L	18
1"	L	36

OPTIONAL ACCESSORY HARDWARE

HEADER KIT
MOUNTING KIT
SOLAR CONTROLLER
LEXAN OR ACRYLIC WINDOW

For Further Information Contact:
Manager, Solar Heating and Cooling Marketing
General Electric Company,
P.O. Box 13601.
Philadelphia, PA. 19101
Phone – (215) 962-2112/2113

GENERAL ELECTRIC

SPECIFICATION

EVACUATED TUBE HYDRONIC SOLAR COLLECTOR

GENERAL

The solar collector shall be an evacuated tube liquid type designed for efficient operation at fluid temperatures ranging from 100 to 300° Farenheit (66 to 149° Celsius). The collector module shall be furnished with all the necessary components, excluding support attachments, ready for field attachment to support and piping systems. Specifications and requirements stated herein shall not supersede applicable Federal, State, or Local Codes and Regulations.

SOLAR COLLECTOR MODULE

General Construction

The solar collector shall be composed of standard manufactured modules which are designed for simple attachment to the support structure and piping system. The modular unit shall have a gross dimensions of approximately 4 feet by 4 feet (1.2 by 1.2 meters) with an active-to-gross area ratio greater than 0.85. The active (effective) area, as defined by the manufacturer, is the planar area onto which incident energy is directed to the absorber surface (s). The gross operating weight of the solar collector shall not exceed 4.0 pounds per square foot (19.5 kg/m^2) of gross area. The collector assembly shall be capable of withstanding wind velocities of up to 100 mph (161 km/hr) with an ice and snow load of 20 lb/ft^2 (97 kg/m^2) without structural damage.

Glass Tubes

The module shall consist of evacuated glass tubes which are composed of two concentric glass tubes separated by a vacuum of less than 10^{-4} Torr. The glass construction shall contain the vacuum without the usage of mechanical seals. The vacuum shall be maintained for the life of the tube at temperatures up to 650°F (343°C) with an active getter.

The outer radial surface of the inner glass tube shall have a coating with an average hemispherical emittance less than 0.05 at 212°F (100°C) and an absorptivity greater than 0.85. The solar absorptance of the glass shall be greater than 87 percent of the visible light spectrum.

Long-term degradation of coating and glass properties shall have a combined effect of less than 10 percent of the total absorbed energy.

Fluid Passages

The collector unit shall be suitable for use with water or a mixture of water and anti-freeze solution (up to 50 percent by volume) as the heat transfer fluid.

Fluid passages shall not be restricted, when the specified fluid quality is maintained, to the point that collection efficiency (as a function of fluid flow) is decreased by more than 5 percent over the design life of the collector.

Fluid passages shall be designed to withstand, without degradation, the effects of no fluid flow and high insolation condition. Fluid passages shall be designed for operational pressures up to 80 psi (551 kPa) and fluid temperatures up to 300°F (149°C).

Insulation

There shall be at least 1.5 inches (3.80 cm) of 3 lb/ft^3 fiberglass (48 kg/m^3) or equivalent insulation surrounding all fluid-carrying components which are not thermally protected by the vacuum from the ambient environment. The insulation will be properly protected from the ambient environment to preclude significant insulation performance degradation resulting from ambient conditions. Fluid temperatures up to 650°F (343°C) shall not affect the performance or integrity of the insulation.

PERFORMANCE

Collector performance shall be defined by its instantaneous efficiency based on active collector area in graphical (Figure 1) and equation form as

$$\eta = A - B\psi$$

where

η = instantaneous collection efficiency (active area)

ψ = $(T_{col} - T_{amb}) / Q_i$ °F-hr-ft^2/BTU

T_{col} = average collector temperature, °F

T_{amb} = ambient temperature, °F

Q_i = insolation on the plane of the collector BTU/hr-ft^2)

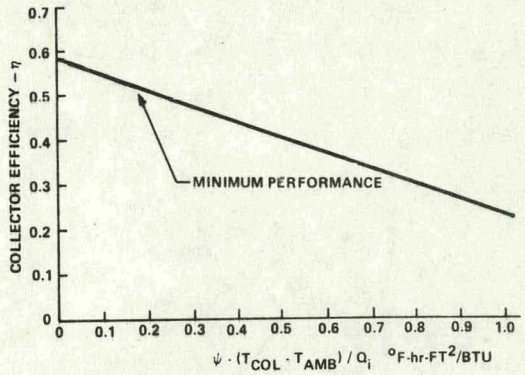

Figure 1. Instantaneous Collector Efficiency

The constants A and B are obtained by placing a least squared straight line through the data points located between $\psi = 0.0$ and $\psi = 1.0$. Certified test data from a recognized independent testing agency, along with manufacturer's test data, shall be identified on Figure 1 and utilized to define the constants A and B. Collector efficiency shall be determined in accordance with ASHRAE 93-77 test procedures.

The solar collector shall have an efficiency plot which is greater than the minimum performance line of Figure 1. The constant A shall be greater than 0.58 and B shall be less than 0.37 BTU/hr-ft^2-^{o}F.

QUALITY ASSURANCE

Manufacturer

The manufacturer of the solar energy collector shall be a recognized producer of said equipment and shall submit documentation demonstrating a high capability in design engineering, testing, fabrication, installation and maintenance of equipment the same as or similar to that called for on the drawings and in the specification(s).

All Other

All materials, assemblies, coatings, thermal bond connection, fluid connections, vacuum seals, structural members and housing configurations shall be of the highest quality and shall fully meet those standards called for and required in the "Interim Performance Criteria for Solar Heating and Cooling Systems in Commercial Buildings" (NBSIR 76-1187-1976). Any change and/or deviation from these criteria must be fully clarified. Standards and work of a higher quality than in the above cited, called for in these specifications and/or on the drawings, shall be met by the manufacturer.

OPERATIONAL DOCUMENTS

The manufacturer shall provide, within one (1) week of collector delivery, installation documentation for the collector. These manuals shall describe preventive maintenance, general maintenance, fluid quality control and replacement requirements and material replacement and control instructions.

WARRANTY

The manufacturer shall warrant that at time of delivery, the solar collector will be free from defects in material and manufacture and will be of good quality and workmanship. This warranty shall provide for the replacement or repair, at the manufacturer's election, of the collector or parts thereof, provided that written notice of the defect shall be given to the manufacturer within one (1) year after collector delivery.

$1.25

DOCUMENT NO. 78SDS4214A
NOVEMBER 1978

SOLARTRON™ TC-100
VACUUM TUBE SOLAR COLLECTOR

COMMERCIAL AND INDUSTRIAL INSTALLATION MANUAL

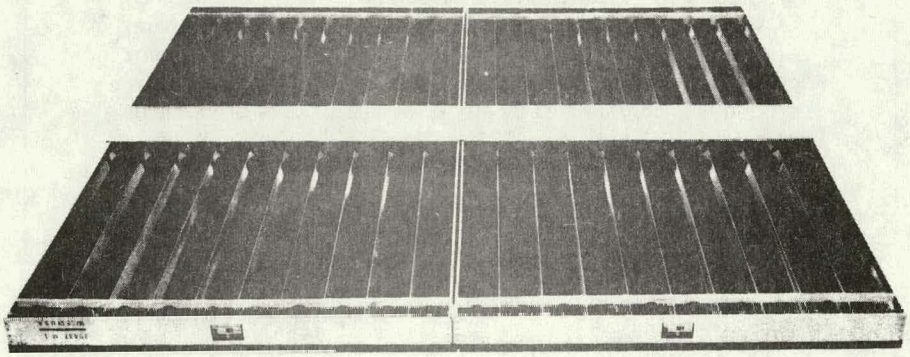

GENERAL ELECTRIC

ADVANCED ENERGY PROGRAMS
P.O. BOX 13601
PHILADELPHIA, PA 19101

The various configurations included in this brochure are included for illustration of several typical solar collector system applications and are not intended as constructional information. Although reasonable care has been taken in their preparation to insure their technical correctness, no responsibility is assumed by the General Electric Company for any consequences of their use.

The solar products and arrangements disclosed herein may be covered by patents of General Electric Company or others. Neither the disclosure of any information herein nor the sale of solar products by General Electric Company conveys any license under patent claims covering combinations of solar products with other products or components. In the absence of an express written agreement to the contrary General Electric Company assumes no liability for patent infringement arising out of any use of the solar products with other products or components by any purchaser of solar products or others.

TABLE OF CONTENTS

Section		Page
1	INTRODUCTION	102
2	GENERAL DESCRIPTION	102
	2.1 Physical Characteristics	102
	2.2 Collector Components	102
	2.3 Collector Fluid	102
	2.4 Optional Collector Accessories	102
3	COLLECTOR INSTALLATION	103
	3.1 Installation Summary	103
	3.2 Mounting Techniques	104
	3.3 Layout and Spacing	106
	3.4 Installation Procedures	106
4	COLLECTOR PLUMBING AND CHECKOUT	111
	4.1 Header Description/Plumbing	111
	4.2 Header Installation Procedures	111
	4.3 Leak Test Procedures	112
5	FINAL ASSEMBLY AND CHECKOUT	113
	5.1 Vacuum Tube Installation	113
	5.2 Operational Checkout	114
	5.3 Insulation and Cover Installation	114
6	COLLECTOR LOOP OPERATION AND MAINTENANCE	117
	6.1 Collector Loop Operation	117
	6.2 Periodic Maintenance	117
	6.3 Periodic Inspection	118
	6.4 Glass Tube Replacement	118
	6.5 Safety Considerations	118
7	SPECIFICATION DATA SHEET	119

1. INTRODUCTION

This document has been prepared to provide ARCHITECTS, CONSULTANTS, INSTALLING CONTRACTORS and ENGINEERS the basic data required to integrate a TC-100 vacuum tube solar array into a building design and to provide the mechanical contractor with the detail to install and check out the subsystem. Instructions for approximate sizing of a TC-100 array, component sizing and estimating system performance have been described in General Electric Document No. 78SDS4215A – Solartron(TM), Vacuum Tube Solar Collector "Commercial and Industrial Application Guide."

Should you have questions regarding this material, or should you require additional information, contact:

Manager, Solar Heating and Cooling Marketing
General Electric Company
P.O. Box 13601
Philadelphia, PA 19101

Phone: (215) 962-2112/3

2. GENERAL DESCRIPTION

2.1 PHYSICAL CHARACTERISTICS

The General Electric Solartron TC-100 solar collector module (Figure 2-1 consists of eight glass vacuum tubes nested in a cusp-like reflector. The collector is designed to be mounted with the vacuum tube axis oriented up and down, with provisions for simple four-corner mounting. Two flare fittings connect each collector to the supply and return headers.

A collector module has an installed weight of approximately 57 pounds, or about 3.3 pounds per square foot. The collectors are installed without the glass vacuum tubes, and each module without the tubes weighs about 35 pounds, providing ease in handling. The TC-100 module collector is designed for an environmental loading (combined wind, ice, and snow) of 33 pounds per square foot when installed.

2.2 COLLECTOR COMPONENTS

The collector module consists of:

1. An aluminized steel frame
2. An anodized, polished aluminum cusp-like reflector
3. Copper finned-tube loops to transport the working fluid
4. Glass vacuum tubes with rubber grommets and spring clips.

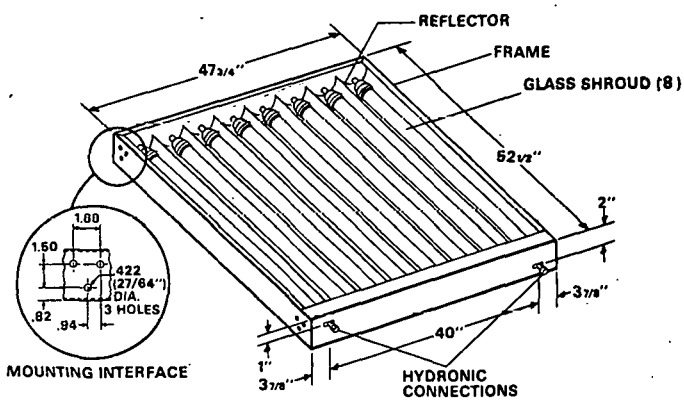

Figure 2-1. GE TC-100 Collector Module

The copper tubing between vacuum tubes is pre-insulated. The collector modules are completely assembled except for the glass vacuum tubes which are shipped separately. The modules are shipped with protective plastic covers over the copper finned-tubes. These plastic covers remain in place until the system is checked out at which time, the plastic covers are replaced with the glass vacuum tubes.

The glass vacuum tube and the finned-tube are shown in cross section in Figure 2-2. The glass vacuum tube consists of two glass cylinders joined to form a large "Thermos (TM) bottle". The outer cylinder serves as the window, and the inner cylinder, which is selectively coated on the outer surface, acts as the absorber. The space between the two glass cylinders is evacuated. The energy absorbed is transferred through the inner glass tube and into a conforming cylindrical copper fin. The thermal energy is then conducted along the fin and into the fluid passing through the U-tube. This design eliminates glass-to-metal seals, eliminates impact of potential glass breakage on operational continuity, reduces thermal inertia, and eliminates thermal expansion differentials between metal and glass components. The 1/4 inch copper tubing which contains the working fluid terminates with 45-degree flare nuts for mechanical attachment to headers.

2.3 COLLECTOR FLUID

The recommended non-freezing working fluid is a mixture of 35 to 50 percent (by volume) Prestone II (TM) ethylene glycol.

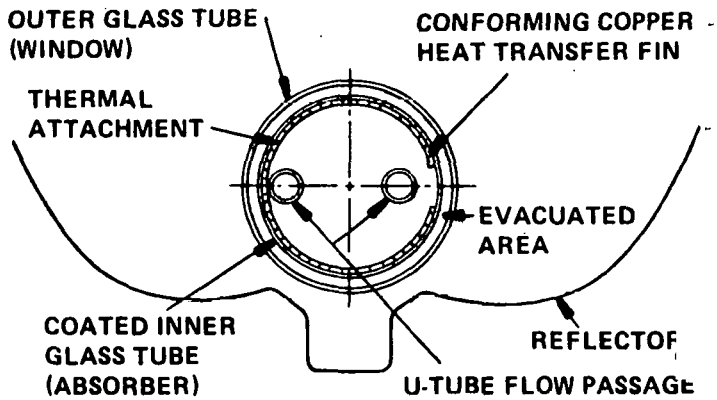

Figure 2-2. Cross-Section of Active Collector Elements

with distilled, deionized, or demineralized water,[1] which offers freeze protection to -4°F and -34°F, respectively. Operating temperatures should be limited to 300°F in order to prevent decomposition of the ethylene glycol.

[1] Note: Water containing no more than the following is satisfactory:

chlorides	100 ppm
sulfates	100 ppm
bi-carbonates	100 ppm
total hardness	250 ppm

2.4 OPTIONAL COLLECTOR ACCESSORIES

In addition to TC-100 vacuum tube solar collectors, General Electric offers several optional solar system accessory kits that have been engineered to facilitate collector installation and to contribute to the operational efficiency and reliability of the system.

Mounting Bracket Kits (Figures 3-3, 3-4 and 3-5) for either sloping surface, flat-roof or space frame applications are available. Direct mounting bracket kits (Figure 3-3) include T-brackets which lock the collector to commercially-available UNISTRUT® channels which are attached to the roof or other substructure. "Internal" brackets utilize pins while "external" brackets are bolted. The strut mounting option (Figure 3-4) offers a standard top and bottom bracket design for use with contractor-supplied transition struts. Space frame bracket kits (Figure 3-5) provide a standard L-bracket with a 3/8-inch threaded U-clamp for 3" diameter tubes. All three kit options include the required nuts, bolts and washers.

Header Kits (Figures 5-4 and 5-9) are available for both single and dual collector configurations. Header kits include prefabricated header pipes with the appropriate hydraulic fittings, alignment/anchor brackets and clamps, fiberglass insulation, aluminized steel covers, joint and fastening hardware.

Collector Window Kits (Figure 2-3) are recommended ONLY for areas of extreme vandalism or for regions having incidences of large hail. The simply-mounted collector window kit is offered either in UV-stabilized Lexan® or acrylic. Appropriate attachment hardware is included.

Solar Controller Kits (Figure 2-4) are modular units containing electronic logic and a silicon photosensor that digitally integrates solar energy levels for system control. The controller operates from a 24 VAC, 60 Hz source and outputs two 24-VAC signals. These functions control collector and storage loop pumps and valves. The controller also provides a "lockout" function following power loss. The controller kit includes all mounting hardware.

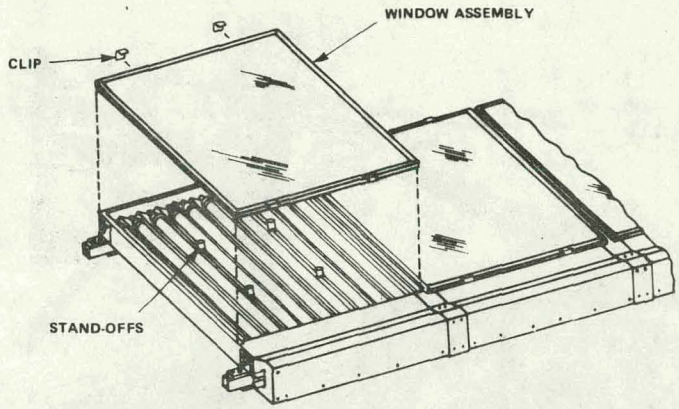

Figure 2-3. Collector Window Kit

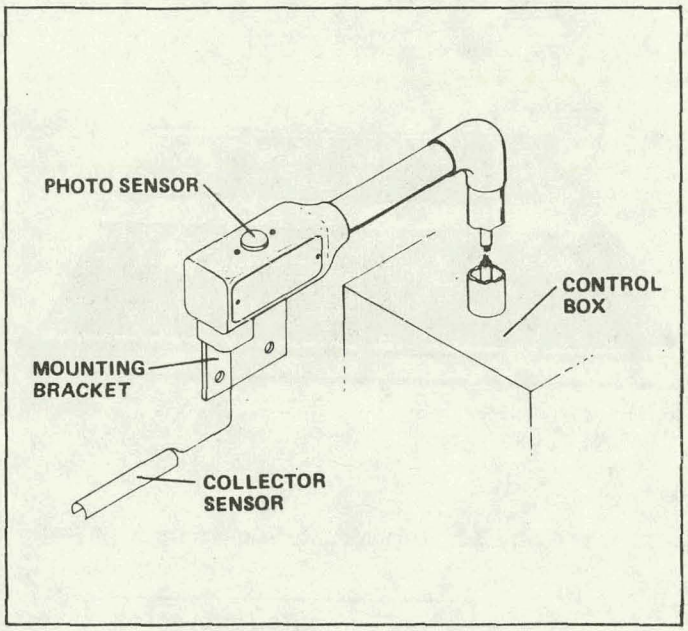

Figure 2-4. Solar Controller Kit

3. COLLECTOR INSTALLATION

3.1 INSTALLATION SUMMARY

A summary of the installation procedure follows. The discussion herein includes GE optional accessories, but similar steps are recommended for field-procured accessories. Roof, ground, or space-frame mounting are all potential methods of installation, depending upon structural considerations, aesthetics and cost. The collectors may be arranged in individual rows (Figure 3-1) or in a dual row (Figure 3-2) utilizing common headers.

Upon completion of the collector supporting structure, the collectors are mounted without the vacuum tubes (Section 3.4). The header tubes are then attached to the collectors and brazed together (Section 4.2). A leak check follows (Section 4.3). Operation of the balance of the solar system, including the controls is verified. The vacuum tubes are then installed (Section 5.1), followed by high-temperature cycling and checkout (Section 5.2). The piping is insulated and covered (Section 5.3), and the system is operational.

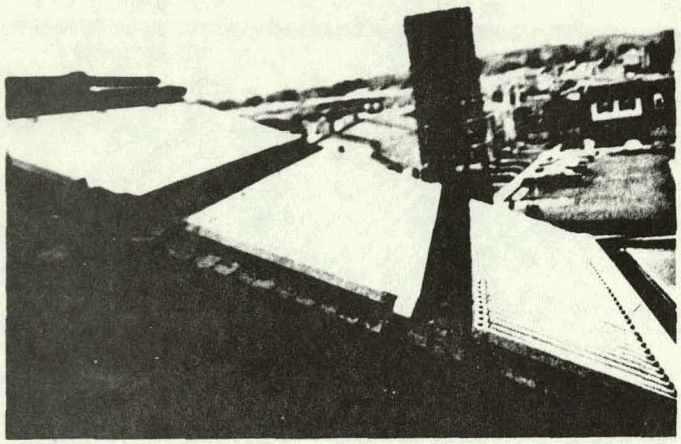

Figure 3-1. Single-Mounted Collector

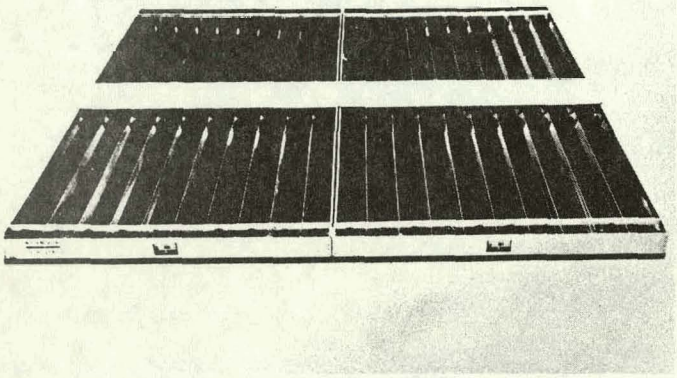

Figure 3-2. Dual-Mounted Collectors

3.2 MOUNTING TECHNIQUES

There are many acceptable techniques for mounting solar collectors. The method selected must consider structural, architectural, cost and schedule constraints. As a guide for collector mountings, three general techniques suitable for simple four-corner mounting are presented:

1. Direct mounting (Figure 3-3).
2. Strut mounting (Figure 3-4).
3. Space Frame mounting (Figure 3-5).

Specific requirements may warrant variations or a combination of the three.

A collector mounting technique that utilizes a UNISTRUT channel attachment (Figure 3-3) provides a simple, quick installation and will also allow flexibility in the lateral positioning of the mounting brackets. By avoiding hard-mounting of individual collector support brackets, installation time can be reduced significantly in the alignment and attachment of brackets and collectors. Installation time can be further reduced by using the internal mounting brackets offered in the General Electric mounting kits which use pins rather than nuts and bolts for slide-on interconnection of adjacent collector panels.

In a strut-mounted installation (Figure 3-4), hard mounting of individual collector support brackets is required to provide rigid support. Strut mounting will be somewhat more time consuming than a direct mounting in terms of both alignment and attachment. Cross-bracing may be required for lateral support.

A "U-clamp" attachment, (Figure 3-5), can effectively be used for most space-frame applications. Like the "T-bracket" design used with a UNISTRUT channel, "U-clamp" brackets use both pins and bolts for ease of installation.

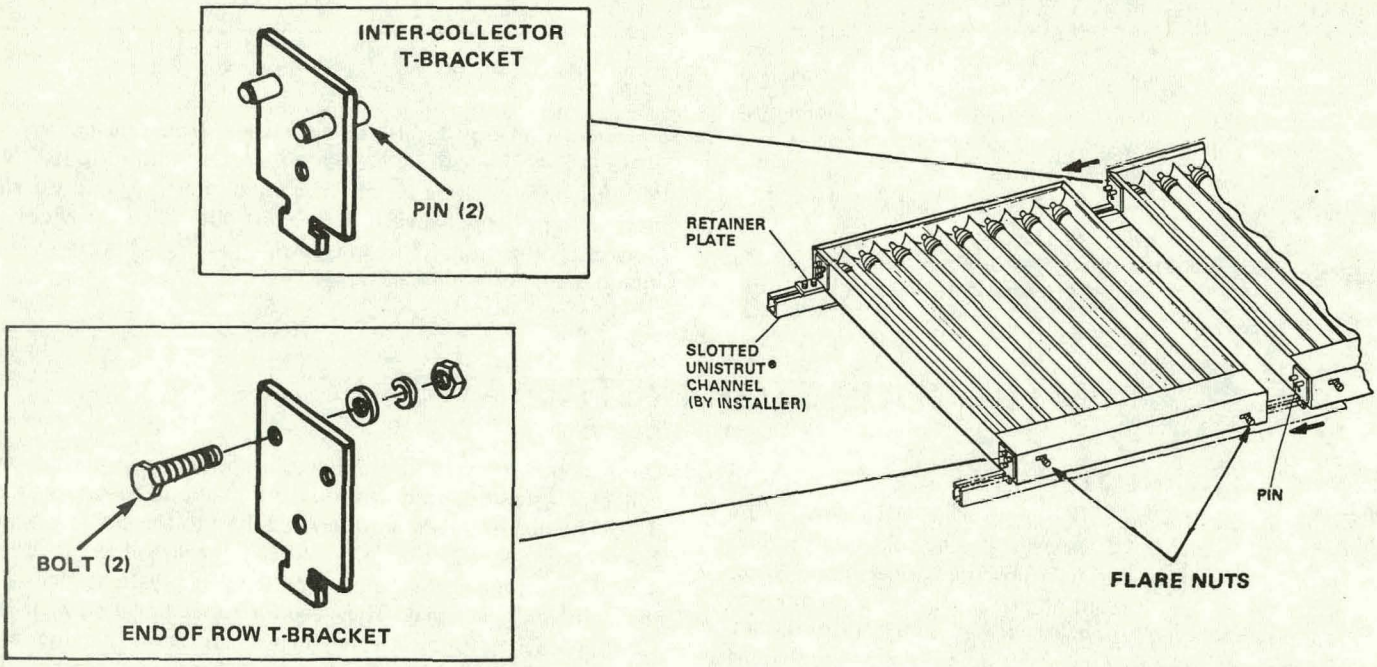

Figure 3-3. Direct Mounting Kits

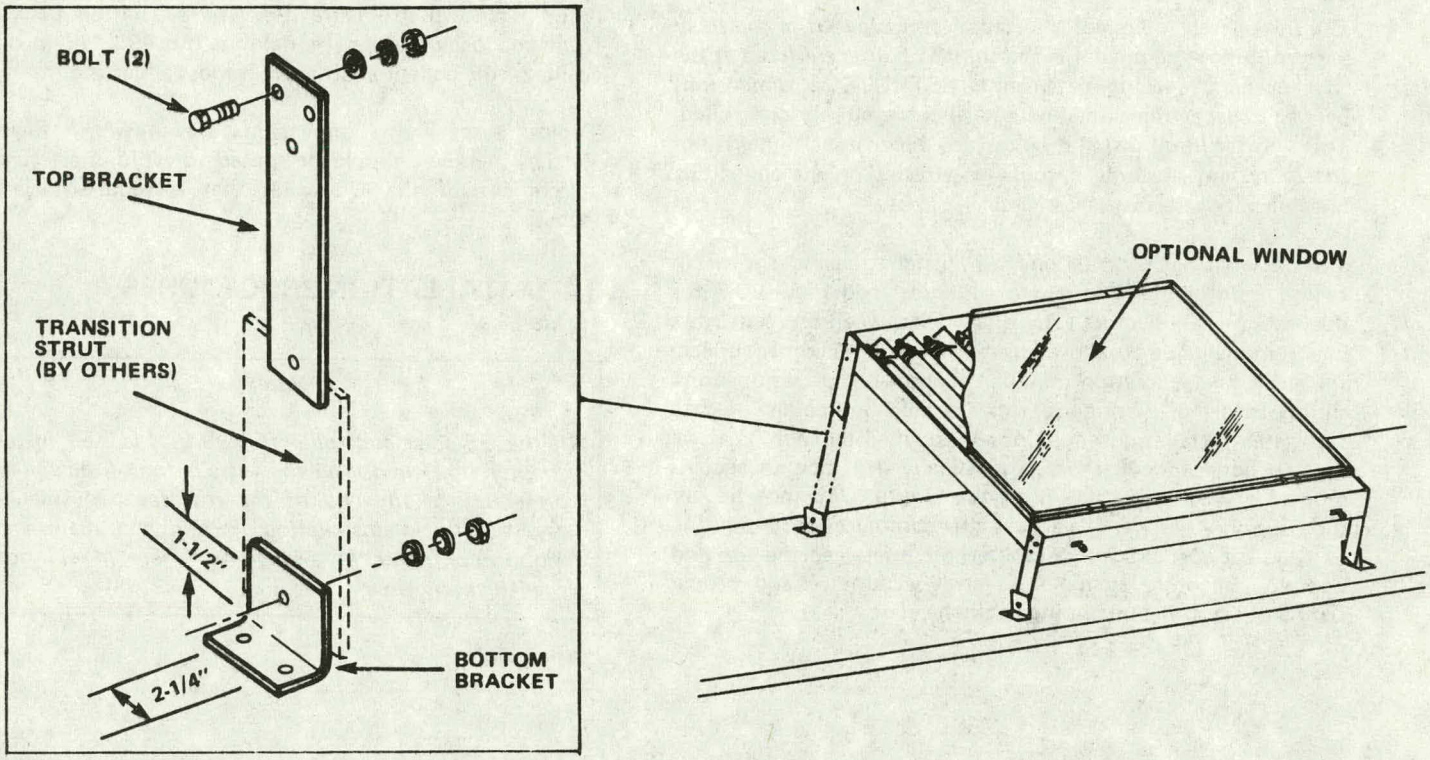

Figure 3-4. Strut Mounting Kit

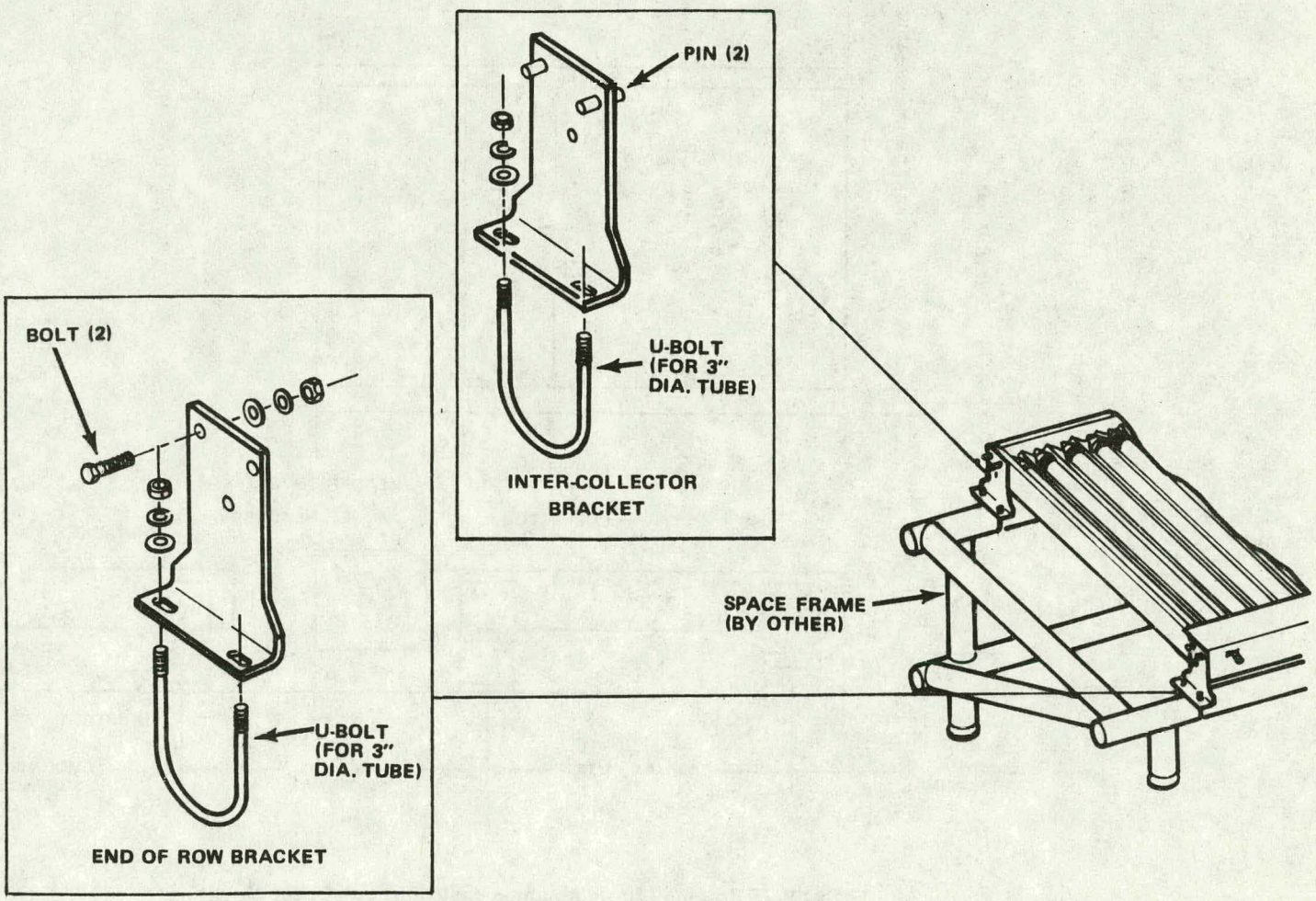

Figure 3-5. Space Frame Mounting Kit

3.3 LAYOUT AND SPACING

The initial step in collector installation is a layout of the array pattern. Since the collector attachment points are fixed at the four corners, spacing between UNISTRUTS or dimensions between space frame members need to be closely controlled. This will facilitate installation, assure dimensional integrity of the array and preclude extraneous stresses on the collectors. Spacing between rows is less critical.

Typical spacing for UNISTRUT installations is shown in Figure 3-6 for single-mounted collectors and Figure 3-7 for dual-mounted collectors. The distance between adjacent rows is a nominal value to allow access. For a more compact collector array, the separation may be reduced, but provisions for a sliding ladder or working platform should be implemented to facilitate installation and potential maintenance. Lateral spacing between collectors is nominally 1/4 inch to accommodate a 3/16-inch thick T-bracket and a 1/16 inch header tube support bracket. In a dual row configuration, mounting of tube support brackets are alternated between the top and bottom collectors to maintain array symmetry and proper fitting of the collector tubing to the headers.

Typical spacing of bottom brackets for a strut-mounted installation is shown in Figure 3-8. The separation between the front and back brackets is flexible, but 49¼" divided by the cosine of the collector tilt angle is most appealing.

Typical space frame dimensions are shown in Figure 3-9. Vertical members should be spaced to avoid interference with attachment of the U-bracket that is required every 48.0 inches.

3.4 INSTALLATION PROCEDURES

> *Note:*
>
> *If the GE solar controller (Figure 2-4) is used, install an adapter bracket during the installation of the collectors preferably at the end of the row for convenience of accessibility in installation, wiring and maintenance. Mount controller in a position where it will not be shaded at any time.*

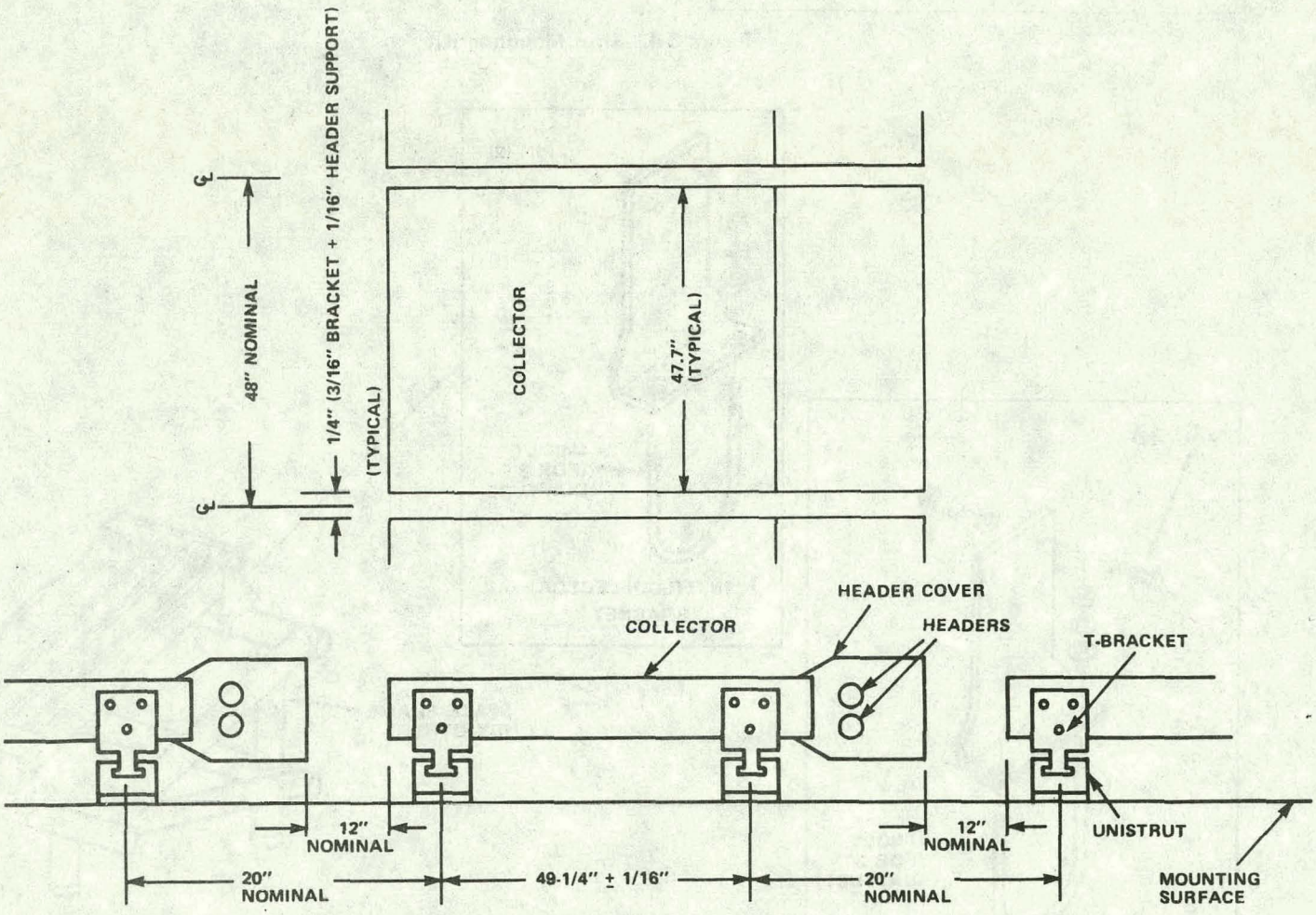

Figure 3-6. UNISTRUT Spacing (Single Mounted Collector) For Direct Mounting

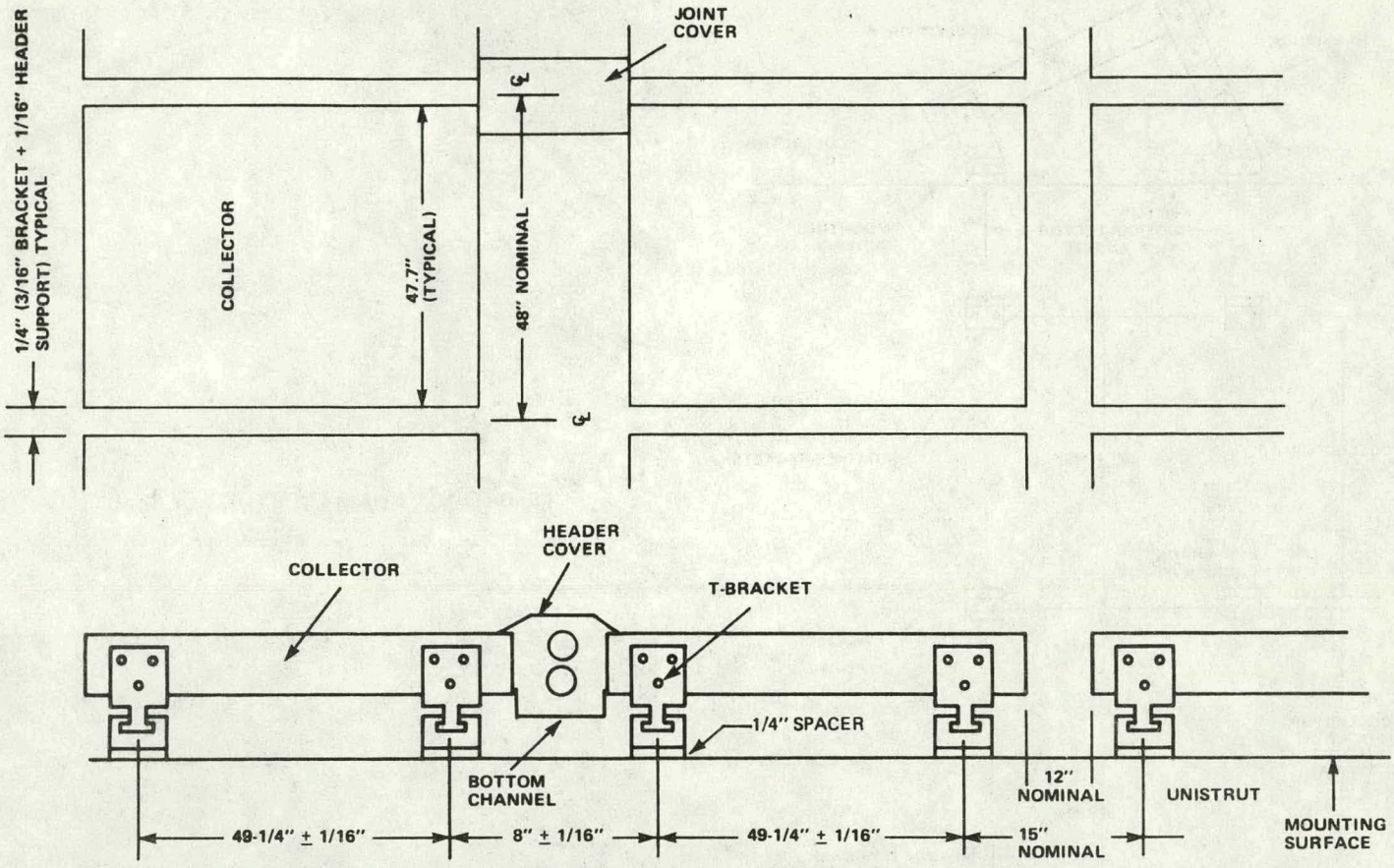

Figure 3-7. UNISTRUT Spacing (Dual-Mounted Collector) For Direct Mounting

Direct Mounting Collectors

Install UNISTRUTS with spacing shown in Figure 3-6 or 3-7 and attach to the roof, (Figure 3-10), or substructure. For roof mounting, include 1/4" neoprene-type spacer under the UNISTRUT at each attachment point. For dual mounted collectors, use P5500 series UNISTRUT or P1000 series with 1/4" spacers at the attachment points. Single- and dual-mounted collector installation instructions are described in the following sections. Use the instructions that apply to your configuration.

> *Note:*
>
> *Retainer plate assemblies (plates, bolts, washers and spring-type nuts), (Figure 3-12), used at the ends of each row should be obtained from the mounting structure manufacturer, or obtained locally by the installing contractor.*

Direct, Single-mounted Collectors:

1. Before positioning the first collector on the UNISTRUT, remove the six sheet metal screws holding the transition cover at the base of the collector. Remove the transition cover and attach an end-of-row T-bracket (without pins) to the side of the collector that will face out, (Figure 3-11), using two bolts for each bracket. Removal of the transition cover is only required for end-of-row collectors.
2. Re-attach the transition cover with the six screws. Use two bolts to attach the other end-of-row T-bracket to the same side of the collector.
3. Slide the collector into place so that the T-brackets grip the UNISTRUTS. Finger tighten the retainer plates to the UNISTRUTS. (Figure 3-12).
4. Place one internal T-bracket (pinned) into each UNISTRUT and a pipe support bracket at the header end and continue installing internal collectors.
5. Verify the correct location and squareness of the first collector and secure the two retainer plates to the Unistruts.
6. To mount the adjacent collector, place tube support brackets over the pins of the T-brackets, (Figure 3-13), at the header end of the collector and slide the next collector laterally until the pins are fully inserted and the collectors are snug one to the other.
7. For subsequent collectors, insert a pinned T-bracket into each UNISTRUT and a pipe support bracket at the header end and continue installing internal collectors.
8. At the end of each row, install the last collector as described in Steps 1-3. Insure that each collector is snug against the next and then secure the two retainer plates. The next step is installation of headers (Section 4).

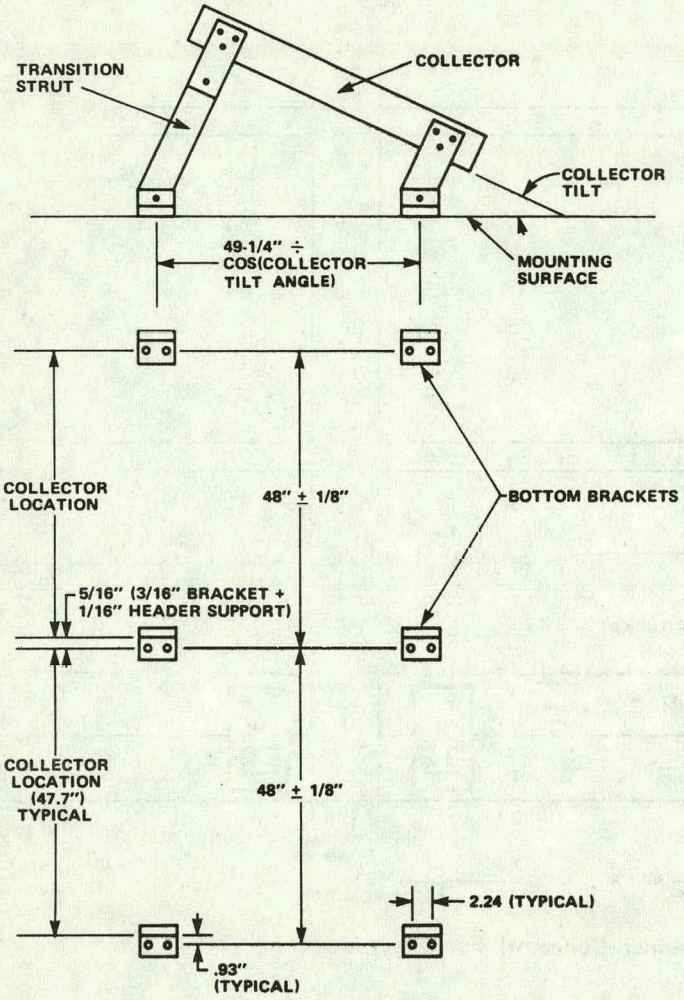

Figure 3-8. Bottom Bracket Spacing for Strut Mounting

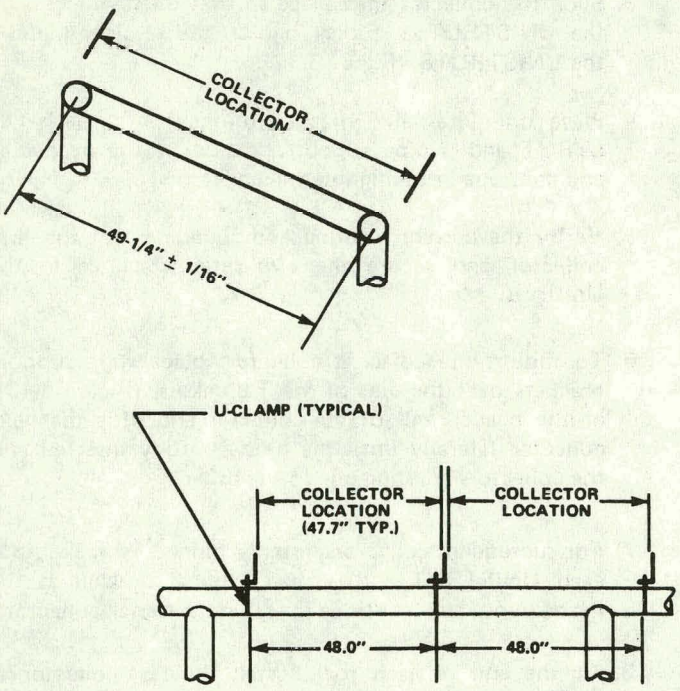

Figure 3-9. Space Frame Bracket Spacing

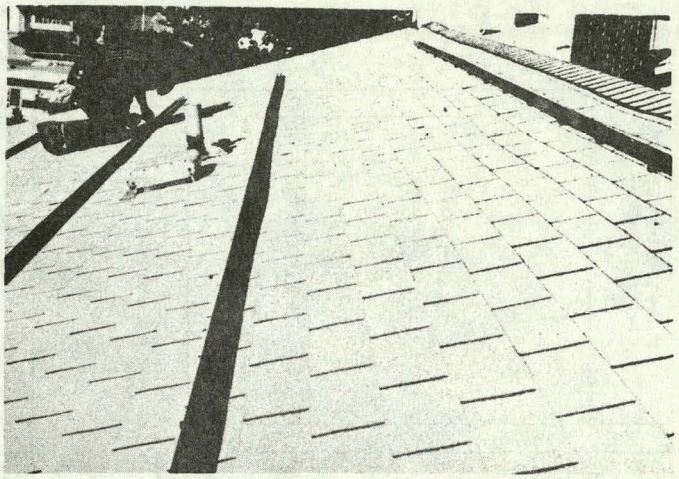

Figure 3-10. Attach UNISTRUT to Roof

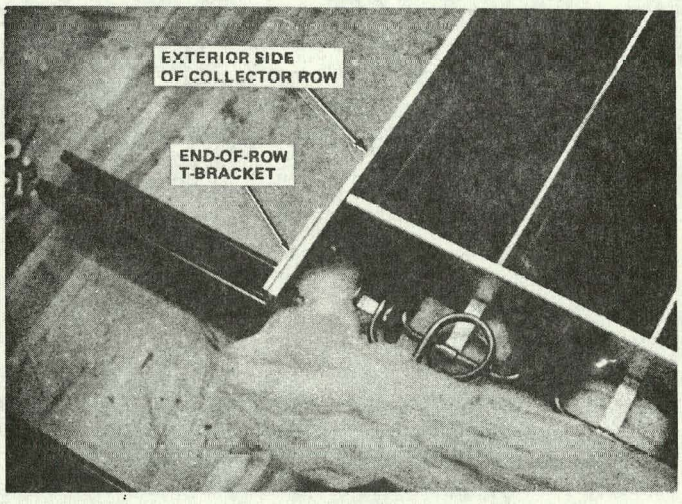

Figure 3-11. Bolted Lower T-Bracket

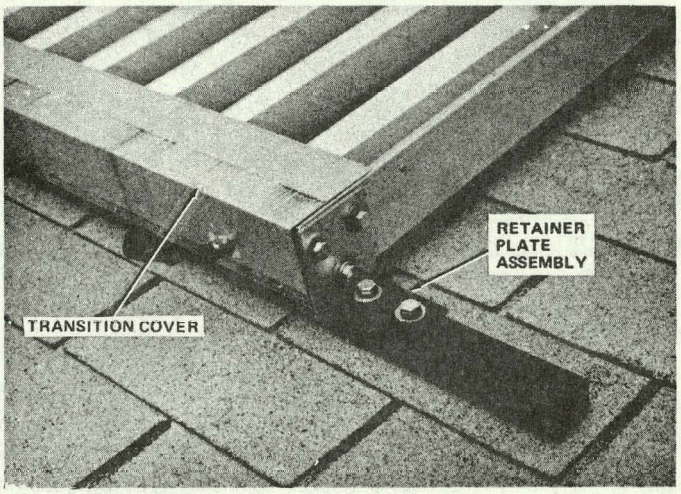

Figure 3-12. Place Collector on UNISTRUT

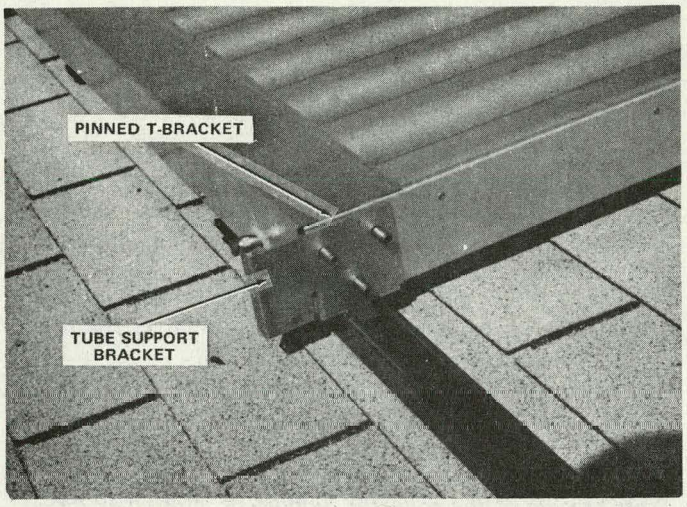

Figure 3-13. Internal Collectors are Fastened by Pinned T-Brackets

Direct, Dual-mounted Collectors:

1. Before positioning the first collector on the UNISTRUTS, remove the six sheet metal screws holding the transition cover at the base of the collector. Remove the transition cover and attach the two end-of-row T-brackets (without pins) to the side of the collector that will face out, (Figure 3-11), using two bolts for each bracket. Removal of the transition cover is only required for end-of-row collectors.

2. Temporarily re-install the transition cover with one screw.

3. Slide the collector into place so that the T-brackets grip the UNISTRUT. Place one internal T-bracket (pinned), (Figure 3-10), into each UNISTRUT and insert into the corresponding holes in the collector frame. Assure the position and squareness of the collector and tighten the retainer plates (Figure 3-12) to the UNISTRUT.

4. To install subsequent internal collectors in the first row of the dual configuration, place one internal T-bracket (pinned), (Figure 3-13), into each UNISTRUT and insert into the corresponding holes in the collector frame. At the collector header end, a tube support bracket, (Figure 3-13), is inserted over the pins of the T-bracket at every other collector. Remove five of the six transition cover screws at the base of the collector and place the collectors on the UNISTRUT. With the brackets in place, slide the collector laterally until the pins are fully inserted and the collectors are snug one to the other.

5. At the completion of the row, the last collector is installed as indicated in Steps 1 and 2. Be sure all collectors in the row are snug one against the other before tightening down the two retainer plates.

6. The second row of the dual configuration is now mounted. Repeat Step No. 1.

7. Attach the end closure and cover to the header channel, (Figure 3-14). Re-install the collector transition cover and attach the bottom header channel to the collector (Figure 3-15) using the six screws previously removed. The outside edge of the channel should be 1/8" beyond the end of the collector to prevent overrun of the channel assemblies.

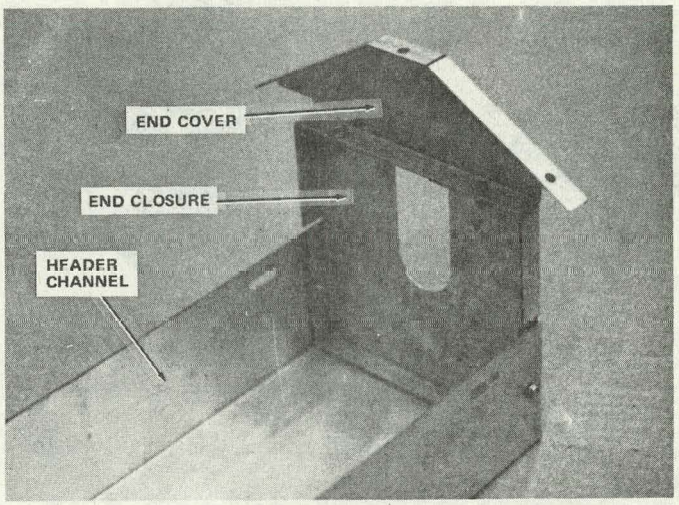

Figure 3-14. Attach End Closure and Cover for End-of-Row Collectors

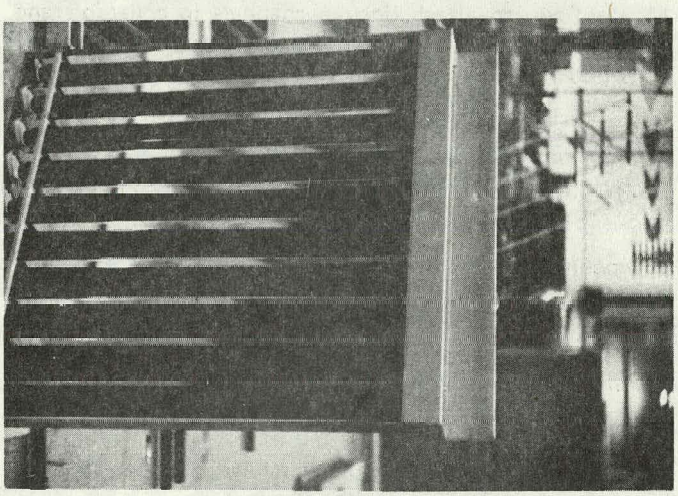

Figure 3-15. Attach Bottom Channel to the Collector

8. Remove the remaining transition cover screw from each collector on the bottom of the first row.

9. Place the collector and channel assembly on the UNISTRUT below the first collector row installed (Figure 3-16) with the T-brackets in position. Attach the header channel to the top collector using two of the screws removed in Step 1.

10. Place an internal T-bracket (pinned) into each UNISTRUT and insert into the corresponding holes in the collector. Verify the correct location and squareness of the first collector, and secure the retainer plates, (Figure 3-16), to the UNISTRUT.

    At the collector header end, a tube support bracket will be inserted over the pins of the T-bracket every other collector, alternately to those placed on the opposing row.

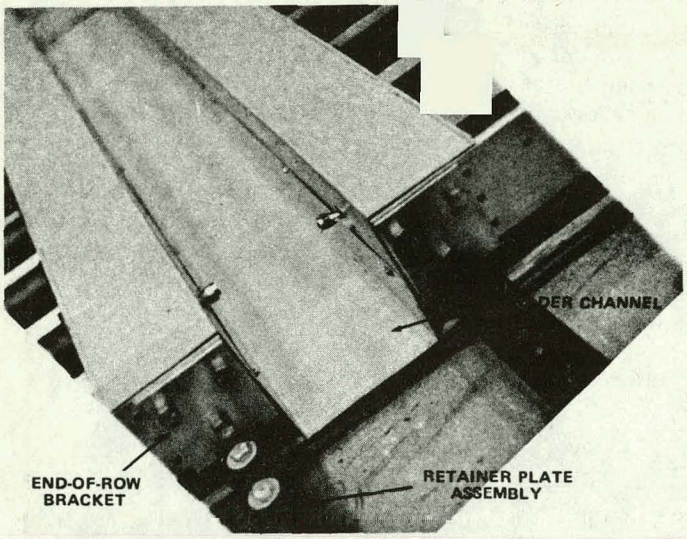

Figure 3-16. In Dual Arrangement, Place the Next Collector Below the First

11. Continue to attach bottom channels to collectors and complete installation of internal collectors. At the end of the row, the last collector is installed as indicated in Steps 1, 7 and 9. Be sure all collectors in the row are snug one against the other before tightening down the two retainer plates. The next step is installation of headers (Section 4).

Strut-mounted Collectors

With bottom brackets completely installed and spacing verified, (Figure 3-8), the collectors are mounted as follows:

1. Install all transition struts (Figure 3-4) and top brackets to the bottom brackets.

2. Remove the six sheet metal screws and the transition cover at the bottom of the collectors.

3. Beginning at the end of a row, place collectors of the row between the bracket assemblies on the mounting surface with the flare nuts on the lower edge.

4. Lift the header end of the first collector and align the outside mounting bracket hole with a hole in the collector. Temporarily insert one bolt (finger tight) through the assembly. Before inserting a bolt in the mounting bracket on the opposite side of the collector, align the adjacent collector, position a tube support bracket (similar to Figure 3-13) between the two collectors, and temporarily insert a bolt. This procedure is repeated in sequence until the header end of all the collectors in the row is attached.

5. Lift the other end of each collector and attach to the transition strut/bracket in a similar manner to step 4. Use two bolts for each attachment bracket until the row is complete. Tube support brackets are not required at row ends.

6. Complete the assembly at the header end of each collector by adding one more bolt for each bracket attachment. Before completing attachment, check collector alignment.

7. Re-install the collector transition section covers using the six sheet metal screws removed in Step 2. The next step is installation of headers (Section 4).

> *Note:*
>
> *Cross bracing of the collector support structure may be required*

Space Frame Mounted Collectors:

After the space frame has been dimensionally verified, (Figure 3-9), using "U-clamp" brackets, the collectors are installed as follows:

1. Install (finger-tight) intercollector U-clamps (pinned) at approximate locations along the top and bottom space frame members. The U-clamp flange should face away from the first collector to be installed to allow access.

2. Remove the six sheet metal screws and the transition section cover. Attach an end-of-row bracket (without pins), similar to Figure 3-11, to the outer side of the collector using two bolts. Removal of the transition section cover is only required for end-of-row collectors. Re-install the transition section cover. Use two bolts to attach the other end-of-row bracket to the same side of the collectors.

3. Position the collector on the space frame (flare nuts down) at the end of the row and loosely install the U-clamps (Figure 3-5). Slide the intercollector bracket so that the pins are inserted into the collector.

4. Adjust the location and squareness of the first collector and secure each U-clamp to the space frame and the collector.

5. Mount the second and subsequent collectors using the pinned internal U-brackets, similar to that shown in Figure 3-13. At the header edge, place header support brackets over the exposed pins of the U-bracket between adjacent collectors. After positioning each collector, tighten U-bolts.

6. Install end-of-row collectors as indicated in Steps 2 through 4.

7. For dual-mounted collectors, use a procedure previously described for "direct, dual-mounted" collectors.

4. COLLECTOR PLUMBING AND CHECKOUT

4.1 HEADER DESCRIPTION/PLUMBING

The TC-100 collector utilizes two 1/4-inch, 45-degree brass flare nuts for mechanical attachment to supply and return headers. These fittings protrude from the insulated transition section of the collector as shown in Figure 2-1. The design allows lateral flexibility in these connections, primarily to accommodate up to 3/4-inch lateral thermal expansion in the headers. These nuts are nominally 40 inches apart. Pipe headers may be used to supply one collector row (Figure 4-1) or two collector rows (Figure 4-2). Alternative designs may be utilized, provided all plumbing requirements are satisfied.

TC-100 collectors are designed for parallel flow circuit hookup and for uniform flow in each collector. Optimum performance is achieved at flow rates of 0.22 gpm/collector. Uniform flow distribution throughout the array is accomplished by providing comparable pressures to each header. Good distribution through the collectors connected to each header is achieved by sizing the headers for a pressure drop equal to or less than one-tenth that of the collector. Using this criteria, header sizes of 3/4 inch and 1-inch type-L copper tubing will provide uniform flow distribution for up to 18 and 36 collectors, respectively.

Type L copper tubing and wrought copper fittings are recommended throughout the collector loop to minimize galvanic reactions and eliminate the need for dielectric fittings. All non-mechanical connections should be brazed with AWS (American Welding Society) BCu-P-5 class (15% silver bearing) brazing alloy. Headers require 1/4-inch 45-degree male fittings at specified locations to connect with the collectors. The installation of the header assembly should normally include thermal expansion devices, anchor clamps, and alignment clamps. Air removal from the collector loop is accomplished by an air separator, combined with an expansion tank. Air vents at the high points are not required.

The collector is designed with a hydraulic interface that can accommodate up to 3/4 inch of thermal expansion in the header piping. The piping design must preclude excessive loading on the collector tubing or header piping. To avoid excessive flare deformation and resultant leakage, torque fluid connections to the collector approximately 12-15 inch pounds.

Recommended manifold configurations showing optional General Electric header accessory kits are shown in Figures 5-4 and 5-9 for single and dual arrangements, respectively. The kits provide prefabricated header piping in 4- and 8-foot lengths with correctly-spaced tee fittings and male connectors, prefab insulation, covers, pipe clamps, header support brackets, and all the necessary fasteners. Dimensional specifications for 8-foot on-site assemblies are shown in Figure 4-3.

4.2 HEADER INSTALLATION PROCEDURES

It is recommended that the joining operation of lengths of headers be performed in place on the roof. In a "compact" array configuration for direct roof mounting, it is suggested

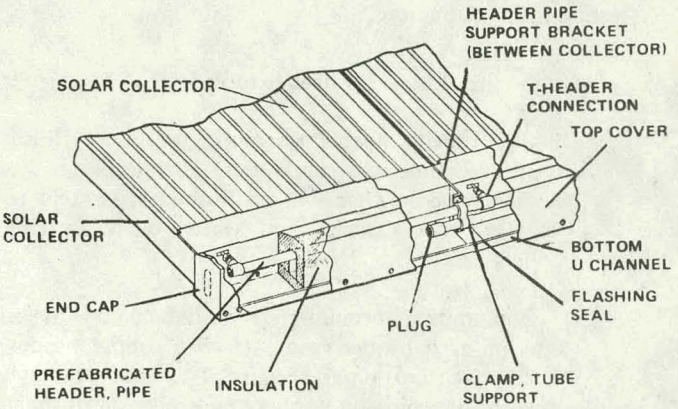

Figure 4-1. Single Collector Header Configuration

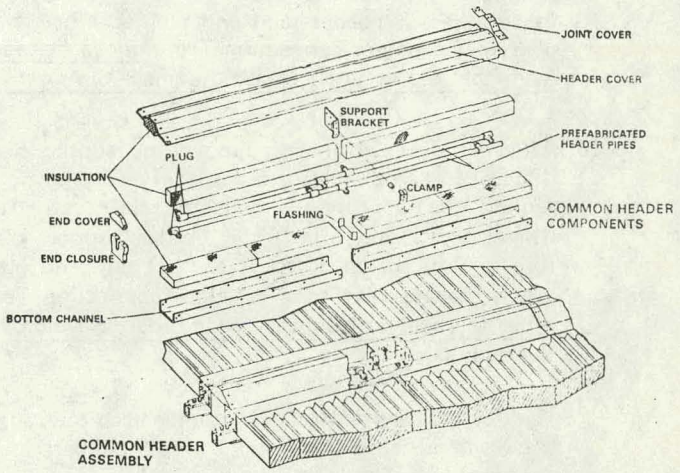

Figure 4-2. Dual Collector Header Configuration

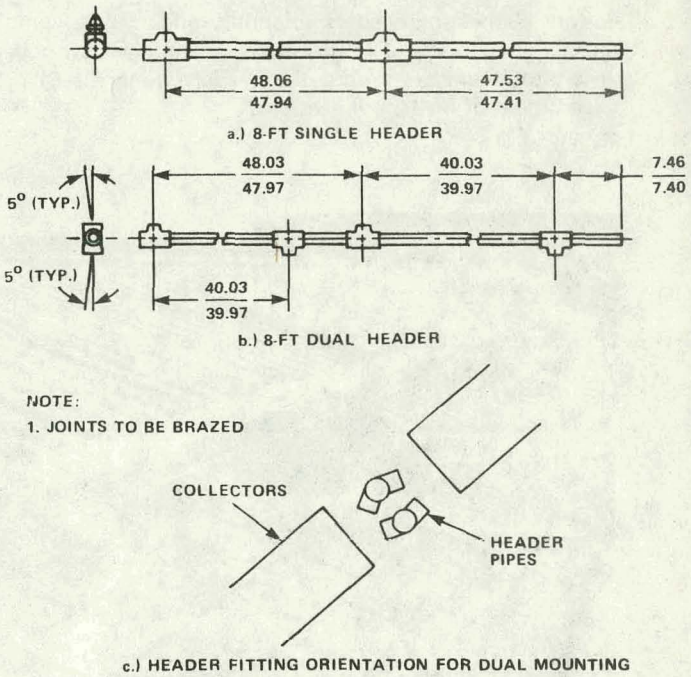

Figure 4-3. Header Dimensional and Orientation Requirements

that dual headering be employed and the plumbing installation be performed following installation of the collector frames and bottom channels. Thermal expansion compensators and clamps may be required.

Installation procedures for header tubing:

1. Before starting header assembly, thoroughly flush each header section with tap water. The supply and return lines to the headers will be flushed separately to prevent potential debris and water from entering the collectors.

2. The plumbing installation should begin at the supply end of each header row. Attach a supply header pipe as the bottom pipe, (Figure 4-4,) to the collectors. Position the pipe by connecting (finger tight) the appropriate collector fittings and be sure that the pigtails coming out of the collectors are centered in the slot. Braze adjacent headers and end plug(s). When brazing next to a collector connection Tee, remove the adapter from the Tee in order to avoid damage during brazing.

3. Attach the return header above the supply header, (Figure 4-4), just installed. Position the pipe by connecting the appropriate collector flare nut fittings (finger tight) and attach the header support clamps (Figure 4-5). Braze adjacent headers and end plug(s). When brazing next to a collector connection Tee, remove the adapter from the Tee in order to avoid damage during brazing.

4. With completion of header brazing in each row, adapters should be installed using lock-tite high-temperature pipe sealant (with Teflon) or equivalent (do not use tape).

Before connecting headers to supply and return, completely flush the supply and return pipes. For single-row collectors, insert the end covers onto the headers (Figure 4-6) prior to attachment of feeder connections.

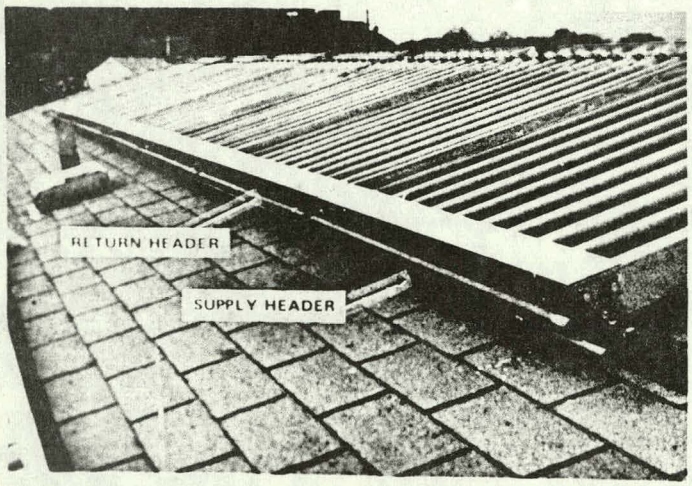

Figure 4-4. Install Headers

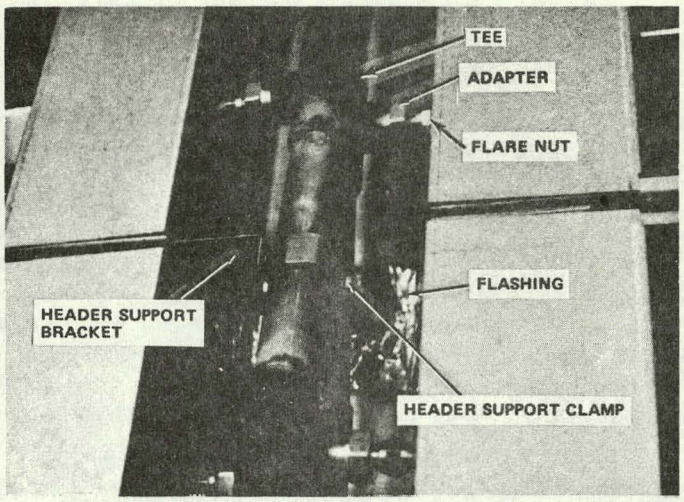

Figure 4-5. Connect Header to Collector Fittings and Attach Pipe Support Clamp

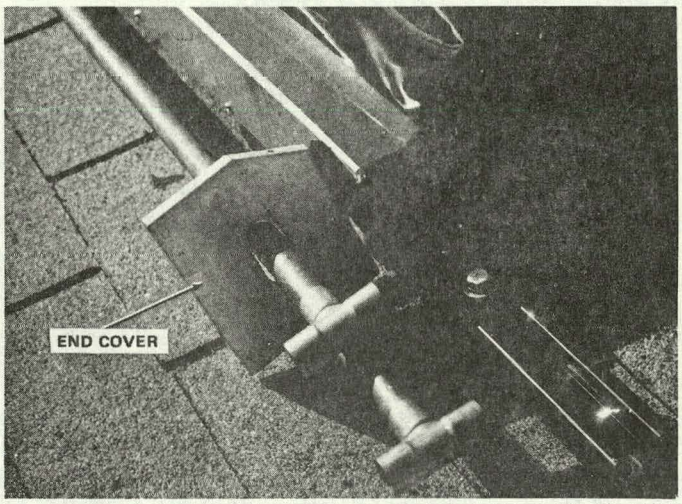

Figure 4-6. For Single Row Mounting, Insert End Covers

Caution must be exercised to prevent freezing of pipes during flushing. Flush the supply and return lines. When all header connections have been completed and the collector loop installation verified, the system is ready for a total collector system leak check.

4.3 LEAK TEST PROCEDURES

It is recommended that the collector loop be leak checked using compressed air by charging the system to 60 psig. Presence of leaks is indicated by loss of pressure within 4 hours. If leaks are indicated, all fittings and connections should be bubble tested (soap solution) and defective connections repaired.

> *Note:*
>
> *Collectors are leak checked at the factory and do not require internal leak checking.*

With the leak test completed, the collector loop can be filled to the prescribed level with working fluid (ethylene glycol/water as specified). Open the pressure relief valve to allow air to escape. When filled, the primary pump may be activated

and fluid circulated through the collector loop. A strainer in the collector loop, upstream of the pump, is mandatory during the initial operation to collect any residual installation particles. This strainer should have a bronze body and stainless steel 20-mesh screen.

Circulate the fluid for a minimum of two (2) hours. Re-inspect the entire loop for leaks and remove, inspect, clean and replace the strainer. Repeat this procedure until the strainer is clear of residual particles.

Installation Reminder

The Thermal Energy Storage Tank must be filled in the following manner to avoid an air bound tank. Add water at the top of the tank. The air displaced by the water must be exhausted at the expansion tank (normally in the Airtrol fitting). Add a corrosion inhibitor to the water.

5. FINAL ASSEMBLY AND CHECKOUT

Once leak tests have been completed and the system is operational, installation of the glass vacuum tubes may proceed. After vacuum tube installation, a functional checkout at elevated temperatures is recommended with repeated cycling to verify plumbing integrity. With completion of high-temperature checkout, insulation, header covers and protective windows (if used) should be installed.

5.1 VACUUM TUBE INSTALLATION

Vacuum tubes are shipped in separate, protective containers with 10 tubes per container. The containers should be inspected for external damage upon receipt. The tubes are individually wrapped in black plastic bags. These bags should be kept sealed until installation. Although glass tubes can be installed by one person, two installers are recommended for ease of installation.

Caution:

The glass tubes (similar to fluorescent bulbs and vacuum bottles) could implode if improperly handled. Personnel handling the tubes must wear suitable eye and hand protection. (See Section 6.5).

The following procedures are recommended for installation of the glass vacuum tubes:

1. Inspect the reflector troughs in each collector and carefully remove any debris.

2. Activate collector and storage loop pumps to minimize temperature buildup in the headers.

   If the system can not be operated, retain the black plastic bags on the tubes or cover the collector modules until the system is activated.

3. Glass installation begins by removing the wooden retainer bar. Raise the outer end of the fin-tube assembly 1-2 inches from the edge of the collector as shown in Figure 5-1. Excessive deflection will damage the collector. Slide the plastic shroud off and discard.

4. Inspect and remove grit or foreign matter from the copper fin with a cloth or soft bristle brush.

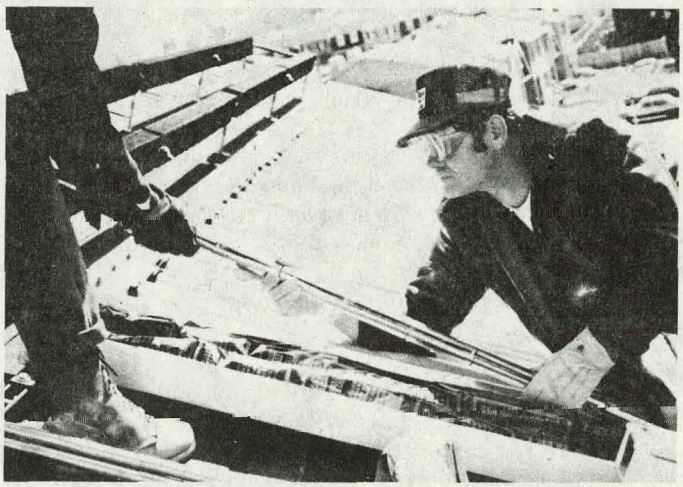

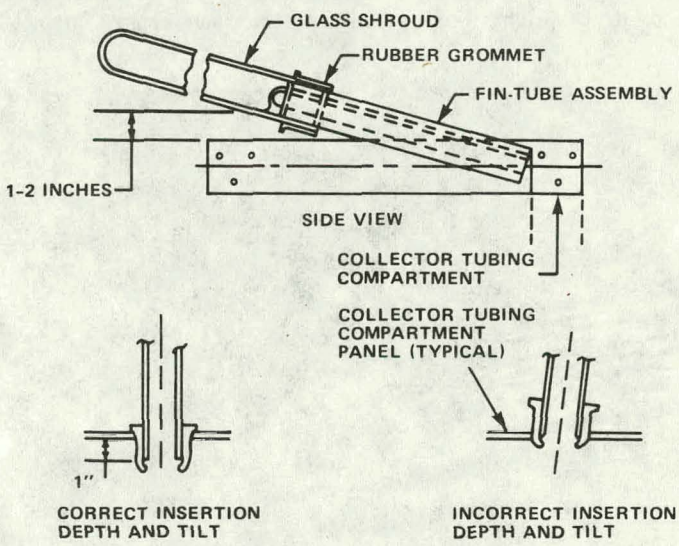

Figure 5-1. Glass Shroud Installation

5. The second installer should lightly support the fin tube to insure that it does not come in contact with the reflector trough and should continue to support the fin tube as the glass tube is installed.

6. Unseal the end of the protective black plastic bag at the open end of the glass tube and slide the glass tube over the fin tube assembly being careful not to bend or distort the cylindrical shape of the soft copper fin. Use the following procedure:

   a. Lightly compress first fin segment leading edge between the thumb and first finger just enough to insert into the glass tube.

   b. Center the open end of the glass tube over fin assembly and slowly slide on, (Figure 5-1).

   c. Continue by slightly compressing the leading edge of each fin segment as the glass tube is installed until the tube has slid past the last fin segment.

7. Seat the glass tube and grommet into the hole in the collector panel, (Figure 5-2). Insure that the grommet is completely seated (snapped in place) for weather protection, (Figure 5-1).

8. Slide off the black plastic bag. The bags should remain on the glass tubes if the system is not ready for operation.

9. Install the metal spring clip retainer over the elastomeric bumper strip on the glass tube and into the two retaining holes in the reflector, (Figure 5-3).

10. Repeat procedure until the ten tubes are installed in each collector.

5.2 OPERATIONAL CHECKOUT

It is recommended that a total system operational checkout be performed with repeated cycling to elevated temperatures for several sunny days. After removing the black plastic bags from the glass tubes and after completing checkout of the control system, operational checkout can begin. On a

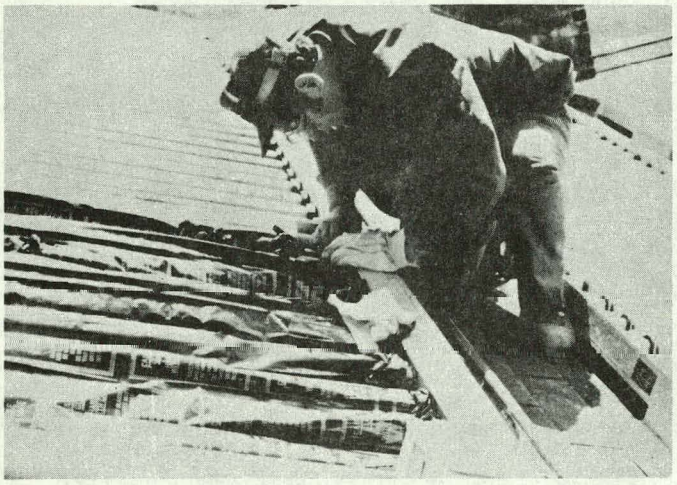

Figure 5-2. Firmly Seat Grommet into the Collector

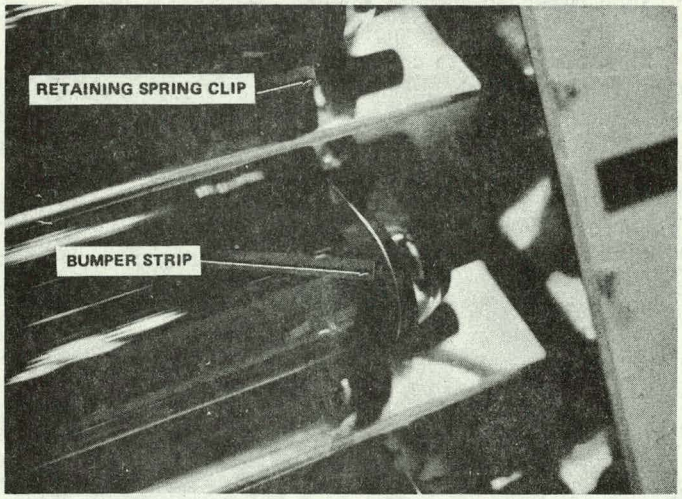

Figure 5-3. Install the Metal Spring Clip

bright day, the collector loop fluid will begin to get hot within 1/2 hour to 1 hour. Continue running in an energy collection mode without the storage pump, (P2, Fig. 6-1), running until the collector fluid temperature can be maintained between 200°F and 250°F for high-temperature tests. These tests will provide a comprehensive leak check for the collector loop as well as an operational checkout of the system. With regard to the collector loop, the following procedures are recommended:

1. After the first four hours of operation at elevated temperatures, perform a complete visual inspection of the collector loop and manifolds for leaks. If no leaks are found, proceed to Step 5.

2. If leaks are found, wait till low sunshine (or cover the collectors) and let the system cool down. Correct leaks.

3. Refill system and repeat high-temperature test procedure from start.

4. Repeat Step 1. If no leaks are found proceed to Step 5. If an additional leak is found, return to Step 2.

5. After a minimum of 2 sunny days of operation (2 high temperature cycles), check the strainer for residual particles and take a sample of the working fluid for analysis, (Section 6.2). Clean and replace the strainer. Perform a final visual inspection for leaks.

With the integrity of the loop piping under high temperature verified, the insulation may be installed and the final assembly of header covers and protective windows (if any) may proceed.

5.3 INSULATION AND COVER INSTALLATION

Pre-fabricated insulation is provided as an integral part of the General Electric header accessory kits. If General Electric header accessory kits are not used, 2 inches or more of fiberglass insulation is recommended with an appropriate moisture barrier on all outdoor headers. It is also recommended that 1-1/2 inches or more of fiberglass insulation be used on all indoor piping. The following procedures are established for use with the General Electric header accessory kits.

Note:

Select a low-sunshine day or keep the storage tank cool and pumps, (P1, P2 Fig. 6-1), running. This procedure is recommended to eliminate the hazard of hot header piping.

For single row header assemblies (Figure 5-4):

1. Remove the six sheet metal screws from the collector transition section for all collectors and without removing the covers, install the bottom channels using the same holes and screws, (Figure 5-5). The insulation is attached to this section.

2. Slide insulation away from joints to be sealed. Apply flashing (aluminized, water-proof tape) as needed inside the header channel over the gaps between collectors as a moisture barrier, (Figure 5-6). Re-position the insulation.

3. Install the covers by hooking the lips over the top of the collector transition section cover (Figure 5-7) and attach the covers to the bottom channel flanges with six (6) sheet metal screws.

4. Attach the end covers (Figure 5-8) which were installed with the piping, by positioning inside of the header cover and attaching with sheet metal screws.

Note:

End covers for the single header arrangement, if feeder connections are at the end of the row, must be installed on the header pipes during the plumbing sequence, (Figure 4-6), or must be cut to allow installation during final assembly.

5. Apply a silicone-based sealant around the gap before installing the joint covers. Install joint covers over the gaps between adjacent header covers with sheet metal screws as shown in Figure 5-4 and complete by crimping lips over the adjacent collector frames.

6. If optional protective windows (Figure 2-3) are used with the collectors, apply window standoffs to the Vee-troughs as specified. Install supplied clips and snap window into place.

For dual row header assemblies (Figure 5-9), the bottom channel should be installed before plumbing. See Section 3.4, installation procedure for dual-mounted collectors.

1. Apply flashing (aluminized, water-proof tape) inside the header channel over the gaps between channels as a moisture barrier. Slide the bottom layer of insulation under the pipes. Slit the side insulation to fit around the collector connections and insert on both sides of the pipe, (Figure 5-10).

2. Install the cover, (Figure 5-11), by hooking the lip over the top of the upper collector transition section cover and push on the center of the cover to snap the bottom lip in place over the bottom transition cover. Screw onto the end covers.

3. Install joint covers over the gaps between adjacent header covers with sheet metal screws as shown in Figure 5-9 and complete by crimping lips on slotted end over the adjacent collector frames. Also, it is recommended that a silicon-based sealant be applied at the gap interface before installing the joint covers. Apply flashing to the end closures for weather proofing.

4. If optional protective windows, (Figure 2-3), are used with the collectors, apply window standoffs to the Vee-troughs as specified. Install supplied clips and snap window into place.

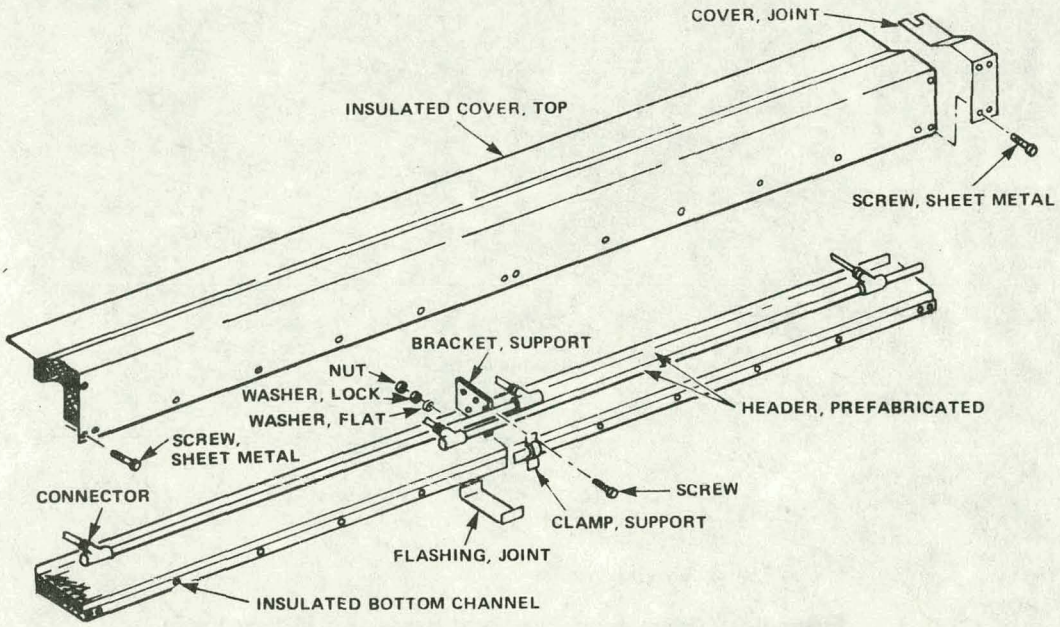

Figure 5-4. Assembly of Single Row Header Kit (8 Feet Long)

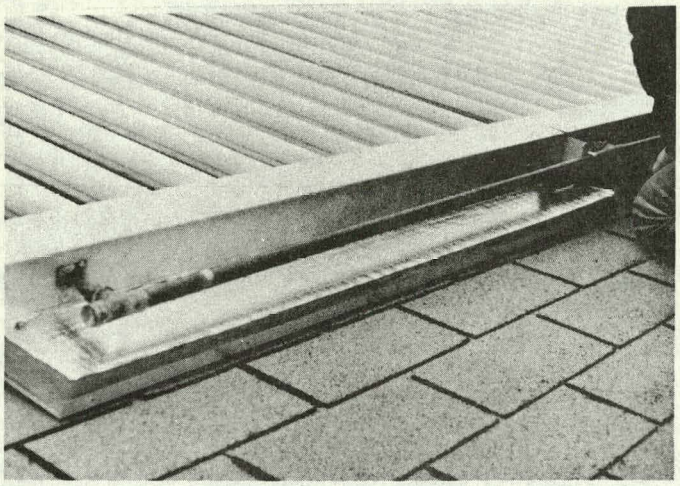

Figure 5-5. Install Bottom Channels

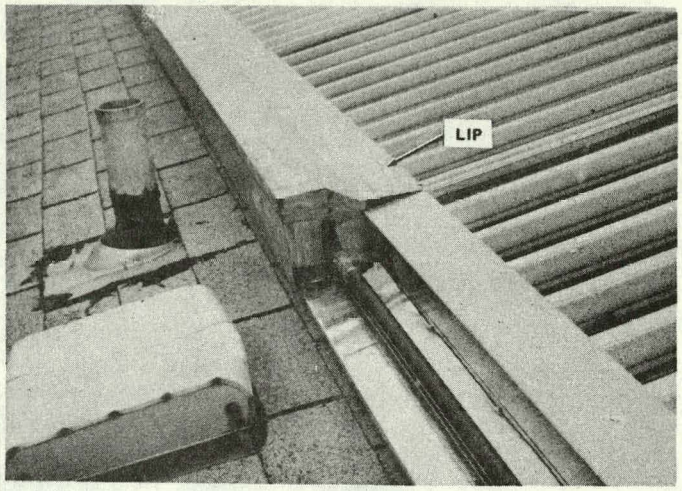

Figure 5-7. Install Cover

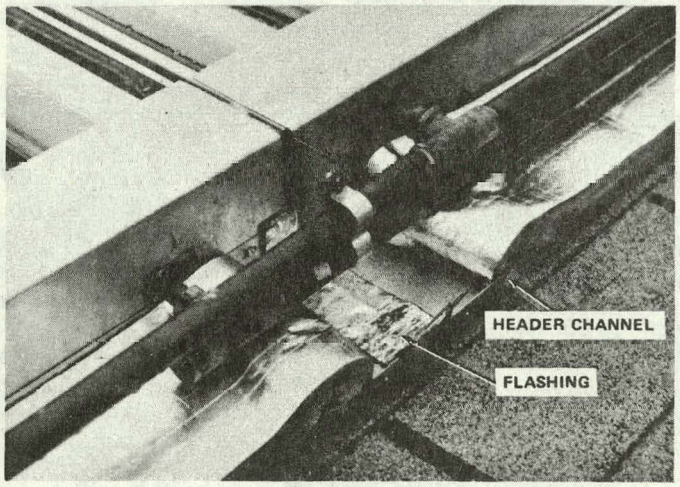

Figure 5-6. Apply Flashing

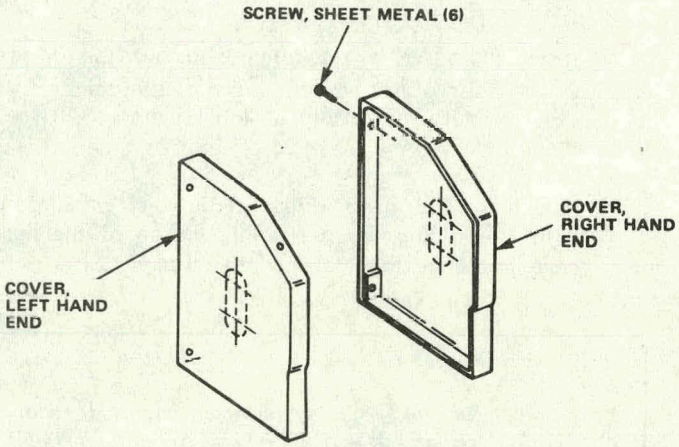

Figure 5-8. Single Row Header End Cap

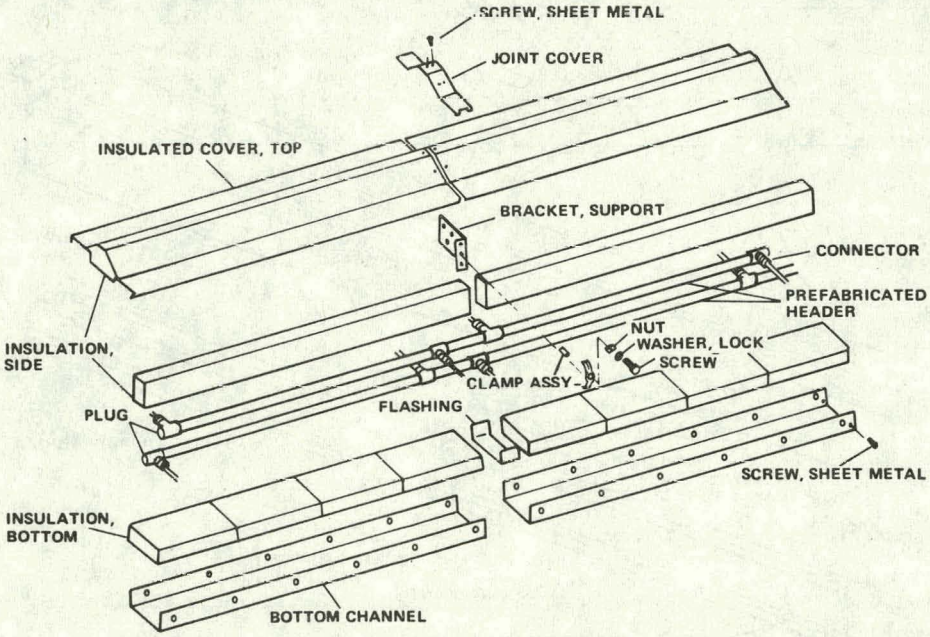

Figure 5-9. Assembly of Dual Row Header Kit (8 Feet Long)

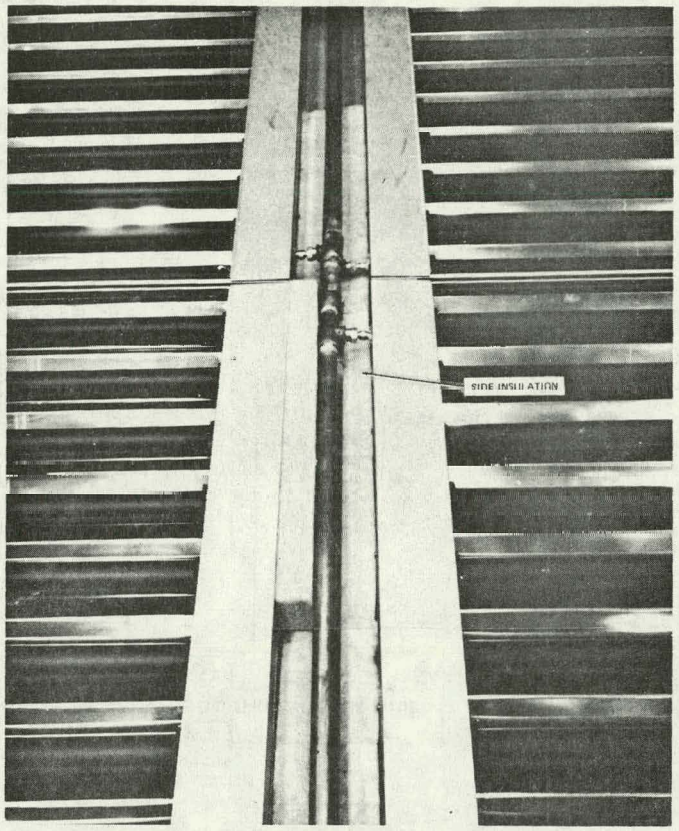

Figure 5-10. Insert Insulation Around Header Pipes

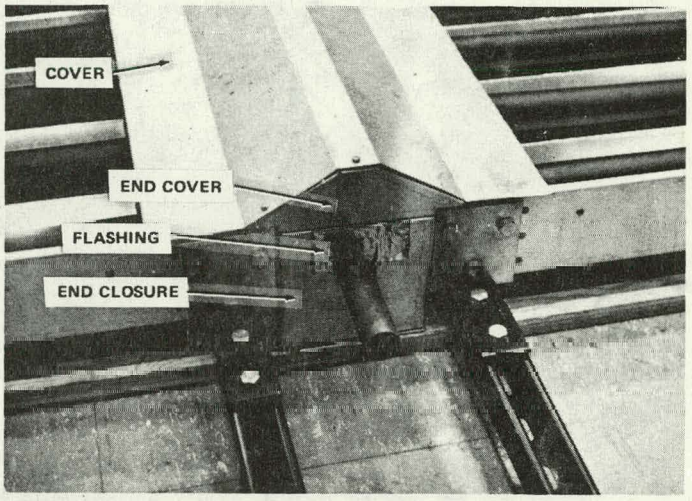

Figure 5-11. Install Cover

6. COLLECTOR LOOP OPERATION AND MAINTENANCE

6.1 COLLECTOR LOOP OPERATION

In the recommended system shown in Figure 6-1, automatic operation of the collector loop is assured by an optional solar controller. When the average solar radiation level is 35 BTU/ft^2-hr. for a period of 14 minutes, circulation of the collector loop begins with activation of Pump P1, with Valves V4 and V5 in their normally de-energized "B" flow position and open position, respectively. During this initial operating period, fluid is circulated through the solar collectors and any air is directed into the expansion tank. Two minutes after the initial energization of P1, Valves V4 and V5 are energized to the "A" flow position and the closed position, respectively. In addition, Pump P2 is started, and solar energy is transferred to the Thermal Energy Storage (TES) tank. P1 and P2 remain energized until the average insolation (continuously monitored) drops below 35 BTU/hr-ft^2 set point. In the event of a power loss, Pumps P1 and P2 stop, and Valves V4 and V5 return to the "B" flow and open position, respectively. This allows the fluid from the collectors to flow through the temperature regulator (HX6) and into the expansion tank TKX1. This flow out of the collectors is induced by the pressure differential between the hot collectors and cool condenser. During this stagnation period, collector temperatures could rise to 600°F. Water boiled out of the temperature regulator is replenished with cold water as controlled by a conventional float/valve assembly. Upon return of power, the collector loop Pump P1 is inhibited to prevent cold liquid from flashing to vapor in the collectors, if the collectors are hot.

Other controls are required to assure proper operation of the whole system.

After this period, the lockout is lifted and with sufficient solar insolation, the collector loop will return to normal operation beginning with another 2-minute fluid fill/air removal cycle.

An additional mode of operation is recommended to maximize system reliability. In the event that the storage tank is fully charged to 250°F (T4) or the collector loop exceeds 280°F (T1), Pump P2 and Valve V4 are de-energized, and the flow is diverted through the temperature regulator. Valve V5 remains closed in this mode. This mode is preferred to stopping circulation and allowing the system to go into stagnation.

6.2 PERIODIC MAINTENANCE

Collector loop fluid requires periodic inspection and/or maintenance to assure proper chemical balance and fluid level. An analysis is recommended for both water-glycol and all-water loops for the initial fill, quarterly samples for the first year, and yearly thereafter. Most commercial manufacturers of corrosion inhibitor additives offer a test kit for this purpose. Collector loop fluid composition is described in Section 2.3. Normal maintenance procedures should be used for other system components.

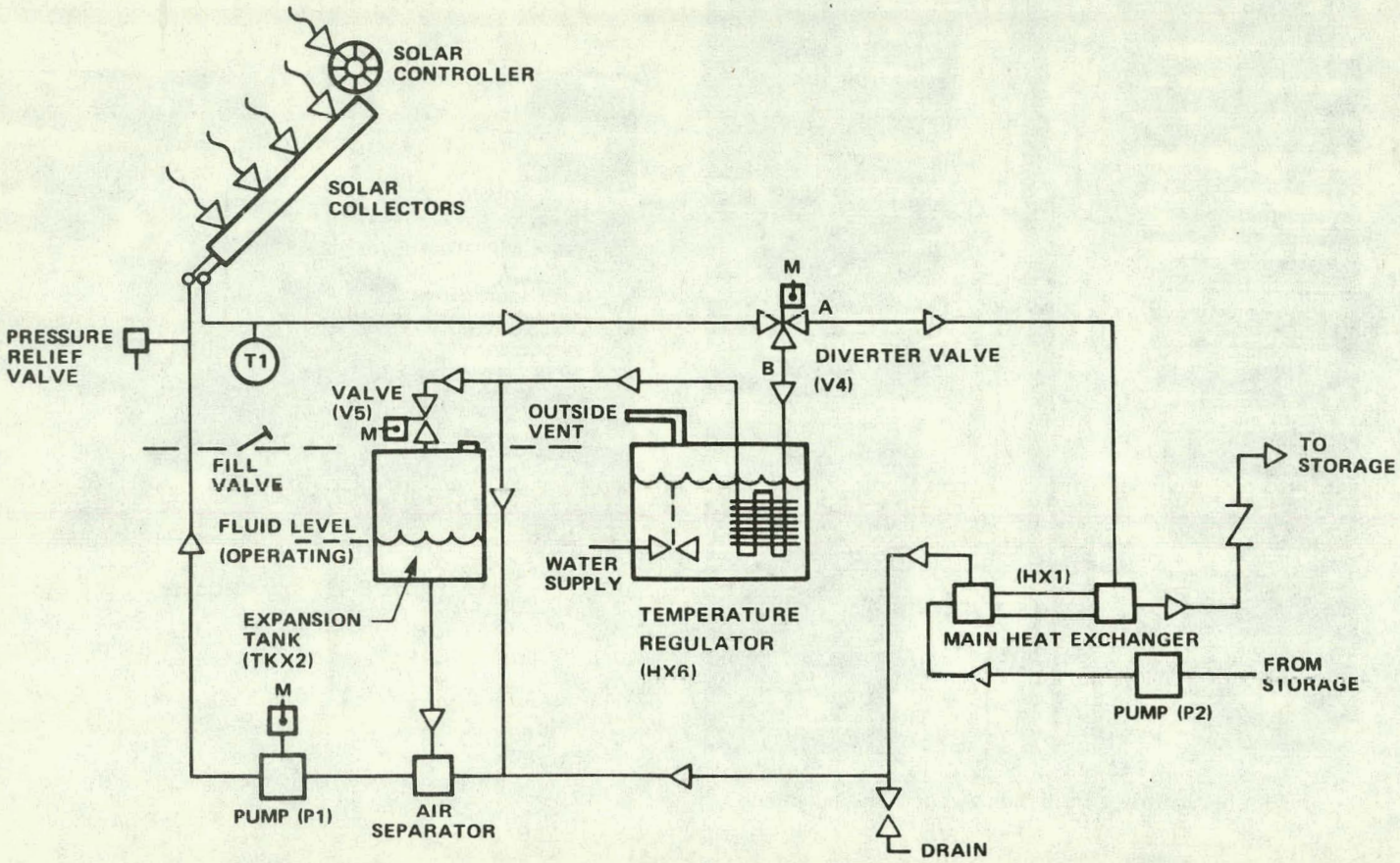

Figure 6-1. Typical Commercial and Industrial Collector Loop Schematic

6.3 PERIODIC INSPECTION

The overall collector array should be periodically inspected for broken tubes and debris buildup in the reflector troughs. The frequency of this maintenance is a function of the location of a particular solar system and its environment.

6.4 GLASS TUBE REPLACEMENT

Remove the spring clip, (Figure 5-3), holding the shroud (vacuum tube) in place. The clip is flexed into two holes provided in the collector vee-trough reflector. Deflect the tube to be replaced upward no more than 1 to 2 inches from the edge of the collector and away from the vee-trough, (Figure 5-1). The tube will now slide off the collector fin-tube in the direction away from the header assembly. The boot on the tub tube at the header end of the collector should be removed with the tube being replaced as the new tube will contain a new boot. If the old tube is broken, be sure to clean the reflector completely and wipe down the fin assembly. After wiping down the fin-tube to eliminate all grit, the new tube is simply slid over the fin-tube, seating the boot into the bulkhead hole. Re-install the spring clip.

6.5 SAFETY CONSIDERATIONS

Handling of the vacuum tubes is comparable to handling fluorescent bulbs. Caution must be exercised to avoid breakage and hot pipes. Protective gloves, clothing and safety goggles must be worn when inspecting or working on a system.

1. Glass vacuum tubes are evacuated and may implode if improperly handled.

2. In an operating system loop, fluid temperatures can reach 280°F. Hot pipes can be a safety hazard to personnel working around the pipes during final assembly and checkout. Personnel must be advised of loop temperatures and of appropriate provisions to cool down the system. Hand and eye protection is recommended when working around hot pipes.

3. Collector fluids composed of ethylene glycol are generally considered as showing a low order of toxicity except for oral ingestion. They do not vaporize at normal temperatures and, therefore, do not ordinarily constitute a hazard from inhalation. However, precautions should be taken against the vaporized fluid. Handling of waste fluid and its disposal should be in accordance with local ordinances.

7. SPECIFICATION DATA SHEET

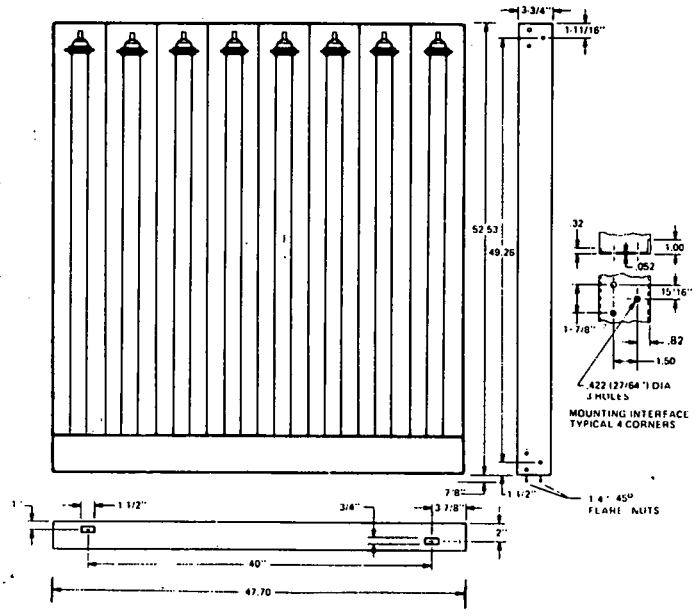

PHYSICAL

WEIGHTS

	British	SI
Frame Only	35 lbs.	16 kg
Glass Installed		
Dry	57 lbs.	26 kg
Wet	59 lbs.	27 kg

COMPOSITION

Frame	18 Ga aluminized steel (51.6 mil)
Reflector	Coilzak® aluminum (25 mil)
Insulation	Fiberglass
Fluid Lines	1/4" type L copper
Glass Tubes	008 soda lime

CONNECTIONS

Hydraulic	Brass 1/4" 45° Flare Nut
Structural Attachments	Stainless Steel or aluminum

EQUIPMENT SIZING GUIDELINES

Heat exchanger area		
Heating	.17 ft^2/module	.016 m^2/module
Cooling & Heating	.35 ft^2/module	.033 m^2/module
Storage Volume		
Heating Only	15 gallons/ module	56.8 liters/ module
Cooling & Heating	22 gallons/ module	83.3 liters/ module

OPERATIONAL

	British	SI
Insolation	0 to 400 BTU/ft^2/hr	0 to 108 langleys
Fluid		
Operating Temperature	100 to 300°F	38 to 149°C
Composition	"Good"[1] water with 35/50% Prestone® II	

MODULE DESIGN CONDITIONS

Pressure Drop-Design	7.0 psi @ 180°F	48.2 kPa @ 82°C
Minimum	5.0 psi	34.5 kPa
Flow Rate	0.22 gpm @ 180°F	0.83 l/m @ 82°C
Wind Velocity (Max)	100 mph	161 km/hr
Ice Load (Max)	13 psf	63.5 kg/m^2
Snow Load (Max)	20 psf	97.6 kg/m^2
Combined Load (Max)	33 psf	161.1 kg/m^2
Maximum System Pressure	80 psi	551 kPa

MODULE AREA

Gross (Frame)	17.4 ft^2	1.62/m^2
Net (Active)	14.8 ft^2	1.38/m^2

(1) "Good" Quality Water:

Chlorides	< 100 ppm
Sulfates	< 100 ppm
Bicarbonates	< 100 ppm
Total Hardness	< 250 ppm

ABBREVIATIONS

A	Refers to valve position
B	Refers to valve position
BTUH	BTU per hour
DHW	Domestic hot water
EMM	Energy Management Module
HVAC	Heating, ventilation and air conditioning
HX	Heat exchanger
Insolation	Solar radiation rate (sunshine intensity)
M	Motor or electrically actuated
MMBTU	10^6 BTU
MO	Month
PRV	Pressure relief valve
T	Used with a number, denotes a temperature sensor
TC-100	General Electric Vacuum Tube Solar Collector
TES	Thermal energy storage tank
TKX	Expansion tank
V	Used with a number, denotes a valve
VT	Used with a number, denotes a temperature limiting valve
x or *	Symbol for multiplication

SI CONVERSION UNITS

Length
- 1 in = 0.0254 meter (exactly)
- 1 ft = 0.3048 meter (exactly)

Area
- 1 in^2 = 6.45×10^{-4} $meter^2$
- 1 ft^2 = 0.09290 $meter^2$

Volume
- 1 in^3 = 1.639×10^{-5} $meter^3$
- 1 gal (U.S. liquid) = 3.785×10^{-3} $meter^3$

Mass
- 1 ounce-mass (avoirdupois) = 2.834×10^{-2} kilogram
- 1 pound-mass (avoirdupois) = 0.4536 kilogram

Pressure or Stress (Force/Area)
- 1 inch of mercury (60 F) = 3.377×10^3 pascal
- 1 pound-force/$inch^2$ (psi) = 6.895×10^3 pascal

Energy
- 1 foot-pound-force (ft-lbf) = 1.356 joule
- 1 Btu (International Table) = 1.055×10^3 joule

Power
- 1 watt = 1×10^7 erg/second
- 1 Btu/h = 0.2929 watt

Temperature
- $t_C = 5/9\ (t_F - 32)$

Heat
- 1 (Btu·in)/(h·ft^2·F) · 1.442×10^{-1} = W/(m·K) (thermal conductivity)
- 1 (Btu/(lbm·F) · 4.184×10^3 = J/(kg·K) (specific heat)

Solar terms
- 1 BTU/ft^2 = .271 langley = .271 cal/cm^2 = 1.136 joule/cm^2

DATE	SYM	REVISION RECORD	AUTH.	DR.	CK.
4/75	B	SHAFT LOCK	WMS	HZ	

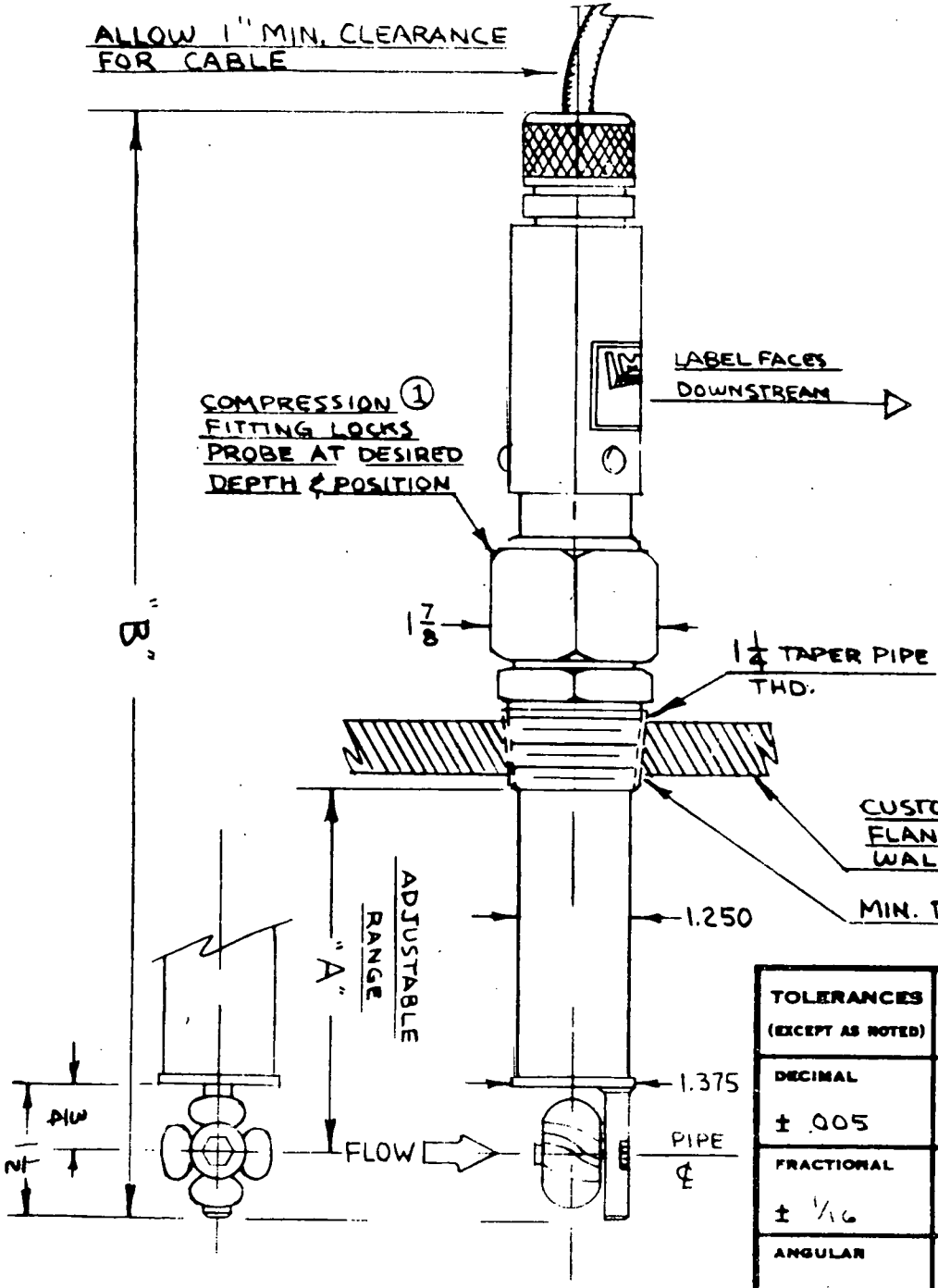

MODEL PT-200-	"A"	"B"
-6	7/8 TO 6	14 3/8
-8	7/8 TO 8	16 3/8
-12	7/8 TO 12	20 3/8
-18	7/8 TO 18	26 3/8
-24	7/8 TO 24	32 3/8

NOTES:

① ONCE TIGHTENED, DEPTH IS FIXED. NON-SWAGING FITTING AVAILABLE FOR LINE PRESSURES LESS THAN 30 PSI. ADD SUFFIX "L"

TOLERANCES (EXCEPT AS NOTED)	MEAD INSTRUMENTS CORPORATION Riverdale, N.J. 07457		
DECIMAL ± .005		SCALE 1/2	DRAWN BY HZ; APPROVED BY WMS
FRACTIONAL ± 1/16	TITLE PT-200 FLOWMETER PROBE - OUTLINE		
ANGULAR ± X	DATE 9-30-71	DRAWING NUMBER 10017	

INSTRUMENTS CORPORATION
Riverdale, N.J. 07457

SUGGESTED MOUNTINGS
FOR
PT-200 SERIES PROBE

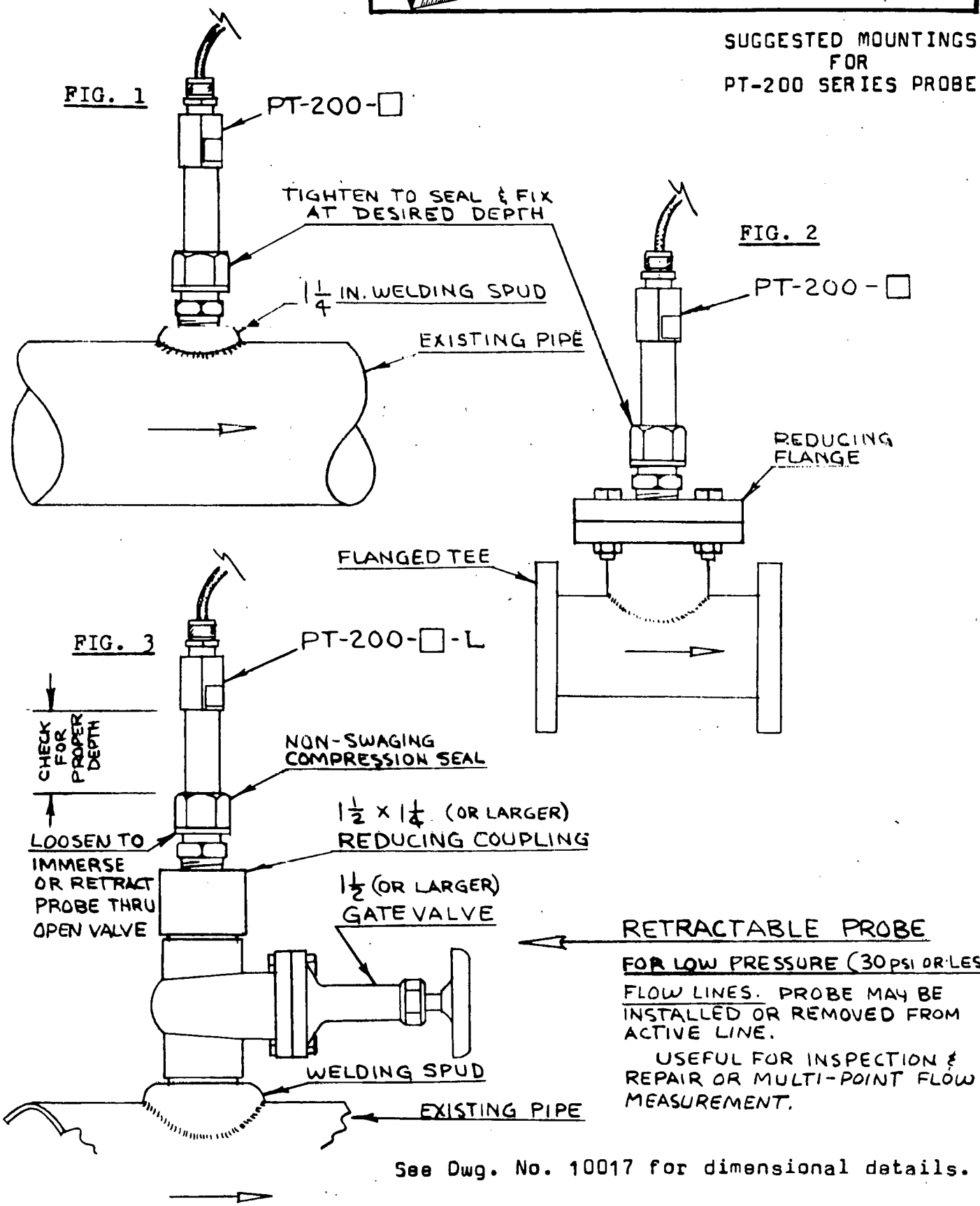

RETRACTABLE PROBE

FOR LOW PRESSURE (30 psi OR LESS) FLOW LINES. PROBE MAY BE INSTALLED OR REMOVED FROM ACTIVE LINE.

USEFUL FOR INSPECTION & REPAIR OR MULTI-POINT FLOW MEASUREMENT.

See Dwg. No. 10017 for dimensional details.

10-71

32

INSTRUCTION MANUAL

PLATE HEAT EXCHANGER

AMERICAN HEAT RECLAIMING CORP.

AMERICAN HEAT
ALFA-LAVAL THERMAL INC
AMERICAN HEAT DIVISION
ALFA-LAVAL THERMAL, INC.
P.O. Box# 860
SOMERVILLE, NEW JERSEY 08876
(201) 685-1800

FOREWORD

The plate heat exchanger is made up of a number of pressed metal plates bolted in a frame.

On each plate, a boundary gasket confines a flow path inward from one port, across the heat-transfer surface, and out the other port. Two ring gaskets confine the flow path of another fluid into and out of the space on the opposite side of the plate.

Flows in alternate spaces between plates are usually in opposite directions to achieve countercurrent heat exchange. Herringbone patterns on the plates are arranged alternately point-up and point-down. As a result, fluid flow patterns in the spaces between plates are intricate. The resulting turbulent flow enhances heat transfer.

The rigid metal covers that serve as clamping members have ports in them and appropriate gaskets to mate with fluid passages in the plates. Inlet and outlet connections are made at these covers.

All heat-transfer surfaces and all gaskets are accessible for inspection, cleaning, repair or replacement when the unit is disassembled.

Heat Exchanger Serial No. BB-116

Certified Drawing No. PHE-232

Frame Type 32-SA

Plate Material 304 S.S. (0.8 mm thick)

Gaskets NITRIL

Gasket Adhesive PLIOBOND

Bolts SA-193,B8

Carrying bars STN. STL.

CONTENTS

	Page
THEORY OF OPERATION	127
DESCRIPTION	129
INSTALLATION	130
OPERATING INSTRUCTIONS	131
MAINTENANCE	133
TROUBLE-SHOOTING	138
SPARE PARTS	
TOOLS	
DRAWINGS	

THEORY OF OPERATION

The plate heat exchanger is built the way it is for several reasons.

Perhaps the most important advantage of the plate heat exchanger from an operating point of view is that it can be taken apart completely for inspection and cleaning. In contrast to heat exchangers with welded passages or rolled tubes, it makes every surface readily accessible. All that is necessary is to drain and cool the unit, remove tie bolts and pull the movable cover back. Then, the plates can be taken out individually.

Each plate is supported laterally by points of contact with adjacent plates. The typical unit has herringbone patterns arranged V-up, then V-down from plate to plate. Such a unit can withstand fluid-to fluid differential pressures without plate deflection, even though those metal barriers are relatively thin. As a result, the plate heat exchanger conserves material. On some units, if pressures are relatively high, the gasket channels may be backed up mechanically at locations where they are not backed up by gaskets in adjacent plates.

Because the plates are patterned to create turbulent flow across their surfaces in the spaces between them, and because the flow from space to space are countercurrent, heat transfer is highly efficient. The spaces between plates are small relative to plate area, so that hold-up volume is small with relation to heat-transfer surface area. These factors combine to make the plate heat exchanger much smaller physically than, for example, a shell-and-tube heat exchanger designed for the same duty.

American Heat Reclaiming Corp. employs computerized design to match thermal and pressure drop requirements for each installation. Changing requirements can often be accommodated by adding, removing or changing plates.

Gaskets are cemented into formed channels in each plate. There are open spaces between the boundary gasket that confines the flow between plate surfaces and the two ring gaskets at the ports into the next inter-plate space. In the event of gasket leakage, therefore, fluid will be detectable externally, but neither fluid will contaminate the other.

Boundary and ring gaskets may be separate pieces. One-piece molded gaskets, with boundary and ring functions combined, have weep holes that reveal any gasket leakage between ring and boundary.

DESCRIPTION

Principal parts of the plate heat exchanger are the frame with carrying bars, a fixed cover, a movable cover and a pack of gasketed plates. Tie bolts between the two covers clamp the plates in place. In accordance with OSHA requirements, a protective shroud is supplied. It covers the heat exchanger to protect personnel in the event of spraying leakage.

Each pass is made up of plates that have four ports. They accomodate one fluid in and out plus the other fluid in and out. In a heat exchanger with several passes for one of the fluids, the passes are separated by special turning plates. One port of a turning plate is blanked. A connection corresponding to a blanked-off port is then made at the movable cover.

The end plates are special, too. There are no flow paths between end plates and covers. These special plates have appropriate ports and gasketing so that they serve only to make connections with the covers.

For heat exchanger performance characteristics, see the Certified Drawing.

The plate heat exchanger is designed, tested and stamped in accordance with the latest ASME Unfired Pressure Vessel Code, Section VIII, Division I.

INSTALLATION

Plate heat exchangers are assembled and tested at the American Heat Reclaiming Corp. plant in Lykens, Pennsylvania. They arrive ready to be installed and hooked up.

Set the unit in place on a level foundation.

See the Certified Drawing for piping connections. This same drawing shows the pack length dimension - - the distance between inside faces of the covers. Check that the covers are exactly that far apart all around their peripheries. Tighten or loosen bolts if a correction is needed.

Allow provisions for thermal expansion when laying out pipe connections. A valve should be provided in each inlet line. Clean foreign matter out of pipe and fittings. Make up the piping accurately so that it is not necessary to distort any line in order to mate the flanges.

The heat exchanger is then ready for service.

OPERATING INSTRUCTIONS

CAUTION

If the heat exchanger is operated with wide temperature fluctuations, the gaskets will be subjected to strains that may shorten their life. They may leak during the thermal shock periods, even though the leakage may stop when stable operating temperatures are reached.

Units are provided with aluminum shrouds to protect personnel from leakage.

At startup, the flows of both fluids should be increased gradually, and they should both build up at the same time. Inlet valves on both fluid lines should be provided for this purpose.

If the fluids are pumped, start the pumps first against closed valves. Then - - with either a pumped system or one with another pressure source - - crack both inlet valves slightly. Open them both gradually and slowly until operating pressures and temperatures have been reached.

When shutting down, close both inlet valves slowly and at the same time. If this is not practical, slowly close the valve for the heating medium first.

If the heat exchanger is to stand idle for a considerable length of time, drain it and loosen the tie bolts. Then tighten them to enough tension so that plates and gaskets are in moderate contact. This will keep dust and foreign matter out of the unit.

If either fluid is corrosive or if

there is danger of freezing, take a shutdown unit apart and clean it. Then reassemble it with plates and gaskets in contact, but not tightened up. (See the MAINTENANCE Section.)

MAINTENANCE

The plate heat exchanger may be disassembled periodically for inspection and cleaning while other equipment in the same system is shut down. On the other hand - - based on operating experience - - it may be left in service until the appearance of one of the symptoms listed in the TROUBLE-SHOOTING Section.

DISASSEMBLY

Drain and cool the unit to room temperature before attempting disassembly. Facilities should be provided for flushing out both sides of the heat exchanger with cold water.

Loosen and remove any piping connections on the movable cover. Take off the shroud.

Loosen nuts on the cover tie bolts at the four corners first. Back the nuts off and remove the bolts. Then loosen nuts in the center portion of each side of the cover about ¼-inch. Leave them, then loosen the other tie bolts about ¼-inch. Continue this process until the nuts are slack. Finally, back off the nuts on the center bolts and remove them.

Now, the movable cover can be pulled clear of the plates. Separate the plates from one another carefully. All gaskets should stay in their channels - - should not stick to adjacent plates. If a short length of gasket should come loose, cement it back in place immediately. But if the entire gasket is loose or if it seems to be damaged, pull the plate and do a complete repair job.

Verify that plate numbers are legible and that plates are in order. Mark any plates that have obscure numbers. Looking toward the fixed cover, plates should be numbered at their upper left-hand corners, and the number sequence should start at the fixed cover.

CLEANING THE PLATES

Unless there is some problem material to remove, the plates can be cleaned without removing them from the unit. Use a hand brush or a rotary power brush. Brushes with nylon or stainless steel bristles are often used.

CAUTION

> Do not use brushes with carbon steel bristles. Do not use steel wool. Be very careful not to damage the gaskets.

REPLACING GASKETS

Remove plates with loose or damaged gaskets. Scrape out any pieces of gasket material that may remain in the channels. Clean out all traces of oil, grease or foreign matter from the channels. Use a nylon or stainless steel wire brush and a solvent such as toluol, xylol, trichlorethylene or ethyl acetate.

Wipe the channels dry. To check whether they are completely grease-free, put some water in them. If they are grease-free, the water will wet their surfaces, and it will form a thin film instead of gathering in nodules. When the channels are clean and grease-free, wipe them dry again.

Apply a bead of cement in each channel about ⅛-inch in diameter. Use a flexible plastic container with a spout on it. Let the cement dry until tack time.

Apply cement to the gaskets the same way. Let them dry.

NOTE

Gaskets are color-coded at about the 3-o'clock positions to identify their compositions. Color codes of different suppliers may not correspond. The color-coded side should be out. Apply cement to the opposite side, and be very careful to keep cement off the color-coded side.

When the cement is ready, fit gaskets into their channels. If any stretching is necessary, do it in the middle of the straight long sides - - not at the corners. Press the gaskets down all around to be sure that they are firmly cemented in place.

REPLACING PLATES

If a plate is damaged, it can be replaced, but the replacement must be of the same type. It should be marked with the same number as the plate it replaces. Consult American Heat Reclaiming Corp. to obtain the proper replacement.

In an emergency, a standard plate (with four ports) can be removed. Then, an adjacent standard plate must also be removed in order to keep the flow pattern right. Capacity of the unit will be reduced very slightly, but operation will otherwise be normal. The pack length dimension will be reduced, of course, as each pair of plates is removed. Multiply the former pack length

$$\text{by } \frac{\text{Number of plates now}}{\text{Number of plates before}}$$

to calculate the new pack length.

ASSEMBLY

If several plates were removed, put them back in the frame in the proper numerical order. Move the pack of plates away from the fixed cover. Apply the parting agent, DC 200 silicone oil to the backs of the gasket channels of the first plate. Give them a very thin coat where they will mate with gaskets on the fixed cover. Slide the plate against the cover. Now, do the same thing to the second plate and to all the rest of the plates. Slide each one against its mating plate as you work. Look at the gaskets each time to see where the mating surfaces will be.

If all the plates were removed, arrange them in numerical order. The numbers are stamped on the gasket sides - - the sides that face you as you look at the fixed cover. They are at the upper left-hand corners of the plates. Number 1 goes against the fixed cover. Assemble the others against it in numerical sequence. Handle the plates carefully to avoid damaging them or their gaskets.

Apply the parting agent, DC 200 silicone oil to the backs of gasket channels where they will mate with other gaskets. Do this, plate-by-plate as you insert them in the frame and push the pack toward the fixed cover.

CAUTION

While applying silicone oil and assembling the plates one-by-one, inspect each plate to be sure that all gaskets are sound and that there is no foreign matter on surfaces that will mate with gaskets of plates already in place.

TIGHTENING THE MOVABLE COVER

The important things to watch for when tightening the tie bolts are that the movable cover should not be cocked at an angle and that bolt tensions should be built up evenly. Clean the bolt threads and oil them lightly.

Push the movable cover into place against the pack of plates. Insert the bolts and run the nuts up until there is some resistance.

Measure the pack length between covers all around. Tighten the nuts that will bring the two covers parallel.

Now, continue to tighten all the nuts a turn or so at a time, keeping the covers parallel. Check the pack length dimension as you proceed.

The pack length dimension on the Certified Drawing is a minimum. The unit should not be tightened more than this. Plates should be drawn up to achieve metal-to-metal contact, but they should not be deformed.

Finally, check the dimension between covers all around to be sure that they are still parallel. If they are not, make them so.

Before putting the unit back into service, hydrostatically test both sides independently if this is feasible. ASME test pressure is 1.5 times design pressure, and American Heat Reclaiming Corp. tests to this standard.

TROUBLE-SHOOTING

SYMPTOM	PROBABLE CAUSE	CORRECTIVE ACTION
High pressure drop in either stream	Fouling with material deposited by fluid	Back flush the unit Front flush the unit Chemically clean affected passages Disassemble the unit and clean the plates
Leakage	Damaged plate Broken gasket Loose tie bolts	Repair or replace the plate Install a sound gasket Tighen to specified pack length
Contamination of one fluid by the other	Perforation of one or more plates	Replace the defective plates

FORM U-1 MANUFACTURERS' DATA REPORT FOR PRESSURE VESSELS
As Required by the Provisions of the ASME Code Rules, Section VIII, Division 1

1. Manufactured by American Heat Reclaiming Corporation Lykens, Pennsylvania
(Name and address of manufacturer)

2. Manufactured for Garden State Racing Association Cherry Hill, New Jersey
(Name and address of purchaser)

3. Location of installation Cherry Hill Inn Cherry Hill, New Jersey
(Name and address)

4. Type Vert. (Horiz., or vert. tank) Vessel No. 13339 (Mfgr's Serial No.) --- (CRN) PHE-232 (Drawing) 10346 (Nat'l Brd No.) Year Built 1978

5. The chemical and physical properties of all parts meet the requirements of material specifications of the ASME BOILER AND PRESSURE VESSEL CODE. The design, construction, and workmanship conform to ASME Rules, Section VIII, Division 1 1977 (Year) and Addenda to Current (Date) and Code Case no. _____.

Special service per UG-120(d) _____

Manufacturers' Partial Data Reports properly identified and signed by Commissioned Inspectors have been furnished for the following items of the report: _____
(Name of part, item number, mfgr's name and identifying stamp)

Items 6-11 incl. to be completed for single wall vessels, jackets of jacketed vessels, or shells of heat exchangers

6. ~~Shell~~ Plate: Material SA-240,304 (Spec No., Grade) Nom. Thickness .0315 in. Corrosion Allowance NA in. ~~Diam.~~ Width 1 ft. 4 in. Length 3 ft. 8 in. (Overall)

7. Seams:
Longitudinal NA (Dbl Sngl) R.T. _____ (Spot or Full) Efficiency ____% H.T. Temp ____ F Time ____ Girth _____ (Dbl., Sngl.) R.T. _____ (Spot, Partial, or Full) No. of Courses ____

8. Heads: (a) Material SA-515,70 (Spec No., Grade) (b) Material Same (Spec. No., Grade)

	Location (Top, Bottom, Ends)	Minimum Thickness	Corrosion Allowance	Crown Radius	Knuckle Radius	Elliptical Ratio	Conical Apex Angle	Hemispherical Radius	Flat Diameter	Side to Pressure (Convex or Concave)
(a)	Sta.	1-5/8"						15-3/4" x 51"		Flat
(b)	Mov.	1-5/8"						15-3/4" x 48-3/4"		Flat

If removable, bolts used (describe other fastenings) SA 193,B8;100,000(10) 1"D. Tobin Bronze Nuts
(Material, Spec. No., Gr., Size, No.)

9. Type of Jacket _____ Proof Test _____

10. Jacket Closure _____ (Describe as ogee & weld, bar, etc.) If bar, give dimensions _____ If bolted, describe or sketch.

11. Constructed for max. allowable working pressure 150 psi at max. temp. 280°F Min. temp. (when less than -20 F) ____ F.
Hydrostatic, ~~pneumatic, or combination~~ test pressure 225 psi.

Items 12 and 13 to be completed for tube sections

12. Tubesheets: Stationary Material _____ (Spec. No., Gr.) Diam. ____ (Subject to pressure) in. Nominal Thick. ____ in. Corrosion Allow. ____ in. Attachment _____ (Welded, Bolted)

Floating Material _____ (Spec. No., Gr.) Diam. ____ in. Nominal Thick. ____ in. Corrosion Allow. ____ in. Attachment _____

13. Tubes: Material _____ (Spec. No., Gr.) O.D. ____ in. Nominal Thickness ____ in. or gauge Number _____ Type _____ (Straight or "U")

Items 14-17 incl. to be completed for inner chambers of jacketed vessels or channels of heat exchangers

14. Shell: Material _____ (Spec. No., Gr.) Nominal Thickness ____ in. Corrosion Allowance ____ in. Diam. ____ ft. ____ in. Length ____ ft. ____ in.

15. Seams:
Longitudinal _____ (Dbl., Sngl.) R.T. _____ (Spot or Full) Efficiency ____% H.T. Temp ____ F Time ____ Girth _____ (Dbl., Sngl.) R.T. _____ (Spot, Partial or Full) No. of courses ____

16. Heads: (a) Material _____ (Spec No., Grade) (b) Material _____ (Spec No., Grade)

	Location (Top, Bottom, Ends)	Minimum Thickness	Corrosion Allowance	Crown Radius	Knuckle Radius	Elliptical Ratio	Conical Apex Angle	Hemispherical Radius	Flat Diameter	Side to Pressure (Convex or Concave)
(a)										
(b)										

If removable, bolts used (describe other fastenings) _____
(Material, Spec. No., Gr., Size, No.)

17. Max. allowable working pressure ____ psi at max temp. ____ F. Min. temp ____ F. Hydro. test pressure ____ psi.

Items below to be completed for all vessels where applicable

18. Safety Valve Outlets: Number _____ Size _____ Location _____

This form may be obtained from the National Board of Boiler and Pressure Vessel Inspectors, Columbus, Ohio.

NB-26
Rev. 3

19. Nozzles:

Purpose (Inlet, Outlet, Drain)	Number	Diam. or Size	Type	Material	Nominal Thickness	Flange Material	How Attached
Inlets	2	3"	Flg.	SA-403,304L	Sch. 10	SA-105	Welded
Outlets	2	3"	"	"	"	"	"

20. Inspection Openings:

Manholes No. _____ Size _____ Location _____

Handholes No. _____ Size _____ Location _____

Threaded No. _____ Size _____ Location _____

21. Supports: Skirt ____ (Yes or no) Lugs ____ (No) Legs ____ (No) Other Cover Pad (Describe) Attached Welded to Sta. Cover (Where and how)

22. Remarks: Hydro-tested per UG 99 (b). Vessel is a Heat Exchanger. Designed and constructed in accordance with ASME Code, Section VIII, Div 1-1977.

CERTIFICATE OF COMPLIANCE

We certify that the statements made in this report are correct and that all details of design, material, construction, and workmanship of this vessel conform to the ASME Code for Pressure Vessels, Section VIII, Division 1.

Date 5-12-78 Signed Amer. Heat Recl. Corp. (Manufacturer) by [signature] (Representative)

"U" Certificate of Authorization No. 1793 expires March 30, 19 81.

CERTIFICATE OF SHOP INSPECTION

Vessel made by Amer. Heat Recl. Corp. at Lykens, Pennsylvania

I, the undersigned, holding a valid commission issued by the National Board of Boiler and Pressure Vessel Inspectors and the State or Province of Pennsylvania and employed by Commercial Union Insurance Company Boston, Mass. of _____ have inspected the pressure vessel described in this Manufacturers' Data Report on 5-8, 5-10, 19 78, and state that, to the best of my knowledge and belief, the Manufacturer has constructed this pressure vessel in accordance with ASME Code, Section VIII, Division 1.

By signing this certificate neither the Inspector nor his employer makes any warranty, expressed or implied, concerning the pressure vessel described in the Manufacturers' Data Report. Furthermore, neither the Inspector nor his employer shall be liable in any manner for any personal injury or property damage or a loss of any kind arising from or connected with this inspection.

Date May 12, 1978

Signed [signature] (Inspector) RICHARD A. LYNCH Commissions NB-7967 & WC-2516 (Nat'l Board, State, Province and No.)

CERTIFICATE OF COMPLIANCE FOR FIELD WORK

We certify that the statements made in this report are correct and that all details of design, material, construction, and workmanship of this vessel conform to the ASME Code for Pressure Vessels, Section VIII, Division 1.

Date _____ Signed _____ (Manufacturer) by _____ (Representative)

"U" Certificate of Authorization No. _____ expires _____, 19 _____.

CERTIFICATE OF FIELD ASSEMBLY INSPECTION

I, the undersigned, holding a valid commission issued by the National Board and Pressure Vessel Inspectors and the State or Province of _____ and employed by _____ of _____ have compared the statements in this Manufacturers' Data Report with the described pressure vessel and state that parts referred to as data items _____, not included in the certificate of shop inspection, have been inspected by me and that, to the best of my knowledge and belief, the Manufacturer has constructed and assembled this pressure vessel in accordance with ASME Code, Section VIII, Division 1.

The described vessel was inspected and subjected to a hydrostatic test of _____ psi.

By signing this certificate neither the Inspector nor his employer makes any warranty, expressed or implied, concerning the pressure vessel described in this Manufacturers' Data Report. Furthermore, neither the Inspector nor his employer shall be liable in any manner for any personal injury or property damage or a loss of any kind arising from or connected with this inspection.

Date _____

Signed _____ (Authorized Inspector) Commissions _____ (Nat'l Board, State, Province and No.)

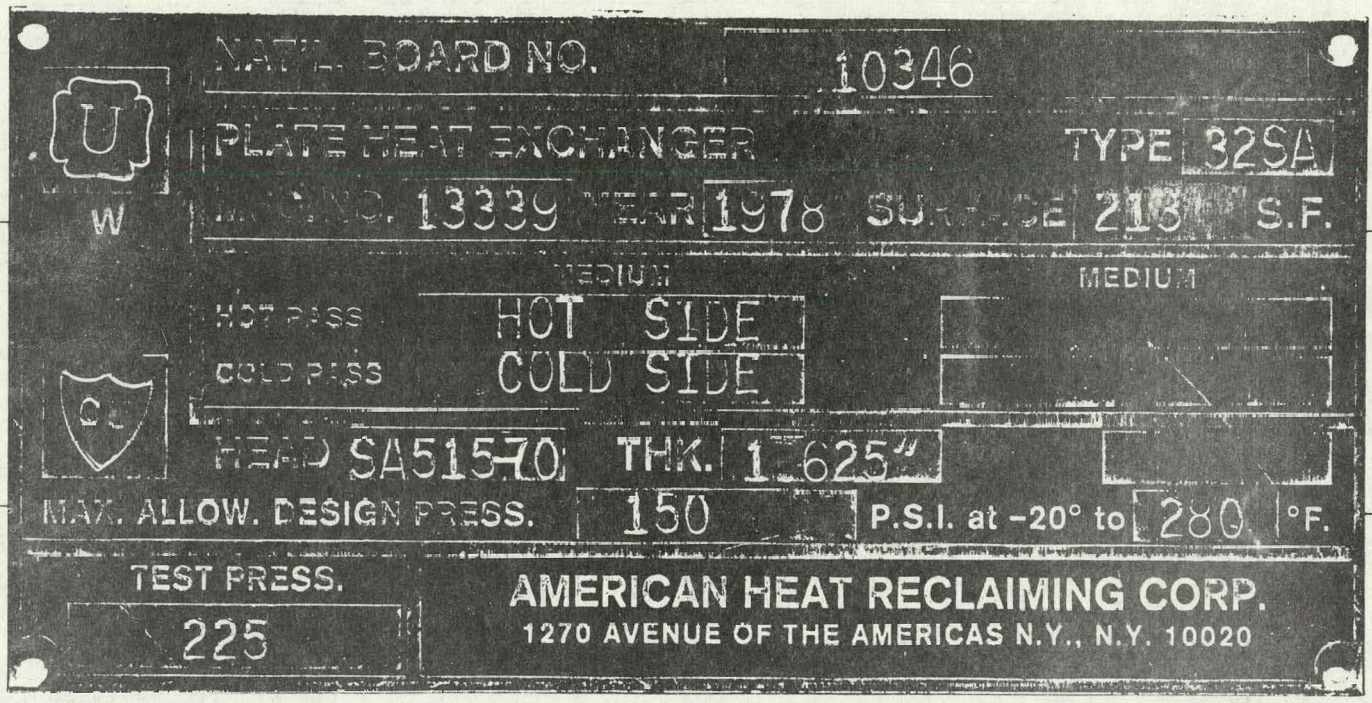
NAT'L BOARD NO. 10346
PLATE HEAT EXCHANGER
TYPE 32SA
W
13339
1978
S.F.
MEDIUM
MEDIUM
HOT PASS
HOT SIDE
COLD PASS
COLD SIDE
HEAD SA515-70
THK. 1.625"
MAX. ALLOW. DESIGN PRESS.
150
P.S.I. at -20° to
280
°F.
TEST PRESS.
225
AMERICAN HEAT RECLAIMING CORP.
1270 AVENUE OF THE AMERICAS N.Y., N.Y. 10020

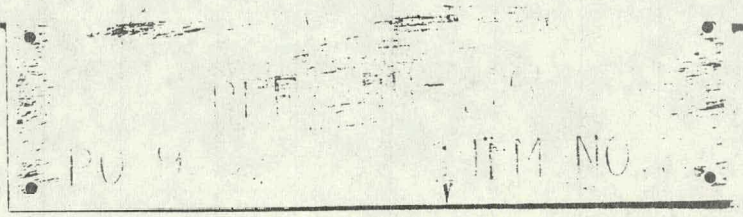

AGERSTA 991671

TILLVERKNINGSINTYG
WORKS CERTIFICATE

BLK 90

Kundbestnr och ref/Customers Order No and Ref	Orderdatum/Orderdate	Vårt ordernr/Our Order No
91249	77.05.06	731-0427

300167

Material	Kund/Customer
Kallvalsat rostfritt bandstål R 350.10 Nat. Transfer Plates	Alfa-Laval AB Box 1008 221 03 LUND.

Chargenr/Cast No	Order pos	Dimension	Kvant/Quantity	Lev dat/Date of Deliv
7851-57 Tv. 716738	01	430.5 x 0.8 x 1154	12470 kg.	77.05.12

Analys % / Analysis %

Chargenr/Cast No	C	Si	Mn	P	S	Cr	Ni	Mo	W	Co	V	Cu
7851-57	.039	.53	1.09	.029	.003	18.4	8.7	.36				

Hållfasthetsprov/Mechanical Tests

Chargenr/Cast No		Sträckgräns/Yield Strength N/mm²	Brottgräns/Tensile Strength N/mm²	Förlängning %/Elongation % 1/1N%	5xd	Kontraktion/Area Reduct	Hårdhet/Hardness HB	
7851-57		304 314	686 696	52.5 52.5				

REVIEWED BY

DATE

Härmed intygas att provning av materialet givit ovanstående resultat / We hereby certify, that the material, tested at the works laboratory, have yielded the results above

Ort/Place	Datum/Date	Avdelning/Department	Namn/Signature
Långshyttan	77.05.12		

8031507 6 4502 Parolett Länsstyrelsen 403601

DIVISION OF JOSLYN MFG. AND SUPPLY CO.

JOSLYN STAINLESS STEELS

2400 TAYLOR ST. WEST FORT WAYNE, IND. 46804

F.O.B. FORT WAYNE, INDIANA

Cover Bolts

JOSLYN F.W. NO.	ORDER DATE	PRI-CO	W/B OR B/L	SHIP VIA	INVOICE NO	CUSTOMER'S ORDER NO.
67825	06/10/77	P			07 0010	S 33705 04P
	SHIPPED DATE	SHIP NO	PARTIAL/COMP	FREIGHT EQUALIZED WITH	INVOICE DATE	
	07/25/77		COMPL	BALTIMO	07/25/77	

SOLD TO
INDUSTRIAL SERVICE CENTERS INC
ACCOUNTING DEPT
5000 E MONUMENT ST
BALTIMORE MARYLAND 21205

SHIP TO
INDUSTRIAL SERVICE CENTERS INC
THOMPSON & WHEATSHEAF STS.
PHILADELPHIA PENNSYLVANIA 19137

PO 6990

CUSTOMER NO	PRIORITY		
09707			
SALESMAN	A.I.S.I.	STATE	TAX
15	166	38	04

REPRESENTATIVE MECHANICAL AND CHEMICAL TEST REPORT

HEAT	SIZE	SHAPE FINISH	LBS ORD	LBS SHIP	HARDNESS	TENSILE STR. PSI	YIELD STR. PSI	% ELONG	% R.A.
74271	.910	-RD--CG-	4900	0	BHN163	82700	38600	64.5	78.

TYPE	C	Mn	P	S	Si	Cr	Ni	Mo	Cu	Co	OTHER	OTHER	OTHER	HARDENABLE
304	.053	1.37	.027	.019	.045	18.29	8.74	.25	.20	.013				

SPECIFICATIONS:

ASTMA 479 ASMESA 479

HEAT	SIZE	SHAPE FINISH	LBS ORD	LBS SHIP	HARDNESS	TENSILE STR. PSI	YIELD STR. PSI	% ELONG	% R.A.

TYPE	C	Mn	P	S	Si	Cr	Ni	Mo	Cu	Co	OTHER	OTHER	OTHER	HARDENABLE

SPECIFICATIONS:

WE CERTIFY THAT THIS MATERIAL HAS BEEN PROCESSED AND TESTED IN ACCORDANCE WITH THE REFERENCED SPECIFICATION AND IS IN CONFORMANCE WITH ALL REQUIREMENTS.

THIS MATERIAL MEETS THE SPECIFICATIONS CHECKED BELOW:

- [ ] ASTM-A 193-75
- [ ] ASTM-A 276-75
- [ ] ASTM-A 182-75
- [ ] ASTM-A 320-74
- [X] ASTM-A 479-75
- [ ] ASTM-A 582-75
- [ ] ASTM-A 314-75
- [ ] QQS 763C
- [ ] QQS 764B
- [ ] MILS 23195B
- [ ] MILS 7720
- [ ] MILS 7720 (CHEM ONLY)
- [ ] MILW 52263
- [ ] SW 300M

- [ ] ASME SECT II
- [ ] ASME SECT III
- [ ] ASME-SA 320-74
- [X] ASME-SA 479-74-67A
- [ ] ASME-SA 182-75
- [ ] ALLOY PMI-OK
- [ ] ULTRASONIC TEST-OK
- [ ] LIQUID PENETRANT TEST-OK
- [ ] MAGNETIC PARTICLE-OK
- [ ] FREQ/SEV _____
- [ ] FERRITE _____ MAX
- [ ] IMPACTS _____

REVIEWED BY

DATE

- [ ] MACRO ETCH - OK
- [ ] EMBRITTLEMENT TEST - OK
- [ ] FREE OF CONTINUOUS CARBIDE NETWORK
- [ ] FREE OF MERCURY CONTAMINATION
- [X] SOLUTION ANNEALED AT 1950 °F 1-1/2 HOURS AND WATER QUENCHED
- [ ] INTERGRANULAR TEST - OK
- [ ] NITRIC ACID TEST - OK
- [ ] BEND TEST - OK
- [ ] MAGNETIC PERMEABILITY _____
- [ ] GRAIN SIZE _____

I HEREBY CERTIFY THAT THE REPORTED FIGURES ARE CORRECT, AS CONTAINED IN THE RECORDS OF THE CORPORATION

CLERK
R. STINNETT
CERTIFICATION CLERK R. Stinnett NOTARY PUBLIC _____

BETHLEHEM STEEL CORPORATION

METALLURGICAL DEPARTMENT

REPORT OF TEST AND ANALYSIS

ATTN	SHIPMENT NO.	DATE SHIPPED	CAR OR VEHICLE NO	
AOWS PT.	409- 19244	11/15/77	GRDC GRAHAM DAVID	PG 1

SOLD TO
AMERICAN HEAT RECLAIMING CORP
BOX 10
LYKENS PA 17048

SHIP TO
AMERICAN HEAT RECLAIMING CORP
LYKENS PA

Cavi

NOTE	SERIAL NUMBER	PAT. NO.	HEAT NUMBER	SIZE AND QUANTITY NO. PCS.	THICKNESS	WIDTH OR DIA.	LENGTH	WEIGHT	YIELD KSI	TENSILE STRENGTH KSI	ELONG. IN.	ELONG. %
	CO# 7780					1460#1371	BD# 203-7684A			9674/0623		
	2966 ASME SA515 GR 70 PUB 1977 EDITION											
01	B 65484		492B0891	2	1 3/ 4	66	208	13626	40.0	73.0	2	2[illegible]
01	B 67362		496B2201	2	1 3/ 4	66	208	13626	40.0	75.0	2	27
02	B 67007		422B4751	2	1 3/ 4	66	200	13102	47.0	81.0	2	24

NOTE

SERIAL NUMBER	PAT. NO	HEAT NUMBER	THICKNESS	HARD BHN	CHARPY IMPACT TYPE	SIZE	DIR	TEST TEMP.	ENERGY (FT. LBS.) 1	2	3	AVG.	DUCTILITY (%) 1	2	3	LA 1

CHEMICAL ANALYSIS

HEAT NUMBER	C	Mn	P	S	Si	Cu	Ni	Cr	Mo	V	Cb	N	Al
492B0891	.29	.73	.009	.025	.200								
496B2201	.32	.80	.005	.029	.250								
422B4751	.32	.84	.020	.027	.260								

I certify that the above results are a true and correct copy of records prepared and maintained by Bethlehem in compliance with the requirements of the specification cited above.

E.R.SHELLY
CHIEF METALLURGIST

10380

AREA CODE 201
LIFFORD 7-4700
CHARTER 9-7575
ELIZABETH 3-3000
CORTLANDT 7-4200

AUTHORIZED SIGNATURE

Mapple

Middlesex Stainless Fittings

Corrosion Resistant Piping Specialties

OFFICE AND WAREHOUSE: 11 COTTERS LANE
EAST BRUNSWICK, N. J. 08816

MAILING ADDRESS: P. O. BOX 1106
NEW BRUNSWICK, N. J. 08903
TWX 710-480-5443

CUSTOMER American Heat Div. -- Alfa Laval Thermal
P.O. NUMBER 8640

4-18-78
E.B.

MATERIAL CERTIFICATION

THIS IS TO CERTIFY THAT THE MATERIAL ON THE ABOVE REFERENCED PURCHASE ORDER WAS MANUFACTURED TO AND MEETS THE REQUIREMENTS OF:

SA-182 ___ ITEM NUMBER(S) ___

SA-312 X ITEM NUMBER(S) 1,2,3,4,5,6,

SA-403 ___ ITEM NUMBER(S) ___

GRADE	C.MAX	MN. MAX	P.MAX	S.MAX	SI.	NICKEL	CHROME	MO.	OTHE
304	.08	2.00	0.045	0.030	1.00	8.0-11.0	18.0-20.0		
304L	.035	2.00	0.045	0.030	1.00	8.0-13.0	18.0-20.0		
316	.08	2.00	0.045	0.030	1.00	10.0-14.0	16.0-18.0	2.0-3.0	
316L	.035	2.00	0.045	0.030	1.00	10.0-14.0	16.0-18.0	2.0-3.0	
317	.08	2.00	0.045	0.030	1.00	11.0-15.0	18.0-20.0	3.0-4.0	
317L	.035	2.00	0.045	0.030	1.00	11.0-15.0	18.0-20.0	3.0-4.0	

	TENS.MIN.PSI	YLD.MIN.PSI	ELONG.MIN %	RED.AREA%	OTHER
304	75,000	30,000	30	50	
304L	70,000	25,000	30	50	
316	75,000	30,000	30	50	
316L	70,000	25,000	30	50	
317	75,000	30,000	30	50	
317L	70,000	25,000	30	50	

1. 1/2" Sch. 40 Weld Pipe GrTP304 Ht:1550331 Trent
2. 6" Sch. 40 Weld Pipe GrTP316L Ht:P51082 Trent
3. * 3" Sch. 10 Type "C" Stubend GrTP304L Ht:3139,3080,2652,2803 Stub-ends
4. 2" Sch. 10 Type "C" Stubend GrTP316L Ht:3209 Stub-ends
5. 6" Sch. 10 Type "C" Stubend GrTP316L Ht:2754 Stub-ends
6. 2" Sch. 10 Weld Pipe GrTP316L Ht:264,3436 Trent
7.
8.
9.
10.

REVIEWED BY

JM 4/20/78
DATE

N. J. AREA CODE 201
CLIFFORD 7-4700
CHARTER 9-7575
ELIZABETH 3-3000
CORTLANDT 7-4280

AUTHORIZED SIGNATURE

Middlesex Stainless Fittings

Corrosion Resistant Piping Specialt

OFFICE AND WAREHOUSE: 11 COTTERS LANE
EAST BRUNSWICK, N. J. 08816

MAILING ADDRESS: P. O. BOX
NEW BRUNSWICK, N. J. 08
TWX 710-480-5443

CUSTOMER American Heat Division
P.O. NUMBER 8501

DATE 3-16-78
BRATCH E.B.

Supplied

MATERIAL CERTIFICATION

THIS IS TO CERTIFY THAT THE MATERIAL ON THE ABOVE REFERENCED PURCHASE ORDER WAS MANUFACTURED TO AND MEETS THE REQUIREMENTS OF:

SA-182 X ITEM NUMBER(S) 1,2,3,4

SA-312 X ITEM NUMBER(S) 5,6,7

SA-403 ___ ITEM NUMBER(S) ___

GRADE	C.MAX	MN. MAX	P.MAX	S.MAX	SI.	NICKEL	CHROME	MO.	CO.
304	.08	2.00	0.040	0.030	1.00	8.0-11.0	18.0-20.0		
304L	.035	2.00	0.040	0.030	1.00	8.0-13.0	18.0-20.0		
316	.08	2.00	0.040	0.030	1.00	10.0-14.0	16.0-18.0	2.0-3.0	
316L	.035	2.00	0.040	0.030	1.00	10.0-14.0	16.0-18.0	2.0-3.0	
317	.08	2.00	0.040	0.030	1.00	11.0-14.0	18.0-20.0	3.0-4.0	
317L	.035	2.00	0.040	0.030	1.00	11.0-14.0	18.0-20.0	3.0-4.0	

	TENS.MIN.PSI	YLD.MIN.PSI	ELON.MIN %	RED.AREA%	OTHER
304	75,000	30,000	30	50	
304L	70,000	25,000	30	50	
316	75,000	30,000	30	50	
316L	70,000	25,000	30	50	
317	75,000	30,000	30	50	
317L	70,000	25,000	30	50	

1. 3" 150# ASA R/F S/O Flange GrF316L Ht:D1172 Ideal
2. 4" 150# ASA R/F S/O Flange GrF316L Ht:HJ804-1 Taylor Forge
3. 1" 6000# Scrd. Sq. Hd. Plug GrF316L Ht:CLU Camco
4. 3" 150# ASA R/F S/O Flange GrF304L Ht:HJ834-2 Taylor Forge
5. 2" Sch. 10 Type "C" Stub End GrTP304L Ht:3081,3093 Stub-Ends Inc.
6. 2" Sch. 10 Weld Pipe GrTP304L Ht:057804 Conmet
7. 3" Sch. 10 Weld Pipe GrTP304L Ht:824087 Conmet
8.
9.
10.

REVIEWED BY

3/30/78
DATE

Horace T. Potts Company

ESTABLISHED 1815

STEEL AND STEEL PRODUCTS

ERIE AVENUE AND D STREETS
PHILADELPHIA, PA. 19134

SOLD TO AMERICAN HEAT REGENERATING CORP.
800 Chestnut Street
P. O. Box 10
Lititz, Pa. 17543

Date January 12, 1978
Customers Order No. 183189
Our Order No. 850053-01

ITEM	DESCRIPTION
CODE	90° Elbow
DEPX	6 Pcs. 3" Sch 10 Specialcon 90° Ell WP304LW

PO 5189

ASTM A-403
ASME A-312
Solution Annealed

ITEM — CHEMICAL COMPOSITION

HEAT NO.	C	MN	P	S	SI	CR	NI	MO	CU
8042491	.015	1.71	.025	.002	.62	18.40	9.49		

ITEM — MECHANICAL PROPERTIES

YIELD POINT P. S. I.	TENSILE STRENGTH P. S. I.	ELONGATION % IN 2"	REDUCTION OF AREA %	BRINELL	ROCKWELL
38,500	75,000	75			

REVIEWED BY

DATE

We hereby certify that the above data is a true copy of the data furnished us by the producing mill or the data resulting from tests performed in approved laboratories.

Horace T. Potts Company

By _____ AUTHORIZED AGENT

Flanges

Waterman Machine and Manufacturing Company — Forged steel pipe flanges

1215 Germantown Ave., Philadelphia, Pa. 19122 • 215-763-0900

CONFORMANCE
METALLURGICAL MATERIAL CERTIFICATION

Date of Report: APRIL 11, 1978

Customer Name: AMERICAN HEAT

Customer Order No.: 8611

Waterman Machine and Manufacturing Company hereby certifies that, to the best of our knowledge and belief, the product furnished is in accordance with material specification ASTMSA-105, dimensional specification ANSI B16.5, and marked in accordance with specification MSS SP-25.

ASTMSA-105

C MAX.	Mn	P MAX.	S MAX.	Si MAX	TENSILE	YIELD	ELONGATION	REDUCTION
.35	.60-1.05	.040	.050	.35	70,000 P.S.I. MIN.	36,000 P.S.I. MIN.	22 MIN.	30% MIN.

John S. Gregory

John S. Gregory, President

REVIEWED BY

DATE

CERT. 12-16-77

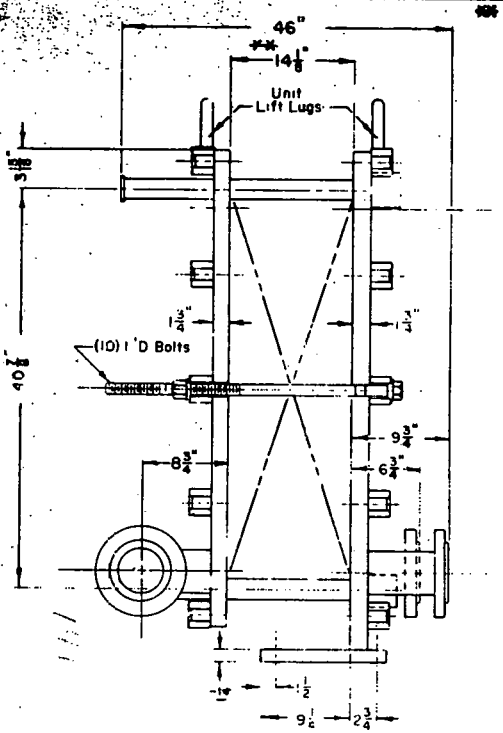

** CALCULATED DIMENSION- NOT FIXED

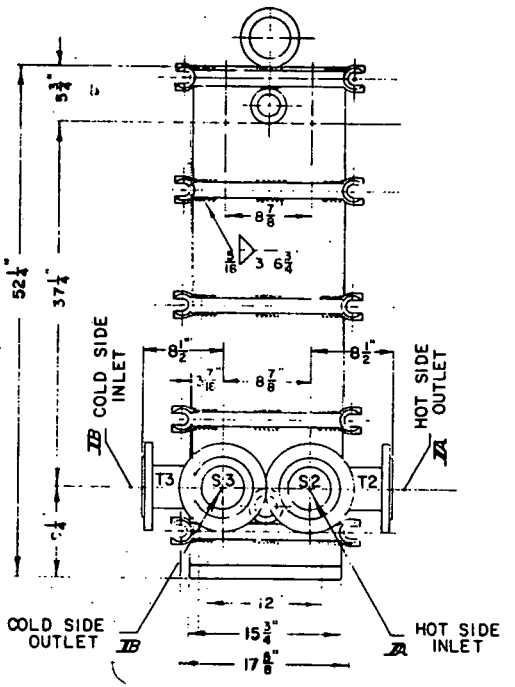

MOUNTING PAD DETAIL

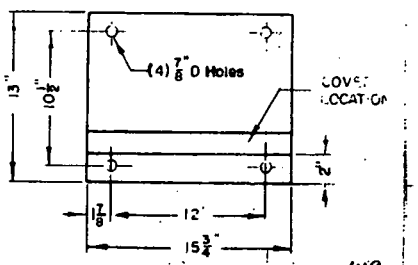

WEIGHT, Approx	1450 Lbs
DESIGN TEMP	280 °F
DESIGN PRESS	150 PSI
TEST PRESS	225 PSI
HEATING SURFACE	213.6 SQ FT
NUMBER OF PLATES (Type 32 x 0.8 mm)	62
PLATE MATERIAL	304 SS
* LENGTH OF CARRYING BARS — TOP	41"
BOTTOM	38"
* LENGTH OF COVER BOLTS	39"

NOTE

ALL FLANGES SA-105, 150# ANSI
ALL COVERS SA-515-70 THICKNESS BEFORE MACHINING
CARRYING BARS - STN STL
COVER BOLTS - SA-193 B8
NUTS - TOBIN BRONZE
GASKETS - NITRIL (62 Field 128 Port Gkts)
(Field 5 Port Gkts)
BOLT HOLES TO STRADDLE SHOWN CENTER LINES
ALL CBN STL PARTS SAND BLASTED AND PAINTED WITH G E NO 1272 METAL PRIMER, RED IRON OXIDE

DESIGNED, CONSTRUCTED AND N B STAMPED IN ACCORDANCE WITH A S M E CODE, SECTION VIII - 1977

NOZZLE SCHEDULE
ALL NOZZLES SA-403, 304L SCH.10

MARK	NO REQ'D	SIZE	RATING	FACING	REMARKS
H					
G					
F					
E					
D					
C					
B	2	3"	150#	L.J.	VANSTONE
A	2	3"	150#	L.J.	VANSTONE

DESIGNED FOR 74 PLATES
UNIT PROVIDED WITH SPLASH PROTECTOR
DIMENSION TOLERANCE ± 1/8"

CERTIFIED PRINT FOR
COLM ENGINEERING
Approved For Fabrication Or Erection
Date 3-16-78

Date	Sym	Revision	By
4-78	A	REVISED NOZZLE MAT'L & SIZE	D.B.

AMERICAN HEAT DIVISION ALFA-LAVAL
SOMERVILLE, N.J.
Customer COLM ENGINEERING
Order No 9303 Item No 2
TYPE 32 SA PLATE HEAT EXCHANGER
Dwn By D.B. Chk'd App'd Job No AP-7074
Date 3-15-78 Mfg No. BB-116 Dwg No PHE-232

149

Y - The Numbers Determine The Blind Corners - Holes Punched As Shown

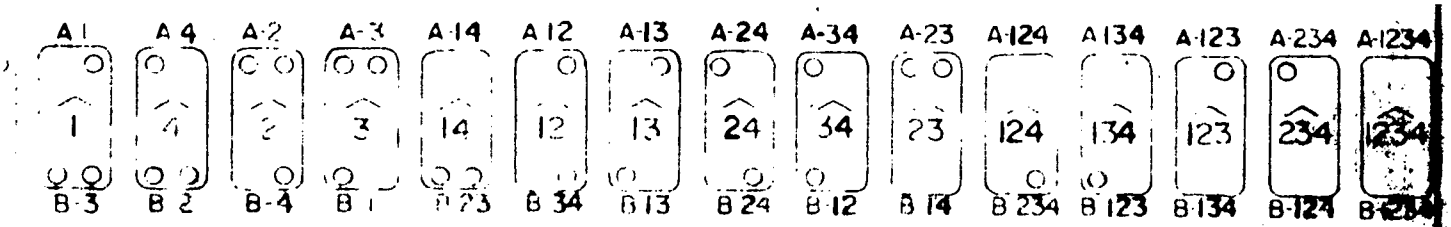

PLATE MAT'L:	304 S.S. - 0.8mm	GASKET MAT'L	NITRIL Type - 32
REQUIRED NO OF PLATES:	62"	HOT SIDE, FIELD "	No. 31
MAX NO. OF PLATES:	74	" " , PORT "	No 64
BOLT LENGTH:	39"	COLD SIDE, FIELD "	No 31
CARRYING BAR LNG., Upper:	41"	" " , PORT "	No 62
CARRYING BAR LNG., Lower:	38"	TYPE 31 PORT "	No 2

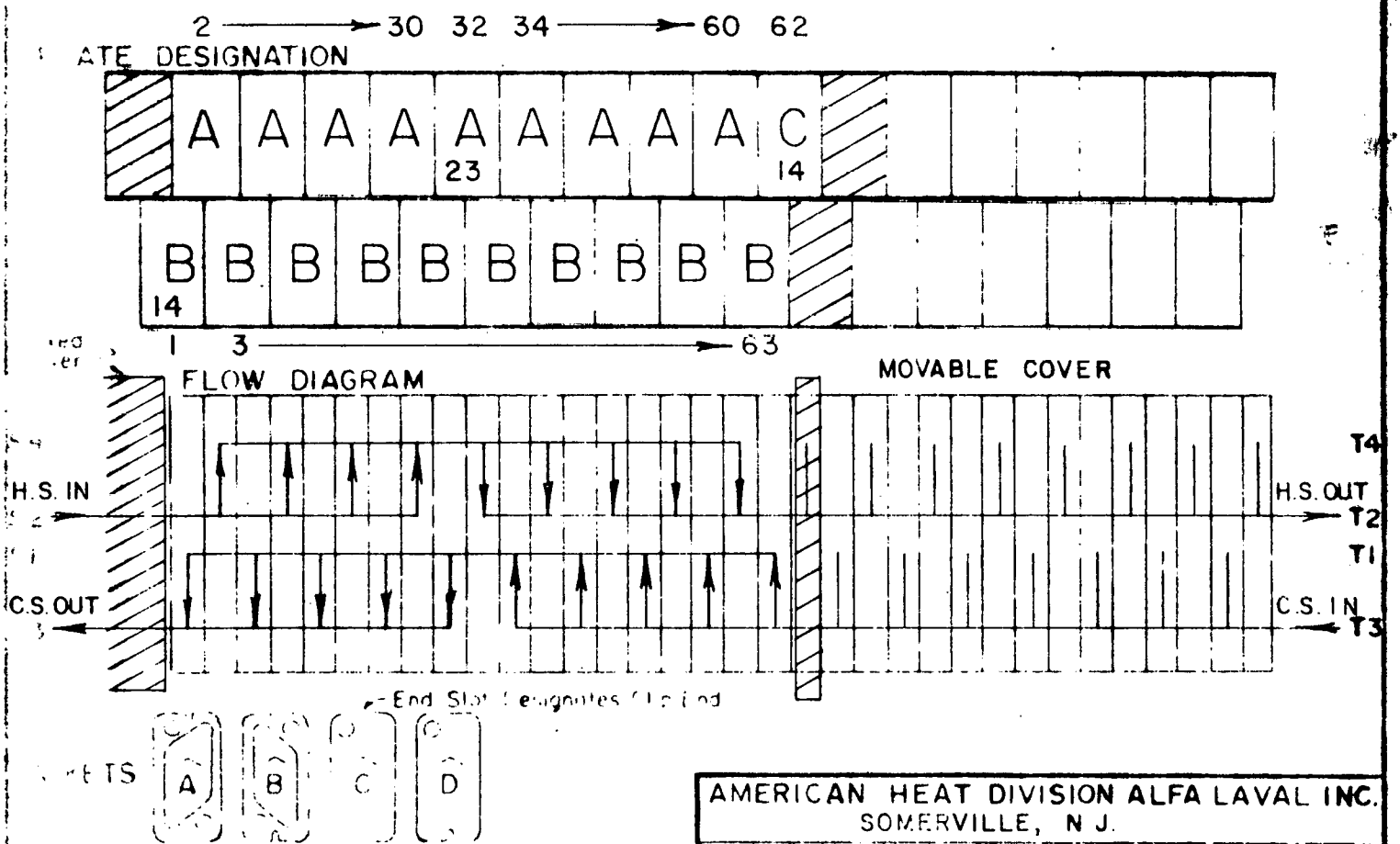

AMERICAN HEAT DIVISION ALFA LAVAL INC. SOMERVILLE, N.J.			
CUSTOMER COLM ENGINEERING			
ORDER NO 9303		ITEM NO 2	
Plate Arrangement & Flow Diagram-Type 32 SA			
DWN BY D.B.	CHK'D	APP'D	JOB NO AP-7074
DATE 3-16-78	Mfg No. BB-116		DWG NO PF-1

A	Revised Port Numbering	H.H.
IM	REVISION	BY

KEY - The Numbers Determine The Blind Corners - Holes Punched As Shown

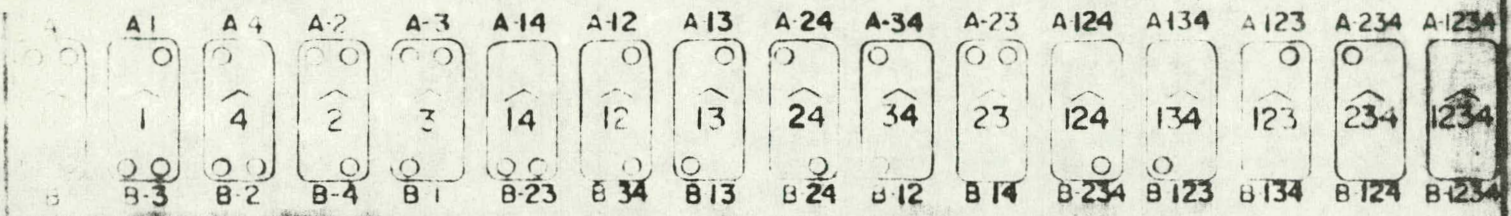

PLATE MAT'L:	304 S.S. - 0.8mm	GASKET MAT'L:	NITRIL	Type - 32
REQUIRED NO. OF PLATES:	62"	HOT SIDE, FIELD	"	No. 31
MAX NO. OF PLATES:	74	" " , PORT	"	No. 64
BOLT LENGTH:	39"	COLD SIDE, FIELD	"	No. 31
CARRYING BAR LNG., Upper:	41"	" " , PORT	"	No. 62
CARRYING BAR LNG., Lower:	38"	TYPE 31 PORT	"	No. 2

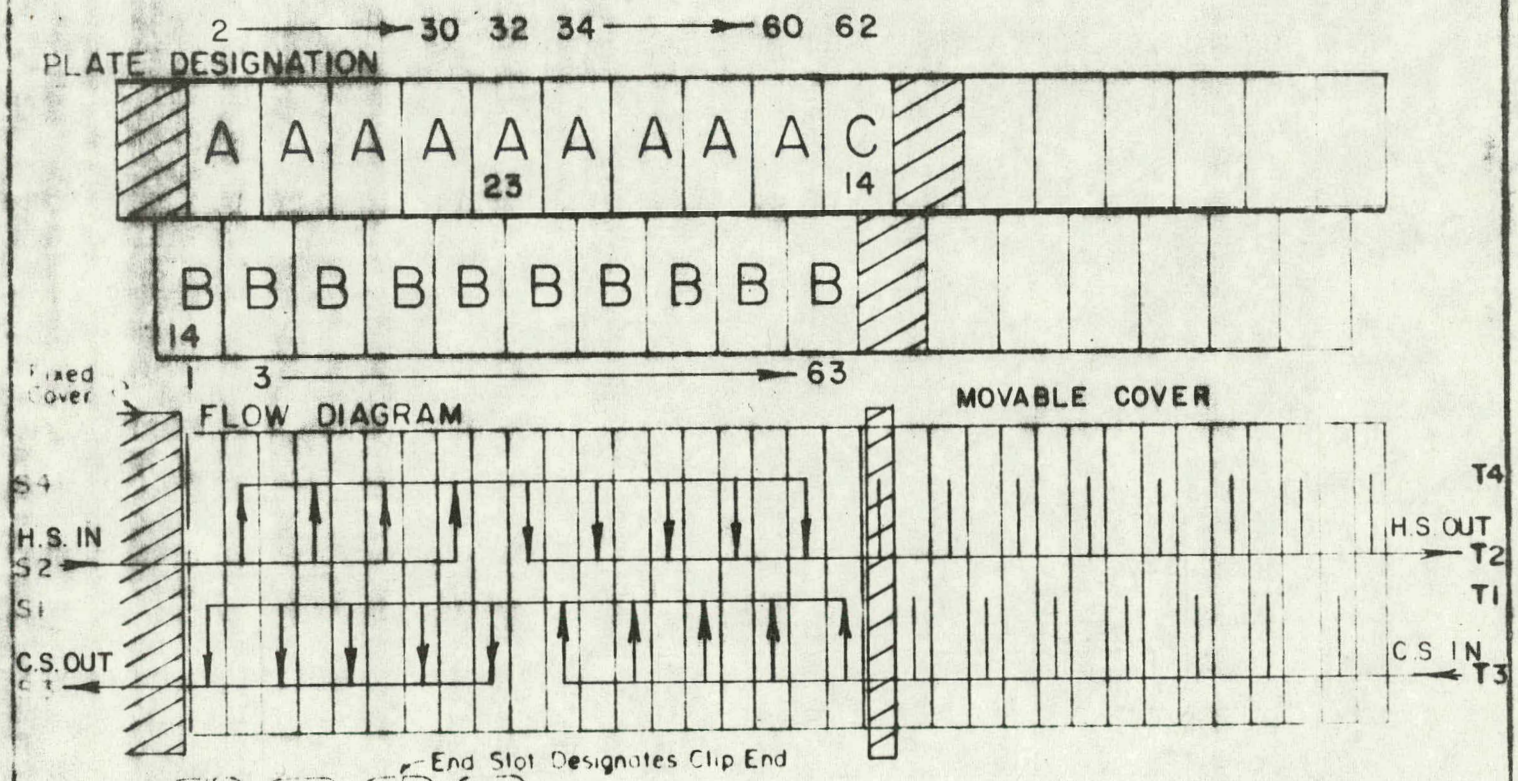

GASKETS

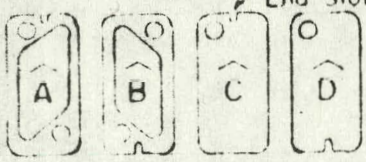

AMERICAN HEAT DIVISION ALFA LAVAL INC.
SOMERVILLE, N.J.

CUSTOMER: COLM ENGINEERING

ORDER NO. 9303 | ITEM NO. 2

Plate Arrangement & Flow Diagram Type 32SA

9-77	A	Revised Port Numbering	H.H.	DWN BY D.B.	CHK'D	APP'D	JOB NO. AP-7074
DATE	SYM	REVISION	BY	DATE 3-16-78	Mfg No. BB-116	DWG. NO. PF-1

5630

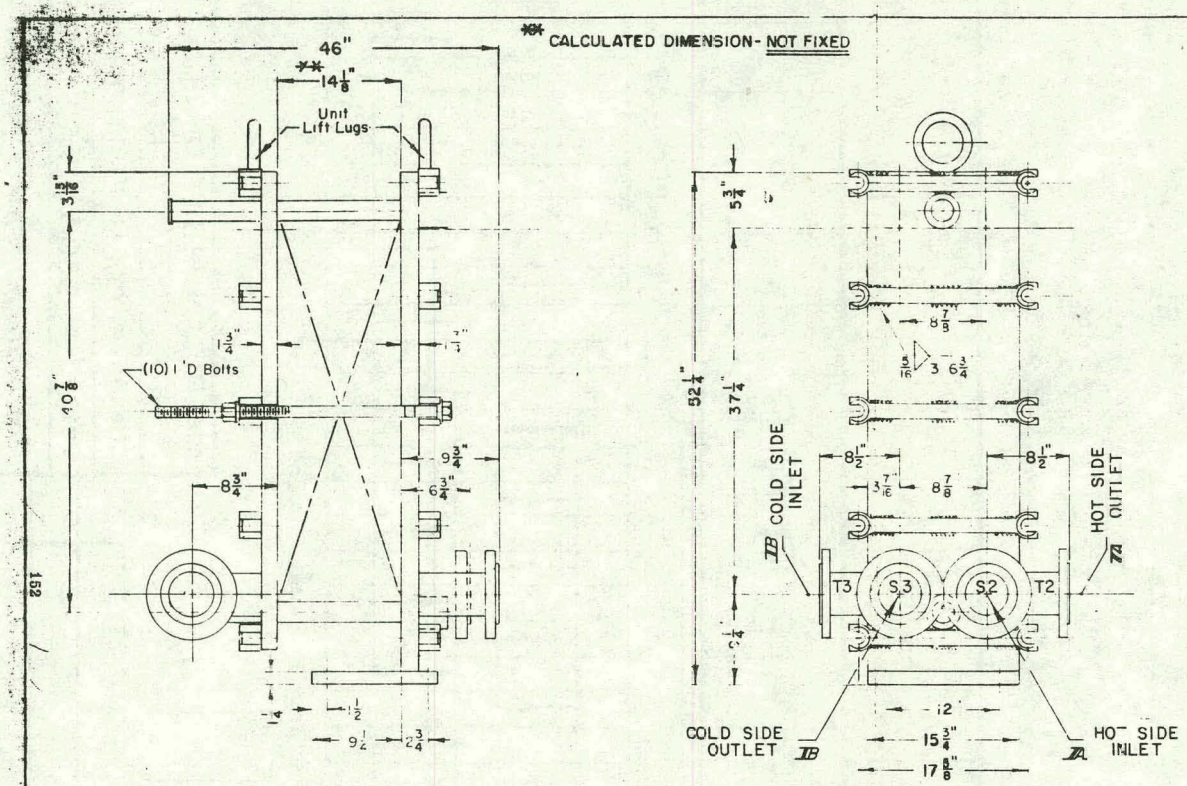

** CALCULATED DIMENSION- NOT FIXED

WEIGHT, Approx	1450 Lbs
DESIGN TEMP	280 °F
DESIGN PRESS	150 PSI
TEST PRESS	225 PSI
HEATING SURFACE	213.6 SQ FT
NUMBER OF PLATES	(Type 32 x 0.8 mm) — 62
PLATE MATERIAL	304 SS
* LENGTH OF CARRYING BARS —	TOP 41" / BOTTOM 38"
* LENGTH OF COVER BOLTS	39"

NOTE

ALL FLANGES SA-105, 150# ANSI
ALL COVERS SA-515 - 70 - THICKNESS BEFORE MACHINING
CARRYING BARS - STN STL
COVER BOLTS - SA-193 B8
NUTS, - TOBIN BRONZE
GASKETS - NITRIL (62 Field 128 Fo.: Gkts) (Field 5 Pori Gkts)
BOLT HOLES TO STRADDLE SHOWN CENTER LINES
ALL CBN STL PARTS SAND BLASTED AND PAINTED WITH G E NO 1272 METAL PRIMER, RED IRON OXIDE

DESIGNED, CONSTRUCTED AND N B STAMPED IN ACCORDANCE WITH A S M E CODE, SECTION VIII - 1977

NOZZLE SCHEDULE
ALL NOZZLES SA-403, 304L SCH. 10

MARK	NO REQ'D	SIZE	RATING	FACING	REMARKS
H					
G					
F					
E					
D					
C					
B	2	3"	150 #	L J.	VANSTONE
A	2	3"	150 #	L J.	VANSTONE

DESIGNED FOR 74 PLATES
UNIT PROVIDED WITH SPLASH PROTECTOR
DIMENSION TOLERANCE ± .125"

MOUNTING PAD DETAIL

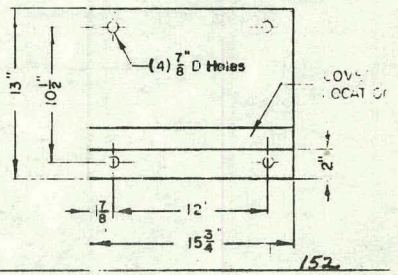

CERTIFIED PRINT FOR
COLM ENGINEERING
Approved For Fabrication Or Erection
By George Vaughan Date 3-16-78

Date	Sym	Revision	By
4-78	A	REVISED NOZZLE MAT'L & SIZE	D.B.

AMERICAN HEAT DIVISION ALFA-LAVAL
SOMERVILLE, N.J.

Customer COLM ENGINEERING
Order No 9303 — Item No 2
TYPE 32 SA PLATE HEAT EXCHANGER

Dwn By D.B. | Chk'd | App'd | Job No AP-7074
Date 3-15-78 | Mfg No BB-116 | Dwg No PHE-232

152

SOLAR DUMP SYSTEM CONTROL

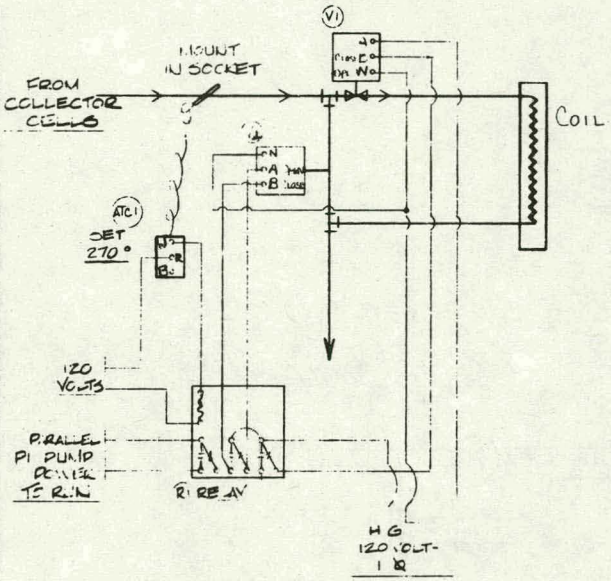

STORAGE TANK-EXCHANGER PUMP CONTROL

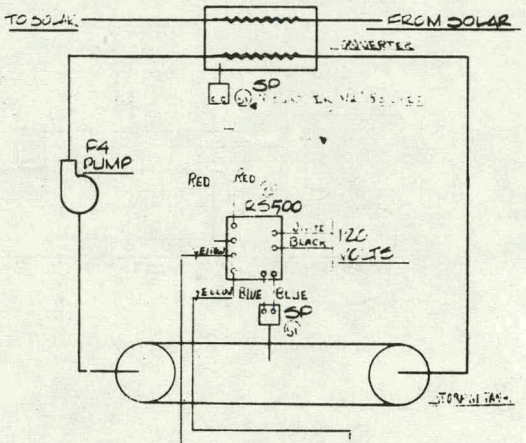

ATC 2 HIGHLIGHT PUMP CONTROL

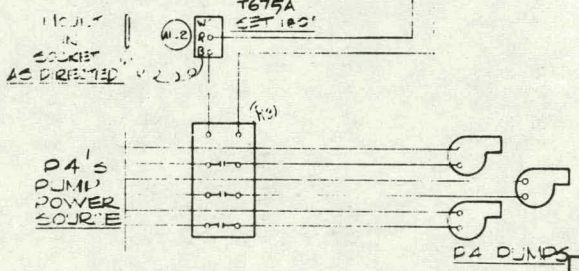

PRESSURE ALARM CONTROL

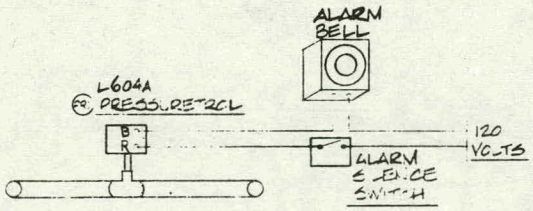

LIST OF MATERIAL

V1	1	VALVE	DUMP DIVERTING VALVE
ATC1	1	T675A	HIGH LIMIT CONTROL
ATC2	1	T675A	HIGH LIMIT CONTROL
R1	1	SPDT	RELAY (120 VOLT COIL)
PS1	1	L604A	PRESSURE SENSOR
RS	1	RS500	DIFFERENTIAL CONTROLLER
T1	2	SP	TANK AND EXCHANGER SENSORS
P4	1	RL21L	CONTACTOR.

SEQUENCE OF OPERATION

DUMP SYSTEM CONTROL

ATC 1 TEMPERATURE CONTROLLER WILL, WHEN IT SENSES HIGH TEMPERATURE, ENERGIZE R1 RELAY WHICH WILL ENERGIZE P1 PUMP, OPEN V1 VALVE AND CLOSE A VALVE TO DIRECT THE WATER THROUGH THE DUMP COIL. REVERSE ACTION WHEN THE WATER TEMPERATURE FALLS BELOW ATC 1S SETTING.

PRESSURE CONTROL

PS1 PRESSURE SENSOR, WILL, ENERGIZE THE ALARM BELL IF SYSTEM PRESSURE FALLS BELOW ITS SET POINT.

P4 PUMP LIMIT CONTROL

ATC2 HIGH LIMIT CONTROL WILL STOP P4 PUMP IF WATER TEMPERATURE REACHES 160°. WILL RE-ENERGIZE (THEN WHEN THE WATER TEMPERATURE FALLS BELOW 160° (ADJ.)

HOT WATER CONVERTER CONTROL

RS, DIFFERENTIAL CONTROLLER WILL ENERGIZE THE PUMP WHEN THE EXCHANGER IS CAPABLE OF HEATING THE STORAGE WATER AS SENSED BY THE T1 SENSORS.

[illegible] SYSTEM BY:
[illegible]
[illegible] BRIDGE ST.
CAMDEN, N.J.

CHERRY HILL INN

RT 30 AND HADDONFIELD RD. CHERRY HILL, N.J.

SCALE: NONE	APPROVED BY:	DRAWN BY: PT
DATE: 8-11-76		REVISED: [illegible]
ENGINEER: HOWARD COLM, CHERRY HILL, N.J.		
		DRAWING NUMBER: CS116-1 Cr 2

17222 PRINTED ON NO. 1000H CLEARPRINT

STORAGE TANK HIGH LIMIT CONTROL

TYPICAL OF 1

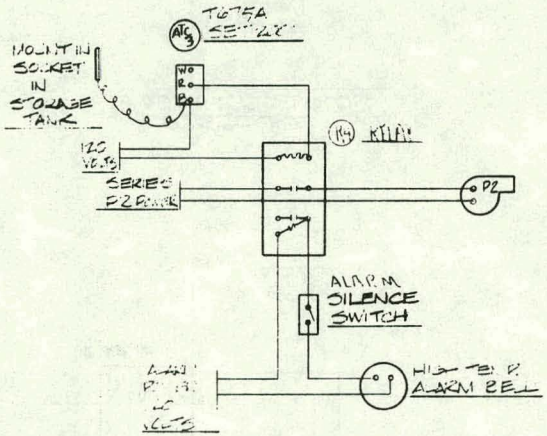

STORAGE TANK LOW LIMIT CONTROL

TYPICAL OF 1

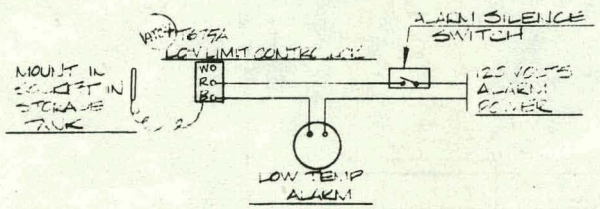

LIST OF MATERIAL

ATC 3	1	T675A	HIGH LIMIT CONTROLLOR
ATC 4	1	T675A	LOW LIMIT CONTROLLOR
R4	1	DPDT	RELAY

SEQUENCE OF OPERATION

STORAGE TANK HIGH LIMIT

ATC 3, TANK SENSOR WILL IF THE TANK TEMPERATURE EXCEEDS ITS SET POINT, STOP P2 PUMP AND ENERGIZE THE ALARM.

STORAGE TANK LOW LIMIT CONTROL

ATC 4, TANK SENSOR WILL, IF TANK TEMPERATURE FALLS BELOW ITS SET POINT, ENERGIZE THE ALARM.

HONEYWELL CONTROL SYSTEM BY:

CONTROL AND [illegible]
[illegible] FEDERAL ST.
CAMDEN, N.J.

[illegible]

CHERRY HILL INN
RT 30 AND HADDON-ELD RD. CHERRY [illegible]

SCALE: NONE	APPROVED BY:	DRAWN BY:
DATE: 3-1[illegible]-[illegible]		[illegible]
ENGINEER: HOWARD GRIM CHERRY HILL, N.J.		
		DRAWING NUMBER [illegible] of 2

17222 PRINTED ON NO. 1000H CLEARPRINT

TECHNICAL DATA
WELL-X-TROL
October, 1976

AMTROL INC.

There Is A WELL-X-TROL® For Pressurizing Any Size Water System

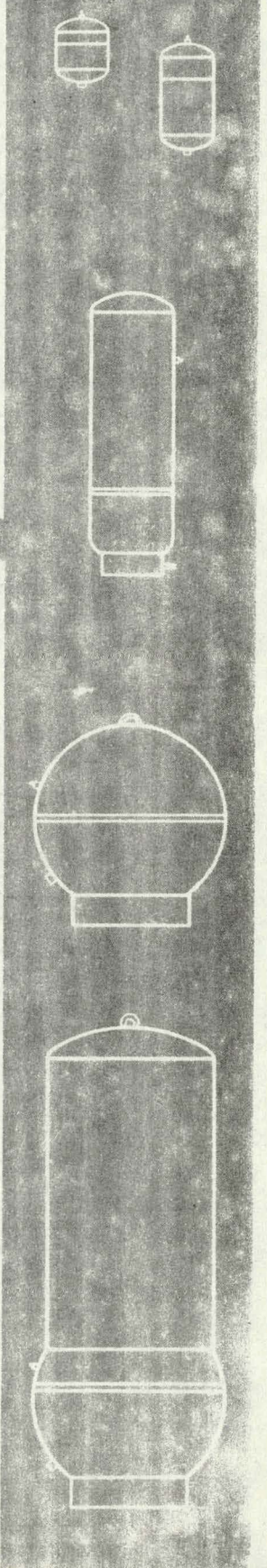

AVAILABLE IN 19 MODELS • WELL-X-TROLS ARE PRESSURIZED, HAVE SEALED-IN DIAPHRAGMS AND ARE USED WITH ANY TYPE PUMP

DESCRIPTION

Complete elimination of waterlogging is one of several outstanding features of the WELL-X-TROL system . . . most efficient means of pressurizing water systems.

It consists essentially of a prepressurized tank with a sealed-in diaphragm that prevents contact of the water with air in the WELL-X-TROL. The diaphragm, which is permanently sealed in, is a specially compounded material that imparts neither odor nor taste to the water. Since it merely flexes (does not stretch) it will last indefinitely.

Another exclusive feature is the custom molded polypropylene liner used in the WX-100 Series, WX-200 Series and WX-250 Series. Water in the WELL-X-TROL contacts only the sealed-in liner and diaphragm which form a completely corrosion-proof water reservoir.

NSF

The polypropylene liner has been tested and accepted by the National Sanitation Foundation.

With this type of system, air absorption problems are eliminated and pump cycling is greatly reduced. There is no need for air controls of any type. Additional significant features are:

- Cool, fresh water is always available, and separation of air and water prevents iron oxide discoloration.
- Available in 19 compact sizes, and most can be simply installed by one man. The WX-202 model, for example, weighs 40 lbs. yet is equivalent to a conventional 42-gal. storage tank.
- The same amount of water is obtained between pumping cycles as in a conventional tank 2½ times larger.
- All models can be installed at any convenient location in the piping system.
- Can be used with all types of pumps — shallow well, jet, piston, submersible, centrifugal or turbine.

THE BAASE COMPANY
5 WOODLAWN AVENUE
WILLOW GROVE, PA. 19090

U.S. Pat. No. 3,524,475

THE WELL-X-TROL PRINCIPLE (Model WX-101 shown)

How It Operates

An initial air charge is injected into each WELL-X-TROL at the factory. This original air charge, which is retained for the life of the system, is indicated on the pressure gauge.

The illustrations of a WX-101 (right) show how the WELL-X-TROL works, with an arbitrary pressure setting of 20-40 PSI. All models operate with this same principle.

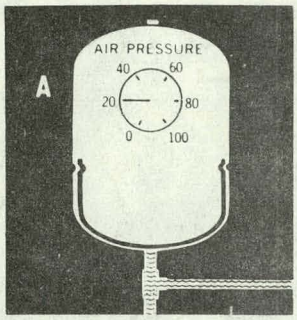

A. When the pump first starts to operate, no water will enter the WELL-X-TROL because of the charge pressure behind the diaphragm. When the pump develops a pressure in excess of 20 PSI, cool fresh water enters the WELL X-TROL.

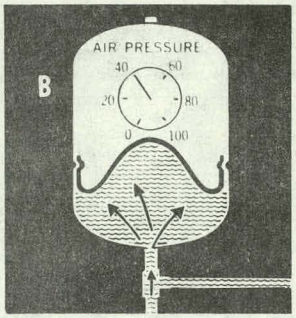

B. As the water enters the WELL-X-TROL, the diaphragm begins to invert and the air pressure in the tank increases. When the pressure reaches 40 PSI the pump stops. The water pressure in the WELL-X-TROL is then also 40 PSI.

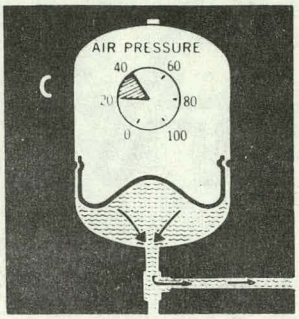

C. When tap water is drawn, the air pressure behind the diaphragm forces water from the WELL-X-TROL. When the air pressure in the tank again reaches 20 PSI, the pump starts replacing the water drawn from the tank.

DIMENSIONS AND WEIGHTS

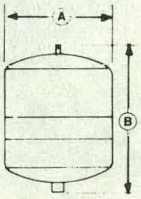

WX-101
WX-102
WX-102-IN
WX-103
WX-200
WX-200-UG

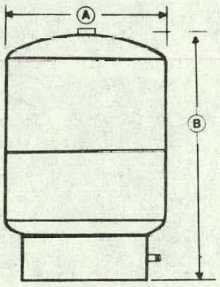

WX-201
WX-201-IN
WX-202
WX-202-IN
WX-203

Model No.	Dimensions (in.) Ⓐ	Dimensions (in.) Ⓑ	Factory Precharge Press. (PSI)	System Connection	Shipping Weight (Lbs.)
WX-101	8	12-5/8	20	3/4" NPTM	5
WX-102	11	15	20	3/4" NPTM	9
WX-102-IN	12-1/8	15-3/4	20	3/4" NPTM	10
WX-103	11	24-3/4	30	3/4" NPTM	15
WX-200 (In-Line)	15-3/8	22	30	1" Cplg.	25
WX-200-UG	15-1/2	22-1/8	30	1" Cplg.	28
WX-201	15-3/8	23-7/8	30	1" FPS Elbow	32
WX-201-IN	16-7/16	24-5/8	30	1" FPS Elbow	33
WX-202	15-3/8	31-5/8	30	1" FPS Elbow	40
WX-202-IN	16-7/16	32	30	1" FPS Elbow	41
WX-203	15-3/8	51-1/2	30	1" FPS Elbow	54
WX-250	22	35-5/8	30	1-1/4" NPTF	70
WX-251	22	46-3/4	30	1-1/4" NPTF	92
WX-252	22	62-1/8	30	1-1/4" NPTF	113
	Type	Dim. "A" (ins.)			
WX-301	1	47	Must	2-1/2" NPTF	585
WX-302	2	55-3/4	Be	2-1/2" NPTF	775
WX-303	2	67-1/2	Specified	2-1/2" NPTF	930
WX-304	2	82-1/2	By	2-1/2" NPTF	1065
WX-305	2	103-1/2	Customer	2-1/2" NPTF	1230

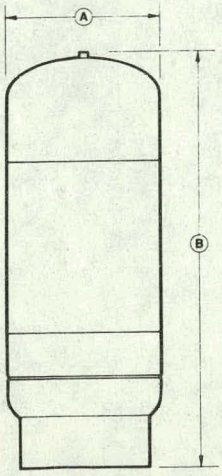

WX-250
WX-251
WX-252

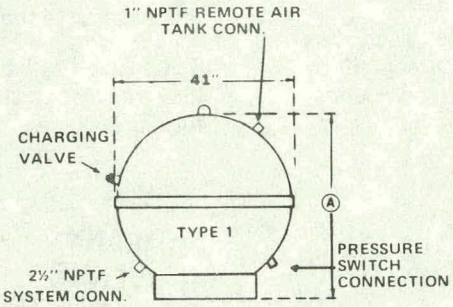

WX-301

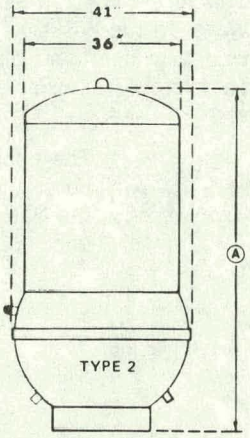

WX-302 **WX-304**
WX-303 **WX-305**

INSTALLATION

Compactness is a major feature of the WELL-X-TROL because it allows installation in out-of-the-way areas not large enough to accommodate conventional tanks. Smaller models will fit into such places as closets, under stairs or between floor joists, and may also be placed anywhere in the piping system, in any position, and can be mounted wherever is handiest — at the pump or on the wall, ceiling or floor. Models WX-101, WX-102, and WX-103 may be connected to any point in the system by simply using ¾" pipe nipples.

The stand-up models (WX-201 through WX-305) are simply placed in a convenient location and a single connection is made to the system.

The Model WX-200 is installed in the system in the same manner as the WX-101 through WX-103 but with a single 1" coupling. The Model WX-200-UG is also connected by a single 1" coupling but is designed to be installed underground.

To insure the integrity of the system, the pressure switch should be located as close to the WELL-X-TROL as possible.

All models can be used in multiples where greater capacity is required.

The diagrams below show some typical methods of installation.

MODELS WX-101
WX-102
WX-102-IN
WX-103
WX-200

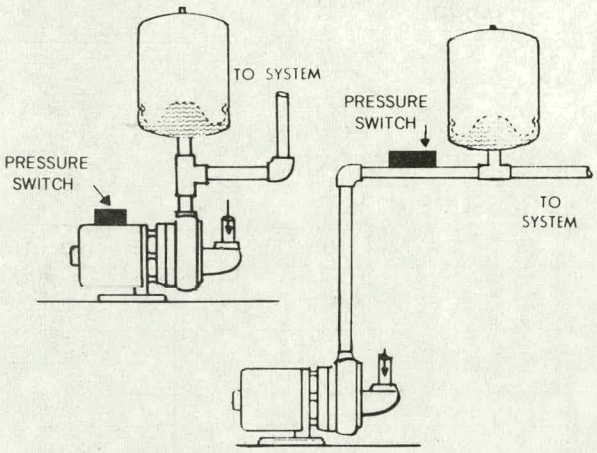

WX-200-UG

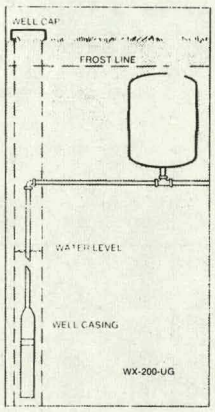

MODELS WX-201
WX-201-IN
WX-202
WX-202-IN
WX-203

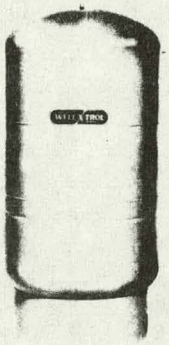

MODELS WX-250
WX-251
WX-252

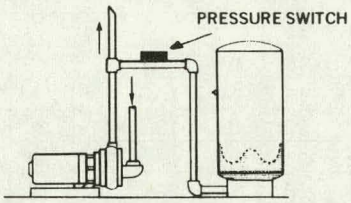

Single WELL-X-TROL Installation

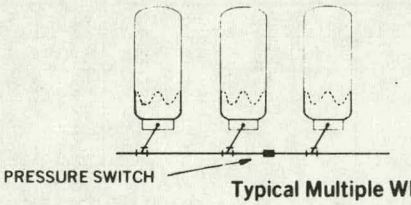

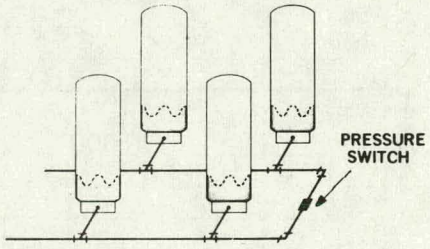

Typical Multiple WELL-X-TROL Installations

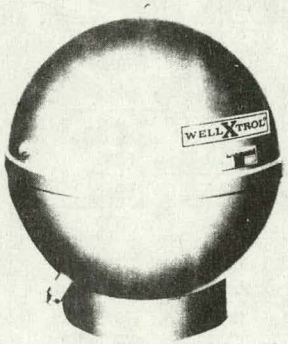

MODELS WX-301
WX-302
WX-303
WX-304
WX-305

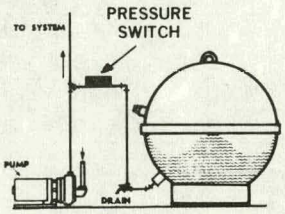

Single WELL-X-TROL Installation

A separate air tank can be used with the spherical shaped Model WX-301, if desired, and can be placed in any convenient location.

Multiple WELL-X-TROL Installation

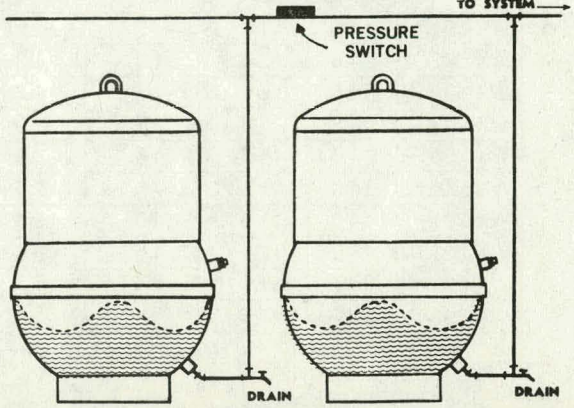

SIZES AND CAPACITIES

Although all WELL-X-TROL models are precharged, this initial air charge may easily be changed by means of the standard air charging valve. The charge of 20 PSI (Model Nos. WX-101 and 102) is correct for use with a pump cut-in setting of 20 PSI on the pressure switch. The charge of 30 PSI (Model Nos. WX-103 through WX-252) is correct for a cut-in setting of 30 PSI.

Generally, for most efficient operation the cut-out pressure should be no more than 25 PSI above the cut-in pressure.

Examples:

If the pump begins to operate at 25 PSI and stops operating at 45 PSI, your WELL-X-TROL must be precharged to 25 PSI.

If the pump begins to operate at 50 PSI and stops operating at 70 PSI, your WELL-X-TROL must be charged to 50 PSI.

Table A below shows the drawdown factors for various pressure conditions. To determine drawdown between pump cycles, multiply these factors by the WELL-X-TROL volumes shown in Table B. The drawdown should never exceed the amount shown in the column headed "Maximum". If it does, select the next size WELL-X-TROL.

IMPORTANT—Maximums should never be exceeded.

In order for the WELL-X-TROL to perform to its rated drawdown capacity, it is necessary to adjust the precharge pressure to equal the cut-in pressure of the pump.

TABLE "A" — DRAWDOWN FACTORS

PUMP CUT-OUT PRESSURE — PSIG	PUMP CUT-IN PRESSURE — PSIG																			
	20	25	30	35	40	45	50	55	60	65	70	75	80	85	90	95	100	105	110	115
30	.20																			
35	.26	17																		
40	.32	.23	.16																	
45	.37	.28	.21	.14																
50	.41	.33	.26	.20	.13															
55	.44	.37	.30	.24	.18	.12														
60	.47	.40	.35	.28	.22	.17	.11									FOR 300 SERIES ONLY				
65	.50	.43	.38	.32	.27	.21	.16	.11												
70	.52	.46	.41	.36	.30	.25	.20	.15	.10											
75		.49	.44	.38	.33	.28	.23	.19	.14	.10										
80			.46	.41	.36	.32	.27	.22	.18	.13	.09									
85				.44	.39	.34	.30	.25	.21	.17	.12	.08								
90					.41	.37	.33	.28	.24	.20	.16	.12	.08							
95						.39	.35	.31	.27	23	.19	.15	.12	.08						
100							.38	.33	.29	.26	.22	.18	.15	.11	.07					
105								.36	.32	.28	.25	.21	.18	.14	.10	.07				
110			FOR 300						.34	.31	.27	.24	.20	.17	.13	.10	.07			
115			SERIES ONLY							.33	.30	.26	.23	.20	.16	.13	.10	.06		
120											.32	.28	.25	.22	.19	.16	.12	.09	.06	
125												.30	.27	.24	.21	.18	.15	.11	.09	.05

TABLE "B" — WELL-X-TROL VOLUME/DRAWDOWN

Model No.	Volume (Gals.)	DRAWDOWN (GALS.)				Model No.	Volume (Gals.)	DRAWDOWN (GALS.)			
		Maximum	20-40 PSI Range	30-50 PSI Range	40-60 PSI Range			Maximum	20-40 PSI Range	30-50 PSI Range	40-60 PSI Range
WX-101	2.0	1.0	.7	.5	.4.	WX-203	36.0	11.5	11.5	9.4	7.9
WX-102	4.6	2.5	1.5	1.2	1.0	WX-250	44.4	36.0	14.0	11.5	9.8
WX-102-IN	4.6	2.5	1.5	1.2	1.0	WX-251	62.0	36.0	19.8	16.1	13.6
WX-103	8.5	3.2	2.7	2.2	1.9	WX-252	87.0	36.0	27.8	22.6	19.1
WX-200	14.0	11.5	4.5	3.6	3.1	WX-301	150.0	75.0	48.0	39.0	33.0
WX-200-UG	14.0	11.5	4.5	3.6	3.1	WX-302	200.0	100.0	64.0	52.0	44.0
WX-201	14.0	11.5	4.5	3.6	3.1	WX-303	250.0	125.0	80.0	65.0	55.0
WX-201-IN	14.0	11.5	4.5	3.6	3.1	WX-304	310.0	150.0	99.0	80.5	68.0
WX-202	20.0	11.5	6.4	5.2	4.4	WX-305	410.0	150.0	131.0	106.5	90.0
WX-202-IN	20.0	11.5	6.4	5.2	4.4						

F.G. PRINTED IN U.S.A.

TRANE AIR CONDITIONING

04-19-78

THE TRANE COMPANY, LA CROSSE, WISCONSIN 54601

SUBMITTAL DATA

PAGE NO.	TRANE ORDER NO.
1 OF 1	S D2-K431

TRANE JOB NUMBER	CUSTOMER ORDER NUMBER	NO. OF PRINTS	DATE TO SHIP	TYPE OF ORDER
D2-NOJOB	7124	10	04-19-78	SP

ARCHITECT

ENGINEER

TRANE SALESMAN

W.HANSEN

SOLD TO
GARDEN STATE RACING ASSOC.
P.O. BOX 406
CHERRY HILL., N.J. 08002

SHIP TO/PROJECT
GARDEN STATE RACING ASSOC
CHERRY HILL INN RT 38
HADDONFIELD RD
CHERRY HILL, N.J. 08002

MARK PACKAGES - PROJECT NAME

TAG:

ITEM	QUAN.	TRANE ORDERING NO.	SPECIFICATIONS
A	4		UHSA354S8ACAS.
			MOTOR 1-2 HP 208-60-3 1140 RPM
			PHILA HANSEN 4-19-78 PT

TRANE® AIR CONDITIONING

SPEC. SHEET ATTACHED	INSTALL./OPER./MAINT.	OPER./MAIN.	PARTS LIST	WIRING DIAGRAM
UH-S-2				

1-30.11-2 (9/

THE TRANE COMPANY - LA CROSSE, WISCONSIN 54601

TRANE®

SUBMITTAL

FILE:
TRANE HEATING PRODUCTS
UNIT HEATERS
Steam - Hot Water
Submittal

UH-S-2

MARCH, 1976

THE TRANE COMPANY — LA CROSSE, WISCONSIN 54601

COMMERCIAL AIR CONDITIONING DIVISION

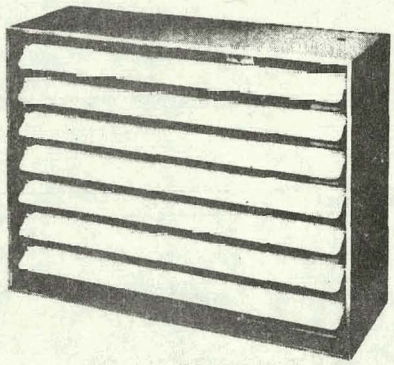

MODEL S PROPELLER TYPE HORIZONTAL UNIT HEATERS

MODEL 18-S THRU 354-S

MECHANICAL SPECIFICATIONS

CASING - Two piece with "picture frame" front formed into wrap-around sides, top and bottom. Horizontal louvers with louver keepers standard. Eighteen gauge back panel with deep-draw fan orifice for rigidity. Cast brass coil supply and return pipe tap connectors bolted to back panel. Casing phosphatized to prevent corrosion and painted with green baked enamel.

FAN - Trane designed and built Model "A" fan with aluminum blades, dynamically balanced in factory. For standard or sparkproof applications.

COILS - Hot water - steam coils are single tube single serpentine on all sizes except 230 thru 354 which have two circuits. Sigma Flo aluminum fins bonded to .031" seamless copper tubing. All coils one-row deep in air flow direction. Coils tested at 300 psig air pressure under water. Optional, heavy .049 red brass tubing suitable for 200 psig steam or 390 F water at 200 psig. Cupro-nickel tubing (.031") suitable for 450 F water at 400 psig. Steel tubing (.049") suitable for 450 F water at 600 psig. Optional coils with turbulators available for high performance on hot water. Odd model number units (19, 77, 273 etc.) have modified coils which provide air bypass.

MOTORS - Totally enclosed 115/60/1 Class "B" insulated, shaded pole and permanent split capacitor motors are standard. Sleeve bearing motors (which can be oiled) for 1/25 thru 1/8 H.P. Ball bearing motors (permanently lubricated) for 1/6 thru 1/2 H.P. Single phase motors with built in overload protection. Standard 115/60/1 motors for unit sizes 18S thru 100S can be operated at multiple speeds with the addition of solid state control. Explosion proof and 3-phase motors available for all unit sizes.

LOUVER FIN DIFFUSER (OPTIONAL) - Used with standard louvers for lateral diffusion. Provides four direction control. Ships separately and clips onto horizontal louvers.

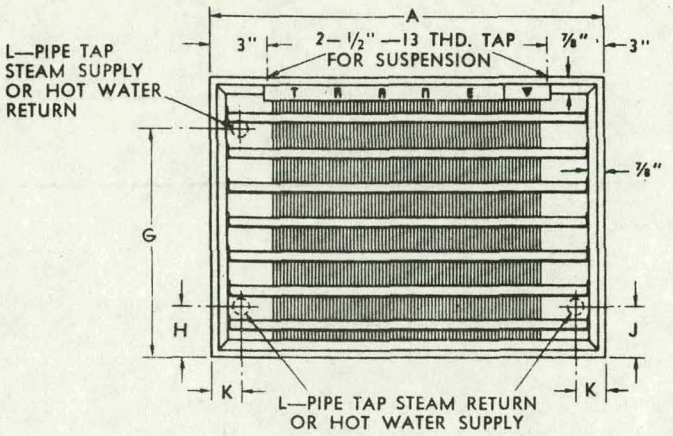

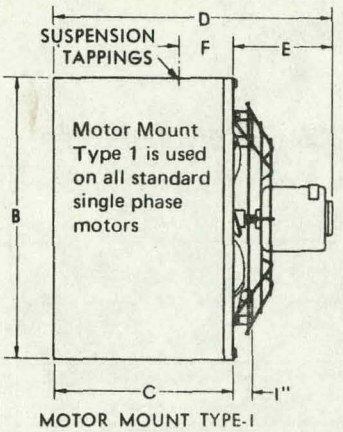

MOTOR MOUNT TYPE-1

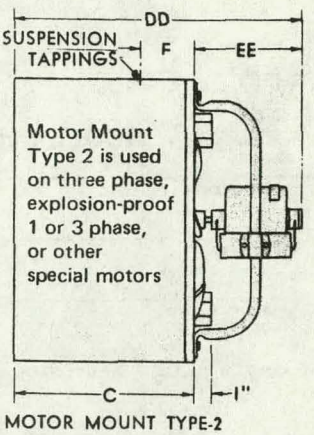

MOTOR MOUNT TYPE-2

TABLE 1—Roughing-In Dimensions For Model S Unit Heaters

Model	Fan Dia.	A	B	C	D	DD	E	EE	F	G	H	J	K	L
18, 19 & 20S	11-1/4	20-7/8	14-1/4	9-3/8	15-3/8	20-5/8	6	11-1/4	3-1/8	8-5/8	2-5/8	-	1-3/4	1
31S	11-1/4	20-7/8	14-1/4	9-3/8	16-1/8	20-5/8	6-3/4	11-1/4	3-1/8	8-5/8	-	2-5/8	1-3/4	1
38 & 42S	11-1/4	20-7/8	14-1/4	9-3/8	16-1/8	20-5/8	6-3/4	11-1/4	3-1/8	11-5/8	2-5/8	-	1-3/4	1
45S	13-1/2	23-7/8	17-1/4	10	17	21-1/4	7	11-1/4	3-1/2	11-5/8	2-5/8	-	2	1-1/4
60S	13-1/2	23-7/8	17-1/4	10	17	21-1/4	7	11-1/4	3-1/2	14-5/8	-	2-5/8	2	1-1/4
53S	13-1/2	23-7/8	17-1/4	10	17-1/4	21-1/4	7-1/4	11-1/4	3-1/2	11-5/8	2-5/8	-	2	1-1/4
70S	13-1/2	23-7/8	17-1/4	10	17-1/4	21-1/4	7-1/4	11-1/4	3-1/2	14-5/8	-	2-5/8	2	1-1/4
69S	13-1/2	26-3/4	20-1/4	11-1/4	18-1/2	22-1/2	7-1/4	11-1/4	4-1/8	14-5/8	-	2-5/8	2	1-1/4
90S	13-1/2	26-3/4	20-1/4	11-1/4	18-1/2	22-1/2	7-1/4	11-1/4	4-1/8	17-5/8	2-5/8	-	2	1-1/4
77S	16-3/4	26-3/4	20-1/4	11-1/4	18-3/4	22-1/2	7-1/2	11-1/4	4-1/8	14-5/8	-	2-5/8	2	1-1/4
100S	16-3/4	26-3/4	20-1/4	11-1/4	18-3/4	22-1/2	7-1/2	11-1/4	4-1/8	17-5/8	2-5/8	-	2	1-1/4
91S	16-3/4	31-1/8	23-1/4	11-1/4	21	22-1/2	9-3/4	11-1/4	4-1/8	14-5/8	-	2-5/8	2-1/2	1-1/2
126S	16-3/4	31-1/8	23-1/4	11-1/4	21	22-1/2	9-3/4	11-1/4	4-1/8	20-5/8	-	2-5/8	2-1/2	1-1/2
168S	19-3/4	33-3/4	26-1/4	12-3/8	22-1/8	23-5/8	9-3/4	11-1/4	4-5/8	23-5/8	2-5/8	-	2-1/2	1-1/2
186S	19-3/4	33-3/4	26-1/4	12-3/8	22-1/8	24-5/8	9-3/4	12-1/4	4-5/8	23-5/8	2-5/8	-	2-1/2	1-1/2
127S	19-3/4	33-3/4	26-1/4	12-3/8	22-1/8	23-5/8	9-3/4	11-1/4	4-5/8	17-5/8	2-5/8	-	2-1/2	1-1/2
137S	19-3/4	33-3/4	26-1/4	12-3/8	22-1/8	24-5/8	9-3/4	12-1/4	4-5/8	17-5/8	2-5/8	-	2-1/2	1-1/2
181S	19-3/4	39-3/8	32-1/4	13-1/4	23	25-1/2	9-3/4	12-1/4	5-1/8	23-5/8	2-5/8	-	2-1/2	1-1/2
230S	19-3/4	39-3/8	32-1/4	13-1/4	23	25-1/2	9-3/4	12-1/4	5-1/8	22-1/8	-	2-5/8	2-1/2	1-1/2
207S	25-1/4	39-3/8	32-1/4	13-1/4	24-1/2	26	11-1/4	12-3/4	5-1/8	23-5/8	2-5/8	-	2-1/2	1-1/2
260S	25-1/4	39-3/8	32-1/4	13-1/4	24-1/2	26	11-1/4	12-3/4	5-1/8	22-1/8	-	2-5/8	2-1/2	1-1/2
320 & 354S	25-1/4	52-1/8	32-1/4	13-3/4	25	26-1/2	11-1/4	12-3/4	5-3/8	22-1/8	-	2-5/8	2-1/2	1-1/2
243 & 273S	25-1/4	52-1/8	32-1/4	13-3/4	25	26-1/2	11-1/4	12-3/4	5-3/8	23-5/8	2-5/8	-	2-1/2	1-1/2

TABLE 2—Capacities, High Capacity, High Outlet Temperature Hot Water Units
Conditions: 200° entering water, 60° entering air, 20° water temperature drop.

SIZE	BTU	CFM	FINAL TEMP.	MOT. RPM	MOT. HP
20-W2	10,500	315	90.7	1050	1/25
38-W2	27,200	514	108.8	1550	1/20
42-W2	27,600	530	108.1	1550	1/20
60-W2	43,100	755	112.6	1550	1/20
70-W2	49,500	1004	105.4	1550	1/8
90-W2	66,200	1162	112.5	1550	1/8
100-W2	73,000	1427	107.2	1550	1/8
126-W2	97,100	1661	113.9	1100	1/6
168-W2	129,800	2267	112.8	1100	1/6
186-W2	140,500	2690	108.1	1100	1/4
230-W2	187,500	3200	114.0	1100	1/4
260-W2	207,400	3933	108.6	1100	1/2
320-W2	266,200	4350	116.4	1100	1/2
354-W2	298,100	5528	109.7	1100	1/2

TABLE 3—Steam and Hot Water Capacities, Standard Units
Conditions: 2 Lbs. Steam, 60° entering air, CFM for standard air at 70 F 200° entering water, 60° entering air, 20° temperature drop.

SIZE	STEAM			HOT WATER			MOT. RPM	MOT. HP
	BTU	CFM	FINAL TEMP.	BTU	GPM	FINAL TEMP.		
18-S	17,400	280	117	3,500	.36	72.0	1050	1/25
20-S2	20,000	318	118	6,400	.66	79.0	1050	1/25
38-S	38,700	544	126	19,100	1.97	92.4	1550	1/20
42-S	41,600	590	125	20,000	2.06	91.2	1550	1/20
60-S	60,500	815	129	34,600	3.56	99.1	1550	1/20
70-S	68,200	1100	117	40,400	4.17	93.9	1550	1/8
90-S	87,600	1214	127	55,700	5.74	102.3	1550	1/8
100-S	96,000	1535	118	62,500	6.44	97.5	1550	1/8
126-S	125,700	1760	126	84,900	8.74	104.4	1100	1/6
168-S	172,000	2380	127	115,300	11.88	104.6	1100	1/6
186-S	185,200	2808	121	125,400	12.92	101.2	1100	1/4
230-S	229,700	3300	124	161,200	16.67	105.2	1100	1/4
260-S	256,300	4100	118	181,100	18.67	100.7	1100	1/2
320-S	324,000	4480	127	234,300	24.15	108.2	1100	1/2
354-S	355,500	5660	118	264,900	27.30	103.1	1100	1/2

SHEET ____ OF ____ SALES ORDER NO. _____

TRANE MODEL S HORIZONTAL UNIT HEATER SUBMITTAL DATA

ARCHITECT

ENGINEER

PROJECT AND LOCATION

ORDER DATE | CUSTOMER ORDER NO. | CUSTOMER ACCOUNT NO.

SOLD TO

(INCLUDE ZIP CODE)

APPROVAL STAMP

ITEM	QUAN.	TAG NO.	UNIT SIZE	MOTOR			CFM 70 F	#STEAM ____ °ENT. WATER ____ °ENT. AIR			
				HP	RPM	CURRENT		MBH	FINAL AIR TEMP.	GPM	REMARKS

TABLE 4—Steam and Hot Water Capacities, Low Outlet Temperature (By-Pass) Units.

SIZE	STEAM			HOT WATER				
	BTU	CFM	FINAL TEMP.	BTU	GPM	FINAL TEMP.	HOT. RPM	HOT. HP
19-S2	19,300	390	106				1050	1/25
31-S	30,400	635	104	9,800	1.01	74.2	1550	1/20
45-S	45,800	897	107	25,000	2.58	85.7	1550	1/20
53-S	53,300	1090	105	28,900	2.98	84.4	1550	1/8
69-S	69,400	1335	108	41,800	4.31	88.8	1550	1/8
77-S	76,600	1510	107	47,000	4.84	88.7	1550	1/8
91-S	91,000	1740	108	60,600	6.25	92.1	1100	1/6
127-S	125,800	2440	108	79,900	8.23	90.2	1100	1/6
137-S	135,800	2700	107	88,100	9.08	90.1	1100	1/4
181-S	180,700	3392	109	134,300	13.84	96.5	1100	1/4
207-S	206,900	4060	107	153,100	15.77	94.8	1100	1/2
243-S	238,700	4607	108	179,300	18.48	95.9	1100	1/2
273-S	272,200	5644	105	207,800	21.41	93.9	1100	1/2

PRINTED BY PRODUCTION SERVICES - LA CROSSE K.L.C.

Pages 163 thru 171 have been deleted due to copyrighted information. Contact Bell & Gossett Compnay, 8200 N. Austin Avenue, Morton Grove, Illinois 60053, for information on Thermoflo indicators and the installation and operating instructions.

SOLAR CONTROLS APPLICATIONS MANUAL

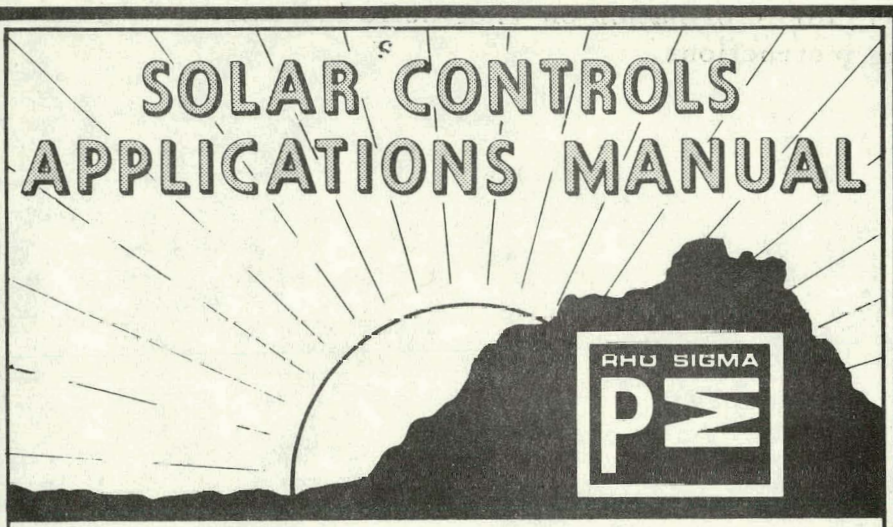

APPLICATION	MODEL	PAGE
DIFFERENTIAL PUMP/F', CONTROL (SPACE HEATING)	RS106	1
PROPORTIONAL PUMP CONTROL (DOMESTIC WATER HEATING)	RS500-1 Series	2
PROPORTIONAL CONTROL w/DUAL OUTPUTS (DOMESTIC WATER HEATING)	RS500-2 Series	3
INTEGRATED SOLAR/CONVENTIONAL HEATING SYSTEM CONTROL	RS360	4
AUTOMATIC VALVE CONTROL (POOL AND SPA HEATING)	RS260	5
DIFFERNTIAL PUMP CONTROL (POOL AND SPA HEATING)	RS280	6
SENSORS		7

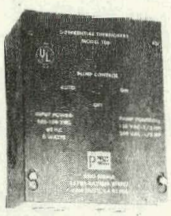

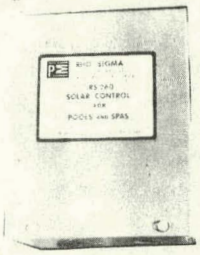

RHO SIGMA INCORPORATED

11922 VALERIO STREET, N. HOLLYWOOD, CA 91605. (213) 982-6800

PΣ	DIFFERENTIAL FAN/PUMP CONTROL FOR SPACE HEATING SYSTEM	RS 104 RS 106

The space heating application, using the RS106, provides fan or pump control based on the temperature difference between the solar collector and the rock or water storage. The RS106 has an adequate dead-band between the turn-on and turn-off temperature differentials to prevent cycling of the circulating fan or pump. This dead-band eliminates the need for time-delays.

SPECIFICATIONS RS106:

Input: 120 VAC
Standard Output:
SPDT Relay rated at 10 ams.
1/3 hp at 120 VAC
1/2 hp at 240 VAC
Relay contacts make when ΔT **on =**
T(collector) − T (storage) $>20°$ $\pm 3°F$
Relay contacts break when T off =
T(collector) − T (storage) $<3°$ $\pm 1°F$

Housed in standard NEMA box to assure compatibility with standard electrical trade hardware.

The RS106 has adequate room in the bottom, high-voltage compartment for mounting a contactor to control horse-power rated fans and pumps.

Optional Outputs:
2PDT relay, 10 amp per contact.
3PDT relay, 10 amp per contact.

RS104

The RS104 in addition to operating the collector pump has an additional output control relay circuit. This circuit (relay B) is activated when the collector approaches freezing and can control drain-down valves in an anti-freeze mode. The RS104 relay B circuit may also be used to switch from solar storage to auxiliary back-up when the solar energy is depleted. For this mode of operation relay B is set to activate at a preset temperature (customer-supplied) in the order of 100°F. The version of the control is identified as the RS-104SK.

Relay B contacts made when:
T_{on} = T(collector) = 37° ±1°F
Relay B contacts break when:
T_{off} = T(collector) = 41° ±1°F

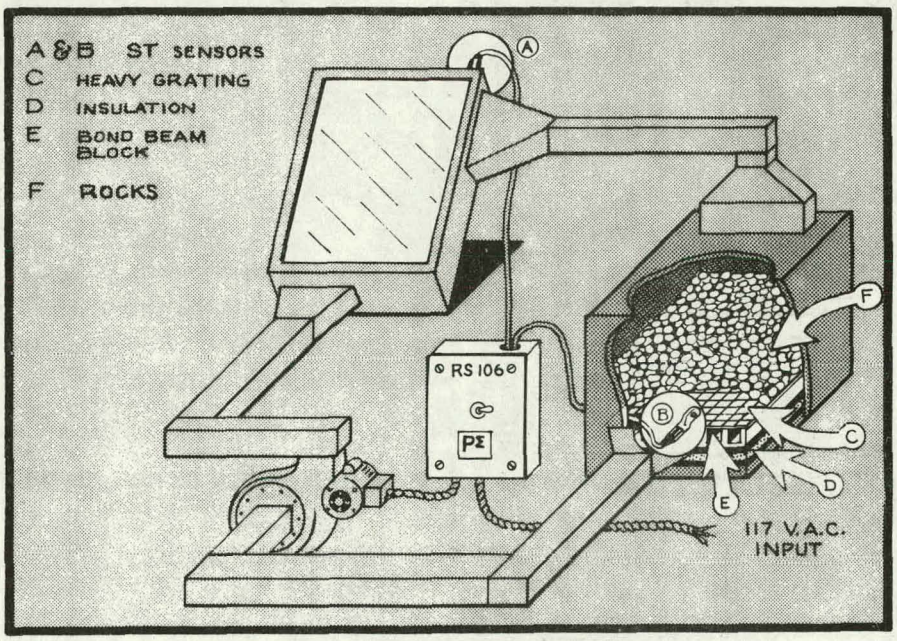

RHO SIGMA

DIFFERENTIAL THERMOSTAT INSTALLATION DRAWING

RS 500-1 SINGLE OUTPUT (Rev. A)

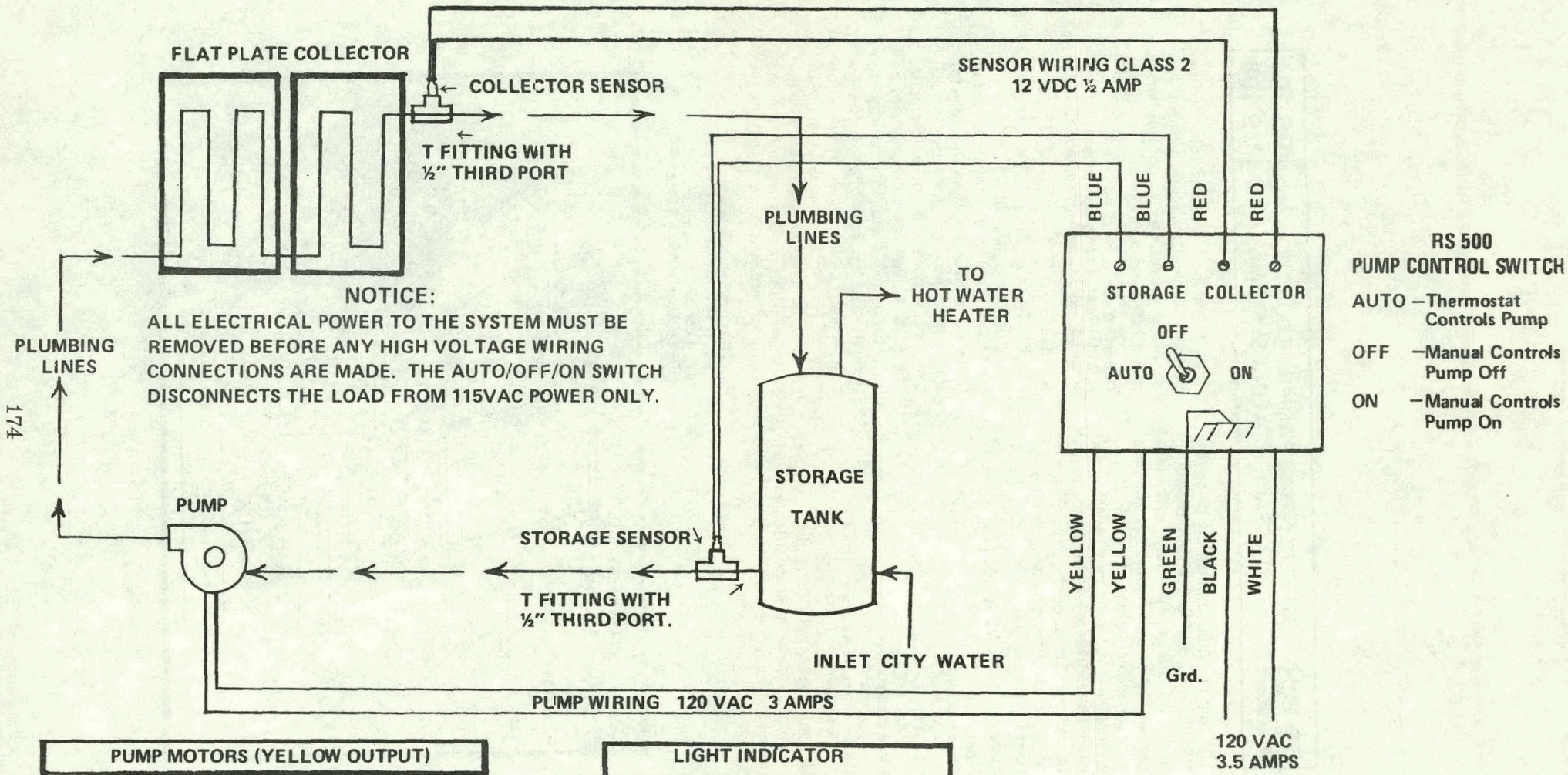

NOTICE:
ALL ELECTRICAL POWER TO THE SYSTEM MUST BE REMOVED BEFORE ANY HIGH VOLTAGE WIRING CONNECTIONS ARE MADE. THE AUTO/OFF/ON SWITCH DISCONNECTS THE LOAD FROM 115VAC POWER ONLY.

PUMP MOTORS (YELLOW OUTPUT)		
500 P PROPORTIONAL	1/10 HP	SHADED POLE OR PERMANENT CAPACITOR
500S ON / OFF	1/10 HP	ANY

LIGHT INDICATOR	
PUMP	LIGHT
OFF	OFF
PROPORTIONAL SPEED	PULSING ON
ON	ON

WARNING:
ALL FIELD WIRING MUST BE RATED AT 90°C MIN.

50 1 REV. A

RHO SIGMA INCORPORATED

TEMPERATURE vs. RESISTANCE SPECIFICATIONS

RHO SIGMA SENSORS

°F	°C	RESIST. EQIV.	°F	°C	RESIST. EQIV.	°F	°C	RESIST. EQIV.
32	0.0	32654.	106	41.1	5093.	180	82.2	1170.
34	1.1	30859.	108	42.2	4873.	182	83.3	1129.
36	2.2	29174.	110	43.3	4663.	184	84.4	1090.
38	3.3	27592.	112	44.4	4464.	186	85.6	1053.
40	4.4	26105.	114	45.6	4274.	188	86.7	1017.
42	5.6	24709.	116	46.7	4093.	190	87.8	982.
44	6.7	23395.	118	47.8	3921.	192	88.9	949.
46	7.8	22160.	120	48.9	3758.	194	90.0	917.
48	8.9	20998.	122	50.0	3602	196	91.1	886.
50	10.0	19903.	124	51.1	3453.	198	92.2	857.
52	11.1	18873.	126	52.2	3312.	200	93.3	828.
54	12.2	17903.	128	53.3	3177.	202	94.4	801.
56	13.3	16988.	130	54.4	3048.	204	95.6	775.
58	14.4	16126.	132	55.6	2925.	206	96.7	749.
60	15.6	15313.	134	56.7	2808.	208	97.8	725.
62	16.7	14546.	136	57.8	2697.	210	98.9	702.
64	17.8	13822.	138	58.9	2590.	212	100.0	679.
66	18.9	13139.	140	60.0	2488.	214	101.1	658.
68	20.0	12493.	142	61.1	2391.	216	102.2	637.
70	21.1	11883	144	62.2	2298.	218	103.3	617.
72	22.2	11307.	146	63.3	2209.	220	104.4	597.
74	23.3	10762.	148	64.4	2124.	222	105.6	579.
76	24.4	10247.	150	65.6	2043.	224	106.7	561.
78	25.6	9760.	152	66.7	1966.	226	107.8	543.
80	26.7	9298.	154	67.8	1891.	228	108.9	527.
82	27.8	8862.	156	68.9	1820	230	110.0	511.
84	28.9	8448.	158	70.0	1753.	232	111.1	495.
86	30.0	8056.	160	71.1	1688.	234	112.2	480.
88	31.1	7685.	162	72.2	1625.	236	113.3	466.
90	32.2	7333.	164	73.3	1566.	238	114.4	452.
92	33.3	6999.	166	74.4	1509.	240	115.6	438.
94	34.4	6683.	168	75.6	1454.	242	116.7	425.
96	35.6	6382.	170	76.7	1402.	244	117.8	413.
98	36.7	6097.	172	77.8	1351.	246	118.9	401.
100	37.8	5827.	174	78.9	1303.	248	120.0	389.
102	38.9	5570.	176	80.0	1257.	250	121.1	378.
104	40.0	5326.	178	81.1	1213.			

Accuracy of sensors is ±.4°C over range of 0°–70°C. Maximum operating temperature is 220°C (428°F). Sensors having tighter tolerances are available.

11922 VALERIO STREET • NO. HOLLYWOOD, CA. 91605 • (213) 982-6800

RS 500 SINGLE OUTPUT	PROPORTIONAL PUMP CONTROL FOR DOMESTIC WATER HEATING	PΣ

The domestic water heating application of the RS500 provides **proportional** pump motor speed control based on the temperature difference between the solar collectors and the storage tank. This proportional pump control increases solar energy collection efficiency by 6-8% during winter, cloudy days and other periods of marginal solar intensity when maximum efficiency is important. The RS500 is designed to control **permanent-capacitor** and **shaded-pole** motors. The control sesnes very small temperature differentials and modulates the pump speed in response to the small changes in the temperature differential between the collectors and the storage.

Power delivered to the pump by the all-solid state circuitry is switched on and off at zero crossover, thus eliminating bothersome line noise. The power delivered to the pump reaches full line voltage on each cycle, thus assuring full torque even at low speeds.

Proportional controls should be used in systems where the pump is required to overcome **only line friction.** Proportional controls are not recommended for use in drain-back systems in which the solar collectors drain when the pump shuts off. In such systems, the pump may not receive enough power in the proportional mode to overcome the high initial static head.

Standard features:

a) pulsing indicator light indicates pump speed.

b) switch **meets local electrical code** requirements for pump power disconnect switch when control is located within 6 feet of pump.

c) eliminates the need for balance valves and circuit setters.

SPECIFICATIONS RS500-1 SERIES:;

Input: 110 VAC, 50-60 Hz
Output: 110VAC, 1/12 hp
Optional configurations available for 220 VAC, 50-60 Hz.

RS500-1P

Minimum Flow: $\Delta T = 3° \pm 1°F$
Full Flow: $\Delta T = 12° \pm 1°F$

RS500-1PH

Same proportional flow control characteristis of RS500-1P **with additional high temperature detection circuit** to shut-off pump when storage tank approaches excessive temperatures. Standard shut-off temperature is 140°F. Other shut-off temperatures may be specified. When specifying other turn-off temperatures, consideration should be given to temperature stratification between the bottom of the tank where sensor is installed and top of tank where delivered water is located.

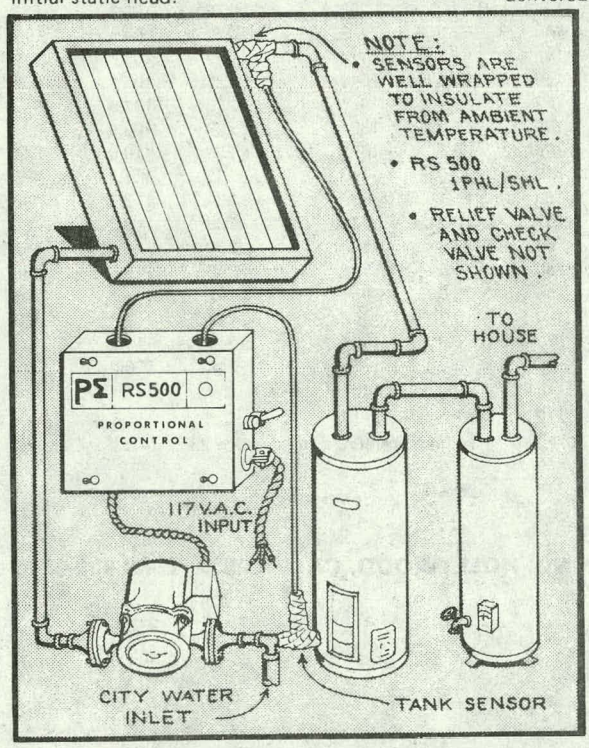

RS500-1PHL

Same characteristics as RS500 1PH **with addition of anti freeze circuit** to turn pump full on when collector approaches freezing. Anti-freeze circuit overrides all other control commands and turns pump full on at 37°F until collector temperature reaches 44°F. All Rho Sigma controls operate high temperature cut-off and low temperature start functions from the primary collector and storage sensor. Thus no extra sensors are required, greatly reducing installation time and cost.

The following are some of the permanent capacitor and shaded--pole pumps which have been tested and found to perform well with the RS500: Taco 007, All Grundfos models, March 821BR and 809, Teel 1P761 and 1P760, Sunstrand LA4302.

PE	PROPORTIONAL CONTROL w/DUAL OUTPUTS DOMESTIC WATER HEATING	RS500 DUAL OUTPUTS

This application of the RS500 provides proportional pump control identical to that provided by the RS500-1 series.

Additional control capability to operate solenoid valves to drain the collector array is provided by the second output. With normally closed valves at points B and C and a normally open valve at point A, the second output of the RS500-1PHL-2L can break power to the drain valves on approach of low temperature conditions. When the control removes power from B and C, they close, preventing city water from reaching the collector. Simultaneously, valve A opens and drains the system. This drain-down action also takes place in the case of primary power failure to the sytem, e.g., ice storm.

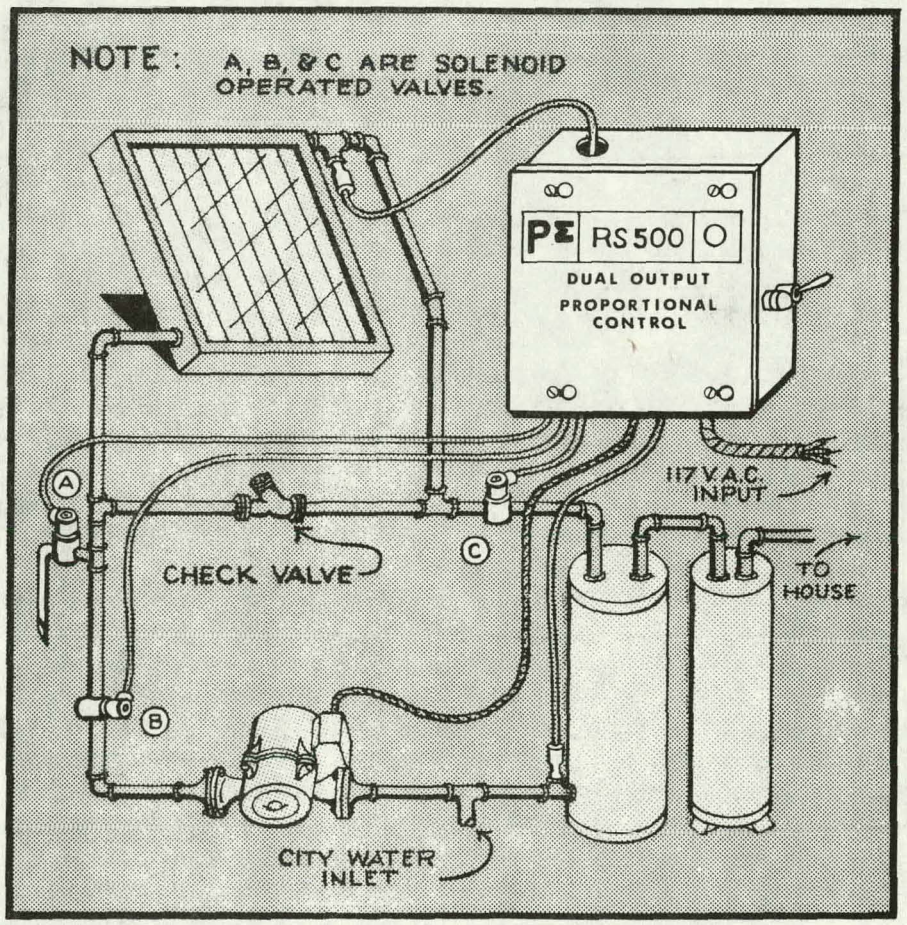

RS 360	INTEGRATED SOLAR/CONVENTIONAL HEATING SYSTEM CONTROL	PΣ

The application of the RS360 to conventional and solar heating systems provides integrated control of the solar heating system and the conventional heating system. The RS360 provides the following control functions:

1) Pump J activated when solar collectors are hotter than large storage tank;
2) Pump K activated when large storage tank is hotter than domestic water tank;
3) Pump L activated when room thermostat calls for heat and storage tank is hot enough to heat the living space; and
4) Furnace activated when room thermostat calls for heat and storage tank is too cold to heat the living space.

Pumps J and K are switched on at 20°F differentials and are switched off on 3°F differentials. The call for heat from the room thermostat is switched to the storage tank when its temperature is above 100°F. The call for heat is switched to the furnace when the solar storage tank drops below 105°F.

All contacts in the RS360 are SPDT and are rated at 10 amps.

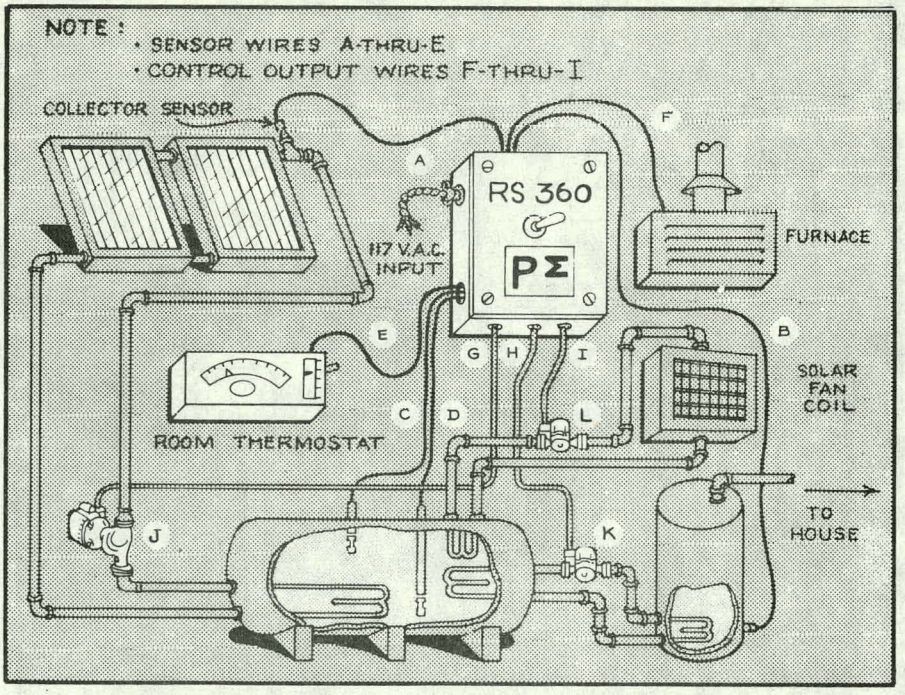

PΣ	AUTOMATIC VALVE CONTROL FOR POOL AND SPA SOLAR HEATING	RS 260

The pool heating application of the RS260 provides automatic solar system control based on the temperature difference between the solar collectors and the pool water. The RS260 provides the additional control capability of shutting off the solar heater when the pool water reaches a temperature threshold which is customer-adjustable over the range of 55°–115°F. The control is designed to regulate normally open or normally closed valves located as shown. **The RS260 can also simultaneously control a second valve** (either NO or NC) located in the supply line or the return line of the collector array.

Relatively lower temperature differences between collector and pool water, resulting from use of unglazed or plastic collectors and relatively high flow rates, makes the selection and location of sensors more important in pool applications than in domestic water applications. The **SF sensor** is designed to simulate the important features of plastic or unglazed metal collectors under varying solar and wind conditions. The **SP sensor** is recommended for sensing the pool water temperature.

The RS260 is housed in a raintight NEMA enclosure designed for outdoors mounting. It is designed for easy retrofit wiring to the load side of the existing pump timer.

SPECIFICATIONS RS260:

Input: 110 VAC or 220 VAC (Specify as required)

Output to valves: 24 VAC, 30VA, SPDT

Range of Customer-adjustable thermostatic control: 55°F–115°F

Control points: △ Ton – 7°F; △ Toff = 3°F

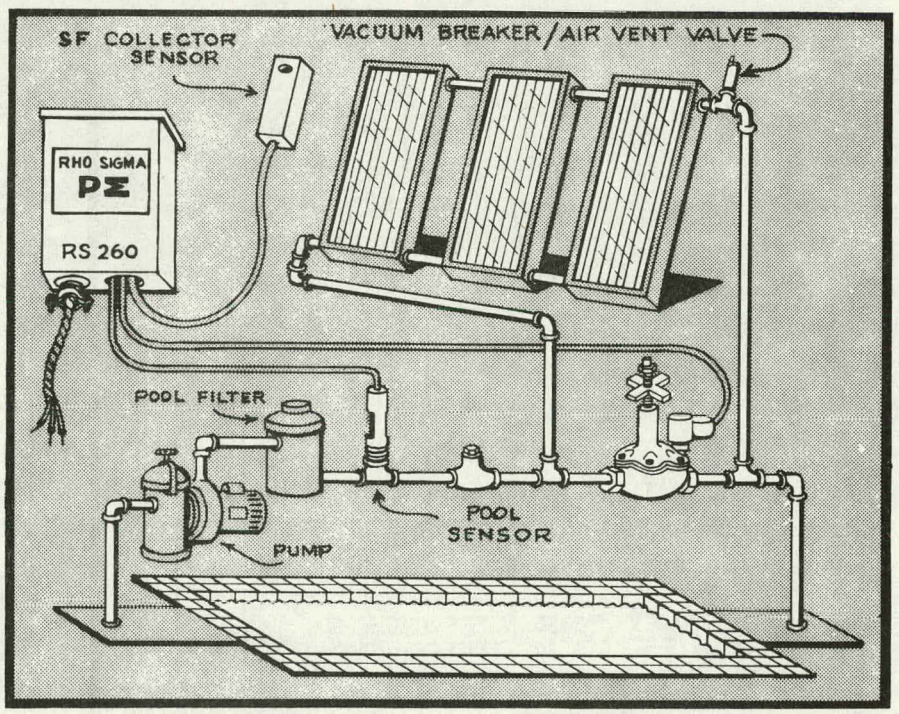

RS 280	DIFFERENTIAL PUMP CONTROL FOR POOL AND SPA SOLAR HEATING	PΣ

The RS280 provides control capability for direct switching of pumps in solar systems used in heating large pools. Use of auxiliary pumps rather than valves to circulate water through the solar panels is recommended in systems having filter lines of 2½" diameter. In such systems, the cost of booster pumps is generally less than the cost of valves.

The RS280 activates the solar circulating pump when the solar sensor is 7°F hotter than the pool water. The control turns off the pump when the temperature differences decreases to 3°F. A customer-adjustable thermostatic control is a standard feature of the unit and is designed to shut off the solar system to prevent over-heating of the pool.

The RS280 is housed in a raintight NEMA enclosure designed for outdoors mounting. It is designed for easy retrofit wiring to the load side of the existing pump timer.

SPECIFICATIONS RS280:

Input: 110 VAC or 220 VAC (Specify as required)

Output: 2PDT relay rated at 15 amps.

Sensor voltage: less than 5.6 Vdc

Range of customer-adjustable thermostatic control: 55°F – 115°F

Control points: △ T on = 7°F; △ T off = 3°F

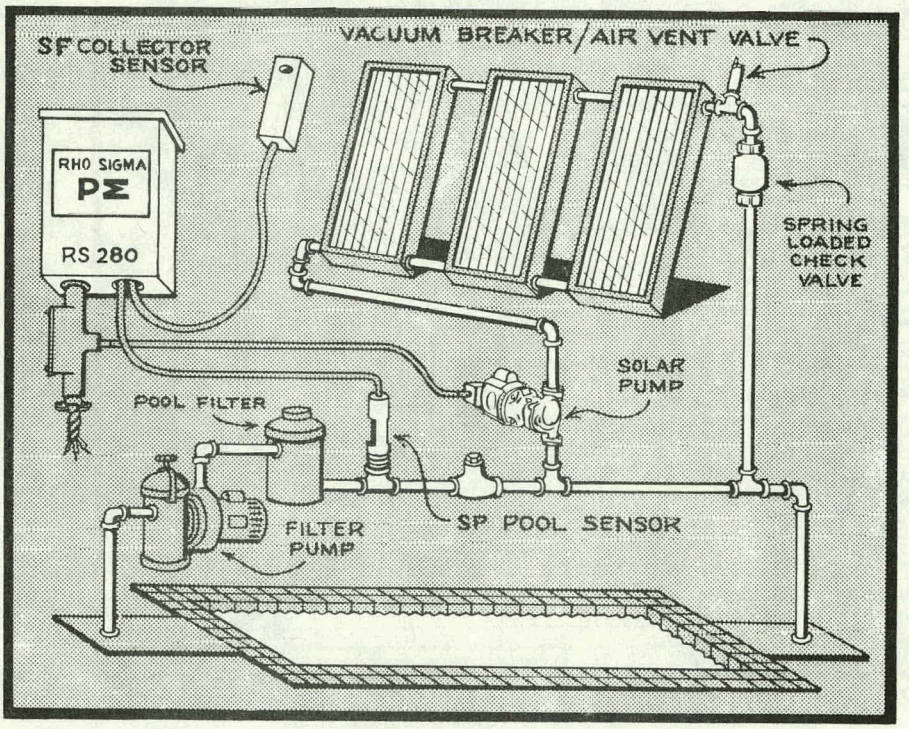

SENSORS

Selection and installation of sensors are two of the most important factors affecting the operation of the solar system. Sensors must be located with adequate consideration to assure accurate sensing of the key portions of the solar system. They must be properly insulated (excepting the SF sensor when with unglazed collectors) to assure that they are not influenced by the ambient temperature.

All Rho Sigma sensors are electrically identical and are designed to withstand stagnation temperatures of solar collectors approaching 420°F. Two and only two sensors are required with each differential thermostat.

The **SA Sensor** is the temperature sensing element encased in epoxy.

The ST Sensor has a copper housing with a hole punched in it for bolting directly to the collector plate or suspending inside air ducts. Alternatively, a radiator hose pipe clamp may be used to secure the rugged sensor to the surface of a pipe. Or it may be slipped inside the insulation of the storage tank.

The **SF Sensor** is a 1"x1"x2", sandblasted and black-anodized aluminum sensor designed for use with unglazed solar collectors or in high flow rate, low ΔT systems. The screw provided with the sensor may be used to mount the sensor near the collector where it will sense the temperatre and availability of solar energy at the collector. Designed primarily for all use with the RS260 and RS280.

The **SPT-XX Sensor** has a probe at the end of its ½" pipe threads. The temperature-sensing element is at the tip of the all brass sensor. It is designed primarily for insertion into tanks to obtain the most accurate measurement of the fluid or air temperature inside. Standard probe lengths are 1½", 3", 4½", 6", 12", and 24".

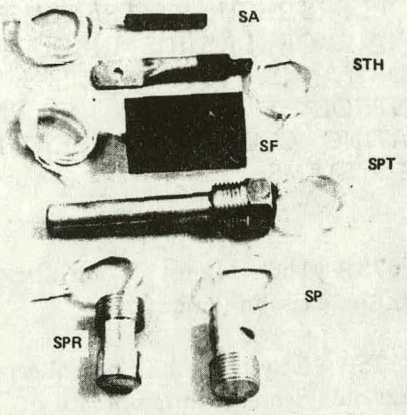

The **SP Sensor** is epoxied into a rugged brass housing with standard ½" pipe threads for easy installation into standard plumbing fixtures.

The **SPR Sensor** may be screwed into the end of a pipe which may be inserted into the top of a deep tank. Wires run inside of the pipe to the control. Provides accurate sensing of temperature at the bottom of deep tanks.

Sensors having a temperature range extending 400°C are available.

Rho Sigma Inc.
11922 Valerio Street
North Hollywood, Ca. 91605

TO:

TEMPERATURE CONTROLLERS

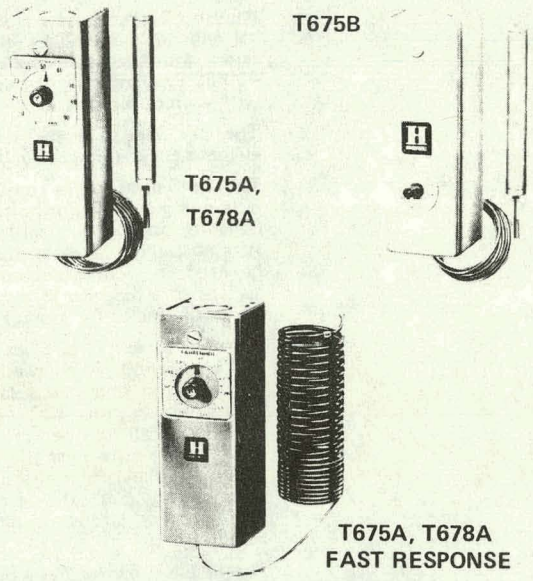

T675A,B T678A

Honeywell

THE T675 AND T678 TEMPERATURE CONTROLLERS REGULATE THE TEMPERATURE OF AIR OR LIQUIDS IN DUCTS, PIPES, AND TANKS. TYPICAL USES INCLUDE CONTROL OF DAMPERS AND VALVES IN HEATING, COOLING, OR HEATING-COOLING SYSTEMS.

- ☐ T675A High Limit Controller makes a circuit on a rise in temperature.
- ☐ T675B Low Limit Controller makes a circuit on a decrease in temperature.
- ☐ T678A Low Limit Controller makes two independent circuits in sequence on a decrease in temperature.
- ☐ Fast response models with adjustable differential available.
- ☐ Ambient temperature compensated.
- ☐ Setting knob on front.
- ☐ Sensing element may be mounted up to 20 feet from controller case.

E.S.
REV. 11-75

FORM 60-2200 —1
RESIDENTIAL DIV.

SPECIFICATIONS

MODELS (also refer to Table I):

T675A Temperature Controller — spdt switching to make or break a circuit on a temperature change; fast response models operate approximately seven times faster than standard models.

T675B Low Limit Temperature Controller — breaks a circuit on a temperature fall; must be manually reset.

T678A Temperature Controller—two spdt switches operate two independent circuits in sequence; fast response models operate approximately seven times faster than standard models.

TABLE I

MODEL NO.	RANGE	MAX. TEMP.	SWITCHING
T675A	0 to 100 F[a]/-15 to 35 C	125 F	spdt
	55 to 175 F[a]/ 15 to 75 C	200 F	
	80 to 180 F / 30 to 80 C	200 F	
	160 to 260 F / 75 to 125 C	280 F	
T675B[b]	30 to 50 F	125 F	spst
T678A	0 to 100 F[a]/-15 to 35 C	125 F	two spdt
	55 to 175 F[a]/ 15 to 75 C	200 F	
	80 to 180 F / 30 to 80 C	200 F	
	160 to 260 F / 75 to 125 C	280 F	

[a]Available with fast response sensing element.
[b]T675B scale is marked 30, 40, 50; set point is factory set and locked at 37 F.

SWITCH DIFFERENTIALS:

T675A—fixed differential models—1 F (.6 C); adjustable models—3 to 10 F (1.7 to 5.6 C); fast response models—3.6 to 12 F (2 to 6.6 C).

T675B—fixed 10 F (5.6 C).

T678A—fixed 3 F per switch with adjustable interstage 3 to 10 F (1.7 to 5.6 C); models with 55 to 175 F scale—fixed 3.6 F (2 C) per switch with adjustable interstage 3.6 to 12 F (2 to 6.6 C).

ELECTRICAL RATINGS:

T675A adjustable models and T678A:

	120 v ac	240v ac
Full Load	8.0	5.1
Locked Rotor	48.0	30.6

T675A nonadjustable models, 125 va at 120/208/240v ac.

T675B 125 va at 240v ac pilot duty.

MAXIMUM AMBIENT OPERATING TEMPERATURE: 125 F.

NOTE: The maximum recommended ambient for the T675B, when used for freeze-up protection, is 100 F. An ambient of 125 F lowers the switch break point about 1.5 F.

BULB SIZE: 1/2 x 4-3/16 inches for 0 to 100 F models; 1/2 x 3-9/16 inches for other scale ranges.

MAXIMUM BULB PRESSURE: 50 psig direct immersion.

CAPILLARY LENGTH AND MATERIAL:

T675A, T678A standard response models—5 or 20 foot copper, or 20 foot Monel or stainless steel.

T675A, T678A fast response models—5 foot copper with the sensing portion of element 1-1/2 inch dia. x 5 inches long (coiled 1/8 inch tubing). The coil may be stretched to approximately 10 inches.

T675B—10 foot copper.

CAPILLARY HOLDER: Honeywell part 131524A included with all fast response models.

(continued on page 3)

ORDERING INFORMATION

WHEN ORDERING REFER TO THE TRADELINE CATALOG OR PRICE SHEETS FOR COMPLETE ORDERING SPECIFICATION NUMBER, OR...

SPECIFY—
1. MODEL NUMBER.
2. SCALE RANGE.
3. STANDARD OR FAST RESPONSE MODEL.
4. CAPILLARY LENGTH AND MATERIAL.
5. FIXED OR ADJUSTABLE DIFFERENTIAL ON T675A.
6. ACCESSORIES, IF DESIRED.

ORDER FROM—
1. YOUR USUAL SOURCE, OR
2. HONEYWELL
   1885 DOUGLAS DRIVE, NORTH
   MINNEAPOLIS, MINNESOTA 55422
   (IN CANADA—HONEYWELL CONTROLS LIMITED
   740 ELLESMERE ROAD
   SCARBOROUGH, ONTARIO)

DIMENSIONS: See Fig. 1.

LISTING BODIES: Listed by Underwriters' Laboratories, Inc.

ACCESSORIES:

1. Separable immersion wells; short necked, 1/2 inch NPT, copper—order 112622AA. For additional information on immersion wells see Honeywell Tradeline Catalog.

2. Pressure fitting rated at 50 psi water or 15 psi air—order 7617ABY. For additional information on pressure fittings see Honeywell Tradeline Catalog.

3. Duct bulb holder 311266; also refer to Honeywell Tradeline Catalog.

4. T-strap 105900 for strapping the bulb to a pipe.

5. Bag assembly 7617ABZ with bracket for mounting the controller to fan coil units.

6. Calibration wrench 801534.

7. Bag assembly 7640HY with standoff bracket for mounting the controller to an insulated duct.

8. Q615A weatherproof enclosure.

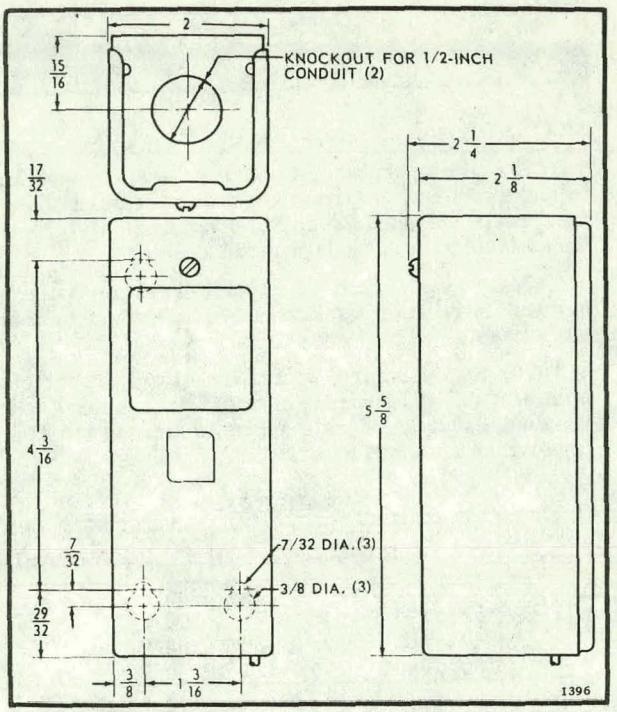

FIG. 1—DIMENSIONS (IN INCHES) OF T675 AND T678 CONTROLLERS.

INSTALLATION

CAUTION

1. Disconnect power supply before making wiring connections to prevent electrical shock and equipment damage.
2. Installer must be a trained, experienced serviceman.
3. Always conduct a thorough checkout when installation is complete.

LOCATION AND MOUNTING

The controller may be installed in any convenient position. Be sure to consider the length of the capillary before mounting controller.

Install the sensing element where it is exposed to the average temperature of the controlled medium. T675A fast response models must use the capillary holder furnished with the device. The sensing bulb of standard models should be held in place with a bulb holder, immersion well, or pressure fittings. (See Figs. 2-4.) Sharp bends or kinks in the capillary tubing affect the efficiency of the controller and must be avoided. Excess capillary should be carefully coiled and left directly beneath the controller.

NOTE: When pressure fittings are used in areas of vibration such as pipe lines, the bulb must be adequately supported.

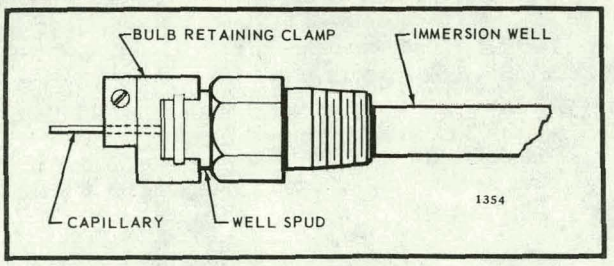

FIG. 3—IMMERSION WELL ASSEMBLY FOR MOUNTING SENSING BULB.

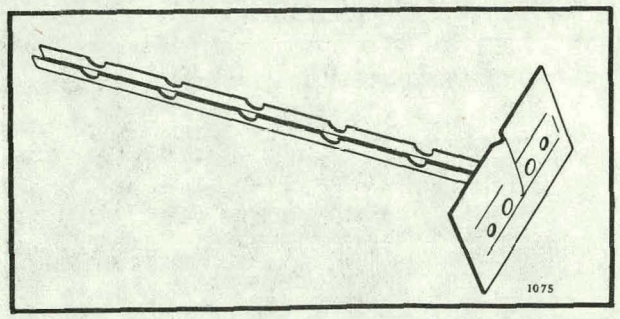

FIG. 2—BULB HOLDER FOR MOUNTING SENSING ELEMENT.

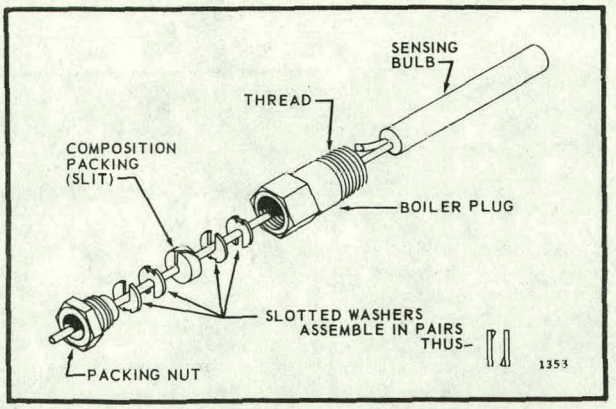

FIG. 4—COMPRESSION FITTING FOR PRESSURE TIGHT MOUNTING OF SENSING ELEMENT.

WIRING

All wiring must comply with local electrical codes and ordinances.

CAUTION
Disconnect the power supply before proceeding with wiring.

Two knockouts for 1/2 inch conduit are provided, one at top and one at bottom of case. Follow the wiring instructions furnished with the heating or cooling system. Fig. 5 shows the switching action.

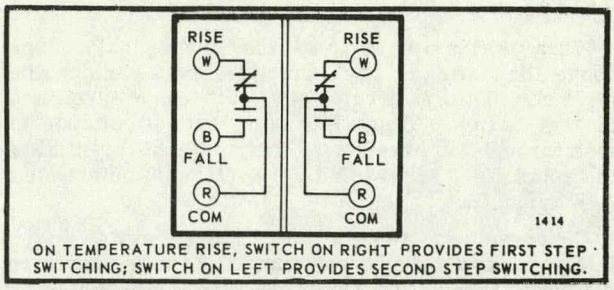

FIG. 5–T678A SWITCHING ACTION. T675A IS SIMILAR BUT HAS ONLY ONE SPDT SWITCH. T675B HAS ONE SPST SWITCH.

OPERATION

T675A

As the temperature of the controlled medium falls below the set point, less differential, the T675A switches to make terminals R to B and energize a normally closed solenoid valve to provide heat. In cooling applications, the T675A makes terminal R to W as the temperature rises above the set point and energizes cooling equipment. Fig. 7 shows the operation of the T675A.

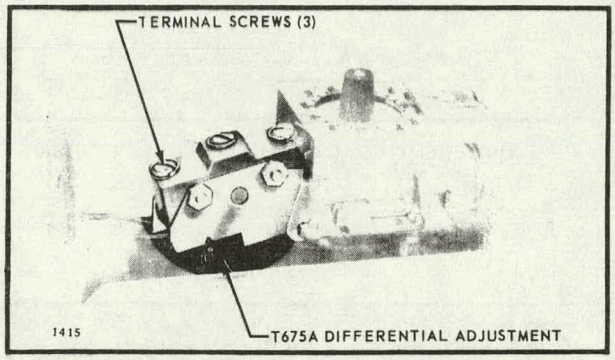

FIG. 6–INTERNAL VIEW OF T675A SHOWING THE SWITCH DIFFERENTIAL ADJUSTMENT WHEEL (APPLICABLE MODELS).

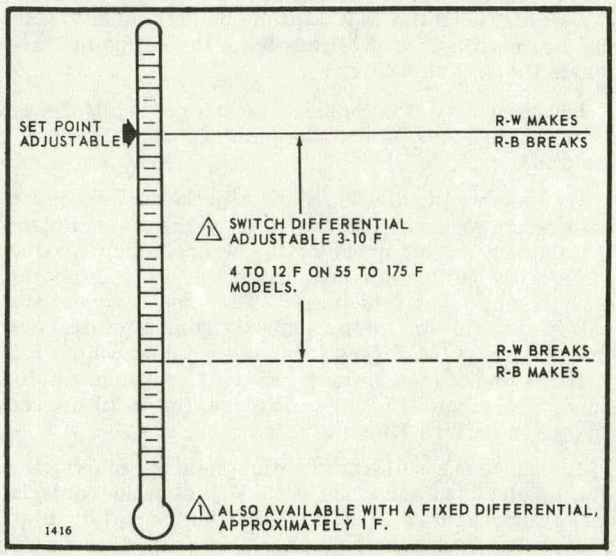

FIG. 7–DIFFERENTIAL ADJUSTMENT RANGE OF T675A.

FREEZE-UP PROTECTION

When using the T675A (auto-recycling) for freeze-up protection, the recommended set point is 38 F plus the switch differential.

example: SET POINT 38 F, plus 1 F (fixed differential model) equals an actual set point of 39 F.

example: SET POINT 38 F, plus 3 F (adjustable differential model) equals an actual set point of 41 F.

This ensures adequate safety factor for freeze-up protection.

NOTE: The T675B is a manual reset device and is specifically designed for freeze-up protection.

T675B

Used as a low limit controller, the T675B interrupts the operation of equipment if the temperature of the controlled medium falls below a predetermined limit. The device is reset manually after a rise in temperature of approximately 10 F. The operation of T675B is shown graphically in Fig. 8.

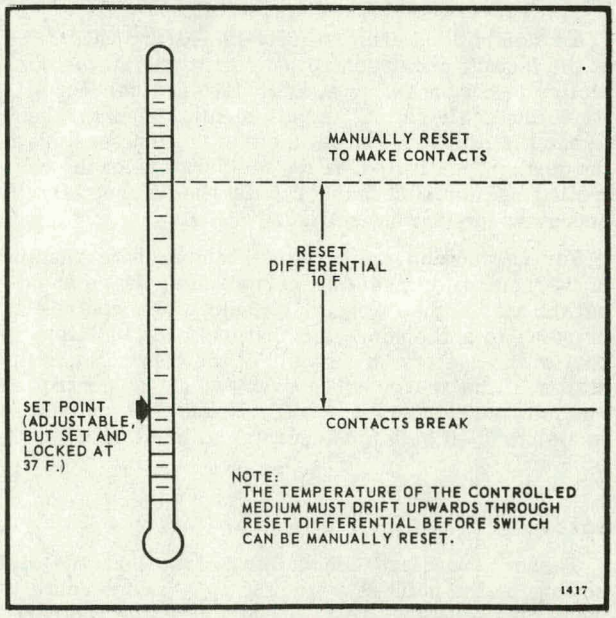

FIG. 8–DIFFERENTIAL ADJUSTMENT RANGE OF T675B.

T678A

When the temperature at the sensing bulb rises above the setting of the controller, the switch on the right completes a circuit between the R-W terminals of that switch. Should the temperature continue to rise through the preselected interstage differential of the controller, the switch on the left will complete its R-W circuit.

Conversely, on a temperature fall the switch on the left provides first step switching. If the temperature continues to fall, the switch on the right completes its R-B circuit to provide sequencing of equipment.

Each T678 has a between-switch differential adjustment. Make this adjustment by inserting a narrow screwdriver into the rectangular hole in the chassis (See Fig. 9) and pushing the star wheel. At its maximum position, interstage differential is 10 F. At minimum position differential is 3 F. Adjust until satisfactory operation is achieved.

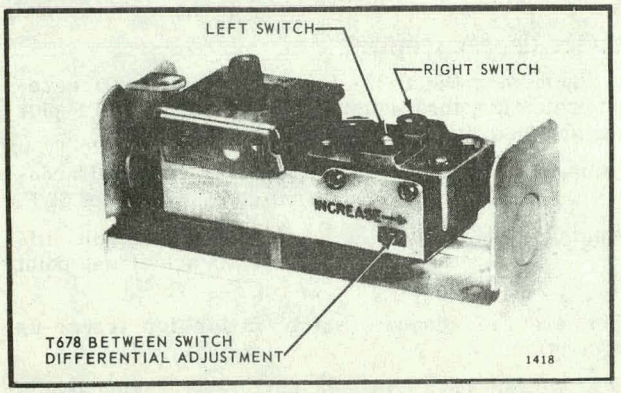

FIG. 9—INTERNAL VIEW OF T678A SHOWING THE BETWEEN SWITCH DIFFERENTIAL ADJUSTMENT.

The T678A Temperature Controller may be adjusted to give an interstage differential of three to ten degrees above the set point. The set point adjustment dial determines the temperature at which the right switch operates. The operation of the left switch is adjustable from three to ten degrees above that point of operation. An illustration depicting the operation of the T678A is shown in Fig. 10.

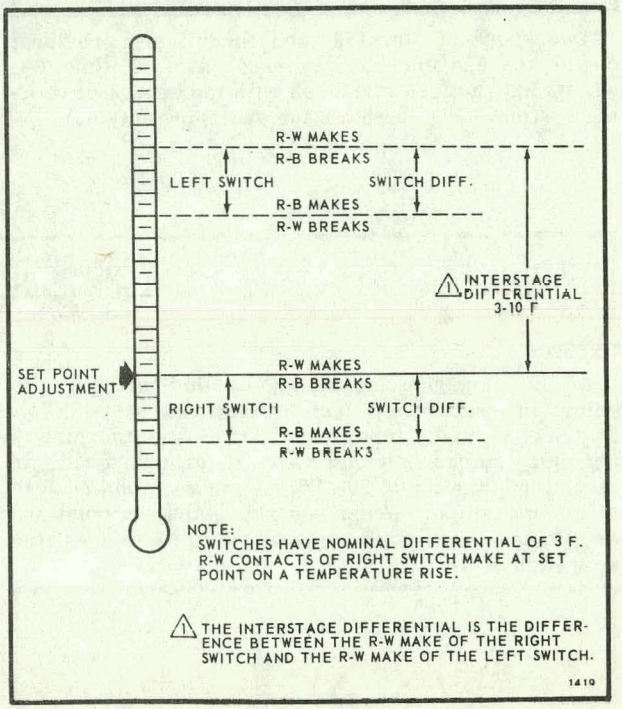

FIG. 10—DIFFERENTIAL ADJUSTMENT RANGE OF T678A.

CALIBRATION

All controllers are carefully tested and calibrated at the factory under controlled conditions. If the controller is not operating at a temperature corresponding to the scale setting and differential setting, check to see that the bulb senses the average temperature of the medium controlled. If the temperature of the controlled medium is changing rapidly the differential will appear wider than its setting.

For calibration, an accurate temperature reading of the controlled medium must be taken. Place an accurate thermometer near the bulb of the controller, or refer to a thermometer that has been installed as part of the system. If the bulb of the controller is installed in an inaccessible area, or if the controlled medium is unstable, it should be removed and placed in a controlled bath for accurate calibration.

T675A

These controllers are calibrated so that the dial setting is the point at which the R-W switch contacts make on a temperature rise. Measure the temperature at the bulb. Rotate the dial counterclockwise from the top of the scale, simulating a temperature rise, until the R-W switch contacts make. Note the dial reading. If it differs from the set point, calibrate the dial as follows:

1. Determine the number of degrees difference between the set point and the point at which the contacts make.

2. Remove the dial knob and slip the fingers of the calibration wrench into the slots of the dial. Rotate the dial until the fingers of the wrench drop into the slots of the calibration nut under the dial. Note the dial indication at this point. Turn the dial and the calibration nut up or down scale the number of degrees that the set point differs from the point at which the contacts make (determined in step 1). For example, move dial from 45 to 65 degrees for a 20 degree change in calibration.

3. Check the calibration adjustment by moving the dial up and down the scale while watching the contacts make and break. If dial is still out of calibration, repeat calibration procedure.

T675B

These controllers are calibrated so that the dial setting is the point at which the switch contacts break on a temperature fall. Measure the temperature at the bulb. Rotate the dial clockwise from the bottom of the scale to simulate a temperature fall until the switch contacts break. Note the dial reading.

If it differs from the set point, follow the calibration procedure outlined for the T675A.

T678A

These controllers are calibrated so that the nonadjustable (right hand) switch makes on a temperature rise and the adjustable (left hand) switch makes 3 to 10 F higher. The point at which the nonadjustable switch makes represents the dial setting. Rotate the dial reading. Continue rotating the dial until the left hand switch makes. The difference between the two readings is the interstage differential. The left hand switch must make at a lower reading than the right hand switch. Adjust the differential if necessary. Changing the differential may change the calibration.

Measure the temperature at the bulb. Rotate the dial counterclockwise from the top of the scale to simulate a temperature rise until the contacts of the left hand switch make. Note the reading.

If it differs from the set point, follow the procedure outlined for the T675A.

CHECKOUT

Check the operation of the controller by raising and lowering the set point through the temperature range of the air or liquid being controlled. Make sure that controlled equipment operates as intended.

HONEYWELL MINNEAPOLIS, MINN. 55408 INTERNATIONAL Sales Offices in all principal cities of the world. Manufacturing in Australia, Canada, Finland, France, Germany, Japan, Mexico, Netherlands, Spain, Taiwan, United Kingdom, U.S.A.

CONTACTORS

THIS SERIES OF MAGNETICALLY OPERATED DEFINITE PURPOSE CONTACTORS PROVIDE LINE OR LOW VOLTAGE CONTROL OF MOTORS IN REFRIGERATION AND AIR CONDITIONING EQUIPMENT OR OF NONINDUCTIVE ELECTRIC HEAT LOADS.

☐ These two, three, or four pole contactors switch motors up to 50 amps full load and resistive loads up to 60 amps.

☐ Provide up to three main poles with motor rating or up to four main poles with resistive rating.

☐ Auxiliary poles are available on two and three pole models to switch fans, pumps, or other auxiliary loads.

☐ Main pole contacts are double break, bridge type of silver cadmium oxide alloy. Auxiliary pole contacts, made of fine silver, are bifurcated for high contact reliability on low power applications.

☐ Pressure lug or screw terminals with quick connect or screw accessory terminals.

☐ Phenolic arc box with continuous barriers that prevent phase to phase arcing.

☐ Shock spring minimizes contact bounce.

☐ Stabilizing lever prevents armature rocking and assures "kiss-free" (no burning contacts) operation.

☐ Specially coated and welded magnet laminations minimize core and excitation loss.

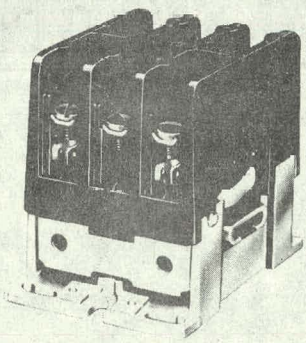

R8210, R4210
R8212, R4212

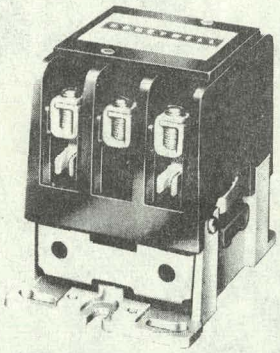

R8214, R4215
R8220

R4210, 11, 12, 13, 14, 15, 20, 21
R8210, 11, 12, 13, 14, 15, 20, 21

SPECIFICATIONS

TRADELINE MODELS

Tradeline models are selected and packaged to provide ease of stocking, ease of handling, and maximum replacement value. Tradeline model specifications are the same as those of standard models except as noted below:

TRADELINE MODELS AVAILABLE: R4214G, P, R4220B, R8212G, R8214G,P, R8220B Contactors. R8214G, P are available with or without coil (specify when ordering).

TERMINALS:

Coil—screw terminals.

Contact poles—pressure lug connectors; poles L1-T1 and L3-T3 have accessory screw terminals.

Auxiliary pole (four pole models)—10 amp normally open contacts with bifurcated surface for low power loads.

BAG ASSEMBLY INCLUDED:

Three pole models—bag assembly includes adapter mounting plate and screws, four double quick connects for contact terminals, and two single quick connects for coil terminals.

Four pole models—bag assembly includes all hardware listed for three pole models and includes hardware to convert fourth pole from a normally open fan pole, and normally closed auxiliary pole.

ADDITIONAL FEATURES:

Tradeline bag assembly provides hardware for terminal options.

Tradeline pack with cross reference label and special instruction sheet.

STANDARD MODELS

MODELS: Magnetically operated, definite purpose contactor series. Refer to Tables I-IV.

Table I	Model Numbers
Table II	Model Suffix Letters
Table III	Contact Ratings
Table IV and V	Contactor Coil Ratings

TABLE I—MODEL NUMBERS

MAIN POLE INDUCTIVE RATING	MODEL[a]			
	WITHOUT ENCLOSURE		WITH ENCLOSURE	
	24 VOLT COIL	LINE VOLTAGE COIL	24 VOLT COIL	LINE VOLTAGE COIL
25 Amp	R8210	R4210	R8211	R4211
30 Amp	R8212	R4212	R8213	R4213
40 Amp	R8214	R4214	R8215	R4215
50 Amp	R8220	R4220	R8221	R4221

[a]Determine appropriate suffix letter from Tables II and III when ordering.

TABLE II—MODEL SUFFIX LETTERS[d]
(25, 30, and 40 Amp Contactors)

(POLES)	A	B	C	D	E	F	G	H	J	K[b]	L	M	N	P	Q	R[c]	S[c]
Main	2	2	2	2	2	2	3	3	3	4	2	2	2	3	2	3	2
Fan	0	1	0	2	0	1	0	1	0	0	0	0	0	0	1	0	0
Aux. (N. O.)[a]	0	0	0	0	0	0	0	0	0	0	1	2	1	1	1	0	0
Aux. (N. C.)[a]	0	0	1	0	2	1	0	0	1	0	0	0	1	0	0	0	0

[a]For low voltage or low power (pilot duty) switching, use auxiliary poles only.

[b]30 and 40 amp K models have resistive rating only. 25 amp K model has inductive and resistive ratings on all poles.

[c]Resistive rating only on 25, 30, and 40 amp models.

NOTE: Main poles plus normally open auxiliary poles cannot total more than 4.

[d]50 amp contactor suffix letters

Suffix A—2 main poles, no fan, and no auxiliary poles.

Suffix B—3 main poles, no fan, and no auxiliary poles.

(continued on page 3)

ORDERING INFORMATION

WHEN ORDERING REFER TO THE TRADELINE CATALOG OR PRICE SHEETS FOR COMPLETE ORDERING SPECIFICATION NUMBER, OR . . .

SPECIFY–

1. MODEL NUMBER, INCLUDING SUFFIX LETTER. SPECIFY TRADELINE MODEL, IF DESIRED.
2. TYPE OF COIL TERMINALS (INCLUDE VOLTAGE RATING). SPECIFY TRADELINE R8214G,P WITHOUT COIL, IF DESIRED.
3. TYPE OF CONTACT TERMINALS.
4. TYPE OF ACCESSORY TERMINALS, IF OTHER THAN STANDARD.
5. NORMALLY OPEN AUXILIARY OR NORMALLY CLOSED AUXILIARY AND ACCESSORY TERMINALS, IF DESIRED.
6. NAMEPLATE CONFIGURATION IF OTHER THAN STANDARD. REFER TO FIGS. 3 AND 5.
7. INFORMATION ON HORIZONTAL MOUNTING, IF DESIRED.
8. ACCESSORIES, IF DESIRED.

ORDER FROM–

1. YOUR USUAL SOURCE, OR
2. HONEYWELL
   1885 DOUGLAS DRIVE NORTH
   MINNEAPOLIS, MINNESOTA 55422
   (IN CANADA–HONEYWELL CONTROLS LIMITED
   740 ELLESMERE ROAD
   SCARBOROUGH, ONTARIO)
   INTERNATIONAL SALES AND SERVICE OFFICES IN ALL PRINCIPAL CITIES OF THE WORLD.

TERMINALS:

Coil:
Choice of 1/4 inch single or double quick connect or number 8 binding head screws.

Contact Poles:
For 40-50 amp—Pressure lug connector is standard; 40 amp—for one number 4 wire or smaller; 50 amp—for one number 2 or smaller aluminum and copper wire. For 25-30 amps—screw terminals with number 10 binding head screw (for number 8 wire or smaller) is standard. Pressure connector is optional.

Accessory (on poles):
1/4 inch double quick connect is standard on poles 1 and 3 and is available on all poles. Number 6 binding head screw terminal is optional on any pole.

TABLE III—CONTACT RATINGS

NOMINAL RATING	LINE VOLTS	RATING IN AMPERES: MAIN POLES (NORMALLY OPEN ONLY) MOTOR RATING[b] 3Ø 3P OR 1Ø 2P. FULL LOAD	MAIN POLES MOTOR RATING LOCKED ROTOR	MAIN POLES RESISTIVE RATING (PER POLE)	FAN POLES (NORMALLY OPEN ONLY) MOTOR RATING (PER POLE) FULL LOAD	FAN POLES MOTOR RATING LOCKED ROTOR	FAN POLES RESISTIVE RATING (PER POLE)	AUXILIARY POLES (NORMALLY OPEN OR NORMALLY CLOSED) MOTOR RATING (PER POLE) FULL LOAD	AUXILIARY POLES MOTOR RATING LOCKED ROTOR	AUXILIARY POLES RESISTIVE RATING (PER POLE)
25 Amp	240	25	150	35[a]	15	90	15	10	60	10
	480	25	125	35	10	60	10	5	30	5
	600	25	100	35	10	60	10	5	30	5
30 Amp	240	30	180	40[a]	15	90	15	10	60	10
	480	30	150	40	10	60	10	5	30	5
	600	30	120	40	10	60	10	5	30	5
40 Amp	240	40	240	50[a]	15	90	15	10	60	10
	480	40	200	50	10	60	10	5	30	5
	600	40	160	50	10	60	10	5	30	5
50 Amp	277	50	300	60	—	—	—	—	—	—
	480	50	250	60	—	—	—	—	—	—
	600	50	200	60	—	—	—	—	—	—

[a]240 resistive rating also apply at 277v.

[b]25 and 30 amp model ratings are per pole. Two pole, 40 amp models have a per pole rating if used with loads of 240v or less and locked rotor rating of 180 amp or less. All other 40 amp models have 3Ø 3P or 1Ø 2P ratings.

TABLE IV—25, 30, AND 40 AMP CONTACTOR RATINGS: Coils are rated for 50/60 Hz, reference data is for 60 Hz.

RATED COIL VOLTAGE	COLOR CODE	SEALED VA	SEALED AMPS	SEALED WATTS	IN-RUSH VA	PICKUP VOLTAGE[b] R4210 R8210	PICKUP VOLTAGE[b] R4212 R8212	PICKUP VOLTAGE[b] R4214 R8214	DROP-OUT VOLTAGE	ADMITTANCE[a] OPEN	ADMITTANCE[a] CLOSED
24	Black	10.0	0.40	3.2	100	13±1.5	13.5±1.5	14±1.5	8	0.178 @ .5 pf	0.0167 @.32 pf
120	Red	10.0	0.078	3.2	100	63±10	68±10	71±10	51	0.007 @.51 pf	0.00065 @.33 pf
208/240	Green	11.5	0.048	4.0	115	120±15	127±15	132±15	92	0.002 @.57 pf	0.0002 @.35 pf
277	Blue	10.0	0.033	3.2	100	164±20	174±20	180±20	132	0.0013 @.52 pf	0.00012 @.33 pf
480	Grey	10.0	0.0197	3.2	100	285±35	300±35	310±35	225	0.00044 @.51 pf	0.000041 @.33 pf
500/600	Brown	10.0	0.0168	3.2	100	355±40	375±40	390±40	240	0.00030 @.51 pf	0.000028 @.32 pf

TABLE V—50 AMP CONTACTOR COIL RATINGS:

RATED COIL VOLTAGE	COLOR CODE	SEALED VA	SEALED AMPS	SEALED WATTS	IN-RUSH VA	PICKUP VOLTAGE[b] R4220 R8220	DROP OUT VOLTAGE	ADMITTANCE[a] OPEN	ADMITTANCE[a] SEALED
24	Black	16.8	0.700	6.5	158	15.5±1.5	12	0.275 @ 0.54 pf	0.0290 @ 0.38 pf
120	Red	17.6	0.147	6.6	166	75±10	55	0.0115 @ 0.53 pf	0.00123 @ 0.37 pf
208/240	Green	25.4	0.106	9.0	200	145±15	105	0.00348 @ 0.57 pf	0.00044 @ 0.35 pf
277	Blue	18.3	0.066	6.9	164	185±15	140	0.00211 @ 0.57 pf	0.000238 @ 0.38 pf
480	Grey	19.2	0.040	6.5	176	310±20	235	0.00075 @ 0.53 pf	0.000083 @ 0.34 pf
500/600	Brown	22.2	0.037	7.1	177	380±30	275	0.000495 @ 0.55 pf	0.000062 @ 0.32 pf

[a]Admittance is the reciprocal of coil impedance. To find the coil current draw at any voltage, multiply the admittance by the voltage; for instance at 18v with the armature open, I = (18) (0.178) = 3.2 amps.

[b]Pickup va: R8210 - 32.5 va, R8214 - 35 va, R8220 - 66 va.

71-92162

CONTACTS: Main contacts of silver cadmium alloy; auxiliary contacts of fine silver.

MOUNTING MEANS: Screws through zinc die cast base that can be mounted in any position on a vertical plane. Special models are available for horizontal mounting when "kiss-free" operation is desired. Standard models may be mounted horizontally for switching resistive loads. For replacing another contactor, see Replacement Guide.

SWITCH MOLDING: Electrical grade phenolic.

COVER/NAMEPLATE: 40 and 50 amp models only.

DIMENSIONS: See Fig. 4.

ACCESSORIES AND REPAIR PARTS (25, 30, and 40 amp contactors):

1. Adapter plate 126870 that allows R8210 series to replace R843, R8172 series (furnished with Tradeline models).

2. All metal enclosure 129703A. See Fig. 1.

3. Contactor coils for replacement or for contactors R8214G, P ordered without coils.

RATED COIL VOLTAGE	COLOR CODE	PART NUMBER AND TERMINALS	REPLACEMENT COIL ORDER NUMBER
24	Black	116616-screw terminals	4074BPF
		116612-quick connects	—
120	Red	116617-screw terminals	4074BPG
		116613-quick connects	—
208/240	Green	116618-screw terminals	4074BPH
		116614-quick connects	—
277	Blue	116622-screw terminals	4074ACA
		116626-quick connects	—
480	Grey	116623-screw terminals	4074ACB
		116627-quick connects	—
600	Brown	116848-screw terminals	4074BWE
		116847-quick connects	—

4. Replacement or optional terminals (25, 30 and 40 amp contactors).

DESCRIPTION[a]	PART NO.
Heavy duty—replaces 40 amp main poles.	4074BPE
Medium duty—replaces 25 and 30 amp main poles and 15 amp fan poles.	4074BPV
Auxiliary-light duty—10 amp and low voltage:	
Normally open	4074ACC
Normally closed	4074BPD

[a]Listed assemblies include power terminals and movable contacts and springs.

ACCESSORY AND REPAIR PARTS FOR 50 AMP CONTACTORS

1. Adapter plate 137397 for interchangeable mounting with competitive models.

2. All metal enclosure 129703A.

3. Replacement coils.

RATED COIL VOLTAGE	COLOR CODE	PART NUMBER AND TERMINALS	REPLACEMENT COIL ORDER NUMBER
24	Black	137226-screw terminals	4074BVU
		137220-quick connects	—
120	Red	137227 screw terminals	4074BVV
		137221-quick connects	—
208/240	Green	137228-screw terminals	4074BVW
		137222-quick connects	—
277	Blue	137229-screw terminals	4074BVY
		137223-quick connects	—
480	Grey	137230-screw terminals	4074BVZ
		137224-quick connects	—
600	Brown	137231-screw terminals	4074BWA
		137225-quick connects	—

UNDERWRITERS' LABORATORIES, INC. COMPONENT RECOGNIZED: File E14480, Guide NLDX2 (magnetic motor controller models).

R4210 and R8210A-H, J-N, P, Q
R4211 and R8211A-H, J-N, P, Q
R4212 and R8212A-H, J, L-N, P, Q
R4213 and R8213A-H, J, L-N, P, Q
R4214 and R8214A-H, J, L-N, P, Q
R4215 and R8215A-H, J, L-N, P, Q
R4220 and R8220A, B
R4221 and R8221A, B

File E40514, Guide WHMZ2 (magnetically operated switch models)
R4210 and R8210R
R4211 and R8211R
R4212 and R8212K, R
R4213 and R8213K, R
R4214 and R8214K, R

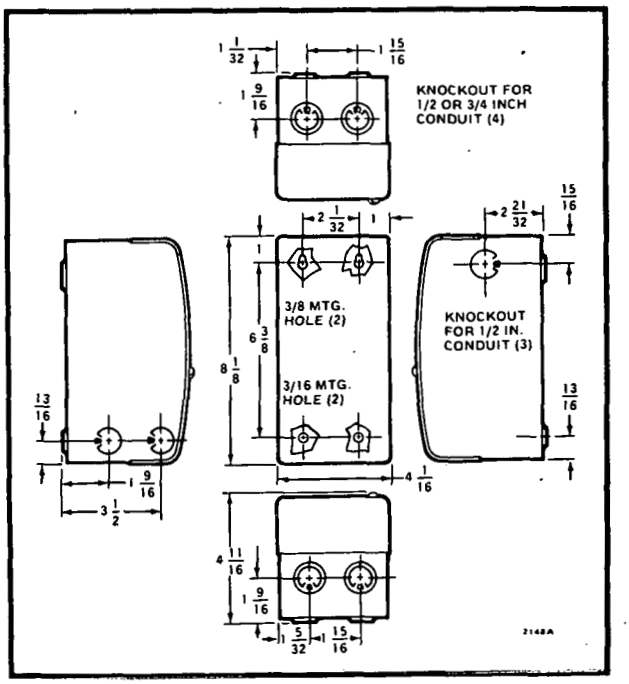

FIG. 1—MOUNTING DIMENSIONS (WITH ENCLOSURE NO. 129703A). CONTACTOR MOUNTING SCREWS ARE INCLUDED WITH ENCLOSURES.

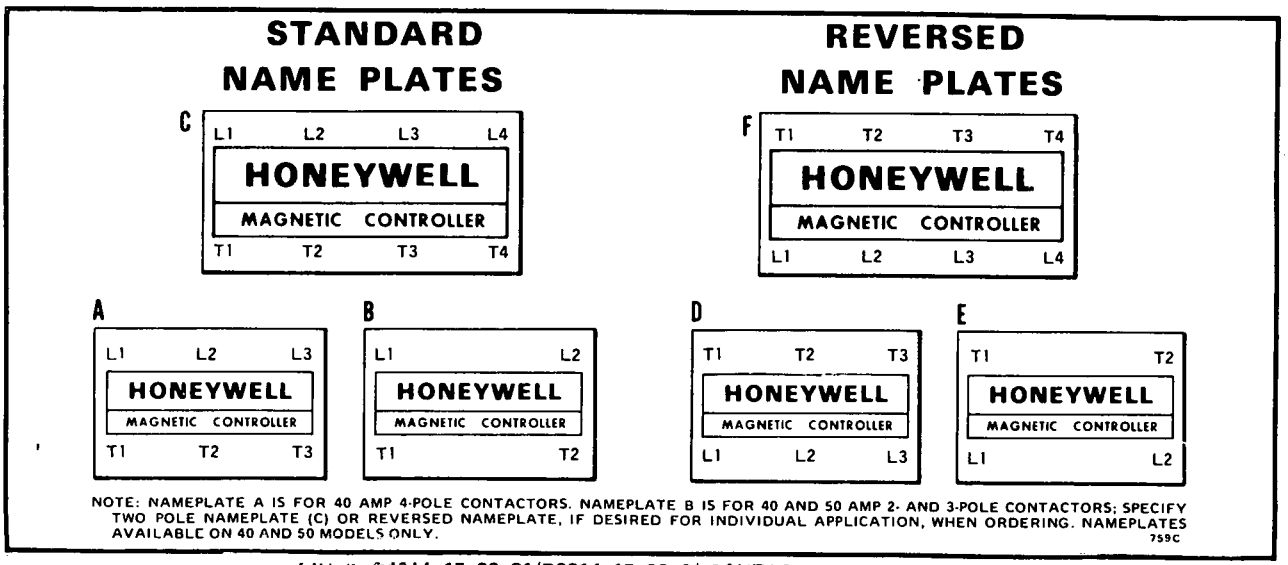

FIG. 2—R4214, 15, 20, 21/R0214, 15, 20, 21 CONTACTOR NAMEPLATES.

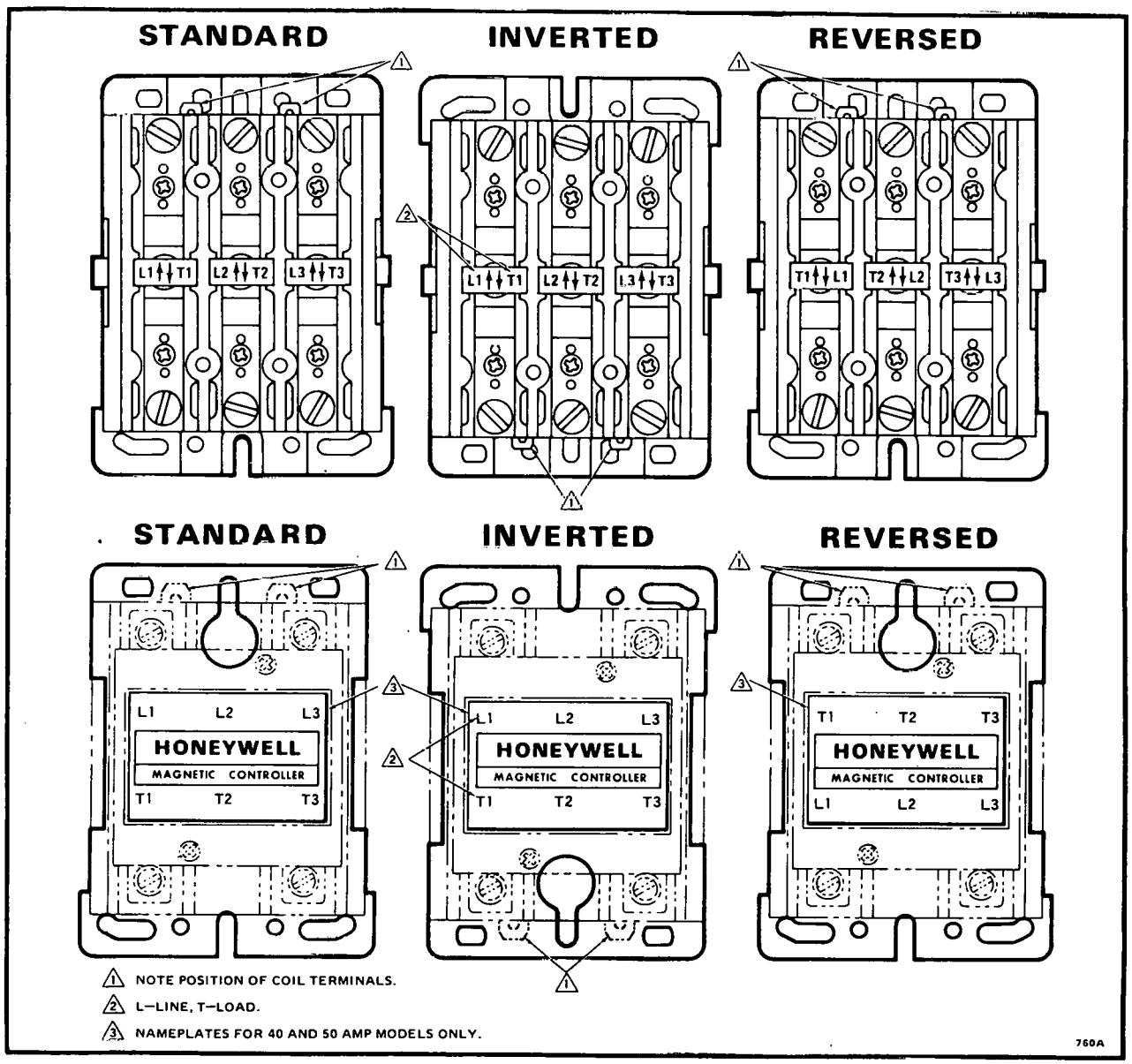

FIG. 3—R42--/R82-- CONTACTOR POLE CONFIGURATIONS.

71-92162

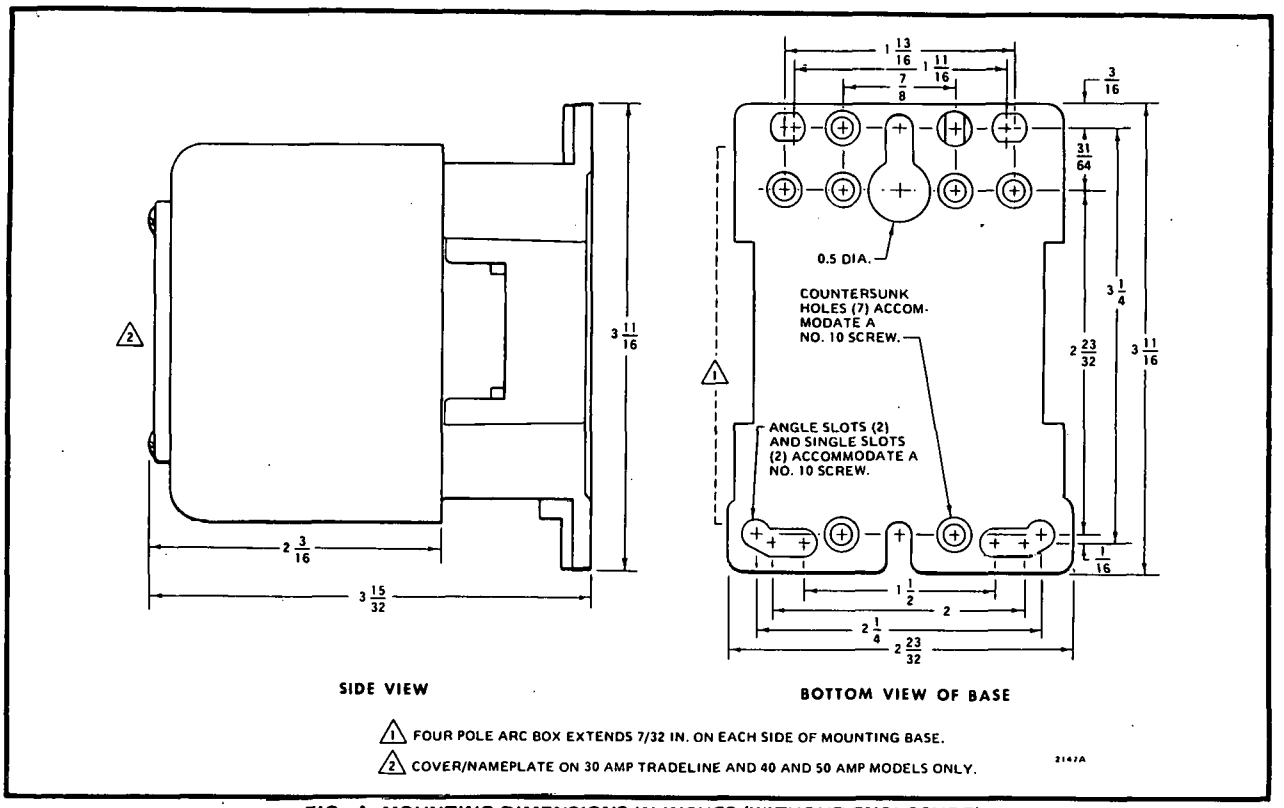

FIG. 4—MOUNTING DIMENSIONS IN INCHES (WITHOUT ENCLOSURE).

INSTALLATION

MOUNTING

When replacing an old contactor, follow the procedure below. In new applications, choose a suitable location on a vertical surface and omit steps 1 and 2.

CAUTION

Disconnect power supply before installing to prevent electrical shock and equipment damage.

1. Disconnect leadwires from old contactor one at a time, tagging them for correct reconnection.

2. Remove screws mounting old contactor to base or enclosure.

3. Mount the new contactor. Mounting holes of these contactors will align with those of most other manufacturers. (To replace R843 or R8172 contactors, use adapter plate 126870.) See Replacement Guide, page 9.

4. Connect leadwires to terminals.

WIRING

All wiring must comply with applicable codes and ordinances. Follow wiring instructions supplied with equipment being installed. Typical hookup diagrams are shown in Figs. 5-7. Other models are similar, refer to Table III for pole designations.

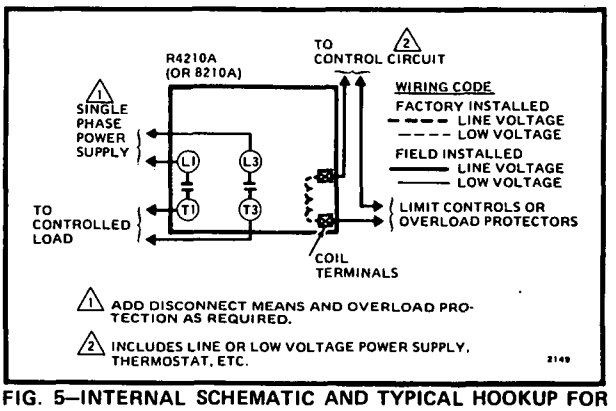

FIG. 5—INTERNAL SCHEMATIC AND TYPICAL HOOKUP FOR 2 POLE CONTACTORS.

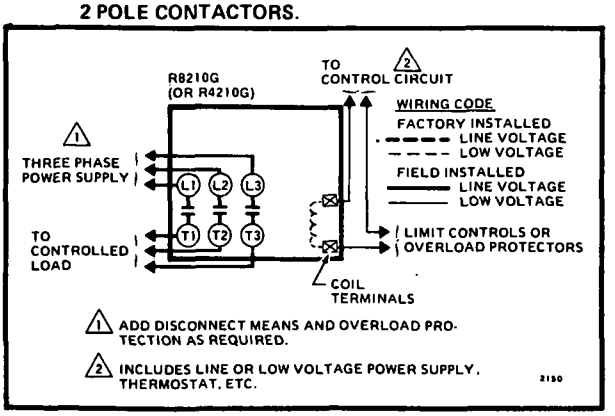

FIG. 6—INTERNAL SCHEMATIC AND TYPICAL HOOKUP FOR 3 POLE CONTACTOR.

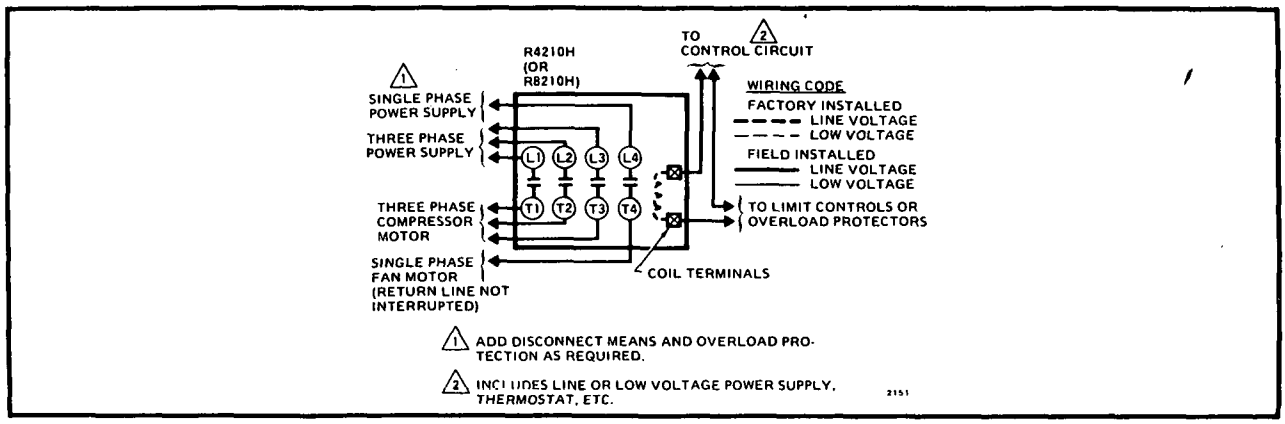

FIG. 7—INTERNAL SCHEMATIC AND TYPICAL HOOKUP FOR 3 POLE CONTACTOR WITH N.O. AUXILIARY OR FAN POLE.

TRADELINE TERMINAL OPTIONS

Tradeline contactors are shipped with screw terminals for coil connections and pressure connectors for the contact terminals; contact poles L1-T1 and L3-T3 have accessory screw terminals. The auxiliary pole L4-T4 on four pole models has 10 amp normally open contacts with a special shorting bar that has bifurcated contacts for switching low power loads. Standard models have terminals as specified when ordering; see options in Specifications section.

The following terminal options are possible using the accessory parts (order separately for standard models; furnished in the contactor bag assembly for Tradeline models).

CONTACT TERMINALS—Double quick connects (four provided) may be added to accessory screw terminals on contact poles L1-T1 and L3-T3. See Fig. 8.

COIL TERMINALS—Single quick connects (two provided) may be added to screw terminals on the contactor coil if desired. See Fig. 9.

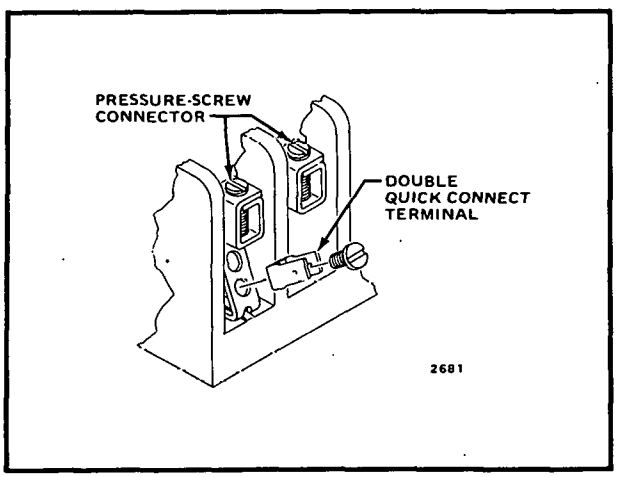

FIG. 8—ATTACHING DOUBLE QUICK CONNECTS TO CONTACT SCREW TERMINALS.

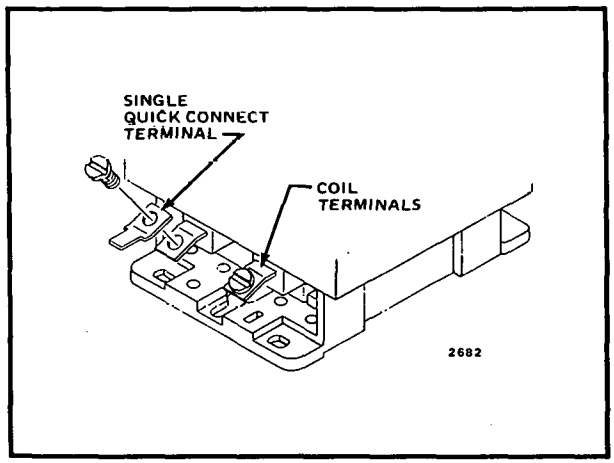

FIG. 9—ATTACHING SINGLE QUICK CONNECT TO COIL SCREW TERMINALS.

AUXILIARY POLE—The auxiliary pole L4-T4 may be adapted to the following:

A. 10 AMP NORMALLY CLOSED CONTACTS.

1. Remove the green spring, the shorting bar with bifurcated contacts, and the existing set of stationary contacts from terminals L4 and T4.
   NOTE: Use a long nose pliers to remove the spring and shorting bar. The shorting bar must be turned slightly to remove. See Fig. 10.
2. Turn contactor over and place shorting bar in position as shown in Fig. 11.
3. Compress green spring and insert between shorting bar and molded base of the contactor, see Fig. 11. Make certain spring is firmly positioned.
4. Turn contactor upright and place new stationary contacts from bag assembly over the top of the shorting bar. Make certain four rounded points on bar make contact with the stationary contacts. Firmly fasten each contact with screw as shown in Fig. 12.

71-92162

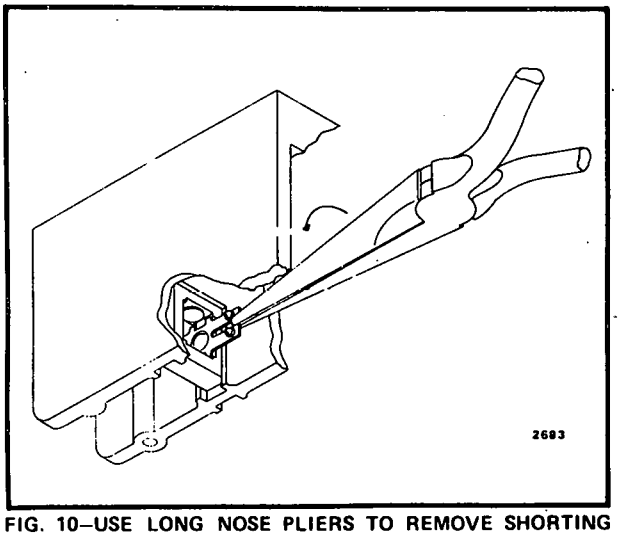

FIG. 10–USE LONG NOSE PLIERS TO REMOVE SHORTING BAR.

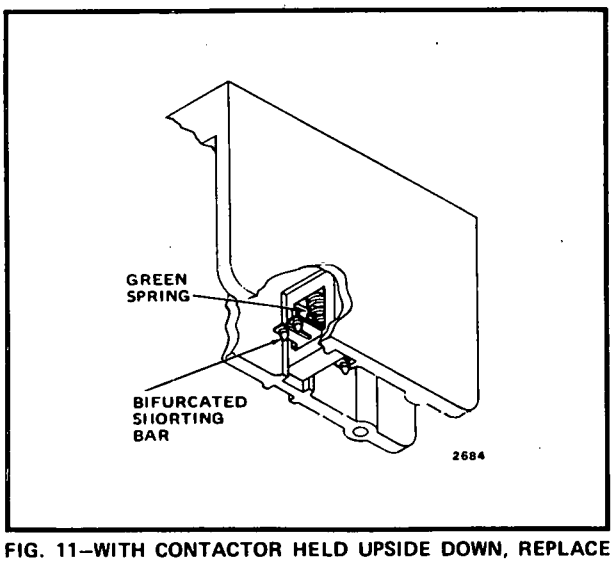

FIG. 11–WITH CONTACTOR HELD UPSIDE DOWN, REPLACE SHORTING BAR AND SPRING.

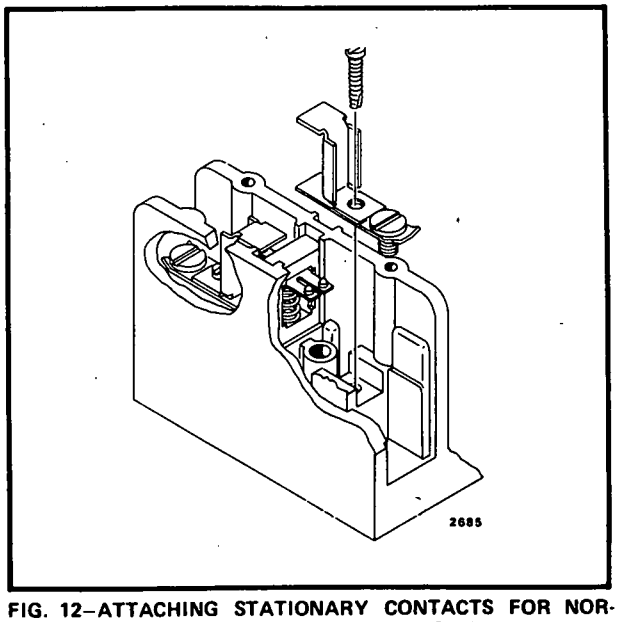

FIG. 12–ATTACHING STATIONARY CONTACTS FOR NORMALLY CLOSED CONTACT ASSEMBLY.

B. 15 AMP NORMALLY OPEN CONTACTS for switching fan or other load.

1. Remove the green spring and shorting bar from contactor terminals L4-T4.
   NOTE: Use long nose pliers to remove spring and shorting bar. Shorting bar must be turned slightly to remove. (See Fig. 10.)

2. Insert new heavy duty bar (from bag assembly) over stationary contacts (Fig. 13).

3. Compress green spring and insert between bar and plastic base. Do not use orange spring from bag assembly. Make certain spring is firmly positioned between the plastic and metal boss.

C. HEAVY DUTY NORMALLY OPEN CONTACTS for switching up to 50 amp resistive load.

1. Remove the green spring and shorting bar from contactor terminals L4-T4.
   NOTE: Use long nose pliers to remove spring and shorting bar. Shorting bar must be turned slightly to remove. (See Fig. 10.)

2. Insert new heavy duty bar (from bag assembly) over stationary contacts. Make certain bar contacts match stationary contacts.

3. Compress orange spring (from bag assembly) and insert between bar and plastic base (Fig. 13). The orange spring must be used to eliminate contact chatter under certain load conditions. Make certain spring is firmly positioned.

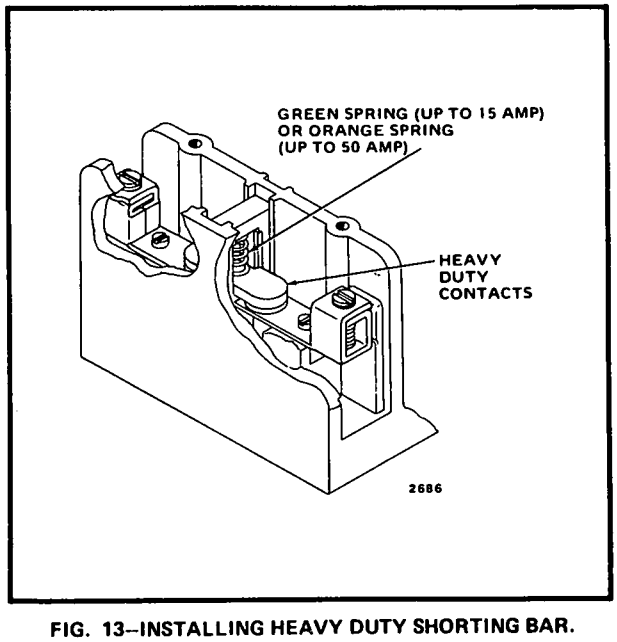

FIG. 13–INSTALLING HEAVY DUTY SHORTING BAR.

CHECKOUT

After the system installation and wiring are completed, turn on the power supply. Actuate the system components through the contactor. Before leaving the installation, observe system operation through at least one complete automatic cycle to make certain that the contactor operates properly and that the safety controls break the control circuit as required.

REPLACEMENT GUIDE

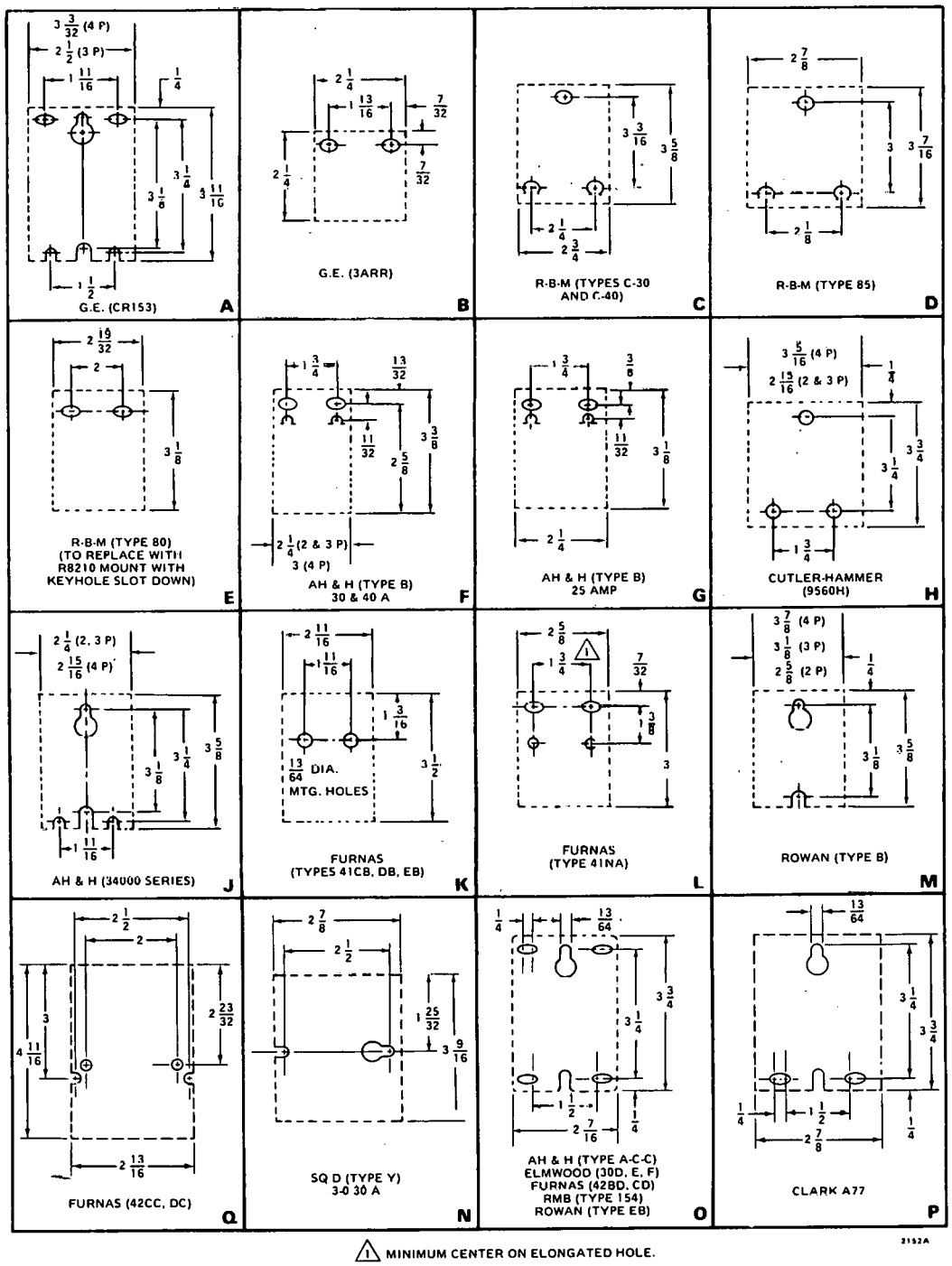

FIG. 14—MOUNTING DIMENSIONS OF COMPETITIVE CONTACTORS.

71-92162

REPLACEMENT GUIDE

TO REPLACE COMPETITIVE CONTACTORS (SEE FIG. 14)	TO REPLACE HONEYWELL CONTACTORS R443, R843 R4172, R8172
Mounting hole arrangements on the R82-- series contactors will usually permit direct replacement of the following models: GENERAL ELECTRIC: Type CR153—20, 25, 30, and 40 amp (2, 3, and 4 pole) Fig. 14A. Type 3AAR—25 amp (2 pole), Fig. 14B. R-B-M Type C-30—30 amp (2, 3, and 4 pole), Fig. 14C. (Catalog Numbers 109151 through 109155) Type C-40—40 amp (2, 3, and 4 pole), Fig. 14C. Type 85—25 amp (2 and 3 pole) Fig. 14D. Type 80—25 amp (2 pole), Fig. 14E. Type 136—30, 40 amp (2, 3, and 4 pole) Fig. 14C. Type 154—25, 30, 40 amp (2 and 3 pole) Fig. 14D. ARROW, HART, AND HEGEMAN: 34300 Series—30 amp (2, 3, and 4 pole) Fig. 14J. 34400 Series—40 amp (2, 3, and 4 pole) Fig. 14J. Type "B" (32200 Series)—25 amp (2 and 3 pole) Fig. 14G. Type "B" (32400 Series)—30 and 40 amp (2, 3, and 4 pole) Fig. 14F. Type ACC—25, 30, and 40 amp (2, 3, and 4 pole), Fig. 14O. CUTLER-HAMMER: 9560 Series—25, 30, and 40 amp (2, 3, and 4 pole), Fig. 14H. FURNAS Type 41NA, NB—25 amp (2, and 3 pole) Fig. 14L. Type 41CB—20 amp (2, 3, and 4 pole) Fig. 14K. Type 41DB—30 amp (2, 3, and 4 pole) Fig. 14K. Type 41EB—40 amp (2, 3, and 4 pole) Fig. 14K. Type 42BC, CC, DC—20, 30, 40 amp (2, 3, and 4 pole) Fig. 14Q. Type 42BD, CD—30, 40 amp (2, 3, and 4 pole) Fig. 14O. ROWAN: Type B—25, 30, and 40 amp (2, 3, and 4 pole), Fig. 14M. Type EBC—25, 30, and 40 amp (2, 3, and 4 pole) Fig. 14O. SQUARE D: Type Y—30 amp (3 pole) Fig. 14N. CLARK Type A77—25, 30, and 40 amp (2 and 3 pole) Fig. 14P. ELMWOOD SENSORS: Type 30D, E, F—25, 30, 40 amp (2 and 3 pole) Fig. 14O.	Use adapter plate 126870.

MAINTENANCE

TO REPLACE MOVABLE CONTACTS	TO REPLACE FIXED CONTACTS	TO REPLACE COIL
1. Disconnect power supply.	1. Disconnect power supply.	1. Disconnect power supply. 2. Remove arc box cover. 3. Remove all wiring connections (line, load, coil).
2. Remove arc box cover.	2. Remove arc box cover.	4. Remove contactor from mounting surface. 5. Place contactor upside down on flat surface and remove the four counter-sunk screws in the base.
3. Remove contact holding spring(s). If movable contact is n. c., it is necessary to first remove the fixed contacts—see steps 3 and 4 next column.	3. Disconnect wiring to the fixed contacts. Tag leads for proper reconnection.	6. Lift base up; the nested magnet lamination may come with it. 7. The coil can now be removed. Note position of coil leads, then replace with identical coil in identical position.

TO REPLACE MOVABLE CONTACTS	TO REPLACE FIXED CONTACTS	TO REPLACE COIL
	4. Loosen screw(s) fastening contact(s) to arc box; loosen until contact and screw can be lifted out.	IMPORTANT On models with open (not encapsulated) coils, two metal locators are used. When an open coil is reassembled to the contactors, the metal locators must be replaced exactly in their original positions, or premature contact failure may result. If the replacement coil is the fully encapsulated type, the locators are not needed and can be discarded.
4. Remove and discard movable contact(s). Replace with contact(s) of correct rating.		
5. Replace contact holding spring(s). If movable contact is n. c., also replace the fixed contacts.	5. Replace with contact of correct rating and screw down tightly.	
		8. With magnet lamination held nested in base, replace base on arc box. Fasten the four screws firmly.
6. Reconnect wiring, if necessary, then replace arc box cover.	6. Reconnect wiring, then replace arc box cover.	
		9. Remount the contactor. Reconnect all wiring and replace the arc box cover.
7. Re-establish power and check operation of the contactor.	7. Re-establish power and check operation of the contactor.	10. Re-establish power and check operation of the contactor.

WARRANTY "Unless otherwise specified, the Company warrants all Residential Division equipment manufactured by it and bearing its nameplate to be free from defects in workmanship and materials under normal use and service as follows:

1. Equipment which is received transportation prepaid at the factory originating shipment (1) within twelve months after date of manufacture, or (2) with a certification by the installer to be within twelve months after date of installation, and found by the Company's inspection to be defective in workmanship or materials within the guarantee, will be repaired or replaced at the Company's option, free of charge and returned lowest cost transportation prepaid. Premium transportation will be used at customer's request and expense;
2. If inspection by the Company does not disclose any defect covered by the guarantee, equipment will be repaired or replaced and the Company's regular service charge will apply;
3. WITH EXCEPTION OF THE FOREGOING AND UNLESS SPECIFICALLY EXPRESSED IN WRITING, THE COMPANY MAKES NO EXPRESS WARRANTIES, NO WARRANTIES OF MERCHANTABILITY AND NO WARRANTIES WHICH EXTEND BEYOND THE DESCRIPTION OF THE FACE HEREOF."

HONEYWELL MINNEAPOLIS, MINN. 55408 INTERNATIONAL Sales Offices in all principal cities of the world. Manufacturing in Australia, Canada, Finland, France, Germany, Japan, Mexico, Netherlands, Spain, Taiwan, United Kingdom, U.S.A.

Automatic Alternators

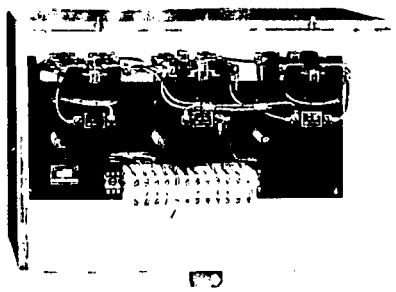

Bulletin 841, NEMA Type 1 Enclosure w/Cover Removed

ENGINEERING DATA –

Maximum Contact Ratings per Pole					
Maximum AC Voltage 50 or 60 Hz.	Amperes		Continuous Carrying Current	Volt-Amperes	
	Make	Break		Make	Break
120	60	6	10	7200	720
240	30	3	10	7200	720
480	15	1.5	10	7200	720
600	12	1.2	10	7200	720

OPERATION – The Bulletin 841 is used in conjunction with two magnetic starters and two float or pressure switches. One of the float or pressure switches is set to operate when the demand is such that one motor can handle it. The other switch is set to operate when the demand is so heavy that both motors are needed.

Control device "D1" (normal demand) alternately energizes one or the other motor each time it closes. When control device "D2" (heavy demand) closes, the idle motor is also started. This heavy demand switch can be omitted if not needed. The panels are designed for use with pilot devices having two normally open contacts.

Automatic alternators are often used with starters which have a "Hand-Off-Auto" selector switch in the cover. This feature permits manual operation of each motor.

Three-position selector switch units can be used for selecting the type of automatic operation desired. One position provides automatic alternate operation of each motor; the other two positions select one or the other motor for automatic operation by the first stage control device "D1". This feature is useful when one motor is disconnected from the line for maintenance or repairs.

★**CAUTION:** Before working on a pump, motor or starter, open its disconnect switch – unless disconnected from the power circuit, a starter may pick-up regardless of the position of selector switch "S1".

MAINTENANCE – Periodic inspection is recommended (monthly intervals are suggested initially, to be changed if indicated by experience). Check for cleanliness, condition of wiring connections and insulation, evidence of overheating, and condition (welding or excessive wear) of contacts. The armatures should operate freely.

REPAIRS – Control devices disassemble as depicted in the illustration below. Additional consideration should be given to the following techniques. Removal of at least one side of the stationary contact blocks is necessary to remove the cross bar. Movable contacts are best removed by pulling the contact sideways and upward. Removal of the operating coil is achieved, by removing the cross bar and the plunger screws and allowing the plunger to drop down. The coil is then "free" to be pulled out from the front. **NOTE** – when reassembling, the coil clamp MUST BE replaced with its concave side up. In general, all components should be carefully observed before removal and/or dis-assembly to help assure proper replacement.

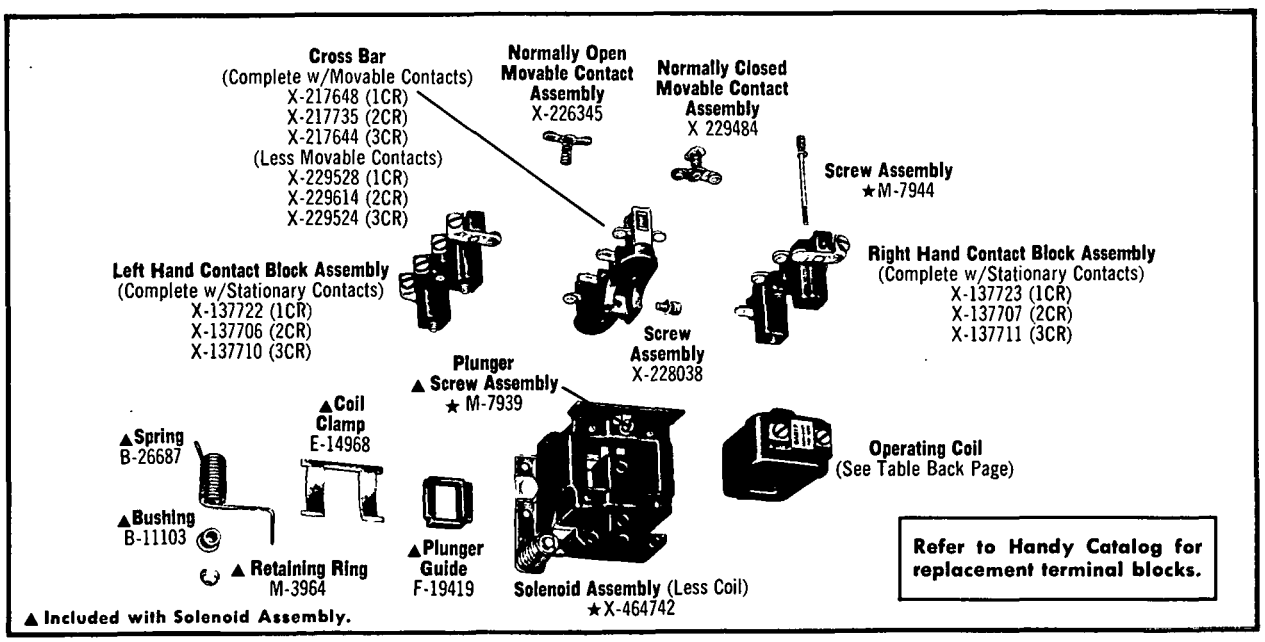

★ Added or changed since previous issue.

WIRING INSTRUCTIONS – Control Device "D1" is the first stage control and provides automatic alternating operation of both starters. Control device "D2" is the second stage control which operates the stand-by starter when the demand requires simultaneous operation of both starters. Disregard connections to control device "D2" when it is not used.

Both starters will operate automatically, and alternately, when their respective "HAND-OFF-AUTO" selector switches are set in the "AUTO" position and selector switch "S1" is set for position "1-2".

When starter #1 or starter #2 is taken out of service, selector switch "S1" must be set in position corresponding to remaining starter. The remaining starter will then be operated by the first stage control device "D1".

> ★**CAUTION:** Before working on a pump, motor or starter, open its disconnect switch – unless disconnected from the power circuit, a starter may pick-up regardless of the position of selector switch "S1".

Selector switch "S1" may be omitted but then permanent connections must be made between duplex panel terminals #7 & #8 and #5 & #9. Terminal #10 has no external connections.

Starter #2 will be operated only by control device "D2" when selector switch "S1" is not used and disconnect switch #1 is open. Panel terminals #8 and #10 must be jumpered, if starter #2 is required to be operated by control device "D1".

For manual operation of either starter, the selector switch must be set in the "HAND" position.

Wire terminals #2 and #6 on the panel to the "AUTO" position on the selector switches when "HAND-OFF-AUTO" selector switches are used. Terminals #1 on both panel and starter are common to the "HAND" position on the selector switch for starter #1; terminal #5 on panel and #1 on starter are common to the "HAND" position on the selector switch for starter #2. The common terminal of the selector switch is then wired to terminal #3 on the starter.

Terminals #2 and #6 on the panel are wired to terminal #3 of starter #1 and #2 respectively when "HAND-OFF-AUTO" selector switches are not desired.

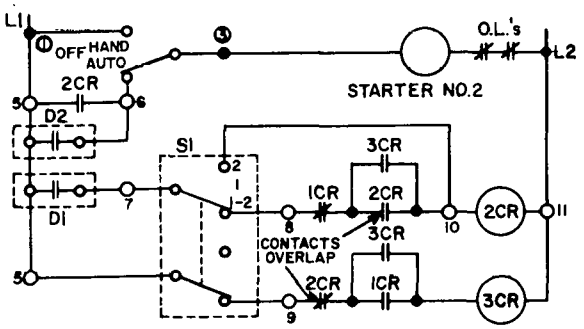

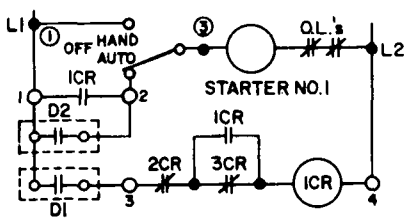

OPERATING COILS –

Volts	Hertz	Coil Number	★Coil Current		★Volt-Amperes	
			Inrush	Sealed	Inrush	Sealed
110	25	0A06P	.35	.109	39	12.0
110	60	0A01P	.99	.177	109	19.5
120	60	0A86P	.91	.163	109	19.6
110	50		.87	.183	96	20.1
208	60	0A113P	.52	.094	108	19.6
220	25	0A11P	.17	.054	38	11.9
220	60	0A06P	.495	.089	109	19.6
240	60	0A83P	.45	.081	108	19.4
220	50		.43	.091	95	20.0
440	25	0A15P	.089	.027	39	11.9
440	60	0A11P	.248	.044	109	19.4
480	60	0A288P	.227	.041	109	19.7
440	50		.22	.046	97	20.2
550	25	0A20P	.071	.022	39	12.1
550	60	0A16P	.198	.035	109	19.3
600	60	0A81P	.182	.033	109	19.8
550	50		.173	.036	95	19.8

ORDERING INFORMATION – Your order cannot be entered unless the following information is given: Part number, description of part, the catalog number and series letter of controller. This instruction sheet applies also to these controllers when used on control apparatus listed under other Bulletin numbers.

TYPICAL WIRING DIAGRAM – (See applicable codes and laws)

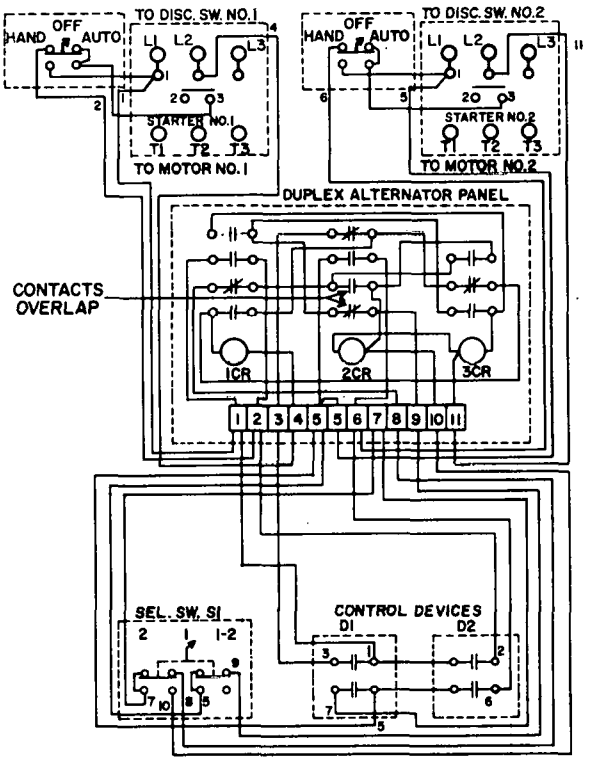

★ Added or changed since previous issue.

MAKES ALL SIZES OF

for every air handling, power, sewage, marine and industrial application

TEN OUTSTANDING ADVANTAGES

1. Adequate protection from surge pressures assured by Mercer Joint construction using strongest fabrics compatible with lightness.
2. Every Mercer Joint is finish coated with Hypalon to provide protection against acid fumes and ozone attack.
3. Mercer Joints assure exceptionally long life. They employ only the finest grades of rubber. They neither crack nor fracture under repeated flexing. They have long life expectancy because of materials and construction techniques.
4. Lightweight and can be inserted in the minimum of space. On pipe sizes up to eight inches, only six inches face to face is needed.
5. Mercer Joints are superior to metal, since they avoid any problems of electrolysis, corrosion or erosion. Require less space, but provide more lateral movement.
6. Joints can be designed for W.P. up to 165 PSI on standard type and higher on higher pressure grades. Vacuum ratings are up to 30″ depending on type.
7. Expansion Joints can be supplied for a temperature range of −20° to +400° F.
8. Mercer Joints are many times less expensive than broken pumps and compressors, with resultant downtime.
9. No gaskets are required between flanges of Mercer Joints and pipe flanges.
10. Insulate against vibration and help prevent transmission of sound along piping systems.

World's largest maker of Rubber Expansion Joints

M R SINCE 1866 · OVER 100 YEARS

MERCER RUBBER Company

136 Mercer Street, Trenton, N.J. 08690 P.O. Box CN-90001
Telephone: 609-587-1200

REPRESENTED BY:

RUBBER EXPANSION JOINTS

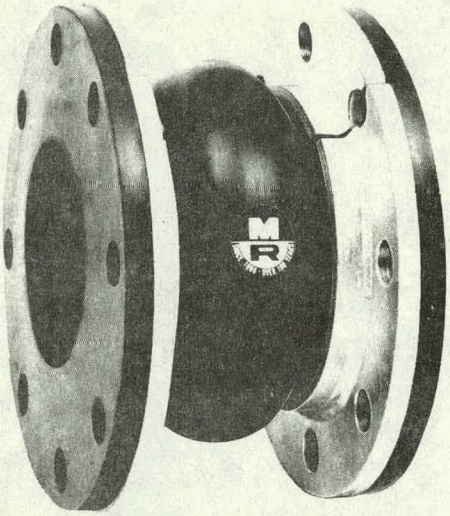

Can be Furnished with Filled or Unfilled Arch and Standard Control Units

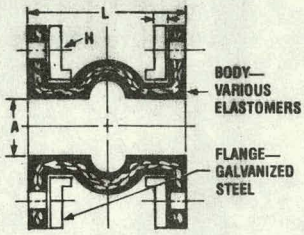

Single arch—standard 125# drilling and flanges supplied with special ⅜" thick galvanized split steel retaining rings

Working Pressure to 150 PSIG in all sizes
Vacuum to 15" with Open Arch
Vacuum to 25" with Filled Arch

Another Expansion Joint of Mercer's Superior Quality . . . **FOR HEAVY DUTY USE.** Variety of Elastomer's permits multi-purpose applications—A designed single arch with double arch movement, within a single arch standard length.

A Size	L Face to Face	H No. Holes	ALLOWABLE MOVEMENT* Lateral Deflection	Elongation	Compression
2	6	4	±¾"	±¾"	1 ¾"
2½	6	4	±¾"	±¾"	1 ¾"
3	6	4	±¾"	±¾"	1 ¾"
4	6	8	±¾"	±¾"	1 ¾"
5	6	8	±¾"	±¾"	1 ¾"
6	6	8	±1"	±¾"	1 ¾"
8	6	8	±1"	±¾"	1 ¾"
10	8	12	±1"	±¾"	1 ¾"
12	8	12	±1"	±¾"	1 ¾"

*For Filled Arch—half the above movement

STANDARD SPOOL TYPE

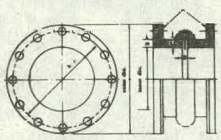

Styles 400, 500, 700, 510, 710, 2000EP, 2100B, 2500Av. The shortest face to face dimensions are available with this type of construction.

FILLED ARCHES

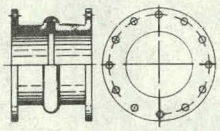

Styles same as Standard Spool Type. Spool-type with straight through or tapered ID. Single arch may be filled with soft rubber to inhibit restricting substances. Ideal for lines carrying heavy slurries or suspensions. Filled arch prevents materials obstructing arch and reducing flexibility. Allowable movement is reduced one-half.

MULTIPLE ARCH TYPE

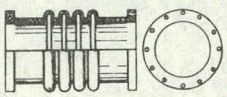

Styles same as Standard Spool Type. Ideal for installations where maximum expansion and contraction is present.

RECTANGULAR JOINTS

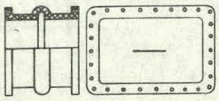

Style 3000. A custom-made flexible connector for use with rectangular flanges on low pressure service. The arch design accommodates greater movement than the "U" type joint. Made also without arch.

TAPER JOINTS

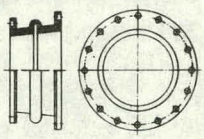

Styles same as Standard Spool Type. See factory for face to face lengths for 510 and 710 styles. Spool-type with tapered ID. Single or double arch, with flanged ends. Concentric or eccentric. Ideal for connecting piping to pump flanges of different diameters. Save space and installation costs.

SLEEVE TYPE EXPANSION JOINTS

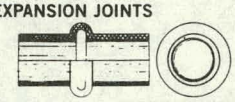

Style 5000. Note joint designed for W.P. as style 500 or 700 but clamps are limiting parameters. This joint is of the same design as the Full Face-Integral Flange Type Joint except that capped sleeve ends have an ID dimension equal to the OD of the pipe. The joints are designed to slip over the straight ends of the open pipe and be held securely in place with "King" Clamps or Knox Sectional Clamps.

TEFLON LINED JOINTS

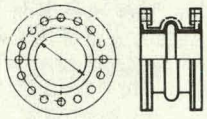

Style 1000. All standard constructions can be supplied with a Teflon liner and will operate to standard pressures, temperatures and movements.

OFFSET JOINTS

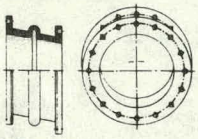

Styles same as Standard Spool Type. See factory for face to face lengths for 510 and 710 styles. Designed to remedy a specific misalignment of ⅛ inch or more, plus any non-parallelism of the flange faces. Straight through ID and single arch.

REPLACEABLE LINERS

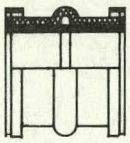

Can be furnished with our regular style 500 pressure only expansion joints.

"U" TYPE EXPANSION JOINTS

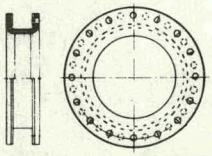

Style 401 is recommended for full vacuum service or a maximum pressure of 15 psig.

Bulletin No.—3377 A 10/78 10M

Created and produced by Lenhart Advertising usa, Princeton, N.J

APPENDIX "B"

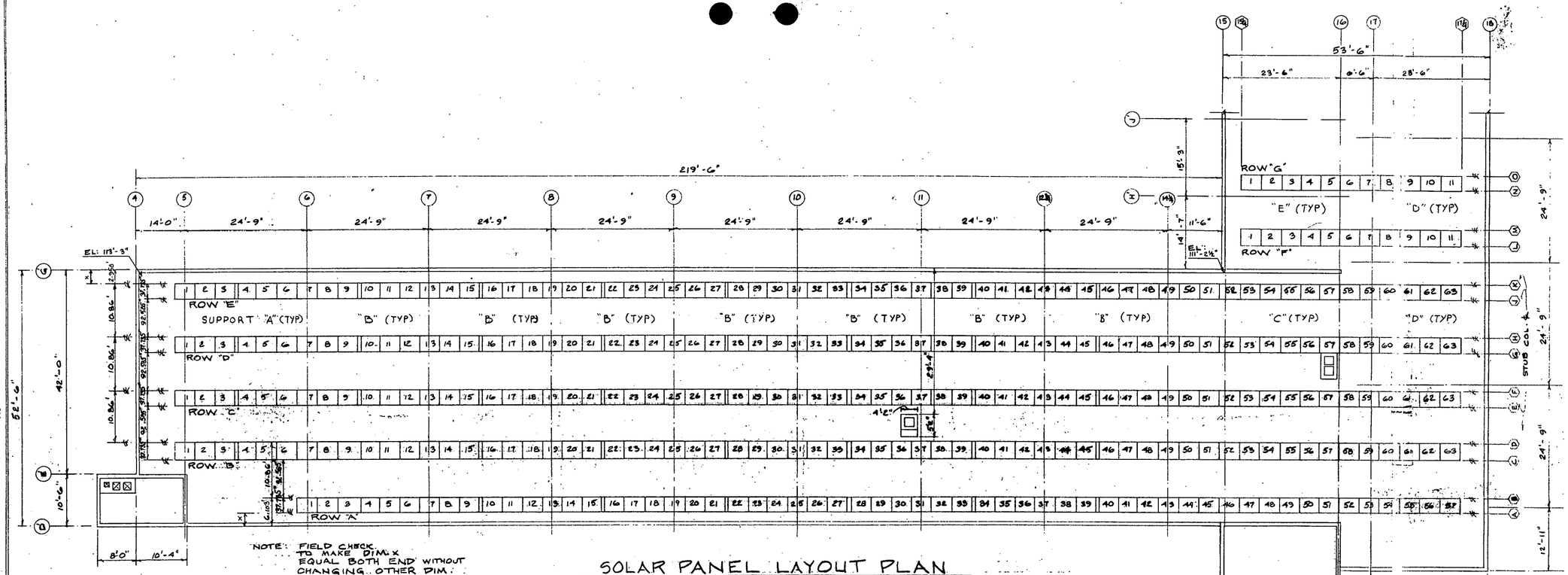

NOTE: FIELD CHECK TO MAKE DIM. X EQUAL BOTH END WITHOUT CHANGING OTHER DIM.

SOLAR PANEL LAYOUT PLAN

SCALE: 1/8" = 1'-0"

COLUMN SCHEDULE - STUB COLUMNS

COLUMNS - SAME TYPES	COL. LENGTHS
A6 THRU A15 ; K5 THRU K15	43.620"
B6 THRU B15 ; J5 THRU J15	40.152"
C5 THRU C15, H5 THRU H15	31.704"
D5 THRU D15, G5 THRU G15	28.260"
E5 THRU E15, F5 THRU F15	19.812"
A16 THRU K16	55.248"
A17 THRU K17	55.248"
A17 3/4 THRU K17 3/4	49.440"
L15 1/4 THRU O-15 1/4	26.856"
L17 3/4 THRU O-17 3/4	24.192"
L16 THRU O-16	30.00"
L17 THRU O-17	30.00"

COLM ENGINEERING
CONSULTING ENGINEERS
POST OFFICE BOX 208
AUDUBON, NEW JERSEY 08106

CHERRY HILL INN
TWP. OF CHERRY HILL, CAMDEN CO., N.J.

SOLAR PANELS SUPPORT SYSTEM & LAYOUT

WILLIAM F. GARIANO
ARCHITECT-ENGINEER-PLANNER
3509 Lewis Road-Newtown Square
Pennsylvania-19073

CN-
Date 1/18/78
Scale AS NOTED
Revised

SHEET 1 OF 6

WILLIAM F. GARIANO P.E.
N.J. LIC. NO. 15031
DATE: 1/18/78

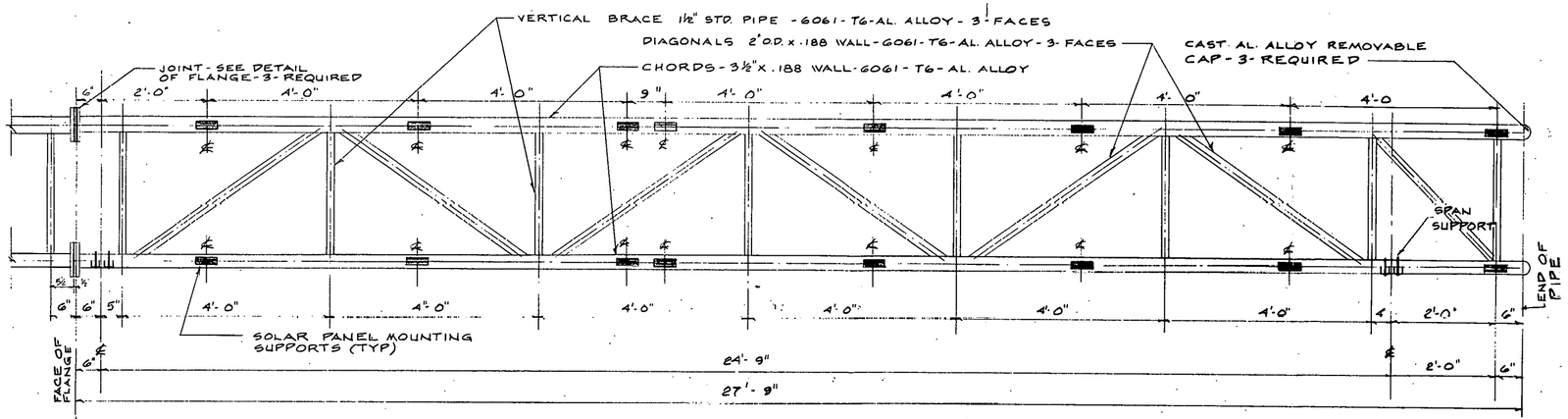

ALUMINUM SUPPORT - "A"

SCALE: 1" = 1'-0"

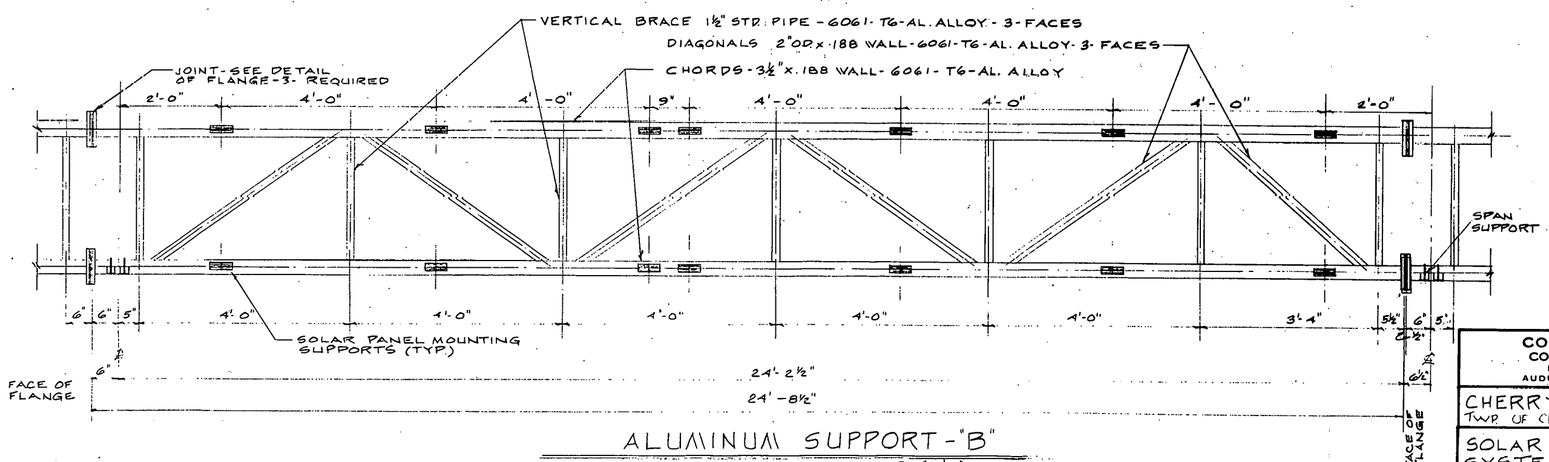

ALUMINUM SUPPORT - "B"

SCALE: 1" = 1'-0"

COLM ENGINEERING
CONSULTING ENGINEERS
POST OFFICE BOX 208
AUDUBON, NEW JERSEY 08106

CHERRY HILL INN
TWP. OF CHERRY HILL CAMDEN CO. N.J.

SOLAR PANELS SUPPORT SYSTEM & LAYOUT

WILLIAM F. GARIANO
ARCHITECT-ENGINEER-PLANNER
3509 Lewis Road - Newtown Square
Pennsylvania - 19073

CN-
Date 1/18/79
Scale AS NOTED
Revised

SHEET 2 OF 6

WILLIAM F. GARIANO P.E.
N.J. LIC. NO. 15031
DATE: 1/18/79

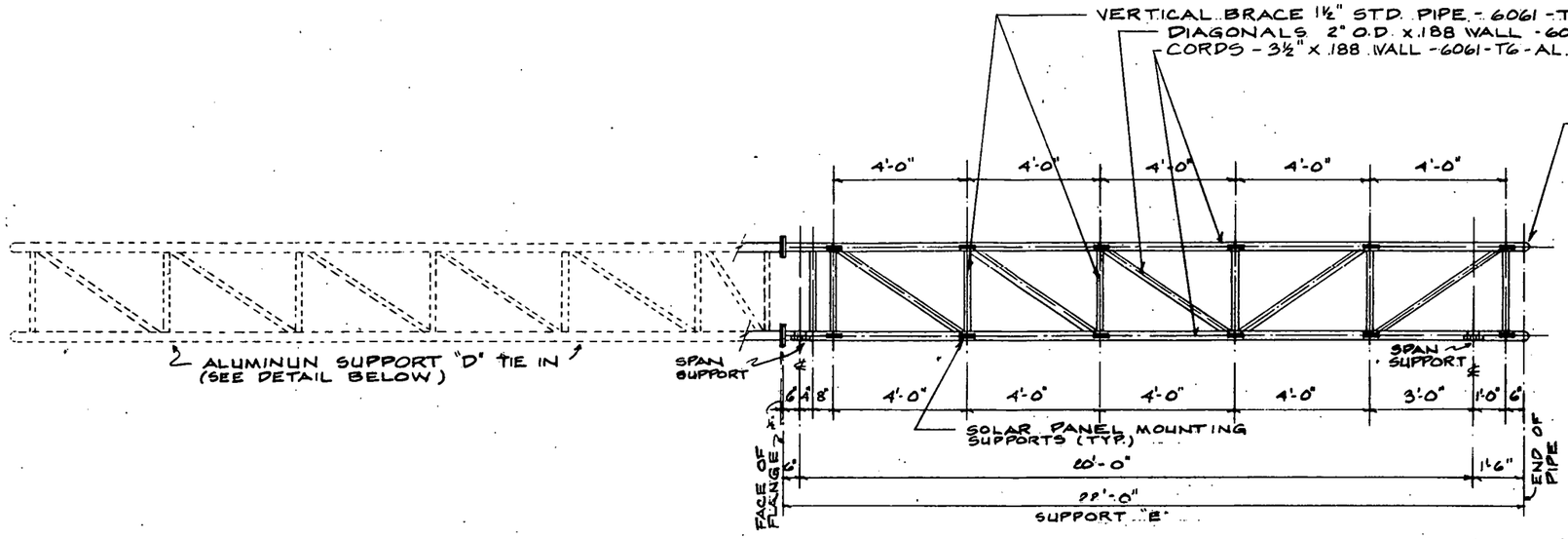

ALUMINUM SUPPORT "E"

SCALE: ½" = 1'-0"

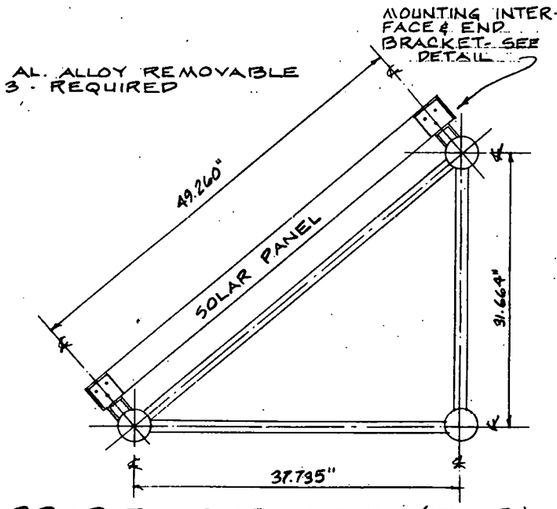

SUPPORT - END VIEW (TYP.)

SCALE: 1½" = 1'-0"

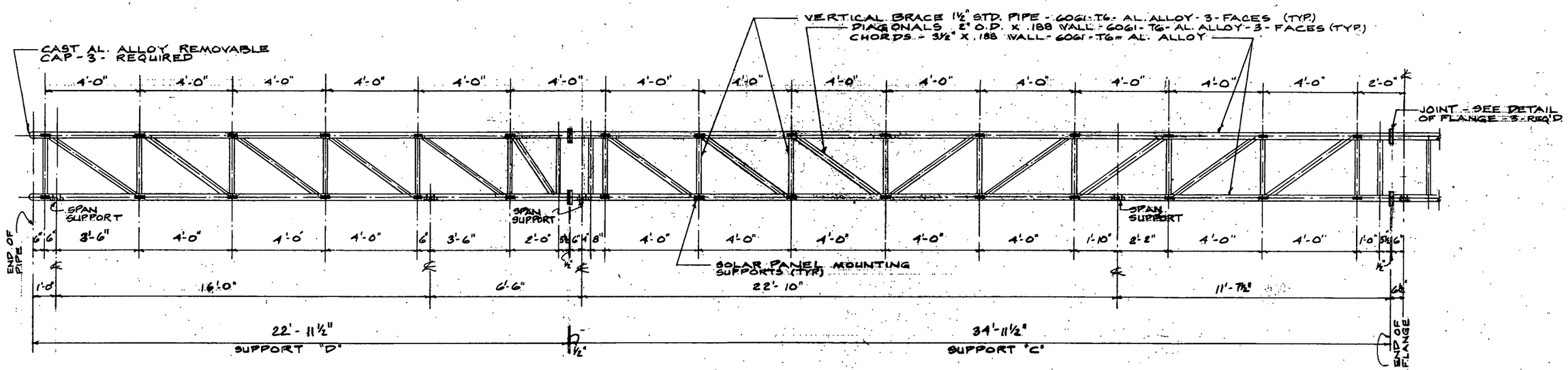

ALUMINUM SUPPORT "D"

SCALE: ½" = 1'-0"

ALUMINUM SUPPORT "C"

SCALE: ½" = 1'-0"

COLM ENGINEERING
CONSULTING ENGINEERS
POST OFFICE BOX 208
AUDUBON, NEW JERSEY 08106

CHERRY HILL INN
TWP. OF CHERRY HILL, CAMDEN CO., N.J.

SOLAR PANELS SUPPORT SYSTEM & LAYOUT

WILLIAM F. GARIANO
ARCHITECT-ENGINEER-PLANNER
3509 Lewis Road-Newtown Square
Pennsylvania-19073

CN-
Date 1/18/78
Scale AS NOTED
Revised

SHEET 3 OF 6

WILLIAM F. GARIANO P.E.
N.J. LIC. NO. 5031
DATE: 1/18/78

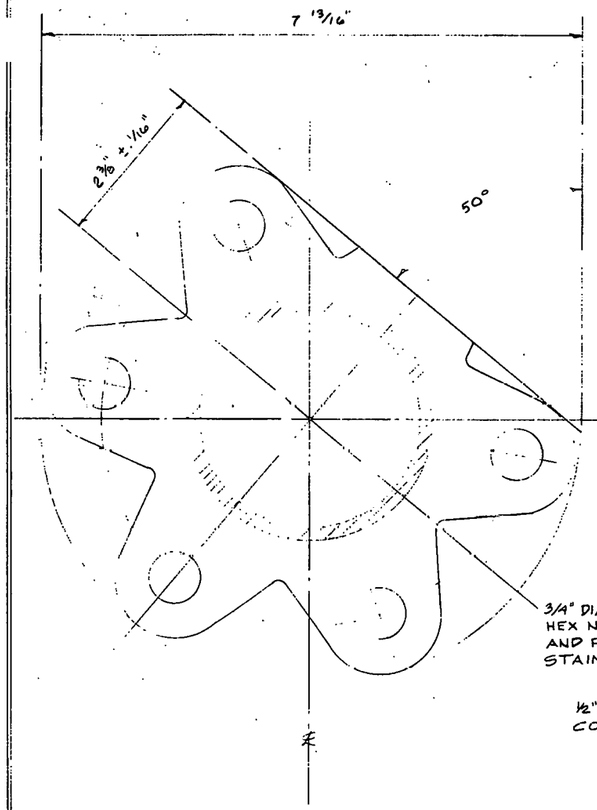

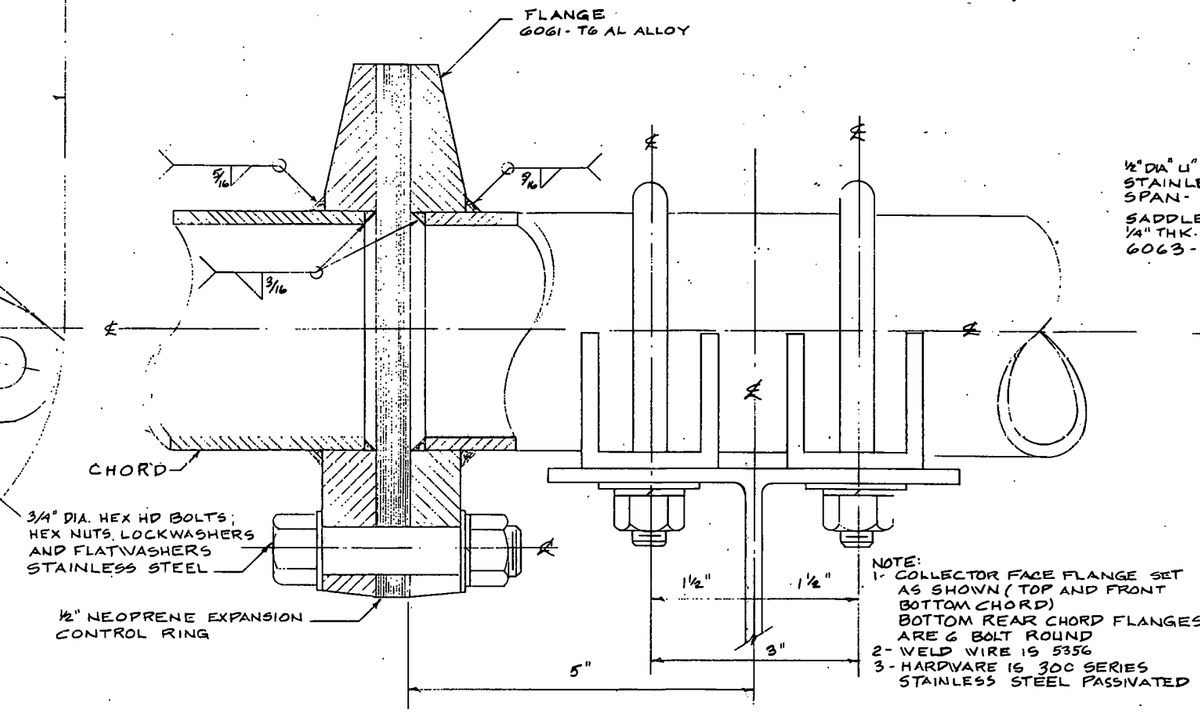

NOTE:
1- COLLECTOR FACE FLANGE SET AS SHOWN (TOP AND FRONT BOTTOM CHORD)
BOTTOM REAR CHORD FLANGES ARE 6 BOLT ROUND
2- WELD WIRE IS 5356
3- HARDWARE IS 300 SERIES STAINLESS STEEL PASSIVATED

DETAIL OF FLANGES - COLLECTOR FACE & SPAN SUPPORT BRACKETS

SCALE: FULL SIZE 1"=1"

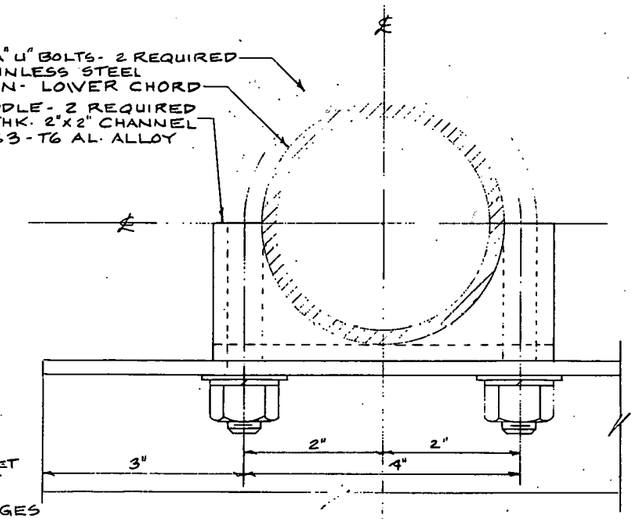

SPAN SUPPORT SADDLE

2 REQUIRED

SCALE: FULL SIZE 1"=1"

COLM ENGINEERING CONSULTING ENGINEERS POST OFFICE BOX 208 AUDUBON, NEW JERSEY 08106		
CHERRY HILL INN		
SOLAR PANELS SUPPORT SYSTEM & LAYOUT		
WILLIAM F. GARIANO ARCHITECT-ENGINEER-PLANNER 3509 Lewis Road-Newtown Square Pennsylvania-19073	CN- Date 1/18/79 Scale AS NOTED Revised	SHEET 4 OF-6
WILLIAM F. GARIANO P.E.	N.J. LIC. NO. 15031 DATE: 1/18/79	

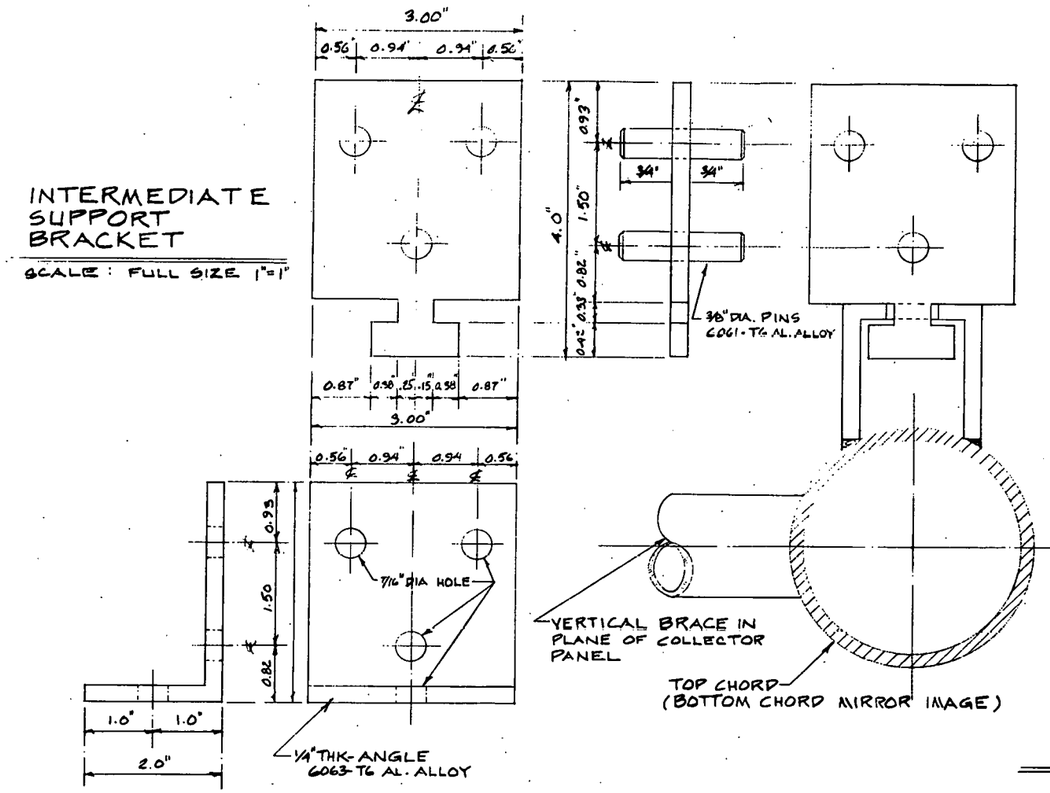

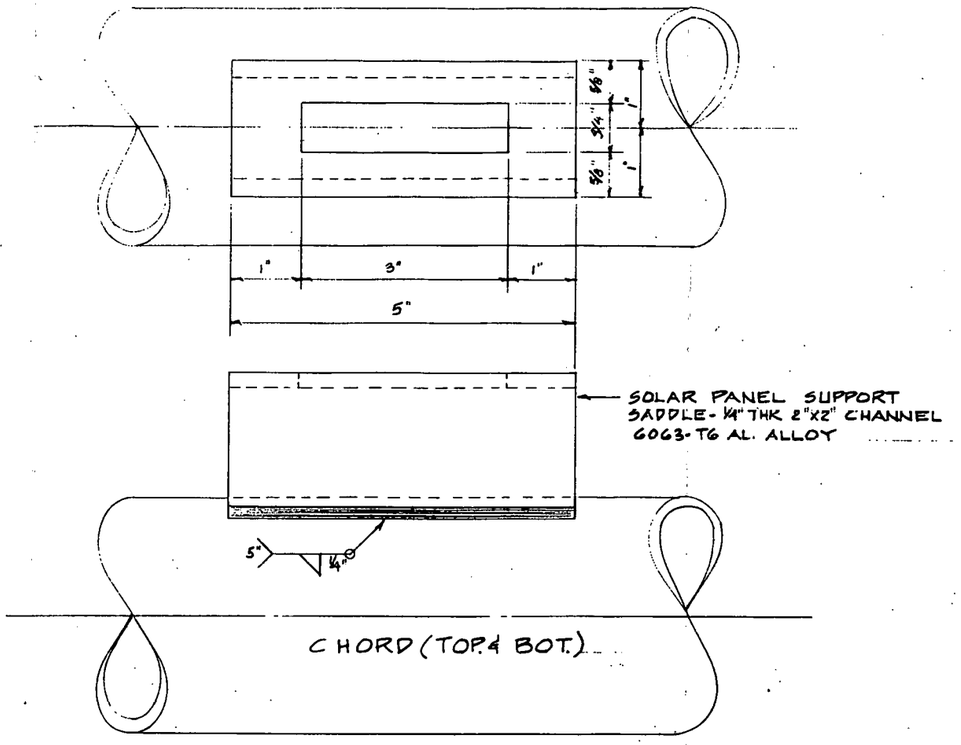

SOLAR PANEL SUPPORT SADDLE

SCALE: FULL SIZE 1"=1"

COLM ENGINEERING
CONSULTING ENGINEERS
POST OFFICE BOX 208
AUDUBON, NEW JERSEY 08106

CHERRY HILL INN
TWP. OF CHERRY HILL, CAMDEN CO., N.J.

SOLAR PANELS SUPPORT SYSTEM & LAYOUT

WILLIAM F. GARIANO
ARCHITECT-ENGINEER-PLANNER
3509 Lewis Road-Newtown Square
Pennsylvania-19073

CN-
Date 1/18/78
Scale AS NOTED
Revised

SHEET 5 OF-6

WILLIAM F. GARIANO P.E.
N.J. LIC. NO. 15031
DATE: 1/18/78

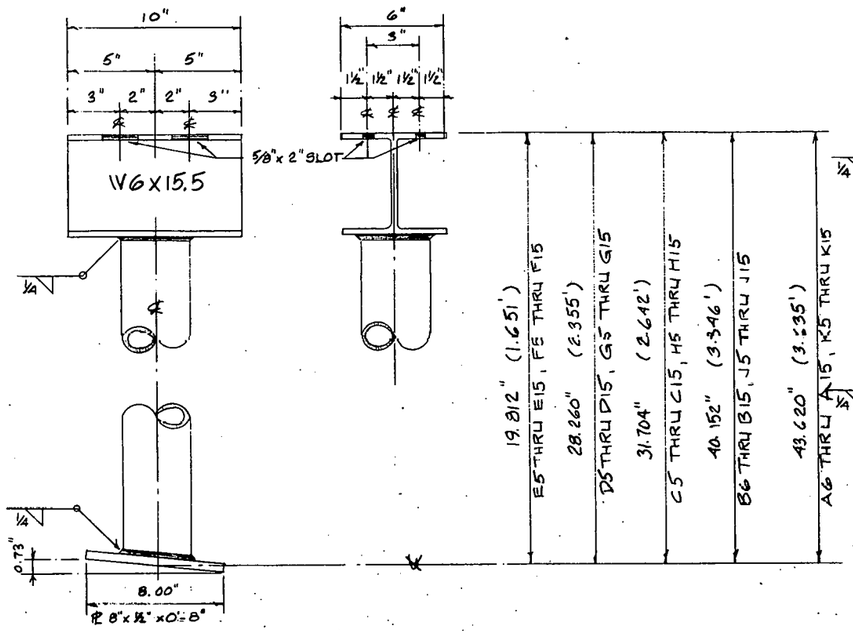

STUB COLUMN DETAILS

SCALE: 3" = 1'-0"

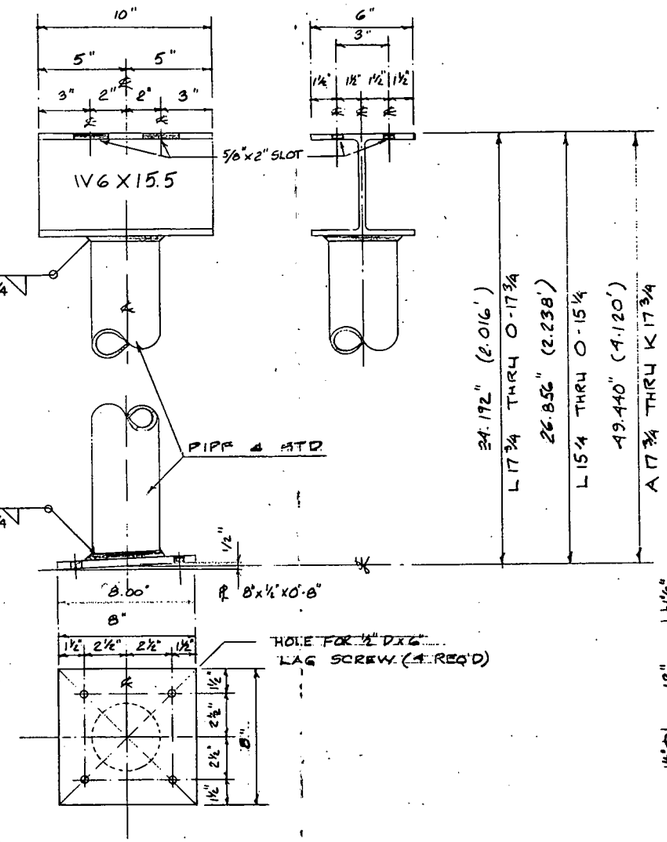

STUB COLUMN DETAILS

SCALE: 3" = 1'-0"

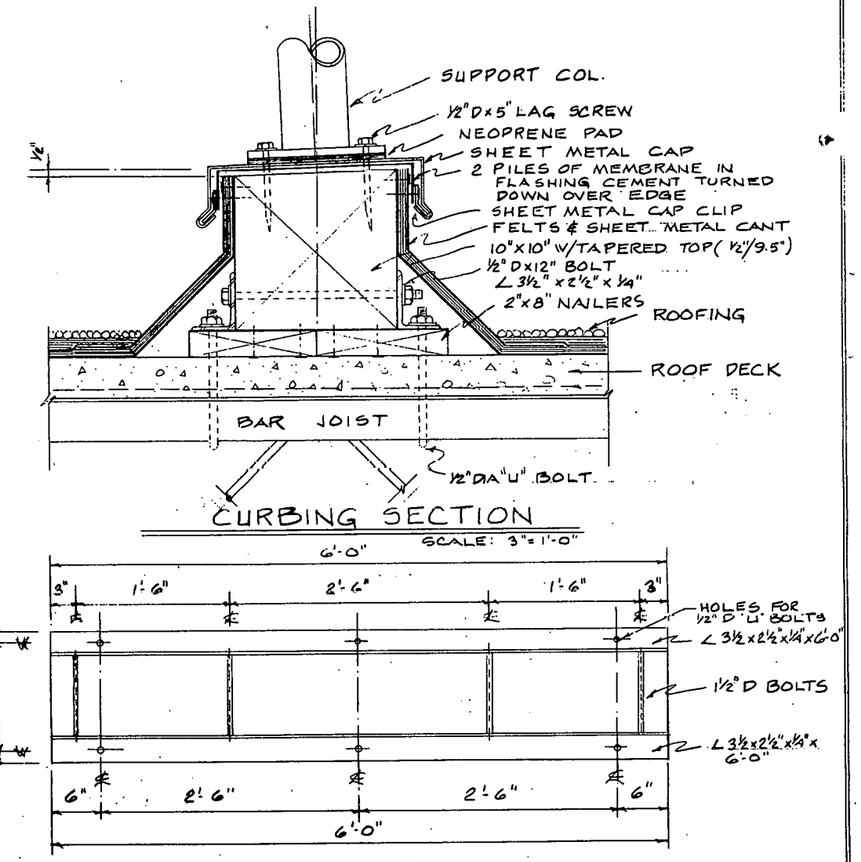

CURBING SECTION

SCALE: 3" = 1'-0"

CURBING PLAN

SCALE: 1" = 1'-0"

EQUIPMENT SUPPORT CURBING

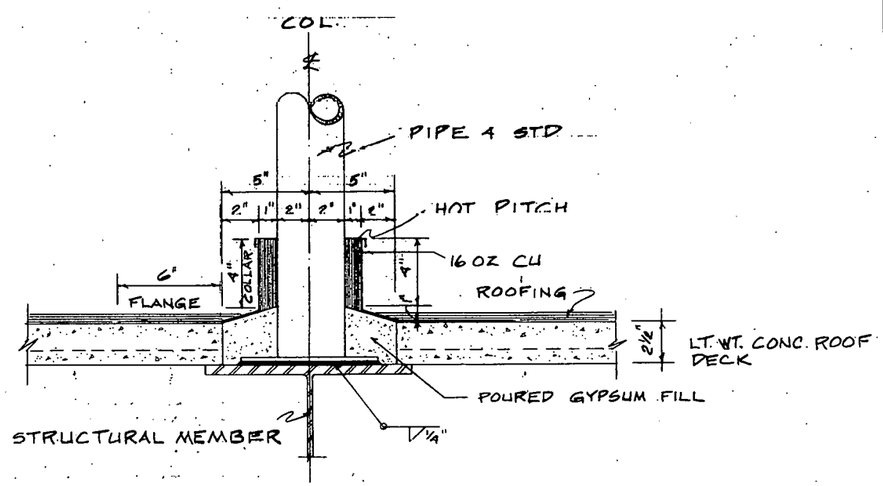

PITCH POCKET

SCALE: 3" = 1'-0"

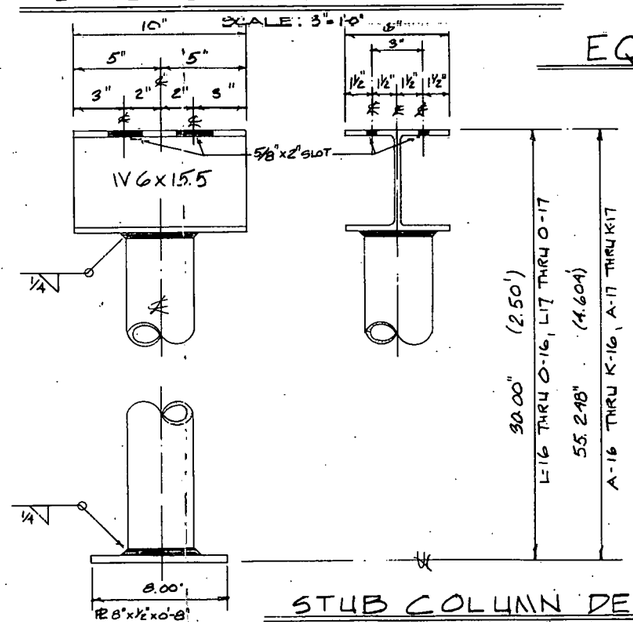

STUB COLUMN DETAILS

SCALE: 3" = 1'-0"

COLM ENGINEERING
CONSULTING ENGINEERS
POST OFFICE BOX 208
AUDUBON, NEW JERSEY 08106

CHERRY HILL INN
TWP. OF CHERRY HILL, CAMDEN CO., N.J.

SOLAR PANELS SUPPORT SYSTEM & LAYOUT

WILLIAM F. GARIANO
ARCHITECT-ENGINEER-PLANNER
3509 Lewis Road-Newtown Square
Pennsylvania-19073

CN-
Date 1/18/78
Scale AS NOTED
Revised

SHEET 6 OF-

WILLIAM F. GARIANO P.E.
N.J. LIC. NO. 15031
DATE: 1/18/78

DATE	SYM	REVISION RECORD	AUTH	PR	CK
2/15/78	A	NOZZLE QUANTITY			

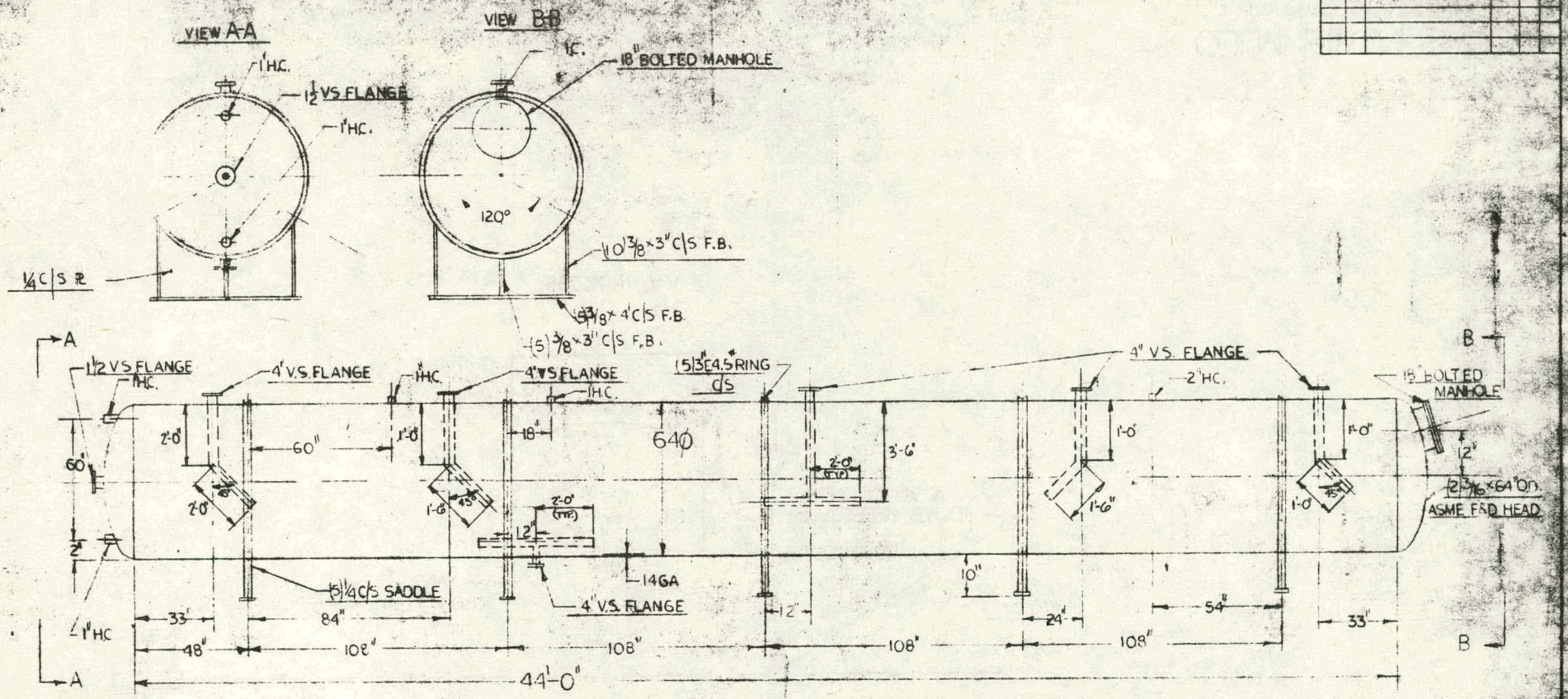

NOTES

1. MATERIAL S/S T-304, UNLESS STATED OTHERWISE
2. C/S PARTS TO BE PAINTED 1 COAT RED OXIDE PRIMER

8½ x 11

TOLERANCES (EXCEPT AS NOTED)	CHUCK GURDIN, inc. Brooklyn, N.Y.		
DECIMAL ± N.A.	CUSTOMER P.O. # 9283	SCALE 3/8" = 1'-0"	DRAWN BY A. WECHTER; APPROVED BY NEUFORT
FRACTIONAL ± 1/8"	TITLE 7500 GAL. HORIZONTAL HOLDING TANK		
ANGULAR ± 1/2°	DATE 2.15.78	DRAWING NUMBER C7802-1825	

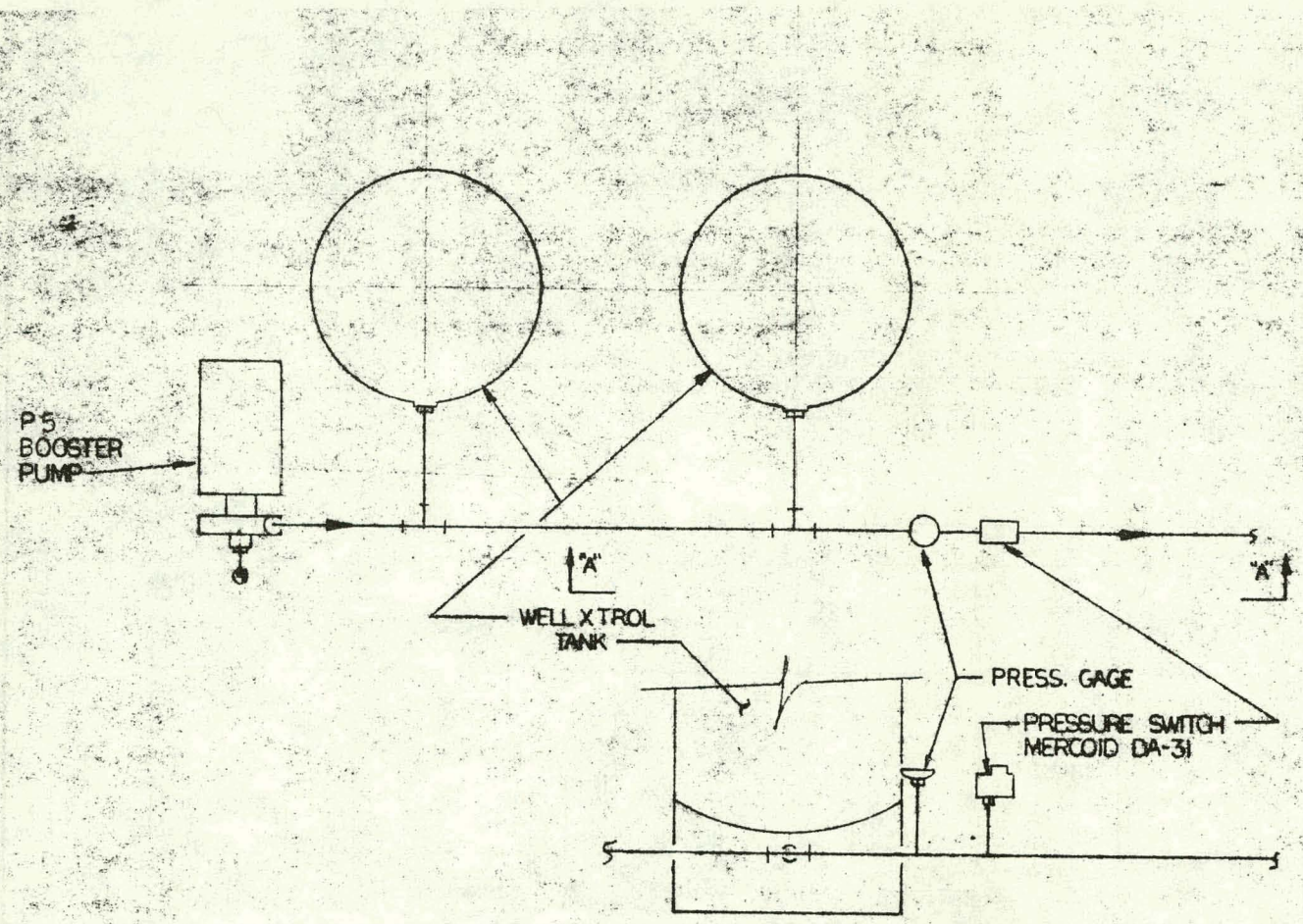

SECTION "A-A"

COLM ENGINEERING

NOTES

1. ALL PIPING AND INSTALLATION SHALL CONFORM TO THE NATIONAL PLUMBING CODE.
2. VALVE INFORMATION IS ON MASTER VALVE LIST.
3. ALL SOLDER JOINTS SHALL BE 15% SILVER SOLDER.

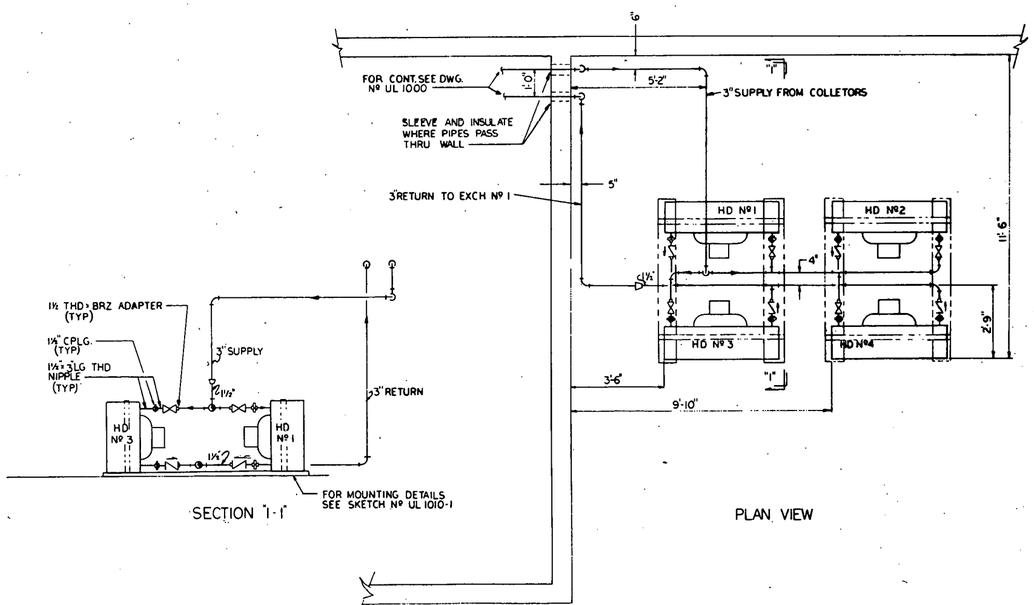

SECTION "1-1"

PLAN VIEW

COLM ENGINEERING
CONSULTING ENGINEERS
BARCLAY PAVILION
CHERRY HILL, NEW JERSEY 08034

HEAT DUMP ARRANGEMENT

DRAWN BY GLL	CHECKED BY H. COLM	SCALE 1/2 = 1'-0"
HOWARD COLM P.E. LIC. No. 12973 6-1-78		DRAWING No. UL-1001

212

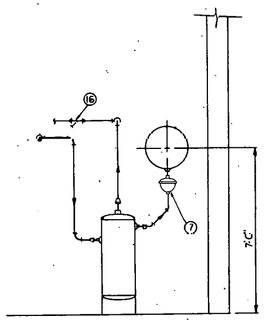

SECTION "1-1"

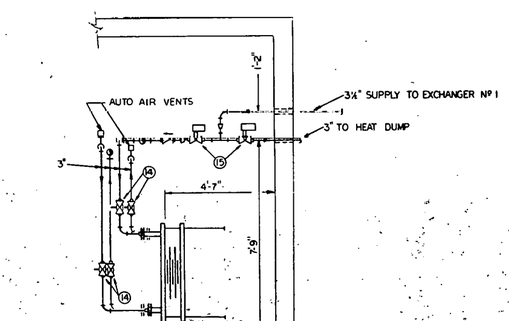

SECTION "2-2"

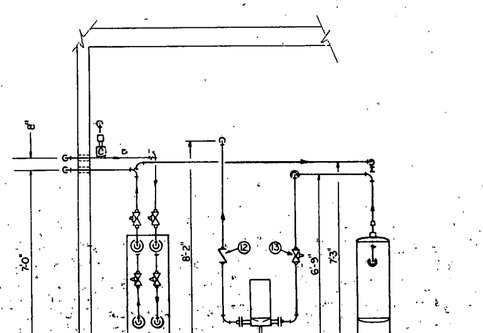

SECTION "3-3"

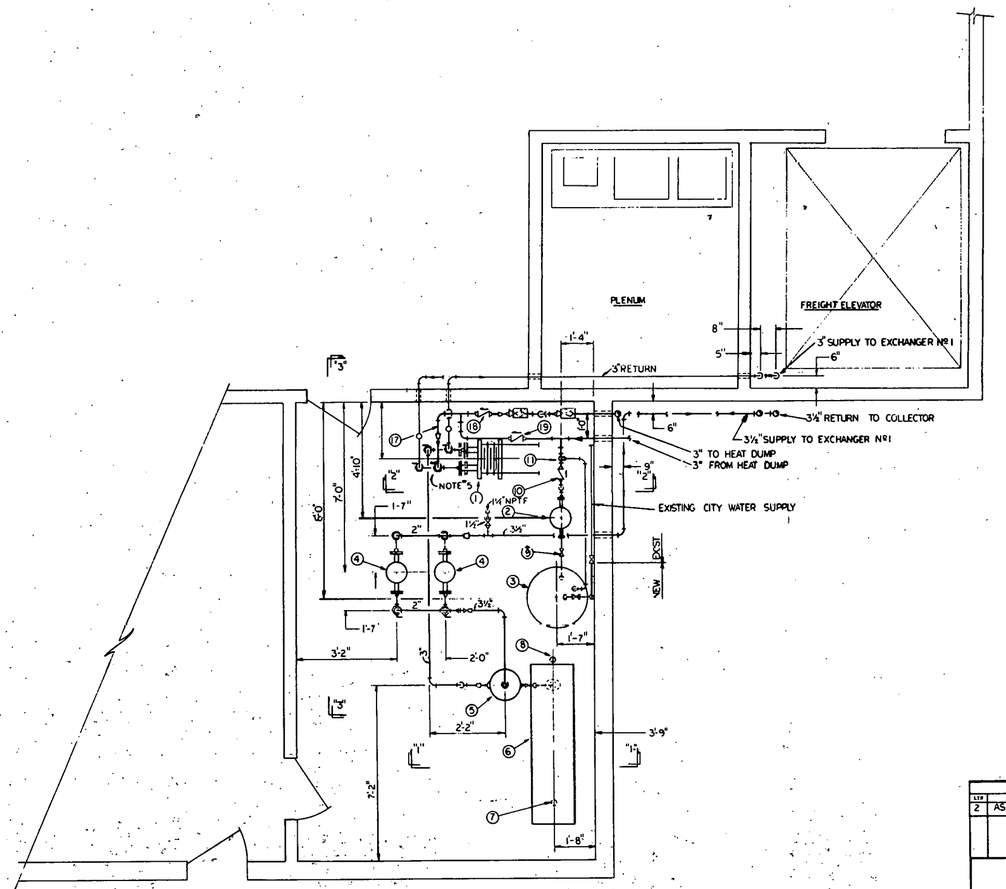

PLAN VIEW

NOTES

1. ALL PIPING AND INSTALLATION SHALL CONFORM TO NATIONAL PLUMBING CODE.
2. VALVE INFORMATION IS ON MASTER VALVE LIST.
3. ALL SOLDER JOINTS SHALL BE 15% SILVER SOLDER EXCEPT 3" SUPPLY AND 3" RETURN LINES TO EXCH. NO. 1 FROM LOWER MECH AREA WHICH SHALL BE 95-5 TIN ANTIMONY ALLOY.
4. ALL LINES TO BE INSULATATED WITH 1½" THK. INSULATION EXCEPT 3" SUPPLY AND RETURN LINES TO HEAT DUMP.
5. THERMO-WELLS TO BE INSTALLED IN ALL (4) 3" LINES ON HEAT EXCH

REVISIONS			
LTR	DESCRIPTION	DATE	APPROVED
2	AS BUILT	8-3-78	

COLM ENGINEERING
CONSULTING ENGINEERS
BARCLAY PAVILION
CHERRY HILL, NEW JERSEY 08034

UPPER LEVEL
MECHANICAL ROOM

DRAWN BY GLL 5 1878	CHECKED BY H.COLM	SCALE ½" 1'-0"	
HOWARD COLM P.E. LIC. No. 12973		DRAWING No. UL-1000	REV 2

213

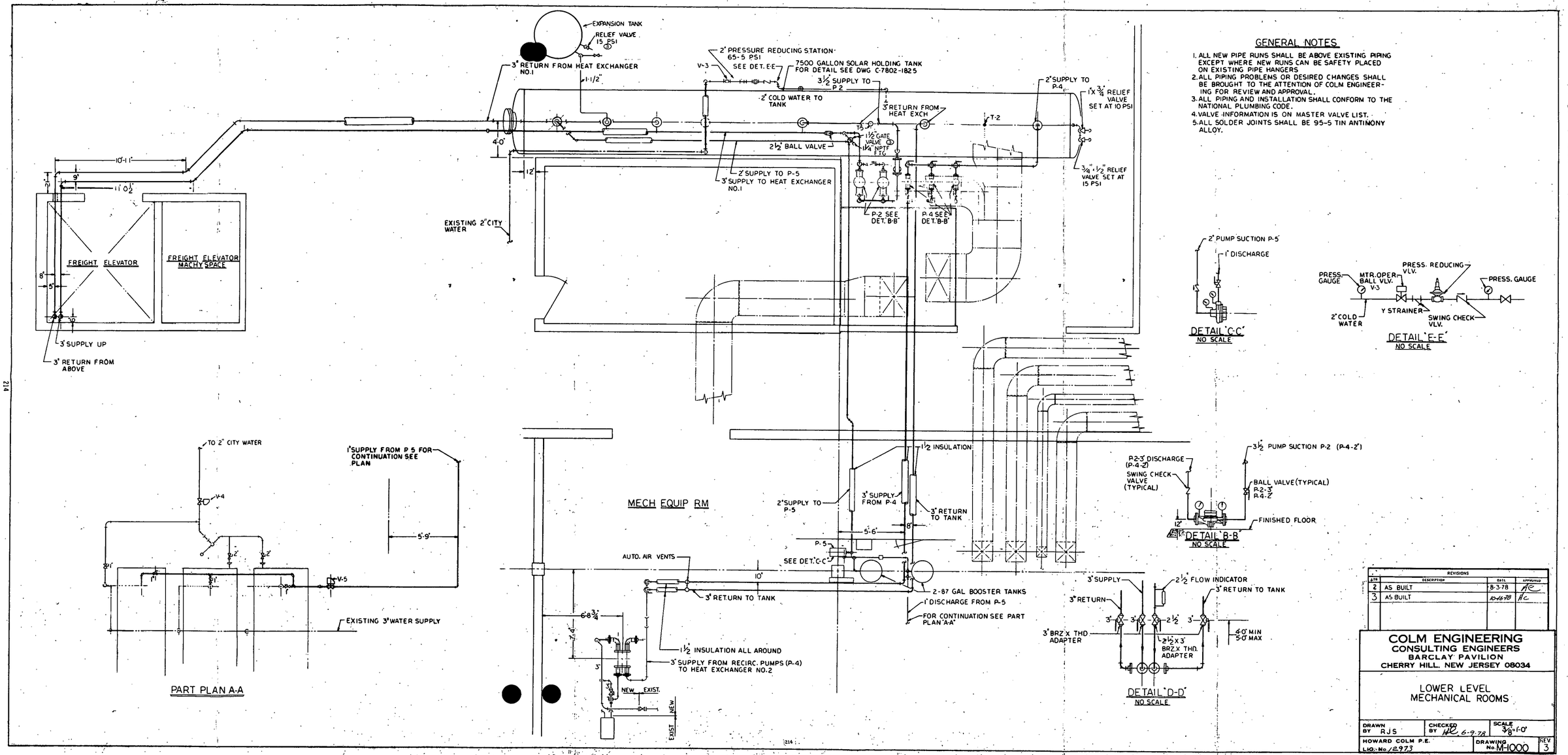

GENERAL NOTES

1. ALL NEW PIPE RUNS SHALL BE ABOVE EXISTING PIPING EXCEPT WHERE NEW RUNS CAN BE SAFETY PLACED ON EXISTING PIPE HANGERS
2. ALL PIPING PROBLEMS OR DESIRED CHANGES SHALL BE BROUGHT TO THE ATTENTION OF COLM ENGINEERING FOR REVIEW AND APPROVAL.
3. ALL PIPING AND INSTALLATION SHALL CONFORM TO THE NATIONAL PLUMBING CODE.
4. VALVE INFORMATION IS ON MASTER VALVE LIST.
5. ALL SOLDER JOINTS SHALL BE 95-5 TIN ANTIMONY ALLOY.

REVISIONS			
LTR	DESCRIPTION	DATE	APPROVED
2	AS BUILT	8-3-78	HC
3	AS BUILT	10-16-78	HC

COLM ENGINEERING
CONSULTING ENGINEERS
BARCLAY PAVILION
CHERRY HILL, NEW JERSEY 08034

LOWER LEVEL
MECHANICAL ROOMS

DRAWN BY RJS	CHECKED BY HC 6-9-78	SCALE 3/8"=1'-0"
HOWARD COLM P.E.		DRAWING No. M-1000
L.I.O. No. 12973		REV 3

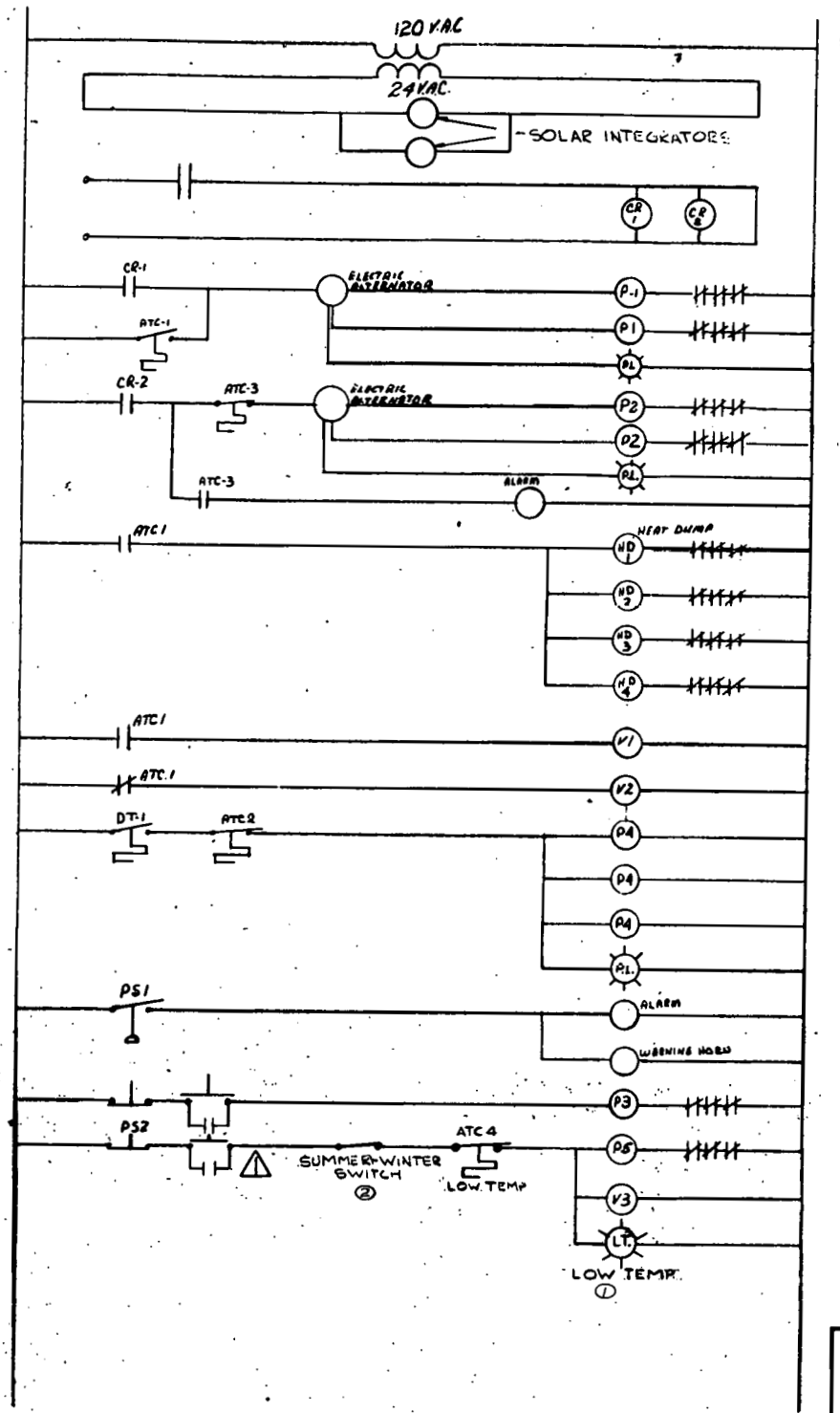

COLM ENGINEERING
CONSULTING ENGINEERS
BARCLAY PAVILION
CHERRY HILL, NEW JERSEY 08034

ELECTRICAL LINE DIAGRAM

DRAWN BY J.MORIE	CHECKED BY H.COLM 10/4/78	SCALE
HOWARD COLM P.E. LIC. No. 12973	DRAWING No. F-1000	2

NOTE:

1. CHERRY HILL INN SHALL PROVIDE THE FOLLOWING ITEMS: ALL PIPE, TUBE, EXPANSION JOINTS, WITH CONTROLS RODS (10), BALL VALVES (78), FLOW CONTROLS (2), RELIEF VALVES (2). THE CONTRACTOR SHALL PROVIDE ALL OTHER MATERIALS REQUIRED AND SHALL NOTIFY COLM ENGINEERING OF ANY DISCREPANCY OR DESIRED CHANGE. BASIC BILL OF MATERIAL ATTACHED
2. ② ANCHORS, GUIDES AND SUPPORTS TO BE INSTALLED IN THE FIELD AS REQD.

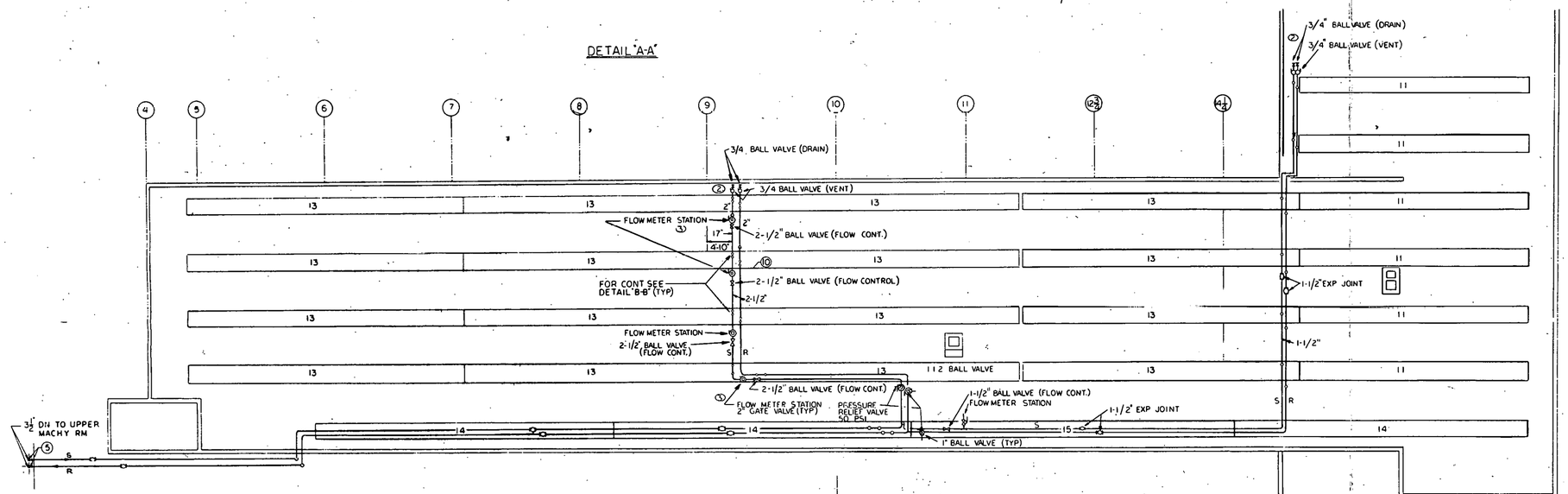

PLAN VIEW

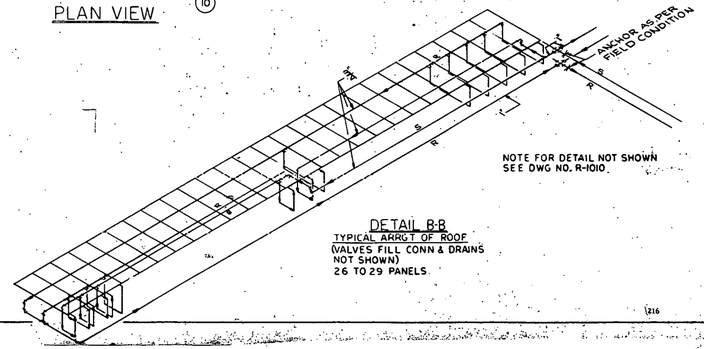

NOTE FOR DETAIL NOT SHOWN SEE DWG NO. R-1010.

DETAIL B-B
TYPICAL ARRGT OF ROOF
(VALVES FILL CONN & DRAINS NOT SHOWN)
26 TO 29 PANELS.

COLM ENGINEERING
CONSULTING ENGINEERS
BARCLAY PAVILION
CHERRY HILL, NEW JERSEY 08034

SOLAR PANEL MANIFOLD ASSEMBLY

DRAWN BY R.J.S.	CHECKED BY H.C.	SCALE 1/8"=1'-0" 4-16-78
HOWARD COLM P.E. LIC. No. 12973		DRAWING No. R-1000 3.

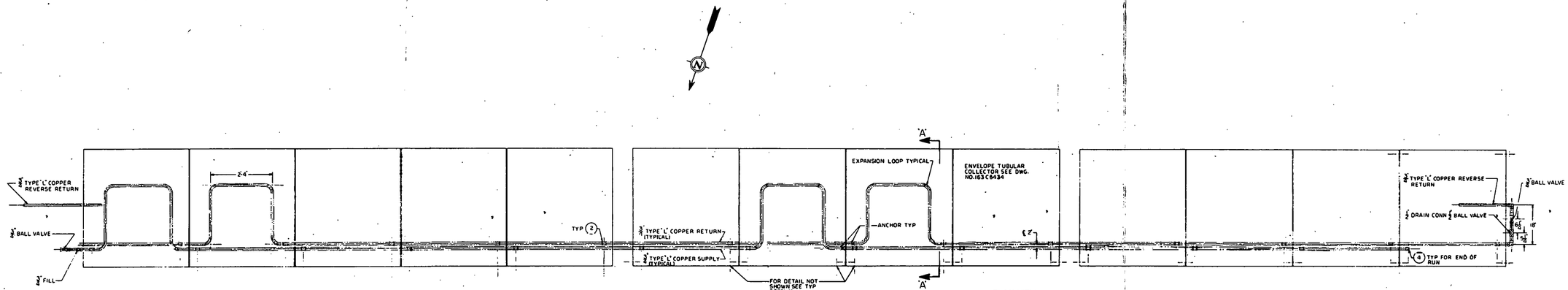

PLAN VIEW
13 TYPICAL COLLECTOR
SCALE: 1" = 1'-0"

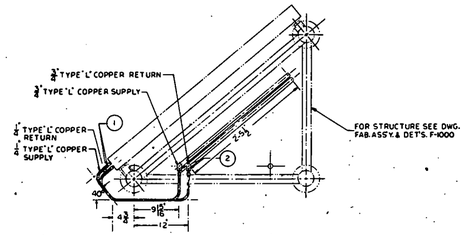

TYPICAL DETAIL A-A
SCALE: 1½" = 1'-0"

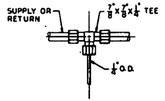

TYPICAL DETAIL "B-B"
FOR DETAIL NOT SHOWN SEE DETAIL A-A
NO SCALE

NOTE:
ANCHORS AND GUIDES TO BE INSTALLED IN FIELD AS REQD.

COLM ENGINEERING CONSULTING ENGINEERS BARCLAY PAVILION CHERRY HILL, NEW JERSEY 08034		
ROOF ASSEMBLY DETAILS		
DRAWN BY RJS	CHECKED BY	SCALE AS NOTED
HOWARD COLM REG. No. 12973		DRAWING No. R-4010

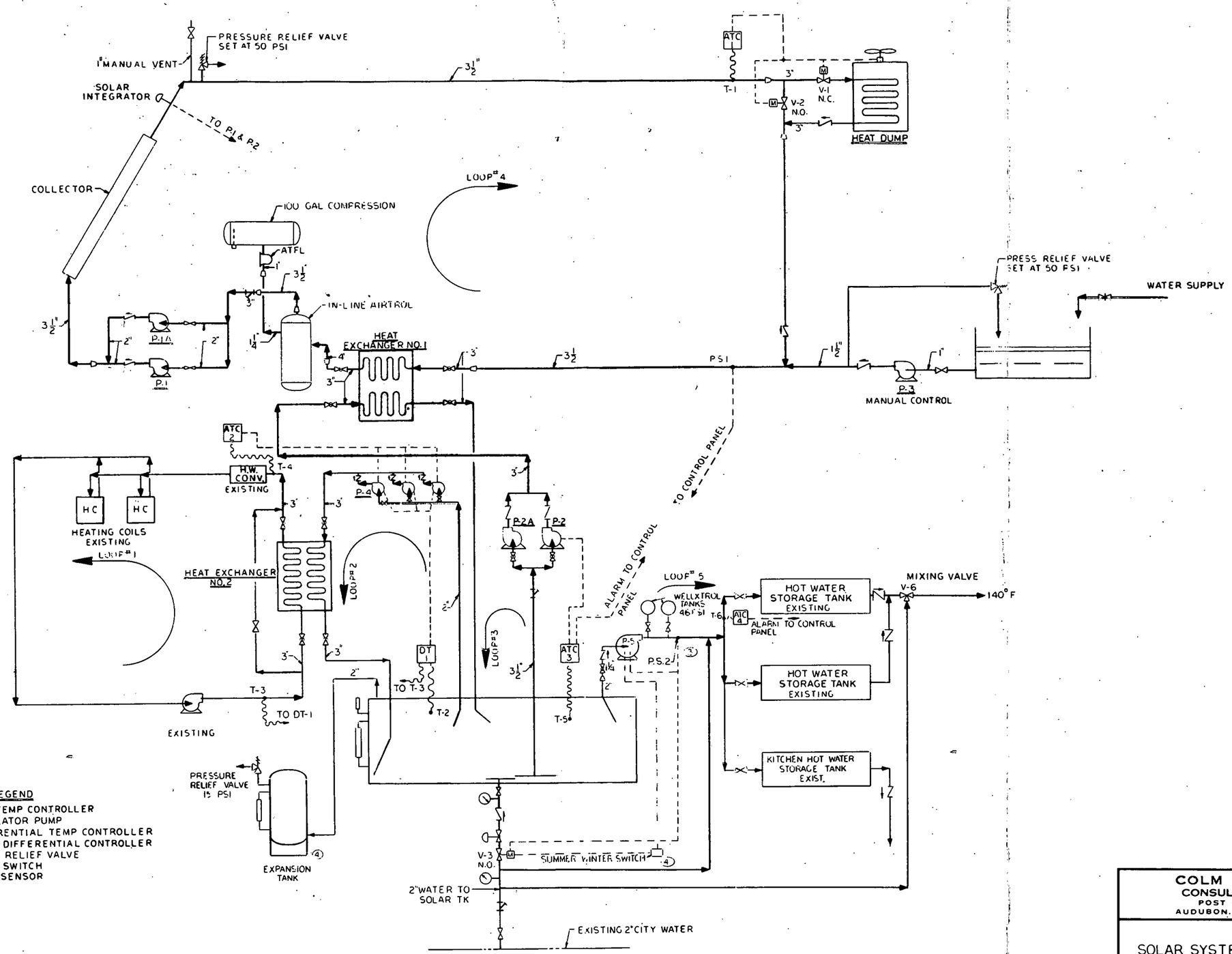

LEGEND

ATC	AUTO TEMP CONTROLLER
C P	CIRCULATOR PUMP
D T	DIFFERENTIAL TEMP CONTROLLER
PDC	PRESS DIFFERENTIAL CONTROLLER
PRV	PRESS RELIEF VALVE
PS	PRESS SWITCH
T	TEMP SENSOR

COLM ENGINEERING
CONSULTING ENGINEERS
POST OFFICE BOX 208
AUDUBON, NEW JERSEY 08106

SOLAR SYSTEM SCHEMATIC

RJS	SCALE NONE	HC PE12973
1-21-78	20001-SK-1	REV. 4

APPENDIX "C"

PHOTOGRAPHS

Installation photographs are on the following pages

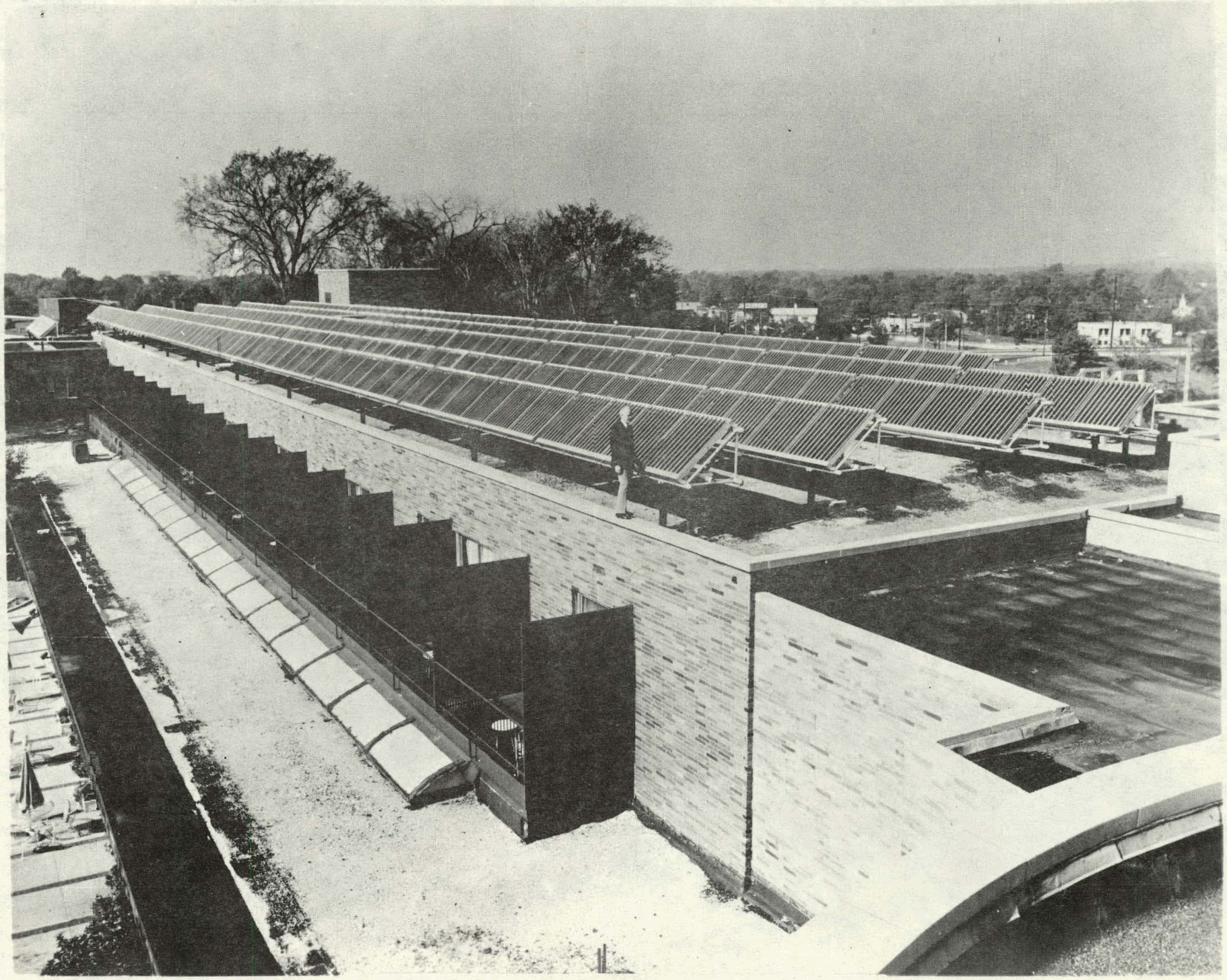

INSTALLATION COMPLETED

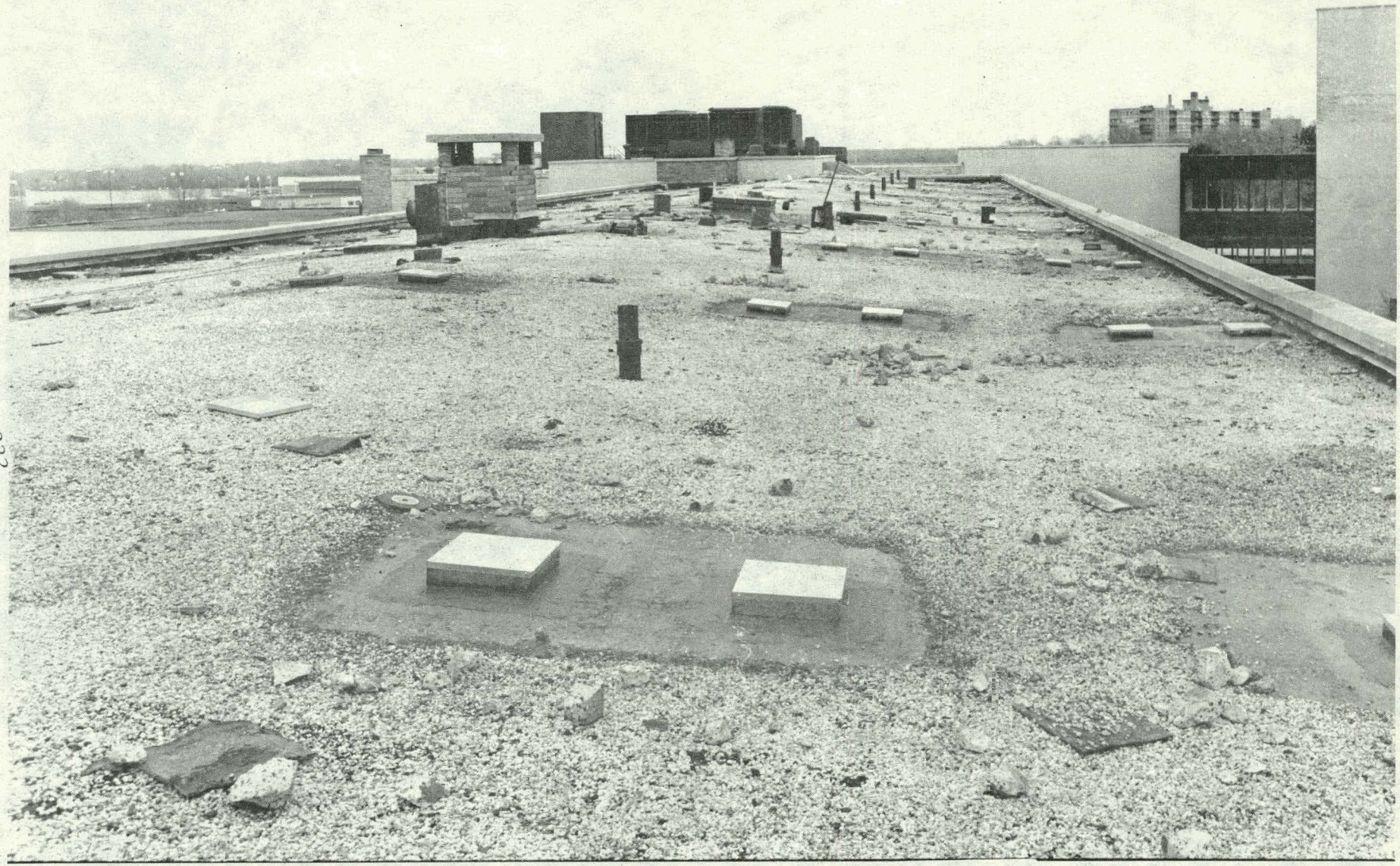

ROOF AREA AT AN EARLY PREPARATION STAGE

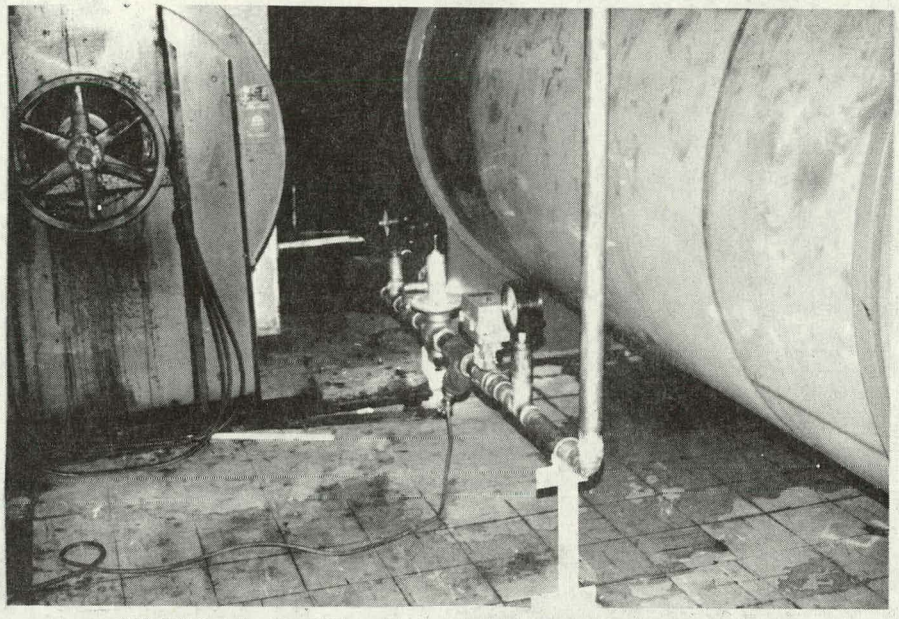

STORAGE TANK AND COLD WATER INLET

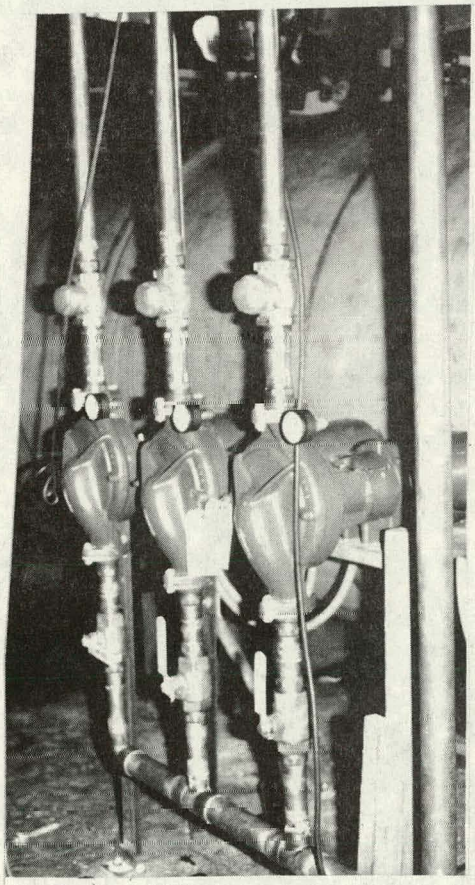

P-4 PUMPS

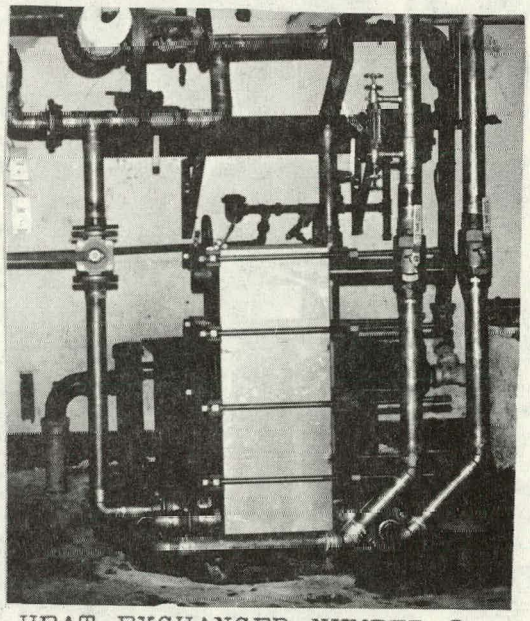

HEAT EXCHANGER NUMBER 2

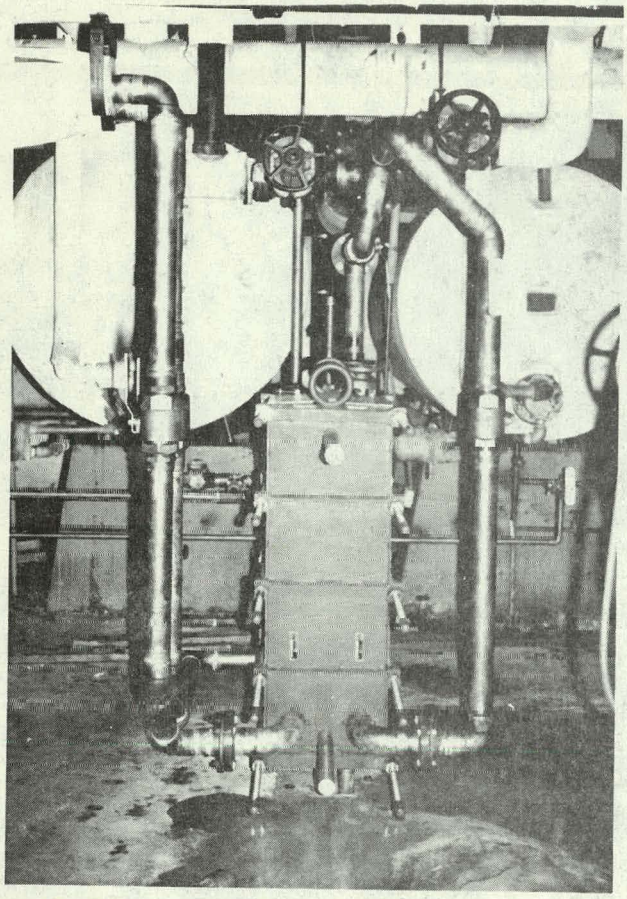

HEAT EXCHANGER NUMBER 1

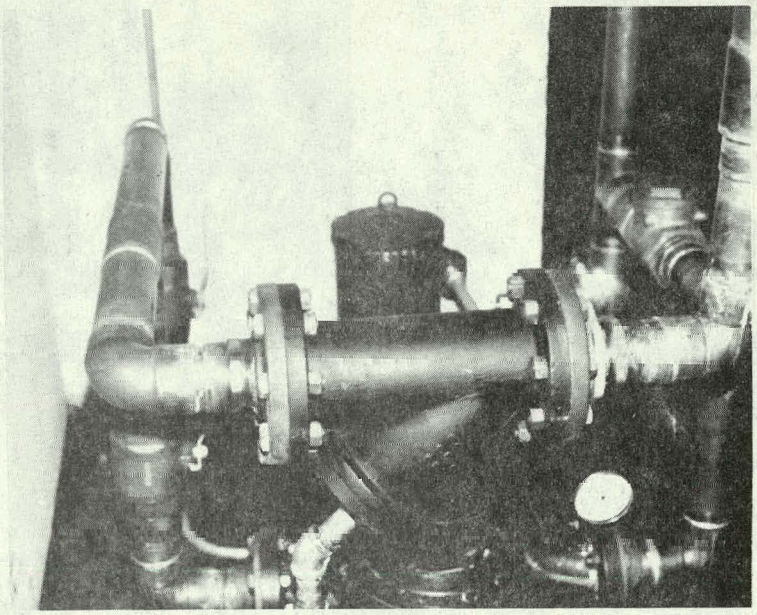

P- 2 PUMP AND STRAINER

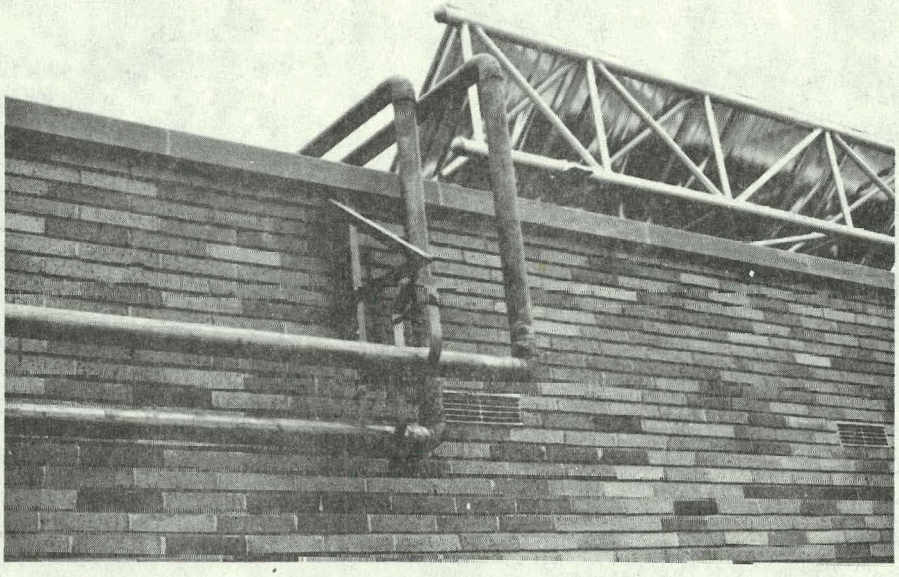

MAIN HEADER LINES

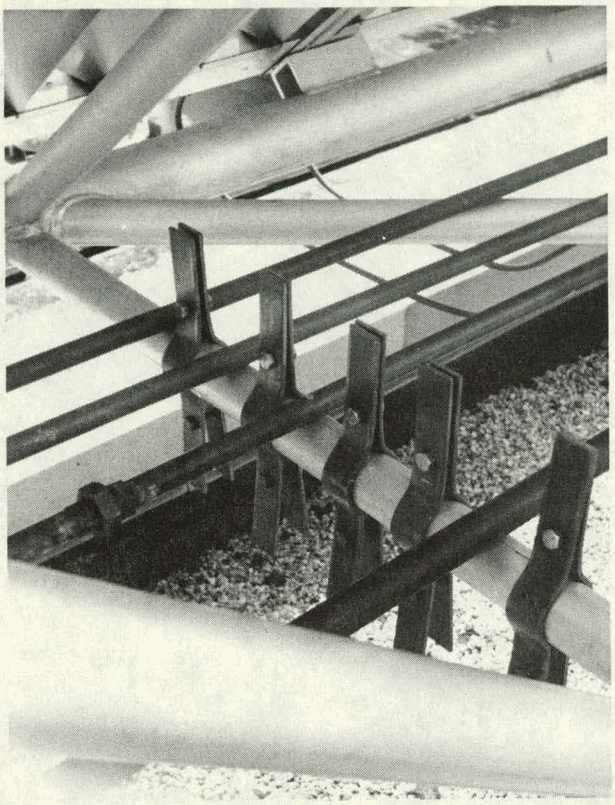

MANIFOLD GUIDES

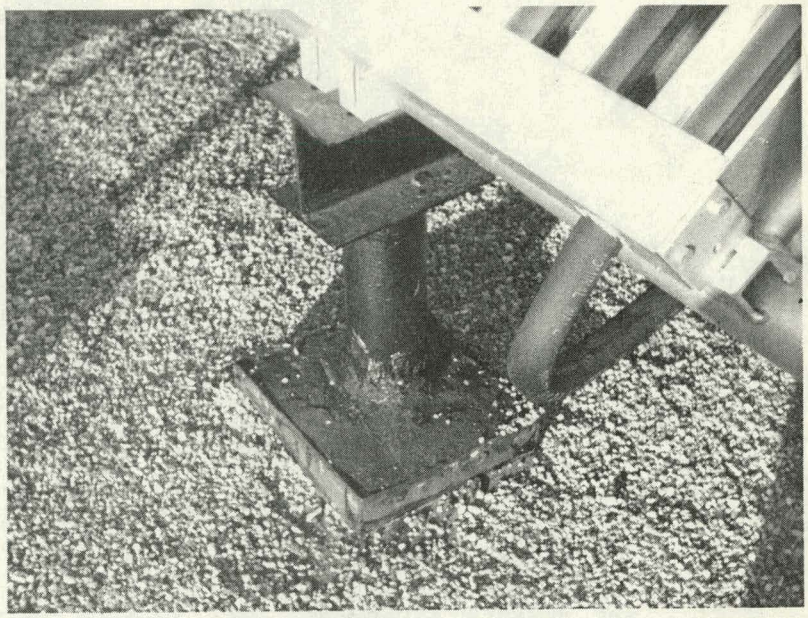

INSULATION PRIOR TO COATING

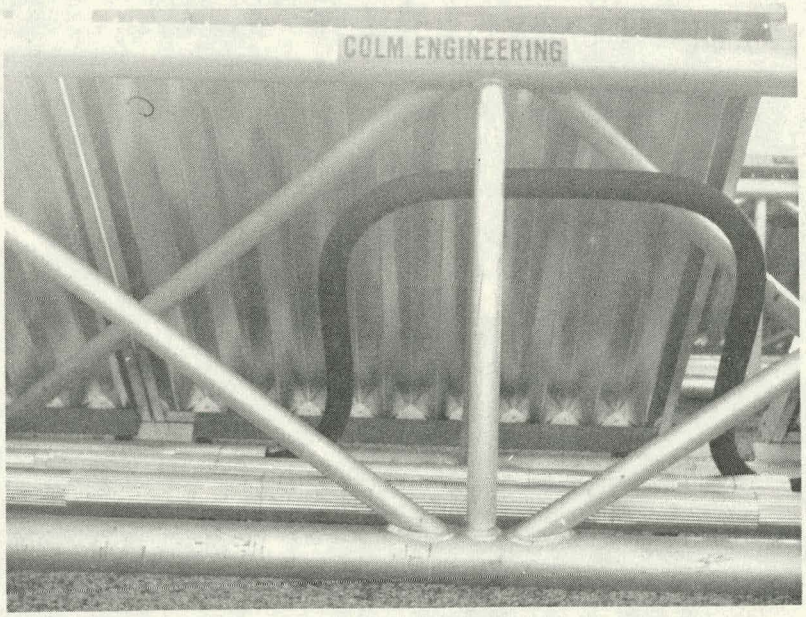

INSULATED MANIFOLD PRIOR TO COATING

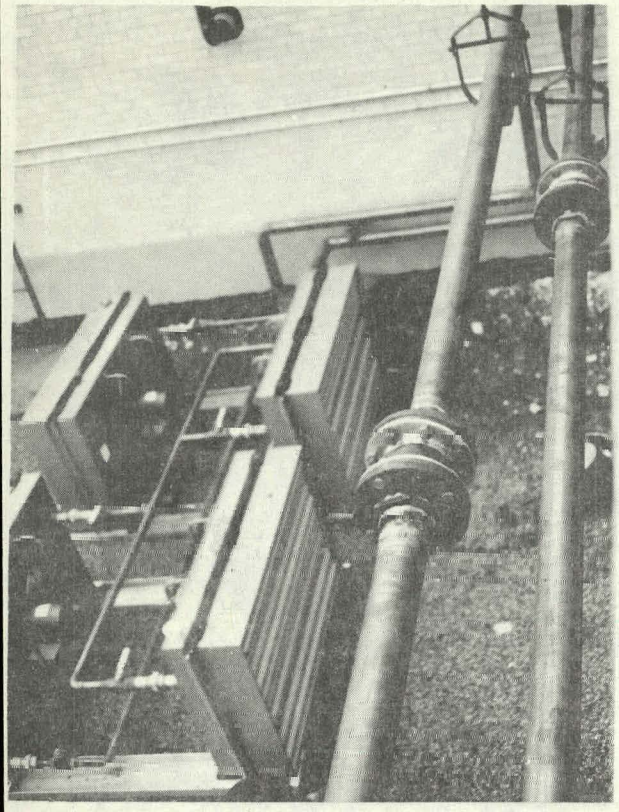

HEAT DUMP - AERIAL VIEW

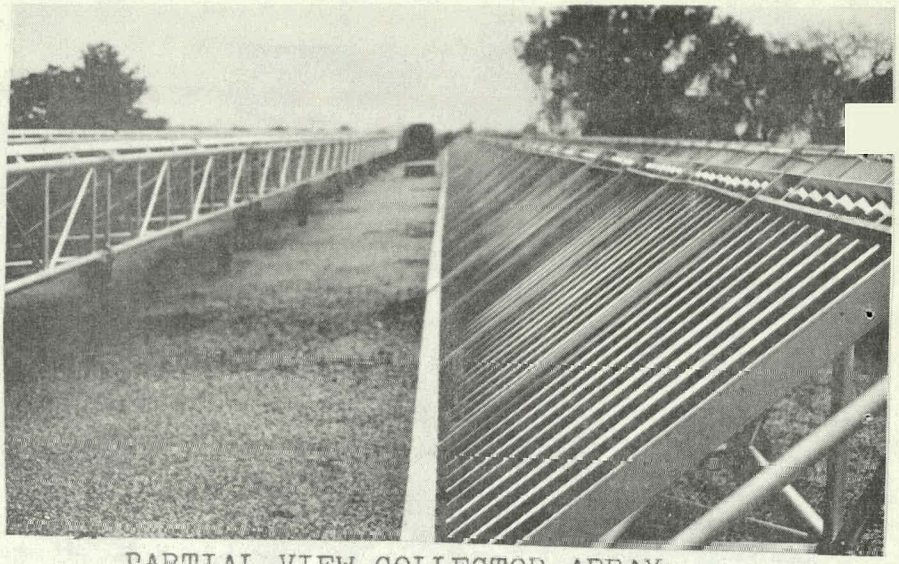

PARTIAL VIEW COLLECTOR ARRAY

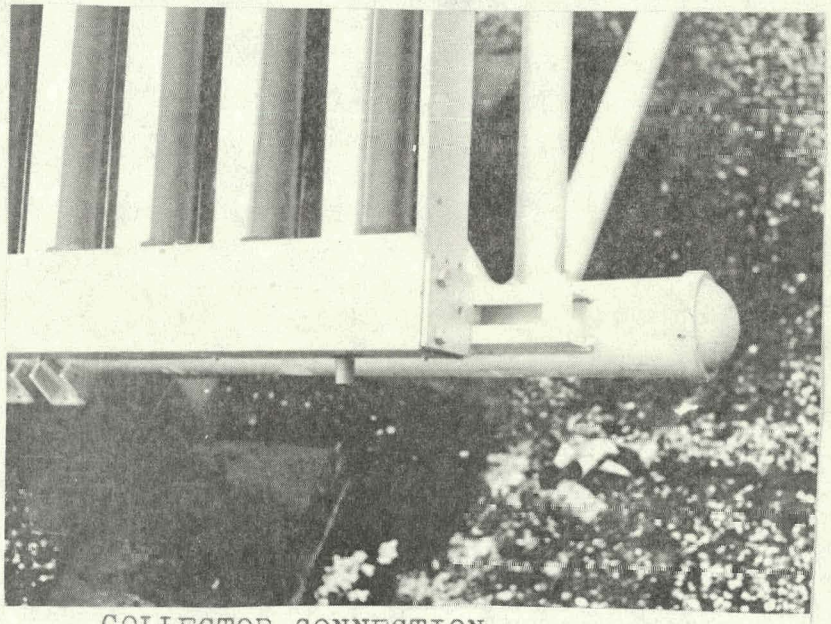

COLLECTOR CONNECTION

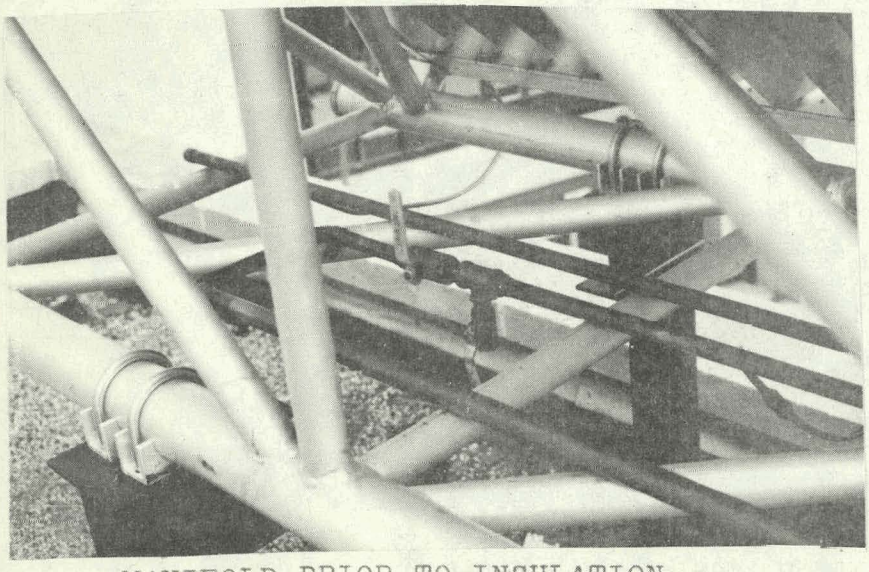

MANIFOLD PRIOR TO INSULATION