UCRL-52865

MEASUREMENTS AND CALCULATIONS OF WATER VELOCITY, MOMENTUM FLUX, AND RELATED FLOW PARAMETERS OBTAINED FROM SINGLE-PHASE WATER INTEGRAL ACCEPTANCE TESTS OF THE PKL INSTRUMENTED SPOOL PIECES

Werner Stein

MASTER

October 9, 1979

This work was supported by the U.S. Nuclear Regulatory Commission under Interagency Agreement DOE 40-550-75 with the U.S. Department of Energy.

LAWRENCE LIVERMORE LABORATORY
University of California/Livermore

DISTRIBUTION OF THIS DOCUMENT IS UNLIMITED

LAWRENCE LIVERMORE LABORATORY
University of California Livermore, California 94550

UCRL-52855

MEASUREMENTS AND CALCULATIONS OF WATER VELOCITY, MOMENTUM FLUX, AND RELATED FLOW PARAMETERS OBTAINED FROM SINGLE-PHASE WATER INTEGRAL ACCEPTANCE TESTS OF THE PKL INSTRUMENTED SPOOL PIECES

Werner Stein

Manuscript date: October 9, 1979

DISCLAIMER

This book was prepared as an account of work sponsored by an agency of the United States Government. Neither the United States Government nor any agency thereof, nor any of their employees makes any warranty, express or implied, or assumes any legal liability or responsibility for the accuracy, completeness, or usefulness of any information, apparatus, product, or process disclosed, or represents that its use would not infringe privately owned rights. Reference herein to any specific commercial product, process, or service by trade name, trademark, manufacturer, or otherwise, does not necessarily constitute or imply its endorsement, recommendation, or favoring by the United States Government or any agency thereof. The views and opinions of authors expressed herein do not necessarily state or reflect those of the United States Government or any agency thereof.

MASTER

DISTRIBUTION OF THIS DOCUMENT IS UNLIMITED

CONTENTS

Abstract v
Introduction 1
PKL Spool Piece Design and Instrumentation. 3
Spool Piece Physical Description 3
Spool Piece Instrumentation 3
Turbine Flowmeter 3
Drag Screen System 4
Absolute and Differential Pressure Measurements 4
Wall, Fluid, and Steam Temperature Measurements 4
Densitometer System 4
PKL Spool Piece Data Acquisition System 7
System Description 7
Software 7
Analytical Relationships 7
Engineering Unit Conversions. 8
Flow Parameter Calculations 9
PKL Water-Flow Test Facility 15
PKL Acceptance Tests 17
Test Descriptions. 17
Orifice-Meter Results. 19
Spool Test Results 20
Summary and Conclusions 23
References. 25
Appendix A PKL Spool Piece Drawings (EG&G Drawing Nos. 137086, 137087, and 137088) 27
Appendix B PKL Spool Piece Test Results Data. 37

LIST OF ILLUSTRATION

1. PKL water-flow test facility schematic 16

LIST OF TABLES

1. Densitometer statistical error analysis 6
2. PKL test facility orifice-meter test results 18
3. PKL spool piece water-flow test results 21

ABSTRACT

The operation of the emergency core cooling system and its related steam-binding problems in pressurized water reactors is the subject of a cooperative study by the United States, Germany, and Japan. Lawrence Livermore Laboratory and EG&G, Inc., San Ramon Operations, are responsible for the design, hardware, and software of the 80.8-mm and 113-mm spool piece measurement systems for the German Primarkreislauf (PKL) Test Facility at Kraftwerk Union in Erlangen, West Germany. This work was done for the U. S. Nuclear Regulatory Commission, Division of Reactor Safety Research, under its 3-D Technical Support and Instrumentation Program.

Four instrumented spools capable of measuring individual phase parameters in two-phase flows were constructed. Each spool contains a flow turbine, drag screen, three-beam densitometer, and pressure and temperature probes. A computerized data acquisition system is also provided to store and analyze data from the four spools.

The four spools were shipped to the PKL Test Facility in West Germany for acceptance testing in a water-flow loop. Spool measurements of velocity and momentum flux were compared to the values obtained from an orifice meter installed in the loop piping system.

The turbine flowmeter velocity data for all tests were within allowable tolerances. Drag screen momentum flux measurements were also within tolerance with the exception of a few points.

INTRODUCTION

The operation of the emergency core cooling system (ECCS) and its related steam-binding problems in pressurized water reactors (PWR's) is the subject of a co-operative German, Japanese, and United States steam-binding study. The German Primarkreislauf (PKL) Test Facility at Kraftwerk Union (KWU) in Erlangen, West Germany, was constructed to perform loss-of-coolant experiment (LOCE) reflood tests. In order to measure fluid flows during these reflood tests, a spool piece measurement system* was developed to measure both single-phase and two-phase water and steam flows in the various coolant loop legs of the PKL reactor. Lawrence Livermore Laboratory (LLL) and EG&G, Inc., San Ramon Operations, developed the spool piece measurement system for the U. S. Nuclear Regulatory Commission, Division of Reactor Safety Research (NRC-RSR) under its 3-D Technical Support and Instrumentation Program.

The spool piece measurement system basically consists of four spools and a computerized data acquisition system (DAS). Each spool piece contains a flow turbine, drag screen, three-beam densitometer, and pressure and temperature probes. The DAS is capable of receiving and storing data signals, converting data to engineering unit values, and calculating flow parameters in two-phase flow.

The contractual testing requirements for the spools call for prototype testing of the spools in single-phase water flow and in two-phase water-steam flows[1] and acceptance testing in single-phase water at the PKL Test Facility. The acceptance testing is the subject of this report.

The acceptance testing involved disassembling the spool pieces and related electronic equipment for packing and shipping to the PKL Test Facility in West Germany. The spools and related equipment were reassembled at the PKL Test Facility and checked for proper operation.

---

*In this report, the spool piece measurement system is also referred to as a spool piece or a spool.

Testing involved placing the individual pipe spools in the PKL water-flow loop and then flowing water through the spool at low, nominal, and high flow rates. Comparisons of spool-determined velocities and momentum fluxes were made with velocities and momentum fluxes obtained from an orifice-meter instrumentation system installed on the PKL water-flow loop.

PKL SPOOL PIECE DESIGN AND INSTRUMENTATION

SPOOL PIECE PHYSICAL DESCRIPTION

A total of four spool piece measurement systems were tested at the PKL Test Facility. Each spool consists of a flanged pipe that is 830 mm long. Three of the spools have an inside diameter of 80.8 mm, and one spool has an inside diameter of 113 mm. The spools are designed for horizontal installation except for one of the 80.8-mm spools which is designed for vertical installation.

Each spool contains the following instruments:

- Three-beam densitometer.
- Full-diameter flow turbine.
- Full-diameter drag screen or plate.
- Wall temperature probe.
- Fluid temperature probe.
- Superheated-steam temperature probe (vertical spool only).
- Absolute pressure probe.
- Differential pressure probe across the drag screen.

The pertinent physical details for each of the spools are given in EG&G drawing nos. 137086, 137087, and 137088 (refer to Appendix A).

SPOOL PIECE INSTRUMENTATION

A description of the instrumentation used on the spool pieces is given below. For each system, accuracy of 1% of full scale is required, and a response time of 350 ms is required for a 10 to 90% response due to a step excitation.

Turbine Flowmeter

A whole-duct, bidirectional turbine flowmeter is used to measure volumetric flow in the spool piece. Passage of fluid through the instrument causes the nine-bladed rotor to turn at a rate proportional to the flow rate of the fluid. The

rotation of the rotor is sensed by two magnetic pickup devices, and the direction of rotation is determined by the phase shift between these two devices. The flowmeter consists of the rotor, stainless-steel ball bearings, and flow straighteners attached to both ends of a stationary shaft. The range of operation is from 2 to 60 m/s in steam-flow conditions.

Drag Screen System

A full pipe drag screen or plate is used to measure momentum flux in the spool piece. The drag screen is held in place by a three-pin suspension system. Screen deflections, under flow conditions, are sensed by three variable reluctance transducers. The sum of the three outputs is proportional to the momentum flux. The range of operation is from 70 to 7,200 $kg/m\text{-}s^2$.

Absolute and Differential Pressure Measurements

The fluid differential pressure is measured across the drag screen, and the absolute pressure is measured upstream of the drag screen. Both measurements are made using water-cooled, water-filled standoff tubes connecting the transducers to the spool piece. The absolute pressure transducer has a range of operation from 0 to 700 kPa. The differential pressure transducer has a range of operation from 0 to 7 kPa.

Wall, Fluid, and Steam Temperature Measurements

Probes consisting of chromel-alumel thermocouples and an ice-bath reference are used to measure the wall, fluid, and superheated-steam temperatures in the spool piece.

Densitometer System

The density of single-phase and two-phase flow is measured by a three-beam, low-energy (6-22 keV) X-ray densitometer. The chordal average density is determined by the amount of attenuation of the radiation beam by the fluid in the spool. The densitometer contains a single silicon-lithium-drifted, low-energy

photon detector collimated to three sources through the beryllium window of the spool piece. The radiation sources are Iron-55, Cadmium-109, and Americium-241. The range of measurement is from 0.7 to 1,000 kg/m^3. A densitometer statistical error analysis[2] is given in Table 1.

TABLE 1. Densitometer statistical error analysis.[2]

Density, kg/m^3	Required % error* of reading			% error prototype test: 80.8-mm horizontal Fe^{55}	Cd^{109}	Am^{241}	80.3-mm vertical Fe^{55}	Cd^{109}	Am^{241}	113-mm Fe^{55}	Cd^{109}	Am^{241}
0.7	100.0			18.9	172.0	237.0	21.0	172.0	212.0	20.1	106.0	255.0
1.5	46.7			9.2	81.6	111.0	10.2	81.6	99.0	10.0	49.6	119.0
2	35.0			7.1	61.3	83.3	7.8	61.3	74.5	7.8	37.3	90.0
3	23.3			5.0	41.0	55.6	5.5	41.0	49.7	5.6	24.9	60.0
5	14.0			3.3	24.7	33.5	3.7	24.7	30.0	4.9	15.1	36.2
10	7.0			2.2	12.5	17.0	2.4	12.5	15.2	3.9	7.7	18.4
30	2.3			2.1	4.4	5.9	2.3	4.4	5.3	4.0	2.7	6.6
50	1.4			3.7	2.8	3.7	4.1	2.8	3.3	10.3	1.8	4.2
70	1.0	14.3	(143)	**	2.1	2.8	**	2.1	2.5	**	1.4	3.2
100		10.0	(100)		1.6	2.1		1.6	1.9		1.1	2.5
500		2.0	(20)		0.9	1.1		0.9	1.0		0.9	2.0
1000		1.0	(10)		1.6	1.8		1.6	1.6		2.6	5.7

*Required by PKL Functional Specification (MPR Associates, Inc., 1978); (a) 1% of full scale, 0.7 to 70 kg/m^3; (b) 1% of full scale, 70 to 1,000 kg/m^3 (10% of full scale acceptable).

**Compton effect (see Nuclear Science, vol. ns. 19, no. 3, June 1972).

PKL SPOOL PIECE DATA ACQUISITION SYSTEM

SYSTEM DESCRIPTION

The computer system used to monitor and control spool piece testing is an LSI-11 microprocessor system with 32,000 words of memory. The peripherals include the following:

- Line printer.
- CRT terminal (TTY).
- Cartridge tape recorder/reproducer.
- Analog-to-digital converter and multiplexer.
- Three floppy-disc drives.

SOFTWARE

Computer programs were developed to allow the acquisition of 50 data channels and to provide the capabilities for:

- Data acquisition and storage on cartridge tape.
- Data retrieval from tape and analysis of the data.
- Real-time acquisition and analysis of the data.

The analysis of the data consists of converting the data signals to engineering units. This is accomplished primarily by a calibration-table, look-up scheme with straight-line interpolation between the points. After conversion of the data to engineering units, calculations are made to determine the two-phase flow parameters.

ANALYTICAL RELATIONSHIPS

A major portion of the calculations involves converting the data signals into engineering units, and then using these engineering unit values to determine the phase velocities, mass flow rate, and void fraction.

Engineering Unit Conversions

Data signals, received from the following channels, are first converted to voltage values, which are then used to determine the appropriate engineering unit values from available calibration tables:

- Wall temperature (^{o}C).
- Fluid temperature (^{o}C).
- Steam temperature (^{o}C).
- Fluid absolute pressure (kPa).
- Differential pressure (kPa).
- Flow turbine velocity (m/s).
- Individual drag screen transducer force (N).

To determine velocity from the flow turbine, two calibration tables are available. One table is based on a water calibration and the other on an air calibration.

To determine momentum flux from the drag screen, calibration tables relating total force to momentum flux are available. The total force is determined by algebraically summing the force values from the three drag transducers. If one of the drag transducers is over-range, an alternate calculation for total force is obtained from the differential pressure transducer signal.

The density along each of the three beam paths is obtained from the voltage signal. The voltage signal is given by the following relationship:[3]

$$V = V_{off} + De^{-C\rho} \qquad (1)$$

where

V = voltage signal

V_{off} = offset voltage in system

D = calibration constant proportional to the radiation source intensity

C = attenuation calibration constant

ρ = average density along beam path.

Engineering unit values for density along each beam are obtained by inverting equation (1) to give:

$$\rho = \frac{1}{C} \ln \frac{D}{V - V_{off}} \quad . \tag{2}$$

Flow Parameter Calculations

The individual phase parameters calculated include density, velocity, mass flow rate, void fraction, and average pipe cross-sectional density.

Density. The vapor density (ρ_S) and liquid density (ρ_W) are calculated from steam table routines with measured values of fluid temperature and pressure as input. The average cross-sectional density is calculated by fitting a density distribution model to the individual beam density measurements.[4]

Individual Phase Velocities[5] and Void Fraction. The average density of two-phase flow is given by:

$$\rho_f = \alpha\rho_S + (1 - \alpha)\rho_W \tag{3}$$

where

α = void fraction

ρ_S = steam density

ρ_W = water density.

The void fraction is given by solving equation (3):

$$\alpha = \frac{\rho_W - \rho_f}{\rho_W - \rho_S}$$

where

ρ_f = average density.

The mass flux (G_f) is given by:

$$G_f = \rho_f V_f = \alpha\rho_S V_S + (1 - \alpha)\rho_W V_W \tag{4}$$

where

V_f = average velocity.

Solving equation (4) for V_f gives:

$$V_f = \frac{G_f}{\rho_f} = \frac{\alpha\rho_S V_S + (1 - \alpha)\rho_W V_W}{\alpha\rho_S + (1 - \alpha)\rho_W} \quad . \tag{5}$$

The momentum flux (I) is measured from the drag screen and is given by:

$$I = \alpha\rho_S V_S^2 + (1 - \alpha)\rho_W^2 V_W \quad . \tag{6}$$

The turbine velocity (V_t) is calculated, based on the Rouhani model,[6] as:

$$V_t = \frac{I}{\rho_f V_f} = \frac{\alpha\rho_S V_S^2 + (1 - \alpha)\rho_W^2 V_W}{\alpha\rho_S V_S + (1 - \alpha)\rho_W V_W} \quad . \tag{7}$$

The drag screen and turbine outputs above have been normalized by their calibration constants.

Another form of this equation shows that the Rouhani model is a flowing quality weighted velocity as follows:

$$V_t = XV_S + (1 - X)V_W \tag{3}$$

where

X = flowing quality.

Solving equations (6) and (7) simultaneously gives the following individual phase velocities:

$$V_S = V_f + \eta^{-1/2}\Delta V \tag{9}$$

$$V_W = V_f - \eta^{1/2}\Delta V \tag{10}$$

where

$$\eta = \left(\frac{\alpha}{1 - \alpha}\right)\left(\frac{\rho_S}{\rho_W}\right) \tag{11}$$

$$\Delta V = \sqrt{I_f V_t - V_f^2} \tag{12}$$

$$V_f = \frac{I}{\rho_f V_t} \quad . \tag{13}$$

From an analysis of equation (7), the turbine velocity (V_t) is equal to or greater than the average fluid velocity (V_f). Therefore, from equation (13), the following is obtained:

$$\frac{I}{V_t^2} \leq \rho_f \tag{14}$$

and, in general, the following relationship holds true:

$$\rho_S \leq \frac{I}{V_t^2} \leq \rho_f \leq \rho_W \quad . \tag{15}$$

The relationship given by equation (15) is one of the tests used in the software to determine if the data is satisfactory for proceeding with the calculations. If the test is not found to hold true, then unity slip models are assumed. If the average density (ρ_f) is found not to satisfy the following test

$$\rho_S \leq \rho_f \leq \rho_W \quad , \tag{16}$$

then the unity slip velocity (VUS) is assumed to equal the turbine velocity (V_t) and the density (ρ_f) is set equal to I/V_t^2. If the following test,

$$\rho_S \leq \frac{I}{V_t^2} \leq \rho_f \tag{17}$$

is not satisfied, the VUS is calculated from:

$$VUS = \sqrt{\frac{I}{\rho_f}} \quad . \tag{18}$$

<u>Mass Flow Rate</u>. The calculations for mass flow rates for single-phase and two-phase water and steam flow conditions are presented below.

Single-Phase Water Flow Conditions. The mass flow rate (MW) for single-phase water flow conditions is calculated by the following relationship:

$$MW = A \times \rho_W \times V_W \tag{19}$$

where

A = pipe cross-sectional area

V_W = water velocity.

V_W is calculated from the relationship:

$$V_W = \sqrt{\frac{1}{\rho_W}} \quad . \tag{20}$$

Single-Phase Steam Flow Conditions. For single-phase steam flow conditions, the mass flow rate (MS) is calculated by the following relationship:

$$MS = A \times \rho_S \times V_S \tag{21}$$

where

V_S = turbine velocity reading based on an air calibration.

Two-Phase Flow Conditions. For the case of two-phase flow, the steam mass flow rates (MS) and the water mass flow rates (MW) are given by:

$$MS = A \times \alpha \times \rho_S \times V_S \tag{22}$$

and

$$MW = A \times (1-\alpha) \times \rho_W \times V_W \tag{23}$$

where V_S and V_W are obtained from equations (9) and (10), respectively.

PKL WATER-FLOW TEST FACILITY

The PKL water-flow test facility was designed for testing the four spools in single-phase water flows. The spools were flange-mounted in the facility piping. The facility allowed flow in one direction only, but the flow direction in the horizontal spools could be reversed by turning the spools around and installing them in reverse order. The vertical spool cannot be turned upside down and, therefore, testing was possible only in one flow direction. A schematic of the water-flow test facility is shown in Fig. 1.

Operation of the facility during testing involved starting the pump and manually opening the control valve to obtain an orifice-meter signal that corresponded to a desired flow rate.

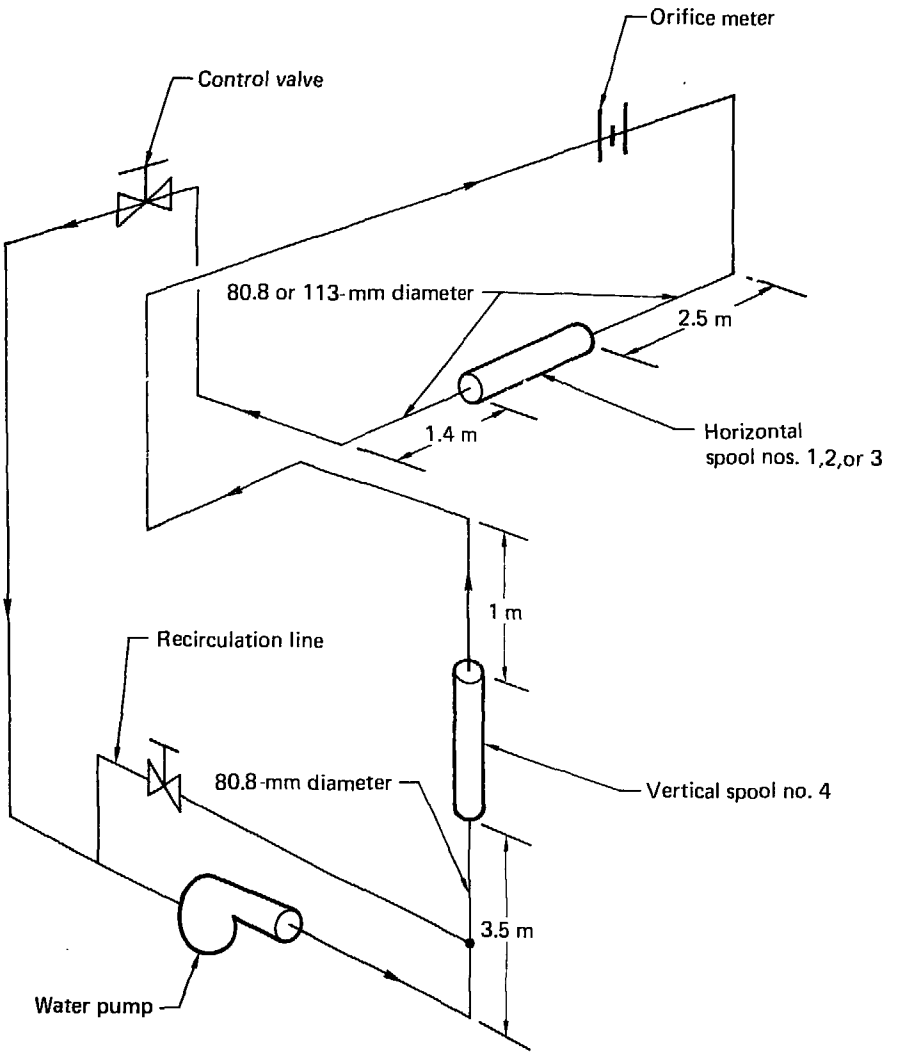

Figure 1. PKL water-flow test facility schematic.

PKL ACCEPTANCE TESTS

TEST DESCRIPTIONS

The four spools tested are identified below:

- Spool no. 1--80.8-mm diameter, right-hand, horizontal spool.
- Spool no. 2--80.8-mm diameter, left-hand, horizontal spool.
- Spool no. 3--113-mm diameter, horizontal spool.
- Spool no. 4--80.8-mm diameter, vertical spool.

Testing was intended to be in accordance with the acceptance testing plan,[7] with each spool undergoing water-flow rates representative of the following momentum fluxes:

Water-flow rate	Momentum flux (ft/m-s^2)
Low flow condition	72
Nominal flow condition	700
High flow condition	7,200

Due to a malfunction of the control valve in the PKL flow loop, the high-flow condition was not attainable for tests involving spool nos. 2 and 3. Spool nos. 1 and 2 were tested in both forward flow and reverse flow conditions. Spool no. 3 was tested only in forward flow due to a complete failure of the loop control valve in reverse flow tests. Spool no. 4 was tested only in reverse flow.

The testing procedure involved initially establishing a low flow rate through the spool. The spool DAS was started as soon as the initial flow rate appeared steady. After maintaining this flow rate for one minute the flow rate was increased to the nominal flow condition and then to the high flow condition with flow maintained for one minute at each condition. From the high flow condition, the flow was decreased to the nominal flow condition and then back down to the low flow condition. The time to complete this test sequence was on the order of 500 s, with the DAS collecting data every 10 s for this entire sequence.

Each test sequence was given a test number starting with number 5. The computer printout of engineering unit data and calculated flow parameters for all test sequences is given in Appendix B. Within each test sequence, five steady flow conditions representative of low, nominal, and high flow rates are usually established and they are each identified by a letter (i.e., A, B, C, D, or E) combined with the test sequence number (e.g., 5A). The time interval within each sequence which is applicable to a particular test is given in Table 2 in the "Time Interval" column.

TABLE 2. PKL test facility orifice-meter test results.[a/]

Test no.	Time interval, s	Orifice-meter signal, mA				Density, kg/m^3	Calculated velocity, m/s	Calculated momentum, $kg/m\text{-}s^2$
		High	Low	Average	Offset			
5A	0- 60	8.13	8.11	8.12	7.99	994	0.303	94
5B	130-194	8.97	8.95	8.96	7.99	994	0.841	702
5C	330-390	18.10	17.60	17.85	7.99	993	2.681	7,138
5D	495-555	9.00	8.97	8.985	7.99	993	0.852	724
5E	592-630	8.10	8.09	8.095	7.99	993	0.277	76
5F	720-770	18.10	17.93	18.015	7.99	993	2.703	7,257
6A	0- 60	8.10	8.09	8.095	8.0	994	0.263	69
6B	130-180	8.97	8.96	8.965	8.0	993	0.839	699
6C	275-330	18.02	17.68	17.85	8.0	993	2.680	7,131
6D	430-475	8.97	8.96	8.965	8.0	993	0.839	699
6E	490-520	8.10	8.09	8.095	8.0	993	0.263	69
7A	0- 60	8.11	8.10	8.105	8.0	993	0.277	76
7B	120-180	8.98	8.96	8.97	8.0	993	0.841	702
7C	240-300	18.01	17.77	17.89	8.0	993	2.685	7,160
7D	370-420	8.98	8.96	8.97	8.0	992	0.841	702
7E	440-500	8.11	8.10	8.105	8.0	992	0.277	76
9A	0- 60	8.10	8.09	8.095	8.01	995	0.249	62
9B	90-105	8.96	8.94	8.95	8.01	995	0.827	680
9C	210-270	18.05	17.77	17.91	8.01	995	2.684	7,167
9D	430-455	10.54	10.49	10.515	8.01	994	1.351	1,813
10A	0- 60	8.11	8.10	8.105	8.01	994	0.263	69
10B	90-150	8.98	8.96	8.97	8.01	994	0.836	695
10C	210-270	10.01	9.97	9.99	8.01	994	1.201	1,433
10D	320-380	8.97	8.95	8.96	8.01	994	0.832	688
10E	400-465	8.10	8.09	8.095	8.01	994	0.249	62

TABLE 2. PKL test facility orifice-meter test results.[a] (Continued)

Test no.	Time interval, s	Orifice-meter signal, mA				Density, kg/m^3	Calculated velocity, m/s	Calculated momentum, $kg/m\text{-}s^2$
		High	Low	Average	Offset			
11A	0- 60	8.10	8.09	8.095	8.01	997	0.248	62
11B	105-180	8.97	8.96	8.965	8.01	996	0.833	691
11C	220-280	10.03	10.00	10.015	8.01	995	1.208	1,451
11D	330-390	8.97	8.96	8.965	8.01	995	0.834	691
11E	410-470	8.11	8.10	8.105	8.01	995	0.263	69
12A	0- 60	8.10	8.09	8.095	8.01	995	0.249	62
12B	90-150	8.97	8.95	8.96	8.01	995	0.831	688
12C	195-260	10.02	10.00	10.01	8.01	995	1.206	1,448
12D	300-360	8.98	8.96	8.97	8.01	994	0.836	695
12E	375-450	8.10	8.09	8.095	8.01	994	0.249	62
13A	0- 60	8.11	8.09	8.10	8.01	996	0.256	65
13B	90-150	8.98	8.96	8.97	8.01	995	0.836	695
13C	200-260	10.03	9.99	10.01	8.01	994	1.207	1,448
13D	320-380	8.98	8.96	8.97	8.01	994	0.836	695
13E	410-470	8.11	8.09	8.10	8.01	994	0.256	65
14A	0- 60	8.11	8.10	8.095	8.01	994	0.249	62
14B	90-150	8.96	8.94	8.95	8.01	993	0.828	680
14C	215-270	10.02	9.98	10.00	8.01	993	1.204	1,441
14D	350-410	8.97	8.94	8.955	8.01	993	0.830	684
14E	425-480	8.11	8.09	8.10	8.01	993	0.256	65
15A	0-100	10.02	9.99	10.005	8.015	993	0.616	376
15B	150-200	8.96	8.95	8.955	8.015	993	0.423	178
15C	290-360	10.04	9.97	10.005	8.015	993	0.616	376
15D	420-460	12.44	12.35	12.395	8.015	993	0.914	829

[a] Test results based on calculations of equations (24) and (25).

ORIFICE-METER RESULTS

Only one size orifice meter was used to obtain flow rates in the water loop. The velocity of the flow ($V_{orifice}$) is determined from the orifice-meter signal (MA) in mA, from the offset (OFFSET) in the instrument in mA, and from the fluid density (ρ_W) in kg/m^3 from the following relationship[8]:

$$V_{orifice}\ (m/s) = \frac{0.1952}{0.00513}\sqrt{\frac{MA - OFFSET}{2\rho}} \quad . \qquad (24)$$

During testing, the orifice-meter signal varied between a high and low value with the average of these signals used in the above equation. The offset usually remained steady at one value. Density was obtained from steam tables based on a measurement of temperature by the spool thermocouple.

Table 2 gives results for the above described calculation for all the acceptance tests. Also given in Table 2 are the results of a calculation of momentum flux obtained from:

$$\text{Momentum flux } (\text{kg/m-s}^2) = \rho_W V^2_{orifice} \quad . \tag{25}$$

SPOOL TEST RESULTS

During each of the acceptance tests, the PKL DAS acquired data and performed calculations at 10-s intervals. The average of the turbine velocity and momentum flux measurements during a test are given in Table 3. Also shown and repeated from Table 2 are the velocity and momentum flux results obtained from the PKL water-loop orifice meter. The percentage difference of the readings between the spool-determined and orifice-determined velocities and momentum fluxes is shown in Table 3 and is calculated by:

$$\% \text{ diff} = \frac{Y_{spool} - Y_{orifice}}{Y_{orifice}} \times 100 \tag{26}$$

where

Y_{spool} = spool-determined average velocity or momentum flux

$Y_{orifice}$ = orifice-determined average velocity or momentum flux.

Allowable percentage errors in reading due to instrument tolerances of 1% of full scale are given in the "Allow ±%" column of Table 3. The tolerance for

velocity measurements is 0.6 m/s. The tolerance for momentum flux is 72 kg/m-s^2. The allowable percentage error is calculated by:

$$\text{Allow } \pm\% = \frac{\text{TOL}}{\gamma_{\text{orifice}}} \tag{27}$$

where

TOL = spool velocity or momentum flux tolerance.

TABLE 3. PKL spool piece water-flow test results.[a/]

Test no.	Spool no.	Flow direction b/	Velocity (m/s) Turbine	Orifice	% diff c/	Allow ±% d/	Momentum flux (kg/m-s^2) Drag Screen	Orifice	% diff c/	Allow ±% d/
5A	1	F	0.292	0.308	-5.2	195.0	95	94	1.1	77.0
5B	1	F	0.819	0.841	-2.6	71.0	686	702	-2.3	10.0
5C	1	F	2.615	2.681	-2.5	22.0	7035	7138	-1.4	1.0
5D	1	F	0.831	0.852	-2.5	70.0	704	724	-2.8	9.9
5E	1	F	0.245	0.277	-12.0	217.0	80	76	5.3	95.0
5F	1	F	2.650	2.703	-2.0	22.0	7279	7257	0.3	1.0
6A	1	F	0.278	0.263	5.7	228.0	75	69	8.7	104.0
6B	1	F	0.821	0.839	-2.1	72.0	686	699	-1.9	10.0
6C	1	F	2.585	2.680	-3.5	22.0	7104	7131	-0.4	1.0
6D	1	F	0.813	0.839	-3.1	72.0	681	699	-2.6	10.0
6E	1	F	0.244	0.263	-7.2	228.0	79	69	15.0	104.0
7A	1	R	0.247	0.277	-11.0	217.0	131	76	72.0	95.0
7B	1	R	0.844	0.841	0.4	71.0	679	702	-3.3	10.0
7C	1	R	2.726	2.685	1.5	22.0	6860	7160	-4.2	1.0
7D	1	R	0.831	0.841	-1.2	71.0	693	702	-1.3	10.0
7E	1	R	0.255	0.277	-7.9	217.0	179	76	135.0	95.0
9A	4	R	0.146	0.249	-41.0	241.0	58	62	6.5	116.0
9B	4	R	0.761	0.827	-8.0	73.0	675	680	0.7	11.0
9C	4	R	2.605	2.684	-2.9	22.0	7857	7167	9.6	1.0
9D	4	R	1.277	1.351	-5.5	44.0	1871	1813	3.2	4.0
10A	4	R	0.157	0.263	-40.0	228.0	62	69	10.0	104.0
10B	4	R	0.761	0.836	-9.0	72.0	697	695	0.3	10.0
10C	4	R	1.090	1.201	-9.2	50.0	1469	1433	2.5	5.0
10D	4	R	0.761	0.832	-8.5	72.0	688	688	0.0	0.0
10E	4	R	0.136	0.249	-45.0	241.0	58	62	6.5	116.0

Table 3. PKL spool piece water-flow test results.[a] (Continued)

Test no.	Spool no.	Flow direction b/	Velocity (m/s) Turbine	Velocity (m/s) Orifice	Velocity (m/s) % diff c/	Velocity (m/s) Allow ±% d/	Momentum flux (kg/m-s^2) Drag Screen	Momentum flux (kg/m-s^2) Orifice	Momentum flux (kg/m-s^2) % diff c/	Momentum flux (kg/m-s^2) Allow ±% d/
11A	2	F	0.130	0.248	-48.0	242.0	23	62	-63.0	116.0
11B	2	F	0.739	0.833	-11.0	72.0	589	691	-15.0	10.0
11C	2	F	1.122	1.208	-7.1	50.0	1246	1451	-14.0	5.0
11D	2	F	0.738	0.834	-12.0	72.0	592	691	-14.0	10.0
11E	2	F	0.142	0.263	-46.0	228.0	31	69	-55.0	104.0
12A	2	F	0.142	0.249	-43.0	241.0	32	62	-48.0	116.0
12B	2	F	0.735	0.831	-12.0	72.0	593	688	-14.0	10.0
12C	2	F	1.123	1.206	-6.9	50.0	1254	1448	-13.0	5.0
12D	2	F	0.748	0.836	-11.0	72.0	591	695	0.6	10.0
12E	2	F	0.144	0.249	-42.0	241.0	32	62	-48.0	116.0
13A	2	R	0.357	0.256	39.0	234.0	99	65	52.0	111.0
13B	2	R	0.937	0.836	12.0	72.0	708	695	1.9	10.0
13C	2	R	1.284	1.207	6.5	50.0	1529	1448	5.6	5.0
13D	2	R	0.924	0.836	11.0	72.0	709	695	2.0	10.0
13E	2	R	0.357	0.256	39.0	234.0	108	65	66.0	111.0
14A	2	R	0.347	0.249	39.0	241.0	108	62	74.0	116.0
14B	2	R	0.920	0.828	11.0	72.0	697	680	2.5	11.0
14C	2	R	1.300	1.204	8.0	50.0	1501	1441	4.2	5.0
14D	2	R	0.920	0.830	11.0	72.0	698	684	2.0	11.0
14E	2	R	0.357	0.256	39.0	234.0	110	65	69.0	111.0
15A	3	F	0.631	0.616	2.4	97.0	325	376	-14.0	19.0
15B	3	F	0.420	0.423	0.7	142.0	139	178	-22.0	40.0
15C	3	F	0.630	0.616	2.3	97.0	325	376	-14.0	19.0
15D	3	F	0.916	0.914	0.2	66.0	769	829	-7.2	8.7

a/ Test results based on calculations of equations (24) and (25).

b/ F is forward flow, and R is reverse flow.

c/ % diff is the percentage difference of the readings between the spool-determined and orifice-determined velocities and momentum fluxes.

d/ Allow ±% is the allowable percentage reading errors due to instrument tolerances of 1% of full scale.

SUMMARY AND CONCLUSIONS

The performance of the turbine flowmeter during acceptance tests was well within the allowable tolerance limits for all of the tests. This is shown in Table 3 by comparing the percentage of reading differences column (% diff) and the allowable percentage difference column (Allow ±%).

The performance of the drag screen in measuring momentum flux is generally within allowable tolerances. Some tests exceed tolerances; however, considering the possible error of the orifice meter, the results appear reasonable. For test no. 9C, a 9.6% difference is observed versus an allowable 1% difference and is an indication of a possible bad data point.

REFERENCES

(1) W. Stein, Measurements, Error Analysis, and Calculations of Water and Steam Individual Mass Flow Rates, Velocities, and Related Flow Parameters Obtained From Single-Phase and Two-Phase Prototype Tests of the PKL Instrumented Spool Pieces for the U. S. NRC-RSR 3-D Program, Lawrence Livermore Laboratory, Livermore, Calif., UCRL-52717 (September 1979).

(2) R. F. Smellie, PKL Instrumented Spool Piece Final Design Review, EG&G, Inc., San Ramon Operations, MES-014, Tab 2, p. 35 (April 1979).

(3) G. D. Lassahn, Loft Experimental Measurements Uncertainties Analyses. Volume 16: Loft Three-Beam Gamma Densitometer System, Tree-NUREG-1089 (February 1978).

(4) G. D. Lassahn, Loft Three-Beam Densitometer Data Interpretation, Tree-NUREG-1111 (October 1977).

(5) Calculations developed by J. Colson, INEL, Idaho Falls, Idaho; private communication W. Stein/J. Colson (January 1978).

(6) H. Estranda, Jr., and J. D. Sheppard, Some Aspects of Interpreting Two-Phase Flow Measurements in Instrumented Piping Spool Pieces, NUREG-0280 (June 1977).

(7) W. Stein, Integral Acceptance Test Plan for 80.8-mm Horizontal (Type A), 80.8-mm Vertical (Type AV), and 113-mm Horizontal (Type B) PKL Instrumented Spool Piece Systems, EG&G, Inc., San Ramon Operations, MES-010, Revision A (May 1979).

APPENDIX A

PKL SPOOL PIECE DRAWINGS
(EG&G DRAWING NOS. 137086, 137087, AND 137088)

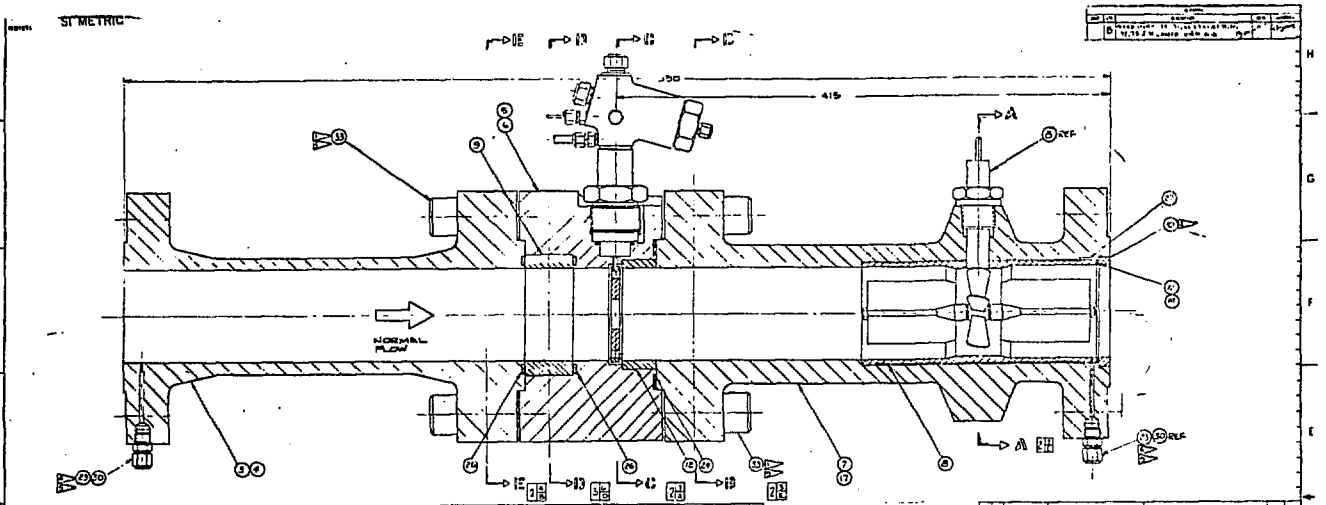

PART NO	DESCRIPTION
1970861	SPOOL ASSY - RIGHT HAND
1970862	SPOOL ASSY - LEFT HAND

NOTES: SEE SHT 2 of 3

1	1	197208-1	BRACKET		46
1	1		[illegible]	TELEDYNE TAPER CO	45
1	1	197219-2	DIFFERENTIAL TRANSDUCER ASSY		42
1	1	197818-1	MOUNTING PANEL		38
3	3		[illegible]	SST	37
3	3		[illegible]	SST	36
3	3		[illegible]	SST	35
6	6		[illegible]	SST	34
6	6		[illegible]	SST	33
6	6		[illegible]	SST	32
12	12		[illegible]	SST	31
6	6		[illegible]	SST	30
4	4		[illegible]	SST	29
1	1	197208-2	BRACKET		28
1	1	197210-2	[illegible]		27
1	1	197338-1	[illegible]		26
1	1	197339-1	[illegible]		25
1	1	197218-2	[illegible]		24
1	1	197218-3	[illegible]		23
1	1	197218-2	[illegible]		22
1	1	197217-1	MOUNTING PLATE		21
14	14		[illegible]	GRADE 8, STL	20
1	1	MS-[illegible]	[illegible]	NICKEL-T SPECIAL [illegible]	19
2	2	197160-1	[illegible]		18
2	2	[illegible]	METALLIC O-RING	[illegible]	17
3	3	[illegible]	METALLIC O-RING	[illegible]	16
2	2	[illegible]	METALLIC O-RING	[illegible]	15
1	1		[illegible]	[illegible]	14
2	2	24-SH	GASKET	[illegible]	13
4	4		[illegible]	[illegible]	12
2	2	13-SF	GASKET	[illegible]	11

8	8		NUT, REG. HEX [illegible]	SST	76
2	2		[illegible]	SST	75
4	4		[illegible]	SST	74
4	4		NUT, REG. HEX [illegible]	SST	73
12	12		[illegible]	SST	72
1	1	315	LAMP, AIRCRAFT		71
1	1	PM 101E	LIGHT FIXTURE	PETERSON MFG. CO	70
2	2	[illegible]	[illegible]		69
5	5	[illegible]	PLUG, CABLE COUP.		68
2	2	AC-[illegible]	CONNECTION SOCKET	[illegible]	67
2	2	[illegible]	METALLIC O-RING	[illegible]	66
2	2	[illegible]	REDUCER	[illegible]	65
1	1	ATK	SLEEVE	PARKER HANNIFIN CO	64
1	1	4DTX	FITTING	PARKER HANNIFIN CO	63
4	4		[illegible]	SST	62
2	2		[illegible]	SST	61
2	2		[illegible]	SST	60
2	2		[illegible]	SST	59
1	1	[illegible]	CLAMP, [illegible]	"A MFG. CORP"	58
1	1	197210-1	[illegible]	[illegible]	57

1	1		CONNECTOR, FIED		55
2	2	137182-1	[illegible]		54
3	3	137180-1	PLUG		53
1	1	137162-1	[illegible] ASSEMBLY		52
1	1	137162-2	[illegible] ASSEMBLY		51
1	1	137162-3	[illegible] ASSEMBLY		50
1	1	137220-1	[illegible] STEEL		49
1	1	137142-2	[illegible]		48
1	1	137111-1	[illegible]		47
1	1	137165-1	[illegible]		46
2	2	137093-1	[illegible] STEEL		45
1	1	137162-1	[illegible] RING		44
1	1	[illegible]	[illegible]		43
1	1	137171-1	[illegible]		42
1	1	137093-2	[illegible] ASSY		41
1	1	137082	[illegible]		40
1	1	137062-1	[illegible]		39
1	1	137220-2	[illegible]		38
1	1	137220-3	[illegible]		37
1	1	137160-1	[illegible]		36
1	1	137104-1	[illegible]		35
		-12	ASSEMBLY		34
		-11	ASSEMBLY		33

1	1		[illegible]		32
1	1		[illegible]		31
1	1		[illegible]		30
1	1		[illegible]		29
1	1		[illegible]		28
1	1		[illegible]		27
1	1		[illegible]		26
1	1		[illegible]		25
1	1		[illegible]		24
1	1		[illegible]		23
1	1		[illegible]		22
1	1		[illegible]		21
1	1		[illegible]		20
1	1		[illegible]		19
1	1		[illegible]		18
1	1		[illegible]		17
1	1		[illegible]		16
1	1		[illegible]		15
1	1		[illegible]		14
1	1		[illegible]		13
1	1		[illegible]		12
1	1		[illegible]		11
1	1		[illegible]		10
1	1		[illegible]		9
1	1		[illegible]		8
1	1		[illegible]		7
1	1		[illegible]		6
1	1		[illegible]		5
1	1		[illegible]		4
1	1		[illegible]		3
1	1		[illegible]		2
1	1		[illegible]		1

A0010

SPOOL ASSEMBLY-INSTRUMENTED HORIZONTAL BO.B PKL

1970861

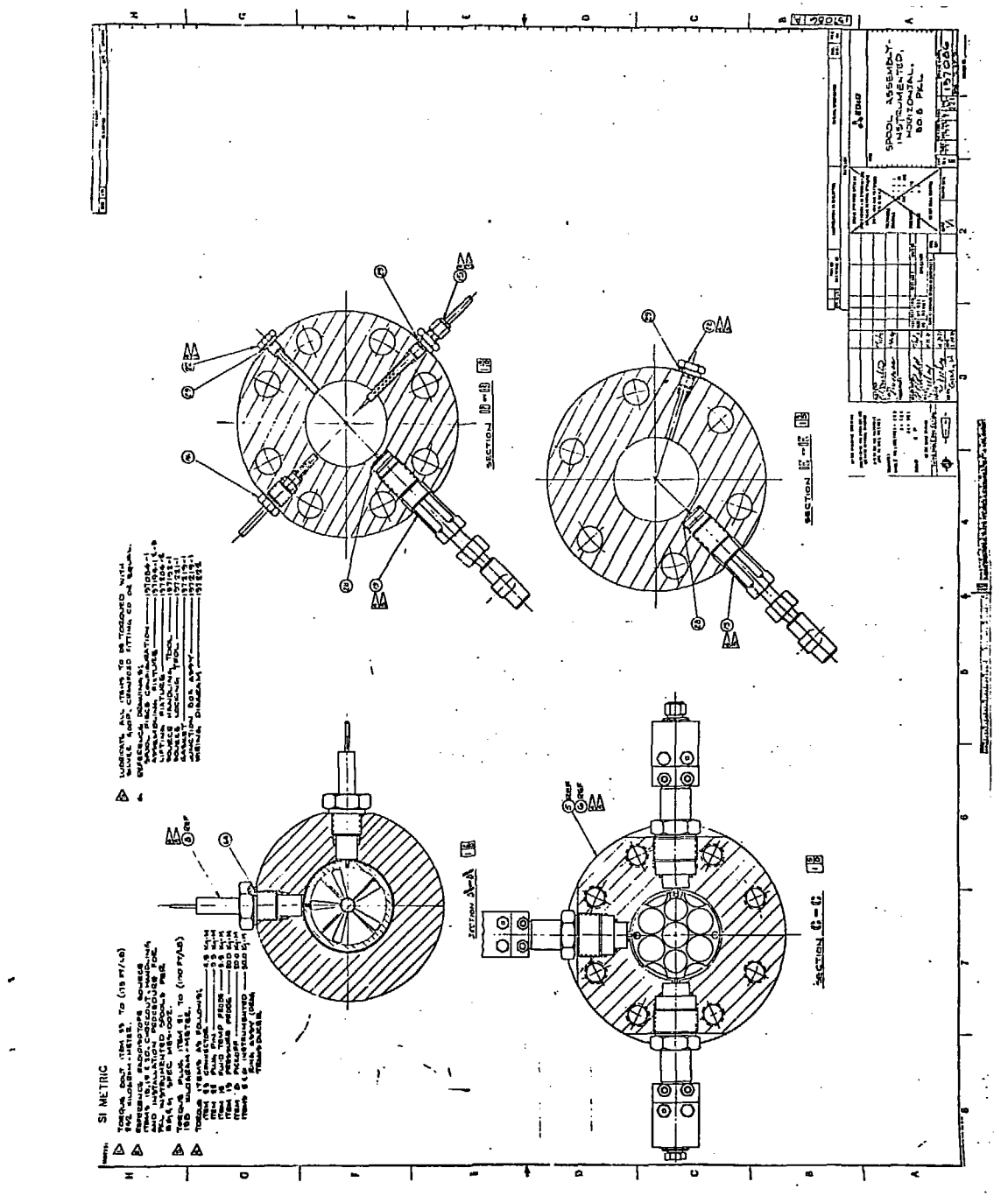
SI METRIC
SECTION A-A
SECTION B-B
SECTION C-C
SECTION E-E
SPOOL ASSEMBLY-
INSTRUMENTED,
HORIZONTAL,
80.8 PKL
157086

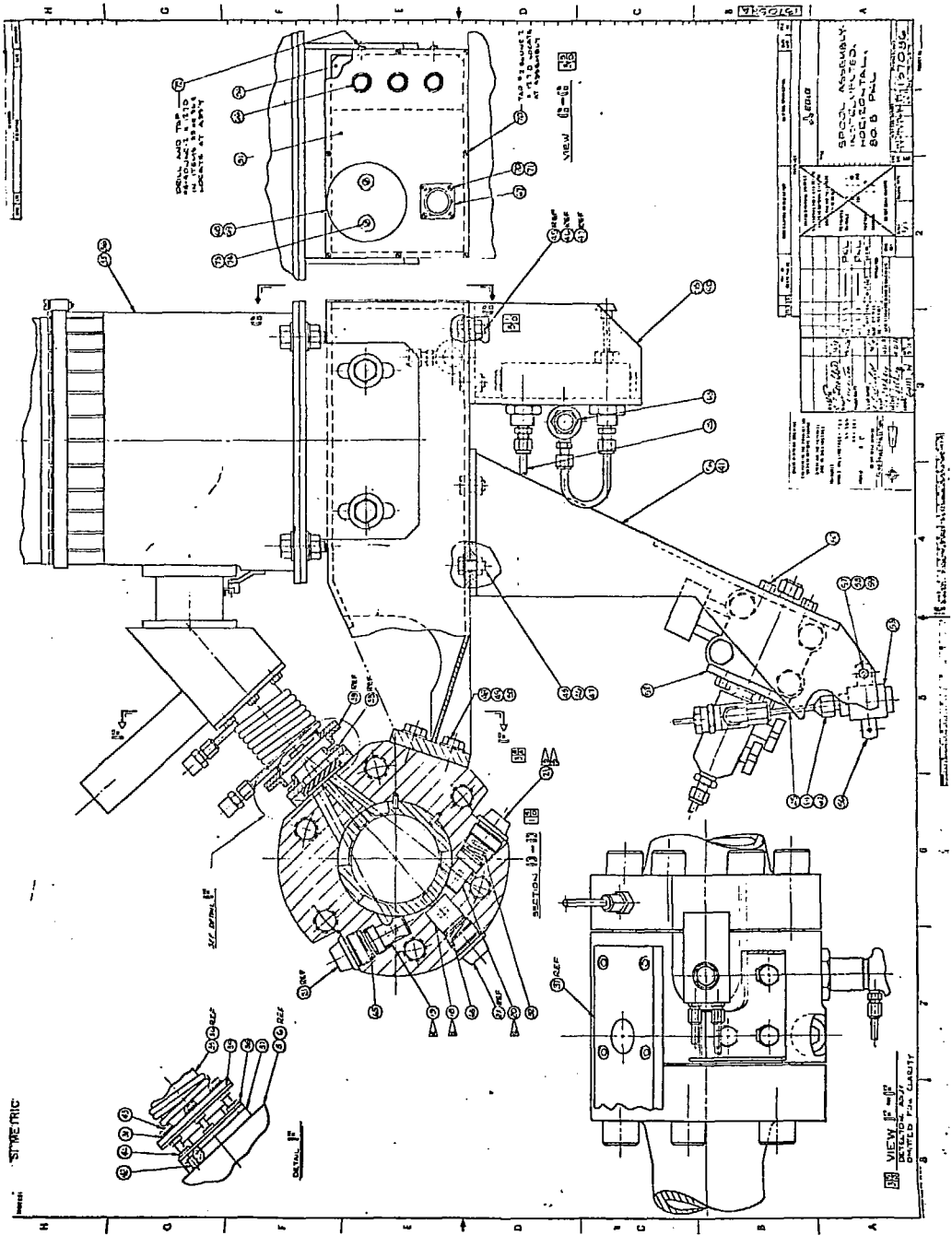
SPOOL ASSEMBLY
INSTRUMENTED
HORIZONTAL
80.5 PNL
VIEW
SECTION
DETAIL
SYMETRIC

SI METRIC

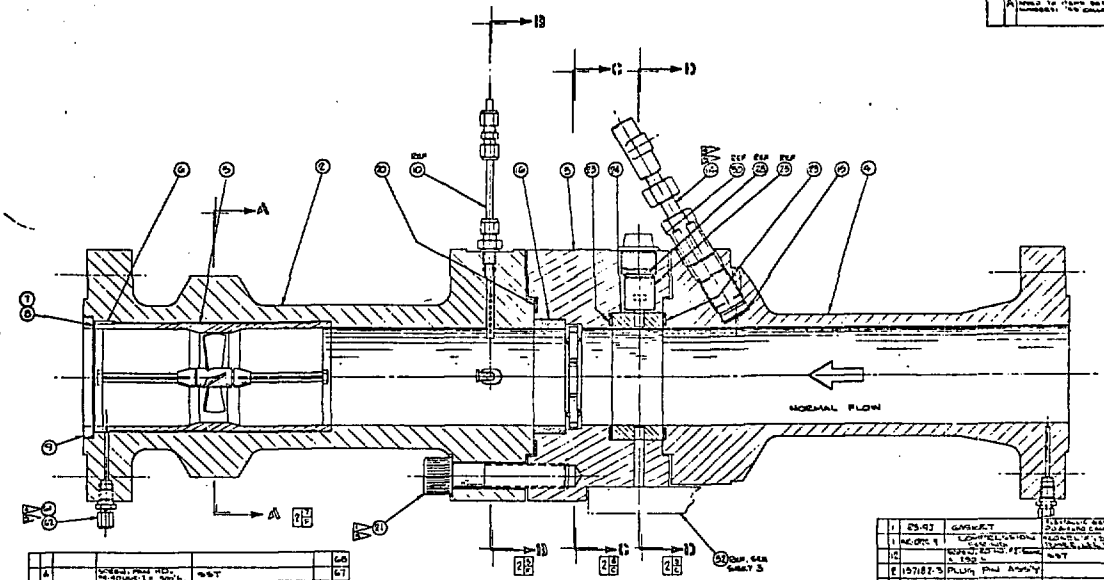

	4		WASHER, FLAT NO. 8 NOM	SST	68
	1	515	LAMP, AIRCRAFT		67
	1	PM-102B	LIGHT FIXTURE	PETERSON MFG CO	66
	1	MS3106-8P	RECEPTACLE, SEAL MOUNTING		65
	1	157116-1	PLUG, CABLE BRKG.		64
	2	2-110-90-16	METALLIC O-RING	UNITED AIRCRAFT PRODUCTS	63
	2	157165-3	CONNECTOR, MODIFIED		62
	1	16 MD F.O.	REDUCER	MAGNETIC DEVELOPMENT CORPORATION CO.	61
	1	4TX-3A	SLEEVE	PARKER HANNIFIN CO	59
	1	4DTX-3A	NUT	PARKER HANNIFIN CO	58
	4		HEX. HD. MACHINE SCREW NO. 10-32 UNF-2		57
	2		WASHER, FLAT NO. 10 NOM	SST	56
	2		HEX. HD. CAP SCREW, SPLIT, 1/4" NOM	SST	55
	2		HEX. HD. CAP SCREW NO. 10-32 UNF-2A 0.625"	SST	54
	1	TWC-LD-4-8-T	CLAMP, VALVE TUBE	TA MFG. CORP	53
	8		STRAIGHT SEC. SPLIT, 1/2" NOM	SST	52
	8		HEX. HD. CAP SCREW NO. 1/2-13 UNC-2A	SST	51
	8		HEX. HD. CAP SCREW NO. 1/2-13 UNC-2A 1.000"	SST	50
	1	157121-1	WATER, COOLING MANIFOLD		49
	1	157207-1	DIRT SEALS DRIVE SHAFT BUSHING		48
	1	157095-1	ANTI-ROTATION BUSHING, OSCILLATING TRANSDUCER ASSY.		47
	1	157215-1	MOUNTING PANEL		46
	1	157218-1	MOUNTING PANEL		45
	1	157217-1	MOUNTING PLATE		44
	2		HEX. HD. CAP SCREW NO. 1/2-13 UNC-2	SST	43
	QTY. REQ'D	PART OR DESIGNATION	MATERIAL & SPECIFICATION	MATERIAL / SPECIFICATION	ITEM NO.

	4		WASHER, FLAT NO. 8 NOM	SST	42
	4		LOCKWASHER, SPLIT NO. 8 NOM	SST	41
	4		SCREW, HEX. HD. 5/8-11 UNC-2 x 1.00"	SST	40
	12		HEX. HD. CAP SCREW NO. 1/2-13 UNC-2	SST	39
	4		WASHER, FLAT NO. 1/2 NOM	SST	38
	4		WASHER, FLAT NO. 1/2-13 UNC-2 1.00"	SST	37
	6	157140-1	HYDRAULIC BUSHING		36
	1	157164-1	DETECTOR ASSY		35
	1	157139-1	UPPER INSULATING SHIELD		34
	1	157137-1	INSULATOR		33
	1	157160-1	SOLENOID VALVE ASSEMBLY		32
	3	2-110-90-16	METALLIC O-RING	UNITED AIRCRAFT PRODUCTS	31
	3	157130-1	PLUG		30
	1/2		WASHER, FLAT NO. 1/2 NOM	SST	29
	2	AC 6126-4	UNIVERSAL JOINT	SPICER MFG. CO.	28
	1	157125-2	SPACER HOLDER ASSEMBLY		27
	1	157126-1	SPACER HOLDER ASSEMBLY		26
	1	157124-1	SPACER HOLDER ASSEMBLY		25
	1	157115-1	RING ASSEMBLY		24
	2	CA-94	GASKET	PARKER HANNIFIN CO.	23
	4		HEX. HD. CAP SCREW NO. 1/2-13 UNC-2	SST	22
	4		SCREW, HEX. HD. 1/2-13 UNC-2 x 2.50"	SST	21
	QTY. REQ'D	PART OR DESIGNATION	MATERIAL & SPECIFICATION	MATERIAL / SPECIFICATION	ITEM NO.

NOTES: SEE SHTS 2 & 3

	1	83-93	GASKET	PARKER HANNIFIN CO.	20
	1	AC 6126-4	UNIVERSAL JOINT	SPICER MFG. CO.	19
	1/2		WASHER, FLAT NO. 1/2 NOM	SST	18
	2	157187-3	PLUG, PIN ASSY		17
	1	157112-1	SPACER, RING		16
	2	2-110-90-16	METALLIC O-RING	UNITED AIRCRAFT PRODUCTS	15
	2	157091-1	PRESSURE PROBE		14
	1	157134-2	WALL TEMP PROBE		13
	1	157129-1	STEAM TEMP PROBE		12
	5	2-110-90-16	METALLIC O-RING	UNITED AIRCRAFT PRODUCTS	11
	1	157111-1	FLUID TEMP PROBE ASSEMBLY		10
	1	157117-1	RETAINER RING		9
	1	157155-1	WAVE SPRING		8
	1/2	157141-1	SHIM		7
	1		SCREW, HEX. HD. 5/8-11 UNC-2A x 3.00"	SST	6
	1	157082	TUCKING TUNNEL ASSEMBLY		5
	1	157087-1	STILLION SPACER		4
	1	157172-3	INSTRUMENTED END ASSEMBLY	ASSEMBLY	3
	1	157090-1	FLOW-METER SPOOL		2
	-1		ASSEMBLY		1
	QTY. REQ'D	DESCRIPTION OR SPECIFICATION		MATERIAL OR SPECIFICATION	ITEM NO.

SPOOL ASSY, INSTRUMENTED, VERTICAL, 80.8/ PKL

157087

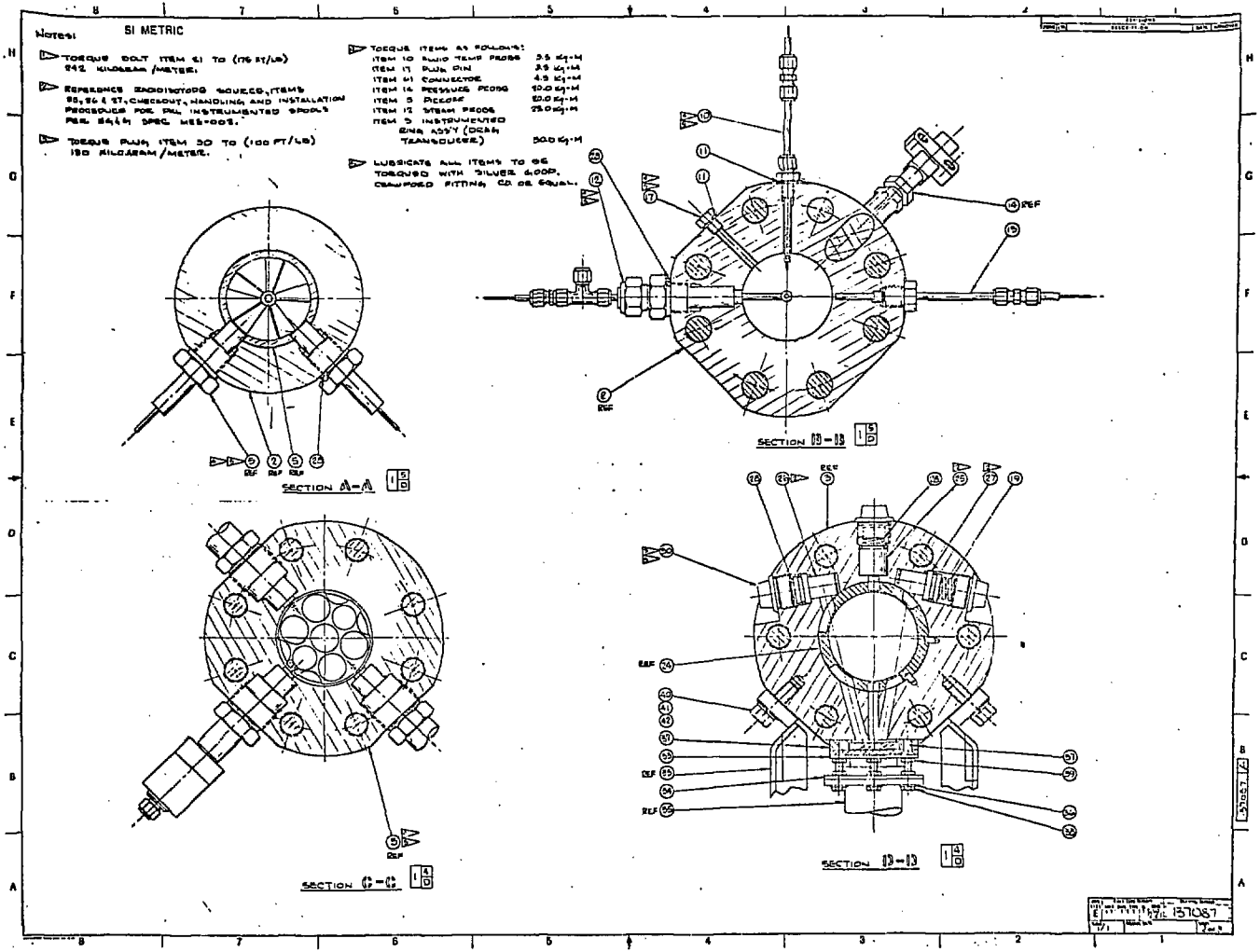
SI METRIC
Notes:
TORQUE BOLT ITEM 21 TO (175 FT/LB) 242 KILOGRAM/METER.
REFERENCE RADIOISOTOPE SOURCE, ITEMS 25, 26 & 27, CHECKOUT, HANDLING AND INSTALLATION PROCEDURE FOR PKL INSTRUMENTED SPOOLS PER EG&G SPEC MES-002.
TORQUE PLUG ITEM 30 TO (100 FT/LB) 180 KILOGRAM/METER.
TORQUE ITEMS AS FOLLOWS:
ITEM 10 FLUID TEMP PROBE 3.5 KG-M
ITEM 17 PLUG PIN 3.5 KG-M
ITEM 61 CONNECTOR 4.5 KG-M
ITEM 14 PRESSURE PROBE 10.0 KG-M
ITEM 5 PICKOFF 20.0 KG-M
ITEM 12 STEAM PROBE 25.0 KG-M
ITEM 3 INSTRUMENTED RING ASS'Y (DRAG TRANSDUCER) 50.0 KG-M
LUBRICATE ALL ITEMS TO BE TORQUED WITH SILVER GOOP. CRAWFORD FITTING CO. OR EQUAL.
SECTION A-A
SECTION B-B
SECTION C-C
SECTION D-D
REF
137087

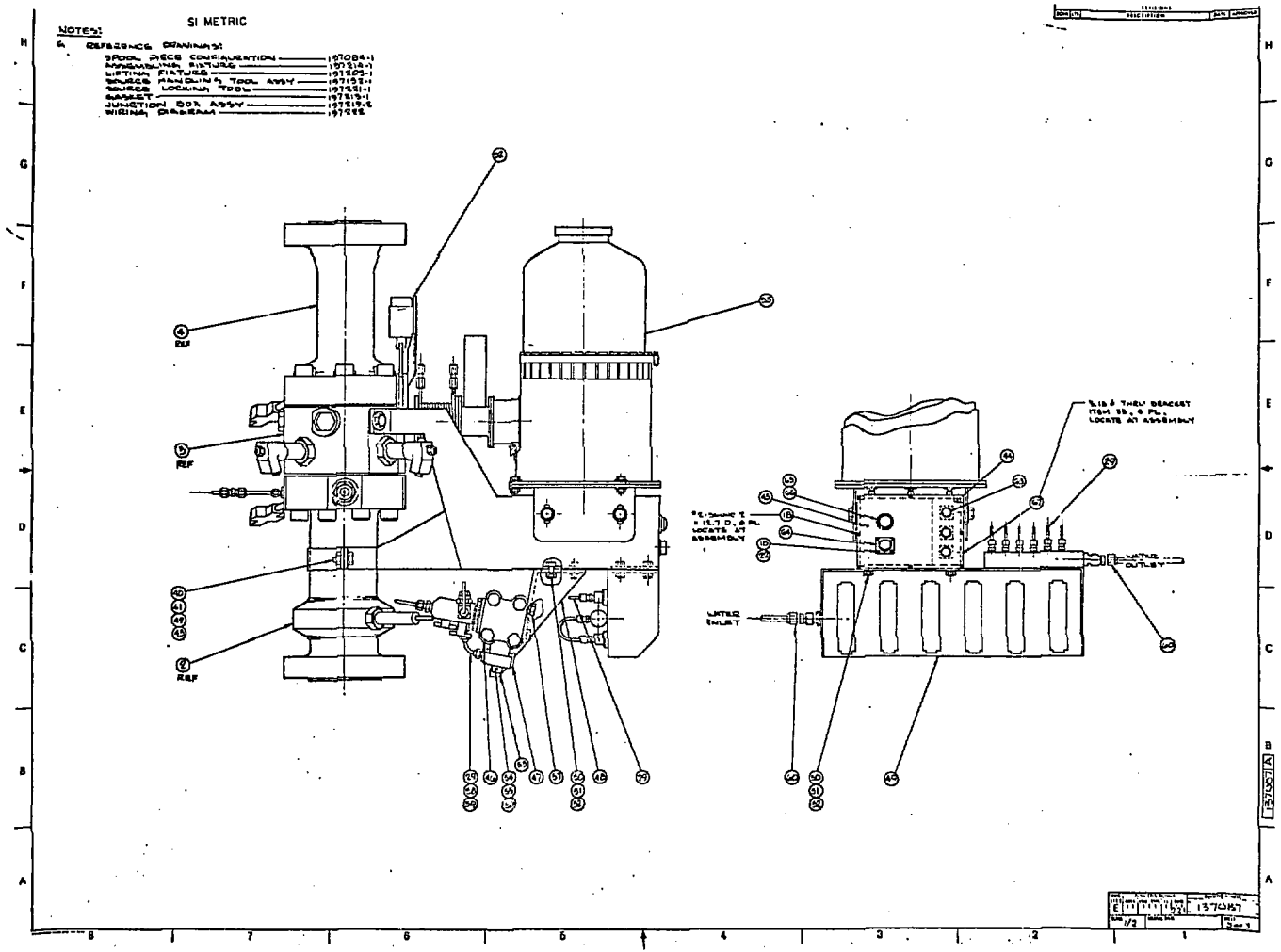
SI METRIC
NOTES:
6. REFERENCE DRAWINGS:
SPOOL PIECE CONFIGURATION 137084-1
ASSEMBLING FIXTURE 137214-1
LIFTING FIXTURE 137203-1
SOURCE HANDLING TOOL ASSY 137152-1
SOURCE LOCKING TOOL 137221-1
GASKET 137215-1
JUNCTION BOX ASSY 137219-2
WIRING DIAGRAM 137222
REF
REF
REF
WATER INLET
WATER OUTLET
137087
1/2

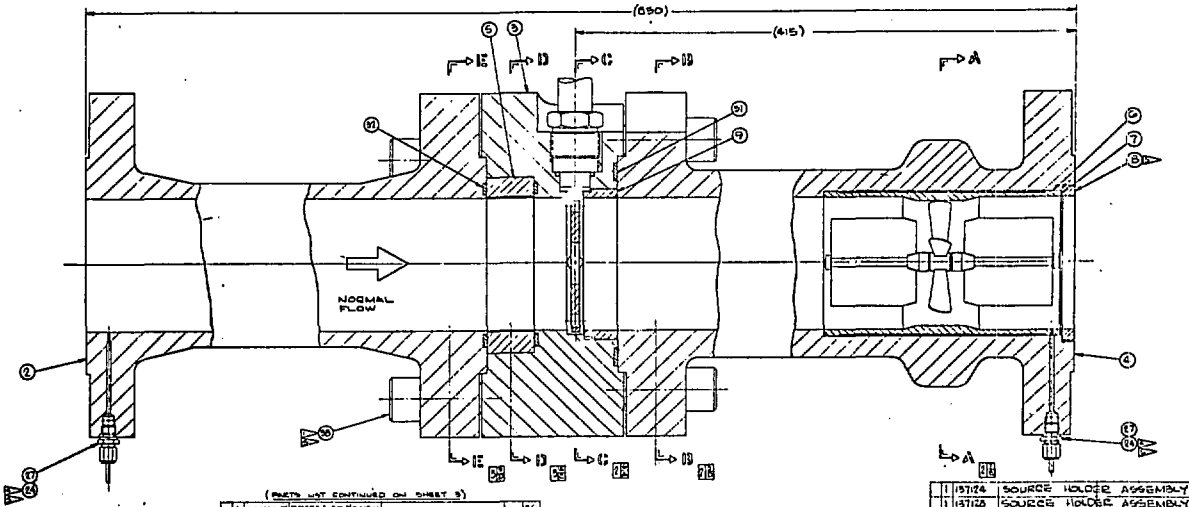

(PARTS LIST CONTINUED ON SHEET 3)

1	[illegible]	[illegible]			56
1	157815-2	MOUNTING PANEL			55
1	157817-2	MOUNTING PLATE			54
2	56-1170-8	REDUCER	"SWAGELOK"		53
AR		TUBING, 316 SS OD 1.218 WALL	ASTM A269 SEAMLESS, ANNEALED, 316T		52
1	40TA	NUT	PACKER HANNIFIN CO		51
1	4TA	SLEEVE	PACKER HANNIFIN CO		50
1	VARCO-HOT	CLAMP	FA MFG CORP		49
2		[illegible]	316T		48
2		[illegible]	316T		47
4		[illegible]	316T		46
8		[illegible]	316T		45
8		[illegible]	316T		44
5		[illegible]	316T		43
12		[illegible]	316T		42
4		[illegible]	316T		41
6		[illegible]	316T		40
8		[illegible]	316T		39
16		[illegible]	316T		38
1	157095-1	PRESSURE TRANSDUCER	TELEDYNE TABOR CO		37
1	157115-1	PRESSURE TRANSDUCER	TELEDYNE TABOR CO		36
1	[illegible]	SPRING, COMPRESSION	[illegible]		35
1	[illegible]	[illegible]	[illegible]		34
1	[illegible]	[illegible]	[illegible]		33
QTY	PART NO	DESCRIPTION	MATERIAL / SPECIFICATION		

PARTS LIST

12	[illegible]	GASKET, COMPRESSION	METALLIC GASKET CO		32
1	[illegible]	GASKET, COMPRESSION	METALLIC GASKET CO		31
12	[illegible]	O RING, METALLIC	UNITED AIRCRAFT PROD CO		30
8	[illegible]	O RING, METALLIC	UNITED AIRCRAFT PROD CO		29
4	[illegible]	O RING, METALLIC	UNITED AIRCRAFT PROD CO		28
8	[illegible]	O RING, METALLIC	UNITED AIRCRAFT PROD CO		27
1	157208-1	MOUNTING BRACKET			26
1	157210-1	MANIFOLD			25
2	157153-3	MODIFIED CONNECTOR			24
AR	157166-2	SHIM			23
1	157158-1	SHIELDING VALVE ASSEMBLY			22
1	157139-1	LOWER INSULATOR			21
1	157138-1	UPPER INSULATOR			20
5	157130-1	PLUG			19
1	157128	SOURCE HOLDER ASSEMBLY			18
QTY	PART NO	DESCRIPTION	MATERIAL / SPECIFICATION		

PARTS LIST

1	157126	SOURCE HOLDER ASSEMBLY			17
1	157128	SOURCE HOLDER ASSEMBLY			16
1	157160-1	DETECTOR ASSEMBLY			15
6	157162-1	PLUG PIN			14
1	157111-2	FLUID PROBE			13
2	157099-1	PRESSURE PROBE			12
6	157140-1	INSULATOR BUSHING			11
1	157154-1	WALL PROBE			10
1	157-12-2	SPACER RING			9
1	157117-1	RETAINER RING			8
1	157165-2	WAVE SPR NG			7
1	157003	TURBINE FLOW METER ASS'Y			6
1	157094-1	RING ASSEMBLY			5
1	157119-1	FLOWMETER SPOOL			4
1	157122-4	INSTRUMENTED RING ASS'Y			3
1	157116-1	EXTENSION SPOOL			2
—	—	ASSEMBLY			1
QTY	PART NO	DESCRIPTION	MATERIAL / SPECIFICATION		

PARTS LIST

SPOOL ASSEMBLY, INSTRUMENTED, HORIZONTAL - 115 PSI

157088

SI METRIC

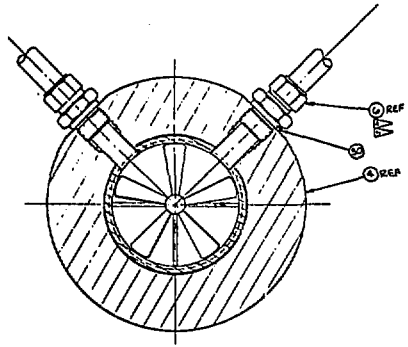

SECTION A-A

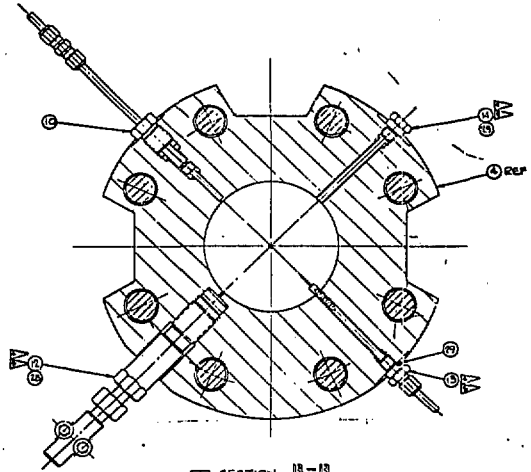

SECTION B-B

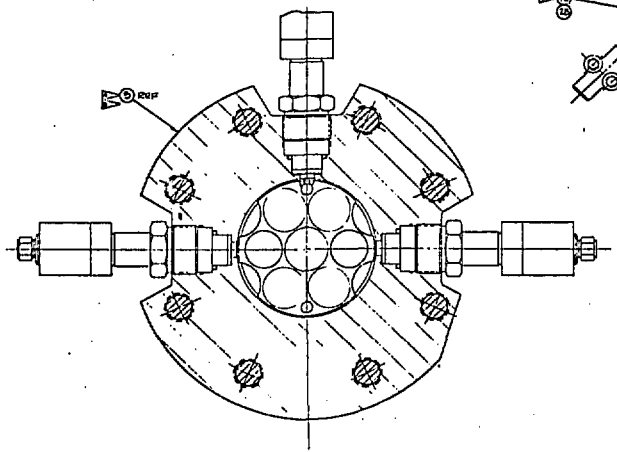

SECTION C-C

NOTES:

1. TORQUE BOLT ITEM 55 TO (225 FT/LB) 295 KILOGRAM-METER.
2. REFERENCE RADIOISOTOPE SOURCE, ITEMS 16,17 & 18, CHECKOUT, HANDLING AND INSTALLATION PROCEDURE FOR PRL INSTRUMENTED SPOOLS PER GA (A SPEC MES-002.
3. TORQUE PLUG ITEM 19 TO (100 FT/LB) 150 KILOGRAM-METER.
4. TORQUE ITEMS AS FOLLOWS:

ITEM 19	FLUID TEMP PROBE	5.5 K-M
ITEM 14	PLUG PIN ASS'Y	5.5 K-M
ITEM 24	CONNECTOR	4.5 K-M
ITEM 15	PRESSURE PROBE	40.0 K-M
ITEM 6	PICKOFF	20.0 K-M
ITEM 4	INSTRUMENTED RING ASS'Y (DRM TRANSDUCER)	50.0 K-M

5. LUBRICATE ALL ITEMS TO BE TORQUED WITH SILVER GOOP, GRAPHITED FITTING EQ OR EQUAL.
6. REFERENCE DRAWINGS:

SPOOL PRLS COMPONENTS	157065-1
ARMATURE FIXTURE	157164-1 E-4
LIFTING FIXTURE	157104-1
SOURCE HANDLING TOOL ASS'Y	157152-1
GASKET	157154-1 E
JUNCTION BOX ASS'Y	157119-1
SOURCE LOCKING TOOL	157151-1
WIRING DIAGRAM	157199

| | | |

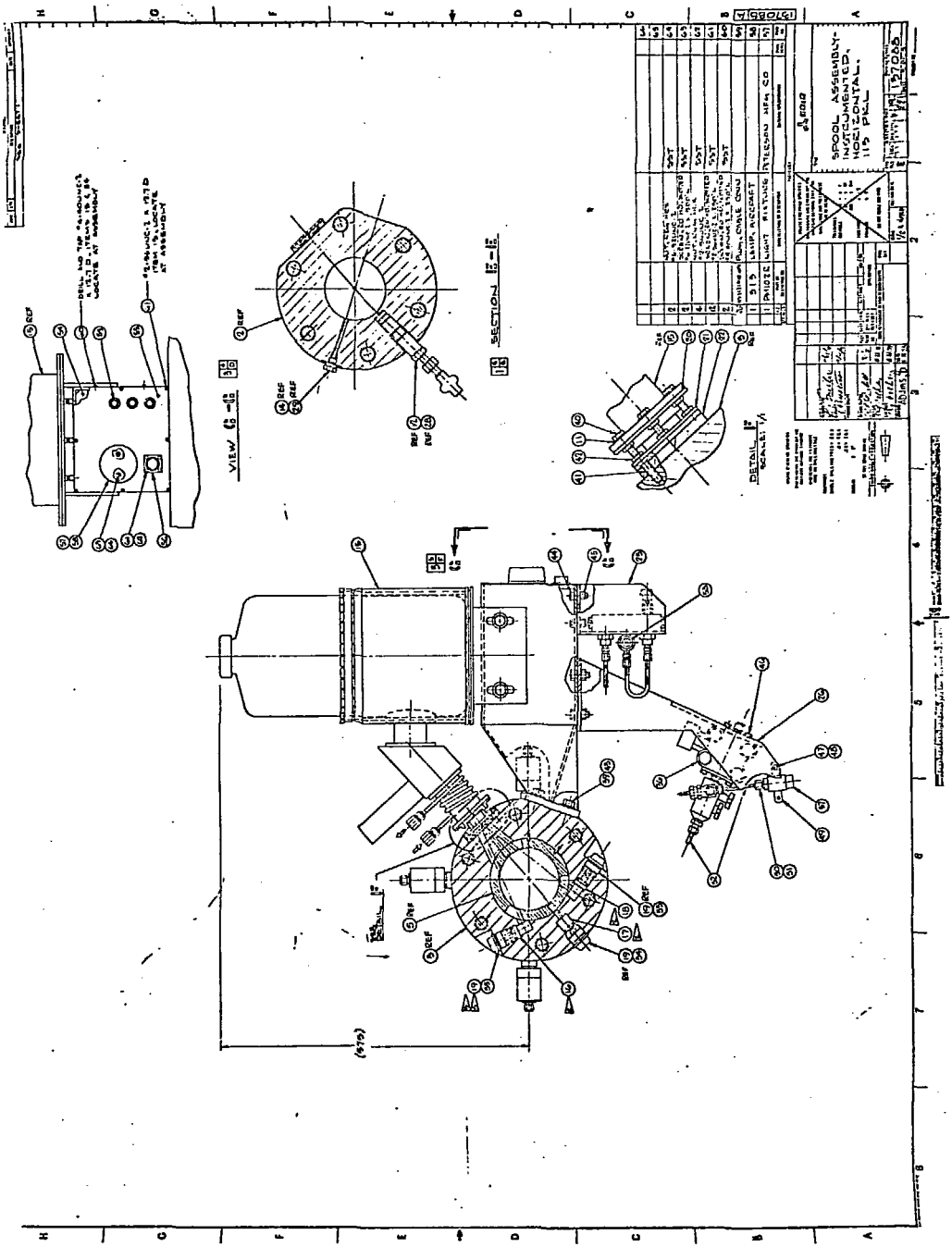
SPOOL ASSEMBLY-
INSTRUMENTED,
HORIZONTAL,
115 PKL
VIEW
SECTION
DETAIL
SCALE 1/1

APPENDIX B

PKL SPOOL PIECE TEST RESULTS DATA

APPENDIX B

Data obtained from PKL acceptance tests are presented in this appendix. For each of the tests, one spool was tested at a time and the data channels were scanned at 10-s intervals.

The date of each test is shown in the heading of the data printout. The test sequence number is given in the heading for each test and identified as "RUN NO." Also identified and repeated for each 10-s interval is the number of the spool tested (i.e., 1, 2, 3, or 4). Two lines of data are printed out by the DAS for each 10-s interval starting at time equal to zero. The time in seconds from the start of the test is printed at the left of each data line. The first line of data presents primarily engineering unit data and the second line presents primarily calculated parameters. Headings for the data in each line are printed out only for the initial set of data lines. For subsequent 10-s intervals, the letters E or A are printed to the left and right of each data line. The letter E identifies the line containing primarily engineering unit data. The letter A identifies the line containing calculated parameters.

Identification of abbreviations and symbols used in the printout is given below:

TW	= spool wall temperature
TF	= fluid temperature
TS	= steam temperature (spool no. 4 only)
PA	= fluid pressure
PD	= differential pressure across the drag screen
DTT	= momentum flux
DF1, DF2, DF3	= drag force sensed by drag screen transducers nos. 1, 2, and 3, respectively
GD1, GD2, GD3	= density along densitometer beam nos. 1, 2, and 3, respectively

FTW	= turbine meter velocity obtained from a turbine water calibration
FTA	= turbine meter velocity obtained from a turbine air calibration
RHOF	= average pipe cross sectional density obtained from densitometer beam readings
VOID	= fluid void fraction
MAFT	= total water mass flow rate based on a calculation using values of RHOF and FTW for density and velocity
WATER-DENS	= density of the water phase
WATER-VEL	= water velocity based on equation (20)
WATER-MAFW	= water total mass flow rate based on equation (19)

In calculations of the average pipe cross-sectional density (RHOF) in subcooled water flows, the readings from densitometer beam no. 3 (DB3) are not used. The upper range of density that this beam can measure is 44.3 kg/m, and this value is printed out whenever densities along this beam exceed its upper range.

For tests involving spool nos. 2 and 3, the densitometer was not in operation due to an equipment failure and the data presented represents values due to a dummy input signal.

WS/ar/LSM #5

ENGINEERING UNITS CONVERSION RESULTS

DATE 27-JUN-79 RUN NO. 5

TIME (SEC)	TW	TF	TS	PA	PD	DT1	DF1	DF2	DF3	GD1	GD2	GD3	FLOWS
	(DEG. CELSIUS)			(KPA)	(KPA)	(KG/M*SEC**2)		(KG-M/SEC**2)				(KG/MS)	
SPOOL 1													
0.00E	29.13	31.75	0.00	695.75	0.000	98.7	0.027	0.052	-0.000	1001.100	969.161	44.300E	

ANALYSIS OF DATA

TIME (SEC)	FLUID TEMP (CEL)	TURB VELOCITY FTW (M/SEC)	TURB VELOCITY FTA (M/SEC)	RHOF (KG/M**3)	VOID	MAFT (KG/SEC)	WATER DENS (KG/M**3)	WATER VEL (M/SEC)	WATER MAFW (KG/SEC)	STEAM DENS (KG/M**3)	STEAM VEL (M/SEC)	STEAM MAFW (KG/SEC)	
0.00A	31.75	0.296	0.312	983.250	0.000	1.495	993.778	0.315	1.606	0.000	0.000	0.000	A WTR
SPOOL 1													
10.00E	29.13	31.75	0.00	695.75	0.000	92.3	0.027	0.054	-0.007	1001.100	969.161	44.300E	
10.00A	31.75	0.296	0.312	983.250	0.000	1.495	993.778	0.305	1.533	0.000	0.000	0.000	A WTR
SPOOL 1													
20.00E	29.13	31.75	0.00	695.75	0.000	98.7	0.027	0.052	-0.000	1001.100	969.161	44.300E	
20.00A	31.75	0.296	0.312	983.250	0.000	1.495	993.778	0.315	1.606	0.000	0.000	0.000	A WTR
SPOOL 1													
30.00E	29.27	31.75	0.00	695.75	0.000	99.0	0.027	0.053	-0.004	1001.100	969.161	44.300E	
30.00A	31.75	0.267	0.278	983.250	0.000	1.345	993.778	0.316	1.609	0.000	0.000	0.000	A WTR
SPOOL 1													
40.00E	29.42	32.04	0.00	695.75	0.000	92.3	0.027	0.054	-0.007	1001.100	969.161	44.300E	
40.00A	32.04	0.296	0.312	983.250	0.000	1.495	993.685	0.305	1.533	0.000	0.000	0.000	A WTR
SPOOL 1													
50.00E	29.27	31.90	0.00	695.75	0.000	94.3	0.027	0.052	-0.004	1001.100	969.161	44.300E	
50.00A	31.90	0.296	0.312	983.250	0.000	1.495	993.732	0.308	1.570	0.000	0.000	0.000	A WTR

```
SPOOL  1
  60.00E  29.42   32.04    0.00   695.75   0.000     92.3    0.027    0.054   -0.007 1001.100  969.161   44.300F

  60.00A  32.04    0.296    0.312  983.250 0.000    1.495   993.685    0.305    1.553     0.000     0.000     0.000 A WTR

SPOOL  1
  70.00E  29.42   32.04    0.00   695.75   0.000     99.0    0.027    0.055   -0.004 1001.100  985.064   44.300E

  70.00A  32.04    0.296    0.312  992.137 0.000    1.508   993.685    0.316    1.608     0.000     0.000     0.000 A WTR

SPOOL  1
  80.00E  29.42   32.04    0.00   695.75   0.000     94.5    0.026    0.054   -0.004 1001.100  969.161   44.300F

  80.00A  32.04    0.296    0.312  983.250 0.000    1.495   993.685    0.308    1.571     0.000     0.000     0.000 A WTR

SPOOL  1
  90.00E  29.71   32.04    0.00   695.75  -0.202    798.7    0.380    0.366   -0.025 1001.100  976.965   44.300E

  90.00A  32.04    0.891    1.008  987.611 0.000    4.511   993.685    0.897    4.568     0.000     0.000     0.000 A WTR

SPOOL  1
 100.00E  30.00   32.19    0.00   695.75  -0.111    594.8    0.255    0.293   -0.028 1001.100  969.161   44.300F

 100.00A  32.19    0.772    0.869  983.250 0.000    3.892   993.639    0.774    3.942     0.000     0.000     0.000 A WTR

SPOOL  1
 110.00E  30.29   32.34    0.00   695.75  -0.121    655.9    0.286    0.301   -0.007 1001.100  969.161   44.300F

 110.00A  32.34    0.802    0.904  983.250 0.000    4.042   993.592    0.812    4.139     0.000     0.000     0.000 A WTR

SPOOL  1
 120.00E  30.29   32.04    0.00   695.75  -0.121    670.2    0.299    0.331   -0.035 1001.100  969.161   44.300F

 120.00A  32.04    0.831    0.939  983.250 0.000    4.192   993.685    0.821    4.184     0.000     0.000     0.000 A WTR

SPOOL  1
 130.00E  30.29   32.04    0.00   695.75  -0.121    687.3    0.292    0.327   -0.007 1001.100  969.161   44.300F

 130.00A  32.04    0.802    0.904  983.250 0.000    4.042   993.685    0.832    4.237     0.000     0.000     0.000 A WTR

SPOOL  1
 140.00E  30.29   32.04    0.00   695.75  -0.121    673.0    0.292    0.322   -0.021 1001.100  969.161   44.300F
```

140.00A	32.04	0.831	0.939	983.250	0.000	4.192	993.685	0.823	4.193	0.000	0.000	0.000	A	WTR
SPOOL 1														
150.00E	30.29	32.04	0.00	695.75	-0.121	679.7	0.299	0.319	-0.014	1001.100	976.965	44.300F		
150.00A	32.04	0.802	0.904	987.611	0.000	4.060	993.685	0.827	4.214	0.000	0.000	0.000	A	WTR
SPOOL 1														
160.00E	30.29	32.19	0.00	695.75	-0.121	685.1	0.296	0.321	-0.007	1001.100	969.161	44.300F		
160.00A	32.19	0.831	0.939	983.250	0.000	4.192	993.639	0.830	4.231	0.000	0.000	0.000	A	WTR
SPOOL 1														
170.00E	30.29	32.19	0.00	695.75	-0.121	699.7	0.303	0.319	0.002	1001.100	985.064	44.300F		
170.00A	32.19	0.831	0.939	992.137	0.000	4.229	993.639	0.839	4.276	0.000	0.000	0.000	A	WTR
SPOOL 1														
180.00E	30.44	32.34	0.00	695.75	-0.121	678.9	0.299	0.311	-0.007	1001.100	976.965	44.300F		
180.00A	32.34	0.831	0.939	987.611	0.000	4.210	993.592	0.827	4.211	0.000	0.000	0.000	A	WTR
SPOOL 1														
190.00E	30.44	32.34	0.00	695.75	-0.125	680.8	0.288	0.315	0.002	1001.100	969.161	44.300F		
190.00A	32.34	0.802	0.904	983.250	0.000	4.042	993.592	0.828	4.217	0.000	0.000	0.000	A	WTR
SPOOL 1														
200.00E	30.44	32.34	0.00	695.75	-0.135	677.3	0.299	0.313	-0.011	1001.100	1001.100	44.300F		
200.00A	32.34	0.831	0.939	1001.099	0.000	4.268	993.592	0.826	4.206	0.000	0.000	0.000	A	WTR
SPOOL 1														
210.00E	30.59	32.34	0.00	695.75	-0.175	926.6	0.425	0.454	-0.032	1001.100	969.161	44.300F		
210.00A	32.34	0.950	1.078	983.250	0.000	4.791	993.592	0.966	4.920	0.000	0.000	0.000	A	WTR
SPOOL 1														
220.00E	30.59	32.34	0.00	695.75	-0.202	1015.2	0.464	0.491	-0.021	1001.100	969.161	44.300F		

220.00A	32.34	1.010	1.147	983.250	0.000	5.091	993.592	1.011	5.150	0.000	0.000	0.000	A WTR
SPOOL 1													
230.00E	30.73	32.34	0.00	695.75	-0.310	1519.0	0.714	0.704	-0.042	1001.100	969.161	44.300F	
230.00A	32.34	1.218	1.391	983.250	0.000	6.140	993.592	1.236	6.299	0.000	0.000	0.000	A WTR
SPOOL 1													
240.00E	30.73	32.34	0.00	695.75	-0.553	2559.6	1.272	1.261	-0.092	1001.100	961.630	44.300E	
240.00A	32.34	1.604	1.843	979.042	0.000	8.053	993.592	1.605	8.177	0.000	0.000	0.000	A WTR
SPOOL 1													
250.00E	30.73	32.19	0.00	695.75	-0.768	3618.2	1.759	1.712	-0.007	1001.100	985.064	44.300F	
250.00A	32.19	1.872	2.130	992.137	0.000	9.522	993.639	1.908	9.722	0.000	0.000	0.000	A WTR
SPOOL 1													
260.00E	30.59	32.19	0.00	695.75	-1.109	5236.2	2.571	2.541	-0.042	1001.100	969.161	44.300F	
260.00A	32.19	2.288	2.559	983.250	0.000	11.535	993.639	2.296	11.696	0.000	0.000	0.000	A WTR
SPOOL 1													
270.00E	30.59	32.34	0.00	695.75	-1.496	7158.9	3.520	3.555	-0.144	1001.100	976.965	44.300F	
270.00A	32.34	2.674	2.955	987.611	0.000	13.543	993.592	2.684	13.675	0.000	0.000	0.000	A WTR
SPOOL 1													
280.00E	30.73	32.34	0.00	695.75	-1.520	7178.3	3.535	3.520	-0.106	1001.100	969.161	44.300F	
280.00A	32.34	2.674	2.955	983.250	0.000	13.483	993.592	2.688	13.694	0.000	0.000	0.000	A WTR
SPOOL 1													
290.00E	30.59	32.34	0.00	695.75	-1.452	6919.1	3.422	3.445	-0.176	1001.100	969.161	44.300E	
290.00A	32.34	2.615	2.894	983.250	0.000	13.184	993.592	2.639	13.444	0.000	0.000	0.000	A WTR
SPOOL 1													
300.00E.	30.73	32.34	0.00	695.75	-1.476	7040.0	3.429	3.488	-0.106	1001.100	969.161	44.300F	
300.00A	32.34	2.615	2.894	983.250	0.000	13.184	993.592	2.642	13.561	0.000	0.000	0.000	A WTR

```
SPOOL  1
  310.00E  30.73   32.63    0.00   695.75  -1.483   6978.3   3.405   3.520  -0.176 1001.100  969.161   44.300F

  310.00A  32.63    2.615    2.894  983.250 0.000   13.184  993.498    2.650   13.501       0.000     0.000     0.000 A WTR

SPOOL  1
  320.00E  30.88   32.63    0.00   695.75  -1.483   7099.7   3.444   3.480  -0.053 1001.100  969.161   44.300F

  320.00A  32.63    2.615    2.894  983.250 0.000   13.184  993.498    2.673   13.618       0.000     0.000     0.000 A WTR

SPOOL  1
  330.00E  30.88   32.63    0.00   695.75  -1.457   6882.5   3.440   3.378  -0.162 1001.100  969.161   44.300F

  330.00A  32.63    2.585    2.864  983.250 0.000   13.034  993.498    2.632   13.408       0.000     0.000     0.000 A WTR

SPOOL  1
  340.00E  30.88   32.63    0.00   695.75  -1.489   7111.7   3.509   3.437  -0.063 1001.100  969.161   44.300F

  340.00A  32.63    2.615    2.894  983.250 0.000   13.184  993.498    2.675   13.630       0.000     0.000     0.000 A WTR

SPOOL  1
  350.00E  31.02   32.63    0.00   695.75  -1.489   6899.1   3.437   3.020  -0.286 1001.100  976.965   44.300F

  350.00A  32.63    2.645    2.925  987.611 0.000   13.393  993.498    2.635   13.424       0.000     0.000     0.000 A WTR

SPOOL  1
  360.00E  31.17   32.63    0.00   695.75  -1.476   7069.0   3.485   3.467  -0.113 1001.100  969.161   44.300F

  360.00A  32.63    2.615    2.894  983.250 0.000   13.184  993.498    2.667   13.589       0.000     0.000     0.000 A WTR

SPOOL  1
  370.00E  31.02   32.63    0.00   695.75  -1.496   7010.3   3.487   3.498  -0.204 1001.100  969.161   44.300F

  370.00A  32.63    2.615    2.894  983.250 0.000   13.184  993.498    2.656   13.532       0.000     0.000     0.000 A WTR

SPOOL  1
  380.00E  31.46   32.63    0.00   695.75  -1.503   7229.1   3.583   3.463  -0.046 1001.100  969.161   44.300F

  380.00A  32.63    2.615    2.894  983.250 0.000   13.184  993.498    2.697   13.742       0.000     0.000     0.000 A WTR
```

```
SPOOL  1
  390.00E  31.46   32.63    0.00    695.75   -1.489    7043.0    3.527    3.463   -0.176 1001.100  976.965   44.300F

  390.00A  32.63    2.615    2.894   987.611 0.000    13.242   993.498    2.663   13.564    0.000    0.000    0.000 A WTR

SPOOL  1
  400.00E  31.46   32.63    0.00    695.75   -1.503    7125.3    3.583    3.461   -0.148 1001.100  969.161   44.300F

  400.00A  32.63    2.615    2.894   983.250 0.000    13.184   993.498    2.678   13.643    0.000    0.000    0.000 A WTR

SPOOL  1
  410.00E  31.46   32.77    0.00    695.75   -0.977    4685.3    2.269    2.285   -0.032 1001.100  969.161   44.300F

  410.00A  32.77    2.139    2.406   983.250 0.000    10.786   993.451    2.172   11.063    0.000    0.000    0.000 A WTR

SPOOL  1
  420.00E  31.46   32.92    0.00    695.75   -0.674    3152.8    1.600    1.622   -0.208 1001.100  976.965   44.300F

  420.00A  32.92    1.783    2.037   987.611 0.000     9.027   993.404    1.782    9.075    0.000    0.000    0.000 A WTR

SPOOL  1
  430.00E  31.46   32.92    0.00    695.75   -0.398    2002.2    0.949    0.995   -0.046 1001.100  985.064   44.300F

  430.00A  32.92    1.396    1.600   992.137 0.000     7.103   993.404    1.420    7.232    0.000    0.000    0.000 A WTR

SPOOL  1
  440.00E  31.46   33.07    0.00    695.75   -0.357    1675.1    0.876    0.844   -0.092 1001.100  969.161   44.300F

  440.00A  33.07    1.277    1.460   983.250 0.000     6.440   993.356    1.299    6.614    0.000    0.000    0.000 A WTR

SPOOL  1
  450.00E  31.61   33.07    0.00    695.75   -0.246    1201.5    0.567    0.556   -0.007 1001.100  969.161   44.300F

  450.00A  33.07    1.069    1.217   983.250 0.000     5.390   993.356    1.100    3.602    0.000    0.000    0.000 A WTR

SPOOL  1
  460.00E  31.46   33.21    0.00    695.75   -0.202    1018.7    0.486    0.515   -0.063 1001.100  976.965   44.300F

  460.00A  33.21    1.010    1.147   987.611 0.000     5.113   993.309    1.013    3.158    0.000    0.000    0.000 A WTR

SPOOL  1
  470.00E  31.41   33.21    0.00    695.75   -0.199    970.9    0.447    0.450    0.002 1001.100  969.161   44.300F
```

470.00A	33.21	0.950	1.078	983.250	0.000	4.791	993.309	0.993	5.058	0.000	0.000	0.000	A WTR
SPOOL 1													
480.00E	31.75	33.36	0.00	695.75	-0.081	654.8	0.262	0.311	0.006	1001.100	969.161	44.300F	
480.00A	33.36	0.772	0.869	983.250	0.000	3.892	993.261	0.812	4.135	0.000	0.000	0.000	A WTR
SPOOL 1													
490.00E	31.75	33.50	0.00	695.75	-0.128	709.3	0.307	0.327	-0.000	1001.100	969.161	44.300F	
490.00A	33.50	0.831	0.939	983.250	0.000	4.192	993.213	0.845	4.304	0.000	0.000	0.000	A WTR
SPOOL 1													
500.00E	31.75	33.50	0.00	695.75	-0.121	705.5	0.310	0.323	-0.004	1001.100	969.161	44.300F	
500.00A	33.50	0.831	0.939	983.250	0.000	4.192	993.213	0.843	4.292	0.000	0.000	0.000	A WTR
SPOOL 1													
510.00E	31.75	33.79	0.00	695.75	-0.131	705.8	0.299	0.321	-0.000	1001.100	969.161	44.300F	
510.00A	33.79	0.831	0.939	983.250	0.000	4.192	993.117	0.843	4.293	0.000	0.000	0.000	A WTR
SPOOL 1													
520.00E	31.90	33.79	0.00	695.75	-0.131	709.3	0.307	0.327	-0.000	1001.100	969.161	44.300F	
520.00A	33.79	0.831	0.939	983.250	0.000	4.192	993.117	0.845	4.304	0.000	0.000	0.000	A WTR
SPOOL 1													
530.00E	31.90	33.79	0.00	695.75	-0.121	692.3	0.307	0.334	-0.0[illegible]	1001.100	969.161	44.300F	
530.00A	33.79	0.831	0.939	983.250	0.000	4.192	993.117	0.845	4.302	0.000	0.000	0.000	A WTR
SPOOL 1													
540.00E	31.90	33.79	0.00	695.75	-0.131	719.1	0.307	0.346	-0.007	1001.100	969.161	44.300F	
540.00A	33.79	0.831	0.939	983.250	0.000	4.192	993.117	0.847	4.312	0.000	0.000	0.000	A WTR
SPOOL 1													
550.00E	32.04	33.79	0.00	695.75	-0.131	696.8	0.321	0.344	-0.046	1001.100	993.480	44.300F	

550.00A	33.79	0.831	0.939	996.841	0.000	4.249	993.117	0.847	4.267	0.000	0.000	0.000	A WTR

SPOOL 1

560.00E	32.04	33.79	0.00	695.75	-0.131	701.0	0.307	0.588	-0.014	1001.100	969.064	44.300E	
560.00A	33.79	0.831	0.939	992.137	0.000	4.229	993.117	0.840	4.278	0.000	0.000	0.000	A WTR

SPOOL 1

570.00E	32.04	33.79	0.00	695.75	0.014	7.8	-0.008	0.018	-0.004	1001.100	969.161	44.300E	
570.00A	33.79	-0.000	-0.036	983.250	0.000	-0.002	993.117	0.086	0.436	0.000	0.000	0.000	A WTR

SPOOL 1

580.00E	31.75	33.79	0.00	695.75	0.000	108.0	0.033	0.067	-0.004	1001.100	969.161	44.300E	
580.00A	33.79	0.296	0.312	983.250	0.000	1.495	993.117	0.330	1.679	0.000	0.000	0.000	A WTR

SPOOL 1

590.00E	31.75	33.79	0.00	695.75	0.000	80.7	0.020	0.048	0.004	1001.100	969.064	44.300E	
590.00A	33.79	0.237	0.243	992.137	0.000	1.206	993.117	0.285	1.452	0.000	0.000	0.000	A WTR

SPOOL 1

600.00E	31.75	33.79	0.00	695.75	0.000	80.7	0.020	0.048	0.004	1001.100	969.161	44.300E	
600.00A	33.79	0.237	0.243	983.250	0.000	1.195	993.117	0.285	1.452	0.000	0.000	0.000	A WTR

SPOOL 1

610.00E	31.90	33.79	0.00	695.75	0.000	80.7	0.020	0.048	-0.004	1001.100	969.161	44.300E	
610.00A	33.79	0.237	0.243	983.250	0.000	1.195	993.117	0.285	1.452	0.000	0.000	0.000	A WTR

SPOOL 1

620.00E	31.90	33.79	0.00	695.75	0.000	80.7	0.020	0.048	-0.004	1001.100	969.161	44.300E	
620.00A	33.79	0.237	0.243	983.250	0.000	1.195	993.117	0.285	1.452	0.000	0.000	0.000	A WTR

SPOOL 1

630.00E	32.04	33.79	0.00	695.75	0.000	78.4	0.020	0.046	-0.004	1001.100	976.965	44.300E	
630.00A	33.79	0.267	0.278	987.611	0.000	1.301	993.117	0.281	1.430	0.000	0.000	0.000	A WTR

SPOOL 1														
640.00E	31.90	33.79	0.00	695.75	0.000	76.0	0.020	0.044	-0.004	1001.100	976.965	44.300E		
640.00A	33.79	0.267	0.278	987.611	0.000	1.351	993.117	0.277	1.409	0.000	0.000	0.000	A	WIR
SPOOL 1														
650.00E	32.63	34.23	0.00	695.75	-0.195	985.0	0.440	0.477	-0.007	1001.100	969.161	44.300E		
650.00A	34.23	0.980	1.113	983.250	0.000	4.941	992.973	0.996	5.071	0.000	0.000	0.000	A	WIR
SPOOL 1														
660.00E	32.63	34.38	0.00	695.75	-0.256	1320.6	0.606	0.674	0.007	1001.100	969.161	44.300E		
660.00A	34.38	1.129	1.286	983.250	0.000	5.690	992.924	1.153	5.872	0.000	0.000	0.000	A	WIR
SPOOL 1														
670.00E	32.63	34.09	0.00	695.75	-0.465	2141.7	1.029	1.034	-0.028	1001.100	993.480	44.300E		
670.00A	34.09	1.456	1.669	996.841	0.000	7.440	993.021	1.468	7.478	0.000	0.000	0.000	A	WIR
SPOOL 1														
680.00E	32.63	33.94	0.00	695.75	-0.620	2969.8	1.434	1.439	-0.050	1001.100	969.161	44.300E		
680.00A	33.94	1.723	1.976	983.250	0.000	8.688	993.069	1.729	8.806	0.000	0.000	0.000	A	WIR
SPOOL 1														
690.00E	32.63	33.94	0.00	695.75	-0.896	4217.2	2.111	2.024	-0.063	1001.100	969.161	44.300E		
690.00A	33.94	2.020	2.283	983.250	0.000	10.186	993.069	2.061	10.453	0.000	0.000	0.000	A	WIR
SPOOL 1														
700.00E	32.63	33.79	0.00	695.75	-1.381	6586.6	3.196	3.293	-0.130	1001.100	993.480	44.300E		
700.00A	33.79	2.526	2.803	996.841	0.000	12.910	993.117	2.575	13.114	0.000	0.000	0.000	A	WIR
SPOOL 1														
710.00E	32.63	33.79	0.00	695.75	-1.429	6833.3	3.315	3.366	-0.113	1001.100	969.161	44.300E		
710.00A	33.79	2.555	2.833	983.250	0.000	12.884	993.117	2.623	13.358	0.000	0.000	0.000	A	WIR

SPOOL 1

720.00E	32.63	33.79	0.00	695.75	-1.523	7276.4	3.564	3.492	0.007	1001.100	969.161	44.300E	
720.00A	33.79	2.645	2.925	983.250	0.000	13.333	993.117	2.707	13.784	0.000	0.000	0.000	A WTR

SPOOL 1

730.00E	32.63	33.94	0.00	695.75	-1.536	7241.5	3.583	3.502	-0.088	1001.100	969.161	44.300E	
730.00A	33.94	2.645	2.925	983.250	0.000	13.333	993.069	2.701	13.754	0.000	0.000	0.000	A WTR

SPOOL 1

740.00E	32.63	34.38	0.00	695.75	-1.513	7304.6	3.601	3.525	-0.049	1001.100	969.161	44.300E	
740.00A	34.38	2.674	2.955	983.250	0.000	13.483	992.924	2.722	13.856	0.000	0.000	0.000	A WTR

SPOOL 1

750.00E	32.63	33.94	0.00	695.75	-1.489	7149.1	3.529	3.494	0.102	1001.100	969.161	44.300E	
750.00A	33.94	2.645	2.925	983.250	0.000	13.333	993.069	2.683	13.662	0.000	0.000	0.000	A WTR

SPOOL 1

760.00E	32.63	34.09	0.00	695.75	-1.533	7277.6	3.597	3.520	-0.078	1001.100	969.161	44.300E	
760.00A	34.09	2.645	2.925	983.250	0.000	13.333	993.021	2.707	13.784	0.000	0.000	0.000	A WTR

SPOOL 1

770.00E	32.77	34.09	0.00	695.75	-1.516	7371.5	3.592	3.559	-0.007	1001.100	969.161	44.300E	
770.00A	34.09	2.645	2.925	983.250	0.000	13.333	993.021	2.725	13.873	0.000	0.000	0.000	A WTR

ENGINEERING UNITS CONVERSION RESULTS

DATE 28-JUN-79 RUN NO. 6

TIME (SEC)	TW	TF (DEG. CELSIUS)	TS	PA (KPA)	PD (KPA)	DTT (KG/M*SEC**2)	DF1	DF2 (KG-M/SEC**2)	DF3	GDT	GD	GDS (KG/M3)	FLAGS
SPOOL 1													
10.00E	27.38	31.46	0.00	695.75	0.003	69.3	0.011	0.044	-0.000	1001.100	969.161	44.300F	

ANALYSIS OF DATA

TIME (SEC)	FLUID TEMP (CEL)	TURB VELOCITY FTW (M/SEC)	FTA (M/SEC)	RHOF (KG/M**3)	VOID	MAFT (KG/SEC)	WATER DENS (KG/M**3)	WATER VEL (M/SEC)	WATER MAFW (KG/SEC)	STEAM DENS (KG/M**3)	STEAM VEL (M/SEC)	STEAM MAFW (KG/SEC)	
10.00A	31.46	0.296	0.312	983.250	0.000	1.495	993.871	0.264	1.346	0.000	0.000	0.000	A WTR
SPOOL 1													
20.00E	25.92	31.46	0.00	695.75	0.000	73.9	0.015	0.042	0.002	1001.100	1001.100	44.300F	
20.00A	31.46	0.296	0.312	1001.099	0.000	1.522	993.871	0.273	1.390	0.000	0.000	0.000	A WTR
SPOOL 1													
30.00E	26.94	31.75	0.00	695.75	0.000	76.3	0.013	0.048	-0.000	1001.100	1001.100	44.300F	
30.00A	31.75	0.296	0.312	1001.099	0.000	1.522	993.778	0.277	1.412	0.000	0.000	0.000	A WTR
SPOOL 1													
40.00E	28.54	32.04	0.00	695.75	0.000	76.3	0.017	0.048	-0.004	1001.100	1001.100	44.300F	
40.00A	32.04	0.237	0.243	1001.099	0.000	1.217	993.685	0.277	1.412	0.000	0.000	0.000	A WTR
SPOOL 1													
50.00E	26.79	32.04	0.00	695.75	0.000	80.7	0.017	0.048	-0.000	1001.100	1001.100	44.300F	
50.00A	32.04	0.267	0.278	1001.099	0.000	1.369	993.685	0.285	1.452	0.000	0.000	0.000	A WTR
SPOOL 1													
60.00E	30.59	32.63	0.00	695.75	0.003	76.0	0.017	0.044	-0.000	1001.100	1001.100	44.300F	
60.00A	32.63	0.207	0.208	1001.099	0.000	1.065	993.498	0.277	1.409	0.000	0.000	0.000	A WTR

SPOOL 1

70.00E	29.71	32.77	0.00	695.75	-0.168	868.8	0.297	0.417	-0.008	1001.100	1001.100	44.300F	
70.00A	32.77	0.950	1.078	1001.099	0.000	4.878	993.451	0.932	4.750	0.000	0.000	0.000	A WTR

SPOOL 1

80.00E	28.54	32.92	0.00	695.75	-0.088	504.3	0.205	0.285	-0.007	995.064	1001.100	44.300F	
80.00A	32.92	0.712	0.799	998.436	0.000	3.648	993.404	0.714	3.637	0.000	0.000	0.000	A WTR

SPOOL 1

90.00E	31.75	33.21	0.00	695.75	-0.111	631.1	0.262	0.282	0.012	1001.100	1001.100	44.300F	
90.00A	33.21	0.802	0.904	1001.099	0.000	4.115	993.309	0.797	4.060	0.000	0.000	0.000	A WTR

SPOOL 1

100.00E	30.29	32.92	0.00	695.75	-0.128	670.6	0.299	0.317	-0.021	1001.100	1001.100	44.300F	
100.00A	32.92	0.831	0.939	1001.099	0.000	4.268	993.404	0.822	4.183	0.000	0.000	0.000	A WTR

SPOOL 1

110.00E	29.13	32.92	0.00	695.75	-0.121	675.2	0.296	0.329	-0.035	970.206	1001.100	44.300F	
110.00A	32.92	0.831	0.939	987.470	0.000	4.210	993.404	0.824	4.199	0.000	0.000	0.000	A WTR

SPOOL 1

120.00E	32.48	32.92	0.00	695.75	-0.121	698.1	0.296	0.327	-0.000	1001.100	1001.100	44.300F	
120.00A	32.92	0.831	0.939	1001.099	0.000	4.288	993.404	0.838	4.270	0.000	0.000	0.000	A WTR

SPOOL 1

130.00E	31.75	32.92	0.00	695.75	-0.121	679.2	0.294	0.317	-0.007	1001.100	995.064	44.300F	
130.00A	32.92	0.891	1.008	992.137	0.000	4.532	993.404	0.827	4.212	0.000	0.000	0.000	A WTR

SPOOL 1

140.00E	32.04	33.07	0.00	695.75	-0.121	690.8	0.299	0.323	-0.007	1001.100	1001.100	44.300F	
140.00A	33.07	0.742	0.834	1001.099	0.000	3.810	993.356	0.834	4.248	0.000	0.000	0.000	A WTR

SPOOL 1

150.00E	32.62	32.92	0.00	695.75	-0.121	675.1	0.296	0.311	-0.007	1001.100	1001.100	44.300F	

150.00A	32.92	0.831	0.939	1001.099	0.000	4.268	993.404	0.824	4.199	0.000	0.000	0.000	A	WTR
SPOOL 1														
160.00E	29.42	33.07	0.00	695.75	-0.121	681.4	0.290	0.323	-0.007	995.064	1001.100	44.300F		
160.00A	33.07	0.831	0.939	998.436	0.000	4.256	993.356	0.828	4.219	0.000	0.000	0.000	A	WTR
SPOOL 1														
170.00E	28.54	32.92	0.00	695.75	-0.121	687.8	0.296	0.331	-0.014	1001.100	1001.100	44.300F		
170.00A	32.92	0.772	0.869	1001.099	0.000	3.962	993.404	0.832	4.139	0.000	0.000	0.000	A	WTR
SPOOL 1														
180.00E	28.25	33.07	0.00	695.75	-0.125	692.8	0.292	0.329	-0.004	1001.100	1001.100	44.300F		
180.00A	33.07	0.861	0.973	1001.099	0.000	4.420	993.356	0.835	4.254	0.000	0.000	0.000	A	WTR
SPOOL 1														
190.00E	28.69	33.07	0.00	695.75	-0.175	959.7	0.427	0.460	-0.007	1001.100	1001.100	44.300F		
190.00A	33.07	1.010	1.147	1001.099	0.000	5.183	993.356	0.983	5.007	0.000	0.000	0.000	A	WTR
SPOOL 1														
200.00E	30.00	33.21	0.00	695.75	-0.236	1173.7	0.550	0.574	-0.035	1001.100	1001.100	44.300F		
200.00A	33.21	1.129	1.286	1001.099	0.000	5.794	993.309	1.087	5.537	0.000	0.000	0.000	A	WTR
SPOOL 1														
210.00E	33.07	33.07	0.00	695.75	-0.445	2128.5	1.015	1.020	-0.014	1001.100	1001.100	44.300F		
210.00A	33.07	1.426	1.634	1001.099	0.000	7.319	993.356	1.464	7.456	0.000	0.000	0.000	A	WTR
SPOOL 1														
220.00E	33.07	33.07	0.00	695.75	-0.815	3945.1	1.862	1.950	-0.018	1001.100	1001.100	44.300F		
220.00A	33.07	1.931	2.191	1001.099	0.000	9.913	993.356	1.993	10.151	0.000	0.000	0.000	A	WTR
SPOOL 1														
230.00E	32.92	33.07	0.00	695.75	-1.478	6557.6	3.231	3.231	-0.120	1001.100	1001.100	44.300F		

230.00A	33.07	2.555	2.833	1001.099	0.000	13.118	993.356	2.569	13.087	0.000	0.000	0.000	A WTR
SPOOL 1													
240.00E	29.86	32.92	0.00	695.75	-1.496	7023.4	3.540	3.520	-0.266	1001.100	1001.100	44.300E	
240.00A	32.92	2.674	2.955	1001.099	0.000	13.728	993.404	2.659	13.544	0.000	0.000	0.000	A WTR
SPOOL 1													
250.00E	31.46	32.92	0.00	695.75	-1.496	7130.9	3.550	3.589	-0.232	1001.100	1001.100	44.300E	
250.00A	32.92	2.704	2.986	1001.099	0.000	13.881	993.404	2.680	13.652	0.000	0.000	0.000	A WTR
SPOOL 1													
260.00E	32.63	32.92	0.00	695.75	-1.479	6909.1	3.459	3.399	-0.176	1001.100	985.064	44.300E	
260.00A	32.92	2.645	2.925	992.137	0.000	13.454	993.404	2.637	13.433	0.000	0.000	0.000	A WTR
SPOOL 1													
270.00E	33.21	33.07	0.00	695.75	-1.530	7161.0	3.505	3.512	-0.085	995.064	1001.100	44.300E	
270.00A	33.07	2.585	2.864	998.436	0.000	13.235	993.356	2.685	13.676	0.000	0.000	0.000	A WTR
SPOOL 1													
280.00E	30.44	33.07	0.00	695.75	-1.489	7117.2	3.457	3.569	-0.137	1001.100	993.480	44.300E	
280.00A	33.07	2.585	2.864	996.841	0.000	13.214	993.356	2.677	13.634	0.000	0.000	0.000	A WTR
SPOOL 1													
290.00E	30.88	33.07	0.00	695.75	-1.493	7186.7	3.507	3.431	0.020	1001.100	985.064	44.300E	
290.00A	33.07	2.615	2.894	992.137	0.000	13.303	993.356	2.690	13.700	0.000	0.000	0.000	A WTR
SPOOL 1													
300.00E	32.92	33.07	0.00	695.75	-1.486	7058.4	3.533	3.518	-0.222	1001.100	1001.100	44.300E	
300.00A	33.07	2.555	2.833	1001.099	0.000	13.118	993.356	2.666	13.577	0.000	0.000	0.000	A WTR
SPOOL 1													
310.00E	32.04	33.07	0.00	695.75	-1.496	7155.2	3.492	3.391	0.044	1001.100	1001.100	44.300E	
310.00A	33.07	2.734	3.016	1001.099	0.000	14.033	993.356	2.684	13.670	0.000	0.000	0.000	A WTR

SPOOL 1

320.00E	32.34	33.07	0.00	695.75	-1.520	7173.3	3.590	3.601	-0.247	1001.100	1001.100	44.300F	
320.00A	33.07	2.555	2.833	1001.099	0.000	13.118	993.356	2.687	13.688	0.000	0.000	0.000	A WTR

SPOOL 1

330.00E	29.13	33.21	0.00	695.75	-1.456	6935.8	3.368	3.445	-0.106	1001.100	1001.100	44.300F	
330.00A	33.21	2.615	2.894	1001.099	0.000	13.423	993.309	2.642	13.459	0.000	0.000	0.000	A WTR

SPOOL 1

340.00E	29.13	33.07	0.00	695.75	-1.496	7285.7	3.556	3.488	-0.035	1001.100	1001.100	44.300F	
340.00A	33.07	2.704	2.986	1001.099	0.000	13.881	993.356	2.699	13.747	0.000	0.000	0.000	A WTR

SPOOL 1

350.00E	31.46	33.36	0.00	695.75	-0.997	4827.5	2.366	2.421	-0.109	1001.100	993.480	44.300F	
350.00A	33.36	2.080	2.344	996.841	0.000	10.631	993.261	2.205	11.228	0.000	0.000	0.000	A WTR

SPOOL 1

360.00E	33.07	33.36	0.00	695.75	-0.633	3123.5	1.447	1.511	0.028	1001.100	1001.100	44.300F	
360.00A	33.36	1.693	1.945	1001.099	0.000	8.693	993.261	1.773	9.032	0.000	0.000	0.000	A WTR

SPOOL 1

370.00E	30.59	33.79	0.00	695.75	-0.377	1907.0	0.889	0.913	0.004	1001.100	1001.100	44.300F	
370.00A	33.79	1.307	1.495	1001.099	0.000	6.709	993.117	1.386	7.057	0.000	0.000	0.000	A WTR

SPOOL 1

380.00E	29.42	33.79	0.00	695.75	-0.243	1188.4	0.553	0.593	-0.042	978.171	969.161	44.300F	
380.00A	33.79	1.069	1.217	973.183	0.000	5.335	993.117	1.094	5.571	0.000	0.000	0.000	A WTR

SPOOL 1

390.00E	33.50	33.79	0.00	695.75	-0.199	1006.0	0.471	0.495	-0.021	1001.100	1001.100	44.300F	
390.00A	33.79	1.010	1.147	1001.099	0.000	5.183	993.117	1.006	5.125	0.000	0.000	0.000	A WTR

SPOOL 1

400.00E	30.88	33.79	0.00	695.75	-0.185	981.7	0.454	0.488	-0.021	1001.100	[illegible].480	44.300F	
400.00A	33.79	0.980	1.113	996.841	0.000	5.009	993.117	0.994	5.063	0.000	0.000	0.000	A WIR

SPOOL 1

410.00E	30.29	33.79	0.00	695.75	0.000	87.3	0.022	0.048	-0.000	1001.100	1001.100	44.300F	
410.00A	33.79	0.178	0.173	1001.099	0.000	0.912	993.117	0.297	1.510	0.000	0.000	0.000	A WIR

SPOOL 1

420.00E	29.42	33.79	0.00	695.75	-0.121	676.1	0.299	0.319	-0.018	986.448	1001.100	44.300F	
420.00A	33.79	0.831	0.939	994.635	0.000	4.240	993.117	0.825	4.202	0.000	0.000	0.000	A WIR

SPOOL 1

430.00E	30.88	33.94	0.00	695.75	-0.118	679.1	0.296	0.315	-0.007	1001.100	1001.100	44.300F	
430.00A	33.94	0.802	0.904	1001.099	0.000	4.115	993.069	0.827	4.211	0.000	0.000	0.000	A WIR

SPOOL 1

440.00E	32.04	34.38	0.00	695.75	-0.121	672.6	0.292	0.323	-0.018	1001.100	985.064	44.300E	
440.00A	34.38	0.772	0.869	992.137	0.000	3.927	992.924	0.823	4.190	0.000	0.000	0.000	A WIR

SPOOL 1

450.00E	33.79	34.38	0.00	695.75	-0.121	694.4	0.292	0.327	0.000	1001.100	[illegible].480	44.300F	
450.00A	34.38	0.831	0.939	996.841	0.000	4.249	992.924	0.836	4.258	0.000	0.000	0.000	A WIR

SPOOL 1

460.00E	34.09	34.38	0.00	695.75	-0.121	686.4	0.299	0.315	0.004	1001.100	1001.100	44.300F	
460.00A	34.38	0.831	0.939	1001.099	0.000	4.268	992.924	0.831	4.233	0.000	0.000	0.000	A WIR

SPOOL 1

470.00E	34.38	34.38	0.00	695.75	-0.121	672.4	0.296	0.336	-0.030	1001.100	[illegible].480	44.300F	
470.00A	34.38	0.831	0.939	996.841	0.000	4.249	992.924	0.823	4.190	0.000	0.000	0.000	A WIR

SPOOL 1

480.00E	33.79	34.38	0.00	695.75	0.000	80.7	0.017	0.048	-0.000	995.064	1001.100	44.300F	

```
  480.00A  34.38    0.178    0.173   998.436 0.000    0.910   992.924    0.285    1.451      0.000      0.000      0.000 A WTR

SPOOL  1
  490.00E  32.92   34.38    0.00    695.75   0.000     88.2    0.017    0.048    0.002 1001.100 1001.100   44.300E

  490.00A  34.38    0.207    0.208  1001.099 0.000    1.065   992.924    0.290    1.474      0.000      0.000      0.000 A WTR

SPOOL  1
  500.00E  34.09   34.09    0.00    695.75   0.003     78.0    0.017    0.044   -0.000  986.448  985.064   44.300E

  500.00A  34.09    0.178    0.173   985.674 0.000    0.898   993.021    0.277    1.408      0.000      0.000      0.000 A WTR

SPOOL  1
  510.00E  30.59   34.38    0.00    695.75   0.000     78.8    0.015    0.044    0.004 1001.100 1001.100   44.300E

  510.00A  34.38    0.296    0.312  1001.099 0.000    1.522   992.924    0.282    1.434      0.000      0.000      0.000 A WTR

SPOOL  1
  520.00E  32.63   34.38    0.00    695.75   0.000     78.0    0.017    0.044   -0.000 1001.100 1001.100   44.300E

  520.00A  34.38    0.296    0.312  1001.099 0.000    1.522   992.924    0.277    1.408      0.000      0.000      0.000 A WTR

SPOOL  1
  530.00E  31.61   34.09    0.00    695.75   0.014      2.0   -0.018    0.018    0.002  986.448 1001.100   44.300E

  530.00A  34.09   -0.000   -0.036   994.635 0.000   -0.002   993.021    0.045    0.227      0.000      0.000      0.000 A WTR

SPOOL  1
  540.00E  30.73   34.09    0.00    695.75   0.000     -1.1   -0.021    0.020   -0.000 1001.100  993.480   44.300E

  540.00A  34.09    0.059    0.034   996.841 0.000    0.301   993.021   -0.034   -0.172      0.000      0.000      0.000 A WTR

SPOOL  1
  550.00E  29.71   34.09    0.00    382.97   0.000     -0.3   -0.018    0.018   -0.000  995.064 1001.100   44.300E

  550.00A  34.09    0.059    0.034   998.436 0.000    0.302   993.021   -0.017   -0.085      0.000      0.000      0.000 A WTR

SPOOL  1
  560.00E  29.13   33.65    0.00    381.60   0.000      0.3   -0.021    0.020    0.002  995.064  993.480   44.300E
```

560.00A	33.65	0.059	0.034	994.178	0.000	0.301	993.165	0.016	0.084	0.000	0.000	0.000	A WTR

SPOOL 1

570.00E	29.42	33.79	0.00	376.13	-0.007	-2.3	-0.021	0.018	-0.000	995.064	1001.100	44.300E	
570.00A	33.79	0.059	0.034	998.436	0.000	0.302	993.117	-0.048	-0.246	0.000	0.000	0.000	A WTR

SPOOL 1

580.00E	38.02	38.02	0.00	83.87	0.867	1604.8	0.464	0.509	0.537	494.669	493.437	44.300E	
580.00A	38.02	7.639	7.889	493.980	0.000	19.348	991.675	1.272	6.469	0.000	0.000	0.000	A WTR

ENGINEERING UNITS CONVERSION RESULTS

DATE 28-JUN-79 RUN NO. 7

TIME (SEC)	TW	TF (DEG. CELSIUS)	TS	PA (KPA)	PD (KPA)	DTT (KG/M*SEC**2)	DF1	DF2 (KG-M/SEC**2)	DF3	GD1	GD2	GD3 (KG/M3)	FLAGS
SPOOL 1													
0.00E	29.13	33.36	0.00	695.75	0.027	-122.9	-0.074	-0.009	-0.014	1001.100	985.064	44.300F	

ANALYSIS OF DATA

TIME (SEC)	FLUID TEMP (CEL)	--TURB VELOCITY-- FTW (M/SEC)	FTA (M/SEC)	RHOF (KG/M**3)	VOID	MAFT (KG/SEC)	----WATER---- DENS (KG/M**3)	VEL (M/SEC)	MAFW (KG/SEC)	----STEAM---- DENS (KG/M**3)	VEL (M/SEC)	MAFW (KG/SEC)	
0.00A	33.36	-0.238	-0.314	992.137	0.000	-1.210	993.261	-0.352	-1.791	0.000	0.000	0.000	A WTR
SPOOL 1													
10.00E	29.71	33.79	0.00	695.75	0.027	-131.5	-0.074	-0.011	-0.018	1001.100	993.480	44.300F	
10.00A	33.79	-0.238	-0.314	996.841	0.000	-1.216	993.117	-0.364	-1.853	0.000	0.000	0.000	A WTR
SPOOL 1													
20.00E	29.86	33.94	0.00	695.75	0.027	-117.7	-0.074	-0.013	-0.007	1001.100	985.064	44.300F	
20.00A	33.94	-0.238	-0.314	992.137	0.000	-1.210	993.069	-0.344	-1.753	0.000	0.000	0.000	A WTR
SPOOL 1													
30.00E	30.15	34.09	0.00	695.75	0.027	-134.5	-0.074	-0.013	-0.018	1001.100	993.480	44.300F	
30.00A	34.09	-0.238	-0.314	996.841	0.000	-1.216	993.021	-0.368	-1.874	0.000	0.000	0.000	A WTR
SPOOL 1													
40.00E	30.29	34.23	0.00	695.75	0.027	-128.9	-0.074	-0.013	-0.014	1001.100	969.161	44.300F	
40.00A	34.23	-0.268	-0.349	983.250	0.000	-1.349	992.973	-0.360	-1.835	0.000	0.000	0.000	A WTR
SPOOL 1													
50.00E	30.59	34.38	0.00	695.75	0.027	-139.3	-0.080	-0.013	-0.014	1001.100	1001.100	44.300F	
50.00A	34.38	-0.238	-0.314	1001.099	0.000	-1.221	992.924	-0.375	-1.907	0.000	0.000	0.000	A WTR

SPOOL 1
60.00E 30.73 34.38 0.00 695.75 0.027 -144.5 -0.083 -0.013 -0.014 1001.100 985.064 44.300F

60.00A 34.38 -0.268 -0.349 992.137 0.000 -1.361 992.924 -0.382 -1.943 0.000 0.000 0.000 A WTR

SPOOL 1
70.00E 31.75 34.96 0.00 695.75 0.209 -938.1 -0.456 -0.395 0.008 1001.100 985.064 44.300F

70.00A 34.96 -0.980 -1.184 992.137 0.000 -4.985 992.729 -0.972 -4.948 0.000 0.000 0.000 A WTR

SPOOL 1
80.00E 32.19 34.96 0.00 695.75 0.108 -510.7 -0.264 -0.180 -0.007 1001.100 993.480 44.300F

80.00A 34.96 -0.683 -0.836 996.841 0.000 -3.492 992.729 -0.717 -3.651 0.000 0.000 0.000 A WTR

SPOOL 1
90.00E 32.04 34.96 0.00 695.75 0.149 -648.3 -0.335 -0.258 0.012 1001.100 969.161 44.300F

90.00A 34.96 -0.831 -1.010 983.250 0.000 -4.192 992.729 -0.805 -4.098 0.000 0.000 0.000 A WTR

SPOOL 1
100.00E 32.34 34.52 0.00 695.75 0.155 -695.3 -0.351 -0.282 -0.000 1001.100 985.064 44.300F

100.00A 34.52 -0.831 -1.010 992.137 0.000 -4.230 992.876 -0.837 -4.260 0.000 0.000 0.000 A WTR

SPOOL 1
110.00E 32.34 34.67 0.00 695.75 0.149 -678.2 -0.333 -0.270 -0.007 1001.100 969.161 44.300F

110.00A 34.67 -0.831 -1.010 983.250 0.000 -4.192 992.827 -0.823 -4.192 0.000 0.000 0.000 A WTR

SPOOL 1
120.00E 32.63 34.96 0.00 695.75 0.149 -678.7 -0.343 -0.266 -0.007 1001.100 969.161 44.300F

120.00A 34.96 -0.831 -1.010 983.250 0.000 -4.192 992.729 -0.827 -4.209 0.000 0.000 0.000 A WTR

SPOOL 1
130.00E 32.63 34.96 0.00 695.75 0.149 -680.1 -0.347 -0.274 0.004 1001.100 1001.100 44.300F

130.00A 34.96 -0.861 -1.045 1001.099 0.000 -4.420 992.729 -0.828 -4.213 0.000 0.000 0.000 A WTR

SPOOL 1
140.00E 32.63 34.52 0.00 695.75 0.149 -678.3 -0.337 -0.272 -0.007 1001.100 969.161 44.300F

140.00A	34.52	-0.861	-1.045	983.250	0.000	-4.342	992.876	-0.827	-4.208	0.000	0.000	0.000	A WTR
SPOOL 1													
150.00E	32.63	34.96	0.00	695.75	0.155	-674.5	-0.346	-0.272	0.006	1001.100	985.064	44.300E	
150.00A	34.96	-0.831	-1.010	992.137	0.000	-4.230	992.729	-0.824	-4.196	0.000	0.000	0.000	A WTR
SPOOL 1													
160.00E	32.77	34.96	0.00	695.75	0.149	-679.5	-0.341	-0.272	-0.004	1001.100	1001.100	44.300F	
160.00A	34.96	-0.831	-1.010	1001.099	0.000	-4.268	992.729	-0.827	-4.211	0.000	0.000	0.000	A WTR
SPOOL 1													
170.00E	32.92	35.11	0.00	695.75	0.145	-680.1	-0.347	-0.274	0.004	1001.100	969.161	44.300F	
170.00A	35.11	-0.861	-1.045	983.250	0.000	-4.342	992.680	-0.828	-4.213	0.000	0.000	0.000	A WTR
SPOOL 1													
180.00E	32.92	35.11	0.00	695.75	0.149	-679.5	-0.340	-0.270	-0.007	1001.100	1001.100	44.300F	
180.00A	35.11	-0.831	-1.010	1001.099	0.000	-4.268	992.680	-0.827	-4.211	0.000	0.000	0.000	A WTR
SPOOL 1													
190.00F	32.92	35.11	0.00	695.75	0.230	-1037.2	-0.491	-0.430	0.007	1001.100	985.064	44.300F	
190.00A	35.11	-1.039	-1.253	992.137	0.000	-5.286	992.680	-1.022	-5.203	0.000	0.000	0.000	A WTR
SPOOL 1													
200.00E	33.21	35.25	0.00	695.75	0.533	-2346.4	-1.080	-1.031	0.044	1001.100	969.161	44.300F	
200.00A	35.25	-1.603	-1.914	983.250	0.000	-8.081	992.631	-1.537	-7.826	0.000	0.000	0.000	A WTR
SPOOL 1													
210.00E	33.07	34.96	0.00	695.75	0.932	-4396.8	-1.983	-1.968	0.038	1001.100	969.161	44.300F	
210.00A	34.96	-2.196	-2.489	983.250	0.000	-11.073	992.729	-2.105	-10.713	0.000	0.000	0.000	A WTR
SPOOL 1													
220.00E	33.21	34.67	0.00	695.75	1.448	-6802.2	-3.132	3.112	0.092	1001.100	985.064	44.300F	

220.00A	34.67	-2.730	-3.018	992.137	0.000	-13.891	992.827	-2.618	-13.325	0.000	0.000	0.000	A	WTR
SPOOL 1														
230.00E	33.07	34.67	0.00	695.75	1.431	-6798.9	-3.090	-3.121	0.068	1001.100	1001.100	44.300E		
230.00A	34.67	-2.701	-2.988	1001.099	0.000	-13.864	992.827	-2.616	-13.317	0.000	0.000	0.000	A	WTR
SPOOL 1														
240.00E	33.21	34.96	0.00	695.75	1.474	-6814.9	-3.114	-3.121	0.072	1001.100	993.480	44.300E		
240.00A	34.96	-2.730	-3.018	996.841	0.000	-13.956	992.729	-2.620	-13.337	0.000	0.000	0.000	A	WTR
SPOOL 1														
250.00E	33.07	34.96	0.00	695.75	1.438	-6861.5	-3.158	-3.152	0.103	1001.100	985.064	44.300E		
250.00A	34.96	-2.730	-3.018	992.137	0.000	-13.891	992.729	-2.629	-13.383	0.000	0.000	0.000	A	WTR
SPOOL 1														
260.00E	33.21	34.96	0.00	695.75	1.431	-6850.2	-3.098	-3.115	0.012	1001.100	985.064	44.300E		
260.00A	34.96	-2.730	-3.018	992.137	0.000	-13.891	992.729	-2.628	-13.376	0.000	0.000	0.000	A	WTR
SPOOL 1														
270.00E	33.21	34.96	0.00	695.75	1.435	-6887.8	-3.147	-3.127	0.036	1001.100	969.161	44.300E		
270.00A	34.96	-2.730	-3.018	983.250	0.000	-13.766	992.729	-2.634	-13.408	0.000	0.000	0.000	A	WTR
SPOOL 1														
280.00E	33.21	34.96	0.00	695.75	1.445	-6912.7	-3.165	-3.152	0.060	1001.100	969.161	44.300E		
280.00A	34.96	-2.701	-2.988	983.250	0.000	-13.617	992.729	-2.639	-13.432	0.000	0.000	0.000	A	WTR
SPOOL 1														
290.00E	33.21	34.96	0.00	695.75	1.431	-6858.7	-3.151	-3.143	0.088	1001.100	969.161	44.300E		
290.00A	34.96	-2.730	-3.018	983.250	0.000	-13.766	992.729	-2.628	-13.380	0.000	0.000	0.000	A	WTR
SPOOL 1														
300.00E	33.36	35.11	0.00	695.75	1.445	-6828.0	-3.165	-3.075	0.064	1001.100	1001.100	44.300E		
300.00A	35.11	-2.730	-3.018	1001.099	0.000	-14.016	992.680	-2.623	-13.350	0.000	0.000	0.000	A	WTR

SPOOL 1

310.00E	33.50	34.96	0.00	695.75	0.840	-4148.7	-1.850	-1.874	0.038	1001.100	985.064	44.500F	
310.00A	34.96	-2.107	-2.402	992.137	0.000	-10.721	992.729	-2.044	-10.406	0.000	0.000	0.000	A WIR

SPOOL 1

320.00E	33.36	35.11	0.00	695.75	0.432	-2081.5	-0.911	-0.906	-0.018	1001.100	985.064	44.500F	
320.00A	35.11	-1.484	-1.775	992.137	0.000	-7.551	992.680	-1.448	-7.371	0.000	0.000	0.000	A WIR

SPOOL 1

330.00E	33.36	35.25	0.00	695.75	0.257	-1152.2	-0.539	-0.489	-0.000	1001.100	1001.100	44.500E	
330.00A	35.25	-1.098	-1.323	1001.099	0.000	-5.639	992.631	-1.077	-5.484	0.000	0.000	0.000	A WIR

SPOOL 1

340.00E	33.79	35.25	0.00	695.75	0.216	-1001.3	-0.476	-0.415	-0.007	1001.100	985.064	44.500F	
340.00A	35.25	-1.00[illegible]	-1.219	992.137	0.000	-5.136	992.631	-1.004	-5.112	0.000	0.000	0.000	A WIR

SPOOL 1

350.00E	33.36	35.55	0.00	695.75	0.155	-810.4	-0.392	-0.336	-0.004	1001.100	1001.100	44.500F	
350.00A	35.55	-0.920	-1.114	1001.099	0.000	-4.725	992.533	-0.904	-4.599	0.000	0.000	0.000	A WIR

SPOOL 1

360.00E	33.65	35.55	0.00	695.75	0.138	-644.8	-0.330	-0.256	0.004	1001.100	985.064	44.500F	
360.00A	35.55	-0.802	-0.975	992.137	0.000	-4.079	992.533	-0.806	-4.102	0.000	0.000	0.000	A WIR

SPOOL 1

370.00E	33.79	35.55	0.00	695.75	0.149	-689.4	-0.347	-0.272	-0.007	1001.100	993.480	44.500F	
370.00A	35.55	-0.831	-1.010	996.841	0.000	-4.250	992.533	-0.833	-4.241	0.000	0.000	0.000	A WIR

SPOOL 1

380.00E	33.79	35.69	0.00	695.75	0.149	-686.6	-0.348	-0.274	-0.007	1001.100	985.161	44.500F	
380.00A	35.69	-0.831	-1.010	983.250	0.000	-4.192	992.483	-0.832	-4.233	0.000	0.000	0.000	A WIR

```
SPOOL  1
  390.00E  33.94   35.84    0.00   695.75   0.149   -692.9   -0.349   -0.274   -0.007 1001.100  985.064   44.300F

  390.00A  35.84   -0.831   -1.010  992.137 0.000   -4.230   992.434   -0.836   -4.252    0.000    0.000    0.000 A WIR

SPOOL  1
  400.00E  33.94   35.84    0.00   695.75   0.149   -688.2   -0.344   -0.274   -0.007 1001.100 1001.100   44.300F

  400.00A  35.84   -0.831   -1.010 1001.099 0.000   -4.268   992.434   -0.833   -4.238    0.000    0.000    0.000 A WIR

SPOOL  1
  410.00E  33.79   35.84    0.00   695.75   0.149   -691.8   -0.344   -0.274   -0.011 1001.100  969.161   44.300F

  410.00A  35.84   -0.831   -1.010  983.250 0.000   -4.192   992.434   -0.835   -4.249    0.000    0.000    0.000 A WIR

SPOOL  1
  420.00E  34.09   35.84    0.00   695.75   0.152   -708.6   -0.346   -0.270   -0.028 1001.100  985.064   44.300F

  420.00A  35.84   -0.831   -1.010  992.137 0.000   -4.230   992.434   -0.845   -4.300    0.000    0.000    0.000 A WIR

SPOOL  1
  430.00E  34.09   35.84    0.00   695.75   0.095   -419.6   -0.227   -0.128   -0.007 1001.100  993.480   44.300F

  430.00A  35.84   -0.594   -0.731  996.841 0.000   -3.037   992.434   -0.650   -3.309    0.000    0.000    0.000 A WIR

SPOOL  1
  440.00E  33.94   36.13    0.00   695.75   0.041   -243.6   -0.132   -0.035   -0.021 1001.100  969.161   44.300F

  440.00A  36.13   -0.327   -0.418  983.250 0.000   -1.649   992.334   -0.495   -2.521    0.000    0.000    0.000 A WIR

SPOOL  1
  450.00E  33.79   35.84    0.00   695.75   0.027   -160.2   -0.093   -0.013   -0.014 1001.100  969.161   44.300E

  450.00A  35.84   -0.238   -0.314  983.250 0.000   -1.199   992.434   -0.402   -2.044    0.000    0.000    0.000 A WIR

SPOOL  1
  460.00E  33.79   35.84    0.00   695.75   0.027   -171.8   -0.093   -0.016   -0.018 1001.100  993.480   44.300E

  460.00A  35.84   -0.268   -0.349  996.841 0.000   -1.368   992.434   -0.416   -2.117    0.000    0.000    0.000 A WIR

SPOOL  1
  470.00E  33.94   35.84    0.00   695.75   0.027   -164.4   -0.087   -0.018   -0.018 1001.100  993.480   44.300E
```

470.00A 35.84 -0.238 -0.314 996.841 0.000 -1.216 992.434 -0.407 -2.071 0.000 0.000 0.000 A WIR

SPOOL 1
480.00E 33.94 36.13 0.00 695.75 0.027 -174.8 -0.093 -0.018 -0.018 1001.100 969.161 44.300F

480.00A 36.13 -0.238 -0.314 983.250 0.000 -1.199 992.334 -0.420 -2.136 0.000 0.000 0.000 A WIR

SPOOL 1
490.00E 33.94 36.13 0.00 695.75 0.027 -169.2 -0.093 -0.018 -0.014 1001.100 969.161 44.300F

490.00A 36.13 -0.238 -0.314 983.250 0.000 -1.199 992.334 -0.413 -2.101 0.000 0.000 0.000 A WIR

SPOOL 1
500.00E 33.94 36.13 0.00 695.75 0.027 -166.6 -0.090 -0.016 -0.018 1001.100 1001.100 44.300F

500.00A 36.13 -0.238 -0.314 1001.099 0.000 -1.221 992.334 -0.410 -2.085 0.000 0.000 0.000 A WIR

SPOOL 1
510.00E 33.79 35.84 0.00 695.75 0.000 -87.6 -0.041 0.012 -0.014 1001.100 993.480 44.300F

510.00A 35.84 0.029 -0.001 996.841 0.000 0.150 992.434 -0.195 -0.991 0.000 0.000 0.000 A WIR

ENGINEERING UNITS CONVERSION RESULTS

DATE 02-JUL-79 RUN NO. 9

TIME (SEC)	TW	TF	TS	PA	PD	DTT	DF1	DF2	DF3	GR1	GR2	GR3	FLAGS
	(DEG. CELSIUS)			(KPA)	(KPA)	(KG/M*SEC**2)		(KG-M/SEC**2)				(KG/M3)	
SPOOL 4													
10.00E	24.45	26.79	25.63	694.43	0.024	-54.8	-0.067	-0.041	-0.028	954.592	1001.100	44.300F	

ANALYSIS OF DATA

TIME (SEC)	FLUID TEMP (CEL)	TURB VELOCITY FTW (M/SEC)	TURB VELOCITY FTA (M/SEC)	RHOF (KG/M**3)	VOID	MAFT (KG/SEC)	WATER DENS (KG/M**3)	WATER VEL. (M/SEC)	WATER MAFW (KG/SEC)	STEAM DENS (KG/M**3)	STEAM VEL. (M/SEC)	STEAM MAFW (KG/SEC)	
10.00A	26.79	-0.136	-0.120	980.582	0.000	-0.686	995.288	-0.235	-1.198	0.000	0.000	0.000	A WTR
SPOOL 4													
20.00E	24.45	27.52	25.92	694.43	0.024	-56.9	-0.064	-0.043	-0.032	957.184	1001.100	44.300F	
20.00A	27.52	-0.136	-0.120	981.725	0.000	-0.687	995.074	-0.239	-1.220	0.000	0.000	0.000	A WTR
SPOOL 4													
30.00E	24.75	27.09	25.92	694.43	0.042	-56.9	-0.064	-0.043	-0.032	973.413	1001.100	44.300E	
30.00A	27.09	-0.198	-0.190	988.885	0.000	-1.002	995.203	-0.239	-1.220	0.000	0.000	0.000	A WTR
SPOOL 4													
40.00E	25.04	27.67	26.21	694.43	0.051	-56.9	-0.064	-0.043	-0.032	957.184	1001.100	44.300F	
40.00A	27.67	-0.136	-0.120	981.725	0.000	-0.687	995.031	-0.239	-1.220	0.000	0.000	0.000	A WTR
SPOOL 4													
50.00E	25.19	27.67	26.21	694.43	0.042	-64.4	-0.067	-0.045	-0.033	979.101	1001.100	44.300E	
50.00A	27.67	-0.136	-0.120	991.394	0.000	-0.694	995.031	-0.254	-1.298	0.000	0.000	0.000	A WTR
SPOOL 4													
60.00F	25.63	27.96	26.21	694.43	0.042	-54.9	-0.064	-0.045	-0.028	957.184	1001.100	44.300E	
60.00A	27.96	-0.136	-0.120	981.725	0.000	-0.687	994.945	-0.235	-1.198	0.000	0.000	0.000	A WTR

SPOOL 4

70.00E	25.63	27.96	26.79	694.43	-0.056	-672.1	-0.812	-0.303	-0.038	985.148	1001.100	44.300F	
70.00A	27.96	-0.736	-0.826	985.238	0.000	-3.718	994.945	-0.810	-4.130	0.000	0.000	0.000	A WTR

SPOOL 4

80.00E	25.63	27.96	26.50	694.43	-0.056	-675.5	-0.827	-0.303	-0.039	967.868	1001.100	44.300F	
80.00A	27.96	-0.736	-0.826	986.439	0.000	-3.722	994.945	-0.824	-4.204	0.000	0.000	0.000	A WTR

SPOOL 4

90.00E	25.77	27.96	27.09	694.43	-0.063	-671.1	-0.816	-0.314	-0.035	979.101	1001.100	44.300F	
90.00A	27.96	-0.736	-0.826	991.394	0.000	-3.741	994.945	-0.821	-4.190	0.000	0.000	0.000	A WTR

SPOOL 4

100.00E	26.06	27.96	26.79	694.43	-0.049	-684.2	-0.828	-0.310	-0.043	954.592	1001.100	44.300F	
100.00A	27.96	-0.765	-0.861	980.582	0.000	-3.849	994.945	-0.829	-4.231	0.000	0.000	0.000	A WTR

SPOOL 4

110.00E	25.92	27.96	26.36	694.43	-0.059	-668.3	-0.812	-0.303	-0.043	979.101	1001.100	44.300F	
110.00A	27.96	-0.765	-0.861	991.394	0.000	-3.891	994.945	-0.816	-4.165	0.000	0.000	0.000	A WTR

SPOOL 4

120.00E	25.92	27.96	26.79	694.43	-0.059	-675.5	-0.827	-0.303	-0.039	976.238	1001.100	44.300F	
120.00A	27.96	-0.824	-0.932	990.131	0.000	-4.186	994.945	-0.824	-4.204	0.000	0.000	0.000	A WTR

SPOOL 4

130.00E	26.06	27.96	26.79	694.43	-0.056	-680.0	-0.828	-0.307	-0.043	957.184	1001.100	44.300F	
130.00A	27.96	-0.736	-0.826	981.725	0.000	-3.704	994.945	-0.827	-4.218	0.000	0.000	0.000	A WTR

SPOOL 4

140.00E	26.06	28.11	26.21	694.43	-0.059	-677.9	-0.825	-0.303	-0.043	976.238	1001.100	44.300F	
140.00A	28.11	-0.765	-0.861	990.131	0.000	-3.886	994.902	-0.825	-4.211	0.000	0.000	0.000	A WTR

SPOOL 4

150.00E	[illegible]	[illegible]	[illegible]	[illegible]	[illegible]	[illegible]	[illegible]	[illegible]	[illegible]	[illegible]	[illegible]	[illegible]	

150.00A	28.25	-0.736	-0.826	981.725	0.000	-3.704	994.858	-0.824	-4.204	0.000	0.000	0.000	A WTR
SPOOL 4													
160.00E	26.21	28.11	26.79	694.43	-0.139	-1110.5	-0.507	-0.502	-0.039	970.628	1001.100	44.300E	
160.00A	28.11	-1.002	-1.144	987.654	0.000	-5.073	994.902	-1.056	-5.390	0.000	0.000	0.000	A WTR
SPOOL 4													
170.00E	26.36	27.96	26.79	694.43	-0.403	-2783.8	-1.203	-1.198	-0.106	962.461	1001.100	44.300E	
170.00A	27.96	-1.533	-1.779	984.053	0.000	-7.736	994.945	-1.673	-8.534	0.000	0.000	0.000	A WTR
SPOOL 4													
180.00E	26.21	27.96	26.79	694.43	-0.765	-5444.4	-2.208	-2.494	-0.134	987.921	1001.100	44.300E	
180.00A	27.96	-2.153	-2.396	995.285	0.000	-10.988	994.945	-2.339	-11.934	0.000	0.000	0.000	A WTR
SPOOL 4													
190.00E	26.79	27.96	26.79	694.43	-1.085	-7747.3	-3.191	-3.695	-0.120	990.941	1001.100	44.300E	
190.00A	27.96	-2.507	-2.779	996.617	0.000	-12.814	994.945	-2.790	-14.236	0.000	0.000	0.000	A WTR
SPOOL 4													
200.00E	26.79	28.11	26.79	694.43	-1.116	-7830.7	-3.228	-3.695	-0.163	979.101	1001.100	44.300E	
200.00A	28.11	-2.507	-2.779	991.394	0.000	-12.746	994.902	-2.806	-14.312	0.000	0.000	0.000	A WTR
SPOOL 4													
210.00E	26.79	28.11	26.79	694.43	-1.116	-7910.0	-3.329	-3.695	-0.138	957.184	1001.100	44.300E	
210.00A	28.11	-2.626	-2.908	981.725	0.000	-13.217	994.902	-2.820	-14.384	0.000	0.000	0.000	A WTR
SPOOL 4													
220.00E	26.65	28.11	26.79	694.43	-1.113	-7885.9	-3.300	-3.695	-0.144	997.111	1001.100	44.300E	
220.00A	28.11	-2.626	-2.908	999.339	0.000	-13.454	994.902	-2.815	-14.362	0.000	0.000	0.000	A WTR
SPOOL 4													
230.00E	26.79	28.25	26.79	694.43	-1.085	-7760.2	-3.186	-3.695	-0.138	979.101	1001.100	44.300E	

230.00A	28.25	-2.566	-2.843	991.394	0.000	-13.047	994.858	-2.793	-14.247	0.000	0.000	0.000	A WIR
SPOOL 4													
240.00E	26.79	28.25	27.09	694.43	-1.099	-7866.9	-3.282	-3.695	-0.144	984.941	1001.100	44.300F	
240.00A	28.25	-2.566	-2.843	993.970	0.000	-13.080	994.858	-2.812	-14.345	0.000	0.000	0.000	A WIR
SPOOL 4													
250.00E	26.79	28.25	26.94	694.43	-1.095	-7816.6	-3.224	-3.695	-0.153	990.941	1001.100	44.300F	
250.00A	28.25	-2.626	-2.908	996.617	0.000	-13.417	994.858	-2.803	-14.299	0.000	0.000	0.000	A WIR
SPOOL 4													
260.00E	26.94	28.54	27.09	694.43	-1.113	-7893.8	-3.260	-3.695	-0.191	1000.262	1001.100	44.300F	
260.00A	28.54	-2.626	-2.908	1000.729	0.000	-13.472	994.771	-2.817	-14.369	0.000	0.000	0.000	A WIR
SPOOL 4													
270.00E	26.36	28.40	27.38	694.43	-1.092	-7864.9	-3.260	-3.695	-0.163	990.941	1001.100	44.300F	
270.00A	28.40	-2.596	-2.875	996.617	0.000	-13.266	994.814	-2.812	-14.343	0.000	0.000	0.000	A WIR
SPOOL 4													
280.00E	26.94	28.54	27.09	694.43	-0.675	-4898.9	-2.082	-2.179	-0.090	973.413	1001.100	44.300F	
280.00A	28.54	-2.035	-2.284	988.885	0.000	-10.319	994.77[illegible]	-2.219	-11.319	0.000	0.000	0.000	A WIR
SPOOL 4													
290.00E	26.94	28.54	27.09	694.43	-0.396	-3007.0	-1.287	-1.309	-0.106	990.941	1001.100	44.300F	
290.00A	28.54	-1.622	-1.885	996.617	0.000	-8.287	994.771	-1.739	-8.868	0.000	0.000	0.000	A WIR
SPOOL 4													
300.00E	27.38	28.69	26.94	694.43	-0.188	-1635.2	-0.725	-0.722	-0.059	965.148	1001.100	44.300F	
300.00A	28.69	-1.208	-1.391	985.238	0.000	-6.104	994.727	-1.282	-6.540	0.000	0.000	0.000	A WIR
SPOOL 4													
310.00E	26.79	29.13	27.38	694.43	-0.118	-1047.6	-0.481	-0.469	-0.043	979.101	1001.100	44.300F	
310.00A	29.13	-0.972	-1.168	991.394	0.000	-4.942	994.594	-1.026	-5.234	0.000	0.000	0.000	A WIR

SPOOL 4

320.00E	27.09	29.13	27.52	694.43	-0.104	-973.9	-0.452	-0.436	-0.041	976.238	1001.100	44.300F	
320.00A	29.13	-0.854	-0.967	990.131	0.000	-4.336	994.594	-0.990	-5.047	0.000	0.000	0.000	A WTR

SPOOL 4

330.00E	27.23	28.84	27.52	694.43	-0.097	-968.8	-0.445	-0.421	-0.039	979.101	1001.100	44.300F	
330.00A	28.84	-0.913	-1.038	991.394	0.000	-4.641	994.683	-0.987	-5.034	0.000	0.000	0.000	A WTR

SPOOL 4

340.00E	27.38	29.13	27.52	694.43	-0.122	-1083.3	-0.499	-0.482	-0.043	979.101	1001.100	44.300F	
340.00A	29.13	-0.972	-1.108	991.394	0.000	-4.942	994.594	-1.044	-5.323	0.000	0.000	0.000	A WTR

SPOOL 4

350.00E	27.23	29.13	27.96	694.43	-0.170	-1368.7	-0.614	-0.594	-0.065	967.868	1001.100	44.300F	
350.00A	29.13	-1.090	-1.250	986.439	0.000	-5.514	994.594	-1.173	-5.983	0.000	0.000	0.000	A WTR

SPOOL 4

360.00E	27.38	29.13	27.67	694.43	-0.188	-1453.8	-0.649	-0.650	-0.049	967.868	1001.100	44.300F	
360.00A	29.13	-1.090	-1.250	986.439	0.000	-5.514	994.594	-1.209	-6.166	0.000	0.000	0.000	A WTR

SPOOL 4

370.00E	27.38	29.13	27.67	694.43	-0.205	-1621.6	-0.718	-0.701	-0.075	976.238	1001.100	44.300F	
370.00A	29.13	-1.179	-1.356	990.131	0.000	-5.985	994.594	-1.277	-6.512	0.000	0.000	0.000	A WTR

SPOOL 4

380.00E	27.38	29.13	27.96	694.43	-0.195	-1602.1	-0.712	-0.698	-0.067	965.148	1001.100	44.300F	
380.00A	29.13	-1.179	-1.356	985.238	0.000	-5.955	994.594	-1.269	-6.473	0.000	0.000	0.000	A WTR

SPOOL 4

390.00E	27.38	29.13	27.96	694.43	-0.205	-1689.1	-0.730	-0.723	-0.055	967.868	1001.100	44.300F	
390.00A	29.13	-1.179	-1.356	986.439	0.000	-5.962	994.594	-1.284	-6.547	0.000	0.000	0.000	A WTR

SPOOL 4

400.00E	27.52	29.13	27.52	694.43	-0.188	-1578.1	-0.707	-0.694	-0.055	984.941	1001.100	44.300F	
400.00A	29.13	-1.179	-1.356	993.970	0.000	-6.008	994.594	-1.260	-6.424	0.000	0.000	0.000	A WTR

SPOOL 4

410.00E	27.38	29.13	27.96	694.43	-0.229	-1875.3	-0.823	-0.827	-0.065	979.101	1001.100	44.300F	
410.00A	29.13	-1.267	-1.461	991.394	0.000	-6.443	994.594	-1.373	-7.003	0.000	0.000	0.000	A WTR

SPOOL 4

420.00E	27.38	29.13	27.81	694.43	-0.236	-1868.4	-0.834	-0.816	-0.059	967.868	1001.100	44.300F	
420.00A	29.13	-1.267	-1.461	986.439	0.000	-6.410	994.594	-1.371	-6.990	0.000	0.000	0.000	A WTR

SPOOL 4

430.00E	27.67	29.27	27.96	694.43	-0.240	-1875.2	-0.829	-0.821	-0.065	965.148	1001.100	44.300F	
430.00A	29.27	-1.267	-1.461	985.238	0.000	-6.403	994.550	-1.373	-7.003	0.000	0.000	0.000	A WTR

SPOOL 4

440.00E	27.67	29.13	27.96	694.43	-0.236	-1879.5	-0.823	-0.830	-0.065	979.101	1001.100	44.300F	
440.00A	29.13	-1.297	-1.497	991.394	0.000	-6.593	994.594	-1.375	-7.011	0.000	0.000	0.000	A WTR

SPOOL 4

450.00E	27.96	29.71	27.81	694.43	-0.236	-1857.8	-0.830	-0.825	-0.055	965.148	1001.100	44.300F	
450.00A	29.71	-1.267	-1.461	985.238	0.000	-6.403	994.416	-1.367	-6.969	0.000	0.000	0.000	A WTR

SPOOL 4

460.00E	27.81	29.42	28.11	694.43	-0.229	-1867.9	-0.830	-0.827	-0.051	976.238	1001.100	44.300F	
460.00A	29.42	-1.267	-1.461	990.131	0.000	-6.434	994.506	-1.370	-6.989	0.000	0.000	0.000	A WTR

SPOOL 4

470.00E	27.96	29.42	28.25	694.43	-0.236	[illegible]	-0.830	-0.834	-0.063	970.623	1001.100	44.300F	
470.00A	29.42	-1.267	1.461	987.654	0.000	-6.418	994.506	-1.379	-7.030	0.000	0.000	0.000	A WTR

SPOOL 4

[illegible]	[illegible]	[illegible]	[illegible]	[illegible]	[illegible]	[illegible]	[illegible]	[illegible]	[illegible]	[illegible]	[illegible]	[illegible]	

480.00A	29.57	-0.618	-0.685	986.439	0.000	-3.125	994.461	-0.770	-3.925	0.000	0.000	0.000	A WTR

SPOOL 4

490.00E	27.81	29.42	27.96	182.02	-0.056	-59.2	-0.060	-0.043	-0.037	997.111	1001.100	44.300E	
490.00A	29.42	-0.014	0.022	999.339	0.000	-0.073	994.506	-0.244	-1.244	0.000	0.000	0.000	A WTR

SPOOL 4

500.00E	27.38	29.71	27.96	93.15	-0.042	-55.3	-0.065	-0.035	-0.035	994.004	1001.100	44.300E	
500.00A	29.71	0.047	0.092	997.969	0.000	0.240	994.416	-0.236	-1.202	0.000	0.000	0.000	A WTR

ENGINEERING UNITS CONVERSION RESULTS

DATE 02-JUL-79 RUN NO. 10

TIME (SEC)	TW	TF	TS	PA (KPA)	PD (KPA)	DTT (KG/M*SEC**2)	DF1	DF2 (KG-M/SEC**2)	DFS	GD1	GD2	GD3 (KG/MS)	FLAGS
	(DEG. CELSIUS)												
SPOOL 4													
10.00E	26.94	30.29	28.54	694.43	0.045	-67.7	-0.075	-0.047	-0.028	957.184	1001.100	44.300E	

ANALYSIS OF DATA

TIME (SEC)	FLUID TEMP (CEL)	--TURB VELOCITY-- FTW (M/SEC)	FTA (M/SEC)	RHOF (KG/M**3)	VOID	MAFT (KG/SEC)	WATER DENS (KG/M**3)	WATER VFI (M/SEC)	WATER MAFW (KG/SEC)	STEAM DENS (KG/M**3)	STEAM VFI (M/SEC)	STEAM MAFW (KG/SEC)	
10.00A	30.29	-0.198	-0.190	981.725	0.000	-0.995	994.236	-0.261	-1.330	0.000	0.000	0.000	A WTR
SPOOL 4													
20.00E	27.09	30.29	28.69	694.43	0.045	-60.6	-0.064	-0.047	-0.032	965.148	1001.100	44.300E	
20.00A	30.29	-0.136	-0.120	985.238	0.000	-0.689	994.236	-0.247	-1.239	0.000	0.000	0.000	A WTR
SPOOL 4													
30.00E	27.38	30.15	29.13	694.43	0.042	-58.8	-0.064	-0.045	-0.032	972.413	1001.100	44.300E	
30.00A	30.15	-0.136	-0.120	988.885	0.000	-0.692	994.282	0.243	-1.240	0.000	0.000	0.000	A WTR
SPOOL 4													
40.00E	27.38	30.29	28.54	694.43	0.035	-62.9	-0.067	-0.047	-0.039	957.184	1001.100	44.300E	
40.00A	30.29	-0.198	-0.190	981.725	0.000	-0.995	994.236	-0.251	-1.282	0.000	0.000	0.000	A WTR
SPOOL 4													
50.00E	27.38	30.29	28.54	694.43	0.042	-60.3	-0.069	-0.045	-0.028	970.628	1001.100	44.300E	
50.00A	30.29	-0.136	-0.120	987.654	0.000	-0.691	994.286	-0.246	-1.256	0.000	0.000	0.000	A WTR
SPOOL 4													
60.00E	27.52	30.29	28.25	694.43	0.056	-62.2	-0.069	-0.047	-0.028	979.101	1001.100	44.300E	
60.00A	30.29	-0.136	-0.120	991.394	0.000	-0.694	994.236	-0.250	-1.275	0.000	0.000	0.000	A WTR

```
SPOOL   4
  70.00E  27.96   30.44   29.13   694.43   -0.052   -615.1   -0.290   -0.283   -0.043  957.184 1001.100   44.300E

  70.00A  30.44   -0.618   -0.685   981.725 0.000   -3.110   994.191   -0.787   -4.010     0.000     0.000     0.000 A WTR

SPOOL   4
  80.00E  27.96   30.29   28.98   694.43   -0.052   -687.8   -0.334   -0.310   -0.035  970.623 1001.100   44.300E

  80.00A  30.29   -0.736   -0.826   987.654 0.000   -3.727   994.236   -0.832   -4.240     0.000     0.000     0.000 A WTR

SPOOL   4
  90.00E  28.11   30.29   29.13   694.43   -0.056   -694.5   -0.327   -0.318   -0.041  979.101 1001.100   44.300E

  90.00A  30.29   -0.765   -0.861   991.394 0.000   -3.891   994.236   -0.836   -4.261     0.000     0.000     0.000 A WTR

SPOOL   4
 100.00E  27.96   30.29   29.13   694.43   -0.056   -690.5   -0.322   -0.318   -0.043  952.031 1001.100   44.300E

 100.00A  30.29   -0.765   -0.861   979.452 0.000   -3.844   994.236   -0.833   -4.248     0.000     0.000     0.000 A WTR

SPOOL   4
 110.00E  28.25   30.29   29.13   694.43   -0.059   -705.5   -0.331   -0.318   -0.047  982.002 1001.100   44.300E

 110.00A  30.29   -0.765   -0.861   992.674 0.000   -3.896   994.236   -0.842   -4.294     0.000     0.000     0.000 A WTR

SPOOL   4
 120.00E  28.25   30.44   29.13   694.43   -0.056   -696.8   -0.329   -0.316   -0.043  987.921 1001.100   44.300E

 120.00A  30.44   -0.765   -0.861   995.285 0.000   -3.906   994.191   -0.837   -4.268     0.000     0.000     0.000 A WTR

SPOOL   4
 130.00E  28.25   30.29   29.13   694.43   -0.063   -696.8   -0.327   -0.318   -0.043  997.111 1001.100   44.300E

 130.00A  30.29   -0.736   -0.826   999.339 0.000   -3.771   994.236   -0.837   -4.268     0.000     0.000     0.000 A WTR

SPOOL   4
 140.00E  28.54   30.59   29.13   694.43   -0.059   -694.5   -0.327   -0.318   -0.041  990.941 1001.100   44.300E

 140.00A  30.59   -0.765   -0.861   996.617 0.000   -3.911   994.146   -0.836   -4.261     0.000     0.000     0.000 A WTR

SPOOL   4
 150.00E  28.54   30.44   29.13   694.43   -0.063   -698.2   -0.322   -0.318   -0.041  [illegible] 1001.100   44.300E
```

```
  150.00A  30.44   -0.765   -0.861   990.131 0.000   -3.886    994.191   -0.832   -4.241      0.000      0.000     0.000 A WTR

SPOOL  4
  160.00E  28.54   30.59    29.71    694.43  -0.087   -940.9   -0.430   -0.419   -0.051  984.941 1001.100   44.300F

  160.00A  30.59   -0.913   -1.038   993.970 0.000   -4.653    994.146   -0.973   -4.979      0.000      0.000     0.000 A WTR

SPOOL  4
  170.00E  28.54   30.59    29.13    694.43  -0.111  -1014.9   -0.459   -0.451   -0.055  967.868 1001.100   44.300F

  170.00A  30.59   -0.854   -0.967   986.439 0.000   -4.320    994.146   -1.010   -5.131      0.000      0.000     0.000 A WTR

SPOOL  4
  180.00E  28.69   30.73    29.27    694.43  -0.163  -1338.9   -0.598   -0.591   -0.059  990.941 1001.100   44.300E

  180.00A  30.73   -1.090   -1.250   996.617 0.000   -5.571    994.100   -1.161   -5.916      0.000      0.000     0.000 A WTR

SPOOL  4
  190.00E  28.54   30.59    29.42    694.43  -0.167  -1393.6   -0.616   -0.620   -0.059  979.101 1001.100   44.300F

  190.00A  30.59   -1.090   -1.250   991.394 0.000   -5.542    994.146   -1.184   -6.035      0.000      0.000     0.000 A WTR

SPOOL  4
  200.00E  28.69   31.02    29.13    694.43  -0.181  -1484.8   -0.674   -0.657   -0.043  984.941 1001.100   44.300F

  200.00A  31.02   -1.090   -1.250   993.970 0.000   -5.556    994.009   -1.222   -6.229      0.000      0.000     0.000 A WTR

SPOOL  4
  210.00E  29.13   30.73    30.29    694.43  -0.177  -1457.0   -0.649   -0.637   -0.065  967.868 1001.100   44.300F

  210.00A  30.73   -1.090   -1.250   986.439 0.000   -5.514    994.100   -1.211   -6.171      0.000      0.000     0.000 A WTR

SPOOL  4
  220.00E  29.13   30.88    30.29    694.43  -0.153  -1457.9   -0.656   -0.646   -0.049  976.238 1001.100   44.300E

  220.00A  30.88   -1.090   -1.250   990.131 0.000   -5.535    994.055   -1.211   -6.173      0.000      0.000     0.000 A WTR

SPOOL  4
  230.00E  29.13   30.88    29.42    694.43  -0.181  -1465.0   -0.649   -0.650   -0.059  967.868 1001.100   44.300E
```

230.00A	30.88	-1.090	-1.250	986.439	0.000	-5.514	994.055	-1.214	-6.188	0.000	0.000	0.000	A WTR

SPOOL 4

240.00E	28.98	31.17	29.71	694.43	-0.188	-1483.6	-0.663	-0.655	-0.055	990.941	1001.100	44.300E	
240.00A	31.17	-1.090	-1.250	996.617	0.000	-5.571	993.963	-1.222	-6.227	0.000	0.000	0.000	A WTR

SPOOL 4

250.00E	29.13	30.88	29.42	694.43	-0.174	-1451.9	-0.645	-0.650	-0.051	973.413	1001.100	44.300E	
250.00A	30.88	-1.090	-1.250	988.885	0.000	-5.528	994.055	-1.209	-6.160	0.000	0.000	0.000	A WTR

SPOOL 4

260.00E	29.13	31.02	29.71	694.43	-0.174	-1490.9	-0.656	-0.657	-0.067	954.592	1001.100	44.300E	
260.00A	31.02	-1.090	-1.250	980.582	0.000	-5.482	994.009	-1.225	-6.242	0.000	0.000	0.000	A WTR

SPOOL 4

270.00E	29.13	31.17	29.57	694.43	-0.174	-1473.3	-0.660	-0.646	-0.059	973.413	1001.100	44.300E	
270.00A	31.17	-1.090	-1.250	988.885	0.000	-5.528	993.963	-1.217	-6.205	0.000	0.000	0.000	A WTR

SPOOL 4

280.00E	29.13	31.02	29.71	694.43	-0.108	-1028.5	-0.478	-0.458	-0.041	970.623	1001.100	44.300E	
280.00A	31.02	-0.854	-0.967	987.654	0.000	-4.325	994.009	-1.017	-5.185	0.000	0.000	0.000	A WTR

SPOOL 4

290.00E	29.13	31.46	29.71	694.43	-0.094	-932.5	-0.430	-0.410	-0.053	979.101	1001.100	44.300E	
290.00A	31.46	-0.884	-1.002	991.394	0.000	-4.491	993.871	-0.969	-4.936	0.000	0.000	0.000	A WTR

SPOOL 4

300.00E	29.13	31.46	29.57	694.43	-0.028	-393.6	-0.200	-0.181	-0.039	970.623	1001.100	44.300E	
300.00A	31.46	-0.559	-0.614	987.654	0.000	-2.830	993.871	-0.629	-3.207	0.000	0.000	0.000	A WTR

SPOOL 4

310.00E	29.27	31.17	29.86	694.43	-0.056	-686.6	-0.334	-0.296	-0.049	973.413	1001.100	44.300E	
310.00A	31.17	-0.736	-0.826	988.885	0.000	-3.731	993.963	-0.831	-4.236	0.000	0.000	0.000	A WTR

SPOOL 4

320.00E	29.42	31.46	29.71	694.43	-0.056	-684.2	-0.323	-0.310	-0.043	984.941	1001.100	44.300E	
320.00A	31.46	-0.736	-0.826	993.970	0.000	-3.751	993.871	-0.830	-4.228	0.000	0.000	0.000	A WTR

SPOOL 4

330.00E	29.27	31.46	30.00	694.43	-0.049	-684.4	-0.323	-0.307	-0.047	957.184	1001.100	44.300E	
330.00A	31.46	-0.736	-0.826	981.725	0.000	-3.704	993.871	-0.830	-4.229	0.000	0.000	0.000	A WTR

SPOOL 4

340.00E	29.42	31.46	29.86	694.43	-0.056	-684.9	-0.320	-0.303	-0.055	970.623	1001.100	44.300E	
340.00A	31.46	-0.765	-0.861	987.654	0.000	-3.876	993.871	-0.830	-4.23[illegible]	0.000	0.000	0.000	A WTR

SPOOL 4

350.00E	29.57	31.61	30.15	694.43	-0.056	-701.5	-0.325	-0.316	-0.051	973.413	1001.100	44.300E	
350.00A	31.61	-0.795	-0.896	988.885	0.000	-4.031	993.825	-0.840	-4.281	0.000	0.000	0.000	A WTR

SPOOL 4

360.00E	29.57	31.46	30.29	694.43	-0.056	-682.1	-0.329	-0.303	-0.043	970.623	1001.100	44.300E	
360.00A	31.46	-0.765	-0.861	987.654	0.000	-3.876	993.871	-0.828	-4.222	0.000	0.000	0.000	A WTR

SPOOL 4

370.00E	29.71	31.61	30.29	694.43	-0.059	-683.6	-0.334	-0.307	-0.035	979.101	1001.100	44.300E	
370.00A	31.61	-0.765	-0.861	991.394	0.000	-3.891	993.825	-0.829	-4.227	0.000	0.000	0.000	A WTR

SPOOL 4

380.00E	29.71	31.61	30.00	694.43	-0.049	-694.3	-0.331	-0.318	-0.037	970.623	1001.100	44.300E	
380.00A	31.61	-0.765	-0.861	987.654	0.000	-3.876	993.825	-0.836	-4.259	0.000	0.000	0.000	A WTR

SPOOL 4

390.00E	29.71	31.61	30.29	694.43	0.042	-64.4	-0.067	-0.045	-0.033	990.941	1001.100	44.300E	
390.00A	31.61	-0.136	-0.120	996.617	0.000	-0.697	993.825	-0.255	-1.297	0.000	0.000	0.000	A WTR

SPOOL 4

400.00E	29.57	31.75	29.86	694.43	0.047	-62.3	-0.069	-0.045	-0.030	987.658	1001.100	44.300E	
400.00A	31.75	-0.198	-0.190	986.439	0.000	-0.999	993.778	-0.250	-1.276	0.000	0.000	0.000	G WTR

SPOOL 4

410.00E	29.42	31.61	30.29	694.43	0.042	-64.7	-0.060	-0.048	-0.037	973.413	1001.100	44.300E	
410.00A	31.61	-0.136	-0.120	988.885	0.000	-0.692	993.825	-0.255	-1.300	0.000	0.000	0.000	G WTR

SPOOL 4

420.00E	29.71	31.75	30.29	694.43	0.042	-53.0	-0.064	-0.043	-0.028	973.413	1001.100	44.300E	
420.00A	31.75	-0.198	-0.190	988.885	0.000	-1.002	993.778	-0.231	-1.177	0.000	0.000	0.000	G WTR

SPOOL 4

430.00E	29.57	31.75	30.29	694.43	0.038	-58.8	-0.064	-0.045	-0.032	987.921	1001.100	44.300E	
430.00A	31.75	-0.136	-0.120	995.285	0.000	-0.696	993.778	-0.243	-1.239	0.000	0.000	0.000	G WTR

SPOOL 4

440.00E	29.71	31.75	30.59	694.43	0.042	-54.9	-0.058	-0.050	-0.038	987.888	1001.100	44.300E	
440.00A	31.75	-0.136	-0.120	986.439	0.000	-0.690	993.778	-0.257	-1.198	0.000	0.000	0.000	G WTR

SPOOL 4

450.00E	29.71	32.04	30.29	694.43	0.045	-58.8	-0.064	-0.045	-0.032	970.623	1001.100	44.300E	
450.00A	32.04	-0.136	-0.120	987.654	0.000	-0.691	993.685	-0.243	-1.239	0.000	0.000	0.000	G WTR

SPOOL 4

460.00E	29.71	32.04	30.29	694.43	0.031	-57.0	-0.064	-0.041	-0.033	987.921	1001.100	44.300E	
460.00A	32.04	-0.136	-0.120	995.285	0.000	-0.696	993.685	-0.240	-1.231	0.000	0.000	0.000	G WTR

SPOOL 4

470.00E	29.71	32.04	30.73	694.43	0.045	-57.0	-0.060	-0.047	-0.032	979.101	1001.100	44.300E	
470.00A	32.04	-0.136	-0.120	991.394	0.000	-0.694	993.685	-0.239	-1.220	0.000	0.000	0.000	G WTR

SPOOL 4

480.00E	29.71	32.04	30.44	[illegible]	0.014	[illegible]	[illegible]	[illegible]	[illegible]	[illegible]	[illegible]	[illegible]	

[illegible]	[illegible]	[illegible]	[illegible]	[illegible]	[illegible]	[illegible]	[illegible]	[illegible]	[illegible]	[illegible]	[illegible]	[illegible]	
480.00A	32.04	0.108	0.163	985.238	0.000	0.545	993.685	-0.092	-0.462	0.000	0.000	0.000	A WIR
SPOOL 4													
490.00E	29.71	31.75	30.29	191.25	-0.028	-13.6	-0.040	-0.021	-0.082	987.921	1001.100	44.300E	
490.00A	31.75	0.108	0.163	995.285	0.000	0.551	993.778	-0.117	-0.586	0.000	0.000	0.000	A WIR
SPOOL 4													
500.00E	149.84	149.10	0.00	*******	-0.000	-0.0	-7.399	-55.179	46.526	1001.100	0.000	0.000E	SH DL
500.00A	149.10	882.846	871.150	441.644	0.000	*******	918.522	-0.001	-0.005	0.000	0.000	0.000	A WIR

ENGINEERING UNITS CONVERSION RESULTS

DATE 03-JUL-79 RUN NO. 11

TIME (SEC)	TW	TF (DEG. CELSIUS)	TS	PA (KPA)	PD (KPA)	DTT (KG/M*SEC**2)	DF1	DF2 (KG-M/SEC**2)	DF3	GD1	GD2	GD3 (KG/M3)	FLAGS
SPOOL 2													
0.00E	21.47	21.62	0.00	695.75	-0.000	28.2	0.007	0.017	-0.001	1001.100	1001.100	44.300E	

ANALYSIS OF DATA

TIME (SEC)	FLUID TEMP (CEL)	--TURB VELOCITY-- FTW (M/SEC)	FTA (M/SEC)	RHOF (KG/M**3)	VOID	MAFT (KG/SEC)	WATER DENS (KG/M**3)	WATER VEL (M/SEC)	WATER MAFW (KG/SEC)	STEAM DENS (KG/M**3)	STEAM VEL (M/SEC)	STEAM MAFW (KG/SEC)	
0.00A	21.62	0.121	0.142	1001.099	0.000	0.621	996.719	0.168	0.860	0.000	0.000	0.000	A WTR
SPOOL 2													
10.00E	21.76	22.06	0.00	695.75	-0.000	23.6	0.001	0.015	0.003	1001.100	1001.100	44.300E	
10.00A	22.06	0.151	0.175	1001.099	0.000	0.775	996.602	0.154	0.786	0.000	0.000	0.000	A WTR
SPOOL 2													
20.00E	22.06	21.62	0.00	695.75	-0.000	21.2	-0.001	0.015	0.003	1001.100	1001.100	44.300E	
20.00A	21.62	0.121	0.142	1001.099	0.000	0.621	996.719	0.146	0.746	0.000	0.000	0.000	A WTR
SPOOL 2													
30.00E	22.06	21.76	0.00	695.75	-0.000	25.9	0.001	0.017	0.003	1001.100	1001.100	44.300E	
30.00A	21.76	0.121	0.142	1001.099	0.000	0.621	996.680	0.161	0.824	0.000	0.000	0.000	A WTR
SPOOL 2													
40.00E	21.62	22.06	0.00	695.75	-0.000	21.1	0.007	0.013	-0.003	1001.100	1001.100	44.300E	
40.00A	22.06	0.151	0.175	1001.099	0.000	0.775	996.602	0.146	0.744	0.000	0.000	0.000	A WTR
SPOOL 2													
50.00E	21.17	22.06	0.00	695.75	-0.000	23.5	0.005	0.015	-0.001	1001.100	1001.100	44.300E	
50.00A	22.06	0.121	0.142	1001.099	0.000	0.621	996.602	0.154	0.785	0.000	0.000	0.000	A WTR

```
SPOOL  2
  60.00E  21.76   21.91    0.00    695.75   -0.000      16.4    0.001    0.015   -0.003 1001.100 1001.100   44.300E

  60.00A  21.91    0.121    0.142  1001.099 0.000    0.621    996.641    0.128    0.655     0.000     0.000    0.000 A WTR

SPOOL  2
  70.00E  23.70   22.06    0.00    695.75   -0.000      21.2    0.005    0.013   -0.001 1001.100 1001.100   44.300E

  70.00A  22.06    0.121    0.142  1001.099 0.000    0.621    996.602    0.146    0.744     0.000     0.000    0.000 A WTR

SPOOL  2
  80.00E  24.75   22.51    0.00    695.75   -0.000      91.9    0.039    0.032    0.003 1001.100 1001.100   44.300E

  80.00A  22.51    0.270    0.304  1001.099 0.000    1.388    996.483    0.304    1.552     0.000     0.000    0.000 A WTR

SPOOL  2
  90.00E  26.36   23.26    0.00    695.75   -0.000     570.6    0.247    0.242    0.007 1001.100 1001.100   44.300E

  90.00A  23.26    0.718    0.788  1001.099 0.000    3.685    996.282    0.757    3.866     0.000     0.000    0.000 A WTR

SPOOL  2
 100.00E  26.94   24.15    0.00    695.75   -0.000     588.2    0.246    0.261    0.007 1001.100 1001.100   44.300E

 100.00A  24.15    0.748    0.820  1001.099 0.000    3.838    996.037    0.768    3.925     0.000     0.000    0.000 A WTR

SPOOL  2
 110.00E  27.09   24.75    0.00    695.75   -0.000     598.3    0.263    0.265   -0.005 1001.100 1001.100   44.300E

 110.00A  24.75    0.748    0.820  1001.099 0.000    3.838    995.872    0.775    3.958     0.000     0.000    0.000 A WTR

SPOOL  2
 120.00E  27.52   25.19    0.00    695.75   -0.000     584.4    0.251    0.261   -0.003 1001.100 1001.100   44.300E

 120.00A  25.19    0.718    0.788  1001.099 0.000    3.685    995.747    0.766    3.912     0.000     0.000    0.000 A WTR

SPOOL  2
 130.00E  27.38   25.63    0.00    695.75   -0.000     596.2    0.261    0.257    0.003 1001.100 1001.100   44.300E

 130.00A  25.63    0.718    0.788  1001.099 0.000    3.685    995.623    0.774    3.951     0.000     0.000    0.000 A WTR

SPOOL  2
```

140.00E 27.52 25.77 0.00 695.75 -0.000 588.3 0.253 0.261 -0.001 1001.100 1001.100 44.300E

140.00A 25.77 0.748 0.820 1001.099 0.000 3.838 995.582 0.769 3.924 0.000 0.000 0.000 A WTR

SPOOL 2
150.00E 27.38 25.92 0.00 695.75 -0.000 588.2 0.242 0.257 0.014 1001.100 1001.100 44.300E

150.00A 25.92 0.777 0.853 1001.099 0.000 3.991 995.540 0.769 3.924 0.000 0.000 0.000 A WTR

SPOOL 2
160.00E 27.38 25.92 0.00 695.75 -0.000 588.3 0.253 0.261 -0.001 1001.100 1001.100 44.300E

160.00A 25.92 0.748 0.820 1001.099 0.000 3.838 995.540 0.769 3.924 0.000 0.000 0.000 A WTR

SPOOL 2
170.00E 27.67 26.21 0.00 695.75 -0.000 582.4 0.246 0.265 -0.003 1001.100 1001.100 44.300E

170.00A 26.21 0.718 0.788 1001.099 0.000 3.685 995.457 0.765 3.904 0.000 0.000 0.000 A WTR

SPOOL 2
180.00E 27.96 26.06 0.00 695.75 -0.000 755.7 0.339 0.345 -0.005 1001.100 1001.100 44.300E

180.00A 26.06 0.897 0.982 1001.099 0.000 4.603 995.498 0.871 4.448 0.000 0.000 0.000 A WTR

SPOOL 2
190.00E 27.96 26.50 0.00 695.75 -0.000 802.9 0.357 0.370 -0.001 1001.100 1001.100 44.300E

190.00A 26.50 0.897 0.982 1001.099 0.000 4.603 995.372 0.898 4.584 0.000 0.000 0.000 A WTR

SPOOL 2
200.00E 27.81 26.79 0.00 695.75 -0.000 989.5 0.445 0.453 0.011 1001.100 1001.100 44.300E

200.00A 26.79 0.986 1.079 1001.099 0.000 5.061 995.288 0.997 5.089 0.000 0.000 0.000 A WTR

SPOOL 2
210.00E 27.96 26.79 0.00 695.75 -0.000 1240.8 0.569 0.580 -0.014 1001.100 1001.100 44.300E

210.00A 26.79 1.135 1.240 1001.099 0.000 5.826 995.288 1.117 5.698 0.000 0.000 0.000 A WTR

SPOOL 2
220.00E 27.96 26.79 0.00 695.75 -0.000 1238.6 0.573 0.583 -0.005 1001.100 1001.100 44.300E

```
 220.00A  26.79    1.135    1.240  1001.099 0.000    5.826    995.288    1.116    5.693      0.000      0.000     0.000 A WTR

SPOOL  2
 230.00E  27.96   26.65    0.00    695.75   -0.000    1252.4    0.575    0.583    0.007 1001.100 1001.100    44.300E

 230.00A  26.65    1.135    1.240  1001.099 0.000    5.826    995.330    1.122    5.725      0.000      0.000     0.000 A WTR

SPOOL  2
 240.00E  27.96   26.79    0.00    695.75   -0.000    1240.4    0.566    0.585    0.003 1001.100 1001.100    44.300E

 240.00A  26.79    1.135    1.240  1001.099 0.000    5.826    995.288    1.116    5.697      0.000      0.000     0.000 A WTR

SPOOL  2
 250.00E  27.96   26.79    0.00    695.75   -0.000    1274.4    0.605    0.580    0.003 1001.100 1001.100    44.300E

 250.00A  26.79    1.075    1.176  1001.099 0.000    5.520    995.288    1.132    5.775      0.000      0.000     0.000 A WTR

SPOOL  2
 260.00E  28.11   27.09    0.00    695.75   -0.000    1230.5    0.558    0.583    0.003 1001.100 1001.100    44.300E

 260.00A  27.09    1.105    1.208  1001.099 0.000    5.673    995.203    1.112    5.674      0.000      0.000     0.000 A WTR

SPOOL  2
 270.00E  27.96   27.23    0.00    695.75   -0.000    1236.6    0.587    0.564   -0.001 1001.100 1001.100    44.300E

 270.00A  27.23    1.135    1.240  1001.099 0.000    5.826    995.160    1.115    5.688      0.000      0.000     0.000 A WTR

SPOOL  2
 280.00E  28.11   27.09    0.00    695.75   -0.000    1246.5    0.577    0.587   -0.005 1001.100 1001.100    44.300E

 280.00A  27.09    1.135    1.240  1001.099 0.000    5.826    995.203    1.119    5.711      0.000      0.000     0.000 A WTR

SPOOL  2
 290.00E  28.25   27.23    0.00    695.75   -0.000     973.6    0.435    0.446    0.013 1001.100 1001.100    44.300E

 290.00A  27.23    0.986    1.079  1001.099 0.000    5.061    995.160    0.989    5.047      0.000      0.000     0.000 A WTR

SPOOL  2
 300.00E  27.96   27.09    0.00    695.75   -0.000     785.2    0.347    0.366   -0.005 1001.100 1001.100    44.300E

 300.00A  27.09    0.897    0.982  1001.099 0.000    4.603    995.203    0.888    4.533      0.000      0.000     0.000 A WTR
```

```
SPOOL  2
  310.00E  28.25   27.38    0.00    695.75   -0.000     741.7    0.312    0.335    0.018 1001.100 1001.100   44.300E

  310.00A  27.38    0.837    0.917  1001.099 0.000    4.297   995.117    0.863    4.405      0.000      0.000      0.000 A WTR

SPOOL  2
  320.00E  28.11   27.52    0.00    695.75   -0.000     479.9    0.187    0.211    0.009 1001.100 1001.100   44.300E

  320.00A  27.52    0.599    0.659  1001.099 0.000    3.073   995.074    0.694    3.543      0.000      0.000      0.000 A WTR

SPOOL  2
  330.00E  28.11   27.38    0.00    695.75   -0.000     594.3    0.261    0.263   -0.005 1001.100 1001.100   44.300E

  330.00A  27.38    0.718    0.788  1001.099 0.000    3.685   995.117    0.773    3.943      0.000      0.000      0.000 A WTR

SPOOL  2
  340.00E  28.25   27.52    0.00    695.75   -0.000     596.1    0.257    0.252    0.013 1001.100 1001.100   44.300E

  340.00A  27.52    0.748    0.820  1001.099 0.000    3.838   995.074    0.774    3.949      0.000      0.000      0.000 A WTR

SPOOL  2
  350.00E  28.25   27.67    0.00    695.75   -0.000     584.4    0.249    0.263   -0.003 1001.100 1001.100   44.300E

  350.00A  27.67    0.748    0.820  1001.099 0.000    3.838   995.031    0.766    3.910      0.000      0.000      0.000 A WTR

SPOOL  2
  360.00E  28.54   27.67    0.00    695.75   -0.000     594.2    0.253    0.267   -0.001 1001.100 1001.100   44.300E

  360.00A  27.67    0.718    0.788  1001.099 0.000    3.685   995.031    0.773    3.943      0.000      0.000      0.000 A WTR

SPOOL  2
  370.00E  28.40   27.67    0.00    695.75   -0.000     588.5    0.257    0.269   -0.012 1001.100 1001.100   44.300E

  370.00A  27.67    0.777    0.853  1001.099 0.000    3.991   995.031    0.769    3.924      0.000      0.000      0.000 A WTR

SPOOL  2
  380.00E  28.54   27.67    0.00    695.75   -0.000     592.4    0.261    0.261   -0.005 1001.100 1001.100   44.300E

  380.00A  27.67    0.718    0.788  1001.099 0.000    3.685   995.031    0.772    3.937      0.000      0.000      0.000 A WTR
```

SPOOL 2

390.00E	28.69	27.67	0.00	695.75	-0.000	580.6	0.251	0.265	-0.011	1001.100	1001.100	44.300E	
390.00A	27.67	0.718	0.788	1001.099	0.000	3.685	995.031	0.764	3.897	0.000	0.000	0.000	A WTR

SPOOL 2

400.00E	28.69	27.67	0.00	695.75	-0.000	30.6	0.005	0.017	0.003	1001.100	1001.100	44.300E	
400.00A	27.67	0.121	0.142	1001.099	0.000	0.621	995.031	0.175	0.895	0.000	0.000	0.000	A WTR

SPOOL 2

410.00E	28.54	27.52	0.00	695.75	-0.000	28.3	0.005	0.015	0.003	1001.100	1001.100	44.300E	
410.00A	27.52	0.151	0.175	1001.099	0.000	0.775	995.074	0.169	0.860	0.000	0.000	0.000	A WTR

SPOOL 2

420.00E	28.69	27.96	0.00	695.75	-0.000	28.2	0.007	0.017	-0.001	1001.100	1001.100	44.300E	
420.00A	27.96	0.121	0.142	1001.099	0.000	0.621	994.945	0.168	0.859	0.000	0.000	0.000	A WTR

SPOOL 2

430.00E	28.69	27.67	0.00	695.75	-0.000	33.0	0.007	0.017	0.003	1001.100	1001.100	44.300E	
430.00A	27.67	0.121	0.142	1001.099	0.000	0.621	995.031	0.182	0.929	0.000	0.000	0.000	A WTR

SPOOL 2

440.00E	28.69	27.67	0.00	695.75	-0.000	33.0	0.007	0.017	0.003	1001.100	1001.100	44.300E	
440.00A	27.67	0.151	0.175	1001.099	0.000	0.775	995.031	0.182	0.929	0.000	0.000	0.000	A WTR

SPOOL 2

450.00E	28.69	27.81	0.00	695.75	-0.000	28.3	0.003	0.017	0.003	1001.100	1001.100	44.300E	
450.00A	27.81	0.151	0.175	1001.099	0.000	0.775	994.988	0.169	0.860	0.000	0.000	0.000	A WTR

SPOOL 2

460.00E	28.69	27.96	0.00	695.75	-0.000	37.7	0.010	0.017	0.003	1001.100	1001.100	44.300E	
460.00A	27.96	0.181	0.207	1001.099	0.000	0.928	994.945	0.195	0.993	0.000	0.000	0.000	A WTR

SPOOL 2

470.00E	28.89	27.67	0.00	695.75	-0.000	33.3	0.012	0.013	0.001	1001.100	1001.100	44.300E	
470.00A	27.67	0.121	0.142	1001.099	0.000	0.621	995.031	0.188	0.961	0.000	0.000	0.000	A WTR
SPOOL 2													
480.00E	28.54	27.96	0.00	695.75	-0.000	257.8	0.077	0.130	0.003	1001.100	1001.100	44.300E	
480.00A	27.96	0.450	0.498	1001.099	0.000	2.308	994.945	0.509	2.597	0.000	0.000	0.000	A WTR
SPOOL 2													
490.00E	28.54	27.96	0.00	695.75	-0.000	-17.8	-0.022	-0.009	0.003	1001.100	1001.100	44.300E	
490.00A	27.96	-0.088	-0.084	1001.099	0.000	-0.452	994.945	-0.134	-0.682	0.000	0.000	0.000	A WTR
SPOOL 2													
500.00E	28.54	27.67	0.00	695.75	-0.000	-7.1	-0.007	-0.007	0.003	1001.100	1001.100	44.300E	
500.00A	27.67	-0.088	-0.084	1001.099	0.000	-0.452	995.031	-0.084	-0.431	0.000	0.000	0.000	A WTR
SPOOL 2													
510.00E	28.54	27.52	0.00	266.06	-0.024	-19.0	-0.022	-0.011	0.003	1001.100	1001.100	44.300E	
510.00A	27.52	0.002	0.013	1001.099	0.000	0.008	995.074	-0.138	-0.705	0.000	0.000	0.000	A WTR
SPOOL 2													
520.00E	28.54	27.09	0.00	203.85	-0.027	-17.8	-0.022	-0.009	0.003	1001.100	1001.100	44.300E	
520.00A	27.09	-0.118	-0.116	1001.099	0.000	-0.605	995.203	-0.134	-0.682	0.000	0.000	0.000	A WTR
SPOOL 2													
530.00E	35.55	35.11	0.00	79.77	0.808	1124.5	0.487	0.500	0.053	1001.100	1001.100	44.300E	
530.00A	35.11	-1.009	-1.085	1001.099	0.000	-5.181	992.680	1.064	5.418	0.000	0.000	0.000	A WTR
SPOOL 2													
540.00E	35.55	35.11	0.00	79.77	0.808	1114.6	0.482	0.496	0.053	1001.100	1001.100	44.300E	
540.00A	35.11	-1.009	-1.085	1001.099	0.000	-5.181	992.680	1.060	5.393	0.000	0.000	0.000	A WTR

ENGINEERING UNITS CONVERSION RESULTS

DATE 04-JUL-79 RUN NO. 12

TIME (SEC)	TW	TF (DEG. CELSIUS)	TS	PA (KPA)	PD (KPA)	DTT (KG/M*SEC**2)	DF1	DF2 (KG-M/SEC**2)	DF3	GD1	GD2	GD3 (LB/HR)	FLUID
SPOOL 2													
0.00E	28.84	27.09	0.00	695.75	-0.000	25.9	0.007	0.015	-0.001	1001.100	1001.100	44.300E	

ANALYSIS OF DATA

TIME (SEC)	FLUI. TEMP (CEL)	--TURB VELOCITY-- FTW (M/SEC)	FTA (M/SEC)	RHOF (KG/M**3)	VOID	MAFT (KG/SEC)	WATER DENS (KG/M**3)	WATER VEL (M/SEC)	WATER MAFW (KG/SEC)	STEAM DENS (LB/M**3)	STEAM VEL (M/SEC)	STEAM MAFW (LB/SEC)	
0.00A	27.09	0.121	0.142	1001.099	0.000	0.621	995.203	0.161	0.823	0.000	0.000	0.000	A WTR
SPOOL 2													
10.00E	28.98	27.38	0.00	695.75	-0.000	40.1	0.012	0.015	0.005	1001.100	1001.100	44.300E	
10.00A	27.38	0.121	0.142	1001.099	0.000	0.621	995.117	0.201	1.025	0.000	0.000	0.000	A WTR
SPOOL 2													
20.00E	28.69	27.52	0.00	695.75	0.014	23.6	0.003	0.013	0.003	1001.100	1001.100	44.300E	
20.00A	27.52	0.181	0.207	1001.099	0.000	0.928	995.074	0.154	0.786	0.000	0.000	0.000	A WTR
SPOOL 2													
30.00E	29.13	27.38	0.00	695.75	0.003	40.1	0.010	0.017	0.005	1001.100	1001.100	44.300E	
30.00A	27.38	0.181	0.207	1001.099	0.000	0.928	995.117	0.201	1.025	0.000	0.000	0.000	A WTR
SPOOL 2													
40.00E	29.13	27.96	0.00	695.75	0.014	40.1	0.012	0.015	0.005	1001.100	1001.100	44.300E	
40.00A	27.96	0.151	0.175	1001.099	0.000	0.775	994.945	0.201	1.025	0.000	0.000	0.000	A WTR
SPOOL 2													
50.00E	29.13	27.67	0.00	695.75	-0.000	37.7	0.010	0.017	0.003	1001.100	1001.100	44.300E	
50.00A	27.67	0.121	0.142	1001.099	0.000	0.621	995.031	0.195	0.993	0.000	0.000	0.000	A WTR

```
SPOOL  2
  60.00E  28.69   27.38    0.00    695.75    0.007      18.9   -0.003    0.013    0.005 1001.100 1001.100   44.300E

  60.00A  27.38    0.121    0.142  1001.099 0.000    0.621   995.117    0.138    0.703     0.000     0.000    0.000 A WTR

SPOOL  2
  70.00E  29.42   27.52    0.00    695.75    0.112     560.9    0.249    0.242   -0.005 1001.100 1001.100   44.300E

  70.00A  27.52    0.688    0.756  1001.099 0.000    3.532   995.074    0.751    3.831     0.000     0.000    0.000 A WTR

SPOOL  2
  80.00E  29.27   28.11    0.00    695.75    0.112     584.4    0.251    0.261   -0.003 1001.100 1001.100   44.300E

  80.00A  28.11    0.718    0.788  1001.099 0.000    3.685   994.902    0.766    3.910     0.000     0.000    0.000 A WTR

SPOOL  2
  90.00E  29.42   28.25    0.00    695.75    0.108     590.3    0.265    0.248    0.003 1001.100 1001.100   44.300E

  90.00A  28.25    0.718    0.788  1001.099 0.000    3.685   994.858    0.770    3.930     0.000     0.000    0.000 A WTR

SPOOL  2
 100.00E  29.42   28.40    0.00    695.75    0.108     584.5    0.253    0.261   -0.005 1001.100 1001.100   44.300E

 100.00A  28.40    0.718    0.788  1001.099 0.000    3.685   994.814    0.766    3.910     0.000     0.000    0.000 A WTR

SPOOL  2
 110.00E  29.57   28.54    0.00    695.75    0.108     588.3    0.249    0.263    0.001 1001.100 1001.100   44.300E

 110.00A  28.54    0.777    0.853  1001.099 0.000    3.991   994.771    0.769    3.923     0.000     0.000    0.000 A WTR

SPOOL  2
 120.00E  29.57   28.69    0.00    695.75    0.122     610.1    0.267    0.273   -0.005 1001.100 1001.100   44.300E

 120.00A  28.69    0.748    0.820  1001.099 0.000    3.838   994.727    0.783    3.994     0.000     0.000    0.000 A WTR

SPOOL  2
 130.00E  29.57   28.69    0.00    695.75    0.112     594.1    0.246    0.259    0.014 1001.100 1001.100   44.300E

 130.00A  28.69    0.718    0.788  1001.099 0.000    3.685   994.727    0.773    3.942     0.000     0.000    0.000 A WTR

SPOOL  2
 140.00E  29.71   28.84    0.00    695.75    0.105     578.4    0.244    0.254    0.005 1001.100 1001.100   44.300E
```

140.00A	28.84	0.718	0.788	1001.099	0.000	3.685	994.683	0.763	3.889	0.000	[illegible]	[illegible]	[illegible]
SPOOL 2													
150.00E	29.71	28.84	0.00	695.75	0.108	604.0	0.267	0.250	0.013	1001.100	1001.100	44.[illegible]	
150.00A	28.84	0.748	0.820	1001.099	0.000	3.838	994.683	0.779	3.975	0.000	[illegible]	[illegible]	[illegible]
SPOOL 2													
160.00E	29.71	28.84	0.00	695.75	0.132	613.8	0.263	0.265	0.011	1001.100	1001.100	44.[illegible]	
160.00A	28.84	0.748	0.820	1001.099	0.000	3.838	994.683	0.786	4.007	0.000	[illegible]	[illegible]	[illegible]
SPOOL 2													
170.00E	29.71	29.13	0.00	695.75	0.168	838.5	0.364	0.363	0.01	1001.100	1001.100	44.[illegible]	
170.00A	29.13	0.897	0.982	1001.099	0.000	4.603	994.594	0.913	4.683	0.000	[illegible]	[illegible]	[illegible]
SPOOL 2													
180.00E	29.71	29.13	0.00	695.75	0.223	1085.4	0.50	0.51	0.01	1001.100	1001.100	44.[illegible]	
180.00A	29.13	1.046	1.143	1001.099	0.000	5.[illegible]	994.594	1.045	[illegible]	[illegible]	[illegible]	[illegible]	[illegible]
SPOOL 2													
190.00E	29.86	29.13	0.00	695.75	0.247	1228.0	0.567	0.575	0.010	1001.100	1001.100	44.[illegible]	
190.00A	29.13	1.105	1.205	1001.099	0.000	5.673	994.594	1.11	[illegible]	[illegible]	[illegible]	[illegible]	[illegible]
SPOOL 2													
200.00E	29.86	29.13	0.00	695.75	0.250	1248.6	0.587	0.57	0.005	1001.100	1001.100	44.[illegible]	
200.00A	29.13	1.165	1.272	1001.099	0.000	5.979	994.594	1.1[illegible]	5.714	[illegible]	[illegible]	[illegible]	[illegible]
SPOOL 2													
210.00E	30.00	29.27	0.00	695.75	0.257	1236.7	0.577	0.587	0.011	1001.100	1001.100	44.[illegible]	
210.00A	29.27	1.105	1.208	1001.099	0.000	5.673	994.[illegible]	1.115	5.[illegible]	[illegible]	[illegible]	[illegible]	[illegible]
SPOOL 2													
220.00E	29.86	29.27	0.00	695.75	0.260	1.5[illegible].1	0.567	0.5[illegible]	0.0[illegible]	1001.100	1001.100	44.[illegible]	

220.00A	29.27	1.105	1.208	1001.099	0.000	5.673	994.550	1.122	5.722	0.000	0.000	0.000	A WTR
SPOOL 2													
230.00E	30.00	29.42	0.00	695.75	0.254	1246.4	0.569	0.585	0.001	1001.100	1001.100	44.300F	
230.00A	29.42	1.105	1.208	1001.099	0.000	5.673	994.506	1.120	5.709	0.000	0.000	0.000	A WTR
SPOOL 2													
240.00E	30.00	29.42	0.00	695.75	0.257	1248.6	0.581	0.593	-0.012	1001.100	1001.100	44.300F	
240.00A	29.42	1.135	1.240	1001.099	0.000	5.826	994.506	1.121	5.714	0.000	0.000	0.000	A WTR
SPOOL 2													
250.00E	30.00	29.42	0.00	695.75	0.244	1236.7	0.575	0.585	-0.011	1001.100	1001.100	44.300F	
250.00A	29.42	1.105	1.208	1001.099	0.000	5.673	994.506	1.115	5.686	0.000	0.000	0.000	A WTR
SPOOL 2													
260.00E	30.00	29.57	0.00	695.75	0.267	1310.3	0.612	0.614	-0.005	1001.100	1001.100	44.300F	
260.00A	29.57	1.135	1.240	1001.099	0.000	5.826	994.461	1.148	5.853	0.000	0.000	0.000	A WTR
SPOOL 2													
270.00E	30.29	29.57	0.00	695.75	0.176	901.9	0.402	0.413	0.009	1001.100	1001.100	44.300F	
270.00A	29.57	0.926	1.014	1001.099	0.000	4.755	994.461	0.952	4.856	0.000	0.000	0.000	A WTR
SPOOL 2													
280.00E	30.15	29.71	0.00	695.75	0.166	814.6	0.363	0.362	0.013	1001.100	1001.100	44.300F	
280.00A	29.71	0.897	0.982	1001.099	0.000	4.603	994.416	0.905	4.615	0.000	0.000	0.000	A WTR
SPOOL 2													
290.00E	30.29	29.71	0.00	695.75	0.115	592.2	0.251	0.265	0.001	1001.100	1001.100	44.300F	
290.00A	29.71	0.748	0.820	1001.099	0.000	3.838	994.416	0.772	3.935	0.000	0.000	0.000	A WTR
SPOOL 2													
300.00E	30.29	29.71	0.00	695.75	0.108	586.4	0.247	0.269	-0.005	1001.100	1001.100	44.300E	
300.00A	29.71	0.748	0.820	1001.099	0.000	3.838	994.416	0.768	3.916	0.000	0.000	0.000	A WTR

```
SPOOL  2
  310.00E  30.29   29.57    0.00   695.75   0.115    582.3   0.246   0.256   0.007 1001.100 1001.100   44.300E

  310.00A  29.57    0.748   0.820  1001.099 0.000   3.838  994.461   0.765   3.902    0.000    0.000    0.000 A WTR

SPOOL  2
  320.00E  30.44   29.86    0.00   695.75   0.115    600.1   0.263   0.259   0.003 1001.100 1001.100   44.300E

  320.00A  29.86    0.748   0.820  1001.099 0.000   3.838  994.372   0.777   3.961    0.000    0.000    0.000 A WTR

SPOOL  2
  330.00E  30.44   29.86    0.00   695.75   0.115    600.1   0.253   0.265   0.007 1001.100 1001.100   44.300E

  330.00A  29.86    0.748   0.820  1001.099 0.000   3.838  994.372   0.777   3.961    0.000    0.000    0.000 A WTR

SPOOL  2
  340.00E  30.44   29.86    0.00   695.75   0.112    596.3   0.261   0.265  -0.005 1001.100 1001.100   44.300E

  340.00A  29.86    0.748   0.820  1001.099 0.000   3.838  994.372   0.774   3.948    0.000    0.000    0.000 A WTR

SPOOL  2
  350.00E  30.44   30.00    0.00   695.75   0.108    582.4   0.253   0.252   0.003 1001.100 1001.100   44.300E

  350.00A  30.00    0.748   0.820  1001.099 0.000   3.838  994.327   0.765   3.902    0.000    0.000    0.000 A WTR

SPOOL  2
  360.00E  30.44   30.00    0.00   695.75   0.037    539.1   0.214   0.254  -0.003 1001.100 1001.100   44.300E

  360.00A  30.00    0.688   0.756  1001.099 0.000   3.532  994.327   0.736   3.754    0.000    0.000    0.000 A WTR

SPOOL  2
  370.00E  30.73   30.00    0.00   695.75   0.003     33.1   0.008   0.013   0.005 1001.100 1001.100   44.300E

  370.00A  30.00    0.121   0.142  1001.099 0.000   0.621  994.327   0.182   0.930    0.000    0.000    0.000 A WTR

SPOOL  2
  380.00E  30.44   30.00    0.00   695.75   0.007     30.6   0.005   0.017   0.003 1001.100 1001.100   44.300E

  380.00A  30.00    0.181   0.207  1001.099 0.000   0.928  994.327   0.176   0.895    0.000    0.000    0.000 A WTR
```

```
SPOOL  2
  390.00E  30.59   29.86    0.00    695.75    0.007      40.1    0.012    0.017    0.003 1001.100 1001.100   44.300E

  390.00A  29.86    0.121    0.142  1001.099 0.000    0.621    994.372    0.201    1.024      0.000      0.000    0.000 A WTR

SPOOL  2
  400.00E  30.73   30.00    0.00    695.75    0.003      33.0    0.010    0.013    0.003 1001.100 1001.100   44.300E

  400.00A  30.00    0.151    0.175  1001.099 0.000    0.775    994.327    0.182    0.929      0.000      0.000    0.000 A WTR

SPOOL  2
  410.00E  30.59   29.86    0.00    695.75    0.007      37.7    0.012    0.015    0.003 1001.100 1001.100   44.300E

  410.00A  29.86    0.151    0.175  1001.099 0.000    0.775    994.372    0.195    0.993      0.000      0.000    0.000 A WTR

SPOOL  2
  420.00E  30.59   29.86    0.00    695.75    0.003      30.6    0.010    0.013    0.001 1001.100 1001.100   44.300E

  420.00A  29.86    0.151    0.175  1001.099 0.000    0.775    994.372    0.176    0.895      0.000      0.000    0.000 A WTR

SPOOL  2
  430.00E  30.44   29.86    0.00    695.75    0.003      28.3    0.005    0.015    0.003 1001.100 1001.100   44.300E

  430.00A  29.86    0.121    0.142  1001.099 0.000    0.621    994.372    0.169    0.860      0.000      0.000    0.000 A WTR

SPOOL  2
  440.00E  30.59   29.71    0.00    695.75    0.007      30.7    0.007    0.015    0.003 1001.100 1001.100   44.300E

  440.00A  29.71    0.121    0.142  1001.099 0.000    0.621    994.416    0.176    0.895      0.000      0.000    0.000 A WTR

SPOOL  2
  450.00E  30.59   29.86    0.00    695.75    0.003      23.5    0.005    0.013    0.001 1001.100 1001.100   44.300E

  450.00A  29.86    0.151    0.175  1001.099 0.000    0.775    994.372    0.154    0.785      0.000      0.000    0.000 A WTR

SPOOL  2
  460.00E  30.59   29.86    .00     695.75   -0.010     -11.9   -0.014   -0.007    0.003 1001.100 1001.100   44.300E

  460.00A  29.86   -0.088   -0.084  1001.099 0.000   -0.452    994.372   -0.109   -0.557      0.000      0.000    0.000 A WTR

SPOOL  2
  470.00E  30.44   29.71    0.00    144.25   -0.014     -12.0   -0.014   -0.011    0.005 1001.100 1001.100   44.300E
```

470.00E	30.44	29.71	0.00	188.23	0.014	[illegible]	0.014	0.071	0.083	1001.100	1001.100	44.300E	
470.00A	29.71	-0.088	-0.084	1001.099	0.000	-0.452	994.416	-0.114	-0.534	0.000	0.000	0.000	A WTR
SPOOL 2													
480.00E	7.75	7.16	0.00	13.79	0.162	-3925.6	-0.007	-3.794	0.321	1001.100	1001.100	44.300E	
480.00A	7.16	0.002	0.013	1001.099	0.000	0.008	999.935	-1.981	-10.159	0.000	0.000	0.000	A WTR
SPOOL 2													
490.00E	7.16	7.01	0.00	13.79	0.162	-3925.6	-0.007	-3.794	0.321	1001.100	1001.100	44.300E	
490.00A	7.01	0.002	0.013	1001.099	0.000	0.008	999.962	-1.981	-10.159	0.000	0.000	0.000	A WTR

ENGINEERING UNITS CONVERSION RESULTS

DATE 04-JUL-79 RUN NO. 13

TIME (SEC)	TW	TF (DEG. CELSIUS)	TS	PA (KPA)	PD (KPA)	DTT (KG/M*SEC**2)	DF1	DF2 (KG-M/SEC**2)	DF3	GD1	GD2	GD3 (KG/M3)	FLAGS
SPOOL 2													
0.00E	21.76	24.45	0.00	695.75	-0.027	-108.6	-0.045	-0.038	-0.005	1001.100	1001.100	44.300F	

ANALYSIS OF DATA

TIME (SEC)	FLUID TEMP (CEL)	--TURB VELOCITY-- FTW (M/SEC)	FTA (M/SEC)	RHOF (KG/M**3)	VOID	MAFT (KG/SEC)	----------WATER---------- DENS (KG/M**3)	VEL (M/SEC)	MAFW (KG/SEC)	----------STEAM---------- DENS (KG/M**3)	VEL (M/SEC)	MAFW (KG/SEC)	
0.00A	24.45	-0.357	-0.374	1001.099	0.000	-1.832	995.955	-0.330	-1.686	0.000	0.000	0.000	A WTR
SPOOL 2													
10.00E	22.36	24.00	0.00	695.75	-0.027	-108.6	-0.049	-0.038	-0.001	1001.100	1001.100	44.300F	
10.00A	24.00	-0.357	-0.374	1001.099	0.000	-1.832	996.078	-0.330	-1.686	0.000	0.000	0.000	A WTR
SPOOL 2													
20.00E	22.36	24.00	0.00	695.75	-0.024	-105.5	-0.049	-0.036	-0.001	1001.100	1001.100	44.300E	
20.00A	24.00	-0.357	-0.374	1001.099	0.000	-1.832	996.078	-0.325	-1.662	0.000	0.000	0.000	A WTR
SPOOL 2													
30.00E	22.36	23.85	0.00	695.75	-0.024	-87.3	-0.039	-0.032	-0.003	1001.100	1001.100	44.300E	
30.00A	23.85	-0.357	-0.374	1001.099	0.000	-1.832	996.119	-0.296	-1.512	0.000	0.000	0.000	A WTR
SPOOL 2													
40.00E	23.26	23.85	0.00	695.75	-0.027	-99.5	-0.045	-0.036	-0.001	1001.100	1001.100	44.300E	
40.00A	23.85	-0.357	-0.374	1001.099	0.000	-1.832	996.119	-0.316	-1.614	0.000	0.000	0.000	A WTR
SPOOL 2													
50.00E	24.75	23.85	0.00	695.75	-0.027	-93.4	-0.045	-0.032	-0.001	1001.100	1001.100	44.300F	
50.00A	23.85	-0.357	-0.374	1001.099	0.000	-1.832	996.119	-0.306	-1.564	0.000	0.000	0.000	A WTR

SPOOL 2

60.00E	26.21	24.45	0.00	695.75	-0.020	-90.4	-0.041	-0.032	-0.003	1001.100	1001.100	44.300E
60.00A	24.45	-0.357	-0.374	1001.099	0.000	-1.832	995.955	-0.301	-1.538	0.000	0.000	0.000 A WTR

SPOOL 2

70.00E	29.42	25.63	0.00	695.75	-0.155	-712.2	-0.339	-0.315	0.007	1001.100	1001.100	44.300E
70.00A	25.63	-0.920	-0.988	1001.099	0.000	-4.725	995.623	-0.846	-4.318	0.000	0.000	0.000 A WTR

SPOOL 2

80.00E	30.73	26.79	0.00	695.75	-0.149	-696.9	-0.327	-0.308	0.001	1001.100	1001.100	44.300E
80.00A	26.79	-0.920	-0.988	1001.099	0.000	-4.725	995.288	-0.837	-4.270	0.000	0.000	0.000 A WTR

SPOOL 2

90.00E	31.17	27.81	0.00	695.75	-0.152	-703.3	-0.329	-0.319	0.009	1001.100	1001.100	44.300E
90.00A	27.81	-0.950	-1.020	1001.099	0.000	-4.877	994.988	-0.841	-4.289	0.000	0.000	0.000 A WTR

SPOOL 2

100.00E	31.46	28.25	0.00	695.75	-0.149	-701.1	-0.325	-0.319	0.007	1001.100	1001.100	44.300E
100.00A	28.25	-0.950	-1.020	1001.099	0.000	-4.877	994.858	-0.839	-4.282	0.000	0.000	0.000 A WTR

SPOOL 2

110.00E	31.46	28.84	0.00	695.75	-0.149	-725.4	-0.345	-0.323	0.009	1001.100	1001.100	44.300E
110.00A	28.84	-0.920	-0.988	1001.099	0.000	-4.725	994.683	-0.854	-4.356	0.000	0.000	0.000 A WTR

SPOOL 2

120.00E	31.46	29.13	0.00	695.75	-0.155	-712.1	-0.335	-0.323	0.011	1001.100	1001.100	44.300E
120.00A	29.13	-0.950	-1.020	1001.099	0.000	-4.877	994.594	-0.846	-4.315	0.000	0.000	0.000 A WTR

SPOOL 2

130.00E	31.46	29.27	0.00	695.75	-0.162	-712.1	-0.335	-0.323	0.011	1001.100	1001.100	44.300E
130.00A	29.27	-0.950	-1.020	1001.099	0.000	-4.877	994.550	-0.846	-4.315	0.000	0.000	0.000 A WTR

SPOOL 2

140.00E 31.46 29.57 0.00 695.75 -0.139 -692.9 -0.322 -0.313 0.007 1001.100 1001.100 44.300E

140.00A 29.57 -0.920 -0.988 1001.099 0.000 -4.725 994.461 -0.835 -4.257 0.000 0.000 0.000 A WTR

SPOOL 2
150.00E 31.46 29.71 0.00 695.75 -0.162 -707.7 -0.335 -0.323 0.014 1001.100 1001.100 44.300E

150.00A 29.71 -0.920 -0.988 1001.099 0.000 -4.725 994.416 -0.844 -4.301 0.000 0.000 0.000 A WTR

SPOOL 2
160.00E 31.61 29.86 0.00 695.75 -0.223 -1017.3 -0.473 -0.461 0.022 1001.100 1001.100 44.300E

160.00A 29.86 -1.068 -1.149 1001.099 0.000 -5.485 994.372 -1.011 -5.157 0.000 0.000 0.000 A WTR

SPOOL 2
170.00E 31.61 30.29 0.00 695.75 -0.230 -1061.6 -0.492 -0.465 0.007 1001.100 1001.100 44.300E

170.00A 30.29 -1.098 -1.181 1001.099 0.000 -5.637 994.236 -1.033 -5.268 0.000 0.000 0.000 A WTR

SPOOL 2
180.00E 31.75 30.29 0.00 695.75 -0.280 -1293.7 -0.607 -0.560 0.016 1001.100 1001.100 44.300E

180.00A 30.29 -1.187 -1.278 1001.099 0.000 -6.093 994.236 -1.141 -5.815 0.000 0.000 0.000 A WTR

SPOOL 2
190.00E 31.75 30.29 0.00 695.75 -0.307 -1535.5 -0.721 -0.660 0.020 1001.100 1001.100 44.300E

190.00A 30.29 -1.276 -1.375 1001.099 0.000 -6.549 994.236 -1.243 -6.336 0.000 0.000 0.000 A WTR

SPOOL 2
200.00E 31.75 30.44 0.00 695.75 -0.318 -1529.3 -0.698 -0.665 0.009 1001.100 1001.100 44.300E

200.00A 30.44 -1.276 -1.375 1001.099 0.000 -6.549 994.191 -1.240 -6.323 0.000 0.000 0.000 A WTR

SPOOL 2
210.00E 31.90 30.44 0.00 695.75 -0.318 -1520.6 -0.687 -0.671 0.011 1001.100 1001.100 44.300E

210.00A 30.44 -1.276 -1.375 1001.099 0.000 -6.549 994.191 -1.237 -6.305 0.000 0.000 0.000 A WTR

SPOOL 2
220.00E 31.90 30.73 0.00 695.75 -0.318 -1535.7 -0.709 -0.665 0.014 1001.100 1001.100 44.300E

220.00A	30.73	-1.276	-1.375	1001.099	0.000	-6.549	994.100	-1.243	-6.335	0.000	0.000	0.000	A WTR
SPOOL 2													
230.00E	31.90	30.73	0.00	695.75	-0.324	-1535.6	-0.711	-0.667	0.018	1001.100	1001.100	44.300E	
230.00A	30.73	-1.305	-1.408	1001.099	0.000	-6.701	994.100	-1.243	-6.335	0.000	0.000	0.000	A WTR
SPOOL 2													
240.00E	32.04	30.88	0.00	695.75	-0.311	-1529.1	-0.702	-0.671	0.018	1001.100	1001.100	44.300E	
240.00A	30.88	-1.305	-1.408	1001.099	0.000	-6.701	994.055	-1.240	-6.322	0.000	0.000	0.000	A WTR
SPOOL 2													
250.00E	32.04	30.88	0.00	695.75	-0.318	-1514.2	-0.687	-0.658	0.003	1001.100	1001.100	44.300E	
250.00A	30.88	-1.276	-1.375	1001.099	0.000	-6.549	994.055	-1.234	-6.291	0.000	0.000	0.000	A WTR
SPOOL 2													
260.00E	31.90	31.02	0.00	695.75	-0.311	-1535.7	-0.711	-0.660	0.011	1001.100	1001.100	44.300E	
260.00A	31.02	-1.276	-1.375	1001.099	0.000	-6.549	994.009	-1.243	-6.335	0.000	0.000	0.000	A WTR
SPOOL 2													
270.00E	32.04	31.17	0.00	695.75	-0.267	-1269.5	-0.580	-0.557	0.007	1001.100	1001.100	44.300E	
270.00A	31.17	-1.187	-1.278	1001.099	0.000	-6.093	993.963	-1.130	-5.760	0.000	0.000	0.000	A WTR
SPOOL 2													
280.00E	32.04	31.46	0.00	695.75	-0.237	-1112.5	-0.511	-0.490	0.007	1001.100	1001.100	44.300E	
280.00A	31.46	-1.128	-1.214	1001.099	0.000	-5.789	993.871	-1.058	-5.392	0.000	0.000	0.000	A WTR
SPOOL 2													
290.00E	31.90	31.46	0.00	695.75	-0.223	-1037.2	-0.482	-0.465	0.018	1001.100	1001.100	44.300E	
290.00A	31.46	-1.068	-1.149	1001.099	0.000	-5.485	993.871	-1.022	-5.206	0.000	0.000	0.000	A WTR
SPOOL 2													
300.00E	32.19	31.46	0.00	695.75	-0.209	-1021.8	-0.473	-0.449	0.007	1001.100	1001.100	44.300E	
300.00A	31.46	-1.068	-1.149	1001.099	0.000	-5.485	993.871	-1.014	-5.167	0.000	0.000	0.000	A WTR

```
SPOOL  2
  310.00E  32.19   31.46    0.00    695.75   -0.149    -767.4   -0.350   -0.357    0.013 1001.100 1001.100    44.300E

  310.00A  31.46   -0.950   -1.020  1001.099 0.000    -4.877   993.871   -0.879   -4.478      0.000      0.000      0.000 A WTR

SPOOL  2
  320.00E  32.34   31.46    0.00    695.75   -0.149    -703.3   -0.327   -0.315    0.003 1001.100 1001.100    44.300E

  320.00A  31.46   -0.920   -0.988  1001.099 0.000    -4.725   993.871   -0.841   -4.287      0.000      0.000      0.000 A WTR

SPOOL  2
  330.00E  32.34   31.46    0.00    695.75   -0.149    -714.4   -0.339   -0.315    0.005 1001.100 1001.100    44.300E

  330.00A  31.46   -0.920   -0.988  1001.099 0.000    -4.725   993.871   -0.848   -4.321      0.000      0.000      0.000 A WTR

SPOOL  2
  340.00E  32.34   31.61    0.00    695.75   -0.159    -707.7   -0.333   -0.317    0.007 1001.100 1001.100    44.300E

  340.00A  31.61   -0.920   -0.988  1001.099 0.000    -4.725   993.825   -0.844   -4.300      0.000      0.000      0.000 A WTR

SPOOL  2
  350.00E  32.63   31.61    0.00    695.75   -0.159    -705.5   -0.325   -0.323    0.007 1001.100 1001.100    44.300E

  350.00A  31.61   -0.920   -0.988  1001.099 0.000    -4.725   993.825   -0.843   -4.294      0.000      0.000      0.000 A WTR

SPOOL  2
  360.00E  32.63   31.46    0.00    695.75   -0.159    -707.8   -0.327   -0.315   -0.001 1001.100 1001.100    44.300E

  360.00A  31.46   -0.920   -0.988  1001.099 0.000    -4.725   993.871   -0.844   -4.301      0.000      0.000      0.000 A WTR

SPOOL  2
  370.00E  32.63   31.46    0.00    695.75   -0.159    -712.2   -0.329   -0.323    0.005 1001.100 1001.100    44.300E

  370.00A  31.46   -0.950   -1.020  1001.099 0.000    -4.877   993.871   -0.847   -4.314      0.000      0.000      0.000 A WTR

SPOOL  2
  380.00E  32.63   31.75    0.00    695.75   -0.155    -714.4   -0.333   -0.323    0.007 1001.100 1001.100    44.300E

  380.00A  31.75   -0.920   -0.988  1001.099 0.000    -4.725   993.778   -0.848   -4.320      0.000      0.000      0.000 A WTR
```

SPOOL 2													
390.00E	32.63	31.75	0.00	695.75	-0.041	-227.7	-0.094	-0.078	0.001	1001.100	1001.100	44.300E	
390.00A	31.75	-0.506	-0.536	1001.099	0.000	-2.597	993.778	-0.479	-2.439	0.000	0.000	0.000	A WTR
SPOOL 2													
400.00E	32.63	31.61	0.00	695.75	-0.027	-102.5	-0.047	-0.032	-0.005	1001.100	1001.100	44.300E	
400.00A	31.61	-0.357	-0.374	1001.099	0.000	-1.832	993.825	-0.321	-1.637	0.000	0.000	0.000	A WTR
SPOOL 2													
410.00E	32.63	31.46	0.00	695.75	-0.024	-108.6	-0.047	-0.036	-0.005	1001.100	1001.100	44.300E	
410.00A	31.46	-0.357	-0.374	1001.099	0.000	-1.832	993.871	-0.331	-1.685	0.000	0.000	0.000	A WTR
SPOOL 2													
420.00E	32.48	31.46	0.00	695.75	-0.030	-111.6	-0.049	-0.036	-0.005	1001.100	1001.100	44.300E	
420.00A	31.46	-0.357	-0.374	1001.099	0.000	-1.832	993.871	-0.335	-1.708	0.000	0.000	0.000	A WTR
SPOOL 2													
430.00E	32.63	31.61	0.00	695.75	-0.027	-102.5	-0.048	-0.036	-0.005	1001.100	1001.100	44.300E	
430.00A	31.61	-0.357	-0.374	1001.099	0.000	-1.832	993.825	-0.321	-1.637	0.000	0.000	0.000	A WTR
SPOOL 2													
440.00E	32.63	31.46	0.00	695.75	-0.024	-105.6	-0.048	-0.038	-0.005	1001.100	1001.100	44.300E	
440.00A	31.46	-0.357	-0.374	1001.099	0.000	-1.832	993.871	-0.326	-1.661	0.000	0.000	0.000	A WTR
SPOOL 2													
450.00E	32.63	31.46	0.00	695.75	-0.027	-111.6	-0.049	-0.036	-0.005	1001.100	1001.100	44.300E	
450.00A	31.46	-0.357	-0.374	1001.099	0.000	-1.832	993.871	-0.335	-1.708	0.000	0.000	0.000	A WTR
SPOOL 2													
460.00E	32.63	31.46	0.00	695.75	-0.024	-105.6	-0.045	-0.036	-0.005	1001.100	1001.100	44.300E	
460.00A	31.46	-0.357	-0.374	1001.099	0.000	-1.832	993.871	-0.326	-1.661	0.000	0.000	0.000	A WTR
SPOOL 2													

470.00E	32.63	31.46	0.00	695.75	-0.024	-108.6	-0.043	-0.038	-0.005	1001.100	1001.100	44.300E	
470.00A	31.46	-0.357	-0.374	1001.099	0.000	-1.832	993.871	-0.331	-1.685	0.000	0.000	0.000	A WTR
SPOOL 2													
480.00E	32.48	31.46	0.00	695.75	-0.014	-13.1	-0.007	-0.009	-0.005	1001.100	1001.100	44.300E	
480.00A	31.46	-0.118	-0.116	1001.099	0.000	-0.605	993.871	-0.113	-0.585	0.000	0.000	0.000	A WTR
SPOOL 2													
490.00E	32.63	31.61	0.00	695.75	-0.010	-17.8	-0.014	-0.009	-0.005	1001.100	1001.100	44.300E	
490.00A	31.61	-0.118	-0.116	1001.099	0.000	-0.605	993.825	-0.134	-0.683	0.000	0.000	0.000	A WTR

ENGINEERING UNITS CONVERSION RESULTS

DATE 04-JUL-79 RUN NO. 14

TIME (SEC)	TW	TF (DEG. CELSIUS)	TS	PA (KPA)	PD (KPA)	DTT (KG/M*SEC**2)	DF1	DF2 (KG-M/SEC**2)	DF3	GD1	GD2	GD3 (KG/M3)	FLAGS
SPOOL 2													
0.00E	33.21	32.19	0.00	695.75	-0.024	-108.6	-0.045	-0.038	-0.005	1001.100	1001.100	44.300E	

ANALYSIS OF DATA

TIME (SEC)	FLUID TEMP (CEL)	--TURB VELOCITY-- FTW (M/SEC)	FTA (M/SEC)	RHOF (KG/M**3)	VOID	MAFT (KG/SEC)	WATER DENS (KG/M**3)	WATER VEL (M/SEC)	WATER MAFW (KG/SEC)	STEAM DENS (KG/M**3)	STEAM VEL (M/SEC)	STEAM MAFW (KG/SEC)	
0.00A	32.19	-0.357	-0.374	1001.099	0.000	-1.832	993.639	-0.331	-1.684	0.045	0.000	0.000	A WTR
SPOOL 2													
10.00E	33.21	32.04	0.00	695.75	-0.024	-114.7	-0.049	-0.038	-0.005	1001.100	1001.100	44.300E	
10.00A	32.04	-0.357	-0.374	1001.099	0.000	-1.832	993.685	-0.340	-1.731	0.045	0.000	0.000	A WTR
SPOOL 2													
20.00E	33.50	32.34	0.00	695.75	-0.027	-111.6	-0.049	-0.036	-0.005	1001.100	1001.100	44.300E	
20.00A	32.34	-0.357	-0.374	1001.099	0.000	-1.832	993.592	-0.335	-1.708	0.045	0.000	0.000	A WTR
SPOOL 2													
30.00E	33.65	32.34	0.00	695.75	-0.020	-105.6	-0.045	-0.036	-0.005	1001.100	1001.100	44.300E	
30.00A	32.34	-0.357	-0.374	1001.099	0.000	-1.832	993.592	-0.326	-1.661	0.045	0.000	0.000	A WTR
SPOOL 2													
40.00E	33.79	32.48	0.00	695.75	-0.020	-108.6	-0.045	-0.038	-0.005	1001.100	1001.100	44.300E	
40.00A	32.48	-0.327	-0.342	1001.099	0.000	-1.678	993.545	-0.331	-1.684	0.045	0.000	0.000	A WTR
SPOOL 2													
50.00E	33.94	32.63	0.00	695.75	-0.020	-99.5	-0.041	-0.036	-0.005	1001.100	1001.100	44.300E	
50.00A	32.63	-0.327	-0.342	1001.099	0.000	-1.678	993.498	-0.316	-1.612	0.045	0.000	0.000	A WTR

ENGINEERING UNITS CONVERSION RESULTS

DATE 04-JUL-79 RUN NO. 14

TIME (SEC)	TW	TF (DEG. CELSIUS)	TS	PA (KPA)	PD (KPA)	DTT (KG/M*SEC**2)	DF1	DF2 (KG-M/SEC**2)	DF3	GD1	GD2	GD3 (KG/M3)	FLAGS
SPOOL 2													
90.00E	34.38	33.21	0.00	695.75	-0.149	-689.1	-0.318	-0.311	0.003	1001.100	1001.100	44.300E	

ANALYSIS OF DATA

TIME (SEC)	FLUID TEMP (CEL)	--TURB VELOCITY-- FTW (M/SEC)	FTA (M/SEC)	RHOF (KG/M**3)	VOID	MAFT (KG/SEC)	WATER DENS (KG/M**3)	WATER VEL (M/SEC)	WATER MAFW (KG/SEC)	STEAM DENS (KG/M**3)	STEAM VEL (M/SEC)	STEAM MAFW (KG/SEC)	
90.00A	33.21	-0.920	-0.988	1001.099	0.000	-4.725	993.309	-0.833	-4.242	0.000	0.000	0.000	A WTR
SPOOL 2													
100.00E	34.09	33.50	0.00	695.75	-0.149	-689.1	-0.322	-0.308	0.003	1001.100	1001.100	44.300E	
100.00A	33.50	-0.920	-0.988	1001.099	0.000	-4.725	993.213	-0.833	-4.242	0.000	0.000	0.000	A WTR
SPOOL 2													
110.00E	34.09	33.36	0.00	695.75	-0.159	-687.1	-0.320	-0.308	0.003	1001.100	1001.100	44.300E	
110.00A	33.36	-0.920	-0.988	1001.099	0.000	-4.725	993.261	-0.832	-4.236	0.000	0.000	0.000	A WTR
SPOOL 2													
120.00E	34.09	33.50	0.00	695.75	-0.149	-701.2	-0.325	-0.308	-0.005	1001.100	1001.100	44.300E	
120.00A	33.50	-0.920	-0.988	1001.099	0.000	-4.725	993.213	-0.840	-4.279	0.000	0.000	0.000	A WTR
SPOOL 2													
130.00E	34.09	33.79	0.00	695.75	-0.159	-703.3	-0.331	-0.313	0.005	1001.100	1001.100	44.300E	
130.00A	33.79	-0.920	-0.988	1001.099	0.000	-4.725	993.117	-0.842	-4.285	0.000	0.000	0.000	A WTR
SPOOL 2													
140.00E	34.09	33.79	0.00	695.75	-0.149	-693.0	-0.320	-0.308	-0.003	1001.100	1001.100	44.300E	
140.00A	33.79	-0.920	-0.988	1001.099	0.000	-4.725	993.117	-0.835	-4.254	0.000	0.000	0.000	A WTR

ENGINEERING UNITS CONVERSION RESULTS

DATE 04-JUL-79 RUN NO. 14

TIME (SEC)	TW	TF (DEG. CELSIUS)	TS	PA (KPA)	PD (KPA)	DTT (KG/M*SEC**2)	DF1	DF2 (KG-M/SEC**2)	DF3	GD1	GD2	GD3 (KG/M3)	FLAGS
SPOOL 2													
220.00E	34.38	34.09	0.00	695.75	-0.318	-1512.0	-0.683	-0.660	0.003	1001.100	1001.100	44.300E	

ANALYSIS OF DATA

TIME (SEC)	FLUID TEMP (CEL)	--TURB VELOCITY-- FTW (M/SEC)	FTA (M/SEC)	RHOF (KG/M**3)	VOID	MAFT (KG/SEC)	WATER DENS (KG/M**3)	WATER VEL (M/SEC)	WATER MAFW (KG/SEC)	STEAM DENS (KG/M**3)	STEAM VEL (M/SEC)	STEAM MAFW (KG/SEC)	
220.00A	34.09	-1.305	-1.408	1001.099	0.000	-6.701	993.021	-1.234	-6.283	0.000	0.000	0.000	A WTR
SPOOL 2													
230.00E	34.38	34.09	0.00	695.75	-0.311	-1501.1	-0.668	-0.667	0.005	1001.100	1001.100	44.300E	
230.00A	34.09	-1.305	-1.408	1001.099	0.000	-6.701	993.021	-1.230	-6.260	0.000	0.000	0.000	A WTR
SPOOL 2													
240.00E	34.38	34.38	0.00	695.75	-0.318	-1475.1	-0.655	-0.650	-0.003	1001.100	1001.100	44.300E	
240.00A	34.38	-1.305	-1.408	1001.099	0.000	-6.701	992.924	-1.219	-6.205	0.000	0.000	0.000	A WTR
SPOOL 2													
250.00E	34.38	34.23	0.00	695.75	-0.318	-1525.2	-0.691	-0.656	-0.005	1001.100	1001.100	44.300E	
250.00A	34.22	-1.305	-1.408	1001.099	0.000	-6.701	992.973	-1.239	-6.310	0.000	0.000	0.000	A WTR
SPOOL 2													
260.00E	34.52	34.38	0.00	695.75	-0.311	-1505.4	-0.687	-0.654	0.007	1001.100	1001.100	44.300E	
260.00A	34.38	-1.305	-1.408	1001.099	0.000	-6.701	992.924	-1.231	-6.269	0.000	0.000	0.000	A WTR
SPOOL 2													
270.00E	34.52	34.38	0.00	695.75	-0.311	-1485.7	-0.679	-0.645	0.007	1001.100	1001.100	44.300E	
270.00A	34.38	-1.276	-1.375	1001.099	0.000	-6.549	992.924	-1.223	-6.228	0.000	0.000	0.000	A WTR

ENGINEERING UNITS CONVERSION RESULTS

DATE 04-JUL-79 RUN NO. 14

TIME (SEC)	TW	TF (DEG. CELSIUS)	TS	PA (KPA)	PD (KPA)	DTT (KG/M*SEC**2)	DF1	DF2 (KG-M/SEC**2)	DF3	GD1	GD2	GD3 (KG/M3)	FLAGS
SPOOL 2													
350.00E	34.96	34.6[illegible]	0.00	695.75	-0.155	-691.0	-0.318	-0.313	0.003	1001.100	1001.100	44.300E	

ANALYSIS OF DATA

TIME (SEC)	FLUID TEMP (CEL)	--TURB VELOCITY-- FTW (M/SEC)	FTA (M/SEC)	RHOF (KG/M**3)	VOID	MAFT (KG/SEC)	WATER DENS (KG/M**3)	WATER VEL (M/SEC)	WATER MAFW (KG/SEC)	STEAM DENS (KG/M**3)	STEAM VEL (M/SEC)	STEAM MAFW (KG/SEC)	
350.00A	34.67	-0.920	-0.988	1001.099	0.000	-4.725	992.827	-0.834	-4.247	0.000	0.000	0.000	A WTR
SPOOL 2													
360.00E	34.96	34.67	0.00	695.75	-0.152	-703.4	-0.327	-0.313	0.001	1001.100	1001.100	44.300E	
360.00A	34.67	-0.920	-0.988	1001.099	0.000	-4.725	992.827	-0.842	-4.285	0.000	0.000	0.000	A WTR
SPOOL 2													
370.00E	34.96	34.67	0.00	695.75	-0.149	-691.0	-0.316	-0.309	-0.003	1001.100	1001.100	44.300E	
370.00A	34.67	-0.920	-0.988	1001.099	0.000	-4.725	992.827	-0.834	-4.247	0.000	0.000	0.000	A WTR
SPOOL 2													
380.00E	34.96	34.82	0.00	695.75	-0.155	-705.6	-0.331	-0.311	0.001	1001.100	1001.100	44.300E	
380.00A	34.82	-0.920	-0.988	1001.099	0.000	-4.725	992.778	-0.843	-4.292	0.000	0.000	0.000	A WTR
SPOOL 2													
390.00E	35.11	34.82	0.00	695.75	-0.155	-705.5	-0.335	-0.315	0.009	1001.100	1001.100	44.300E	
390.00A	34.82	-0.920	-0.988	1001.099	0.000	-4.725	992.778	-0.843	-4.291	0.000	0.000	0.000	A WTR
SPOOL 2													
400.00E	35.11	34.96	0.00	695.75	-0.149	-691.0	-0.310	-0.306	-0.012	1001.100	1001.100	44.300E	
400.00A	34.96	-0.920	-0.988	1001.099	0.000	-4.725	992.729	-0.834	-4.247	0.000	0.000	0.000	A WTR

ENGINEERING UNITS CONVERSION RESULTS

DATE 04-JUL-79 RUN NO. 14

TIME (SEC)	TW	TF (DEG. CELSIUS)	TS	PA (KPA)	PD (KPA)	DTT (KG/M*SEC**2)	DF1	DF2 (KG-M/SEC**2)	DF3	GD1	GD2	GD3 (KG/M3)	FLAGS
SPOOL 2													
420.00E	35.11	34.96	0.00	695.75	-0.020	-123.8	-0.052	-0.040	-0.005	1001.100	1001.100	44.300F	

ANALYSIS OF DATA

TIME (SEC)	FLUID TEMP (CEL)	--TURB VELOCITY-- FTW (M/SEC)	FTA (M/SEC)	RHOF (KG/M**3)	VOID	MAFT (KG/SEC)	WATER DENS (KG/M**3)	WATER VEL (M/SEC)	WATER MAFW (KG/SEC)	STEAM DENS (KG/M**3)	STEAM VEL (M/SEC)	STEAM MAFW (KG/SEC)	
420.00A	34.96	-0.327	-0.342	1001.099	0.000	-1.678	992.729	-0.353	-1.797	0.000	0.000	0.000	A WTR
SPOOL 2													
430.00E	35.11	34.96	0.00	695.75	-0.020	-99.5	-0.041	-0.038	-0.003	1001.100	1001.100	44.300E	
430.00A	34.96	-0.387	-0.407	1001.099	0.000	-1.985	992.729	-0.317	-1.611	0.000	0.000	0.000	A WTR
SPOOL 2													
440.00E	35.11	34.96	0.00	695.75	-0.020	-114.7	-0.049	-0.038	-0.005	1001.100	1001.100	44.300F	
440.00A	34.96	-0.357	-0.374	1001.099	0.000	-1.832	992.729	-0.340	-1.730	0.000	0.000	0.000	A WTR
SPOOL 2													
450.00E	35.11	34.96	0.00	695.75	-0.024	-99.5	-0.041	-0.036	-0.005	1001.100	1001.100	44.300E	
450.00A	34.96	-0.357	-0.374	1001.099	0.000	-1.832	992.729	-0.317	-1.612	0.000	0.000	0.000	A WTR
SPOOL 2													
460.00E	35.11	34.67	0.00	695.75	-0.024	-108.6	-0.049	-0.036	-0.003	1001.100	1001.100	44.300F	
460.00A	34.67	-0.357	-0.374	1001.099	0.000	-1.832	992.827	-0.331	-1.683	0.000	0.000	0.000	A WTR
SPOOL 2													
470.00E	34.96	34.96	0.00	695.75	-0.014	-108.6	-0.047	-0.038	-0.003	1001.100	1001.100	44.300F	
470.00A	34.96	-0.357	-0.374	1001.099	0.000	-1.832	992.729	-0.331	-1.683	0.000	0.000	0.000	A WTR

ENGINEERING UNITS CONVERSION RESULTS

DATE 04-JUL-79 RUN NO. 15

TIME (SEC)	TW	TF (DEG. CELSIUS)	TS	PA (KPA)	PD (KPA)	DTT (KG/M*SEC**2)	DF1	DF2 (KG-M/SEC**2)	DF3	GD1	GD2	GD3 (KG/M3)	FLAGS
SPOOL 3													
0.00E	27.96	32.63	0.00	695.73	0.044	320.5	0.286	0.307	0.014	793.776	739.553	44.300E	GH

ANALYSIS OF DATA

TIME (SEC)	FLUID TEMP (CEL)	--TURB VELOCITY-- FTW (M/SEC)	FTA (M/SEC)	RHOF (KG/M**3)	VOID	MAFT (KG/SEC)	WATER DENS (KG/M**3)	WATER VEL (M/SEC)	WATER MAFW (KG/SEC)	STEAM DENS (KG/M**3)	STEAM VEL (M/SEC)	STEAM MAFW (KG/SEC)	
0.00A	32.63	0.619	0.609	763.826	0.000	4.740	993.498	0.568	5.659	0.000	0.000	0.000	A WTR
SPOOL 3													
10.00E	28.84	32.92	0.00	695.73	0.044	324.8	0.290	0.323	0.003	793.776	739.219	44.300E	GH
10.00A	32.92	0.648	0.637	759.775	0.000	4.937	993.404	0.572	5.697	0.000	0.000	0.000	A WTR
SPOOL 3													
20.00E	29.27	33.21	0.00	695.73	0.044	324.8	0.290	0.323	0.003	793.776	739.553	44.300E	GH
20.00A	33.21	0.619	0.609	763.826	0.000	4.740	993.309	0.572	5.696	0.000	0.000	0.000	A WTR
SPOOL 3													
30.00E	29.71	33.36	0.00	695.73	0.036	326.9	0.309	0.311	-0.001	793.776	739.553	44.300E	GH
30.00A	33.36	0.648	0.637	763.826	0.000	4.963	993.261	0.574	5.715	0.000	0.000	0.000	A WTR
SPOOL 3													
40.00E	30.29	33.21	0.00	695.73	0.040	330.9	0.305	0.323	-0.001	793.776	739.553	44.300E	GH
40.00A	33.21	0.619	0.609	763.826	0.000	4.740	993.309	0.577	5.750	0.000	0.000	0.000	A WTR
SPOOL 3													
50.00E	30.29	33.21	0.00	695.73	0.044	326.9	0.290	0.330	-0.001	793.776	739.553	44.300E	GH
50.00A	33.21	0.648	0.637	763.826	0.000	4.963	993.309	0.574	5.715	0.000	0.000	0.000	A WTR

SPOOL 3														
60.00E	30.44	33.21	0.00	695.73	0.044	320.5	0.290	0.304	0.014	785.622	739.553	44.300E	GH	
60.00A	33.21	0.619	0.609	760.176	0.000	4.717	993.309	0.568	5.659	0.000	0.000	0.000	A	WTR
SPOOL 3														
70.00E	30.59	33.50	0.00	695.73	0.044	328.5	0.290	0.319	0.014	785.622	739.553	44.300E	GH	
70.00A	33.50	0.648	0.637	760.176	0.000	4.940	993.213	0.575	5.729	0.000	0.000	0.000	A	WTR
SPOOL 3														
80.00E	30.73	33.79	0.00	695.73	0.033	322.5	0.286	0.311	0.014	793.776	739.553	44.300E	GH	
80.00A	33.79	0.648	0.637	763.826	0.000	4.963	993.117	0.570	5.676	0.000	0.000	0.000	A	WTR
SPOOL 3														
90.00E	31.02	33.79	0.00	695.73	0.044	320.9	0.290	0.319	-0.001	793.776	739.553	44.300E	GH	
90.00A	33.79	0.648	0.637	763.826	0.000	4.963	993.117	0.568	5.661	0.000	0.000	0.000	A	WTR
SPOOL 3														
100.00E	31.17	33.79	0.00	695.73	0.036	322.8	0.290	0.319	0.003	793.776	739.553	44.300E	GH	
100.00A	33.79	0.648	0.637	763.826	0.000	4.963	993.117	0.570	5.678	0.000	0.000	0.000	A	WTR
SPOOL 3														
110.00E	31.32	33.79	0.00	695.73	0.018	242.6	0.217	0.243	-0.001	793.776	739.553	44.300E	GH	
110.00A	33.79	0.590	0.580	763.826	0.000	4.516	993.117	0.494	4.923	0.000	0.000	0.000	A	WTR
SPOOL 3														
120.00E	31.46	33.79	0.00	695.73	0.015	208.5	0.183	0.209	0.003	793.776	739.553	44.300E	GH	
120.00A	33.79	0.531	0.524	763.826	0.000	4.070	993.117	0.458	4.563	0.000	0.000	0.000	A	WTR
SPOOL 3														
130.00E	31.46	33.94	0.00	695.73	0.000	108.2	0.092	0.114	-0.001	785.622	739.553	44.300E	GH	
130.00A	33.94	0.385	0.383	760.176	0.000	2.938	993.069	0.330	3.287	0.000	0.000	0.000	A	WTR
SPOOL 3														

140.00E	31.46	34.09	0.00	695.73	0.007	139.1	0.122	0.142	-0.001	793.776	739.553	44.300E	GH
140.00A	34.09	0.415	0.411	763.826	0.000	3.176	993.021	0.374	3.728	0.000	0.000	0.000	A WTR
SPOOL 3													
150.00E	31.46	34.09	0.00	695.73	-0.014	141.0	0.122	0.146	-0.001	793.776	739.553	44.300E	GH
150.00A	34.09	0.415	0.411	763.826	0.000	3.176	993.021	0.377	3.753	0.000	0.000	0.000	A WTR
SPOOL 3													
160.00E	31.61	34.23	0.00	695.73	0.000	141.0	0.122	0.146	-0.001	785.622	739.553	44.300E	GH
160.00A	34.23	0.444	0.440	760.176	0.000	3.383	992.973	0.377	3.753	0.000	0.000	0.000	A WTR
SPOOL 3													
170.00E	31.75	34.09	0.00	695.73	0.000	139.1	0.122	0.142	-0.001	785.622	739.553	44.300E	GH
170.00A	34.09	0.415	0.411	760.176	0.000	3.161	993.021	0.374	3.728	0.000	0.000	0.000	A WTR
SPOOL 3													
180.00E	31.75	34.23	0.00	695.73	0.000	137.3	0.122	0.139	-0.001	785.622	739.553	44.300E	GH
180.00A	34.23	0.415	0.411	760.176	0.000	3.161	992.973	0.372	3.703	0.000	0.000	0.000	A WTR
SPOOL 3													
190.00E	31.90	34.23	0.00	695.73	0.000	141.0	0.122	0.146	-0.001	785.622	739.553	44.300E	GH
190.00A	34.23	0.415	0.411	760.176	0.000	3.161	992.973	0.377	3.753	0.000	0.000	0.000	A WTR
SPOOL 3													
200.00E	32.04	34.38	0.00	695.73	0.015	137.3	0.122	0.139	-0.001	793.776	739.553	44.300E	GH
200.00A	34.38	0.415	0.411	763.826	0.000	3.176	992.924	0.372	3.702	0.000	0.000	0.000	A WTR
SPOOL 3													
210.00E	32.04	34.38	0.00	695.73	0.015	23.1	0.009	0.035	-0.001	785.622	739.553	44.300E	GH
210.00A	34.38	0.239	0.243	760.176	0.000	1.821	992.924	0.153	1.519	0.000	0.000	0.000	A WTR
SPOOL 3													
220.00E	32.04	34.38	0.00	695.73	0.044	216.6	0.194	0.217	-0.001	793.776	739.553	44.300E	GH

220.00A	34.38	0.531	0.524	763.826	0.000	4.070	992.924	0.467	4.651	0.000	0.000	0.000	A	WTR
SPOOL 3														
230.00E	32.34	34.52	0.00	695.73	0.015	244.5	0.217	0.239	0.007	793.776	739.553	44.300E		GH
230.00A	34.52	0.590	0.580	763.826	0.000	4.516	992.876	0.496	4.941	0.000	0.000	0.000	A	WTR
SPOOL 3														
240.00E	32.63	34.38	0.00	695.73	0.011	272.7	0.248	0.270	-0.001	793.776	739.553	44.300E		GH
240.00A	34.38	0.590	0.580	763.826	0.000	4.516	992.924	0.524	5.219	0.000	0.000	0.000	A	WTR
SPOOL 3														
250.00E	32.63	34.38	0.00	695.73	0.044	340.6	0.305	0.326	0.014	793.776	739.553	44.300E		GH
250.00A	34.38	0.648	0.637	63.826	0.000	4.963	992.924	0.586	5.832	0.000	0.000	0.000	A	WTR
SPOOL 3														
260.00E	32.63	34.38	0.00	695.73	0.044	397.1	0.373	0.375	0.003	793.776	739.553	44.300E		GH
260.00A	34.38	0.706	0.693	763.826	0.000	5.410	992.924	0.632	6.297	0.000	0.000	0.000	A	WTR
SPOOL 3														
270.00E	32.48	34.38	0.00	695.73	0.051	370.7	0.335	0.353	0.014	793.776	739.553	44.300E		GH
270.00A	34.38	0.648	0.637	763.826	0.000	4.963	992.924	0.611	6.084	0.000	0.000	0.000	A	WTR
SPOOL 3														
280.00E	32.63	34.38	0.00	695.73	0.044	330.9	0.305	0.323	-0.001	785.622	739.553	44.300E		GH
280.00A	34.38	0.648	0.637	760.176	0.000	4.940	992.924	0.577	5.749	0.000	0.000	0.000	A	WTR
SPOOL 3														
290.00E	32.63	34.38	0.00	695.73	0.036	326.9	0.297	0.323	-0.001	793.776	739.553	44.300E		GH
290.00A	34.38	0.648	0.637	763.826	0.000	4.963	992.924	0.574	5.714	0.000	0.000	0.000	A	WTR
SPOOL 3														
300.00E	32.63	34.38	0.00	695.73	0.015	324.9	0.305	0.311	-0.001	793.776	739.553	44.300E		GH
300.00A	34.38	0.619	0.609	763.826	0.000	4.740	992.924	0.572	5.697	0.000	0.000	0.000	A	WTR

SPOOL 3														
310.00E	32.77	34.52	0.00	695.73	0.044	328.8	0.290	0.330	0.003	793.776	739.553	44.300E	GH	
310.00A	34.52	0.648	0.637	763.826	0.000	4.963	992.876	0.575	5.730	0.000	0.000	0.000	A	WTR
SPOOL 3														
320.00E	32.63	34.52	0.00	695.73	0.044	324.9	0.297	0.319	-0.001	793.776	739.553	44.300E	GH	
320.00A	34.52	0.619	0.609	763.826	0.000	4.740	992.876	0.572	5.696	0.000	0.000	0.000	A	WTR
SPOOL 3														
330.00E	32.77	34.52	0.00	695.73	0.044	324.9	0.293	0.323	-0.001	793.776	739.553	44.300E	GH	
330.00A	34.52	0.648	0.637	763.826	0.000	4.963	992.876	0.572	5.696	0.000	0.000	0.000	A	WTR
SPOOL 3														
340.00E	32.92	34.52	0.00	695.73	0.036	316.8	0.293	0.323	-0.016	793.776	739.553	44.300E	GH	
340.00A	34.52	0.619	0.609	763.826	0.000	4.740	992.876	0.565	5.625	0.000	0.000	0.000	A	WTR
SPOOL 3														
350.00E	32.92	34.67	0.00	695.73	0.051	318.9	0.293	0.311	-0.001	793.776	739.553	44.300E	GH	
350.00A	34.67	0.619	0.609	763.826	0.000	4.740	992.827	0.567	5.643	0.000	0.000	0.000	A	WTR
SPOOL 3														
360.00E	33.07	34.67	0.00	695.73	0.051	330.8	0.305	0.315	0.007	793.776	739.553	44.300E	GH	
360.00A	34.67	0.619	0.609	763.826	0.000	4.740	992.827	0.577	5.747	0.000	0.000	0.000	A	WTR
SPOOL 3														
370.00E	33.07	34.67	0.00	695.73	0.015	234.6	0.213	0.232	-0.001	793.776	747.228	44.300E	GH	
370.00A	34.67	0.590	0.580	768.066	0.000	4.542	992.827	0.486	4.841	0.000	0.000	0.000	A	WTR
SPOOL 3														
380.00E	32.92	34.96	0.00	695.73	0.015	212.6	0.194	0.209	-0.001	793.776	739.553	44.300E	GH	
380.00A	34.96	0.531	0.524	763.826	0.000	4.070	992.729	0.463	4.607	0.000	0.000	0.000	A	WTR

SPOOL 3														
390.00E	33.07	34.96	0.00	695.73	0.011	210.5	0.187	0.217	-0.005	793.776	739.553	44.300E	GH	
390.00A	34.96	0.590	0.580	763.826	0.000	4.516	992.729	0.461	4.585	0.000	0.000	0.000	A	WTR
SPOOL 3														
400.00E	33.07	34.82	0.00	695.73	0.029	210.5	0.198	0.213	-0.012	793.776	739.553	44.300E	GH	
400.00A	34.82	0.560	0.552	763.826	0.000	4.293	992.778	0.461	4.585	0.000	0.000	0.000	A	WTR
SPOOL 3														
410.00E	33.21	34.96	0.00	695.73	0.080	399.1	0.366	0.391	-0.001	793.776	739.553	44.300E	GH	
410.00A	34.96	0.706	0.693	763.826	0.000	5.410	992.729	0.634	6.313	0.000	0.000	0.000	A	WTR
SPOOL 3														
420.00E	33.36	34.96	0.00	695.73	0.134	774.3	0.709	0.747	0.010	785.622	739.553	44.300E	GH	
420.00A	34.96	0.910	0.890	760.176	0.000	6.941	992.729	0.883	8.793	0.000	0.000	0.000	A	WTR
SPOOL 3														
430.00E	33.36	34.96	0.00	695.73	0.134	768.3	0.713	0.731	0.010	785.622	739.553	44.300E	GH	
430.00A	34.96	0.910	0.890	760.176	0.000	6.941	992.729	0.880	8.759	0.000	0.000	0.000	A	WTR
SPOOL 3														
440.00E	33.50	34.96	0.00	695.73	0.131	766.6	0.721	0.731	-0.001	793.776	732.219	44.300E	GH	
440.00A	34.96	0.910	0.890	759.775	0.000	6.938	992.729	0.879	8.749	0.000	0.000	0.000	A	WTR
SPOOL 3														
450.00E	33.50	34.96	0.00	695.73	0.142	760.5	0.702	0.739	-0.001	793.776	739.553	44.300E	GH	
450.00A	34.96	0.910	0.890	763.826	0.000	6.975	992.729	0.875	8.714	0.000	0.000	0.000	A	WTR
SPOOL 3														
460.00E	33.79	34.96	0.00	695.73	0.131	774.7	0.732	0.754	-0.020	793.776	739.553	44.300E	GH	
460.00A	34.96	0.940	0.918	763.826	0.000	7.198	992.729	0.883	8.795	0.000	0.000	0.000	A	WTR
SPOOL 3														

470.00E	33.50	34.82	0.00	695.73	0.131	750.5	0.702	0.731	-0.001	793.776	739.553	44.300E	GH	
470.00A	34.82	0.910	0.890	763.826	0.000	6.975	992.778	0.873	8.691	0.000	0.000	0.000	A	WTR
SPOOL 3														
480.00E	33.50	34.96	0.00	695.73	0.131	750.4	0.686	0.735	-0.001	793.776	747.228	44.300E	GH	
480.00A	34.96	0.910	0.890	768.066	0.000	7.013	992.729	0.869	8.656	0.000	0.000	0.000	A	WTR
SPOOL 3														
490.00E	33.36	34.67	0.00	90.35	-0.145	-7.0	-0.028	0.003	-0.016	793.776	739.553	44.300E	GH	
490.00A	34.67	0.063	0.074	763.826	0.000	0.483	992.827	-0.084	-0.834	0.000	0.000	0.000	A	WTR
SPOOL 3														
500.00E	5.37	5.66	0.00	10.02	0.000	-4.9	-0.013	-0.015	-0.001	685.273	649.379	44.300E	GH	
500.00A	5.66	1.202	1.172	538.640	0.462	-0.042	1000.201	-0.007	-0.038	0.071	-12.188	-0.004	A	