318/ 4-4-85 WB (2)

I-20360

DR 09334

ornl

ORNL/TM-8462

DO NOT MICROFILM COVER

OAK RIDGE NATIONAL LABORATORY

MARTIN MARIETTA

Flowsheets and Source Terms for Radioactive Waste Projections

C. W. Forsberg
W. L. Carter
A. H. Kibbey

OPERATED BY
MARTIN MARIETTA ENERGY SYSTEMS, INC.
FOR THE UNITED STATES
DEPARTMENT OF ENERGY

DISTRIBUTION OF THIS DOCUMENT IS UNLIMITED

Printed in the United States of America. Available from
National Technical Information Service
U.S. Department of Commerce
5285 Port Royal Road, Springfield, Virginia 22161
NTIS price codes—Printed Copy: A08 Microfiche A01

This report was prepared as an account of work sponsored by an agency of the United States Government Neither the United States Government nor any agency thereof, nor any of their employees, makes any warranty, express or implied, or assumes any legal liability or responsibility for the accuracy, completeness, or usefulness of any information, apparatus, product, or process disclosed, or represents that its use would not infringe privately owned rights Reference herein to any specific commercial product, process, or service by trade name, trademark, manufacturer, or otherwise, does not necessarily constitute or imply its endorsement, recommendation, or favoring by the United States Government or any agency thereof The views and opinions of authors expressed herein do not necessarily state or reflect those of the United States Government or any agency thereof

DO NOT MICROFILM
COVER

DISCLAIMER

This report was prepared as an account of work sponsored by an agency of the United States Government. Neither the United States Government nor any agency Thereof, nor any of their employees, makes any warranty, express or implied, or assumes any legal liability or responsibility for the accuracy, completeness, or usefulness of any information, apparatus, product, or process disclosed, or represents that its use would not infringe privately owned rights. Reference herein to any specific commercial product, process, or service by trade name, trademark, manufacturer, or otherwise does not necessarily constitute or imply its endorsement, recommendation, or favoring by the United States Government or any agency thereof. The views and opinions of authors expressed herein do not necessarily state or reflect those of the United States Government or any agency thereof.

DISCLAIMER

Portions of this document may be illegible in electronic image products. Images are produced from the best available original document.

ORNL/TM-8462
Dist. Category UC-70

M85009456

ORNL/TM--8462

DE85 009456

Chemical Technology Division

NUCLEAR WASTE PROGRAMS

(Activity No. AR 05 10 05 K, Project No. ONL-WI01)
(Activity No. DB 04 04 08 0, Project No. ONL-WI11)
(Activity No. AG 30 05 00 0, Project No. ONL-WI15)
(Activity No. AH 10 05 00 0, Project No. ONL-WI16)
(Activity No. AP 02 01 00 0, Project No. ONL-WI17)

FLOWSHEETS AND SOURCE TERMS FOR RADIOACTIVE WASTE PROJECTIONS

Compiler: C. W. Forsberg

Contributors: W. L. Carter
C. W. Forsberg
A. H. Kibbey

Date Published: March 1985

Prepared by the
Oak Ridge National Laboratory
Oak Ridge, Tennessee 37831
operated by
Martin Marietta Energy Systems, Inc.
for the
U.S. DEPARTMENT OF ENERGY
under Contract No. DE-AC05-84OR21400

MASTER

DISCLAIMER

This report was prepared as an account of work sponsored by an agency of the United States Government. Neither the United States Government nor any agency thereof, nor any of their employees, makes any warranty, express or implied, or assumes any legal liability or responsibility for the accuracy, completeness, or usefulness of any information, apparatus, product, or process disclosed, or represents that its use would not infringe privately owned rights. Reference herein to any specific commercial product, process, or service by trade name, trademark, manufacturer, or otherwise does not necessarily constitute or imply its endorsement, recommendation, or favoring by the United States Government or any agency thereof. The views and opinions of authors expressed herein do not necessarily state or reflect those of the United States Government or any agency thereof.

DISTRIBUTION OF THIS DOCUMENT IS UNLIMITED

CONTENTS

Page

LIST OF FIGURES vii

LIST OF TABLES ix

ABSTRACT 1

1. INTRODUCTION 1
   1.1 RELATIONSHIP OF FLOWSHEETS TO COMMERCIAL NUCLEAR POWER FUEL CYCLE 2
   1.2 ADDITIONAL INFORMATION 3
   1.3 REFERENCES 3

2. URANIUM MINING AND MILLING 5
   2.1 SUMMARY 5
   2.2 CONVENTIONAL MINES/MILLS 7
   2.3 SOLUTION MINING 7
   2.4 BY-PRODUCT RECOVERY 7
   2.5 GENERAL DISCUSSION 7
   2.6 REFERENCES 10

3. UF_6 CONVERSION 11
   3.1 SUMMARY 11
   3.2 CHARACTERISTICS OF YELLOWCAKE 11
   3.3 YELLOWCAKE CONVERSION BY THE FLUORINATION/FRACTIONATION PROCESS 18
      3.3.1 Introduction 18
      3.3.2 Conversion Process 18
      3.3.3 Wastes Generated 21
      3.3.4 Wastes Generated Per Metric Ton of Uranium . . . 26
   3.4 SOLVENT EXTRACTION-FLUORINATION PRODUCTION OF UF_6 . . . 26
      3.4.1 Introduction 26
      3.4.2 Plant Process Flowsheet 27
      3.4.3 Special Waste Problems 27
      3.4.4 Waste Generation 37
         3.4.4.1 Radwaste composition 37
         3.4.4.2 Volume of solid wastes generated 39
         3.4.4.3 Current practice 39
      3.4.5 Recommended Flowsheets 39
   3.5 REFERENCES 41

4. URANIUM ENRICHMENT 43
   4.1 SUMMARY 43
   4.2 GASEOUS DIFFUSION FACILITIES 46
      4.2.1 The Gaseous Diffusion Process 46
      4.2.2 Radioactive Waste Generation by Gaseous Diffusion 47
      4.2.3 Gaseous Diffusion Radioactive Waste Disposal . . 50

Page

4.3 GAS CENTRIFUGE FACILITIES 54
4.3.1 Gas Centrifuge Process 54
4.3.2 Waste Generation and Treatment in a Gas Centrifuge Plant 56
4.3.3 Gas Centrifuge Waste Disposal 59
4.4 REFERENCES 65

5. FRESH-FUEL FABRICATION 67
5.1 SUMMARY 67
5.2 PROCESS DESCRIPTION 69
5.2.1 Conversion 69
5.2.2 Calcination 69
5.2.3 Pellet Preparation 69
5.2.4 Fuel Rod and Fuel Assembly Fabrication 69
5.3 WASTE STREAMS 71
5.3.1 LLW Trash 71
5.3.2 Lagoon Waste 74
5.3.3 Nitrate Waste 74
5.3.4 Water Release 74
5.3.5 LLW Ash 75
5.3.6 Gaseous Discharge 75
5.4 REFERENCES 75

6. POWER REACTOR OPERATIONS 77
6.1 SUMMARY 77
6.2 PRESSURIZED-WATER REACTORS 80
6.3 BOILING-WATER REACTORS 80
6.4 REFERENCES 81

7. REPROCESSING 83
7.1 SUMMARY 83
7.2 SOURCES OF WASTE CHARACTERIZATION DATA 86
7.3 WASTE STREAM VOLUMES AND DESCRIPTIONS 87
7.3.1 Gaseous Effluent 87
7.3.2 Solidified HLW 89
7.3.3 TRU Solids 89
7.3.4 LLW Solids 90
7.3.5 Hulls/Hardware/Fuel Residue 90
7.3.6 Stored Krypton 90
7.3.7 Fixed Iodine 90
7.3.8 Fixed Carbon-14 90
7.4 LITERATURE SURVEY OF ELEMENT DISTRIBUTION IN WASTE STREAMS 91
7.4.1 Solidified HLW 91
7.4.2 Hulls/Hardware/Fuel Residue 96
7.4.3 TRU Solids 96
7.4.4 LLW Solids 96
7.4.5 Fixed Iodine 96
7.4.6 Stored Krypton 96
7.4.7 Atmospheric Release 97

Page

7.4.8 Recovered Uranium 97
7.4.9 Plutonium Product 97
7.5 REFERENCES 98

8. NON-FUEL-CYCLE LOW-LEVEL WASTES 99
8.1 SUMMARY 99
8.2 INSTITUTIONAL WASTE 102
8.3 NON-FUEL-CYCLE INDUSTRIAL WASTE 102
8.4 DOE/DEFENSE WASTE 103
8.5 REFERENCES 107

9. DECONTAMINATION AND DECOMMISSIONING OF POWER REACTORS AND ASSOCIATED FUEL CYCLE FACILITIES 109
9.1 SUMMARY 109
9.2 DECOMMISSIONING OF URANIUM CONVERSION, FUEL FABRICATION, AND REPROCESSING FACILITIES 114
9.3 DECOMMISSIONING OF URANIUM ENRICHMENT FACILITIES 114
9.3.1 Introduction 114
9.3.2 Gaseous Diffusion Decommissioning Wastes 115
9.3.3 Gas Centrifuge Decommissioning Wastes 118
9.4 POWER REACTOR DECOMMISSIONING 118
9.5 REFERENCES 131

LIST OF FIGURES

Figure		Page
2.1	Average uranium mill tailings source terms used for projections (1983–2020)	6
3.1	Flowsheet for a direct fluorination/fractionation process for conversion of yellowcake to UF_6	12
3.2	Flowsheet for a solvent extraction-fluorination UF_6 conversion facility	13
3.3	UF_6 production via direct fluorination	19
3.4	UF_6 production via direct fluorination — process flowsheet	20
3.5	Simplified flowsheet of solvent extraction-fluorination UF_6 conversion facility	28
3.6	UF_6 production via solvent extraction-fluorination — process flowsheet	29
3.7	Molten-salt incineration of ammonium nitrate waste from a UF_6 solvent extraction-fluorination facility	35
4.1	Principal waste and product streams from a gaseous diffusion uranium enrichment plant	44
4.2	Principal waste and product streams from a gas centrifuge uranium enrichment plant	45
4.3	Radioactive waste flows at a gaseous diffusion plant	48
4.4	Radioactive waste flows for a gas centrifuge uranium enrichment plant	57
5.1	Principal waste and product streams from a fresh fuel fabrication facility	68
5.2	Fuel fabrication by the conventional powder-pellet process	70
5.3	Steps in the fabrication of fuel for light-water reactors	72
6.1	Flow diagram for normal operation of a pressurized-water reactor power plant	78
6.2	Flow diagram of normal operation of a boiling-water reactor nuclear power plant	79

Figure		Page
7.1	Volumes of designed waste releases from an LWR fuel reprocessing facility	84
8.1	Industrial and institutional wastes	100
9.1	Pressurized-water reactor decommissioning wastes per 1 MWe capacity	111
9.2	Boiling-water reactor decommissioning wastes per 1 MWe capacity	112

LIST OF TABLES

Table		Page
1.1	Representative fuel cycle requirements for power reactors	3
2.1	Fractions of elements in uranium ore that report to mine/mill plant waste and product streams	6
2.2	Information used in source term development	9
3.1	Fractional distribution of elements in plant waste and product streams for a direct-fluorination UF_6 conversion plant	12
3.2	Fractional distribution of elements in plant waste and product streams for a solvent extraction-fluorination UF_6 conversion plant	13
3.3	Chemical composition of yellowcake feed to the model UF_6 conversion plant	14
3.4	Assumptions used in calculating feed to the model yellowcake-to-UF_6 conversion plant	15
3.5	Radionuclide analysis of yellowcake	17
3.6	Airborne chemical wastes from a model 10,000-t/year fluorination/fractionation UF_6 plant	22
3.7	Liquid chemical waste releases from the model 10,000-t/year fluorination/fractionation UF_6 plant	22
3.8	Airborne radwaste releases from the model 10,000-t/year fluorination/fractionation UF_6 plant	23
3.9	Liquid radwaste releases from model 10,000-t/year fluorination/fractionation UF_6 plant	24
3.10	Solid wastes generated by the model 10,000-t/year fluorination/fractionation UF_6 plant	25
3.11	Chemical composition of solvent extraction waste streams	31
3.12	Waste solids from solvent extraction/fluorination raffinate precipitation with ammonia	32
3.13	Solids from solvent extraction/fluorination raffinate precipitation with calcium hydroxide	34

Table		Page
3.14	Waste process streams for waste raffinate disposal by molten-salt incineration at a solvent extraction/ fluorination facility	36
3.15	Radionuclide balance of process streams for a solvent extraction/fluorination facility	38
3.16	Estimates of solid wastes produced by solvent extraction/fluorination plant	40
4.1	Fractional distribution of uranium and other elements in exit process streams of a gaseous diffusion uranium enrichment plant	44
4.2	Fractional distribution of uranium and other elements in exit process streams of a gas centrifuge uranium enrichment plant	45
4.3	Waste from gaseous diffusion plant maintenance facilities	49
4.4	Waste streams from uranium recovery operations at a gaseous diffusion plant	51
4.5	Holding pond material balance for Portsmouth Gaseous Diffusion Plant	51
4.6	Gaseous diffusion plant holding pond sludge composition	52
4.7	Analysis of gaseous diffusion plant holding pond effluent	53
4.8	Estimated maximum annual releases of gaseous radioactive wastes at a gaseous diffusion plant	53
4.9	Annual solid radwaste production at Portsmouth Gaseous Diffusion Plant	55
4.10	Estimated annual solid waste production by maintenance operations for a gas centrifuge uranium enrichment plant	58
4.11	Effluents from gas centrifuge enrichment plant uranium recovery facility	60
4.12	Liquid streams received by and discharged from the primary holding pond of a gas centrifuge uranium enrichment plant	61

Table		Page
4.13	Estimated annual radiochemical releases from the primary holding pond of a gas centrifuge enrichment plant . . .	62
4.14	Estimated annual radiochemical releases to the atmosphere from a gas centrifuge enrichment plant . . .	62
4.15	Solid wastes sent to burial ground from a gas centrifuge uranium enrichment plant	64
5.1	Fractionation of uranium isotopes in feed among fuel fabrication plant wastes and products	68
5.2	Items generally found in solid LLW at a fuel fabrication plant	73
6.1	Fractional distribution of elements among waste streams of a pressurized-water reactor power plant	78
6.2	Fractional distribution of elements among waste streams of a boiling-water reactor power plant	79
7.1	Mass fractions of elements in irradiated fuel that report to reprocessing plant waste and product streams .	85
7.2	Data on waste stream unpackaged volumes	88
7.3	Fractional distribution (mass fractions) of elements initially present in irradiated fuel among waste and product streams of a fuel reprocessing plant	92
8.1	Representative values for nuclide concentrations in waste at commercial burial grounds	101
8.2	Average annual volumes of LLW buried at DOE/defense sites	104
8.3	Average annual radioactivity for LLW buried at DOE/defense sites	105
8.4	Representative radionuclide composition for DOE/defense wastes	106
9.1	Wastes from decommissioning fuel cycle facilities . . .	110
9.2	Typical volumes of operating and decommissioning wastes for nuclear facilities	113
9.3	Radioactive decommissioning wastes from a gaseous diffusion plant	116

Table		Page
9.4	Radioactive wastes from decommissioning a gas centrifuge plant	119
9.5	Burial volume and radioactivity (at time of shutdown) of wastes from decommissioning a 1175-MWe PWR	121
9.6	Burial volume and radioactivity (at time of shutdown) of wastes from decommissioning a 1155-MWe BWR	124
9.7	Reference waste compositions at time of shutdown for decommissioning a PWR	128
9.8	Reference waste compositions at time of shutdown for decommissioning a BWR	129

FLOWSHEETS AND SOURCE TERMS FOR RADIOACTIVE WASTE PROJECTIONS

W. L. Carter, C. W. Forsberg, and A. H. Kibbey

ABSTRACT

Flowsheets and source terms used to generate radioactive waste projections in the Integrated Data Base (IDB) Program are given. Volumes of each waste type generated per unit product throughput have been determined for the following facilities: uranium mining, UF_6 conversion, uranium enrichment, fuel fabrication, boiling-water reactors (BWRs), pressurized-water reactors (PWRs), and fuel reprocessing. Source terms for DOE/defense wastes have been developed. Expected wastes from typical decommissioning operations for each facility type have been determined. All wastes are also characterized by isotopic composition at time of generation and by general chemical composition.

1. INTRODUCTION

The Integrated Data Base (IDB) Program at Oak Ridge National Laboratory (ORNL) produces for the U.S. Department of Energy (DOE) the official inventories and projections of radioactive waste and spent fuel for the United States. These inventories and projections include both commercial and government operations. Projections are made through the year 2020. A summary report entitled Spent Fuel and Radioactive Waste Inventories, Projections, and Characteristics[1] is produced annually.

To produce such information requires two types of engineering input: source terms and flowsheets. These inputs are described herein as part of the documentation of the IDB Program and because such information is usable by other programs and activities.

Many historical inventories are incomplete. In such cases, best estimates of the missing information are made to provide current waste inventories. Typically, the volumes of wastes are known, but the radioisotopic compositions are unknown. Source terms describing such wastes in curies per unit volume and the isotopic breakdown of a curie

by isotope have been developed for a variety of such wastes. The source terms shown herein are based on engineering calculations, limited experimental data, and/or engineering judgment. Documentation is provided on how the numbers were obtained.

For projection purposes, the amounts and characteristics of waste produced per unit throughput of product at each type of nuclear facility are required. These are provided herein for all major commercial power reactor fuel cycle operations, for several types of power reactors, for several types of hospital and industrial facilities, and for government operations. When possible, waste estimates are based on industrial experience.

Each of the following chapters discusses a different fuel cycle operation or waste type. The level of detail varies significantly. If good information was available from other referenceable sources, the chapter includes only a brief summary of the available data and appropriate references. If existing reference sources were out of date or inadequate, the chapter describes in detail how the various source terms and flowsheets were derived.

Each chapter in this report is designed to stand alone, with its own figures, tables, and references. This is a working document for IDB, hence, it is organized to allow for ease of updating. In each chapter, there is a section that summarizes the data and identifies clearly the assumptions, source terms, and flowsheets used and recommended by IDB for its inventory and projection work. In some chapters, source terms and flowsheets from various contributors and organizations are shown and compared.

1.1 RELATIONSHIP OF FLOWSHEETS TO COMMERCIAL NUCLEAR POWER FUEL CYCLE

The flowsheets herein describe the waste produced by each nuclear fuel cycle facility on the basis of a unit feed input or product output from that facility. For example, Chapter 5 on fuel fabrication gives the waste produced per metric ton of uranium feed to fuel fabrication. Wastes are not given on a per reactor or per unit of electricity basis because the amount of fuel fabrication required depends upon reactor type and utility operating procedures. When detailed waste projections

Table 1.1. Representative fuel cycle requirements for power reactors

Requirements	PWR	BWR
Reactor capacity factor	0.65	0.65
Facility lifetime (year)	40	40
Uranium mill demand (MTIHM/GWe-year)	193.14	215.98
Uranium conversion demand (MTIHM/GWe-year)	180.6	201.9
Enrichment demand (SWU/GWe-year)	145,000	149,000
Fuel enrichment (% U-235)	3.20	2.70
Tails assay (% U-235)	0.20	0.20
Uranium fabrication demand (MTIHM/GWe-year)	31.0	41.6

are made, these factors are accounted for. Table 1.1 provides representative fuel cycle requirements for PWRs and BWRs. With (1) these requirements, (2) the enclosed flowsheets, and (3) a projection of power reactors, simplified waste projections of the commercial nuclear fuel cycle can be made.

1.2 ADDITIONAL INFORMATION

Additional information on IDB inventory and projection reports, computer codes, source terms, and flowsheets may be obtained from:

J. A. Klein, IDB Program Manager
Oak Ridge National Laboratory
Oak Ridge, Tennessee 37831
Phone: (615) 574-6823
(FTS) 624-6823

1.3 REFERENCES

1. U.S. Department of Energy, Spent Fuel and Radioactive Waste Inventories, Projections, and Characteristics, DOE/RW-0006 (September 1984).

2. URANIUM MINING AND MILLING

A. H. Kibbey

2.1 SUMMARY

The residues that remain after U_3O_8 is extracted from uranium ore are large-volume, low-activity wastes. The IDB attempts to predict the annual generation rates and accumulations of these mill tailings through the year 2020. Forecasts of domestic uranium requirements in the "most likely" case (forecast in 1982)[1] are used as the basis for calculating the mining/milling source term used in the IDB projections.

In the IDB, the DOE Energy Information Administration (EIA) nuclear power projections (mid-case) together with a 2:1 ratio for PWR:BWR with initial fuel enrichments of 3.2 and 2.7%, respectively,[2] are used to determine future fuel demand [i.e., the amount of U_3O_8 (yellowcake) that will be needed]. This, in turn, makes possible an estimate of the amount of tailings that will be generated for a given ore assay and U-recovery factor.[3–6] Allowance is made for any U_3O_8 produced by solution mining and as by-product from vanadium, copper, and phosphoric acid manufacture,[4–6] since these industries do not generate new tailings.

The radionuclide distribution in mill tailings is based on the present-day fraction (0.00715) of ^{235}U in natural uranium. One metric ton (t) of uranium, as it exists today, is assumed to be the remains of 0.365 t of ^{235}U and 1.850 t of ^{238}U that were initially present when the earth was "born" four billion years ago. This relationship between past and present is derived using the radioactive decay equation, $A = A_0e^{-\lambda\tau}$, for both ^{235}U and ^{238}U, where A is the current amount, A_0 is the initial amount, λ is the half-life of the isotope, and τ is elapsed time. By using ORIGEN2[7] to calculate decay of the initial amounts of ^{235}U and ^{238}U for 4×10^9 years, the present abundance of decay daughters in uranium ore can be ascertained. For a summary of the conditions that comprise the IDB mill tailings source term, see Fig. 2.1 and Table 2.1. All fuel demands are assumed to be filled solely by domestic production facilities.

ORNL DWG 84-278 R

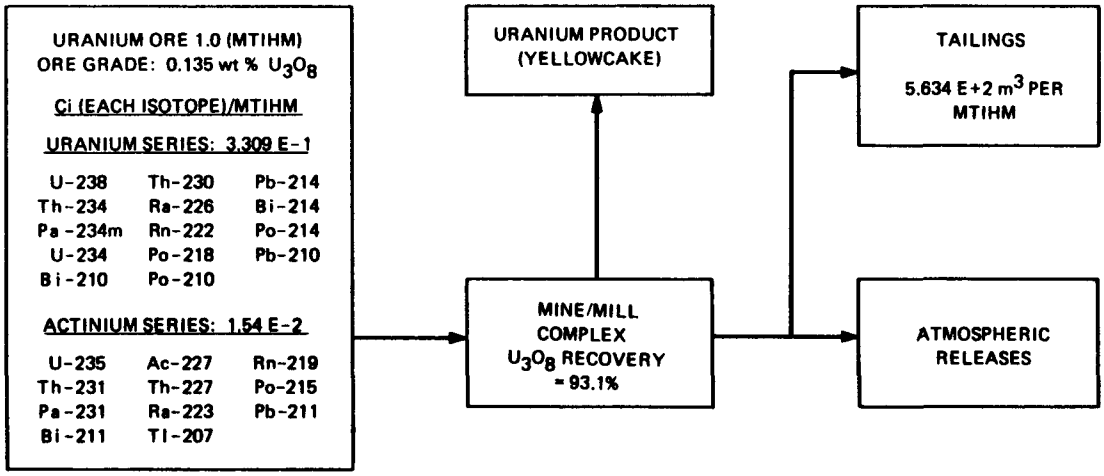

Fig. 2.1. Average uranium mill tailings source terms used for projections (1983–2020).

Table 2.1. Fractions of elements in uranium ore that report to mine/mill plant waste and product streams

	Waste streams		Product stream[a,b]
Element	Tailings[c]	Atmospheric releases	Uranium (yellowcake)
Uranium	6.800E-2	1.0E-3	9.310E-1
Proctactinium	1.000E+0	0.0E+0	0.000E+0
Thorium	9.923E-1	8.0E-6	7.692E-3
Actinium	1.000E+0	0.0E+0	0.000E+0
Radon	9.000E-1	1.0E-1	0.000E+0
Other	9.994E-1	6.0E-7	5.994E-4

[a]Includes yellowcake from solution mining and by-product U_3O_8.
[b]Conventional mines/mills represent 75.7% of total production.
[c]Assume density = 1.6 t/m^3.

2.2 CONVENTIONAL MINES/MILLS

Conventional underground and open-pit mine/mill complexes provide ~75–80% of all domestic U_3O_8 production. In general, the ores from open-pit mines are of lower grade than those obtained from underground mines (i.e., 0.1 vs ~0.15 wt % U_3O_8, respectively), but open-pit mines produce 52% of the uranium, while underground mines produce 48%.[8] The ore assay and uranium recovery factors, which average ~93–94%, determine the amount of tailings generated. A density of 1.6 t/m^3 is assumed for the tailings.

2.3 SOLUTION MINING

Solution mining (also called in situ mining) recovers U_3O_8 from relatively low-grade ores (<0.1 to 0.105 wt % U_3O_8) by pumping acid or alkaline leach solution through the ore body and processing the uranium-laden solution in aboveground facilities. This mining method is attractive because it does not produce mill tailings. While uranium production by conventional methods has decreased significantly, solution mining production has remained relatively steady. In 1979 solution mining accounted for only 6–8% of the uranium produced,[9] but currently it represents ~11%. Potentially, as much as 16% of the total U_3O_8 production in the United States could be done by solution mining.[3]

2.4 BY-PRODUCT RECOVERY

Recovery of U_3O_8 as a by-product of the vanadium, copper, and phosphoric acid industries has remained essentially constant in recent years.[4–6] With the decrease in conventional U_3O_8 production, the by-product U_3O_8 increased from ~5% of the total production in 1980–1981[5–6] to over 9% in 1982.[4] In the future it could represent as much as 10.5% of the total U_3O_8 produced domestically.[2]

2.5 GENERAL DISCUSSION

The uranium industry has been depressed since 1981 due to greater foreign competition and to deferments and cancellations in nuclear power plant construction. However, several new plants are expected to come

on-line in the late 1980s and early 1990s, which will cause a peak in uranium production capacity in about 1990.[3] After 1990 the decommissioning of some older plants will begin, and unless nuclear energy is again accepted as a viable energy alternative, a continuing decline in uranium production can be expected. In this discussion, the impact of foreign imports (or exports) on U_3O_8 production has not been considered.

The detailed background information described in Sects. 2.2—2.4 is presented in Table 2.2.

Table 2.2. Information used in source term development

Years	Average ore grade (U_3O_8)	Average U_3O_8 recovery (%)	U_3O_8 product (% of total)		Total U_3O_8 production[a] (10^3 t)	Tailings generated[b] (m^3/MTIHM)
			Conventional mining	Solution mining plus by-product		
1983–1990[c]	0.120	94.4	80.5	19.5	127.28	523.2
1991–2010[d]	0.179	93.1	73.2	26.8	510.11	323.2
2011–2020[d]	0.105	92.8	77.4	22.6	379.66	584.9

[a]Based on the "most likely" uranium demand forecast in 1982 (see Ref. 1).
[b]Assume density = 1.6 t/m^3; MTIHM (metric tons of initial heavy metal) includes by-product and solution mining uranium.
[c]Used average of 1980–1982 values given in Refs. 4–6.
[d]Adapted from data given in Ref. 3.

2.6 REFERENCES

1. U.S. Department of Energy, Statistical Data of the Uranium Industry, GJO-100(83), p. 68, Table XII-6, Grand Junction Area Office, Grand Junction, Colorado (January 1, 1983).

2. U.S. Department of Energy, Technology for Radioactive Waste Management, DOE/ET-0028, Vol. 1, Sect. 3.2 (May 1979).

3. S. A. Thomas, L. R. Sanders, E. W. Berkoff, J. R. Ellis, and P. C. deVergie, "Production Capability of the U.S. Uranium Industry" in Uranium Industry Seminar — Proceedings, October 21-22, 1981, Grand Junction, Colorado, GJO-108(81), pp. 160-163, published by U.S. Department of Energy, Grand Junction Area Office.

4. U.S. Department of Energy, Statistical Data of the Uranium Industry, GJO-100(83), Sect. VII, Grand Junction Area Office (January 1, 1983).

5. U.S. Department of Energy, Statistical Data of the Uranium Industry, GJO-100(82), Sect. VII, Grand Junction Area Office (January 1, 1982).

6. U.S. Department of Energy, Statistical Data of the Uranium Industry, GJO-100(81), Sect. VII, Grand Junction Area Office (January 1, 1981).

7. A. G. Croff, ORIGEN2 — A Revised and Updated Version of the Oak Ridge Isotope Generation and Depletion Code, ORNL-5621 (July 1980).

8. Jack Q. Jones, "Uranium Production," in Uranium Industry Seminar — Proceedings, October 21-22,1981, Grand Junction, Colorado, GJO-108(81), p. 148, published by U.S. Department of Energy, Grand Junction Area Office.

9. U.S. Department of Energy, Statistical Data of the Uranium Industry, GJO-100(80), Sect. XII, Grand Junction Area Office (January 1, 1980).

3. UF_6 CONVERSION

C. W. Forsberg

3.1 SUMMARY

Yellowcake received from uranium mine/mill facilities must be purified and converted to UF_6 before undergoing uranium enrichment operations. Two different processes are used. The fluorination/fractionation process converts yellowcake to UF_6 and purifies the UF_6 by distillation.[1] The solvent extraction-fluorination process purifies the uranium and then converts it to UF_6.[2] The second process can also produce purified uranium nitrate or oxide suitable for fuel fabrication. There are currently two commercial conversion facilities in the United States — one of each type. Figures 3.1 and 3.2 illustrate waste and product flows for these two processes, while Tables 3.1 and 3.2 give typical compositions of waste and product streams for the two processes. The fluorination/fractionation process produces well-defined waste streams, but the solvent extraction-fluorination process waste streams are less defined (see Sect. 3.4).

3.2 CHARACTERISTICS OF YELLOWCAKE

The raw uranium concentrate from the uranium mills is called yellowcake. Originally yellowcake referred to a U_3O_8 concentrate produced by many mills; however, today the term is generically used to refer to any uranium concentrate shipped from the mills. The chemical compositions of these concentrates vary depending upon mill type, ore type, and ore grade. Table 3.3 shows the typical chemical composition of feed to a UF_6 conversion plant, while Table 3.4 lists the assumptions used to generate the table. Table 3.5 shows the typical radionuclide analysis of the feed to the UF_6 conversion plants.

A series of detailed studies on UF_6 conversion plants[1,2] used yellowcake source terms which had relatively high concentrations of thorium and radium. Because of recent changes in uranium mill operations, types of ore mined and sources of ore, current yellowcake has lower levels of radionuclide impurities. Both old and new source terms

ORNL DWG 83-490R

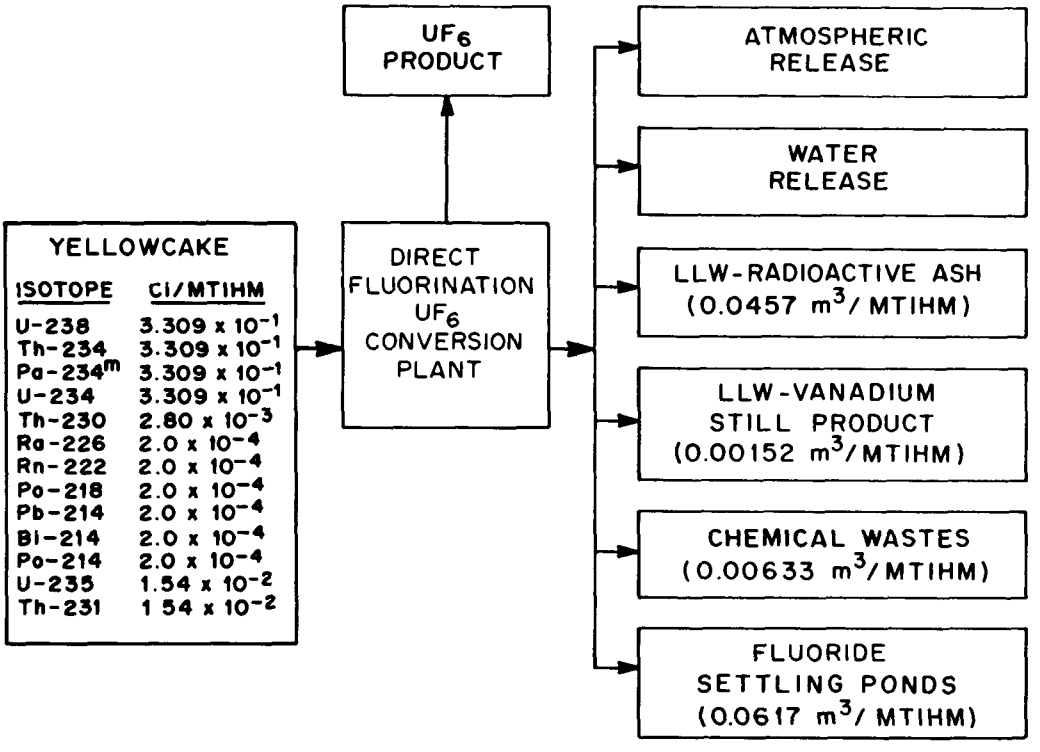

Fig. 3.1. Flowsheet for a direct fluorination/fractionation process for conversion of yellowcake to UF_6.

Table 3.1. Fractional distribution of elements in plant waste and product streams for a direct-fluorination UF_6 conversion plant

	Waste streams						Product stream
Element	Atmospheric releases	Water releases	Radioactive ash	Vanadium still product	Chemical waste	Fluoride settling pond	Uranium (UF_6)
Uranium	2.50E-5	7.65E-5	3.51E-5	5.01E-4	1.00E-6	3.63E-5	9.9932E-1
Protactinium	3.30E-5	7.25E-6	1.00E+0	2.67E-5	1.00E-6	3.63E-5	0.00
Radium	3.36E-5	1.14E-3	9.99E-1	2.68E-5	1.00E-6	5.88E-6	0.00
Radon	3.22E-5	5.00E-1	5.00E-1	0.00	0.00		0.00
Other	3.27E-5	7.25E-6	1.00E+0	2.67E-5	1.00E-6	8.80E-6	0.00

ORNL DWG 84-262

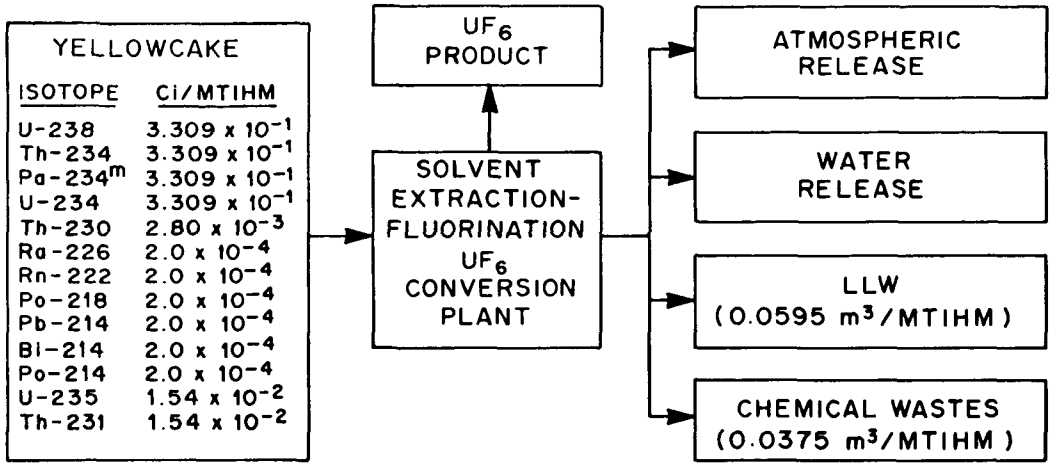

Fig. 3.2. Flowsheet for a solvent extraction-fluorination UF_6 conversion facility.

Table 3.2. Fractional distribution of elements in plant waste and product streams for a solvent extraction-fluorination UF_6 conversion plant

	Waste streams				Product stream
Element	Atmospheric releases	Water releases	Low-level wastes	Chemical wastes	Uranium (UF_6)
Uranium	1.35E-5	1.13E-9	2.54E-4	2.79E-5	9.997E-1
Protactinium	9.54E-6	6.54E-10	5.01E-1	2.79E-5	4.99E-1
Thorium	1.28E-5	1.15E-9	1.00E+0	2.50E-6	0.0
Other	5.35E-6	1.15E-11	1.00E+0	2.25E-6	0.0

Table 3.3. Chemical composition of yellowcake feed to the model UF_6 conversion plant

(Assumptions listed in Table 3.4)

Constituent of feed[a]	Concentration (wt %)	Quantity (t/year)
Uranium (U)	73.53	10,000
Impurities		
Ammonium (NH_4^+)	3.09	322
Sodium (Na)	2.41	241
Silica (SiO_2)	1.2	120
Sulfate (SO_4^{2-})	2.94	294
Arsenic (As)	0.06	6
Boron (B)	0.003	0.3
Calcium (Ca)	0.19	19
Carbonate (CO_3^{2-})	0.31	31
Chloride, bromide, iodide[b]	0.07	7
Fluoride (F^-)	0.01	1
Iron (Fe)	0.38	38
Molybdenum (Mo)	0.10	10
Phosphate (PO_4^{3-})	0.26	26
Potassium (K)	0.13	13
Vanadium (V)	0.12	12
Water (H_2O)	1.91	191
Extractable ogranics	0.05	5
Nitric acid-insoluble uranium	0.01	1

[a]Laboratory analysis procedure based on chemical form in parenthesis.

[b]Calculated as Cl^-.

Table 3.4. Assumptions used in calculating feed to the model yellowcake-to-UF_6 conversion plant

1. The feed is a composite of:

   (a) 85% acid-leached yellowcake which has been precipitated by addition of ammonia and steam dried.

   (b) 15% alkaline (carbonate)-leached yellowcake which has been precipitated with sodium hydroxide and dried.

   (c) The proportion of acid- vs alkaline-leached yellowcake was calculated from the relative ore processing rates, based on a survey of active mills made in the spring of 1973.[a]

2. The acid-leached yellowcake is a partially cracked ammonium diuranate. Half the uranium is assumed to be present as $(NH_4)_2U_2O_7$ and the other half as UO_3. Its chemical composition is:

   U = 74.20 wt % (average of ammonium diuranate received at the Kerr-McGee UF_6 plant in 1973).[b]

   Na = 0.85 wt % on a U basis (average of ammonium diuranate received at the Kerr-McGee UF_6 plant in 1973).[b]

   NH_4^+ = 3.63 wt % on a U basis (calculated).

3. Alkaline (carbonate)-leached yellowcake is assumed to be $Na_2U_2O_7$ with a chemical composition of:

   U = 69.80 wt %.
   Na = 11.3 wt % on a U basis.
   (Average of $Na_2U_2O_7$ received at the Kerr-McGee UF_6 plant in 1973.[b])

4. Impurities other than radionuclides, sodium, ammonium, and silica are averages from the current feeds to the Allied Chemical UF_6 plant,[c] the Kerr-McGee UF_6 plant,[b] and the DOE-Fernald refinery.[d]

5. The silica content is the average of values for four currently or recently active mills (Anaconda, Uravan, Rifle, and Kerr-McGee).[e]

6. The model UF_6 plant processes only virgin yellowcake (natural uranium) from United States mills (i.e., no recycle material from fuel reprocessing and no foreign ore concentrates).

7. The feed composition containing "low" levels of ^{230}Th and ^{226}Ra impurities is derived from recent data on the isotopic analysis of the feed to the Allied Chemical Metropolis UF_6 product plant,[f] i.e.:

   ^{230}Th = 2800 p Ci per g of U_{nat}.

   ^{226}Ra = 200 p Ci per g of U_{nat}.

8. The yellowcake feed has aged in a sealed drum for 6 months (minimum) to 10 years (maximum) since milling so that:

   (a) Thorium-234 ($t_{1/2}$ = 24.1 d) and ^{234m}Pa ($t_{1/2}$ = 1.18 min) daughters have grown back to secular equilibrium with ^{238}U. Thorium-234 requires 168 d to grow back to 99% of secular equilibrium with ^{238}U. Metastable ^{234}Pa requires approximately 7 min to grow back to secular equilibirum with ^{234}Th, so that it is in secular equilibrium with ^{234}Th at all times.

Table 3.4 (continued)

8. (continued)

(b) The radioactivity due to the decay, since milling, of ^{234}U to ^{230}Th ($t_{1/2}$ = 8.3 × 10^4 years) and ^{235}U (only 0.71% of natural uranium) is negligible.

(c) The radioactivity due to the decay, since milling, of the ^{230}Th impurity to ^{226}Ra ($t_{1/2}$ = 1.62 × 10^3 years) is negligible.

(d) The ^{222}Rn daughter ($t_{1/2}$ = 3.83 d) has grown back to secular equilibrium with the ^{226}Ra impurity. While the amount of ^{222}Rn accumulating in the sealed drum is small, radon is an inert gas and potentially all of it might be released from the plant.

(e) The daughter products of ^{222}Rn are not listed individually as source terms, either because they have half-lives <2 h and do not accumulate in the bio-environment (^{218}Po, ^{214}Pb, ^{214}Bi, and ^{214}Po) or because they individually contribute <0.02% of the total relative hazard (^{210}Pb, ^{210}Bi, and ^{210}Po). The daughters of ^{222}Rn are included when the dose from radon release is calculated. The relative hazard is estimated by dividing the curies present in the yellowcake feed by the Radiation Concentration Guide for that radionuclide (presented in Code of Federal Regulations, Title 10, Part 20, Appendix B, Table 2, Column 1, soluble nuclide). It takes ~11.6 years for ^{210}Pb to increase to a level where it contributes 0.02% of the total relative hazard.

9. Based on Ref. 1, Table 4.2.

[a]M. B. Sears, et al., Correlation of Radioactive Waste Treatment Costs and the Environmental Impact of Waste Effluents in the Nuclear Fuel Cycle for Use in Establishing "As Low As Practicable" Guides — Milling of Uranium Ores, ORNL/TM-4903, Vol. 1 (May 1975), p. 224.

[b]B. Brown (Plant Manager, Kerr-McGee Sequoyah UF_6 production facility) and J. Craig (Engineering Manager), personal communication to M. B. Sears, Oct. 15, 1974.

[c]A. D. Riley (Plant Manager, Allied Chemical UF_6 plant) and J. H. Thomas (Technical Superintendent), personal communication to M. B. Sears, Nov. 13, 1974.

[d]J. Cavendish (Head, Production Technology Department, National Lead Company of Ohio), personal communication to M. B. Sears, Nov. 12, 1974.

[e]G. P. Lang, E. N. Nelson, and C. W. Kuhlman, A Process for Controlling Insoluble Uranium in Ore Concentrates, MCW-1420, Mallinkrodt Chemical Works (Feb. 2, 1959), p. 13.

[f]M. B. Sears, et al., Correlation of Radioactive Waste Treatment Costs and the Environmental Impact of Waste Effluents in the Nuclear Fuel Cycle — Conversion of Yellowcake to Uranium Hexafluoride, Part I. The Fluorination — Fractionation Process, ORNL/NUREG/TM-7 (Sept. 1977), pp. 271-72 and 278-80.

Table 3.5. Radionuclide analysis of yellowcake

Radionuclide	Source terms[a] (Ci/MTIHM) Current[b]	Old[c]	Radionuclide	Source terms[a] (Ci/MTIHM) Current[b]	Old[c]
U-238	3.309E-1	3.309E-1	Po-218	2.0E-4	1.57E-3
Th-234	3.309E-1	3.309E-1	Pb-214	2.0E-4	1.57E-3
Pa-234m[d]	3.309E-1	3.309E-1	Bi-214	2.0E-4	1.57E-3
U-234	3.309E-1	3.309E-1	Po-214	2.0E-4	1.57E-3
Th-230[e]	2.80E-3	1.42E-2	U-235	1.54E-2	1.54E-2
Ra-226[f]	2.0E-4	1.57E-3	Th-231	1.54E-2	1.54E-2
Rn-222	2.0E-4	1.57E-3			

[a]The "old" (prior to July 10, 1974) definition of a curie of natural uranium (U_{nat}) is used in the rest of this chapter to be consistent with literature sources. One curie of U_{nat} is the sum of 3.7E10 dis/s from ^{238}U, plus 3.7E10 dis/s from ^{234}U, plus 9.0E8 dis/s from ^{235}U. Under the "old" definition, 1 kg of U_{nat} is equivalent to 333.3 μCi of U_{nat} or the sum of 333.3 μCi of ^{238}U, 333.3 μCi of ^{234}U, and 8.1 μCi of ^{235}U. Under the "current" (July 10, 1974) definition, 1 kg of U_{nat} is equivalent to 677.0 μCi of U_{nat}, or the sum of 330.9 μCi of ^{238}U, 330.9 μCi of ^{234}U, and 15.4 μCi of ^{235}U. There is approximately 1% difference between the "old" and the "current" curie in calculating source terms, except for ^{235}U. The new definition is used in the Summary section of this chapter.

[b]Based on Ref. 1, Table A-2.

[c]Based on Ref. 1, Table 4.2.

[d]Metastable ^{234m}Pa, $t_{1/2}$ = 1.18 min.

[e]The ^{230}Th content is assumed to be 2800 pCi/g of U_{nat}, based on the weighted-average feed to the Allied Chemical Metropolis UF_6 Plant in 1976, including "high-thorium" foreign concentrates.

[f]The ^{226}Ra content is assumed to be 200 pCi/g of U_{nat}, based on the calculated composite product of the domestic milling industry. This is slightly higher than the weighted average of 172 pCi/g of U_{nat} for the Allied Chemical feed.

are shown in Table 3.5. The new source terms are used in Figs. 3.1 and 3.2; but, the remainder of this chapter uses the old source terms, so that the information is traceable to original literature sources. For waste projection purposes, splits of radionuclides within the plant and initial source terms are required. These parameters are unaffected by use of two different source terms within this chapter.

3.3 YELLOWCAKE CONVERSION BY THE FLUORINATION/FRACTIONATION PROCESS

3.3.1 Introduction

Currently, more than half of the United States yellowcake is converted to UF_6 by the fluorination/fractionation process. The single commercial facility using this process is owned by Allied Chemical Corporation and is located at Metropolis, Illinois. The flowsheets and waste estimates included here are primarily from an NRC study by M. S. Sears, et al.[1] That study used as a basis the Allied Chemical general process flowsheet, but some of the details of the process may differ.

3.3.2 Conversion Process

The yellowcake conversion process consists of four basic steps:

$(NH_4)_2\ U_2O_7 \xrightarrow{heat} 2NH_3(g) + 2UO_3(s) + H_2O\ (g)$	Calcination	(1)
$UO_3(s) + H_2(g) \rightarrow UO_2(s) + H_2O(g)$	Reduction	(2)
$UO_2(s) + 4HF \rightarrow UF_4 + 2\ H_2O(g)$	Hydrofluorination	(3)
$UF_4(s) + F_2(g) \rightarrow UF_6(g)$	Fluorination	(4)

In addition to these steps, there are a variety of waste treatment operations and other processes to handle various impurities in the feed. Figure 3.3 illustrates the general flowsheet, while Fig. 3.4 shows the detailed flowsheet. The detailed flowsheet is based on a plant with an annual capacity of 10,000 t/year of uranium, assuming 300 d of operation per year.

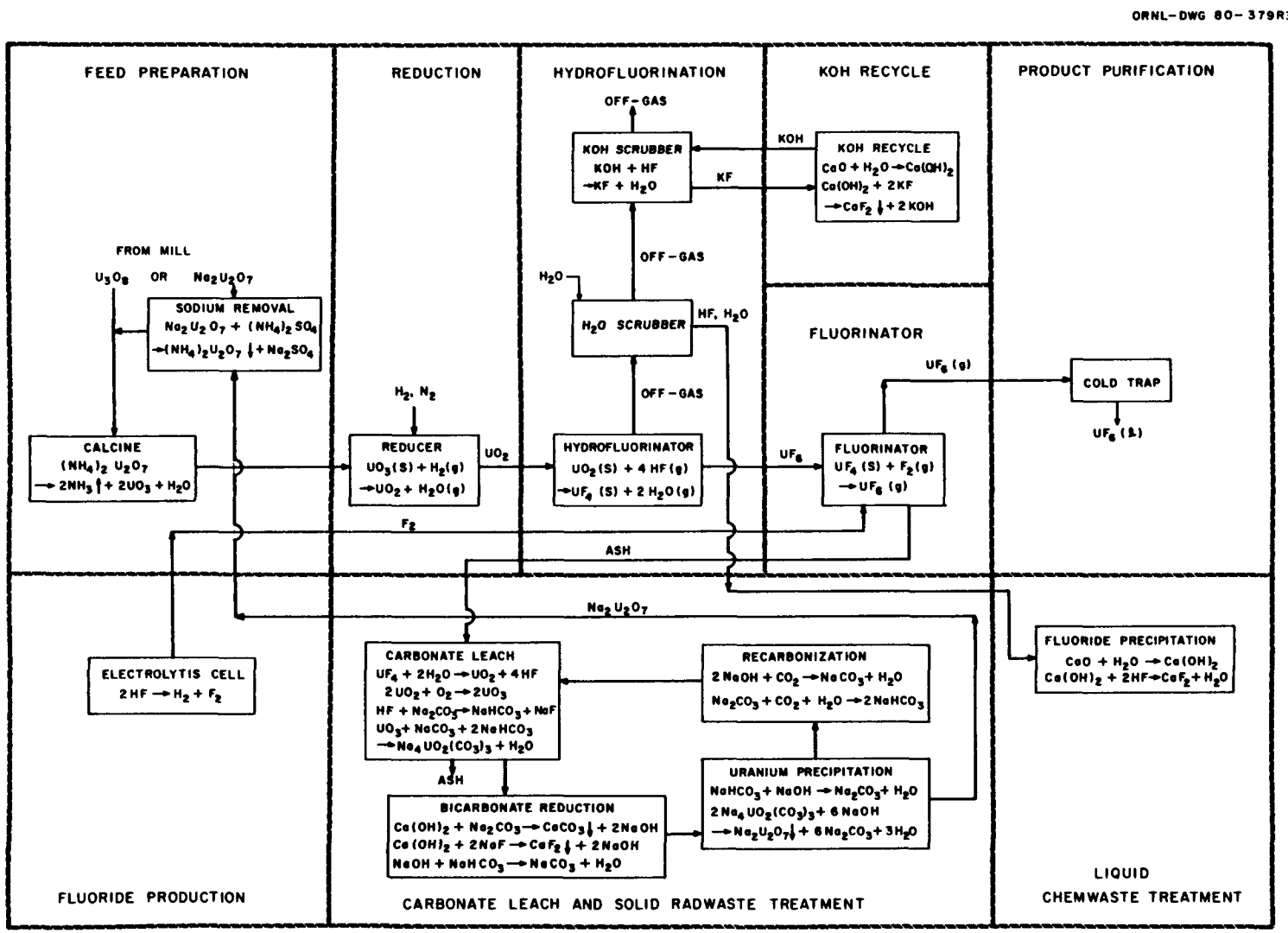

Fig. 3.3. UF_6 production via direct fluorination.

REPRODUCED FROM
BEST AVAILABLE COPY

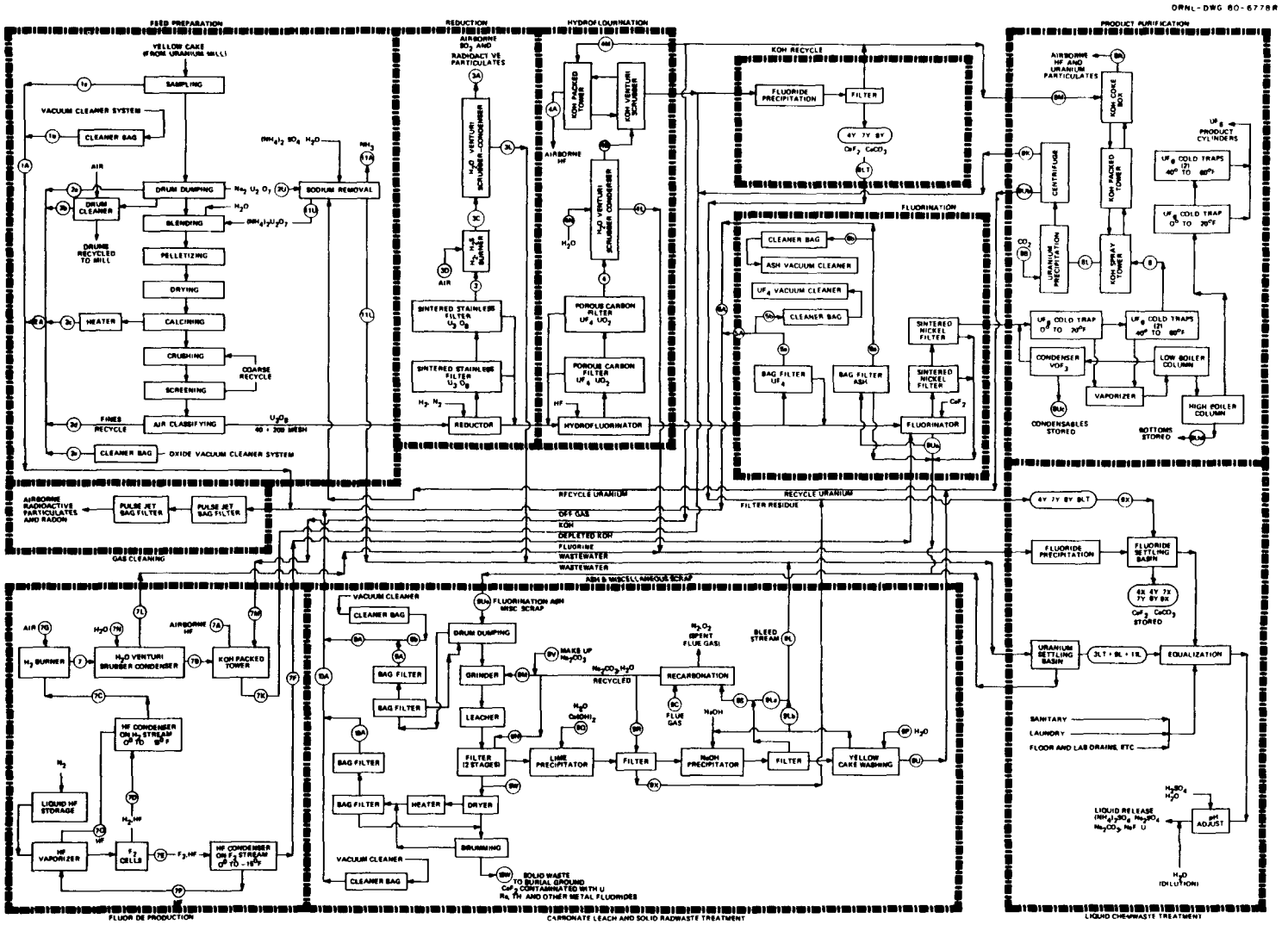

Fig. 3.4. UF_6 production via direct fluorination — process flowsheet.

3.3.3 Wastes Generated

The value of uranium is sufficiently high that a large number of recycle streams exist in the real facility. This produces a large number of waste streams. Tables 3.6 and 3.7 list the chemical wastes released to the air and water, respectively, while Tables 3.8 and 3.9 list the radwastes lost to the air and water. All of these releases are low.

The process also produces three types of solid wastes, as shown in Table 3.10. The primary radwaste from the process is the carbonate leach ash from the carbonate leach and solid waste treatment section of the process. This subsystem recovers uranium from solid wastes generated within the plant. It is, in practice, a small uranium mill that produces its own type of tailings. Most of the solid wastes for this subsystem are generated in the fluorinator, which converts solid UF_4 to volatile UF_6. Since most ore impurities have nonvolatile fluorides, this step produces an ash that contains nearly all the impurities found in the original yellowcake. In practice, the ash is >90% CaF_2. The CaF_2 is added as a solid to the fluidized bed so impurities can collect on its surface. If the impurity level becomes too high, the bed particles will cake. The CaF_2 throughput is determined by the need to avoid bed caking and formation of low-melting uranium compounds. This ash is leached to recover residual uranium, but most of the thorium, radium, and other radionuclides stay with the ash. The ash waste is dried, packaged, and sent to the burial grounds.

The second radwaste stream is the still tops and bottoms. After the UF_6 is produced, it is further purified by distillation to separate the volatile fluoride impurities from the UF_6. Since distillation is not perfect, some UF_6 is found in the impurity streams. The uranium losses to these streams are estimated to be <0.05% of the uranium processed. The major impurity is vanadium, whose value is sufficiently high that these wastes are being stored onsite for possible future recovery of vanadium. Most of the uranium loss will also be recovered in that process. This study will not consider this a waste stream, since the vanadium and uranium will probably be recovered; however, this could become a future radwaste source.

Table 3.6. Airborne chemical wastes from a model 10,000-t/year fluorination/fractionation UF_6 plant

Chemicals[a]	Release rate (kg/d)
NH_3	1796
SO_2	590
HF	0.57

[a]Based on Ref. 1, Table 4.7.

Table 3.7. Liquid chemical waste releases from the model 10,000-t/year fluorination/fractionation UF_6 plant

Principal chemicals[a,b,c,d]	Flow rate (kg/d)
Carbonate (CO_3^{2-})	5.22E1
Fluoride (F^-)	9.53E0
Sulfate (SO_4^{2-})	8.75E3
Ammonium (NH_4^+)	2.77E3
Sodium (Na^+)	6.35E2
Potassium (K^+)	7.76E1
Uranium (U)	2.54E0

[a]Hydronium (H_3O^+, acid) and hydroxide (OH^-, base) ions not shown. Wastes are neutralized before release.

[b]Present as sulfite (SO_3^{2-}), rather than sulfate (SO_4^{2-}).

[c]Total liquid flow is 2.83E2 m^3/d.

[d]Based on Ref. 1, Table 4.10.

Table 3.8. Airborne radwaste releases from the model 10,000-t/year fluorination/fractionation UF_6 plant

Type of release[a]	U (kg/year)	Principal radionuclides, Ci/year					
		U_{nat}[b]	^{234}Th	^{234m}Pa[c]	^{230}Th	^{226}Ra	^{222}Rn[d]
Crude U dusts (yellowcake, UO_3, UO_2, UF_4)	220.08	7.40E-2	7.40E-2	7.40E-2	3.13E-3	3.46E-4	
Refined UF_6 hydrolysis products and fluorination off-gas dust	27.4	9.13E-3	4.71E-4	4.71E-4	2.00E-5	2.22E-6	
Ash dust	0.890	2.94E-4	7.77E-3	7.77E-3	1.54E-3	1.80E-4	
Total	250.3	8.33E-2	8.22E-2	8.22E-2	4.69E-3	5.28E-4	7.18E1

[a]Based on Ref. 1, Table 4.6b.

[b]One curie of natural uranium is defined as the sum of 3.7E10 dis/s from ^{238}U, 3.7E10 dis/s from ^{234}U, and 9.0E8 dis/s from ^{235}U; it is also equivalent to 3000 kg of U_{nat}.

[c]Metastable ^{234m}Pa; $t_{1/2}$ = 1.18 min.

[d]As gas. Does not include ^{222}Rn generated in dust particles by decay of ^{226}Ra.

Table 3.9. Liquid radwaste releases from model 10,000-t/year fluorination/fractionation UF_6 plant

Nuclide	MPC[a] (μCi/mL)	Yearly release (Ci/year)	Average concentration of liquids[b] (μCi/mL)
U_{nat}[c]	3.0E-5	2.55E-1	3.00E-6
^{234}Th	2.0E-5	9.17E-2	1.08E-6
^{234m}Pa[d]	3.0E-6	9.17E-2	1.08E-7
^{230}Th	2.0E-6	1.03E-2	1.22E-8
^{226}Pa	3.0E-8	1.80E-2	2.12E-7

[a]Maximum permissible concentration in water for general population, CFR 20, Appendix B, Table II.

[b]Before dilution for release.

[c]One curie of natural uranium is defined as the sum of 3.7E10 dis/s from ^{238}U, 3.7E10 dis/s from ^{234}U, and 9.0E8 dis/s from ^{235}U; it is also equivalent to 3000 kg of U_{nat}.

[d]Metastable ^{234m}Pa, $t_{1/2}$ = 1.18 min.

Table 3.10. Solid wastes generated by the model 10,000-t/year fluorination/fractionation UF_6 plant

Source	Code	Quantity (kg/year)	Principal radionuclides found[a,b]							
			Total, Ci/year				Average concentration, μCi/g			
			U_{nat}[c]	^{234}Th, ^{234m}Pa (each)	^{230}Th	^{226}Ra, ^{222}Rn, ^{218}Po, ^{214}Pb, ^{214}Bi, ^{214}Po (each)	U_{nat}[c]	^{234}Th, ^{234m}Pa[d] (each)	^{230}Th	^{226}Ra, ^{222}Rn, ^{218}Po, ^{214}Pb, ^{214}Bi, ^{214}Pb (each)
Average composition of earth's crust[e]							1.0E-6	1.0E-6	1.0E-6	1.0E-6
Carbonate-leached ash from fluorination, principally CaF_2, dried and drummed for disposal	10W	1.11E6	1.17E-1	1.17E-1	1.42E+2	1.57E+1	1.0E-4	1.0E-4	1.3E-1	1.4E-2
Still tops and bottoms, stored in gas-tight containers	8Uc + 8Ud	4.02E4	1.67E0	1.67E0	3.79E-3	4.22E-4	4.2E-2	4.2E-2	9.3E-5	1.0E-5
CaF_2–$CaCO_3$ stored in the fluoride settling basin	4X + 4Y + 7X + 7Y + 8Y + 9X	1.61E6	1.21E-1	1.21E-1	1.25E-4	9.24E-5	7.5E-5	7.5E-5	7.8E-8	5.7E-8
Total		2.77E6	1.89E0	1.89E0	1.42E+2	1.57E+1				

[a]Only radioactive materials in the yellowcake feed to the plant are considered; possible radioactive impurities in the chemical feed to the plant are not included.

[b]Stored 6 months so that ^{234}Th and ^{234m}Pa are in secular equilibrium with ^{238}U, and radium daughters through ^{214}Po are in secular equilibrium with ^{226}Ra; assumes negligible loss of ^{222}Rn gas during storage.

[c]One curie of U_{nat} is defined as the sum of 1 Ci of ^{238}U, 1 Ci of ^{234}U, and 2.43E-2 Ci of ^{235}U; 1 Ci of U_{nat} is also equivalent to 3000 kg of U_{nat}.

[d]Metastable ^{234m}Pa, $t_{1/2}$ = 1.18 min.

[e]Estimated by assuming the presence of 3 ppm of uranium in the earth's crush and secular equilibrium.

The third and final source of waste from this process is the fluoride settling pond in the liquid chemwaste treatment section of the plant. A large variety of liquid fluoride waste streams are sent to this pond where the insoluble fluorides, primarily CaF_2, precipitate. Very little uranium or other radioactive materials reach this area. The solids in the pond are treated as nonradioactive chemical wastes, because the levels of radioactivity are only slightly above background. Recent changes in operating procedures allow the CaF_2 to be recycled to the fluorine production units for fluorine recovery and elimination of a potential hazardous chemical waste stream.

3.3.4 Wastes Generated Per Metric Ton of Uranium

Based on the above information, it is estimated that 111 kg of wastes are generated per metric ton of uranium converted from U_3O_8 to UF_6. Assuming a density of 2.54 g/cm^3 (80% theoretical density CaF_2), this indicates 0.05 m^3 of wastes generated per metric ton of heavy metal. The wastes, primarily calcium fluoride with other metal fluorides, are only slightly soluble. The radioactive materials in the wastes are almost entirely uranium daughter products, since uranium losses in the process are very near zero. More than 99.95% of the uranium in the yellowcake is shipped out as UF_6, with the residual uranium found in the distillation still tops and bottoms. Table 3.1 shows a total plant balance of these various streams.

3.4 SOLVENT EXTRACTION-FLUORINATION PRODUCTION OF UF_6

3.4.1 Introduction

The solvent extraction-fluorination process to produce UF_6 from yellowcake was evaluated[2] to estimate radwaste generated by this process. Significant uncertainty exists as to the quantities of wastes generated by this process because many wastes are currently sent to lagoons. Because of the chemical and radiological characteristics of these wastes, they will eventually have to be treated. Section 3.4.2 discusses the basic plant process. Section 3.4.3 discusses proposed alternatives to treat the wastes, while Sect. 3.4.4 estimates the waste volumes generated by these processes and the radionuclide contents of the waste.

3.4.2 Plant Process Flowsheet

The basic solvent extraction-fluorination process flowsheet for conversion of yellowcake to purified UF_6 is shown in Fig. 3.5, with a more-detailed version shown in Fig. 3.6.

The basic process consists of six major unit operations and six auxiliary operations. The major unit operations are:

1. Incoming yellowcake is dissolved in nitric acid to produce a highly acidic uranium nitrate solution.
2. The uranium nitrate solution is sent to a solvent extraction system for purification of the uranium nitrate. In the solvent extraction facility, the high-acid uranium nitrate solution is contacted with an organic solvent containing TBP, which selectively extracts the uranium from the aqueous solution. This high-acid aqueous raffinate is discarded with most of the impurities from the original yellowcake. The organic, loaded with uranium, is contacted with a low-acid aqueous solution that strips most of the uranium from the organic to the aqueous stream.
3. The aqueous stream containing the purified uranium nitrate is dried to produce a solid uranium nitrate, which is then heated, converting it to U_3O_8.
4. The U_3O_8 is reduced with hydrogen to yield UO_2. Some of this UO_2 is used directly as reactor fuel.
5. The UO_2 is reacted with HF in a fluidized bed to yield UF_4.
6. The solid UF_4 is reacted with F_2 in a fluidized bed to yield UF_6, the desired product.

3.4.3 Special Waste Problems

The primary waste stream from a solvent extraction-fluorination facility is the extraction raffinate stream (from process step 2). This single stream contains >99% of the radwaste from the facility. Its treatment and handling determines the total waste produced by the facility. Historically, this stream was generated as a nitric-acid-rich aqueous stream, which was neutralized with ammonia to yield a waste liquid rich in ammonium nitrate. These liquid wastes from government UF_6 conversion plants were released to nearby waterways. When the first commercial plant was being designed, changing regulations prohibited

ORNL-DWG 80-377R2

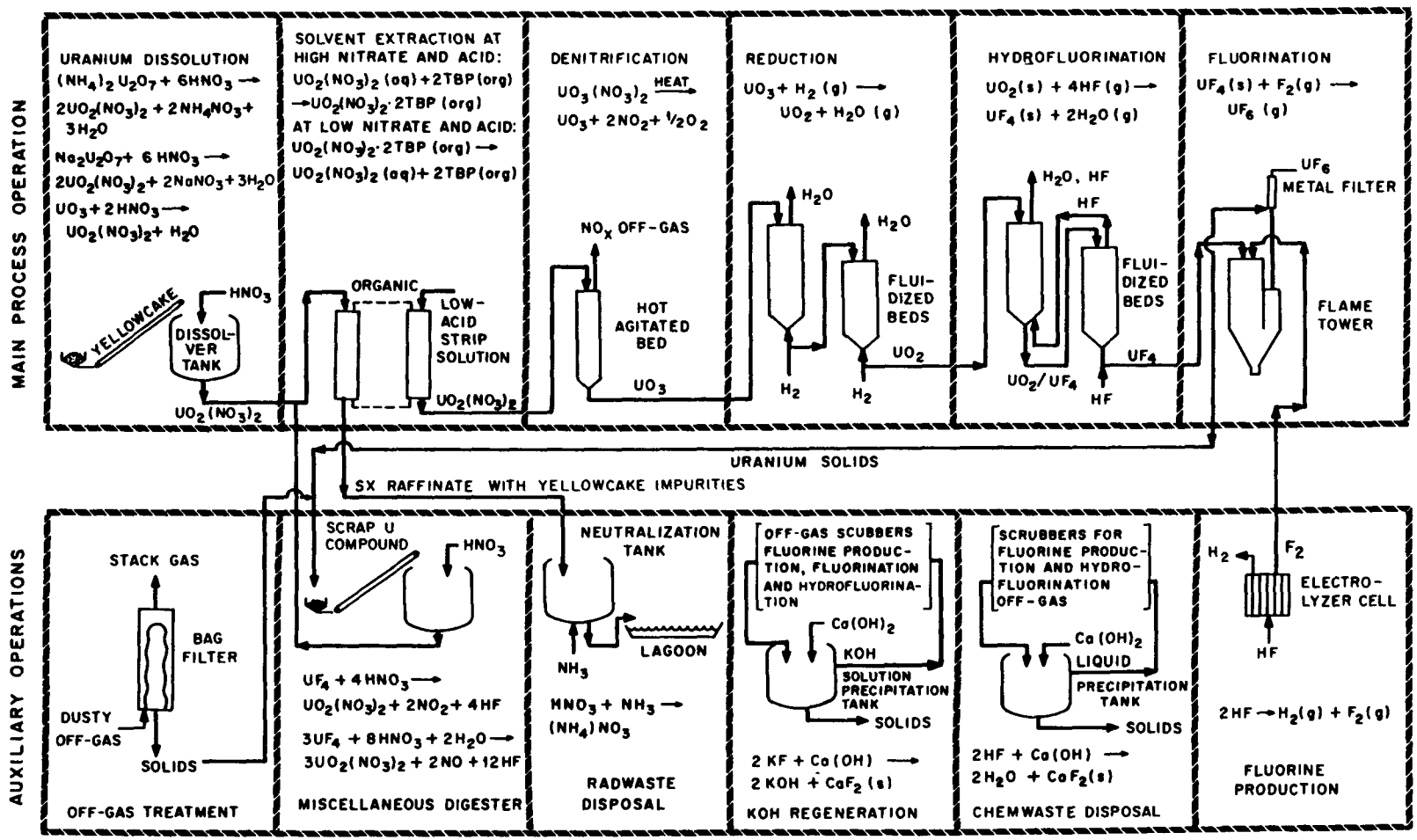

Fig. 3.5. Simplified flowsheet of solvent extraction-fluorination UF_6 conversion facility.

REPRODUCED FROM
BEST AVAILABLE COPY

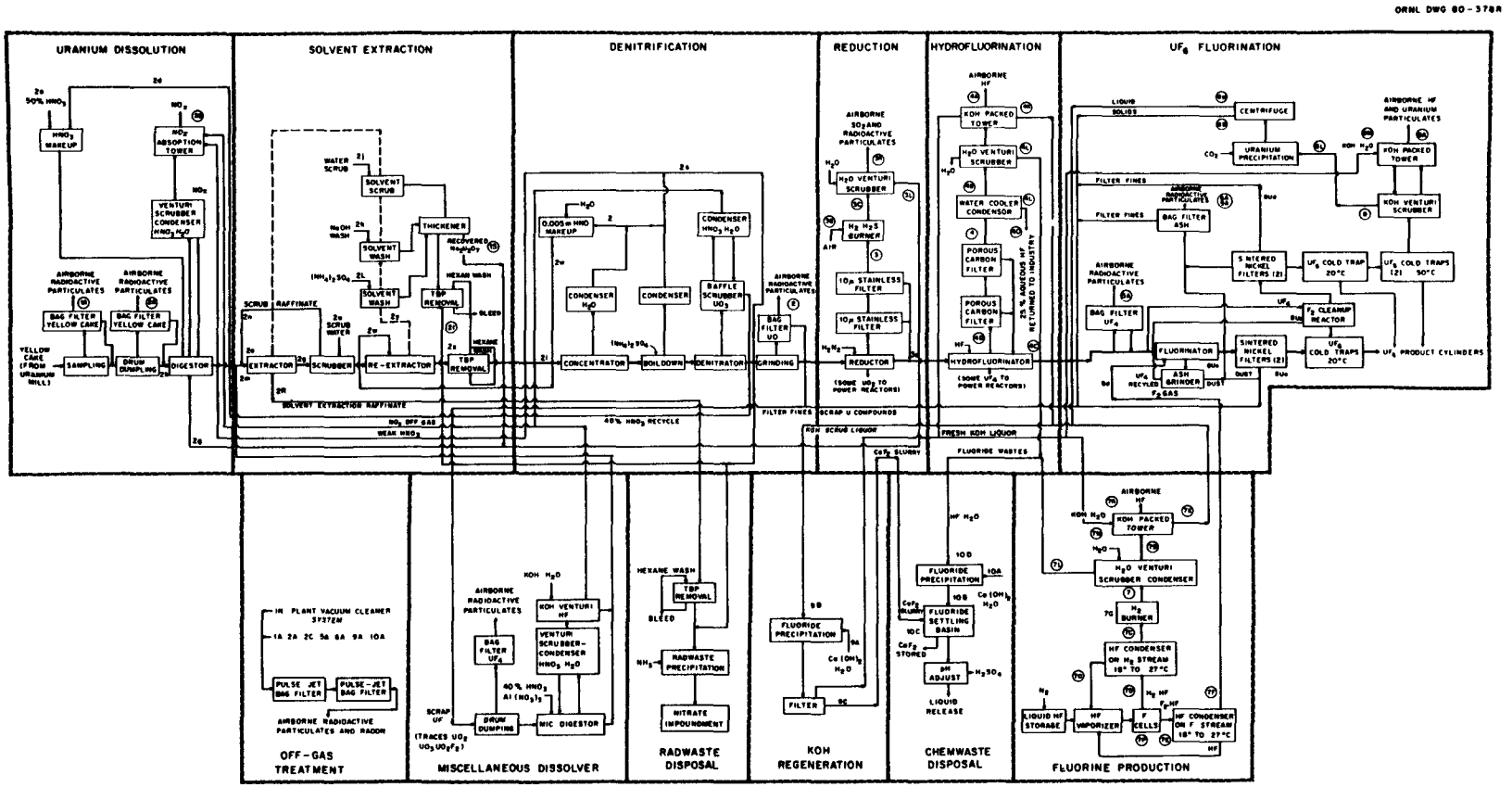

Fig. 3.6. UF_6 production via solvent extraction-fluorination — process flowsheet.

release to nearby waterways because of the chemical toxicity of the liquid waste. In the initial commercial plant (Kerr McGee),[3] it was proposed to use deep-well injection for disposal — an approach used for other chemical wastes. While the plant was under construction, another set of regulatory changes limited deep-well disposal. To allow plant operation, the wastes were stored in temporary lagoons. This was a temporary fix and current plans for the Kerr McGee facility are discussed below. There are many treatment options, but it is not clear which will be chosen for future facilities. The choice of treatment and disposal of this liquid waste will determine the waste volume from this fuel cycle operation.

Lagoon disposal is a temporary solution for several reasons. The ammonium nitrate in the wastes is extremely soluble; hence any leak from a lagoon would immediately spill ammonium nitrate into surface water streams. There are strict limits on allowable releases of ammonium nitrate, since it is a fertilizer and causes algae blooms in water. The radwastes in the lagoon must eventually be sent to burial grounds. Unfortunately, these radionuclides are in the nitrate form, which makes some of them very soluble. Also, ammonium nitrate is hygroscopic, making it unlikely that the waste lagoons will ever dry out totally to allow easy burial or solids handling.

Four options for the treatment of this nitrate waste stream are discussed here. The total waste volumes generated by these options will vary from zero to ~0.06 m^3/metric tons initial heavy metal (MTIHM). Cost and technical considerations will determine which option or options are finally chosen.

The compositions and flow rates of the major liquid waste streams to the lagoon are shown in Table 3.11. This is the "raw" material for the waste disposal systems.

One option is to dispose of the wastes in lagoons, as in current practice; but, for reasons discussed earlier, this is likely to be unacceptable. Table 3.12 lists the primary solids precipitated by the ammonia. Most of the radionuclides are in this precipitated sludge.

The second disposal option is to treat the wastes with calcium hydroxide to precipitate the radionuclides and then drain the remaining nitrate wastes to an acceptable chemical disposal site or use as fertilizer. For this option to be used, barium salts can be added to the

Table 3.11. Chemical composition of solvent extraction waste streams

Description	Solvent extraction raffinate[a]	Solvent treatment waste	Surplus weak acid
Code	2R	2T	2S
Volume, L/d	75,700	45,400	42,800
HNO_3, M	1.26		0.26
OH^-, M		0.04	
Chemicals[b], kg/d			
Uranium	7.6	0.9	
Nitrate (NO_3^-) SX additive	13,100	320	700
Ammonium (NH_4^+)			
Yellowcake feed	1,070		
SX additive	6	48	
Sodium (Na^+)			
Yellow cake feed	800		
SX additive	88	165	
Aluminum (Al^{3+}) SX additive	230		
Sulfate (SO_4^{2-})			
Yellowcake feed	980		
SX additive	16	127	
Arsenic (As)	20		
Calcium (Ca^{2+})	3		
Chloride (Cl^-)	23		
Fluoride (F^-)			
Yellowcake feed	3		
Scrap recycle	53		
Iron (Fe^{++})	130		
Molybdenum (Mo)	33		
Phosphate (PO_4^{3-})	87		
Potassium (K^+)			
Yellowcake feed	43		
SX additive	54		
Vanadium (V)	40		
Silica (SiO_2)	400		
Total	17,240		

[a]The raffinate may contain other chemicals in addition to those listed, since UF_6 plants analyze only for substances that create difficulties in the process operations.

[b]Laboratory analysis procedure based on chemical composition in parenthesis.

Table 3.12. Waste solids from solvent extraction/fluorination raffinate precipitation with ammonia[a]

Waste solid	Quantity (kg/d)
U	8.0
$Al(OH)_3$	660
SiO_2	400
CaF_2	116
$Fe(OH)_2$	240

[a]10,000-t U/year facility operating 300 d/year.

wastes. Barium sulfate then precipitates, carrying with it the radium in solution. This coprecipitation step removes residual radionuclides in the final liquor. The major technical uncertainty with this approach is the trace quantities of chemically hazardous materials remaining in the nitrate that might prohibit its use as a fertilizer. The chemical composition of the precipitate so generated is shown in Table 3.13. All the radionuclides to be disposed of would be in this precipitate.

The third waste disposal option is to use the acidic solvent extraction wastes, add sulfuric acid, and distill the nitric acid from the resulting solution for in-plant use. The residual sulfuric acid solution is then neutralized with calcium hydroxide, yielding a waste composed primarily of calcium sulfate. This is the approach Canada uses,[4] but the flowsheet has several restrictions. First, the yellowcake must not contain ammonia. Ammonia in a solvent extraction-fluorination plant will become ammonia nitrate, which could become explosive in a nitric acid-sulfuric acid distillation. Since Canadian uranium mills do not use ammonia, this presents no problem for Canadian operations. Changes in United States mill operation would be required, because most United States mills use ammonia to precipitate uranium.

The fourth waste disposal option is to take the neutralized radwaste stream from the lagoon, as generated in option 1, concentrate it to near the solubility limits of ammonium nitrate, and send the slurry to a molten-salt incinerator. Figure 3.7 shows the flowsheet, while Table 3.14 summarizes the waste streams. The molten-salt incinerator is a molten pot of sodium carbonate at about 900°C.[5–7] At these temperatures, ammonium nitrate is decomposed to nitrogen, water, and oxygen while radionuclides are converted to their oxide form. For nitrate wastes, some type of organic would also be added to add heat to the system and maintain slightly reducing conditions in the incinerator to avoid excessive NO_x formation.

For this study, it was assumed that the evaporator concentrated the nitrate solution to about 250 g NH_4NO_3 per 100 g of water. At 100°C, the solubility of NH_4NO_3 is about 871 g per 100 g of water; hence, the nitrate is totally soluble. It is assumed that methanol is the fuel. If methanol is added to reduce NO_x emissions to near zero via the reaction below, sufficient heat is generated to maintain the required temperatures.

Table 3.13. Solids from solvent extraction/fluorination raffinate precipitation with calcium hydroxide[a]

Solid	Quantity (kg/d)	Solid	Quantity (kg/d)
U	7.3	CaF_2	111
$Al(OH)_3$	660	$Fe(OH)_3$	240
$CaSO_4 \cdot 2H_2O$	1450	$CaMoO_4$	70
$BaSO_4$	190	$CaHPO_4 \cdot 2H_2O$	140
SiO_2	400	$Ca(VO_3)_2$	90
$Ca_3(AsO_4)_2$	50	$Ca(OH)_2$	550

[a]10,000-t U/year facility operating 300 d/year.

ORNL DWG 84-275R

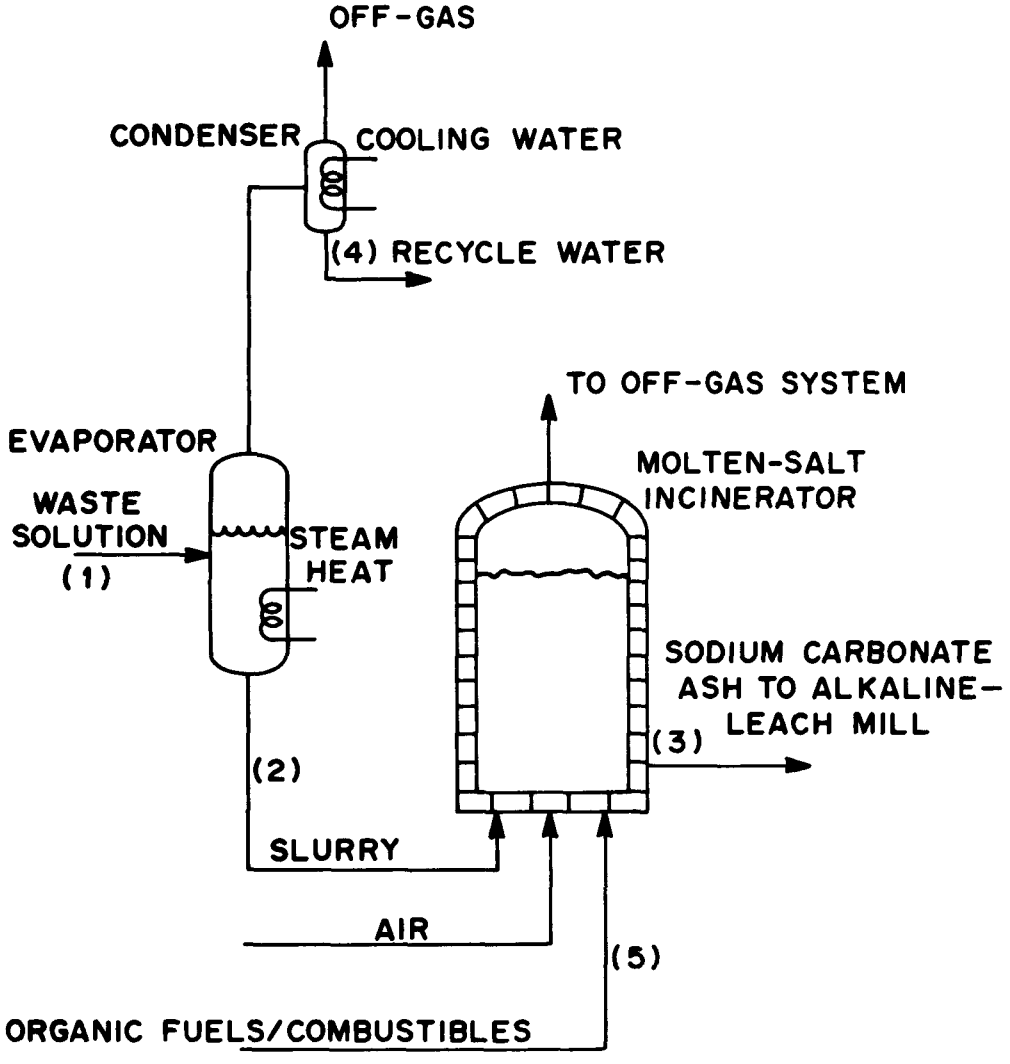

Fig. 3.7. Molten-salt incineration of ammonium nitrate waste from a UF_6 solvent extraction-fluorination facility.

Table 3.14. Waste process streams for waste raffinate disposal by molten-salt incineration at a solvent extraction/fluorination facility

Gas/solid liquid	Description	Flow rate (liquid, L/d; solid, kg/d)	Chemical flows (kg/d)					
Liquid	Waste stream from lagoon[a]	1.64E5	NO_3^-	1.41E4	NH_4^+	3.01E3	Other impurities	3.4E3
Liquid	Slurry from evaporator[b]	7.3E3	NO_3^-	1.41E4	NH_4^+	3.01E3	Other impurities	3.4E3
Solid	Carbonate ash[c]	2.29E4	Na_2CO_3	1.83E4	$Al_2(CO_3)_3$	9.97E2	Na_2SO_4	1.7E3
			$NaAsO_3$	3.87E1	$CaCO_3$	1.57E2	NaCl	3.8E1
			NaF	1.23E2	$FeCO_3$	2.69E2	$MoCO_3$	5.4E1
			Na_3PO_4	1.50E2	K_2CO_3	1.72E2	Na_2SiO_3	9.2E2
Liquid	Recycle water[d]	1.57E5						
Liquid	CH_4OH fuel[e]		CH_4OH	2.43E3				

[a]1.79E3 kg/d NH_3 to neutralize acid added before waste enters lagoon.
[b]Output based on nitrate analysis = 250 g NH_4NO_3/100 g H_2O.
[c]Uranium throughput ~8 kg/d.
[d]80% by wt = Na_2CO_3.
[e]Based on total nitrate, assumed all nitrate NH_4NO_3.

$$3NH_4NO_3 + CH_3OH \rightarrow 8H_2O + N_2 + CO_2$$

With operation, impurities build up in the salt. This necessitates draining off a portion of the sodium carbonate with impurities and replacing it with fresh sodium carbonate. The ash may be 80% sodium carbonate, with the residual being uranium and impurities as they came from the mill. Alkaline-leach uranium mills use sodium carbonate to leach uranium ores, and the cost of sodium carbonate is a significant expense in operating this type of mill. Using this disposal option, the waste sodium carbonate with uranium and its impurities from the solvent extraction-fluorination facility can be used as the chemical feed sodium carbonate required by uranium mills. In effect, uranium impurities are returned to the mill and the uranium is recovered.

This type of molten-salt incinerator can be used to burn combustible solvents, paper, and other wastes. Thus, with this option, all combustible wastes from the solvent extraction-fluorination facility would be sent to the incinerator.

3.4.4 Waste Generation

Wastes from solvent extraction-fluorination plants can be categorized by volume or by radionuclide contents. The volume of wastes depends upon the details of waste processing; however, the radionuclide contents depend only upon the uranium feed to the facility. The wastes discussed here are characterized by both approaches.

3.4.4.1 Radwaste composition

Yellowcake from uranium mills is carefully analyzed by all UF_6 conversion facilities to detect impurities that cause operating problems and to determine the fee for conversion of yellowcake to UF_6. Table 3.15 shows the quantities of radionuclides entering and leaving a typical solvent extraction-fluorination facility. Three facts stand out. First, about 99.97% of the uranium entering the plant leaves as product UF_6. Second, 99.999% of all other radionuclides leave the facility in the solvent extraction raffinate. Third, of the uranium lost in the facility, >90% is in the solvent extraction raffinate, with most of the remaining losses due to the creation of dust in handling operations.

Table 3.15. Radionuclide balance of process streams for a solvent extraction/fluorination facility

Process streams	Uranium (kg/year)	Radionuclides[a], Ci/year			
		$^{238,234}U$	^{234}Th, ^{234m}Pa	^{230}Th	^{226}Ra, ^{222}Rn, ^{218}Po, ^{214}Pb, ^{214}Bi, ^{214}Po (each)
Feed[b]	1.00E7	3.3333E3	3.3333E3	2.80E1	2.00E0
Product[c]	9.997E6	3.3323E3	3.3323E3		
Liquid wastes					
Solvent extraction raffinate[c]	2.27E3	7.57E-1	1.67E3	2.80E1	2.00E0
Solvent treatment wastes[c]	2.73E2	9.10E-2			
Chemwastes[d]	2.79E2	9.30E-2	9.30E-2	7.00E-5	4.50E-6
Subtotal	2.82E3	9.41E-1	1.67E3	2.80E1	2.00E0
Liquid releases[e]	1.13E-2	3.78E-6	2.18E-6	3.21E-8	2.30E-11
Gaseous releases[f]	1.36E2	4.51E-2	3.18E-2	3.58E-4	1.07E-5

[a] ^{234}Th and ^{234m}Pa are short-lived daughter products of ^{238}U. The conversion process separates ^{238}U from daughter products and daughter products grow back in and, within 6 months, will be in equilibrium with ^{238}U.

[b] Average feed composition based on uranium from mills.

[c] These two liquid streams contain nearly all the radwaste and are the primary input into whatever radwaste treatment system is chosen for any plant; ^{234}Th and ^{234m}Pa levels before decay.

[d] CaF_2 solids from treatment of scrubber wastes.

[e] Total liquids release.

[f] Total gaseous release.

3.4.4.2 Volume of solid wastes generated

The volume of radwastes generated depend primarily upon how the solvent extraction raffinate stream is treated. About 83 m^3 (four hundred 55-gal drums) of contaminated (8.3×10^{-3} m^3/ton uranium) trash generated yearly;[3] however, this is not the major waste stream in volume or radionuclide content.

The number of impurities that enter with the yellowcake provide an estimate of the minimum possible wastes that theoretically could be generated.

The actual volume of solid wastes generated is determined by the choice of treatment method chosen for the solvent extraction raffinate stream. Table 3.16 summarizes the solid waste streams leaving a solvent extraction-fluorination plant with various treatment options. The radionuclide concentration of each stream is given for comparison with the average radionuclide content of the earth's crust (to determine whether a waste is to be considered radioactive). Molten-salt incineration produces the least solid waste (essentially none) by definition, since the waste created is considered a chemical feed to alkaline-leach uranium mills.

3.4.4.3 Current practice

At the only existing UF_6 conversion facility in the United States[9,10] using the solvent extraction-fluorination process, two different practices are being used for waste raffinate disposal. Based on the results of these operations, either, both, or a new process may be used for waste disposal. The state and federal regulatory agencies are allowing limited use of the deep-well waste injection system associated with the facility. Simultaneously, some of the raffinate is being treated with barium salts and other materials to precipitate the hazardous radionuclides and chemicals. This allows the ammonium nitrate liquid waste to be used as fertilizers on controlled plots of land.

3.4.5 Recommended Flowsheets

The recommended flowsheet, shown in Fig. 3.2, is based on the raffinate treatment in which the hazardous materials are precipitated and the remaining ammonium nitrate is used as a fertilizer. If operational experience at the existing facility is good, this may be the preferred route.

Table 3.16. Estimates of solid wastes produced by solvent extraction/fluorination plant[a]

Treatment method	Waste type	Total waste mass (t/year)	Waste density[b] (g/cm^3)	Waste volume (m^3)	Volume of wastes per ton U feed (m^3/ton)	Average radionuclide composition, μCi/g		
						^{238}U, ^{234}Th, ^{234m}Pa, ^{234}U (each)	^{230}Th	^{226}Ra, ^{222}Rn, ^{218}Po, ^{214}Pb, ^{214}Bi, ^{214}Po (each)
	Earth's crust[c]					1.00E-6	1.0E-6	1.0E-6
Case 1: NH_3 neutralization	Radwaste[d]	430				1.93E-3	6.5E-2	4.2E-3
	Chemwaste[e]	600	1.6	3.75E2	3.75E-2	9.45E-5	1.3E-8	9.4E-12
Case 2: $Ca(OH)_2$ neutralization	Radwaste[f]	1190	2.0	5.95E2	5.95E-2	6.10E-4	2.4E-2	1.7E-3
	Chemwaste[e]	600	1.6	3.75E2	3.75E-2	1.80E-4	1.3E-7	8.5E-9
Case 3: Sulfuric acid digestion	Radwaste[g]		2.0					
	Chemwaste[e]	600	1.6	3.75E2	3.75E-2	9.40E-5	1.3E-8	9.4E-12
Case 4: Molten-salt incineration	Radwaste[h]	0	2.5	0.00	0.00			
	Chemwaste[e]	600	1.6	3.75E2	3.75E-2	9.40E-5	1.3E-8	9.4E-12

[a]Operating at 10,000 t/year capacity.
[b]Density of pure CaF_2 = 3.18 g/cm^3; assumed packed density = 1.6 g/cm^3 (50% of theoretical). Density of $CaSO_4 \cdot 2H_2O$ (gypsum) = 2.32 g/cm^3; packs well to yield density = 2.0 g/cm^3. Density of sodium carbonate = 2.5 g/cm^3; density 2.5 g/cm^3 because poured into container in molten state. Density of $CaCO_3$ = 2.7 g/cm^3; 2.0 g/cm^3 when packed.
[c]Average composition of earth's crust.
[d]Sludge on bottom of lagoon.
[e]CaF_2 from scrubber liquor treatment.
[f]Sludge precipitate.
[g]Primarily $CaSO_4 \cdot 2H_2O$ (gypsum).
[h]Not waste; sent to uranium mill; primarily sodium carbonate.

3.5 REFERENCES

1. M. B. Sears et al., Correlations of Radioactive Waste Treatment Costs and the Environmental Impact of Waste Effluents in the Nuclear Fuel Cycle — Conversion of Yellowcake to Uranium Hexafluoride. Part I: The Fluorination/Fractionation Process, ORNL/NUREG/TM-7 (Sept. 1977).

2. M. B. Sears et al., Correlations of Radioactive Waste Treatment Costs and the Environmental Impact of Waste Effluents in the Nuclear Fuel Cycle — Conversion of Yellowcake to Uranium Hexafluoride. Part II: The Solvent Extraction-Fluorination Process, ORNL/NUREG/TM-7-P2, NUREG/CR-0708 (Feb. 1979).

3. Allied Chemical Corporation, Uranium Hexafluoride Facility Supplemental Report in Support of Application for Renewal of Source Materials License SUB-526, Docket 40-3392 (Jan. 1975).

4. Eldorado Nuclear Limited, The Port Granby Project: Environmental Impact.

5. S. J. Yosim et al., "Disposal of Hazardous Wastes by Molten-Salt Combustion," presented at the American Chemical Society's Symposium on Ultimate Disposal of Hazardous Wastes, Honolulu, Hawaii, April 1979.

6. D. E. McKenzie, R. B. Paulson, and L. F. Granthan, "The Volume Reduction of Solid Alpha-Bearing Waste by Molten-Salt Combustion," presented at OECD Conference on Management of Radioactive Wastes, Paris, December 1977.

7. K. M. Barclay et al., Notes on "Disposal of Simulated Intermediate-Level Radioactive Waste by Molten-Salt Combustion," Rockwell International Corp. (April 1979).

8. Private correspondence, Dr. D. E. McKenzie, Rockwell International Energy Systems Group, 8900 DeSoto Avenue, Canoga Park, California.

9. Private correspondence, N. E. Hinkle, Oak Ridge National Laboratory, Oak Ridge, Tennessee.

10. Kerr-McGee Nuclear Corporation, Sequoyah Facility License Renewal Application, License Sub-1010, Docket No. 40-8027 (Sept. 1982).

4. URANIUM ENRICHMENT

C. W. Forsberg

4.1 SUMMARY

Most nuclear reactors require fuel enriched in ^{235}U. Naturally occurring uranium contains only 0.711% ^{235}U, while LWR reactors require uranium with 2 to 4% ^{235}U. This necessitates isotopically separating the ^{235}U from ^{238}U. Two separations processes, gaseous diffusion and gas centrifuge, are currently used commercially. Both processes use physical means for separation, so there is no change in the chemical form of the uranium, UF_6. This chapter describes the wastes from these operations, including tails and uranium releases. Figure 4.1 and Table 4.1 summarize the process streams in a gaseous diffusion uranium enrichment plant, while Fig. 4.2 and Table 4.2 present information for gas centrifuge operations.

The capacity of uranium isotopic separation plants is measured by separative work units, SWU. The SWUs required to make a batch of fuel depends upon product, feed, and tails assay. This chapter will discuss waste measurements on the basis of waste per SWU.

The feed to the uranium enrichment plant is natural uranium containing 0.711% ^{235}U. The plant divides this uranium into two streams, one rich in ^{235}U and one depleted in ^{235}U. Typically, the enriched stream may contain 3.0% ^{235}U, while the depleted stream has 0.25%. Thus, 1 kg of natural uranium would yield 0.1676 kg of enriched ^{235}U and 0.8324 kg of depleted ^{235}U. The enriched uranium is sent to fuel fabrication, and the uranium tails are stored as UF_6 in cylinders at the enrichment plant. The weight of the uranium tails is typically about five times the weight of the product.

The tails may or may not be classified as waste. Currently, the United States has a once-through fuel cycle and under such conditions, the tails are a waste stream. They could be classified as a fuel, however, if some type of breeder reactor were in use.

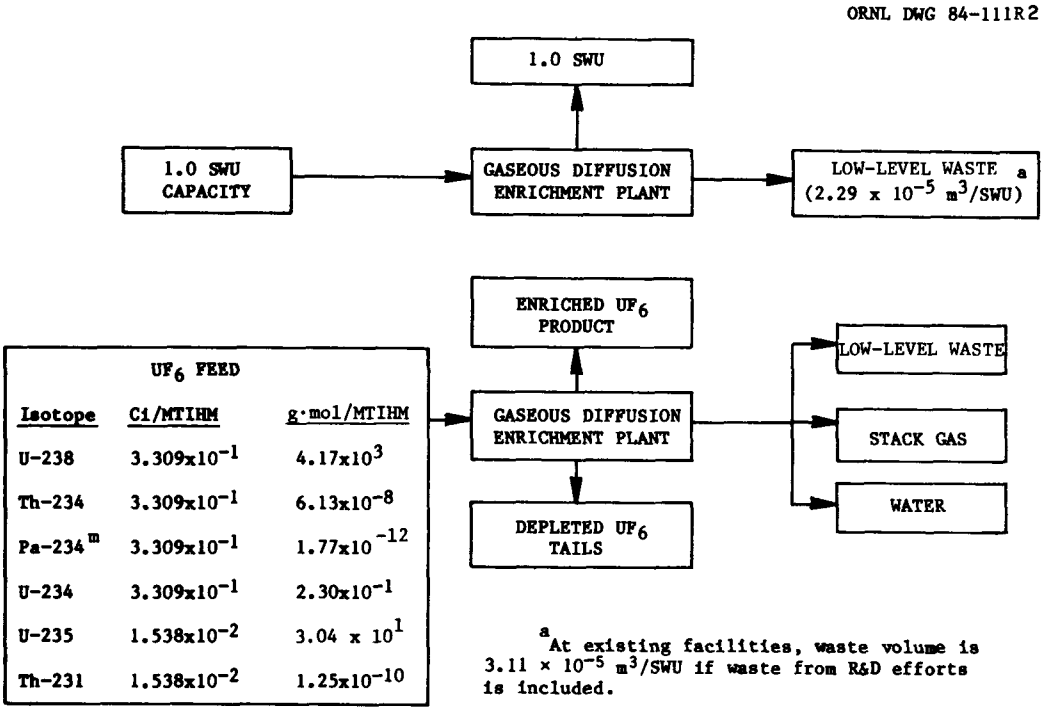

Fig. 4.1. Principal waste and product streams from a gaseous diffusion uranium enrichment plant.

Table 4.1. Fractional distribution of uranium and other elements in exit process streams of a gaseous diffusion uranium enrichment plant

	Waste streams			Product and tails streams
Element	LLW	Water releases	Atmospheric releases	Uranium (UF_6)
Uranium	4.74E-5	6.1E-6	1.4E-6	9.9994E-1
Other	9.97E-1	2.0E-3	1.0E-3	0.0

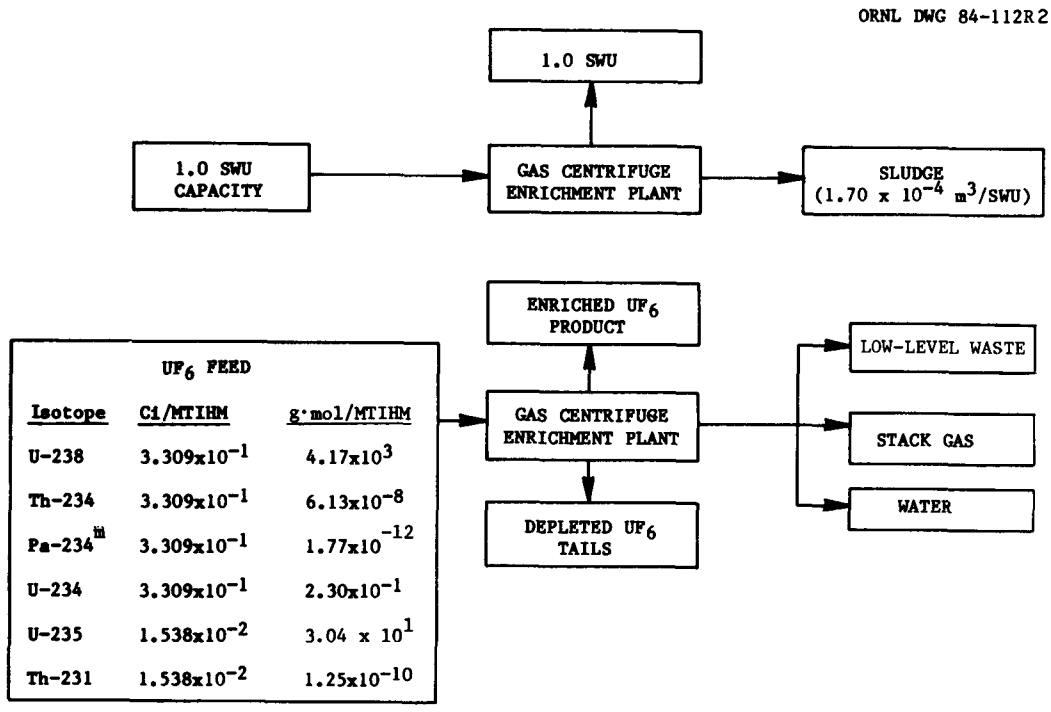

Fig. 4.2. Principal waste and product streams from a gas centrifuge uranium enrichment plant.

Table 4.2. Fractional distribution of uranium and other elements in exit process streams of a gas centrifuge uranium enrichment plant

	Waste streams			Product and tails streams
Element	LLW	Water releases	Atmospheric releases	Uranium (UF_6)
Uranium	9.54E-5	5.8E-7	1.7E-6	9.9994E-1
Other	9.77E-1	5.9E-3	1.7E-2	0.0

4.2 GASEOUS DIFFUSION FACILITIES

The major method of uranium isotopic separation in the United States today is gaseous diffusion. It accounts for more than 99% of current U.S. enrichment capacity, although future plants may use the gas centrifuge process or the atomic vapor laser isotopic separation process. Gaseous diffusion operates on the principle of molecular effusion, using UF_6 in the gaseous state. No chemical reactions occur in the process; hence this step of the fuel cycle produces less radioactive wastes than any other process step.

The data reported in this section are based on the experience of the Portsmouth Gaseous Diffusion Plant. This is one of the newer gaseous diffusion plants. Environmental impact statements for a proposed, but never built, gaseous diffusion add-on plant at this site contain the most complete public information on current operations of the existing plant.[1]

4.2.1 The Gaseous Diffusion Process

The gaseous diffusion process depends upon the physical phenomenon known as molecular effusion. Uranium as UF_6 gas flows into porous tubes where half the gas exits the other end of the tubes, while the other half flows through the walls of the porous tubes to a low-pressure region outside. The $^{235}UF_6$ molecules weigh less than the $^{238}UF_6$ molecules and hence travel faster in the gaseous phase. Because of this higher velocity, the $^{235}UF_6$ molecules will on the average strike the barrier tube more often while traveling the length of the tube and thus have a higher probability of going through a hole in the barrier. As a consequence, the low-pressure gas outside the tubes is enriched in $^{235}UF_6$, and the gas exiting the tubes is depleted in $^{235}UF_6$.

This separation process provides very little separation per stage, so the process must be repeated about 1200 times in series to obtain the appropriate uranium enrichment. Between each separation stage, the low-pressure gas must be compressed to the operating pressure of the next stage. Because the separation is a physical process using pure UF_6, no radioactive wastes are generated during operation. The only wastes generated are a result of impurities in the process, plant maintenance, and decommissioning.

4.2.2 Radioactive Waste Generation by Gaseous Diffusion

Figure 4.3 shows the general flows of radioactive wastes in a gaseous diffusion plant. The main process generates no wastes directly; all wastes are generated by auxiliary functions.

Gaseous diffusion plants operate at a negative air pressure for safety. As a consequence of this, there is some leakage into the system via compressor seals and other routes. Gaseous impurities are removed from the main cascade by two gaseous diffusion purge cascades and vented to the atmosphere through a combination of NaF and alumina traps. These solid-bed traps remove residual UF_6 so only traces will escape the plant. The alumina and NaF chemical traps are periodically replaced and sent to the process facilities for uranium recovery and then to low-level radioactive waste burial. If the alumina has sufficiently low uranium content, it may be sent directly to burial. It is estimated that 3,600 kg of these wastes are generated yearly. On the average, the alumina contains 3 to 10 wt% uranium when the chemical traps are changed. About 75% of this uranium is recovered.

Plant maintenance is the major source of radioactive waste generation. Equipment to be removed from the cascade is first purged of UF_6, then decontaminated before maintenance work begins. Decontamination procedures involve washing the equipment with water, nitric acid, and various other cleaning agents. Decontamination solutions with significant amounts of uranium are sent to uranium recovery while the other waste streams are disposed of as listed in Table 4.3. As seen in Table 4.3, most of the uranium wastes are from cylinder-cleaning operations. This uranium is in a highly dilute form.

The radiochemical wastes are treated in three facilities: the incinerator, the uranium recovery facility, and the holding pond. The incinerator processes about 23,000 kg per year of combustible wastes. The ash from this treatment process is sent to uranium recovery.

All process solutions from decontamination operations that contain significant amounts of uranium are sent to the uranium recovery facility. This is essentially a small uranium mill combined with a small UF_6 conversion facility. The uranium solutions are concentrated by evaporation, purified by solvent extraction, further concentrated,

ORNL DWG 84-113

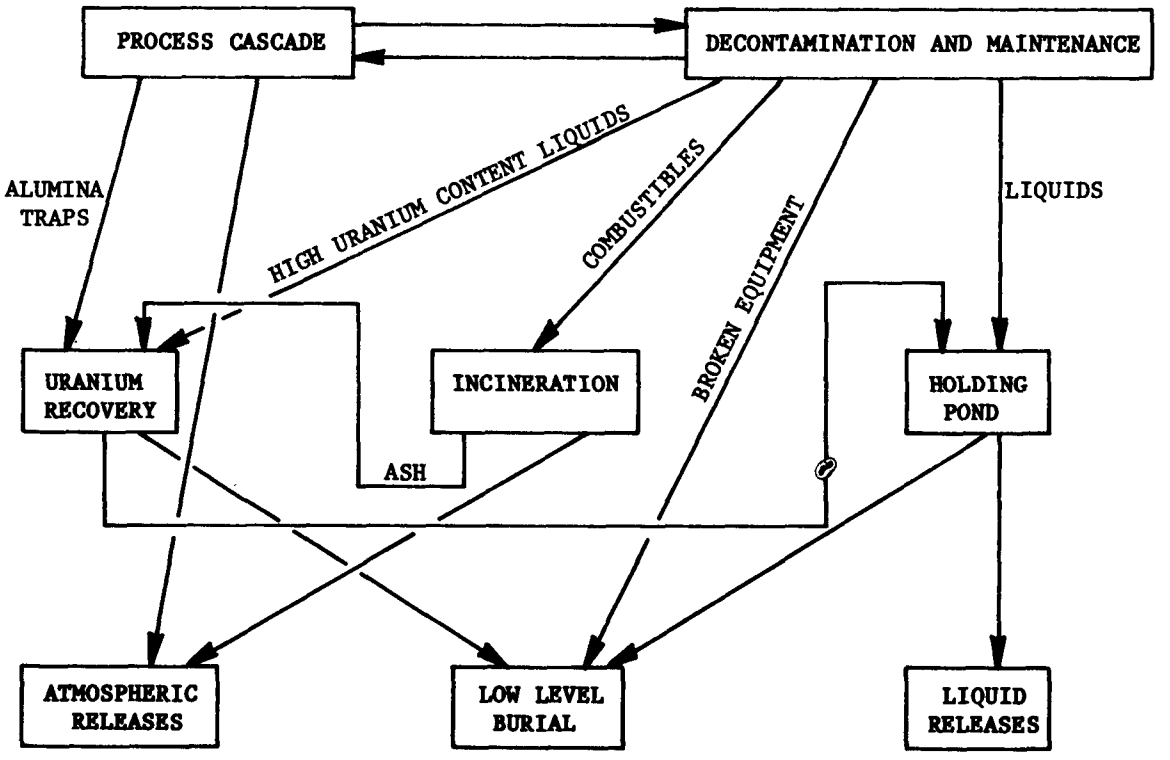

Fig. 4.3. Radioactive waste flows at a gaseous diffusion plant.

Table 4.3. Wastes from gaseous diffusion plant maintenance facilities (excluding wastes to uranium recovery)

Process	Waste form	Concentration	Yearly discharge	Discharge point
Cylinder cleaning	Water, boric acid, uranium	Variable	~400 kg U	Holding pond
Decontamination spray booth	Final rinse water	1-2 ppm U	2270 m^3 solution	Holding pond
Laundry	Soap, water		~10 kg U	Sewage treatment plant
Maintenance	U-contaminated scrap metal		300 55-gal drums	Burial ground
Laboratory			~900 kg U	Holding pond

dried, calcined, and converted to UF_6. The UF_6 is reinjected into the cascade. Table 4.4 summarizes the waste streams from this operation.

The final radioactive waste processing facility is the holding pond. All waste streams that could contain uranium are sent to this facility. The wastes are neutralized to pH 7.0 with $Ca(OH)_2$, which precipitates most heavy metals. The water from this holding pond is sent for chromate removal before release to the environment; however, the chromate removal facility is not considered part of the radiochemical removal system.

A mass balance of materials entering and leaving the Portsmouth Gaseous Diffusion Plant holding pond annually is shown in Table 4.5. About 141.6 m^3 of sludge are accumulated per year. Table 4.6 shows an analysis of the sludge ponds at both the Portsmouth and Oak Ridge gaseous diffusion plants. The differences in composition are due to differences in operations with respect to (1) excess $Ca(OH)_2$ added by Oak Ridge and (2) the miscellaneous streams sent to the holding pond at each facility.

4.2.3 Gaseous Diffusion Radioactive Waste Disposal

All radwastes from gaseous diffusion are disposed of in one of four locations: water, the atmosphere, the regular burial ground, and the classified burial ground. The two burial grounds will be treated as one; however, detailed estimates of buried classified material have not been made public.

Liquid releases are from two plant locations. About 10 kg of uranium per year with short-term daughter products exits via the sewage treatment plant. This is from laundry operations (Table 4.3). The remainder of the liquid radwaste exits from the holding pond. The composition and quantity of liquid effluent from the holding pond is shown in Table 4.7.

Table 4.8 shows the estimated maximum annual gaseous releases of radwaste from the Portsmouth Gaseous Diffusion Plant. No accurate analytical techniques exist to measure such low releases. During the lifetime of a gaseous diffusion plant, one or two accidents involving a break of the UF_6 lines must be considered probable. In such a case, the accident releases determine the total plant releases to the atmosphere.

Table 4.4. Waste streams from uranium recovery operations at a gaseous diffusion plant

Process stream	Chemical species	Concentration	Yearly discharge	Discharge point
Pre-evaporator	Uranium	<1 ppm U	470 m^3	Holding pond
Solvent extraction raffinate	Uranium	~7 ppm	68 m^3 (160 g U)	Holding pond
Post-evaporation	Uranium	3-10 ppm	250 m^3	Holding pond
Oxide conversion	NaF		1360 kg	Burial ground

Table 4.5. Holding pond material balance for Portsmouth Gaseous Diffusion Plant

Species	Quantity entering (g/year)	Quantity leaving (g/year)	Percentage removed
Uranium	4.0E5	7.0E4	80%
Thorium-234	4.3E-5	7.6E-6	80%
Protactinium-234m	1.4E-9	2.5E-10	80%
Fluorides	Undetermined	2.9E6	Undetermined
Nitrates (NO_3^-)	9.16E7	9.16E7	0%

Table 4.6. Gaseous diffusion plant holding pond sludge composition[a,b,c]

Species	Portsmouth (wt %)	Oak Ridge (wt %)
Aluminum	>10	1.35
Calcium	4	34.95
Chloride		0.5
Chromium	0.2	0.003
Copper	0.6	0.006
Iron	3	
Lead	0.01	0.005
Magnesium	2	
Manganese	0.02	0.015
Molybdenum	0.003	
Nickel	0.06	0.002
Phosphate		0.15
Potassium		0.197
Silicon	>10	
Silver	0.001	
Sodium	0.3	
Sulfate		0.7
Tin	0.03	
Titanium	1	
Uranium	0.18[d]	(200 μg/ml wt)
Vanadium	0.01	
Zinc	0.1	0.006
Zirconium	0.005	

[a]Calculated on a dry basis from 1974 and 1975 data.
[b]Characteristics of Oak Ridge holding pond: pH = 9.85; conductivity (micromhos) = 192; solids (wt %) = 9.8; solid specific gravity = 3.2; and mean particle size (μ) = 3.4.
[c]Refs. 1 and 2 of this Chapter.
[d]Calculated from predicted operating conditions.

Table 4.7. Analysis of gaseous diffusion plant holding pond effluent[a,b]

Chemical species	Average, ppm
Total phosphate	0.7
Total chromium (VI)	<0.02
Zinc	0.1
Iron	0.1
Aluminum	6.6
Chloride	67
Nitrate	2,300[c]
Sulfate	184
Fluoride	72[b]
Uranium	1.8[c]
pH	7.1

[a]Data represent averages of continuous sampling from 8/12/74 to 10/21/74.
[b]Estimated from operating data and predicted uranium recovery rates.
[c]Annual release rate = 4.0×10^7 kg/year.

Table 4.8. Estimated maximum annual releases of gaseous radioactive wastes at a gaseous diffusion plant

Radionuclide	Release rate (g/year)	Annual emission[a] (Ci/year)
U-234	9.2	5.678×10^{-2}
U-235	965.2	2.491×10^{-3}
U-236	1.5	9.48×10^{-5}
U-238	15,405.3	5.121×10^{-3}
Th-234	<<0.1	7.502×10^{-2}
Pa-234m	<<0.1	7.502×10^{-2}

[a]No accurate analytical methods exist to measure such low releases.

Solid radwaste production per year is given in Table 4.9. As seen, holding pond sludge is the predominant source term by volume and kilograms of uranium and uranium daughter product. All of the currently operating gaseous diffusion plants have other types of facilities associated with them; hence, significant uncertainty exists in many cases on how to proportion the waste volumes according to plant operations. Based on present calculation methods, the gaseous diffusion plant solid wastes are 2.29×10^{-5} m^3/SWU. Actual waste production at the facilities, including waste from large research programs on advanced isotopic separation methods, is 3.11×10^{-5} m^3/SWU. The research programs account for the difference.[3]

A simple block diagram of the facility is shown in Fig. 4.1. To relate separative work units to kilograms of feed, it was assumed that 0.79 SWU was needed for every kilogram of uranium fuel to the plant. This number is based on the following assumptions: two-thirds of feed to plant for PWR fuel, one-third of feed to plant for BWR fuel, tails assay is 0.2%, PWR product assay is 3.2% and BWR product assay is 2.7%. This implies that each plant processes 11,400 t of uranium per year.

4.3 GAS CENTRIFUGE FACILITIES

All currently operating uranium enrichment plants in the United States use the gaseous diffusion process; however, the new commercial facilities under construction are based on the gas centrifuge process. The gas centrifuge process has capital costs slightly higher than those for gaseous diffusion, but it uses only 5% as much electricity. With the increasing cost of electrical power, it is expected that the gas centrifuge may become the predominant method of isotopic separation. However, since no commercial gas centrifuge facility currently exists in the United States, the estimates on waste volumes presented here are inherently uncertain.

4.3.1 Gas Centrifuge Process

In the gas centrifuge process, gaseous UF_6 is sent through high-speed centrifuges where the heavier $^{238}UF_6$ settles to the walls of the centrifuge and the lighter $^{235}UF_6$ to the centrifuge center. A number of centrifuges in series are needed to obtain reactor-grade uranium. The

Table 4.9. Annual solid radwaste production at Portsmouth Gaseous Diffusion Plant

Waste type	Volume (m^3)	Volume (m^3/SWU)[a]	Uranium content (kg)
Sludge[b]	141.6	1.57E-5	~330
Solid wastes			
Alumina[c]	1.78	2.00E-7	~210
Maintenance operations	62.3	6.92E-6	
Lab sludge trap	0.85	9.40E-8	
Total	206.5	2.29E-5	540

[a]Assumed plant production = 9×10^6 SWU. Waste production only partially dependent upon production levels.

[b]Sludge will probably be solidified; assume final volume identical since sludge is primarily water, some of which can be removed in solidification operations.

[c]Alumina density assumed to be 3.99 g/cm^3 (this includes void fraction) which is 50% of theoretical density.

output per centrifuge is low, therefore tens of thousands of machines are required for a large facility.

A technical characteristic of the gas centrifuge important with respect to waste management is that the separative capacity of a machine increases by greater than the square of the outer velocity of the centrifuge. As a consequence, the economics improve rapidly with higher-speed machines. From an economic standpoint, the optimum production method is to operate the machine at the very edge of its capability, even though on the average each centrifuge will fail every few years. The outer casings of the machines are designed to withstand these catastrophic failures. The machines are rebuilt after failure, but this rebuilding process and the high maintenance directly and indirectly associated with it may generate >99% of the wastes of this fuel cycle step.

4.3.2 Waste Generation and Treatment in a Gas Centrifuge Plant

The flow of wastes in a gas centrifuge plant is shown in Fig. 4.4. Failed components of the centrifuge plant are sent to maintenance, where equipment is decontaminated, repaired, and returned to service. Since decontamination is not perfect, there is a significant flow of uranium as a contaminant on machine parts between the plant and maintenance shops.

The centrifuge plant generates only one significant form of waste directly: contaminated alumina. The high-speed machines operate in a vacuum maintained by a high-vacuum system. Some UF_6 enters this system, is removed by the vacuum pumps and is trapped on alumina beds. The alumina beds are sent for uranium recovery and then to solid disposal. An estimated 204 t per year of alumina are consumed in this way.

The machine maintenance facility generates a variety of wastes. Table 4.10 lists the annual tonnage of various solid wastes generated by an 8.75×10^6 SWU facility. These waste projections are based upon material flows through maintenance. The wastes are sent either to burial or to the smelter for metal decontamination. Liquid wastes from uranium decontamination operations are sent to the uranium recovery facility. Combustible wastes such as towels, clothing, and blotter paper are sent to the incinerator, with ash going to uranium recovery.

ORNL DWG 84-114R

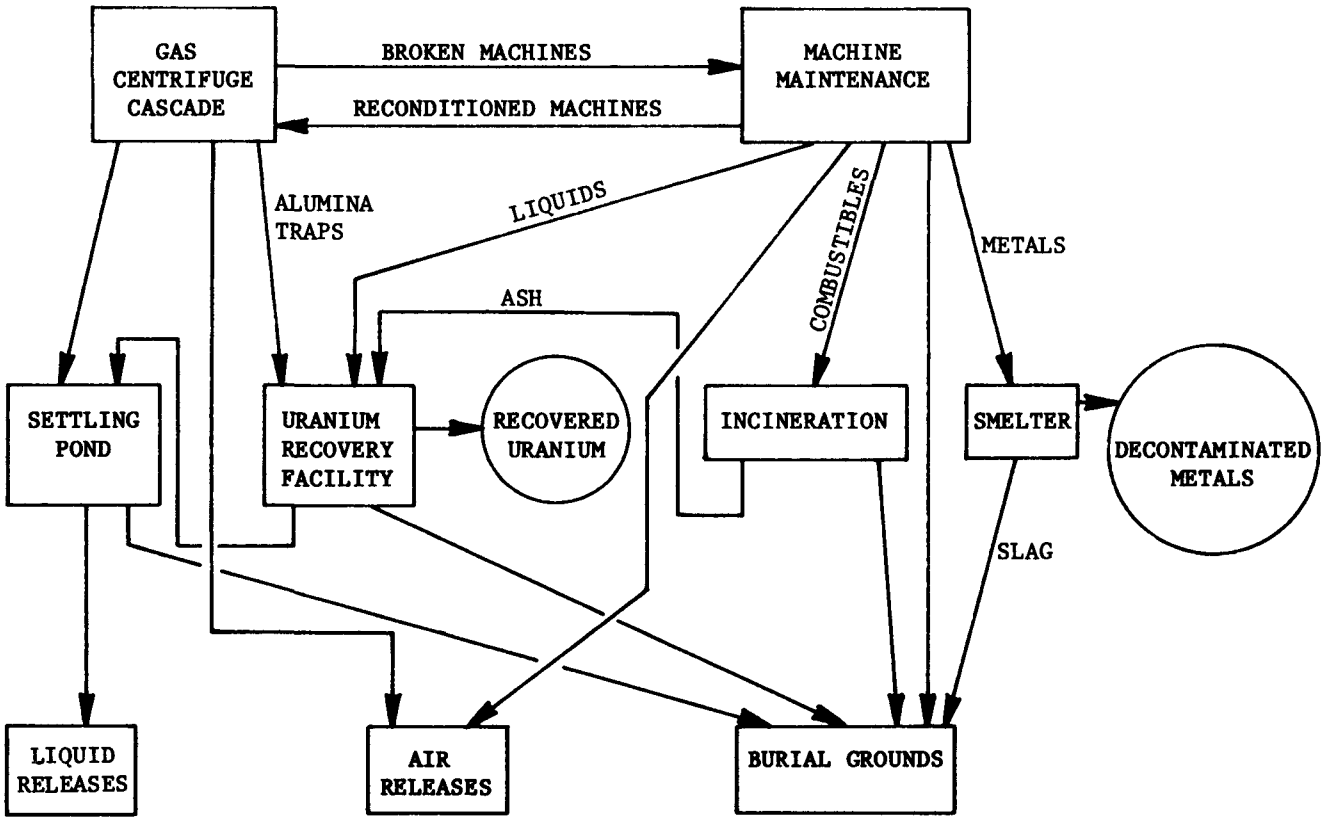

Fig. 4.4. Radioactive waste flows for a gas centrifuge uranium enrichment plant.

Table 4.10. Estimated annual solid waste production by maintenance operations for a gas centrifuge uranium enrichment plant[a]

Material	Waste quantity generated (t/year)	Disposition	Smelter slag generated/ton scrap treated[b]	Smelter slag (t/year)	Wastes to burial ground (t/year)	Wastes per SWU (t/SWU)
Steel	951.5	Smelter	0.1	95.1	95.1	1.087E-5
Aluminum	699.0	Burial			699.0	7.989E-5
Iron	2.5	Smelter	0.1	0.3	0.3	0.003E-5
Brass	11.7	Smelter	0.1	1.2	1.2	0.013E-5
Alnico V	35.9	Smelter	0.1	3.6	3.6	0.041E-5
Plastic	5.6	Burial			5.6	0.064E-5
Rotor material	1650.5	Burial			1650.5	18.863E-5
Total	3356.7			100.2	2455.3	2.806E-4

[a]Operating capacity is assumed to be 8.75E6 SWU per year.

[b]Smelting operations totally decontaminate most metal wastes, with the uranium remaining in the slag that becomes low-level waste. Smelting does not decontaminate aluminum, since uranium preferentially remains in aluminum, rather than in the oxide slag.

Note that these waste flows are all projections, since no commercial facilities currently exist in the United States.

The smelter is one of four waste treatment facilities required by the gas centrifuge process. Metal decontamination by smelting and fluxing are assumed to be identical to those operations used to decommission gaseous diffusion facilities. It is also assumed that 0.1 kg of low-level waste (LLW) slag is generated per kilogram of metal decontaminated. No industrially proven aluminum decontamination procedure is known to exist (uranium does not transfer from molten aluminum batch to oxide slag, since the aluminum oxidizes before the uranium).

The incinerator will handle all combustible wastes. No estimates of waste tonnages or volumes now exist. The quantities of ash should be small compared to the wastes from maintenance and smelter operations.

The uranium recovery facility will remove economically recoverable quantities of uranium from various aqueous decontamination streams and will leach certain solids. It is, in effect, an in-plant uranium mill. Table 4.11 summarizes the liquid input and output of the facility.

The settling pond is the fourth waste treatment facility needed. All potentially contaminated streams are sent to this holding pond, where the aqueous streams are neutralized to a pH of 6 to 8. At this pH range, most radionuclides, including uranium, will precipitate. Table 4.12 gives data on the flows of liquids in and out of the settling pond.

4.3.3 Gas Centrifuge Waste Disposal

After treatment, all wastes are released to the atmosphere, the water, or the burial ground. Water releases are through the holding pond (Table 4.12 shows the expected chemical releases to the environment). Table 4.13 gives the corresponding radiochemical releases in this liquid effluent.

Table 4.14 presents the data on the calculated radioactivity releases to the atmosphere from a gas centrifuge plant. These releases are basically from small leaks and the minute quantities of materials that come through the various off-gas cleanup systems. As a practical matter, chemical releases are of greater concern, since many fluoride-containing gases are toxic.

Table 4.11. Effluents from gas centrifuge enrichment plant uranium recovery facility

Effluent	Effluent quantity (kg/week)	Effluent quantity (t/year)
Condensate[a]		
Water	56,000	2,900
Nitric acid	14	0.73
Uranium	Trace	Trace
Aluminum nitrate	Trace	Trace
Total condensate	~56,000	~2,900
Aqueous wastes[b]		
Water	8,700	450
Nitric acid	1,300	70
Aluminum nitrate	1,600	80
Fluoride	20	1
Uranium (20-ppm)	0.127	0.0066
Total aqueous wastes	~11,600	~600
Noncondensable off-gas[c]		
Nitric oxides	~38	2
Uranium oxide dust	Trace[d]	Trace[d]
Total off-gas	~38	~2

[a]Condensate from pre-evaporation flows into the facility

[b]Wastes sent to the holding pond from the solvent extraction, post-evaporation, and denitration process streams. Density = 1.19 kg/L.

[c]Off-gas from treatment operations.

[d]Scrubbing with concentrated HNO_3 will be necessary to avoid discharging UO_3 dust to the atmosphere.

Table 4.12. Liquid streams received by and discharged from the primary holding pond of a gas centrifuge uranium enrichment plant

	Decontamination and uranium recovery	Cooling tower blowdown	Water treatment backwash	Steam plant	Discharge to receiving water[a]
Flow, L/d	9,350	1,840,000	303,000	512,000	~2,880,000
Leading constituent, mg/L					
Nitrate[b]	41,000				130
Aluminum	3.07				1.0[c]
Fluorine	226				0.9
Uranium	1.53				0.005
Nitric acid	20,260				83.4
Aluminum nitrate	24,200				8
Tributylphosphate	30.6				0.2
Varsol	91.7				0.3
Phosphate		1.0		13.3[f]	2.8
Chlorine		0.3			*e*
Chromium		0.05			0.032
Zinc		0.5			0.32
Sulfate		*d*	*d*	~250	*e*
Chloride		*d*	*d*	~110	*e*
Suspended solids	*d*	*d*	*d*	~140	*e*
Dissolved solids	*d*	*d*	*d*	~900	*e*
pH	Neutralized	Neutralized	~7	Neutralized	Neutralized
Temperature, °C		29		*d*	*e*
Total wt solids, kg/d	802.7	3.404	2.121	723.6	653.64

[a]Total flow is rounded up to 2,880,000 L/d (760,000 gal/d) to account for items which are present in undetermined quantities, such as laboratories, roof and floor drains from process buildings, and miscellaneous items. Concentrations are based on the total dilution of the 2,880,000 L/d.

[b]These represent total equivalent values and are comprised of the aluminum nitrate and nitric acid in the effluent.

[c]Assuming 90% of the aluminum precipitated and settled out as hydroxides.

[d]Present in undetermined quantities.

[e]It is anticipated that federal, state, and local guidelines and regulations for effluents and receiving waters will be met.

[f]Based on a concentration of 30 ppm, PO_4 in the boiler blowdown. The blowdown is mixed with waste streams from the regeneration or zeolite units to obtain the total liquid effluent from the steam plant.

Table 4.13. Estimated annual radiochemical releases from the primary holding pond of a gas centrifuge enrichment plant

Isotope	Released radioactivity (Ci/year)
U-234	2.71E-3
U-235	1.02E-4
Th-231	1.02E-4
U-238	2.18E-3
Th-234	2.18E-3
Pa-234	2.18E-3
Total	9.45E-3

Table 4.14. Estimated annual radiochemical releases to the atmosphere from a gas centrifuge enrichment plant[a]

Isotope	Released radioactivity (Ci/year)
U-234	6.4E-3
U-235	1.5E-3
Th-231	1.5E-3
U-238	6.4E-3
Th-234	6.4E-3
Pa-234	6.4E-3
Total	2.86E-2

[a]Transuranic alpha specification = 1500 dis/min/g U.

Table 4.15 lists the mass and radioactivity of solid wastes sent to the burial grounds. A total of 3.4×10^{-4} t of solid, slightly radioactive wastes is generated per SWU. Density will vary according to the waste type. Aluminum, a primary waste, has a density of 2.7 g/cm^3. The rotor wastes are classified, but since it must be made of a strong, lightweight material, this suggests a bulk density of <2 g/cm^3. The slag wastes are primarily calcium oxide, with a density of ~3.3 g/cm^3; however, there may be considerable air trapped within the slag. Considering the above densities and imperfect packing, an average density of 2.0 g/cm^3 was chosen. This allows us to calculate an average of 1.7×10^{-4} m^3 of waste produced per SWU. Using the same ground rule assumptions applied to gaseous diffusion, the block flow diagram in Fig. 4.2 was created with a calculated 1.70×10^{-4} m^3 of wste per SWU.

Table 4.15. Solid wastes sent to burial ground from a gas centrifuge uranium enrichment plant[a]

Waste composition	Waste type: Centrifuge area aluminua	Waste type: Maintenance and smelter	Waste type: Holding pond sludge[b]	Total wastes	Wastes per SWU
Waste tonnage, t/year	203.9	2455.3	319.1	2978.3	3.4E-4[c]
Radionuclides, Ci/year					
U-235	1.17E-2	5.15E-3		1.685E-2	1.926E-9[d]
Th-231	1.17E-2	5.15E-3		1.685E-2	1.926E-9[d]
U-238	2.47E-1	1.10E-1		3.570E-1	4.080E-8[d]
Th-234	2.47E-1	1.10E-1		3.570E-1	4.080E-8[d]
Pa-234	2.47E-1	1.10E-1		3.570E-1	4.080E-8[d]
U-234	3.09E-1	1.36E-1		4.450E-1	5.085E-8[d]
				1.5497	1.77E-7

[a]Base case = 8.75E6 SWU/year; plant handles only natural uranium feed.
[b]Basis: all water removed.
[c]In units of metric ton/SWU.
[d]In units of Ci/SWU.

4.4 REFERENCES

1. Energy Research and Development Administration, Environmental Statement: Portsmouth Gaseous Diffusion Plant Expansion, ERDA-1549, Vol. 2 (September 1977).

2. C. P. McGinnis, "Solid Waste Disposal Study," Papers of the 1979 UCC-ND Waste Management Seminar, K/C-1347 (March 1979).

3. Letter to C. W. Forsberg from A. H. Kibbey, "Enrichment Plant LLW Generation," (March 12, 1981).

4. Energy Research and Development Administration, Final Environmental Statement: Expansion of the U.S. Uranium Enrichment Capacity, ERDA-1543 (April 1976).

5. FRESH-FUEL FABRICATION

W. L. Carter

5.1 SUMMARY

Projections of the quantities and characteristics of waste produced in fabrication of fresh fuel for light-water reactors (LWRs) are required in the Integrated Data Base (IDB) to assist in planning for waste treatment, transportation, and storage facilities. A study by Pechin et al.[1] to establish "as low as practicable" guides for the fabrication of enriched uranium fuel was the primary source of data concerning waste generation. The generation rate is based on the conventional ammonium diuranate (ADU) fabrication process, for which the principal waste streams are shown in Fig. 5.1. Fabrication plant feed is enriched uranium hexafluoride (UF_6), which contains negligible amounts of other elements. Table 5.1 gives the IDB recommended values for fractional distribution of the uranium isotopes that are present in feed material among the several waste streams and the product stream.

The waste generation rates shown in Fig. 5.1 are normalized for 1 metric ton of initial heavy metal (MTIHM) fed to the plant, and no allowance is made for volume reduction of any stream except for the incineration of combustible low-level waste (LLW). The waste streams shown in Fig. 5.1 are the only designed discharges from the plant. Water and gaseous releases are discharged continuously to the environment after they have been treated to meet environmental release criteria. Lagoon waste, which is primarily calcium fluoride from the UF_6 conversion, is held to allow solids (CaF_2) to settle, and eventually the solids are disposed of as chemical waste. Nitrate waste is collected and held in storage lagoons for eventual treatment to remove the nitrate content by calcination and anaerobic digestion. Trash and incinerator ash pose no particular environmental problems and are buried at licensed LLW facilities.

ORNL–DWG 83-492 R2

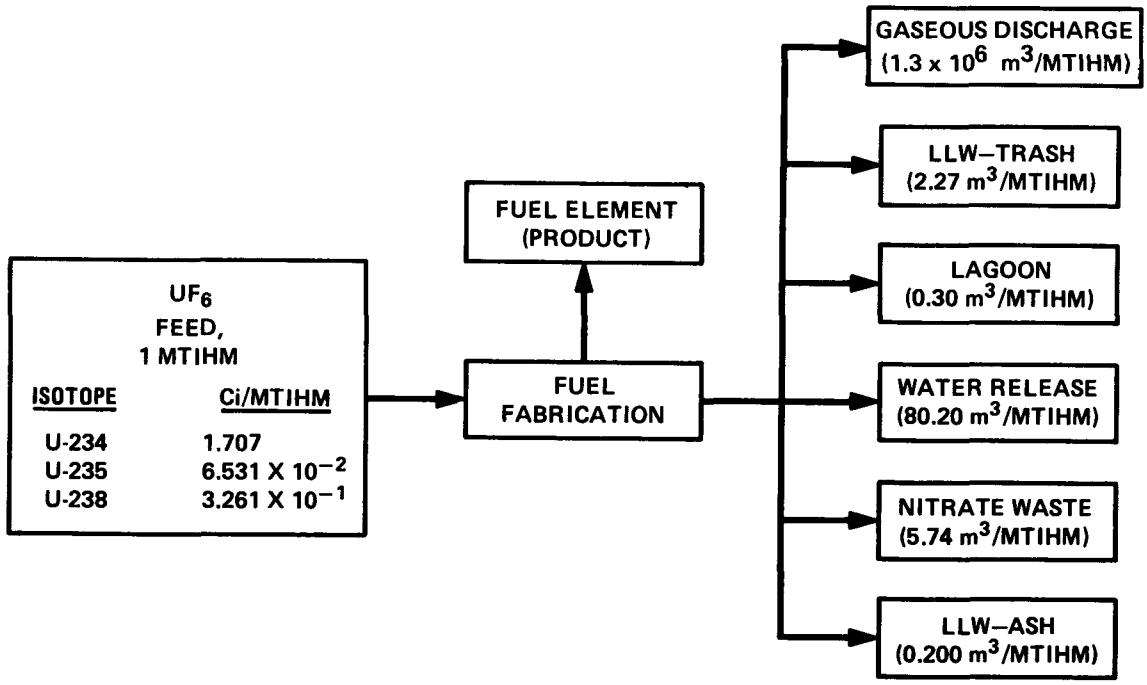

Fig. 5.1. Principal waste and product streams from a fresh fuel fabrication facility.

Table 5.1. Fractionation of uranium isotopes in feed among fuel fabrication plant wastes and products

UF_6 feed	Waste streams						Product stream
	Trash	Lagoon	Water releases	Nitrate wastes	Ash	Off-gas	(Fuel element)
All uranium isotopes	2.8E-3	9.6E-4	4.9E-4	1.1E-4	1.0E-6	1.6E-6	9.95637E-1

5.2 PROCESS DESCRIPTION

The principal operations[2] in the fabrication of fresh fuel for a LWR from enriched uranium are shown in Fig. 5.2. This figure illustrates a powder-pellet process, employing a sequence of chemical and mechanical steps.

5.2.1 Conversion

The conversion step of the fuel fabrication process transforms UF_6 into ADU. First, the UF_6 is hydrolized to form uranyl fluoride (UO_2F_2) which, in turn, is reacted with ammonium hydroxide to precipitate ammonium diuranate [$(NH_4)_2U_2O_7$]. The resulting ADU slurry is centrifuged to separate most of the uranium, and the clarified effluent is sent to waste treatment to recover additional uranium before the liquid is released to the environment. Gaseous waste, which contains entrained particles of uranium compounds and uranium decay products, is sent for off-gas treatment.

5.2.2 Calcination

Ammonium diuranate is thermally decomposed to uranium trioxide (UO_3), and the UO_3 is reduced with hydrogen to uranium dioxide (UO_2) powder at an elevated temperature. Ammonia gas, a byproduct in the decomposition of ADU, is recovered in aqueous off-gas scrubbers, and the scrubber liquid is combined with other waste streams for treatment.

5.2.3 Pellet Preparation

The UO_2 powder is milled to the required particle size, combined with binders, pore formers, and press lubricant, and pressed into cylindrical pellets. The pellets are sintered in a hydrogen atmosphere to create a high-density product that is ground to specified dimensions. Cover gas from these operations is filtered to recover UO_2 dust, which is sent to scrap recovery, along with pellets that do not meet specifications.

5.2.4 Fuel Rod and Fuel Assembly Fabrication

The sintered and ground metal oxide pellets are loaded into a Zircaloy tube that has been welded shut at one end. The necessary plenum adjustment is made, and a slight positive pressure of helium is

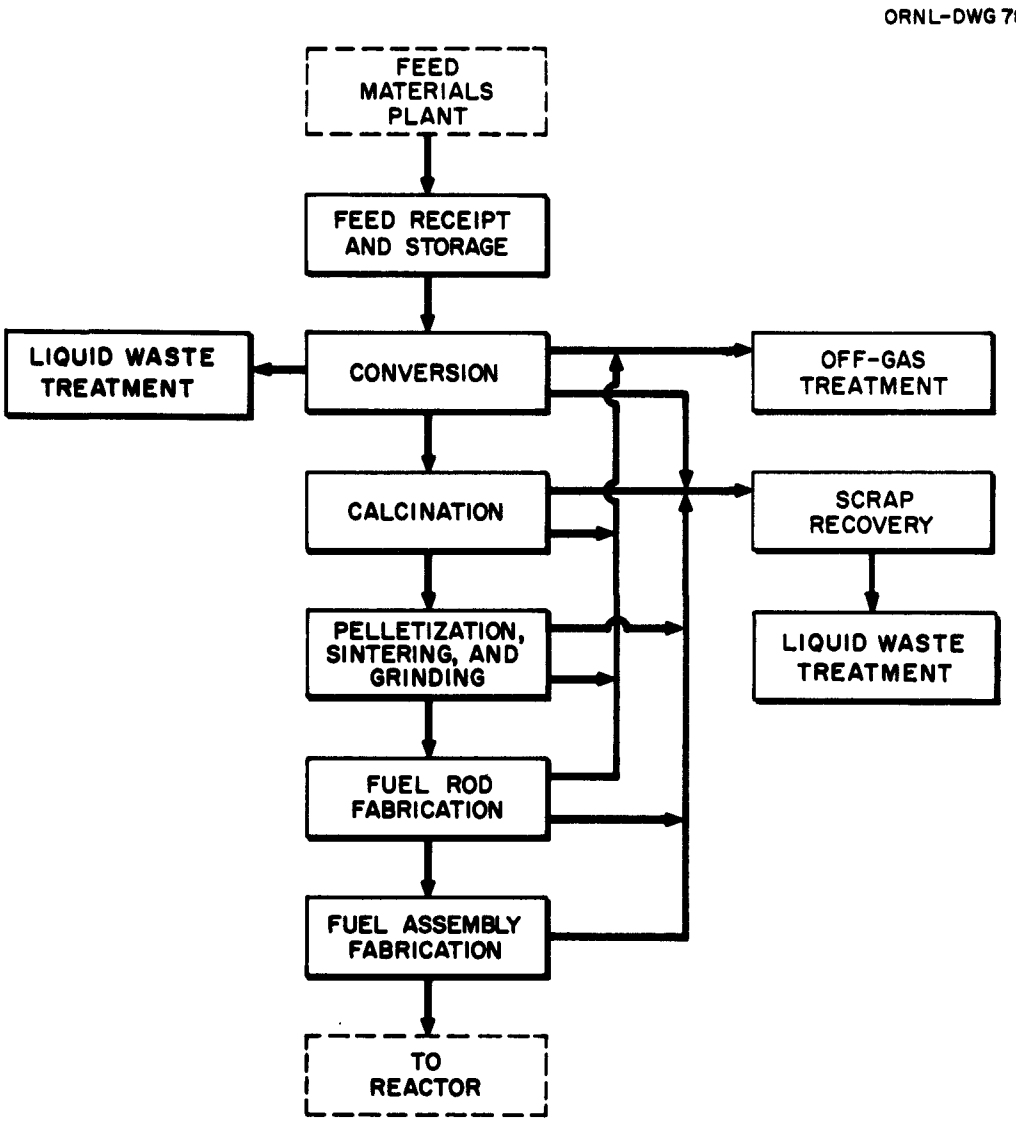

Fig. 5.2. Fuel fabrication by the conventional powder-pellet process.

applied before the tube is capped and welded shut. The appropriate number of fuel rods is loaded into an assemblage of spacer grids and control rod guides to form a square array. This assembly is then fitted with the appropriate end pieces to facilitate handling and securing in the reactor. Ventilation atmosphere from these operations is filtered to remove metal oxide dust and aerosols and then is released to the surroundings; other waste consists of discarded materials that are used in day-to-day operation.

5.3 WASTE STREAMS

The radioactivity of effluents from a fresh-fuel fabrication plant arises from the contained uranium and its decay products. All effluent streams are treated to recover the valuable uranium for recycle and to lower the radioactivity of plant discharges to environmentally acceptable levels. Waste treatment also recovers chemical reagents for recycle. Principal waste streams from the plant are shown in Fig. 5.3.

Liquid wastes contain uranium in solution as well as suspended oxide particles, and current practice is to provide retention time for coalescence and settling. After settling, relatively clear supernate is drained off and filtered. The bottom fraction, which is a liquid/solid slurry, is centrifuged for additional solids concentration; these solids are sent to scrap recovery to reclaim the uranium. Liquid from the centrifuge is filtered with the supernate from the settling operation.

Gaseous waste streams from process vessels are passed through water scrubbers and high-efficiency particulate air (HEPA) filters; the ventilation gas is passed through roughing filters and HEPA filters. Scrubber liquid is treated with other liquid waste streams, and spent filters are discarded with other solid wastes.

5.3.1 LLW Trash

The items that generally make up the LLW trash[2,3] at a fuel fabrication facility are given in Table 5.2. The combustible fraction of this trash may be ~85% of the total volume. Not all currently operating fabrication plants have incinerators to reduce the volume of solid waste, which must be packaged in drums or boxes and sent to a licensed

ORNL-DWG 73-6512R3

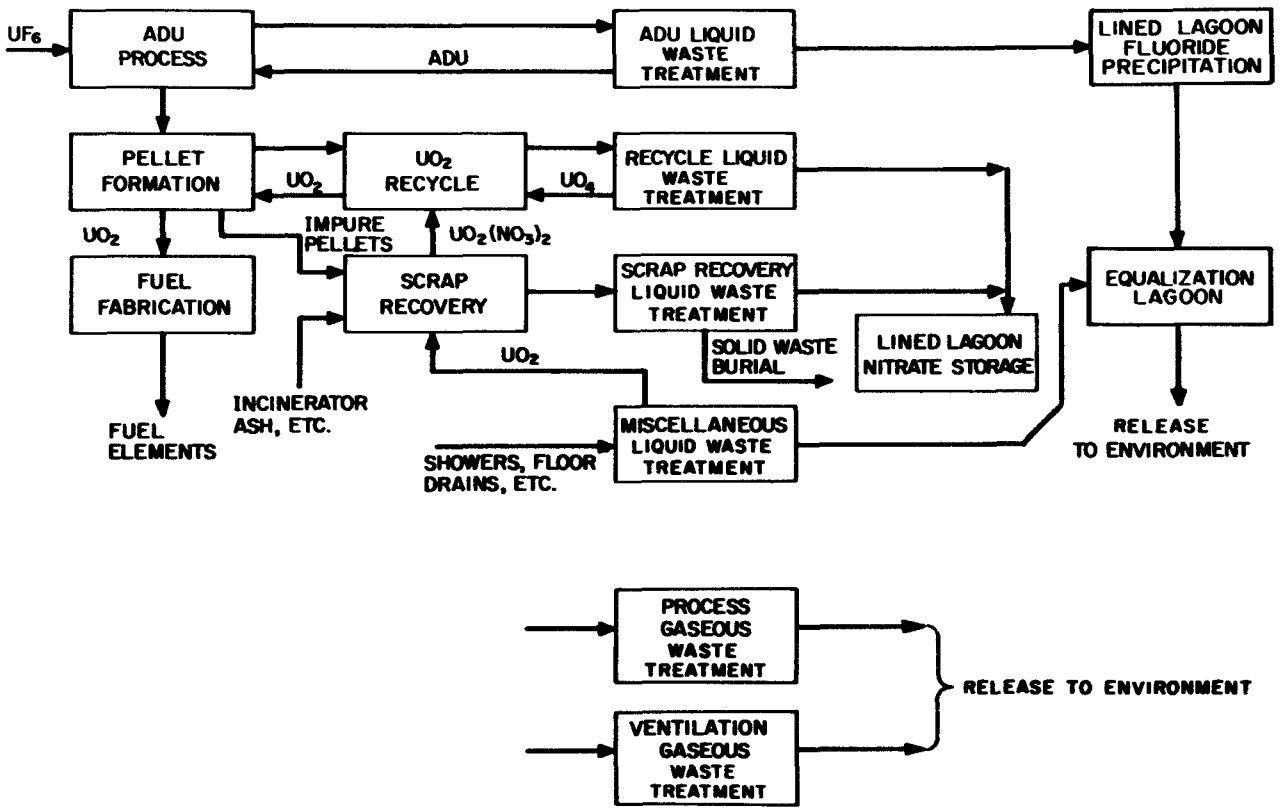

Fig. 5.3. Steps in the fabrication of fuel for light-water reactors.

Table 5.2. Items generally found in solid LLW at a fuel fabrication plant

Combustible	Noncombustible
Shoe covers	Discarded eqipment
Paper wipes	Piping
Plastic gloves	Brick
Coveralls	Wire
Smocks	Metal
Waste paper	Ceramic scrap
Filter components	Glassware
Plastic bags	Discarded jigs and fixtures
Wood	Metal pails
Oil	Insulation
	Tools

Data from J. W. Phillips et al., A Waste Handling Inventory Report for Reactor and Fuel Fabrication Facility Waste, ONWI-20 NUS-3314, Sect. 4.4 (March 1979).

burial ground. A survey by the Office of Nuclear Waste Isolation[3] (ONWI) of fabrication facilities in the United States indicates considerable variation among the plants in the quantities of solid waste produced. An average value of 2.27 m^3/MTIHM (80 ft^3/MTIHM) for the solid waste volume sent to burial grounds per plant was calculated, and this value is being used in the IDB.

5.3.2 Lagoon Waste

Liquid effluent from the ADU process is aged 16 to 20 h to allow additional $(NH_4)_2U_2O_7$ to settle. After filtration to recover the ADU, lime is added to precipitate the dissolved fluoride as CaF_2. The slurry flows to a lined lagoon to allow the CaF_2 to settle, and the supernate overflows to an equalizing lagoon where it is combined with other liquid waste. Overflow from the lined lagoon contains about 5 ppm uranium. The CaF_2 solid is classified as chemical waste and is stored in the lined lagoon. The average quantity produced is estimated to be 0.30 m^3/MTIHM.

5.3.3 Nitrate Waste

Liquid streams that contain nitrate originate in processing the off-specification UO_2 powder and pellets and in processing the scrap and miscellaneous solids to reclaim uranium. The stream from recycled powder and pellet processing is neutralized with lime to precipitate the remaining uranium, which is removed by filtration before the stream is sent to a retention lagoon. Liquid waste from scrap recovery is retained in the same lagoon. The volume of nitrate liquid waste is estimated to be 5.74 m^3/MTIHM.

5.3.4 Water Release

Treated aqueous streams that are released to the environment include the ADU process waste, gas scrubber waste, and miscellaneous water wastes from showers, laundry, laboratories, and floor drains. Miscellaneous liquid waste is treated only by filtration before being combined with the other streams in an equalization lagoon from which the overflow enters the environment. The combined aqueous release from a fuel fabrication plant is estimated to be 80.2 m^3/MTIHM.

5.3.5 LLW Ash

A significant portion of LLW trash generated at a fabrication plant is combustible, and, at some plants, incineration is used to reduce the solid waste volume. Incinerator ash is disposed of as LLW by shallow-land burial. The estimated volume of ash is 0.20 m^3/MTIHM.

5.3.6 Gaseous Discharge

The fuel fabrication plant discharges ~5.63×10^5 m^3/MTIHM of off-gas from process operations and ~7.34×10^5 m^3/MTIHM from the ventilation of process and work areas. Process gases are scrubbed and filtered before discharge to the atmosphere, while ventilation gases are filtered to ensure compliance with environmental regulations. The estimated fraction of the uranium feed that is exhausted to the atmosphere is 4.6×10^{-7} in process off-gas and 1.1×10^{-6} in ventilation off-gas.

5.4 REFERENCES

1. W. H. Pechin et al., Correlation of Radioactive Waste Treatment Costs and the Environmental Impact of Waste Effluents in the Nuclear Fuel Cycle for Use in Establishing 'As Low As Practicable' Guides — Fabrication of Light-Water Reactor Fuel from Enriched Uranium Dioxide, ORNL-TM-4902 (May 1975).

2. W. L. Carter and A. R. Olsen, An Evaluation of Fuel Fabrication and the Back End of the Fuel Cycle for Light-Water- and Heavy-Water-Cooled Nuclear Power Reactors, ORNL/TM-6685, Section 3 (June 1979).

3. J. W. Phillips et al., A Waste Inventory Report for Reactor and Fuel Fabrication Facility Waste, ONWI-20 NUS-3314, Sect. 4.4 (March 1979).

4. Allied General Nuclear Services, Estimates of Waste Quantities Generated by a Mixed Oxide (MOX) Fuel Fabrication Plant, 3132-FR-03 (December 1982).

6. POWER REACTOR OPERATIONS

A. H. Kibbey

6.1 SUMMARY

Reactor wastes currently account for more than half of the radioactive wastes shipped to commercial low-level waste burial grounds. Source terms, used by the IDB for projecting the volume and radioactive content of the typical waste streams from a generic PWR and BWR, are estimated from operating data[1-4] reported for 1978–1980 and from data collected in selected surveys.[5–7] The small, first-generation reactors with <200 MWe installed capacity are excluded because their waste generation and waste handling methods do not represent future trends.

The Nuclear Regulatory Commission (NRC) requires semiannual reporting of the volume and radioactivity of all nuclear power plant wastes shipped for commercial disposal. The waste categories defined by the NRC are: wet, dry compactible, irradiated components and "other."[8] The wet wastes generated from liquid stream cleanup are comprised largely of spent ion-exchange resin beads, filter cartridges, filter sludges, and evaporator bottoms (concentrates). The dry wastes are mostly compactible paper, cloth, plastics, glass, and rubber. Irradiated components consist of such things as control rods, control rod blades and channels, curtains, shrouds, fuel channels, and in-core chambers. A small fraction is noncompactible material such as discarded tools, wood, and concrete. These wastes, together with those that do not fit into the above-mentioned categories, are classified as "other" and may include discarded fuel racks, decontamination solutions, oils, or contaminated soil. All such wastes are considered in the IDB to be noncompactible. The wet wastes from PWRs are characteristically different from those of BWRs, as discussed in Sects. 6.2 and 6.3. Source terms are given for a generic PWR and BWR in Figs. 6.1 and 6.2 and companion Tables 6.1 and 6.2, respectively; these terms are normalized to 1 MWe-year installed capacity.

ORNL DWG 85–493R4

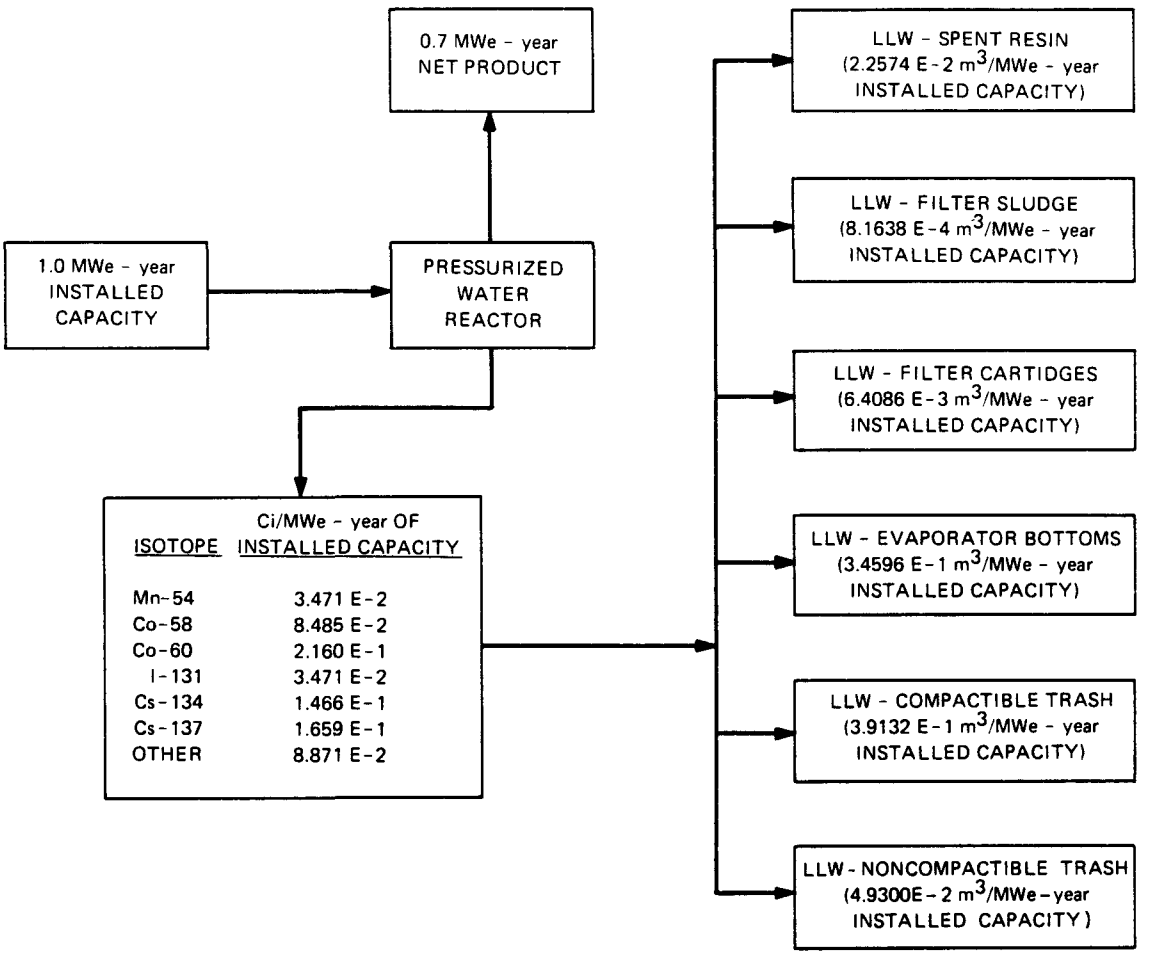

Fig. 6.1. Flow diagram for normal operation of a pressurized-water reactor power plant.

Table 6.1. Fractional distribution of elements among waste streams of a pressurized-water reactor power plant

	Waste streams (LLW)					
Element	Spent resin	Filter sludge	Filter cartridges	Evaporator bottoms	Compactible trash	Noncompactible trash
Manganese	6.25E-1	1.30E-2	3.39E-1	2.03E-2	2.02E-3	1.04E-3
Cobalt	4.89E-1	1.83E-2	4.76E-1	7.51E-3	6.34E-3	3.25E-3
Cesium	9.03E-1	3.19E-3	8.30E-2	4.88E-3	4.12E-3	2.12E-3
Other	4.53E-1	1.34E-3	3.47E-2	4.85E-1	1.69E-2	8.68E-3

ORNL DWG 83-494R3

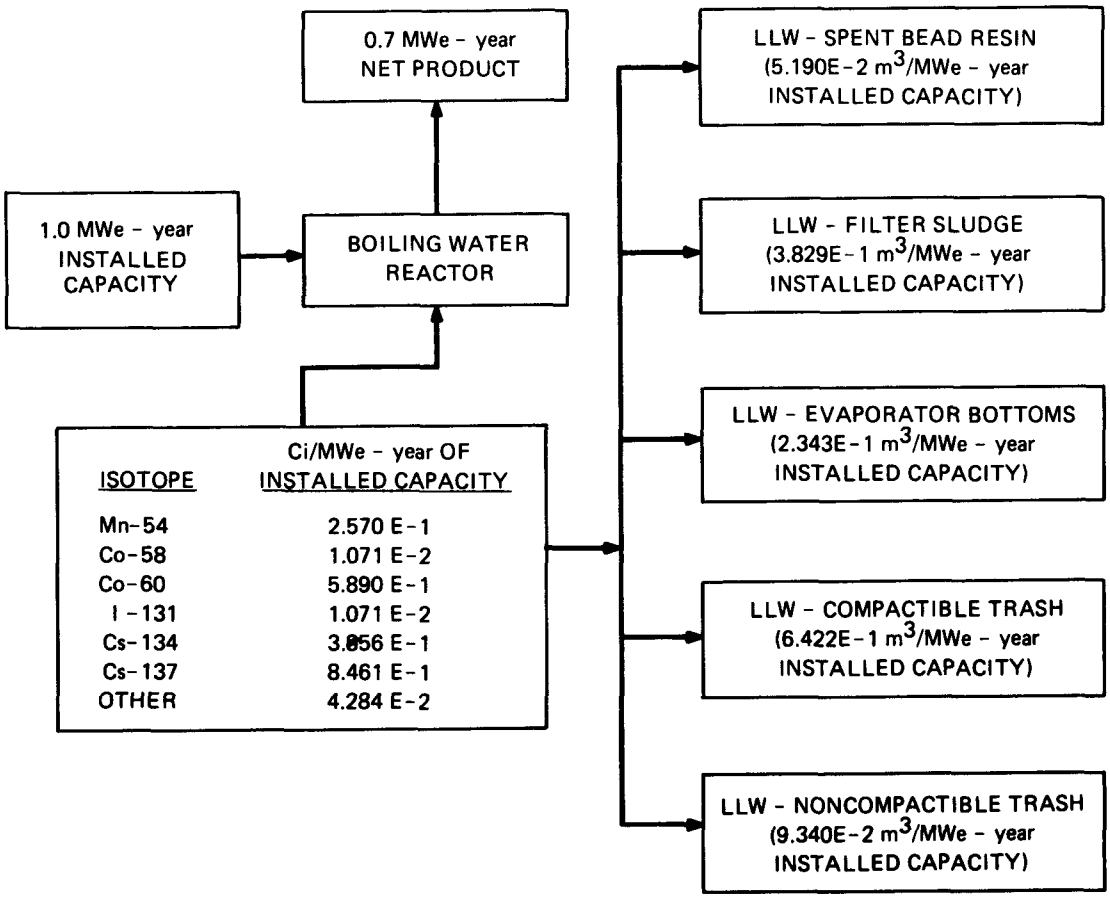

Fig. 6.2 Flow diagram of normal operation of a boiling-water reactor nuclear power plant.

Table 6.2. Fractional distribution of elements among waste streams of a boiling-water reactor power plant

	Waste streams (LLW)				
Element	Spent resin	Filter sludge	Evaporator bottoms	Compactible trash	Noncompactible trash
Manganese	2.63E-2	9.39E-1	3.12E-2	2.23E-3	1.06E-3
Cobalt	7.03E-2	8.71E-1	5.61E-2	1.85E-3	8.79E-4
Cesium	7.50E-1	1.60E-1	8.88E-2	3.50E-4	1.66E-4
Other	4.17E-2	1.38E-1	8.12E-1	5.40E-3	2.56E-3

6.2 PRESSURIZED-WATER REACTORS

To generate source terms for PWRs, the total net electricity generation by all PWRs for 1978–1980 was compiled and expressed as net MWe-year.[1] This value was then converted to equivalent installed capacity, by dividing by an assumed 0.7 capacity factor. The total volume and radioactivities for each type of PWR waste (wet, dry, irradiated components, and other) shipped during 1978–1980 were averaged, and overall terms for volume and Ci/MWe-year installed capacity were calculated.

The wet wastes from PWRs are mostly solidified evaporator bottoms containing borates. Spent filter cartridges are high-activity, low-volume wastes that are peculiar to PWRs (not BWRs). An attempt was made to designate the total wet wastes according to these waste streams: spent resin, filter sludge, filter cartridges, and evaporator bottoms. Based on, a survey of the uses of ion exchange at nuclear power plants[5] a maximum volume fraction of the total wet waste was assigned to spent resins. Using a previous solid radioactive waste survey as a basis,[9] a value of 0.785% of the total waste volume was assumed to be filters and filter sludge. The sludge was assumed to be 0.1% of the total waste volume, and the volume of solidified evaporator bottoms was then found by difference.

The total radioactivity in a typical PWR waste was estimated from values given in Ref. 6, and the radioactivity distribution among the various types of wastes was calculated from values given in Ref. 7.

6.3 BOILING-WATER REACTORS

The source terms for the various waste streams from a generic BWR were derived by the same method described for a PWR (Sect. 6.2). However, there are two distinct types of BWR (deep-bed and filter/demineralizer),[10] and characteristics of both types have been merged proportionately to generate source terms for a single generic BWR on the basis of electricity generated.

Each type of BWR has its own characteristic wet wastes. Deep-bed plants use regenerable ion-exchange resin beads for condensate cleanup;

the regenerant solutions give rise evaporator bottoms that contain sodium sulfate. Solidified evaporator bottoms are the major wet waste at deep-bed plants.

The filter/demineralizer BWR plants use powdered ion-exchange resins (sometimes mixed with diatomaceous earth or other filter aid) to precoat condensate filters. Because powdered resins are not regenerated, these plants rarely have evaporators, and powdered-resin filter sludge is their main solid waste.

In both types of BWR plants, waste resins (bead and powdered) are usually not incorporated into a solidification agent but are merely dewatered prior to shipment for disposal. The information used for determining the BWR source terms is from the same sources that were used for the PWR.[1-7]

6.4 REFERENCES

1. U.S. Department of Energy, "Operating History of U.S. Central Station Nuclear Power Plants," tape obtained from F. J. Boyer, Utility Coordination Office of Coordination and Special Projects, Washington, DC 20545.

2. J. Tichler and C. Benkovitz, Radioactive Materials Released from Nuclear Power Plants — 1978, NUREG/CR-1497 [BNL-51192] (March 1981).

3. J. Tichler and C. Benkovitz, Radioactive Materials Released from Nuclear Power Plants — Annual Report 1979, NUREG/CR-2227 [BNL-NUREG-51418] (November 1981).

4. J. Tichler and C. Benkovitz, Radioactive Materials Released from Nuclear Power Plants — Annual Report 1980, NUREG/CR-2907 [BNL-NUREG-51581] (December 1982).

5. W. E. Clark, The Use of Ion Exchange to Treat Radioactive Liquids in Light-Water-Cooled Nuclear Reactor Plants, NUREG/CR-0143 [ORNL/NUREG/TM-204] (August 1978).

6. M. J. Bell, "Sources of Reactor Wastes, Their Characterization and Amounts," a paper in the Proceedings of the Radwaste Management Workshop, New Orleans, Louisiana, January 12-14, 1977. (Workshop was sponsored by ORNL for the U.S. Nuclear Regulatory Commission, Effluent Treatment Systems Branch).

7. J. Phillips, F. Feizollahi, R. Martineit, W. Bell, and R. Stouky, A Waste Inventory Report for Reactors and Fuel Fabrication Facility Wastes, ONWI-20 [NUS-3314] (March 1979).

8. U.S. Nuclear Regulatory Commission, Regulatory Guide 1.21 (Revision 1), "Measuring, Evaluating, and Reporting Radioactivity in Solid Wastes and Releases of Radioactive Materials in Liquid and Gaseous Effluents from Light-Water-Cooled Nuclear Power Plants" (June 1974).

9. A. H. Kibbey and H. W. Godbee, A Critical Review of Solid Radioactive Waste Practices at Nuclear Power Plants, ORNL-4924 (March 1974).

10. American Nuclear Society, "Liquid Radioactive Waste Processing System for Light-Water Reactor Plants," an American National Standard, ANSI/ANS-55.6-1979, available from the American Nuclear Society, LaGrange Park, Illinois (April 24, 1979).

7. REPROCESSING

W. L. Carter

7.1 SUMMARY

Projections of the quantities and characteristics of waste produced in reprocessing irradiated commercial nuclear fuel are required in the Integrated Data Base (IDB) to assist in planning for waste treatment, transportation, and storage facilities. The published literature on commercial fuel reprocessing was reviewed to assess state-of-the-art knowledge on waste volumes from a reprocessing plant and the distribution of heavy metal, fission, and activation products among waste and product streams. The waste forms that are characterized are from a plant that reprocesses irradiated LWR fuel to recover uranium as UF_6 and plutonium as PuO_2. The waste forms are: solidified HLW, hulls/hardware/fuel residue, TRU solids, LLW solids, stored krypton, fixed iodine, fixed carbon-14, and gaseous effluent.

The purpose of this study was to evaluate data found in the literature in order to determine state-of-the-art values for reprocessing plant waste volumes and waste stream characteristics for use in the IDB program. The recommended waste volumes from a reprocessing plant, normalized for one metric ton of heavy metal charged to the reactor (MTHM), are shown on Fig. 7.1. The values are the as-produced volumes (except for krypton storage); the volume of krypton is given for storage at 150 atm pressure (15.2 MPa). These streams are the only designed discharges from the plant. Volumes of the respective waste containers and any volume reduction due to additional treament, such as compaction or incineration of TRU and/or LLW solids, have not been included in the data.

Table 7.1 gives the recommended fractional distribution of elements that are present in irradiated fuel among the several waste and product streams of a fuel reprocessing plant. In most cases the literature data were in reasonably good agreement on the partition of an element among the several waste streams, and the choice of a recommended value was straightforward. In cases of substantial disagreement, or where there were no data, the experience of persons knowledgeable in reprocessing

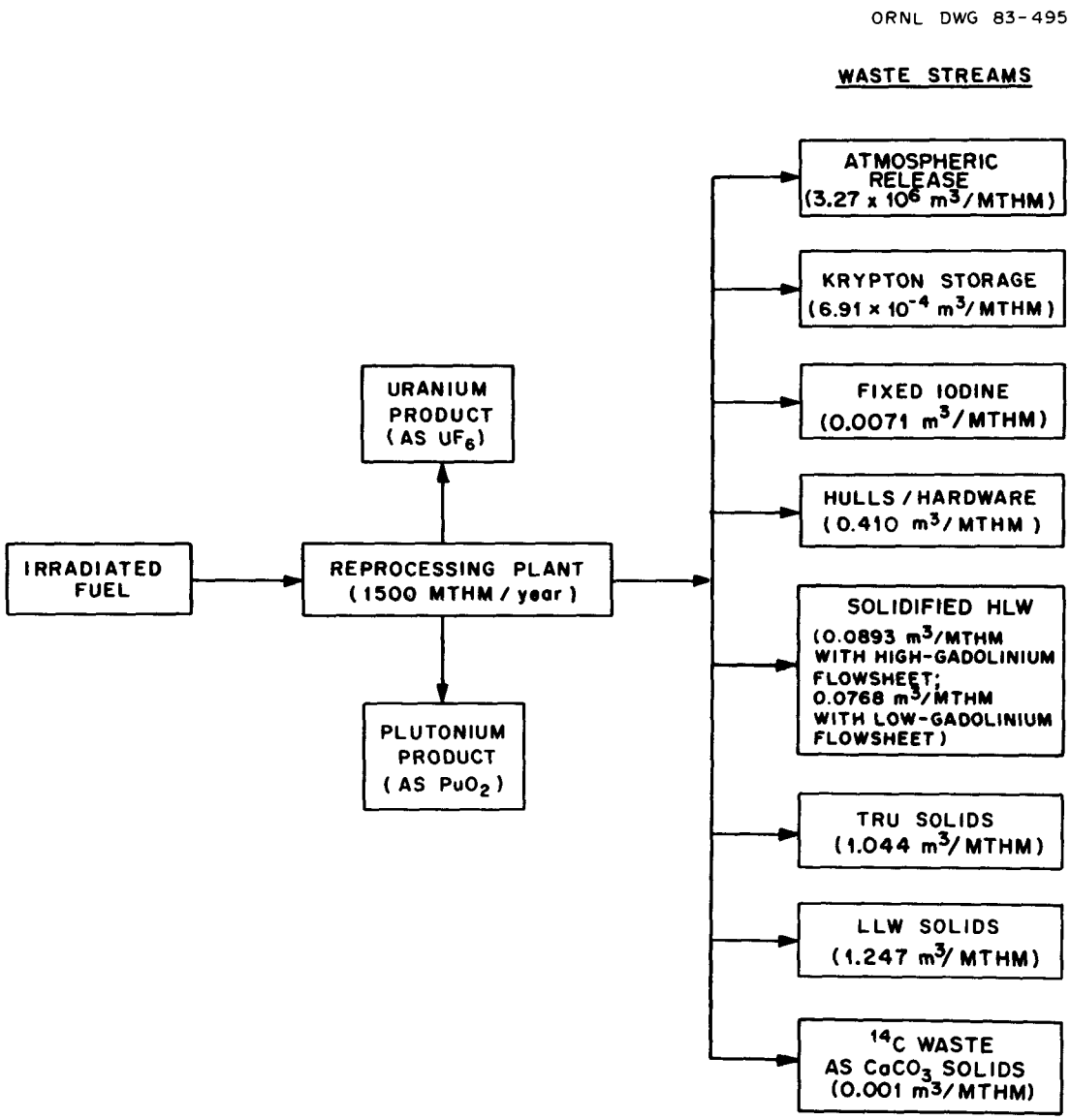

Fig. 7.1. Volumes of designed waste releases from an LWR fuel reprocessing facility.

Table 7.1. Mass fractions of elements in irradiated fuel that report to reprocessing plant waste and product streams

Stream component	Waste streams								Product streams	
	Solidified HLW	Transuranic hulls/hardware/residue	Other TRU solids	LLW solids	Fixed iodine	Fixed ^{14}C	Stored krypton	Atmospheric release	Uranium (as UF_6)	Plutonium (as PuO_2)
Heavy metals										
Uranium	0.005	0.0005	0.003	0.002				1E-05	0.9895	
Plutonium	0.010	0.0005	0.004					2E-13		0.9855
Americium	0.9995	0.0005	2E-05					1.1E-14	5E-09	1E-08
Curium	0.9995	0.0005	2E-05					1.1E-14	5E-09	1E-08
Other	0.9995	0.0005	2E-05					1.1E-14	5E-09	1E-08
Fission/activation products										
Tritium		0.15	0.001					0.849		
Carbon		0.0005				0.99		0.0095		
Krypton							0.90	0.10		
Strontium	0.9995	0.0005	2E-05	1.8E-06				1E-14		
Yttrium	0.9995	0.0005	2E-05	2E-05				1E-14		
Zirconium	0.9985	0.0005	0.001	1E-06				1.3E-11	3.4E-08	1.3E-07
Niobium	0.9985	0.0005	0.001	1E-06				4E-12	3.4E-08	1.3E-07
Molybdenum	0.9995	0.0005	2E-05	1E-06				1E-14		
Ruthenium	0.9995	0.0005	3.3E-05	1E-06				1.5E-08	6.3E-08	1.3E-07
Antimony	0.9995	0.0005	2E-05	1E-06				1E-14		
Iodine	0.0005		0.005		0.9934			0.001	3.6E-05	3.6E-05
Xenon							0.015	0.985		
Cesium	0.9995	0.0005	2E-05	1E-06				1E-14		
Barium	0.9995	0.0005	2E-05	1E-06				1E-14		
Cerium	0.9995	0.0005	2E-05	1E-06				1E-14		
Neodymium	0.9995	0.0005	2E-05	1E-06				1E-14		
Other	0.9995	0.0005	2E-05	1E-06				1E-14		
Activated structural material										
Tritium		1.0								
Carbon		1.0						8E-14		
Iron		1.0						5E-13		
Cobalt		1.0						5E-13		
Nickel		1.0						5E-13		
Chromium		1.0								
Manganese		1.0								
Zirconium		1.0								
Other		1.0								

chemistry of the Purex process was relied upon for the appropriate amounts. Each value is the mass fraction of the element in the irradiated fuel that reports to the indicated waste or product stream. These data are recommended for use as source terms in computing waste stream characteristics for the IDB.

7.2 SOURCES OF WASTE CHARACTERIZATION DATA

The IDB annual report of 1983 contained data for volumes and characteristics of wastes from a commercial fuel reprocessing plant.[1] These data had not been updated for several years and had been obtained from a study by Allied-General Nuclear Services (AGNS) for the operation of the Barnwell Nuclear Fuel Plant (BNFP) and from estimates by the IDB staff.[2] A follow-on study by AGNS personnel revised portions of the initial BNFP data.[3] The two AGNS studies were oriented primarily toward the determination of solid waste volumes and packaging requirements and, to a lesser extent, toward a determination of waste stream characteristics. However, a more comprehensive analysis was made of the solidified high-level waste (HLW) and the off-gas released to the atmosphere, giving estimates of the fractional releases of primary fission products and heavy metals.[3]

Comprehensive studies[4–6] of the management of commercially generated radioactive wastes were published in 1979 and 1980 to support planning strategy for mined geologic repositories capable of accepting spent fuel and waste from reprocessed fuel. The 1980 report[5] analyzes the significant environmental impacts that could occur if various technologies for management and disposal of high-level and transuranic wastes were developed and implemented. These reports utilize published data resulting from nuclear reactor operations and defense waste management to quantitize and characterize various waste streams. The data of these reports and the AGNS publications have been used to generate recommended source terms (Fig. 7.1 and Table 7.1) for quantities and characteristics of projected commercial wastes that can be expected from the future fuel reprocessing schedule chosen by the IDB.

The characterized waste forms are from a Purex reprocessing plant that receives and stores spent fuel, separates and partitions fissile materials (U and Pu) and fission products, converts uranium to UF_6 for

reenrichment, and converts plutonium to PuO_2. The plant is also capable of treating gaseous, liquid, and solid waste streams to convert these wastes to forms acceptable for disposal.

7.3 WASTE STREAM VOLUMES AND DESCRIPTIONS

Reprocessing irradiated fuel produces waste streams that cannot be released from the reprocessing facility without proper treatment and packaging to prepare the waste for the chosen disposal option. The long-lived highly radioactive waste (HLW) and the transuranic (TRU) waste are immobilized and contained for long-term isolation from the environment as in a mined repository. Other short-lived radioactive waste (LLW) poses no substantial threat to the environment and may be appropriately packaged and confined at licensed shallow-land-burial sites. The only designed release from a reprocessing plant to the environment is the gaseous effluent that has been treated to remove radioactive and chemical contaminants to levels that meet existing release criteria. Excess water is vaporized and released with the gaseous effluent.

Volumes of the designed waste releases from a reprocessing plant, normalized to one metric ton of heavy metal (MTHM) charged to the reactor, are given in Table 7.2. Comparative values are shown from two literature sources.[3,6] The data given are for the as-produced, unpackaged volumes except the value for stored krypton, which is the volume of the pressurized gas. Also, all volumes are for final waste forms except liquid HLW, which is included for comparison with the final solidified HLW. These literature values were reviewed to determine the recommended waste volumes for use in IDB calculations (as discussed in Section 7.1 and given in Fig. 7.1).

7.3.1 Gaseous Effluent

The gaseous effluent is primarily air from process vessels, instrumentation, process cells, and the building ventilation system. Excess process water is vaporized and exhausted in the gaseous effluent. The process water is vaporized and exhausted in the gaseous effluent. The principal radioactive contaminants are ^{3}H, ^{14}C, ^{85}Kr, ^{129}I, ^{133}Xe, and very small concentrations of ^{106}Ru and ^{137}Cs. Entrainment may also carry minute amounts of some fission product solids and heavy metals.

Table 7.2. Data on waste stream unpackaged volumes

Waste stream	Volume,[a] m^3/MTHM	
	BNFP[b]	DOE/ET-0028[c]
Gaseous effluent[d]	3.27E6	3.21E6
Liquid HLW[e]	1.005	0.795
Solidified HLW	0.0893	0.0772
TRU solids (10 nCi/g basis)	1.044	2.48
LLW solids	1.247	0.734
Hulls/hardware/fuel residue (TRU)	0.410	0.322
Stored krypton	6.91E-4[f]	3.1E-3[g]
Fixed iodine[h]	7.11E-3	3.3E-3
Fixed ^{14}C	[i]	1.0E-3

[a]All volumes are as-produced except krypton.
[b]Data source is Ref. 3.
[c]Data sources are Refs. 5 and 6.
[d]Includes evaporated H_2O.
[e]Includes aqueous raffinate from the first solvent extraction cycle, plus concentrated intermediate-level liquid waste.
[f]IDB estimate for storage at 150 atm (15.2 MPa) pressure; BNFP has no krypton removal from off-gas.
[g]Krypton stored 34 atm (3.44 MPa) pressure.
[h]The BNFP value is for absorption of iodine in mercuric nitrate, followed by fixation in cement; the DOE value is for adsorption on a granulated solid impregnated with silver nitrate.
[i]BNFP has no ^{14}C removal from off-gas.
[j]Reported as the volume of dried $CaCO_3$.

The off-gas is treated in a series of steps to remove the contaminants to acceptable levels before dispersion in the atmosphere.

7.3.2 Solidified HLW

Aqueous raffinate from the first solvent extraction cycle is the primary HLW stream. This stream is mixed with the concentrate from the evaporation of other aqueous waste streams and fed to a calciner to remove all liquid and transform chemical species to the respective metal oxides. Borosilicate glass frit is mixed with the calcine, and the mixture is vitrified in a vessel that becomes the waste disposal container. The high temperatures of the calcination and vitrification steps expel the gaseous fission products and some of the volatile metals (e.g., ruthenium), to the off-gas. Condensable liquids are separated from the off-gas, which is then routed to off-gas treatment facilities. Certain process chemicals (such as nitric acid) are recovered and recycled.

Conversion to glass reduces the volume of liquid waste by a factor of 10 to 12. The volumes of solidified HLW shown in Table 7.2 are as-produced values that would be contained in a disposal vessel that is typically 30 cm in diam by 3 m long.

7.3.3 TRU Solids

The values given in Table 7.2 for TRU waste are for solid material that has not received treatment (such as compaction or incineration) to reduce the volume. The waste consists of failed equipment, filters, laboratory trash, cleanup materials, clothing, glassware, plastics, rubber items, and general trash. Both the BNFP and DOE values are based on the initial definition of TRU waste, which states that solids containing >10 nCi/g of radioactivity, due to certain alpha-emitting nuclides of long half-life and high specific radiotoxicity, shall be designated as TRU waste. DOE Order 5820.2 has been issued to raise the alpha-radioactivity criterion for TRU waste to >100 nCi/g for nuclides having half-lives >20 years. The effect of DOE Order 5820.2 should be to reduce the volume classified as TRU waste, and BNFP personnel[3] have estimated that the volume reduction will be ~26%. Of course, waste that is removed from the TRU category reverts to the LLW category.

7.3.4 LLW Solids

The types of materials that constitute LLW are the same as those identified for TRU waste, and the volumes given in Table 7.2 are for as-produced waste. Volume reduction by compaction or incineration, where practicable, is customarily carried out before disposal. The LLW solids are not a serious threat to the environment and may be disposed of by shallow-land burial at licensed burial grounds.

7.3.5 Hulls/Hardware/Fuel Residue

This waste material is the uncompacted fuel element hulls and hardware, as well as the residue of insolubles from the fuel element dissolver. The waste, classified as TRU waste, is very radioactive from beta-gamma emissions and TRU nuclide radioactivity.

7.3.6 Stored Krypton

The relatively long half-life (10.74 years) of ^{85}Kr makes it advisable to remove krypton from plant off-gases before dispersal in the atmosphere. A cryogenic process that removes krypton and xenon from the off-gas is followed by fractionation to concentrate the krypton for pressurized storage (the mixture is ~80% Kr and 20% Xe). Krypton recovery is ~90%. A storage period of 50 years is usually considered to be adequate for krypton, which may then be released to the environment.

7.3.7 Fixed Iodine

Release of radioactive iodine to the atmosphere presents a biological risk, since iodine can be taken up by the food chain and concentrated in the human thyroid. Normal spent-fuel decay periods are sufficient to decay all iodine isotopes except ^{129}I, which has a 16-million-year half-life. Iodine recovery from the off-gas can be accomplished by aqueous scrubbing techniques or by adsorption on solids. The BNFP data of Table 7.2 are for iodine removal by reaction with mercuric nitrate solution, followed by fixation in cement. The DOE data of the same table are for adsorption of iodine on amorphous silicic acid that has been impregnated with silver nitrate.

7.3.8 Fixed Carbon-14

Small quantities of ^{14}C (half-life = 5730 years) are produced during fuel irradiation, primarily by neutron reaction with ^{14}N that is

present in fuel rods. During reprocessing, the isotope is converted to $^{14}CO_2$, which enters the off-gas stream. If exhausted to the atmosphere, ^{14}C can enter the food chain via photosynthesis reactions. Several processes may be used to remove $^{14}CO_2$ from the off-gas: absorption in a lime slurry, absorption in a liquid fluorocarbon, or adsorption on a molecular sieve. Regardless of the method used to decontaminate the gas stream, the most suitable means for for final disposal is fixation as $CaCO_3$. The DOE value for fixed ^{14}C shown in Table 7.2 is the estimated volume of dried $CaCO_3$.

7.4 LITERATURE SURVEY OF ELEMENT DISTRIBUTION IN WASTE STREAMS

Both AGNS and DOE studies[3,5,6] were reviewed for data on the distribution of heavy metals, fission products, structural metals, and products among the several waste and product streams from a fuel reprocessing plant. These data are summarized in Table 7.3, which also includes, for comparison, the values given in the 1983 IDB report.[1] The waste streams are those that would be generated by a complete fuel reprocessing plant that recovers uranium as UF_6 and plutonium as PuO_2 and treats the liquid, solid, and gaseous waste streams for conversion to forms that are acceptable for disposal.

Published data do not include a complete accounting of the final disposition of every element present in spent fuel. Blank positions in the table indicate there were no available data. All effluent streams of a reprocessing plant are characterized by a computer model of the plant. The model includes all elements present in spent fuel; hence, when published data were not available, it was necessary to estimate values in order to complete IDB calculations. The data shown in Table 7.3 were used to determine the IDB recommended distribution of heavy metals, fission products, and structural materials among waste and product streams, as discussed in Sect. 7.1 and listed in Table 7.1.

7.4.1 Solidified HLW

The solidified HLW contains >99% of the nonvolatile fission products and heavy metals (other than uranium and plutonium). A nominal loss of uranium and plutonium to the waste is about 0.5 to 1.5%.

Table 7.3. Fractional distribution (mass fractions) of elements initially present in irradiated fuel among waste and product streams of a fuel reprocessing plant

Element	Solidified HLW			Hulls/hardware/ fuel residue[a]		TRU solids[a]		LLW solids[a]	
	IDB[b]	BNFP[c]	EIS[d,e]	IDB[b]	EIS[d,e]	IDB[b]	EIS[d,e]	IDB[b]	EIS[d,e]
Heavy metals									
U	0.005	0.0044	0.005	0.0005	0.0005	0.003	0.001	0.002	0.0013
Pu	0.005	0.01	0.005	0.0005	0.0005	0.004	0.00381	0	0
Am	0.995	0.915	1.0	0.0005	0.0005	2E-5	2.31E-5	0	0
Cm	0.995	0.915	1.0	0.0005	0.0005	2E-5	2.31E-5	0	0
Other	0.995		>0.9994	0.0005	0.0005	2E-5	1E-5	0	0
Fission/activation products									
H	0		0	0.15	0.15	0.001	0.001	0	0
C	0		0	0.0005	0.16	0	0	0	0
Kr	0		0	0	0	0	0	0	0
Sr	0.995	1.0	1.0	0.0005	0.0005	2E-5	2.31E-5	1.8E-6	1E-6
Y	0.995	1.0		0.0005	0.0005	2E-5	2.31E-5	2E-6	1E-6
Zr	0.995	0.994		0.0005	0.0005	0.001	0.00102	1.5E-8	1E-6
Nb	0.995			0.0005	0.0005	0.001	0.00102	0	1E-6
Mo	0.995	0.993		0.0005	0.0005	2E-5	2.31E-5	2E-5	1E-6
Ru	0.995	0.956	1.0	0.0005	0.0005	0.001	3.3E-5	2E-4	1E-6
Sb	0.995	0.86		0.0005	0.0005	2E-5	2.31E-5	2E-5	1E-6
I	0	9.96E-3	4.995E-3	0	0	0.005	0.0051	0	0
Xe	0			0		0		0	0
Cs	0.995	1.0	1.0	0.0005	0.0005	2E-5	2.31E-5	1.2E-5	1E-6
Ba	0.995	0.956		0.0005	0.0005	2E-5	2.31E-5	2E-5	1E-6
Ce	0.995	1.0	1.0	0.0005	0.0005	2E-5	2.31E-5	7.2E-8	1E-6
Nd	0.995	0.676		0.0005	0.0005	2E-5	2.31E-5	2E-5	1E-6
Other	0.995			0.0005	0.0005	2E-5	2.31E-5	2E-5	1E-6
Activated structural material									
H	0			1.0		0.001		0	
C	0			1.0		0		0	
Fe	0		0	1.0	1.0	0	0	0	
Co	0		0	1.0	1.0	0	0	0	
Ni	0		0	1.0	1.0	0	0	0	
Cr	0			1.0		0		0	
Zr	0			1.0		0		0	
Other	0			1.0		0		0	

Table 7.3 (continued)

Element	Fixed iodine[a]		Stored krypton[a]		Atmospheric release		
	IDB[b]	EIS[d,e]	IDB[b]	EIS[d,e]	IDB[b]	BNFP[c]	EIS[d,e]
Heavy metals							
U	0				1E-5	2.78E-5	1.02E-5
Pu	0				2E-11	1.76E-13	1E-14
Am	0				1.1E-14		3E-11
Cm	0				1.1E-14		1E-14
Other	0				1.1E-14		
Fission/activation products							
H	0				0.849	0.80	0.90
C	0				0.9995	1.0	0.01
Kr	0		0.90	0.90	0.10	1.0	0.10
Sr	0				1E-14		1E-14
Y	0				1E-14		
Zr	0				1.3E-11		
Nb	0				4E-12		
Mo	0				1E-14		
Ru	0				1.5E-8	1.79E-9	2E-8
Sb	0				1E-14		
I	0.994	0.995			0.001	0.0012	0.003
Xe	0		0.015	0.015	0.985	1.0	0.985
Cs	0				1E-14	3.85E-11	1E-14
Ba	0				1E-14		
Ce	0				1E-14		1E-14
Nd	0				1E-14		
Other	0				1E-14	9.84E-16	
Activated structural material							
H	0		0		0		
C	0		0		0		8E-14
Fe	0		0		0		5E-13
Co	0		0		0		5E-13
Ni	0		0		0		5E-13
Cr	0		0		0		
Zr	0		0		0		
Other	0		0		0		

Table 7.3 (continued)

	UF_6 product			PuO_2 product			Total fraction accounted for		
	IDB[b]	BNFP[c]	EIS[d,e]	IDB[b]	BNFP[c]	EIS[d,e]	IDB	BNFP[f]	EIS[f]
Heavy metals									
U	0.9895	0.9953	0.9906	0	<4E-05		1.0000	0.9998	0.9984
Pu	0			0.9910	0.9847	0.9908	1.0005	0.9947	1.0001
Am	5E-9	<3.7E-6		1E-8	<0.042		0.9955	0.9570	1.0005
Cm	5E-9	<3.7E-6		1E-8			0.9955	0.9150	1.0005
Other	5E-9	<3.7E-6		1E-8			0.9955	<3.7E-6	0.9999
Fission/activation products									
H	0			0			1.0000	0.8000	1.0510
C	0			0			1.0000	1.0000	0.1700
Kr	0			0			1.0000	1.0000	1.0000
Sr	0			0			0.9955	1.0	1.0005
Y	0			0			0.9955	1.0	0.0005
Zr	3.4E-8			1.3E-7	6.4E-10		0.9965	0.9940	0.0015
Nb	3.4E-8			1.3E-7	6.4E-10		0.9965	6.4E-10	0.0015
Mo	0			0			0.9955	0.993	0.0005
Ru	6.3E-8			1.3E-7			0.9967	0.9560	1.0005
Sb	0			0			0.9955	0.86	0.0005
I	3.6E-5			3.6E-5			1.0001	0.0112	1.0081
Xe	0			0			1.0000	1.0000	1.0000
Cs	0			0			0.9955	1.0000	1.0005
Ba	0			0			0.9955	0.956	0.0005
Ce	0			0			0.9955	1.0	1.0005
Nd	0			0			0.9955	0.676	0.0005
Other	0			0			0.9955	9.84E-16	0.0005
Activated structural material									
H	0			0			1.0010		
C	0			0			1.0000		8E-14
Fe	0			0			1.0000		1.0000
Co	0			0			1.0000		1.0000
Ni	0			0			1.0000		1.0000
Cr	0			0			1.0000		
Zr	0			0			1.0000		
Other	0			0			1.0000		

Footnotes for Table 7.3

[a]No comparable BNFP data available for this waste category.

[b]Source of IDB data: U.S. Department of Energy, Spent Fuel and Radioactive Waste Inventories, Projections, and Characteristics, DOE/NE-0017/2, Fig. A.7, p. 260 (September 1983).

[c]Source of BNFP data: W. H. Carr et al., Estimation of Nuclear Waste Types, Characteristics, and Quantities from the Barnwell Nuclear Fuel Plant, ONWI/3092/TOP-01 (E512-09600R), Revision 1 (October 1982).

[d]Source of EIS data: U.S. Department of Energy, Management of Commercially Generated Radioactive Waste, DOE/EIS-0046F, Vol. 1, Table 4.2.3, p. 4.14, and Table 4.3.1, p. 4.45 (October 1980).

[e]Source of EIS data: U.S. Department of Energy, Technology for Commercial Radioactive Waste Management, DOE/ET-0028, vol. 1, Table 3.3.3, p. 3.3.4, and Tables 3.3.27–3.3.36, pp. 3.3.49–3.3.55 (May 1979).

[f]There is insufficient data in the referenced source to close a material balance on every nuclide (i.e., for the summation of all fractions to be approximately unity).

7.4.2 Hulls/Hardware/Fuel Residue

Intimate contact between dissolved fuel and undissolved structural components of the fuel elements in the dissolver results in some occlusion of fission products and heavy metals on the solids. About 0.05% of the nonvolatile fission products and heavy metals are estimated to remain with these solids. Tritium that accompanies the solid waste (~15%) is believed to be present as a dissolved gas in the zirconium cladding. All structural material in the fuel element leaves the plant in this waste residue.

7.4.3 TRU Solids

The physical makeup of the TRU solid waste was discussed in Sect. 7.3.3. Most of the waste is disposable materials that have been contaminated in daily plant operation, with very small quantities of alpha-emitting nuclides. Loss of fuel values in this waste is estimated to be a few tenths of one percent, but fission product loss is generally two to three orders of magnitude less. Most TRU waste requires only the shielding that can be provided by the waste container.

7.4.4 LLW Solids

Low-level solid waste is physically similar to TRU solid waste, but it does not require handling according to DOE Order 5820.2. The fraction of the initially present spent-fuel fission products that accompanies the LLW solids is on the order 10^{-5} to 10^{-8}. The fraction of uranium lost in this waste may be ~0.1%.

7.4.5 Fixed Iodine

More than 99% of the iodine initially in the spent fuel is estimated to be recovered in off-gas treatment, with small amounts appearing in the TRU solids, solidified HLW, and gases released to the atmosphere. The treatment that removes iodine from the off-gas is highly selective, so the fixed iodine waste is expected to contain negligible amounts of other elements.

7.4.6 Stored Krypton

The principal concern with radioactive krypton (^{85}Kr) is its worldwide accumulation in the atmosphere. Cryogenic removal is employed to

recover ~90% of the initial krypton, allowing the remainder to be dispersed in the atmosphere. The recovery process also removes xenon, but, since xenon presents no environmental hazard, it is fractionated from the bulk of the krypton and released. Estimates are that only ~1.5% of the initial xenon will be stored with the krypton.

7.4.7 Atmospheric Release

The gaseous effluent from a fuel reprocessing plant that treats 5 MTHM/day is estimated to be $>16 \times 10^6$ m^3 day, primarily air and water vapor. The effluent includes the off-gases from process vessels, cell ventilation, and building ventilation and is exhausted from a tall stack after treatment by filtration and/or chemical methods, to ensure compliance with release criteria. Even though the gases are thoroughly treated, there is slight entrainment of fission product solids and heavy metals that contributes to the estimated release of 10^{-14} to 10^{-12} mass fraction of some of these nuclides. The entrainment fraction for uranium may be as much as 10^{-5} of the metal charged to the plant.

Neither the BNFP study[3] nor the DOE study[4] included tritium removal, and the fraction released in the off-gas is estimated to be ~90%. Also, the BNFP is not designed to remove $^{14}CO_2$, and essentially all of it is in the released off-gas.[3] These studies[3,4] show that as much as 98.5% of the innocuous xenon may be released but only ~0.3% of the iodine.

7.4.8 Recovered Uranium

Overall uranium recovery (as UF_6) is expected to be ~99%, and the product contains only trace quantities of transuranic nuclides. There may also be trace contamination from fission products such as zirconium, niobium, ruthenium, and iodine. Uranium that is recovered from PWR fuel is returned to a gaseous diffusion plant for reenrichment.

7.4.9 Plutonium Product

Overall plutonium recovery (as PuO_2) is estimated to be ~98.5%, with only trace quantities of uranium and other heavy metals. Very small amounts of fission product zirconium, niobium, ruthenium, and iodine may also be present.

7.5 REFERENCES

1. U.S. Department of Energy, Spent Fuel and Radioactive Waste Inventories, Projections, and Characteristics, DOE/NE-0017-2 (September 1983).

2. W. H. Carr, Estimation of Nuclear Waste Types, Characteristics, and Quantities from the Barnwell Nuclear Fuel Plant, E512-09600R (May 1982).

3. W. H. Carr et al., Estimation of Nuclear Waste Types, Characteristics, and Quantities from the Barnwell Nuclear Fuel Plant, ONWI/3092/TOP-01 (E512-09600R), Revision 1 (October 1982).

4. U.S. Department of Energy, Technology for Commercial Radioactive Waste Management, DOE/ET-0028, Vol. 1 (May 1979).

5. U.S. Department of Energy, Management of Commercially Generated Radioactive Waste, DOE/EIS-0046F, Vol. 1 (October 1980).

6. U.S. Department of Energy, Technology for Commercial Radioactive Waste Management, DOE/ET-0028, Vol. 2 (May 1979).

8. NON-FUEL-CYCLE LOW-LEVEL WASTES

A. H. Kibbey

8.1 SUMMARY

In addition to the low-level radioactive wastes described in Chapters 3–7, various other low-level wastes (LLW) are generated by industries, institutions, and government agencies. These wastes, except those arising from DOE/defense activities, are shipped to commercial disposal sites.

The major portion (83% by volume)[1] of the LLW that are not associated with the nuclear fuel cycle originates at institutions such as colleges, universities, hospitals, and clinics. These institutional wastes can be categorized as bioresearch, medical, and nonbioresearch.[2] About 2%, by volume, of the total waste sent for commercial disposal arises from the activities of government agencies other than DOE.[3,4] The remainder comes from various industrial sources (e.g., manufacture of radiopharmaceuticals and radiochemicals). The bioresearch and medical wastes have low radioactivity levels. The bioresearch wastes from animal studies usually contain long-lived, β-emitting nuclides. The medical wastes generated in diagnostic and therapeutic procedures used on humans generally contain short-lived nuclides that emit gamma rays. The nonbioresearch and industrial wastes usually contain higher activity levels of either fission products or induced activities with longer half-lives. About half of the nonbioresearch waste stream occurs as sealed source material that is not included in the IDB. Government wastes are assumed to be similar to commercial wastes. The various source terms for non-fuel-cycle wastes are shown in Fig. 8.1. A representative composition for all the waste that has been commercially buried to date was based on experience reported from the West Valley, New York, LLW disposal site through 1972.[5] ORIGEN2 was used to perform decay and daughter in-growth calculations.[6] This representative composition, presented in Table 8.1, is used to estimate current radionuclide inventories and provides source terms for future projections.

ORNL DWG 84-4008R3

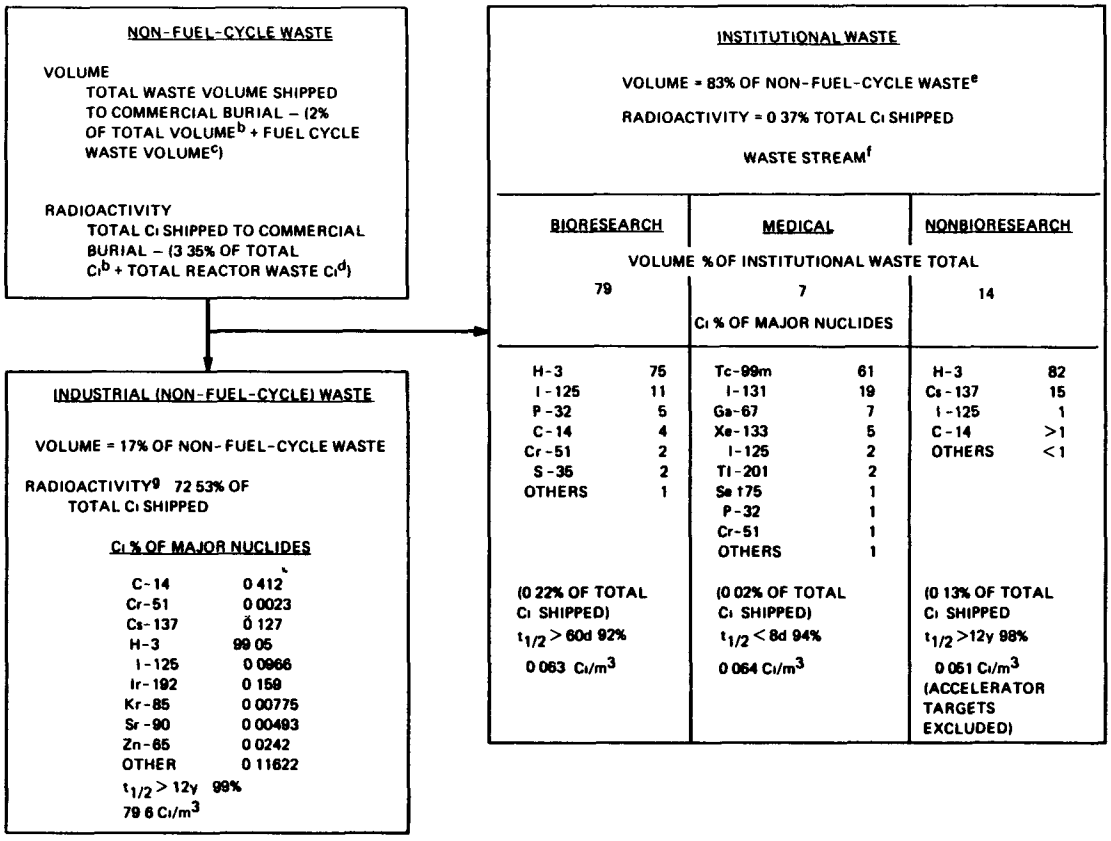

[a]Assume volume growth for institutional and industrial wastes of 3% (1983–1990), 2% (1991–2000), and 1% (2001–2020).

[b]Represents government/military waste (calculated from values in Refs. 1 and 2).

[c]See Sects. 3–7.

[d]Natural, enriched, and depleted U activity (Ci) in waste from the front end of the fuel cycle is neglected.

[e]From Ref. 3.

[f]From Ref. 4.

Fig. 8.1. Industrial and institutional wastes.

Table 8.1. Representative values for nuclide concentrations in waste at commercial burial grounds[a]

Nuclide	Concentration (Ci/m^3)
H-3	5.897E-2
C-14	2.900E-3
Cr-51	8.659E-2
Mn-54	9.932E-1
Co-58	1.271E+0
Fe-59	8.571E-3
Co-60	8.872E-1
Zn-65	3.323E-3
Sr-90	4.432E-1
Y-90	4.432E-1
Zr-95	5.446E-3
Nb-95	1.214E-2
Tc-99	5.887E-3
Sb-125	1.257E-2
Te-125m	3.131E-3
Ru-106	2.740E-2
Rh-106	2.740E-2
Cs-134	6.773E-1
Cs-137	1.000E+0
Ba-137m	8.795E-1
Ce-144	6.291E-2
Pr-144	6.291E-2
Pm-147	2.573E-4
Sm-151	4.717E-4
Eu-152	3.860E-4
Eu-154	3.860E-4
Eu-155	2.573E-4
Ra-226	1.156E-4
Th-232	1.569E-5
U-235	1.817E-6
U-238	2.337E-3
Pu-238	7.094E-1[b]
Pu-239	1.915E-3[b]
Am-241	3.603E-4

[a]Estimates based on values given in Ref. 5, Table 3.16, p. (3–43). The "Mixtures and Miscellaneous" category was assumed to be induced-activity waste, and the remaining activities (except for radium, the actinides, and "mixed fission products") were considered to comprise "Other" waste. The commercially disposed waste was thus placed into categories corresponding to those for DOE/defense waste. The Ci distributions shown for similar DOE/defense wastes (Table 8.4) were then applied.

[b]Barnwell's commercial burial ground has never permitted burial of plutonium, so no Barnwell value is included in this figure.

8.2 INSTITUTIONAL WASTE

Of the three waste streams that comprise institutional waste, the nonbioresearch stream (representing 14% of the institutional waste volume) is the most varied in composition.[2] These are largely wastes from academic research and development programs and may include research reactor wastes. About half of the nonbioresearch waste stream activity is in the form of small-volume sealed sources or accelerator targets which are not considered in the IDB.

A major portion of the medical waste stream is held onsite for decay and then disposed of in municipal landfills or sewage systems. The medical wastes that are shipped to burial normally contain very low concentrations of short-lived γ-emitters and represent about 7% of the volume of institutional waste shipped.[2]

The largest volume fraction of the institutional waste (79%) arises from in vivo bioresearch studies with animals.[2] These studies require sampling of body fluids and tissues over extended time periods. Relatively long-lived, β-emitting nuclides such as ^{3}H or ^{14}C are especially suitable for such studies because they are so physiologically active. The β-analyses are normally done by a scintillation counting method in which the sample is dissolved in an organic solvent (usually xylene or toluene) containing a phosphor. These scintillation fluids, along with other absorbed liquids, dry solids, biological wastes, and sealed sources make up the institutional waste stream. The anticipated annual growth rates[7] for the institutional waste volumes needing disposal are: for 1983–1990, 3%; for 1991–2000, 2%; and for 2001–2020, 1%.

8.3 NON-FUEL-CYCLE INDUSTRIAL WASTE

The volume and radioactivity of the non-fuel-cycle industrial waste shipped to burial is obtained by difference. These wastes vary widely, and only recently has an attempt been made to characterize them.[8] It is estimated that tritium is the most significant radioactive species in these industrial wastes (see Fig. 8.1). Other nuclides that are widely used in the manufacture of radiopharmaceuticals (e.g., ^{14}C, ^{125}I, ^{99m}Tc, ^{133}Xe, etc.) and radiochemicals are also waste contributors. It is

estimated that non-fuel—cycle industrial wastes account for <7% of the total waste volume (but ~72.5% of the total curies) shipped to commercial burial grounds. These industrial wastes include some sealed source materials (e.g., ^{60}Co and ^{137}Cs). The same growth rates were assumed for the non-fuel—cycle industrial wastes as for the institutional wastes (Sect. 8.2).

8.4 DOE/DEFENSE WASTE

An inventory of DOE/defense, LLW buried at the various DOE sites is maintained on a quarterly basis by EG&G Idaho (INEL).[9] These DOE wastes are of six types: uranium/thorium, fission product, induced activity, tritium, alpha (<10 nCi/g), and "other". Each site reports the total volume and gross curies for each type of waste it buries. From this information, it is possible to calculate an average volume fraction for each waste type buried at the site and the corresponding activity fraction for each (see Tables 8.2 and 8.3). An estimated, characteristic, radionuclide composition is given for each type of waste (except tritium) in Table 8.4 (Refs. 5, 10—12). The rationale is explained in the footnotes. Tritium waste is assumed to contain only tritium. These source term values are assumed to remain constant through the year 2020. ORIGEN2 is used to calculate decay of the radionuclides in the wastes from the time of burial to any chosen time in the future. This computer code also calculates the heat generated in the waste due to radioactive decay.

Table 8.2. Average annual volumes of LLW buried at DOE/defense sites[a]

Site	Annual volume[c] (m^3)	Waste type (fraction of total)[b]					
		Uranium/ thorium	Fission product	Induced activity	Tritium	Alpha (<10 nCi/g)	Other
LANL	4.573E+3	2.30E-1	8.10E-2	3.30E-2	2.60E-2	6.30E-1	0.00E+0
INEL	4.287E+3	3.00E-3	4.28E-1	5.69E-1	0.00E+0	0.00E+0	0.00E+0
NTS	2.535E+4	9.80E-2	6.02E-1	3.50E-2	9.00E-3	2.40E-1	1.50E-2
ORNL	1.713E+3	8.70E-2	5.55E-1	1.91E-1	3.60E-2	5.50E-2	7.50E-2
HANF	1.381E+4	0.00E+0	8.47E-1	1.53E-1	0.00E+0	0.00E+0	0.00E+0
SRP	2.140E+4	1.45E-1	5.79E-1	9.50E-2	6.50E-2	1.13E-1	4.00E-3
All other	5.365E+3	9.12E-1	2.00E-2	4.30E-2	1.20E-2	1.30E-2	0.00E+0
Total	7.650E+4						

[a]No TRU waste included. Values derived from Ref. 9.
[b]Based on total waste buried during CY 1979–1983.
[c]An average value derived from Ref. 9 was used for projections in this report.

Table 8.3. Average annual radioactivity for LLW buried at DOE/defense sites[a]

Site	Average annual β–γ activity[c] (10^3 Ci)	Waste type (fraction of total β–γ activity)[b]					
		Uranium/ thorium	Fission product	Induced activity	Tritium	Alpha (<10 nCi/g)	Other
LANL	3.800E+4	7.000E-5	1.540E-3	2.722E-2	9.603E-1	1.085E-2	0.000E+0
INEL	2.170E+5	0.000E+0	7.887E-2	9.211E-1	0.000E+0	0.000E+0	0.000E+0
NTS	3.580E+5	5.660E-3	4.000E-5	0.000E+0	8.951E-1	2.090E-3	9.713E-2
ORNL	3.800E+4	4.800E-3	8.350E-1	1.307E-1	2.900E-2	4.500E-4	1.000E-4
HANF	6.150E+5	0.000E+0	9.057E-1	9.434E-2	0.000E+0	0.000E+0	0.000E+0
SRP	1.100E+5	4.000E-5	4.650E-3	4.065E-1	5.667E-1	1.900E-4	2.190E-2
All other	<1.000E+3	8.559E-1	1.120E-2	1.183E-2	1.204E-1	2.900E-4	4.000E-4
Total	1.377E+6						

[a]No TRU waste included. Values derived from Ref. 9.
[b]Based on total waste buried during CY 1979–1983.
[c]An average value derived from Ref. 9 used for projections in this report.

Table 8.4. Representative radionuclide composition for DOE/defense wastes

Uranium/Thorium LLW[a]		Fission product LLW[b]		Induced-activity LLW[c]		Alpha (<10 nCi/g) LLW[d]		"Other" LLW[e]	
Nuclide	Radioactivity (%)	Nuclide	Radioactivity (%)	Nuclide	Radioactivity (%)	Nuclide	Radioactivity (%)	Nuclide	Radioactivity (%)
Tl-208	0.0017	Co-60	0.08	Cr-51	4.95	Pu-238	2.62	H-3	1.22
Pb-212	0.0045	Sr-90	7.77	Mn-54	38.10	Pu-239	0.10	C-14	0.06
Bi-212	0.0045	Y-90	7.77	Co-58	55.40	Pu-240	0.70	Mn-54	6.76
Po-212	0.0029	Zr-95	1.27	Fe-59	0.49	Pu-241	96.4	Co-58	6.24
Po-216	0.0045	Nb-95	2.83	Co-60	0.87	Am-241	0.004	Co-60	18.03
Ra-224	0.0045	Tc-99	0.02	Zn-65	0.19	Cm-242	0.056	Sr-90	8.48
Ra-228	0.0269	Sb-125	2.93			Cm-244	0.020	Y-90	8.48
Ac-228	0.0269	Te-125m	0.73		100.00			Tc-99	0.12
Th-228	0.0045	Ru-106	6.39				100.000	Cs-134	13.98
Th-231	0.0259	Rh-106	6.39					Cs-137	19.13
Th-232	0.273	Cs-134	0.38					Ba-137m	16.77
Th-234	33.197	Cs-137	17.65					U-238	0.73
Pa-234m	33.197	Ba-137m	16.04						
Pa-234	0.0034	Ce-144	14.67						100.00
U-235	0.0258	Pr-144	14.67						
U-238	33.197	Pm-147	0.06						
		Sm-151	0.11						
	100.0000	Eu-152	0.09						
		Eu-154	0.09						
		Eu-155	0.06						
			100.00						

[a]Based on grams of Th-232, U-238, and U-235 reported buried at the West Valley, New York, disposal site through CY 1974 (Table 3.17, p. 3-44 in Ref. 5). ORIGEN2 (Ref. 6) was used to obtain associated daughter products of this mixture at the end of one year. Values <0.001% of total activity were omitted.

[b]Adapted from the CPP waste composition given on p. 7 of Ref. 10, with appropriate daughter products added. Nuclides contributing <0.1% of total activity were omitted.

[c]Induced activity values were taken from data for ANL waste (table on p. 7 of Ref. 10); ^{65}Zn was substituted for a small fraction (0.19 Ci%) of the ^{58}Co to compensate for water-cooled reactors. Radionuclides with <0.05% of total activity were omitted.

[d]Based on the actinide composition given for TRU waste at a representative fuel reprocessing plant (Table 4.72 on p. 4.7.5 in Ref. 11). The ratios of plutonium and curium nuclides ($^{238}Pu/^{240}Pu$ and $^{242}Cm/^{244}Cm$) are assumed to be the same as in the spent fuel being reprocessed. The other actinides given in Table 4.72 (Ref. 11) were taken to be ^{241}Am. A density of 0.6 g/cm^3 as assumed (Tables A.2 and A.3 in Ref. 12).

[e]Estimates derived from values given in Table 13, p. 51 of Ref. 12; in tables on pp. 1 and 7 in Ref. 10 (^{238}U in TRU waste); and in Fig. 8.1 of this report (for ^{3}H, ^{14}C, and ^{99}Tc).

8.5 REFERENCES

1. R. L. Andersen, L. R. Cooley, T. J. Beck, and C. S. Strauss, Institutional Radioactive Wastes, NUREG/CR-0028 (March 1978).

2. T. J. Beck, L. R. Cooley, and M. R. McCampbell, Institutional Radioactive Wastes - 1977, NUREG/CR-1137 (October 1979).

3. National Low-Level Waste Management Program, The 1980 State-By-State Assessment of Low-Level Radioactive Wastes Shipped to Commercial Disposal Sites, EGG/LLWMP-11T, EG&G Idaho, Inc. (June 1982).

4a. National Low-Level Waste Management Program, The 1981 State-By-State Assessment of Low-Level Radioactive Wastes Shipped to Commercial Disposal Sites, DOE/LLW-15T, EG&G Idaho, Inc. (December 1982).

4b. National Low-Level Waste Management Program, The 1982 State-By-State Assessment of Low-Level Radioactive Wastes Shipped to Commercial Disposal Sites, DOE/LLW-27T, (December 1983).

5. U.S. Department of Energy, Western New York Nuclear Service Center Study, TID-28905-3, Volume 2 (of two volumes), Companion Report, pp. (3–43) and (3–44) (December 1978).

6. A. G. Croff, ORIGEN2 — A Revised and Updated Version of the Oak Ridge Isotope Generation and Depletion Code, ORNL-5621 (July 1980).

7. Institutional/Industrial Low-Level Radioactive Waste Projection Scenario (Revised in 1982), National Low-Level Waste Management Program, EG&G Idaho, transmittal letter [E. A. Jennrich (EG&G) to A. H. Kibbey (ORNL)] dated March 30, 1984.

8. National Low-Level Waste Management Program, Massachusetts Low-Level Radioactive Waste Management Survey, DOE/LLW-19T, EG&G Idaho (March 1983).

9. U.S. Department of Energy, Solid Waste Information Management System (SWIMS), computerized data base maintained at EG&G Idaho; data for CY 1983, computer output with transmittal letter [E. A. Jennrich (EG&G) to A. H. Kibbey (ORNL)] dated March 30, 1984.

10. H. M. Batchelder, Radioactive Waste Management Information — 1979 Summary and Record-to-Date, IDO-10054(79), EG&G Idaho (July 1980).

11. U.S. Department of Energy, Technology for Commercial Radioactive Waste Management, DOE/ET-0028, Vol. 2 (May 1979).

12. J. D. Colton, et al., Transport of Low Specific Activity Radioactive Materials, NUREG/CR-2440, SRI International (December 1981).

9. DECONTAMINATION AND DECOMMISSIONING OF POWER REACTORS AND ASSOCIATED FUEL CYCLE FACILITIES

C. W. Forsberg

9.1 SUMMARY

At the end of their useful lives, power reactors and associated fuel cycle facilities must be decommissioned. Table 9.1 shows the quantities of radioactive waste expected from these operations for the various fuel cycle facilities. Figures 9.1 and 9.2 illustrate diagramatically the distributions for the respective wastes from pressurized-water reactor (PWR) and boiling-water reactor (BWR) decommissioning operations.

Except for uranium enrichment plants and power reactors (Table 9.2), the volume and radioactivity of wastes from decommissioning are small compared to those from normal operations. Consequently, discussion in this chapter focuses on decommissioning of uranium enrichment plants and power plants, with only brief coverage of decommissioning wastes from other fuel cycle operations. In terms of total radioactive waste from power plants and the associated fuel cycle (operations and decommissioning), the only decommissioning activity generating significant waste quantities is power plant decommissioning.

There are significant uncertainties in all estimates of decommissioning wastes, because of variations in time between the end of normal operations and decommissioning, the technology available, and the legal constraints involved. The estimates reported here are conservative and are based on current technology. Future waste volumes from decommissioning could be as low as 20% of the volumes indicated herein. The total radionuclide content of such wastes would not change.

Radionuclides decay over time; hence, there is an incentive to delay decommissioning operations to allow radiation levels to decrease. The quantities of radionuclides from decommissioning listed in this chapter are those that existed at the time the facility was shut down. Radioactivity of nuclides in wastes shipped to disposal sites would actually be lower, because of radioactive decay.

Table 9.1. Wastes from decommissioning fuel cycle facilities[a]

Facility type	Typical capacity	Decommissioning wastes[b], m^3	References
Uranium conversion[c]	10,000 MTIHM/year	LLW: 1260 (1,200 kg U)	1
Uranium enrichment by gaseous diffusion	8.75×10^6 SWU	LLW: 12,700	
Uranium enrichment by gas centrifuge	8.75×10^6 SWU	LLW: 20,700	
Fuel fabrication	1,000 MTIHM/year	LLW: 1100 (150 kg U)	2
Reprocessing plant	1,500 MTIHM/year	LLW: 3100 (4000 Ci)	3
		TRU: 4600 (2.5×10^7 Ci)	

[a]Assuming a 40-year lifetime for all facilities and a 75% capacity factor for reactors.

[b]Volume of waste to disposal site, including packaging.

[c]Decommissioning data for solvent-extraction type of facility. Operating data for direct-fluorination facility. Operating wastes include wastes in lagoons. Sludge not included in decommissioning wastes.

ORNL DWG 85-398

DECOMMISSIONING OF 1-MW(e) CAPACITY OF PRESSURIZED WATER REACTOR (IMMEDIATE DECOMMISSIONING)

LOW LEVEL WASTE

PACKAGED WASTE VOLUME = 1 51E+1 m^3/MW(e)
TOTAL ACTIVITY = 1 06E+2 Ci/MW(e)

	Waste Class		
	A	B	C
Volume m^3/MW(e)	1 49E+1	1 82E-1	1 45E-2
Activity Ci/MW(e)	3 22E+1	4 43E+1	2 92E+1
Specific Activity Ci/m^3			
C-14	0 0	0 0	0 0
Ni 59	4 7E-5	7 2E-3	5 5E-1
Nb-94	2 4E 8	5 2E-5	4 0E-3
Tc-99	0 0	0 0	0 0
Co 60	3 6E-1	7 7E+1	7 4E+2
Ni 63	5 7E-3	1 2E+0	9 1E+1
Sr 90	4 9E-5	1 7E-3	0 0
Y-90	4 9E-5	1 7E-3	0 0
Cs 137	5 4E-2	2 1E+0	0 0
Ba-137m	5 1E-2	2 0E+0	0 0
$T_{1/2}$<5 yr	1 7E+0	1 6E+2	1 2E+3
Total	2 2E+0	2 4E+2	2 0E+3

GREATER THAN CLASS C LOW-LEVEL WASTE

Packaged Waste Volume = 1 13E-1 m^3/MW(e)
Total Activity = 4 07E+3 Ci/MW(e)

	GREATER THAN CLASS C
Volume m^3/MW(e)	1 13E-1
Activity Ci/MW(e)	4 07E+3
Specific Activity Ci/m^3	
C-14	0 0
Ni-59	1 0E+1
Nb-94	7 2E-2
Tc-99	0 0
Co-60	1 3E+4
Ni-63	1 6E+3
Sr-90	0 0
Y-90	0 0
Cs-137	0 0
Ba-137m	0 0
$T_{1/2}$<5 yr	2 2E+4
Total	3 6E+4

Fig. 9.1. Pressurized-water reactor decommissioning wastes per 1 MWe capacity.

ORNL DWG 85-397

DECOMMISSIONING OF 1 MW(e) CAPACITY OF BOILING WATER REACTOR (IMMEDIATE DECOMMISSIONING)

LOW LEVEL WASTE

PACKAGED WASTE VOLUME = 1 64E+1 m^3/MW(e)
TOTAL ACTIVITY = 2 53E+2 Ci/MW(e)

	Waste Class		
	A	B	C
Volume m^3/MW(e)	1 60E+1	3 23E-1	4 59E-2
Activity Ci/MW(e)	1 11E+1	3 81E+1	2 04E+2
Specific Activity Ci/m^3			
C 14	2 6E-6	1 0E-3	1 7E-1
Ni 59	1 1E-5	6 4E-3	1 0E+0
Nb 94	2 2E 8	1 4E-5	2 5E-3
Tc 99	3 3E 8	3 2E-7	5 1E-5
Co 60	2 7E 1	4 0E+1	5 5E+2
Ni 63	1 6E-3	8 6E-1	1 4E+2
Sr 90	5 4E-4	5 1E-2	0 0
Y 90	5 4E-4	5 1E-2	0 0
Cs 137	2 5E-2	3 5E+0	0 0
Ba137m	2 4E-2	3 3E+0	0 0
$T_{1/2}$<5 yr	3 8E-1	7 0E+1	3 8E+3
Total	6 9E-1	1 2E+2	4 5E+3

GREATER THAN CLASS C LOW-LEVEL WASTE

Packaged Waste Volume = 4 07E-2 m^3/MW(e)
Total Activity = 5 30E+3 Ci/MW(e)

	GREATER THAN CLASS C
Volume m^3/MW(e)	4 07E-2
Activity Ci/MW(e)	5 30E+3
Specific Activity Ci/m^3	
C-14	5 0E+0
Ni-59	3 0E+1
Nb-94	7 1E-2
Tc-99	1 5E-3
Co-60	1 6E+4
Ni-63	4 2E+3
Sr-90	0 0
Y-90	0 0
Cs-137	0 0
Ba-137m	0 0
$T_{1/2}$<5 yr	1 1E+5
Total	1 3E+5

Fig. 9.2. Boiling-water reactor decommissioning wastes per 1 MWe capacity.

Table 9.2. Typical volumes of operating and decommissioning wastes for nuclear facilities

Facility type[a]	Typical capacity	Operating wastes[b] (m^3)	Decommissioning wastes (m^3)
Uranium conversion	10,000 MTIHM/year	LLW: 18,000	LLW: 1,260
Uranium enrichment by gaseous diffusion	8.75×10^6 SWU/year	LLW: 8,000	LLW: 12,700
Uranium enrichment by gas centrifuge	8.75×10^6 SWU/year	LLW: 60,000	LLW: 20,700
Fuel fabrication	1,000 MTIHM/year	LLW: 99,000	LLW: 1,100
Pressurized-water reactor[c]	1000 MWe	LLW: 35,000	LLW: 15,100 >Class C waste = 113
Boiling-water reactor[c]	1000 MWe	LLW: 60,000	LLW: 16,400 >Class C waste = 41
Reprocessing plant	1,500 MTIHM/year	LLW: 54,000 TRU: 91,000	LLW: 3,100 TRU: 4,600

[a]Assume 40-year lifetime.
[b]Wastes generated during operating lifetime of the facility.
[c]Assume 75% capacity factor.

Most decommissioning wastes are radioactive because of surface contamination. If better methods to decontaminate surfaces are found, the volumes of radioactive decommissioning wastes would decrease significantly.

Some of the "radioactive" wastes discussed here may not be considered radioactive wastes in the future. To date, the Nuclear Regulatory Commission (NRC) has not developed a standard to define what is radioactive waste and what is not: i.e., a "de minimus" rule. Some wastes are treated as radioactive if they came from a facility that has had radioactive materials. If a definition of "what is radioactive?" is agreed on and equipment is developed that can easily measure very low radioactivity levels; the waste volume from decommissioning can be reduced.

9.2 DECOMMISSIONING OF URANIUM CONVERSION, FUEL FABRICATION, AND REPROCESSING FACILITIES

The wastes from decommissioning of uranium conversion, fuel fabrication, and reprocessing facilities are listed in Table 9.1. These numbers are based on a series of decommissioning studies done by Pacific Northwest Laboratory (PNL) for the NRC.[1-3]

A common feature of these facilities is that the quantity of waste from decommissioning is only a small fraction of the waste produced by normal operations (Table 9.2); hence, uncertainties in decommissioning volumes has little impact on total waste projections.

9.3 DECOMMISSIONING OF URANIUM ENRICHMENT FACILITIES

9.3.1 Introduction

No detailed studies of decommissioning of uranium enrichment plants have been conducted, but some limited studies have been done on decommissioning of some components of uranium enrichment plants. Environmental Impact Statements (EIS) provide much of the basic information needed to estimate decommissioning wastes for a facility. In the United States, most uranium enrichment plants use the gaseous diffusion process, but a gas centrifuge facility is currently under construction. Both processes are discussed herein. A third method of uranium

enrichment, the Atomic Vapor Laser Isotopic Separation (AVLIS) process, is also being researched. It is not discussed here due to the lack of information available and the uncertainties in the process.

9.3.2 Gaseous Diffusion Decommissioning Wastes

Estimates were made of the wastes generated by plant decommissioning per separative work units (SWU) produced by the plant in its operational lifetime. For these calculations, a plant lifetime of 40 years was assumed. Table 9.3 gives the results of these calculations. The quantities of radioactive wastes shown in the table are based upon the quantities of materials needed to construct an 8.75×10^6 SWU/year gaseous diffusion add-on to the Portsmouth Gaseous Diffusion Plant.[4]

Under current regulations, any metal that has been in contact with uranium is considered low-level radioactive waste. This results in some unique situations. A piece of metal which has had contact with uranium but has been decontaminated to perhaps 1-ppm uranium is considered to be low-level radioactive waste, while virgin metal with a few ppm uranium from the natural iron ore is considered to be nonradioactive. Because of this, new regulations are currently being written by the NRC to define some numerical criteria for radioactive waste, such as a few ppm uranium. For the calculations in this report, it is assumed that these new regulations apply.

Because of the high metal content of a gaseous diffusion plant, the plant has considerable scrap value when decommissioned if the scrap can be sold as clean scrap. Conventional decontamination procedures, such as washing, cannot assure decontamination because of the difficulty of measuring residual radioactivity left in cracks and crevices of the metal. As a consequence, the only practical method for large-scale decontamination of uranium and daughter products is to smelt the metal and remove the uranium with slag fluxing. The residual radioactivity of the metal can then be easily determined with a single measurement. Both laboratory- and industrial-contaminated scrap smelting experience exists.[5-7]

Experiments have shown that nickel, stainless steel, copper, and iron can be easily decontaminated.[7] For example, in 1958 (prior to the NRC regulations), 5400 mt of ferrous scrap highly contaminated with

Table 9.3. Radioactive decommissioning wastes from a gaseous diffusion plant

Material[a]	Decommissioning waste treated[a]	Ratio of waste generated to waste treated[b]	LLW slag produced[b] (t)	LLW per unit product[c] (t/SWU)
Steel	1.818E5	0.1	1.818E4	5.19E-5
Copper	4.909E3	0.1	4.909E2	1.40E-6
Aluminum	5.727E3	1.0	5.727E3	1.64E-5
Nickel	4.818E3	0.1	4.818E2	1.38E-6
Monel	3.730E2	0.1	2.727E1	7.79E-8
Fiberglass	5.591E2	1.0	5.591E2	1.60E-6
Concrete[d]		0.0		
Total			2.547E4	7.28E-5

[a]Waste materials are based on the materials needed for construction of an 8.75E6 SWU add-on gaseous diffusion plant. t = metric ton.

[b]Based on decontamination by smelting; waste generated is slag from melting furnace.

[c]Waste calculations are based on a 40-year plant lifetime.

[d]Concrete excluded from waste calculations; surface decontamination assumed sufficient.

normal uranium was decontaminated by smelting to yield 550 mt of ingots with less than 3 ppm uranium and a slag with 2.2% uranium. About 100 kg of slag were generated per metric ton of metal.[5] Uranium contamination levels at gaseous diffusion plants are much less, hence better decontamination should be possible. With current technology, as little as 20 kg of slag per ton of metal may be produced.[8] For this study, the proven, conservative estimate of 100 kg of slag per mt of metal will be used.

Aluminum is the only metal that cannot be decontaminated by smelting. Slag removes uranium from most molten metals because the uranium is preferentially converted to the oxide form and transferred to the oxide slag. However, aluminum will oxidize before uranium, hence slagging is not effective. Currently, there is no proven, economically viable aluminum decontamination procedure. Therefore, all aluminum is considered low-level contaminated waste.

For this study, it is assumed that reinforced concrete can be fully decontaminated. The concrete should never be in contact with the uranium. Since the concrete is several feet thick to support the heavy equipment in a facility, it is assumed that sandblasting or other surface treatments will effectively remove all contamination. The concrete does contain steel rebar, which is counted as part of the steel in the plant. For calculation purposes, the conservative number used for slag production plus the addition of this imbedded steel should more than compensate for any uncounted wastes generated by concrete decontamination procedures.

Using the quantities of slag generated per ton of metal decontaminated, we have calculated the metric tons of waste generated by decommissioning (column 4 in Table 9.3). A total of 7.28×10^{-5} t of low-level contaminated waste per SWU will be generated by plant decommissioning.

To determine waste volumes, some estimate of waste density is required. The slag is primarily CaO, with a density of 3.3 g/cm^3. The aluminum metal has a density of 2.7 g/cm^3. The actual density of the aluminum and fiberglass insulation depends upon how powerful a press is used to consolidate the wastes. An estimated density of 2.0 g/cm^3 is

used for these calculations, yielding a calculated waste volume of 3.64×10^{-5} m^3 per SWU from decommissioning operations.

9.3.3 Gas Centrifuge Decommissioning Wastes

Estimates were made of gas centrifuge facility wastes generated by decommissioning per SWU produced during the plant's lifetime, based on information from the EIS.[9] The results of these calculations are shown in Table 9.4. The plant is assumed to have a 40-year lifetime. The same methods of decontamination proposed for gaseous diffusion facilities are assumed here, and again the waste estimates are based upon the weights of materials used to construct the plant. Note that for decontaminated metals, the waste quantity is the weight of slag generated by smelter decontamination operations. It was assumed that all aluminum was discarded as LLW, since no methods currently are available to decontaminate the aluminum.

The calculations show that $\sim 1.18 \times 10^{-4}$ t of wastes are generated by decommissioning per SWU produced. About half of these wastes are uranium-containing slag mixtures. With special furnaces, the quantity of slag might be reduced by as much as a factor of 5. The slags contain primarily calcium oxide with a density of 3.3 g/cm^3, which, in the presence of air, slowly converts to calcium carbonate with a density of 2.7 g/cm^3. About half of these wastes are scrap aluminum that cannot economically be decontaminated. Most of the aluminum is in the form of small aluminum tubing, which can be crushed for waste disposal. An estimated density of 2 g/cm^3 is used for the total waste, yielding 5.9×10^{-5} m^3 of waste per SWU from decommissioning.

9.4 POWER REACTOR DECOMMISSIONING

At the end of their useful lives, reactors must be decommissioned. Since reactor decommissioning will produce >90% of the volume and radioactivity of wastes from decommissioning operations in the entire fuel cycle, detailed studies have been made.[10,11] A summary of the results of these studies is given in this document. All calculations are based on reactor decommissioning after 40 years of operation, with 30 full-power equivalent years of operation.

Table 9.4. Radioactive wastes from decommissioning a gas centrifuge plant

Material[a]	Decommissioning waste treated[a] (t)	Ratio of waste generated to waste treated[b]	LLW produced[b] (t)	LLW per unit product[c] (t/SWU)
Steel	209,000	0.1	20,909	5.97E-5
Aluminum	20,000	1.0	20,000	5.71E-5
Copper	3,909	0.1	391	1.11E-6
Zinc	169	0.1	17	4.86E-8
Concrete[d]				
Total			41,317	1.18E-4

[a]Waste materials are based on the materials needed for construction of a facility with capacity of 8.75E6 SWU/year. t = metric ton.

[b]Based on decontamination by smelting; waste generated is slag from melting furnace, except for aluminum which cannot be treated.

[c]Calculations based on a 40-year plant lifetime.

[d]Concrete excluded from waste calculations; surface decontamination assumed sufficient.

The wastes from reactor decommissioning can be categorized by source, type, and radionuclide composition. The radioactive materials found in a reactor decommissioning operation come from two sources. In and near the reactor core, components are bombarded with neutrons from the reactor, causing some materials to become radioactive. Items irradiated by the reactor include: reactor internals, the pressure vessel, and nearby shielding walls. The characteristic feature of wastes from decommissioning of these items is that they are radioactive throughout. Such wastes are called activation wastes in this report. In contrast, all other radioactive components in a plant become radioactive through surface contamination by radioactive gases or liquids. During decommissioning operations, some of these materials can be made nonradioactive by appropriate surface decontamination technologies.

Two types of wastes are expected from reactor decommissioning operations: LLW and high-activity-activation wastes (HAAWs). High-activity-activation wastes are greater than Class C LLW, but have not been given an official category name by the NRC. The quantities and activity of these wastes are shown in Table 9.5 for PWRs and in Table 9.6 for BWRs. High-activity-activation wastes have high levels of radioactivity and contain significant concentrations of long-lived radionuclides such as ^{94}Nb and ^{59}Ni. Rules for disposal of HAAW have not yet been written by the NRC. In practice, the characteristics are similar to those of remote-handled transuranic (TRU) wastes. High-activity-activation wastes contain ~90% of the radioactivity from reactor decommissioning operations but are <1% of the waste volume. These wastes consist primarily of reactor internals from near the reactor core that have been irradiated by neutrons at high-flux levels for a long period of time. They contain elements which, under neutron irradiation, become long-lived radioactive isotopes.

The LLW from reactor decommissioning is further classified as activation wastes, contaminated wastes, and radioactive wastes. Activation wastes are reactor and building components near the reactor which were irradiated by neutrons and are radioactive throughout. Low-level activation wastes have lower levels of radioactivity and elemental compositions that result in the production of fewer long-lived radioisotopes.

Table 9.5. Burial volume and radioactivity (at time of shutdown) of wastes from decommissioning a 1175-MWe PWR

Waste type	Burial volume[a] (m^3)	Specific activity, Ci/m^3									
			Long-lived[b]				Short-lived[c]				
		Total	^{14}C	^{59}Ni	^{94}Nb	^{99}Tc	^{60}Co	^{63}Ni	^{90}Sr[d]	^{137}Cs[e]	<5 years[f]
					Class A/neutron-activated waste[g]						
Pressure vessel cylindrical wall	108(37)	1.8E+2		6.5E-3			1.5E+1	7.5E-1			1.6E+2
Vessel head	57(12.1)	1.7E-1		6.2E-6			1.4E-2	7.2E-4			1.5E-1
Vessel bottom	57(5.3)	1.8E-1		6.3E-6			1.5E-2	7.6E-4			1.6E-1
Upper core support assembly	11(1.5)	9.1E+0		3.0E-4	1.8E-6		3.3E-1	4.1E-2			5.5E-1
Upper support columns	11(1.4)	9.2E+0		2.5E-3	1.8E-5		3.3E+0	4.1E-1			5.3E+0
Guide tubes	17(1.9)	5.9E+0		1.7E-3	1.2E-5		2.1E+0	2.7E-1			3.5E+0
Biological shield concrete	707	3.0E+0		1.0E-4			5.7E-2	1.2E-2			2.9E+0
Reactor cavity lining	14(2)	7.1E-1		2.6E-5			6.0E-2	3.1E-3			6.6E-1
Subtotal	982	2.2E+1		8.5E-4	4.3E-7		1.8E+0	1.0E-1			2.0E+1
					Class A/contaminated waste[h]						
Plant components not listed	16,078	1.1E-1					4.7E-3		4.3E-5	4.7E-2	1.0E-2
Subtotal	16,078	1.1E-1					4.7E-3		4.3E-5	4.7E-2	1.0E-2
					Class A/radioactive waste[i]						
Evaporator bottoms	62(51)	2.1E+2					6.8E+1			2.1E-1	1.5E+2
Evaporator bottoms	128(104)	4.2E+0					1.4E+0			4.2E-3	2.8E+0
Evaporator bottoms	76(62)	8.2E-1					2.6E-1			8.2E-4	5.5E-1
Dry solid waste	195	2.1E+0					9.0E-2		8.4E-4	9.0E-1	2.0E-1
Subtotal	461	3.1E+1					9.6E+0		3.6E-4	4.1E-1	2.1E+1
Total Class A waste	17,521	2.2E+0		4.7E-5	2.4E-8		3.6E-1	5.7E-3	4.9E-5	5.4E-2	1.7E+0

Table 9.5 (continued)

Waste type	Burial volume[a] (m^3)	Specific activity, Ci/m^3									
		Total	Long-lived[b]				Short-lived[c]				
			^{14}C	^{59}Ni	^{94}Nb	^{99}Tc	^{60}Co	^{63}Ni	^{90}Sr[d]	^{137}Cs[e]	<5 years[f]
Class B/neutron-activated waste[g]											
Upper core barrel	6(0.4)	1.7E+2		4.7E-2	3.3E-4		6.0E+1	7.3E+0			1.0E+2
Lower core forging	31(4.7)	8.1E+1		2.3E-2	1.7E-4		2.9E+1	3.6E+0			4.7E+1
Miscellaneous internals	23(4.6)	8.7E+1		2.4E-2	1.7E-4		3.2E+1	4.0E+0			5.2E+1
Subtotal	60	9.2E+1		2.6E-2	1.9E-4		3.3E+1	4.2E+0			5.4E+1
Class B/contaminated waste[h]											
None											
Class B/radioactive waste[i]											
Spent resins	57(46)	7.3E+2					2.3E+2			7.0E-1	4.8E+2
Used particulate filters	9(63)	5.6E+2					1.8E+2			5.6E-1	3.8E+2
Dry solid waste	88	6.0E+0					4.5E-1		4.2E-3	4.5E+0	1.0E+0
Subtotal	154	3.0E+2					9.4E+1		2.4E-3	2.9E+0	2.0E+2
Total Class B waste	214	2.4E+2		7.2E-3	5.2E-5		7.7E+1	1.2E+0	1.7E-3	2.1E+0	1.6E+2
Class C/neutron-activated waste[g]											
Upper core grid plate	14(0.6)	1.7E+3		4.7E-1	3.5E-3		6.4E+2	7.7E+1			1.0E+3
Lower support columns	3(0.4)	3.3E+3		9.3E-1	6.7E-3		1.2E+3	1.5E+2			2.0E+3
Subtotal	17	2.0E+3		5.5E-1	4.0E-3		7.4E+2	9.1E+1			1.2E+3
Class C/contaminated waste[h]											
None											
Class C waste/radioactive waste[i]											
None											
Total Class C waste	17	2.0E+3		5.5E-1	4.0E-3		7.4E+2	9.1E+1			1.2E+3

Table 9.5 (continued)

Waste type	Burial volume[a] (m^3)	Specific activity, Ci/m^3									
			Long-lived[b]				Short-lived[c]				
		Total	^{14}C	^{59}Ni	^{94}Nb	^{99}Tc	^{60}Co	^{63}Ni	^{90}Sr[d]	^{137}Cs[e]	<5 years[f]
		Greater than Class C/neutron-activated waste[g,j]									
Lower core barrel	91(5.4)	7.2E+3		2.0E+0	1.4E-2		2.6E+3	3.2E+2			4.2E+3
Thermal shields	17(1.3)	8.6E+3		2.4E+0	1.7E-2		3.1E+3	3.8E+2			5.0E+3
Core shroud	11(1.6)	3.1E+5		8.7E+1	6.3E-1		1.1E+5	1.4E+4			1.9E+4
Lower grid plate	14(0.5)	4.0E+4		1.1E+1	7.9E-2		1.4E+4	1.8E+3			2.3E+4
Total greater than Class C waste	133	3.6E+4		1.0E+1	7.2E-2		1.3E+4	1.6E+3			2.2E+4

[a]Numbers in parentheses are volume of waste in container when significantly different from volume of package to be buried. The NRC waste classification system is based on volumes in parentheses for certain cases.

[b]Long-lived radionuclides as used as a basis for waste classification in 10 CFR 61. Note: concentrations herein based on total package volume to be buried; in particular cases, waste classification based on volume of waste in package (volume in parentheses).

[c]Short-lived radionuclides as used as a basis for waste classification in 10 CFR 61. Note: concentrations herein based on total package volume to be buried; in particular cases, waste classification based on volume of waste in packages (volume in parentheses).

[d]Curies per cubic meter of ^{90}Sr; in addition, for each curie of ^{90}Sr, there are 1.0 curies of its daughter, ^{90}Y.

[e]Curies per cubic meter of ^{137}Cs; in addition, for each curie of ^{137}Cs, there are 0.946 curies of its daughter, ^{137m}Ba.

[f]Total of all radionuclides with half-lives <5 years, excluding daughters of listed isotopes.

[g]Neutron-activated wastes are reactor components irradiated with neutrons and hence radioactive throughout.

[h]Contaminated wastes are primarily plant components which are radioactive because the surfaces of the components are contaminated with radioactive materials. Volumes are based on current technology and economics. With improved technology, many of these wastes could be decontaminated.

[i]Radioactive wastes are from waste processing systems and efforts to decontaminate the plant for decommissioning. They include significant quantities of cleaning agents.

[j]These wastes are too radioactive for conventional LLW disposal under 10 CFR 61 regulations.

Table 9.6. Burial volume and radioactivity (at time of shutdown) of wastes from decommissioning a 1155-MWe BWR

Waste type	Burial volume[a] (m^3)	Specific activity, Ci/m^3									
		Total	Long-lived[b]				Short-lived[c]				
			^{14}C	^{59}Ni	^{94}Nb	^{99}Tc	^{60}Co	^{63}Ni	^{90}Sr[d]	^{137}Cs[e]	<5 years[f]
Class A/neutron-activated waste[g]											
Control rod guide tubes	4(0.5)	2.5E+1	9.3E-4	5.5E-3	1.4E-5	2.8E-7	3.0E+0	7.8E-1			2.1E+1
Core support plate	11(2.4)	5.9E+1	2.2E-3	1.3E-2	3.1E-5	6.5E-7	7.0E+0	1.8E+0			5.0E+1
Reactor vessel wall	21.6(8.0)	3.7E+1	6.7E-4	1.5E-3		2.7E-5	6.7E-1	1.7E-1			3.6E+1
Sacrificial wall	90	2.0E+0	7.0E-5	6.4E-5		2.2E-6	3.4E-2	7.6E-3			2.0E+0
Subtotal	126.6	1.4E+1	3.8E-4	1.6E-3	3.2E-6	4.8E-6	8.7E-1	2.2E-1			1.3E+1
Class A/contaminated waste[h]											
Reactor vessel	493	2.0E+0					9.0E-1			6.5E-2	9.6E-1
Main condensor	1,820	2.1E-1					9.9E-2			7.1E-3	1.0E-1
Piping and valves	4,565	4.8E-1					2.1E-1			1.6E-2	2.4E-1
Reactor building equipment	1,894	5.2E-1					2.4E-1			1.7E-2	2.5E-1
Turbine-generator building equipment	4,426	1.6E-1					7.5E-2			5.4E-3	8.0E-2
Radwaste and control building equipment	1,431	2.2E+0					1.0E+0			7.6E-2	1.1E+0
Reactor building structural surfaces	1,941	4.4E-2					1.1E-2	1.3E-4	5.7E-4	6.8E-3	1.9E-2
Turbine-generator building structural surfaces	215	2.3E-2					5.8E-3	6.8E-5	3.0E-4	3.6E-3	1.0E-2
Radwaste and control building structural surfaces	440	9.4E-2					2.3E-2	2.8E-4	1.2E-3	1.4E-2	4.1E-2
Subtotal	17,225	5.0E-1					2.2E-1	2.3E-5	9.9E-5	1.7E-2	2.4E-1

Table 9.6 (continued)

Waste type	Burial volume[a] (m^3)	Specific activity, Ci/m^3									
		Total	Long-lived[b]				Short-lived[c]				
			^{14}C	^{59}Ni	^{94}Nb	^{99}Tc	^{60}Co	^{63}Ni	^{90}Sr[d]	^{137}Cs[e]	<5 years[f]
Class A/radioactive waste[i]											
Concentrator bottoms	307	4.4E+0					1.9E+0			1.5E-1	2.1E+0
Concentrator bottoms	186	8.3E-1					3.8E-1			2.8E-2	4.0E-1
Solidified decontamination solutions	120	8.9E-1					4.1E-1			2.9E-2	4.3E-1
Filter sludges and resins	54	4.3E+0					1.9E+0			1.4E-1	2.0E+0
Dry solid wastes	468	1.4E+0					3.5E-1	4.1E-3	1.8E-3	2.2E-1	6.1E-1
Subtotal	1,135	2.2E+0					8.7E-1	1.7E-3	7.4E-3	1.4E-1	1.0E+0
Total Class A waste	18,487	6.9E-1	2.6E-6	1.1E-5	2.2E-8	3.3E-8	2.7E-1	1.6E-3	5.4E-4	2.5E-2	3.8E-1
Class B/neutron-activated waste[g]											
Steam separator assembly	10(1.5)	9.7E+2	3.6E-2	2.2E-1	5.0E-4	1.1E-5	1.2E+2	3.0E+1			8.2E+2
Fuel support pieces	5(0.7)	1.4E+2	5.2E-3	3.1E-2	7.4E-5	1.5E-6	1.7E+1	4.3E+0			1.2E+2
Subtotal	15	7.0E+2	2.6E-2	1.6E-1	3.6E-4	8.0E-6	8.7E+1	2.1E+1			5.9E+2
Class B/contaminated waste[h]											
None											
Class B/radioactive waste[i]											
Concentrator bottoms	148	2.1E+2					9.7E+1			7.1E+0	1.1E+2
Dry solid waste	210	7.2E+0					1.7E+0	2.0E-2	9.0E-2	1.1E+0	3.1E+0
Subtotal	358	9.4E+1					3.9E+1	2.0E-2	9.0E-2	3.6E+0	4.7E+1
Total Class B waste	373	1.2E+2	1.0E-3	6.4E-3	1.4E-5	3.2E-7	4.0E+1	8.6E-1	5.1E-2	3.5E+0	7.0E+1

Table 9.6 (continued)

Waste type	Burial volume[a] (m^3)	Specific activity, Ci/m^3									
		Total	Long-lived[b]				Short-lived[c]				
			^{14}C	^{59}Ni	^{94}Nb	^{99}Tc	^{60}Co	^{63}Ni	^{90}Sr[d]	^{137}Cs[e]	<5 years[f]
			Class C/neutron-activated waste[g]								
Control rods and in-core instruments	15(2.5)	1.3E+4	4.7E-1	2.8E+0	6.7E-3	1.4E-4	1.5E+3	3.8E+2			1.1E+4
Jet pump assemblies	14(0.8)	1.4E+3	5.3E-2	3.1E-1	7.4E-4	1.6E-5	1.7E+2	4.5E+1			1.2E+3
Top fuel guide	24(0.3)	1.3E+3	4.6E-2	2.8E-1	6.6E-4	1.4E-5	1.5E+2	3.9E+1			1.1E+3
Subtotal	53	4.5E+3	1.7E-1	1.0E+0	2.5E-3	5.1E-5	5.5E+2	1.4E+2			3.8E+3
			Class C/contaminated waste[h]								
None											
			Class C/radioactive waste[i]								
None											
Total Class C waste	53	4.5E+3	1.7E-1	1.0E+0	2.5E-3	5.1E-5	5.5E+2	1.4E+2			3.8E+3
			Greater than Class C waste[g,j]								
Core shroud	47(4.1)	1.3E+5	5.0E+0	3.0E+1	7.1E-2	1.5E-3	1.6E+4	4.2E+3			1.1E+5

[a]Numbers in parentheses are volume of waste in container when significantly different from volume of package to be buried. The NRC waste classification system is based on volumes in parentheses for certain cases.

[b]Long-lived radionuclides as used as a basis for waste classification in 10 CFR 61. Note: concentrations herein based on total package volume to be buried; in particular cases, waste classification based on volume of waste in package (volume in parentheses).

[c]Short-lived radionuclides as used as a basis for waste classification in 10 CFR 61. Note: concentrations herein based on total package volume to be buried; in particular cases, waste classification based on volume of waste in packages (volume in parentheses).

[d]Curies per cubic meter of ^{90}Sr; in addition, for each curie of ^{90}Sr, there are 1.0 curies of its daughter, ^{90}Y.

[e]Curies per cubic meter of ^{137}Cs; in addition, for each curie of ^{137}Cs, there are 0.946 curies of its daughter, ^{137m}Ba.

[f]Total of all radionuclides with half-lives <5 years, excluding daughters of listed isotopes.

[g]Neutron-activated wastes are reactor components irradiated with neutrons and hence radioactive throughout.

[h]Contaminated wastes are primarily plant components which are radioactive because the surfaces of the components are contaminated with radioactive materials. Volumes are based on current technology and economics. With improved technology, many of these wastes could be decontaminated.

[i]Radioactive wastes are from waste processing systems and efforts to decontaminate the plant for decommissioning. They include significant quantities of cleaning agents.

[j]These wastes are too radioactive for conventional LLW disposal under 10 CFR 61 regulations.

Contaminated wastes are power plant components with surface radioactivity that, for technical or economic reasons, cannot be fully decontaminated. For example, a significant fraction of the contaminated waste comes from the contaminated surface layers of concrete that are removed during decommissioning.

The third type of LLW waste is the radioactive waste generated by the decontamination of the equipment and operation of radwaste processing equipment. For example, the special solutions used to clean equipment are concentrated by evaporation and then solidified. Because these decontamination fluids are designed to selectively remove radionuclides from the plant, the radioactivity for these wastes per unit volume is much higher than for other types of LLW.

To determine the detailed radionuclide compositions of the wastes from reactor decommissioning, radioactive source terms are required. Studies indicate that five source terms adequately describe most decommissioning wastes.[10–14] These source terms are for: (1) stainless-steel activation wastes, (2) carbon steel activation wastes, (3) biological shield activation wastes (reinforced concrete), (4) corrosion product wastes, and (5) general radioactive contamination wastes. The source terms shown in Tables 9.7 and 9.8 are for time of reactor shutdown.

A typical reactor pressure vessel is 10–30 cm thick, made of carbon steel with a thin stainless-steel lining on the inside. Both components are bombarded by neutrons and become activated waste. Biological shield activation waste is from the reinforced concrete shield wall that surrounds the pressure vessel and shields the rest of the facility from gamma and neutron irradiation.

The other two source terms are for radioactive contamination away from the reactor core. Corrosion product wastes contain radioisotopes from two sources: leaky fuel elements and corrosion products that travel with the water through the reactor core and are activated. Corrosion products, such as those from stainless steel, have an elemental composition that is different from activation wastes because the mixtures of elements in materials such as stainless steel do not all corrode at the same rate.

Table 9.7. Reference waste compositions at time of shutdown for decommissioning a PWR

Isotope	Half-life	Stainless steel activation wastes	Carbon steel activation wastes	Concrete activation wastes[a]	Corrosion product activation wastes	General contamination
Ar-39	~265 y			1.14E-3		
Ca-41	80,000 y			2.01E-4		
Ca-45	165 d			1.05E-1		
Cr-51	27.7 d				2.4E-2	
Mn-54	300 d	2.6E-2	5.3E-2	4.83E-3	3.6E-2	1.4E-3
Fe-55	2.9 y	4.9E-1	8.2E-1	8.65E-1		2.2E-2
Fe-59	44.63 d	1.7E-2	3.1E-2		8.2E-3	8.7E-4
Co-58	72 d	5.7E-2	7.5E-3		4.6E-1	7.5E-3
Co-60	5.27 y	3.6E-1	8.5E-2	1.92E-2	3.2E-1	7.5E-2
Ni-59	75,000 y	2.8E-4	3.6E-5	3.42E-5		
Ni-63	100.1 y	4.5E-2	4.3E-3	4.02E-3		
Zn-65	245 d	4.5E-5				
Sr-89	55.55 d					1.2E-3
Sr-90	28.62 y					6.9E-4
Y-90	64.06 h					6.9E-4
Mo-93	~3500 y	1.4E-7	1.5E-6			
Nb-94	~20,000 y	2.0E-6				
Zr-95	64.0 d				5.6E-2	2.5E-4
Nb-95	35.1 d				5.6E-2	2.5E-4
Ru-103	39.35 d				2.6E-2	
Te-129m	33.6 d					3.1E-4
I-131	8 d					1.4E-2
Cs-134	2.062 y					1.2E-1
Cs-136	14 d					1.1E-3
Cs-137	30.17 y				1.2E-3	7.5E-1
Ce-141	32.5 d				6.6E-2	
Total		1.0	1.0	1.0	1.0	1.0

[a]Biological shield.

Table 9.8. Reference waste compositions at time of shutdown for decommissioning a BWR

Isotope	Half-life	Stainless steel activation wastes	Carbon steel activation wastes	Concrete activation wastes[a]	Corrosion product activation wastes	General contamination
C-14	5730 y	3.68E-5	1.84E-5	3.54E-5		
Cl-36	4.4E5 y			3.15E-7		
Ar-39	265 y			1.48E-3		
K-40	1.32E9 y			9.55E-6		
Ca-41	1.1E5 y			2.06E-4		
Ca-45	152 d			1.02E-1		
Cr-51	27.7 d	5.09E-1	4.77E-3	2.89E-3	2.1E-2	5.3E-2
Mn-54	300 d	2.98E-3	2.89E-2	2.50E-3	3.9E-1	7.2E-4
Fe-55	2.69 y	3.24E-1	9.13E-1	8.20E-1		3.7E-1
Fe-59	44.63 d	9.61E-3	2.57E-2	2.63E-2	2.5E-2	5.3E-4
Co-58	72 d	7.37E-3	4.06E-3	7.81E-4	9.3E-3	5.6E-3
Ni-59	75,000 y	2.23E-4	3.98E-5	3.23E-5		
Co-60	5.27 y	1.18E-1	1.77E-2	1.68E-2	4.7E-1	2.9E-1
Ni-63	100.1 y	3.07E-2	4.71E-3	3.83E-3		3.4E-3
Zn-65	245 d	1.13E-5	5.12E-9		6.1E-3	1.8E-2
Sr-89	55.55 d					2.0E-3
Sr-90	28.62 y					1.5E-2
Y-90	64.06 h					1.5E-2
Mo-93	3500 y	1.14E-7	2.56E-6	1.92E-6		
Nb-93m	14.6 y	4.74E-8	1.06E-6	7.94E-7		
Nb-94	~20,000 y	5.26E-7	2.26E-9			
Zr-95	64.0 d	4.95E-9	4.41E-7		4.0E-3	1.6E-4
Nb-95	35.1 d	4.21E-5	1.02E-6		4.0E-3	1.6E-4
Tc-99	4,200,000 y	1.12E-8	7.19E-7	1.06E-6		
Ru-103	39.35 d				2.3E-3	2.9E-4

Table 9.8 (continued)

Isotope	Half-life	Stainless steel activation wastes	Carbon steel activation wastes	Concrete activation wastes[a]	Corrosion product activation wastes	General contamination
Ru-106	368 d				2.8E-3	3.9E-4
Tc-129m	33.6 d					4.9E-4
I-131	8 d					1.5E-2
Cs-134	2.062 y				1.9E-2	8.8E-3
Cs-136	14 d					1.0E-4
Cs-137	30.17 y				3.4E-2	1.8E-1
Ba-137m	2.6 m					
Ce-144	284.3 d				8.1E-3	2.9E-4
Sm-151	90 y	7.44E-9		3.39E-4		
Eu-152	13.6 y			2.60E-3		

[a]Biological shield.

General radioactive contamination wastes are similar to corrosion product wastes, but they are located outside the primary reactor water circulation system, where the water chemistry differs from that in the primary water and different radioisotopes precipitate from the water onto plant surfaces.

Using the information in Tables 9.5–9.8, the generic source terms for decommissioning PWRs and BWRs were generated as shown in Figs. 9.1 and 9.2. These source terms include the radioactive composition at the time the reactor was shutdown. Included within the source terms is the important assumption that the reactor operated for 40 years at a 75% capacity factor. Because of the long operating history that was assumed, short-lived isotopes that could cause equipment contamination early in plant life have had sufficient time to decay to very low levels. Much of the contamination seen during reactor decommissioning is from operations during the last few years of plant operation.

9.5 REFERENCES

1. H. K. Elder, Technology, Safety and Costs of Decommissioning a Reference Uranium Hexafluoride Conversion Plant, NUREG/CR-1757 (October 1981).

2. H. K. Elder and D. E. Blahnik, Technology, Safety, and Costs of Decommissioning a Reference Uranium Fuel Fabrication Plant, NUREG/CR-1266 (October 1980).

3. K. J. Schneider et al., Technology, Safety, and Costs of Decommissioning a Reference Nuclear Fuel Reprocessing Plant, NUREG-0278 (October 1977).

4. Energy Research and Development Agency, Final Environmental Statement: Portsmouth Gaseous Diffusion Plant Expansion, Piketon, Ohio, ERDA-1549 (September 1977).

5. W. E. Shaw, Study for Disposal of Uranium-Contaminated Ferrous Scrap, NLCO-1110, Special (April 25, 1974).

6. R. H. Starkey et al., "Health Aspects of the Commercial Melting of Uranium-Contaminated Ferrous Metal Scrap," Industrial Hygiene Journal (April 1960).

7. P. B. Klevin and W. B. Harris, "Remelting May Permit Reclaiming Uranium Contaminated Scrap," Nucleonics, p. 94 (April 1956).

8. Personal communication, to C. W. Forsberg from George Copeland, M&C Division, Oak Ridge National Laboratory (July, 1979).

9. Energy Research and Development Administration, Final Environmental Impact Statement, Expansion of U.S. Uranium Enrichment Capacity, ERDA-1543, p. 8.1-4 (April 1976).

10. R. I. Smith, G. J. Konzek, and W. E. Kennedy, Jr., Technology, Safety, and Costs of Decommissioning a Reference Pressurized-Water Reactor Power Plant, NUREG/CR-0130 (June 1978).

11. H. D. Oaks, G. M. Holter, W. E. Kennedy, Jr., G. J. Konzek, Technology, Safety, and Costs of Decommissioning a Reference Boiling-Water Reactor Power Plant Station, NUREG/CR-0672 (June 1980).

12. E. S. Murphy, Technology, Safety, and Costs of Decommissioning a Reference Boiling-Water Reactor Power Station; Classification of Decommissioning Wastes, NUREG/CR-0672, Addendum 2 (September 1984).

13. E. S. Murphy, Technology, Safety, and Costs of Decommissioning a Reference Pressurized-Water Reactor, NUREG/CR-0130, Addendum 3 (September 1984).

14. J. C. Evans et al., Long-Lived Activation Products in Reactor Materials, NUREG/CR-3474 (August 1984).

ORNL/TM-8462
Dist. Category UC-70

INTERNAL DISTRIBUTION

1. C. W. Alexander
2. R. C. Ashline
3. L. H. Bell
4. J. E. Bigelow
5. J. O. Blomeke
6. W. D. Box
7-11. W. L. Carter
12. H. C. Claiborne
13. A. G. Croff
14. J. M. Fielden
15. C. S. Fore
16-20. C. W. Forsberg
21. R. W. Glass
22. H. W. Godbee
23. E. K. Johnson
24-28. A. H. Kibbey
29. J. A. Klein
30. R. E. Leuze
31. F. R. Mynatt
32. W. W. Pitt
33. T. Rhyne
34. J. W. Roddy
35. T. H. Row
36. B. Stair
37. M. G. Stewart
38. V. C. A. Vaughen
39. R. G. Wymer
40-41. Laboratory Records
42. Laboratory Records, RC
43. ORNL Patent Office
44. Central Research Library, Y-12

EXTERNAL DISTRIBUTION

45. M. J. Barainca, U.S. Department of Energy, Idaho Operations Office, P.O. Box 1662, 550 2nd Street, Idaho Falls, ID 83401

46. H. M. Batchelder, Westinghouse Electric Corporation, WIPP Project Office, P.O. Box 3090, 401 Canal Street, Carlsbad, NM 88220

47. R. H. Bauer, U.S. Department of Energy, Office of Civilian Radioactive Waste Management (RW), HQ, Washington, DC 20585

48. J. W. Bennett, U.S. Department of Energy, Office of Civilian Radioactive Waste Management (RW), HQ, Washington, DC 20585

49. E. F. Benz, Weston, 2301 Research Boulevard, Rockville, MD 20850

50. L. Boing, UNC-Nuclear Industries, P.O. Box 490, Richland, WA 99352

51. H. C. Burkholder, Pacific Northwest Laboratory, P.O. Box 999, Battelle Boulevard, Richland, WA 99352

52. D. Burnett, UNC-Nuclear Industries, P.O. Box 490, Richland, WA 99352

53. J. W. Cashwell, Sandia National Laboratory, P.O. Box 5800, Albuquerque, NM 87185

54. R. G. Clark, U.S. Department of Energy, Energy Information Administration (EI-53), Washington, DC 20585

55. B. M. Cole, Pacific Northwest Laboratory, Battelle Washington Operations Office, 2030 M Street, NW, Washington, DC 20036

56. W. R. Cornman, E. I. du Pont de Nemours & Co., Savannah River Laboratory, Aiken, SC 29808

57. R. N. Coy, UNC-Nuclear Industries, P.O. Box 490, Richland, WA 99352

58. P. A. Craig, U.S. Department of Energy, Richland Operations Office, P.O. Box 550, Richland, WA 99352

59. J. A. Detamore, Rockwell International, P.O. Box 464, Golden, CO 80401

60. J. E. Dieckhoner, U.S. Department of Energy, Office of the Assistant Secretary for Defense Programs (DP-122), Washington, DC 20545

61. R. L. Dintaman, Westinghouse Electric Corporation, WIPP Project Office, 401 Canal Street, Carlsbad, NM 88220

62. J. A. Disbrow, U.S. Department of Energy, Energy Information Administration (EI-53), Washington, DC 20585

63. L. R. Dodd, Pacific Northwest Laboratory, P. O. Box 999, Battelle Boulevard, Richland, WA 99352

64. P. F. X. Dunigan, U.S. Department of Energy, Richland Operations Office, P.O. Box 550, Richland, WA 99352

65. S. E. Everette, EG&G Idaho, Inc., P.O. Box 1625, Idaho Falls, ID 83415

66-70. W. A. Frankhauser, U.S. Department of Energy, Office of the Assistant Secretary for Defense Programs (DP-122), Washington, DC 20545

71. K. Golliher, U.S. Department of Energy, Albuquerque Operations Office, P.O. Box 5400, Albuquerque, NM 87115

72. W. Hartman, U.S. Department of Energy, Office of the Assistant Secretary for Defense Programs, DP-122, Washington, DC 20545

73. G. M. Holter, Pacific Northwest Laboratory, P.O. Box 999, Battelle Boulevard, Richland, WA 99352

74. E. Jennrich, EG&G Idaho, Idaho Falls, P.O. Box 1625, Idaho Falls, ID 83415

75. J. E. Johnson, Westinghouse Electric Corporation, WIPP Project, P.O. Box 40039, Albuquerque, NM 87916

76. F. M. Jungfleisch, Rockwell Hanford Operations, P.O. Box 800, Richland, WA 99352

77. E. L. Keller, U.S. Department of Energy, Oak Ridge Operations Office, P.O. Box E, Oak Ridge, TN 37831

78. R. A. Libby, Pacific Northwest Laboratory, P.O. Box 999, Battelle Boulevard, Richland, WA 99352

79. J. D. Mahler, U.S. Department of Energy, Oak Ridge Operations Office, P.O. Box E, Oak Ridge, TN 37831

80-84. E. F. Mastal, U.S. Department of Energy, Office of the Assistant Secretary for Nuclear Energy (NE-72), Washington, DC 20545

85. M. H. McFadden, U.S. Department of Energy, Albuquerque Operations Office, P.O. Box 5400, Albuquerque, NM 87115

86. J. M. McGough, U.S. Department of Energy, Albuquerque Operations Office, P.O. Box 5400, Albuquerque, NM 87115

87. R. W. McKee, Pacific Northwest Laboratory, P.O. Box 999, Battelle Boulevard, Richland, WA 99352

88. K. McKinley, Rockwell International, Rocky Flats Plant, P.O. Box 464, Golden, CO 80401

89. N. B. McLeod, E. R. Johnson Associates, Inc., 11702 Bowman Green Drive, Reston, VA 22090

90. C. E. Miller, U.S. Department of Energy, Richland Operations Office, P.O. Box 550, Richland, Washington 99352

91. J. Morley, U.S. Department of Energy, Albuquerque Operations Office, P.O. Box 5400, Albuquerque, NM 87115

92. M. G. O'Rear, U.S. Department of Energy, Savannah River Operations Office, P.O. Box A, Aiken, SC 29801

93. Y. M. Park, NUS Corporation, 910 Clopper Road, Gaithersburg, MD 20878

94-98. M. L. Payton, U.S. Department of Energy, Office of Civilian Radioactive Waste Management (RW-13), Washington, DC 20585

99. J. P. Thereault, U.S. Department of Energy, Office of the Assistant Secretary for Nuclear Energy (NE-72), Washington, DC 20585

100. M. G. White, U.S. Department of Energy, Albuquerque Operations Office, P.O. Box 5400, Albuquerque, NM 87115

101. Office of Assistant Manager for Energy Research and Development, DOE-ORO, Oak Ridge, TN 37831

102-419. Given distribution as shown in TIC-4500 under UC-70, Nuclear Waste Management.