GA–A22722

CONF-971065--

CENTRAL THOMSON SCATTERING UPGRADE ON DIII–D

RECEIVED
JAN 20 1998
OSTI

by
D.G. NILSON, T.N. CARLSTROM, C.L. HSIEH, B.W. STALLARD,
and R.E. STOCKDALE

DISTRIBUTION OF THIS DOCUMENT IS UNLIMITED

MASTER

NOVEMBER 1997

GENERAL ATOMICS

DISCLAIMER

This report was prepared as an account of work sponsored by an agency of the United States Government. Neither the United States Government nor any agency thereof, nor any of their employees, make any warranty, express or implied, or assumes any legal liability or responsibility for the accuracy, completeness, or usefulness of any information, apparatus, product, or process disclosed, or represents that its use would not infringe privately owned rights. Reference herein to any specific commercial product, process, or service by trade name, trademark, manufacturer, or otherwise does not necessarily constitute or imply its endorsement, recommendation, or favoring by the United States Government or any agency thereof. The views and opinions of authors expressed herein do not necessarily state or reflect those of the United States Government or any agency thereof.

DISCLAIMER

Portions of this document may be illegible electronic image products. Images are produced from the best available original document.

GA–A22722

CENTRAL THOMSON SCATTERING UPGRADE ON DIII–D

by
D.G. NILSON,† T.N. CARLSTROM, C.L. HSIEH, B.W. STALLARD,†
and R.E. STOCKDALE

†Lawrence Livermore National Laboratory

This is a preprint of a paper to be presented at the 17th IEEE/NPSS Symposium on Fusion Engineering, October 6–11, 1997, San Diego, California and to be published in the *Proceedings*.

Work supported by
the U.S. Department of Energy
under Contract No. DE-AC03-89ER51114

GA PROJECT 3466
NOVEMBER 1997

GENERAL ATOMICS

Central Thomson Scattering Upgrade on DIII–D*

D.G. Nilson,[a] T.N. Carlstrom,[b] C.L. Hsieh,[b] B.W. Stallard,[a] and R.E. Stockdale[b]
[a]Lawrence Livermore National Laboratory, P.O. Box 808, Livermore, California 94551-9900
[b]General Atomics, P.O. Box 85608, San Diego, California 92186-9784

Abstract — The existing 36 channel Thomson scattering system on the DIII–D tokamak measures the plasma temperature and density in the core region. However, with the recent interest in core peaked density profiles, coverage needs to be extended into the magnetic axis. This paper addresses the technical issues involved with extending the viewing region from a major radius of 194 cm to 165 cm. At least one of the existing seven core laser beams will be re-routed to probe the plasma horizontally instead of vertically. To do this, a rigid extension of the existing laser/collection optics tower will be built to route the laser to a nearby tangential port. A fiber bundle array from one of the two existing core plasma collection optics sets will be rotated to allow up to 10 of the 36 core channels to view along this new beam path. A new in-vessel absorbing glass laser dump must be developed since there are no appropriate laser beam exit ports. The close proximity of this laser dump to the viewing region presents stray light issues that must be resolved to allow for an accurate density calibration using Rayliegh scattering in argon gas.

INTRODUCTION

Recent advances in high-confinement discharges on the DIII–D Tokamak produce plasmas with steep density profiles in the core region. It is therefore crucial to determine the temperature and density profile all the way to the magnetic axis. Over 50% of the neutrons are produced from a major radius of 165cm to 195cm in these plasmas, which is outside of the measurement region of the current Thomson scattering system (Fig. 1). We are therefore extending this viewing region to a major radius of 165 cm (ρ=0) by re-routing one of the seven laser beams to probe horizontally across the plasma in front of the existing collection optics. Using the same collection optics and repositioning five of its fiber bundle viewing channels in the image plane, we can view the desired region with minimal hardware modifications. However, extending the viewing region changes the image quality and signal to noise levels. A new in-vessel beam dump will also be required which could increase stray light levels and have cooling and outgassing problems due to incident laser beam and plasma heating. Laser beam alignment also becomes more of an issue since the new laser path requires beam transport mirrors to be mounted near the top of a tall support tower which moves about 1 mm during magnet operations.

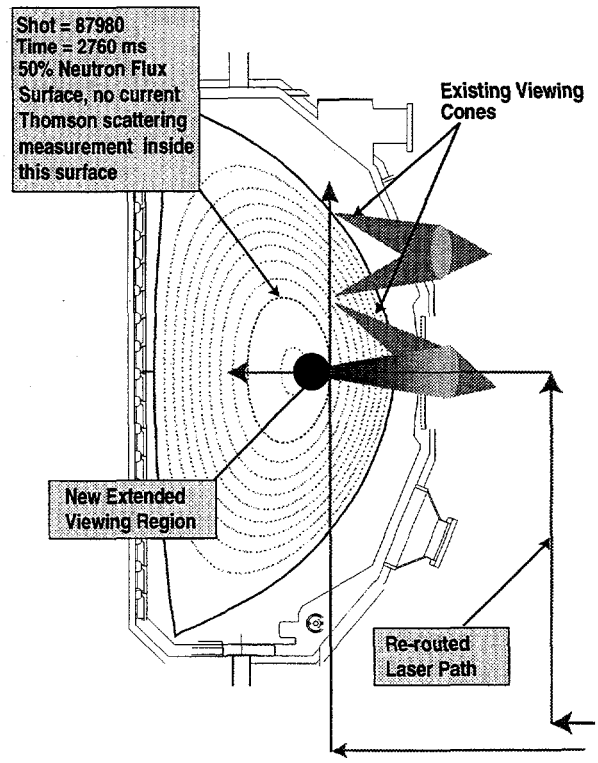

Fig. 1. Recent interest in peaked density plasmas require that Thomson scattering measurements be extended to the magnetic axis at 165 cm using a re-routed tangential laser beam.

SYSTEM DESIGN

The existing Thomson system uses seven closely packed laser beams that are transported 35 meters from a remote laser room to the DIII–D vessel with mirrors [1]. Each of these 1.06 μm laser beams operate nominally at 20 Hz with 1 J per pulse. We will tilt one of the seven beams at the laser room so that it will have diverged several centimeters from the other six beams when it reaches a granite optical table located just below the vessel. Here we will place a pick-off mirror to direct the beam up through the large aluminum tower currently used to support the two sets of existing collection optics. A second mirror located at the vessel midplane level directs the beam horizontally onto a platform containing position and energy monitoring instruments, a focussing lens, and an insertable beam dump. Finally, a third mirror turns the beam into a port entrance tube where it then enters the vessel and strikes a permanent beam dump on the far wall (see Fig. 2). This three-mirror combination orients the

*Work supported by U.S. Department of Energy under Contract No. DE-AC03-89ER51114.

electric field of the laser beam vertically to maximize the scattering signal towards the existing collection lens. The port entrance tube located between the vessel and the final turning mirror contains cone-shaped baffles which minimize the amount of stray light generated from scatter off of the beam transport mirrors. An additional structure must be extended off of the collection tower to rigidly support this port entrance tube. The exit end of the tube must be electrically isolated with a ceramic break from the vessel which has an electric potential of 5 kV. The tube must be mechanically isolated with a bellows due to the large vessel motions encountered during baking and plasma operations.

Typically, the Thomson scattering laser beams are allowed to exit the vessel without striking mirrors. Once out of the vessel, there is enough room to locate energy and position monitoring devices. With this horizontal system, the exit port on the outer vessel wall is not aligned down the exit beam path. Using an internal mirror to direct the beam into this port would create excessive scattered light during density calibrations. We must therefore construct an in-vessel beam dump on the inner wall of this exit port.

The beam dump design consists of two pieces of absorbing glass which are tilted such that light scattering from one glass surface will strike the opposing glass face and be absorbed rather than be scattered back into the collection optics (see Fig. 3). This is essentially the same dump design used on the existing systems, with the exception that it will be necessary to replace the tempered NG-4 absorbing glass with KG-2 glass due to its better thermal properties. The glass in the beam dump must withstand the 350°C DIII–D vessel baking temperature as well as 20 W/cm^2 heating from both the laser beam absorption and the plasma radiation. Recent absorption tests on KG-2 glass using a 20 Hz YAG laser with 1 J of energy running for 20 s caused no apparent damage. This glass also transmits the HeNe alignment laser far better than NG-4 glass, thus allowing a CCD camera to monitor the transmitted beam position through a port located behind the beam dump. We have found on previous Thomson scattering installations that once the laser beam is inside the vessel it has a significant halo associated with it, which seems to be generated by scatter off of the beam transport mirrors [2]. The halo intensity is sufficient to saturate the detectors during density calibrations, and therefore needs to be properly extinguished. The size of this halo is apparently defined by the location and diameter of the final baffle-cone aperture and the location of the final turning mirror. Given these locations for the tangential system, we expect a halo diameter of 6–8 cm. Fortunately, a beam dump that captures a halo of this size just fits into the available exit port. The limited beam dump size could restrict future additional horizontal laser beams, since the associated halo light would not fit into the dump and therefore produce excessive stray light.

On the existing Thomson systems, aperture size adjustments and viewing dump additions are usually required after initial hardware installations due to the excessively high stray light levels experienced during density calibrations. Since this tangential system upgrade has no exit baffles and the typical viewing dump made of

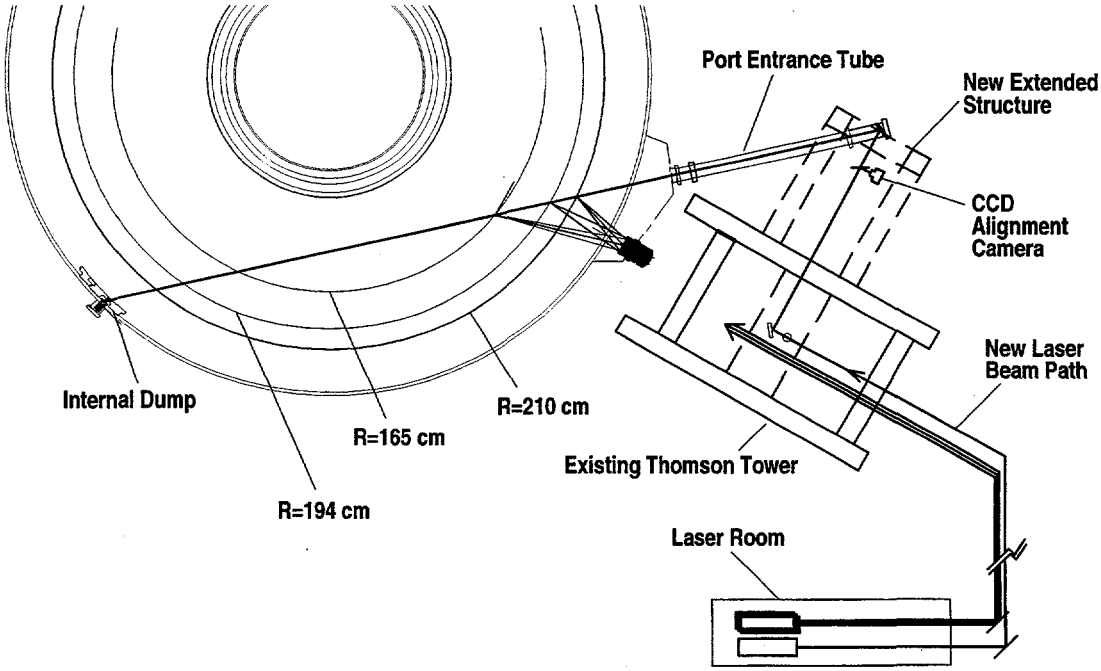

Fig. 2. The new tangential laser beam path will require an extension of the existing support tower as well as a new in-vessel beam dump.

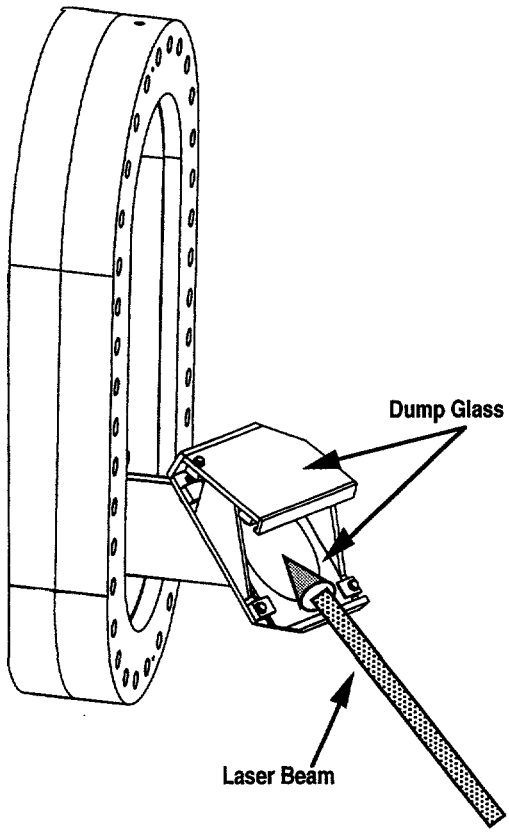

Fig. 3. A in-vessel beam dump consisting of two pieces of tilted absorbing glass will reside inside of a port tube. The dump will be large enough to capture the expected halo ring from a single laser beam.

stacked razor blades cannot be installed in this viewing region, little hardware can be added after the initial installation to reduce any stray light problems. We must therefore estimate the stray light levels with the proposed hardware to determine if a saturation problem might exist. We begin by assuming that the dump will reflect about 1×10^{-5} J of the incident 1 J laser beam. This should be an upper bound based on previous experience from using the existing Thomson system dumps [2]. This light will then scatter off of the vessel walls, some of which will strike the viewing region of the collection optics. Assuming a wall reflectivity of 10%, and uniform scattering profiles, we predict that the collection optics will receive 1×10^{4} photons. This should produce a stray light signal level just below the saturation threshold of the detection system. However, due to the uncertainty in this estimate we are proceeding with this dump design.

This upgrade requires that the original five-element collection optics be used to image the new laser scattering positions onto a modified fiber array. Because the laser now enters the vessel horizontally, the fiber bundles in the image plane must also be rotated 90° (see Fig. 4). Since these new scattering points are displaced out of the intended vertical object plane, an optical analysis was performed to determine the new image quality. We found that the RMS spot size increases to 450 μm from 250 μm by moving from the 195 cm to the 165 cm object position. There was no significant spot size change moving from the 195 cm to the 210 cm object position. The increased blur size is balanced by the larger image demagnification at the 165 cm position, thus the laser scattering image remains slightly smaller than the 1.5 mm wide fiber optic bundle used to collect it.

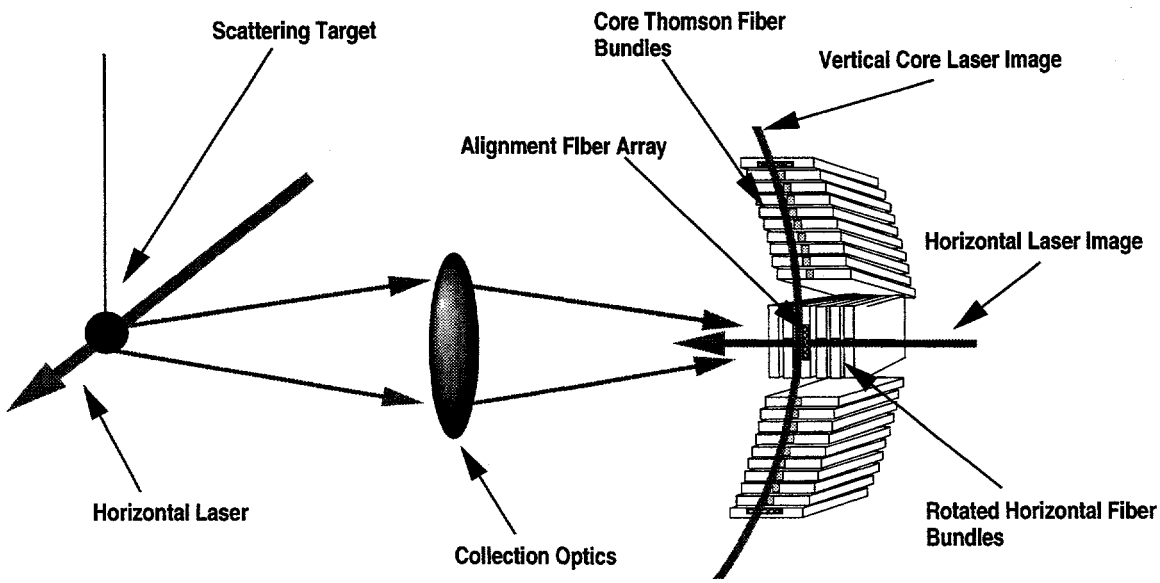

Fig. 4. The center fiber channels must be rotated horizontally to capture the scattering images from the new extended viewing region. A linear array of five fibers are placed at each end of the rotated bundles for alignment monitoring.

We will align the laser for this new upgrade by centering a HeNe alignment laser on two reference crosshairs. The first is located at the center of the port entrance tube and the second is placed on the back side of the beam dump inside of the vessel. The chosen YAG laser will first be made co-linear to this pre-aligned HeNe laser and then verified during daily operations by viewing the two laser beam positions on the CCD cameras located in front of the port entrance tube and on the back side of the beam dump (Fig. 2). The vertical position of the fiber bundle array in the collection optics image plane is verified by viewing scattered light from the HeNe alignment laser as it strikes an insertable target (see Fig. 4). This target is dropped into place on the optical axis at a major radius of 194 cm. The fiber bundle array stack is then adjusted to center the scattered light image from the target onto a linear array of five fibers. During operations, the target is removed and the scattered 1 μm signal from the plasma is then monitored by this linear fiber array.

Since this new tangential system requires that the laser be transported to the vessel midplane through a tall support tower, we were concerned with the tangential and radial tower motion during a shot. We recently measured this motion using a HeNe laser mounted to a nearby concrete wall. The beam was directed towards a pair of mirrors mounted on the tower, which then returned the beam to a quad-cell detector located next to the laser head. We found that the tower moves about 1 mm radially and tangentially due to the main centerpost magnet fluctuations. However, we found this large motion occurs outside of the plasma event time window and would therefore not effect our measurement. This is verified by the existing Thomson system which does not observe any significant tangential tower motion during a plasma event.

ACKNOWLEDGMENTS

The authors wish to thank Robert Gibson, Robin Snider, Jim Deboo, Ron Ellis and Gary Rolens for their technical assistance in this design.

REFERENCES

[1] T.N. Carlstrom, *et al.*, Rev. Sci. Instrum. **63**, 4901 (1992).

[2] D.G. Nilson, *et al.*, Rev. Sci. Instrum. **68** (1), (1997), pp 704-707.