DRAFT CONF-7910150--1

NEW DEVELOPMENTS IN ON-LINE ISOENZYME MONITORING FOR USE IN CLINICAL DIAGNOSTICS*

William D. Bostick, Mark S. Denton, and Stanley R. Dinsmore

Chemical Technology Division
Oak Ridge National Laboratory
Oak Ridge, Tennessee 37830

MASTER

To be presented at the International Liquid Chromatography Symposium II: Biological and Biomedical Applications, held in Boston, Massachusetts on October 11 and 12, 1979.

DISCLAIMER

This book was prepared as an account of work sponsored by an agency of the United States Government. Neither the United States Government nor any agency thereof, nor any of their employees, makes any warranty, express or implied, or assumes any legal liability or responsibility for the accuracy, completeness, or usefulness of any information, apparatus, product, or process disclosed, or represents that its use would not infringe privately owned rights. Reference herein to any specific commercial product, process, or service by trade name, trademark, manufacturer, or otherwise, does not necessarily constitute or imply its endorsement, recommendation, or favoring by the United States Government or any agency thereof. The views and opinions of authors expressed herein do not necessarily state or reflect those of the United States Government or any agency thereof.

By acceptance of this article, the publisher or recipient acknowledges the U.S. Government's right to retain a nonexclusive, royalty-free license in and to any copyright covering the article.

*Research sponsored by the Division of Biomedical and Environmental Sciences, U.S. Department of Energy under contract W-7405-eng-26 with the Union Carbide Corporation.

DISTRIBUTION OF THIS DOCUMENT IS UNLIMITED

DISCLAIMER

This report was prepared as an account of work sponsored by an agency of the United States Government. Neither the United States Government nor any agency Thereof, nor any of their employees, makes any warranty, express or implied, or assumes any legal liability or responsibility for the accuracy, completeness, or usefulness of any information, apparatus, product, or process disclosed, or represents that its use would not infringe privately owned rights. Reference herein to any specific commercial product, process, or service by trade name, trademark, manufacturer, or otherwise does not necessarily constitute or imply its endorsement, recommendation, or favoring by the United States Government or any agency thereof. The views and opinions of authors expressed herein do not necessarily state or reflect those of the United States Government or any agency thereof.

DISCLAIMER

Portions of this document may be illegible in electronic image products. Images are produced from the best available original document.

NEW DEVELOPMENTS IN ON-LINE ISOENZYME MONITORING FOR USE IN CLINICAL DIAGNOSTICS

William D. Bostick, Mark S. Denton, and Stanley R. Dinsmore

Chemical Technology Division
Oak Ridge National Laboratory
Oak Ridge, Tennessee 37830

INTRODUCTION

Recently we introduced a system for the selective, continuously referenced on-line photometric monitoring of isoenzymes separated by anion-exchange chromatography (1,2). The effluent from the column (containing the separated isoenzymes) is mixed with reagent (substrate and cofactors for the enzymes) and passes through a delay coil, in which reaction product accumulates. Prior to passage through the spectrophotometer, the effluent stream is split; half is directed to the reference cell of the spectrophotometer and half to the sample cell. An enzymatic microreactor is placed in the sample stream prior to the sample cell. This microreactor contains immobilized indicator enzymes which link the accumulated reaction product of the isoenzymes in the effluent stream with the generation of a photometrically detectable product. Because this product appears only in the sample cell and because endogenous light-absorbing constituents pass equally through both sample and reference cells of the spectrophotometer, response is highly selective and nonspecific light absorption is effectively blanked.

We have used this system for the determination of the isoenzymes of creatine kinase (CK; EC 2.7.3.2) and lactate dehydrogenase (LD; EC 1.1.1.27); both of these enzymes have molecular forms found

predominantly in heart tissue and are diagnostic of heart damage. The indicator enzymes immobilized onto the microreactor were hexokinase (HK) and glucose-6-phosphate dehydrogenase (GPDH) for CK determination [which links the CK reaction product (ATP) to the production of NADPH] (1,2):

$$\text{Creatine phosphate} + \text{ADP} \xrightarrow{\text{CK}} \text{creatine} + \text{ATP} \qquad (1)$$

$$\text{ATP} + \text{D-glucose} \xrightarrow{\text{HK}} \text{ADP} + \text{D-glucose-6-phosphate} \qquad (2)$$

$$\text{D-glucose-6-phosphate} + \text{NADP} \xrightarrow{\text{GPDH}} \text{NADPH} + \text{D-glucose-}\delta\text{-lactone-6-phosphate} \qquad (3)$$

and diaphorase for LD determination [which links the oxidation of LD reaction product (NADH) to the reduction of an indicator "dye"] (2):

$$\text{Lactate} + \text{NAD}^+ \rightleftharpoons \text{pyruvate} + \text{NADH} + \text{H}^+ \qquad (4)$$

$$\text{NADH} + \text{H}^+ + \text{diaphorase} - \text{FAD} \longrightarrow \text{NAD}^+ + \text{diaphorase} - \text{FADH}_2 \qquad (5)$$

In order to regenerate the indicator enzyme, the reduced flavoprotein is in turn linked to a redox "dye":

$$\text{diaphorase} - \text{FADH}_2 + \text{dye (oxidized)} \longrightarrow \text{diaphorase} - \text{FAD} + \text{dye (reduced)} \qquad (6)$$

In equation 3, the reaction may be monitored by the difference in molar absorptivity between $NADP^+$ and NADPH at 340 nm. In equation 6, the overall reaction is monitored by the difference in absorbance of oxidized and reduced indicator "dye." Therefore, the redox indicator 2-6-dichlorophenolindophenol allowed monitoring in the visible spectral region (550-650 nm) where interference by endogenous light-absorbing species is less than that for monitoring in the near uv.

Here we present, in a preliminary manner, additional systems for the selective, on-line detection of isoenzymes in chromatographic column effluents.

The CK reaction product, ATP, (equation 1) may be monitored by the overall firefly bioluminescence reaction (3):

$$\text{ATP} + \text{luciferin} \xrightarrow[\text{Mg}^{2+}]{\text{luciferase}} \text{adenyl luciferin} \qquad (7)$$

$$\text{adenyl luciferin} + O_2 \longrightarrow \text{adenyl oxyluciferin} + \underline{\text{light}} \qquad (8)$$

The reaction produces its own light emission, thus no external source is required and there is no nonspecific background signal to require referencing.

Lastly, we investigate the use of a flow-through electrochemical cell substituted for an enzymatic microreactor in the continuously referenced detection of LD isoenzymes. Half of the effluent stream, containing NADH reaction product, passes through a reticulated vitreous carbon electrode, poised at +0.75 to +0.95 V (vs Ag/AgCl), while half passes through a matched-flow "dummy" side with no applied potential. A reproducible portion of the NADH (e.g., $\geq$70%) in the active side is reoxidized to NAD, thus producing a difference in optical signal between the sample and reference cells of a spectrophotometer monitoring 340 nm.

MATERIALS AND METHODS

Enzymes. CPK Isotrol (containing the 3 isoenzymes of CK) and LDH Isotrol (containing the 5 isoenzymes of LD) were obtained from Sigma Chemical Co. (St. Louis, MO 63178). These products were diluted

6-fold more than recommended and used as markers for identification of isoenzymes. Additional single isoenzyme markers were used for LD: LD1 (No. 42722, from pig heart) and LD5 (No. 42723, from rabbit muscle) were obtained from Calbiochem (La Jolla, CA 92037), and LD2 (No. L-3757, from human red blood cells) was obtained from Sigma. Luciferase, combined with the substrate luciferin, was obtained from the following suppliers: LUMIT PM and LUMIT HS from LUMAC Inc. (Westlake Village, CA 91361) and Pico-Zyme F from Packard (Downers Grove, IL 60515).

Samples. Authentic sera samples from patients referred for CK isoenzyme determination were provided to us by a local hospital. The samples were assayed for CK isoenzymes by electrophoresis on agarose gel, and aliquots were frozen for later analysis in our laboratory.

Reagents. Buffer and cofactors for the bioluminescent assay of CK were prepared 2-fold concentrated in order to give the reaction concentrations described in Table 1 after mixing with an equal volume of column effluent. The complete reagent was prepared by the addition of 10 ml of buffer-cofactor mixture per vial of LUMIT PM or LUMIT HS reagent, or 4 ml per vial of Packard Pico-zyme F. This results in an incubation concentration of luciferin-luciferase of ∿75% of that recommended by the enzyme reagent manufacturer (cf. Fig. 7).

The LD reagent is prepared as described in reference 2, with the exception that no redox indicator is added. When mixed with column effluent, reaction concentrations are: 50 mmol/liter Li-ℓ-lactate, 100 mmole/liter 2-amino-2-methyl-1,3-propanediol buffer (pH 8.5), and 3.5 mmole/liter of NAD^+.

Table 1. Buffer and cofactor mixture for bioluminescent assay of creatine kinase

Constituent	Reaction concentration mol/liter
Imidazole Acetate (buffer, pH 7.4)	0.05
Mercaptoethanol	0.01
Na_4EDTA	5×10^{-4}
Mg^{2+} Acetate	0.01
Creatine Phosphate	0.01
Adenosine Diphosphate (ADP)	5×10^{-5}

Eluents. CK isoenzymes were separated by a linear gradient of 10-60% of solvent B in solvent A in 15 minutes at 3 ml/min column flow. Solvent A was 0.03 mole/liter tris (hydroxymethyl) methylamine, TRIS, adjusted to pH 7.4 with acetic acid, and solvent B was 1 molar acetic acid adjusted to pH 7.4 with lithium hydroxide. For chromatographic conditions, see appropriate figure captions.

LD isoenzymes were separated using a gradient composed of (A) 0.02 mole/liter TRIS buffer, adjusted to pH 7.9 with HCl, and (B) buffer with 0.5 mole/liter NaCl added. For chromatographic conditions, see appropriate figure captions.

Columns. All separations were performed on a 30 cm x 0.46 cm (ID) stainless steel (ss) column (Waters Associates, Inc., Milford, MA 01757), slurry packed with SynChropak AX300 (SynChrom Inc., Linden, IN 47955). This 10 μm anion-exchange support is a macroporous spherical silica with a bonded polymeric layer of amine and is similar to the DEAE-Glycophase support (Corning Biological Products Dept., Medfield, MA 02052) used previously (2). Slurry packing was achieved by placing 4 g of support in a 75:25 mixture of chloroform/methanol (isopropanol has also been used), and pouring it into a stainless steel bomb equipped with a magnetic stirrer (to minimize settling of the slurry). The bomb is connected to a solvent inlet line and an outlet to an inverted column. Two M6000A pumps (Waters Associates) delivered the chloroform/methanol mixture to the bomb at a pressure of 5000 psi. The column prepared in this manner had very low backpressure; e.g., a column flow of 3 ml/min resulted in only 1800 psi.

Liquid Chromatography Instrumentation. The system for the detection of CK isoenzymes by bioluminescence assay (Figure 1), for the detection of LD isoenzymes with use of an electrochemical cell (Figure 2), and a system proposed for the simultaneous detection of CK and LD isoenzymes (Figure 3) have many similar features. In each system, gradient elution was achieved with use of a Waters model 660 solvent programmer controlling two Waters model 6000A pumps. While these pumps deliver the column effluent, a peristaltic pump (Polystaltic Pump, Buchler Instruments, Fort Lee, NJ 07024) was used to (a) deliver reagents at a defined flow rate; (b) aid in making a 50:50 split with the stream-splitter by pulling the solution to waste (Fig. 3); (c) equalizing the volumes of effluent and reagent prior to mixing; and minimizing reagent usage and reducing total system flow, thus maximizing residence time in the delay coil (Fig. 1). A syringe injection valve (Rheodyne Inc., model 7105, Berkeley, CA 94710) was used for all sample introduction. T-mixers used to mix column effluent with reagents were fabricated in house as shown in Figure 4A. The primary reaction (equation 1 for CK, equation 4 for LD) occurs in a temperature-controlled delay coil composed of 1.09 meters of capillary Teflon tubing (0.003 mm ID) inserted into a flask connected with a recirculating temperature bath.

Stream-splitters (Figs. 2 and 3) provide different split ratios and are made from 1/16 in. Teflon Tees. In the LD system (Fig. 2), the split occurs after incubation with reagents and the ratio (50:50) ensures effective background subtraction in the referenced spectrophotometer located downstream. In the CK system (Fig. 1), the split

Figure 1

ORNL DWG 79-1589

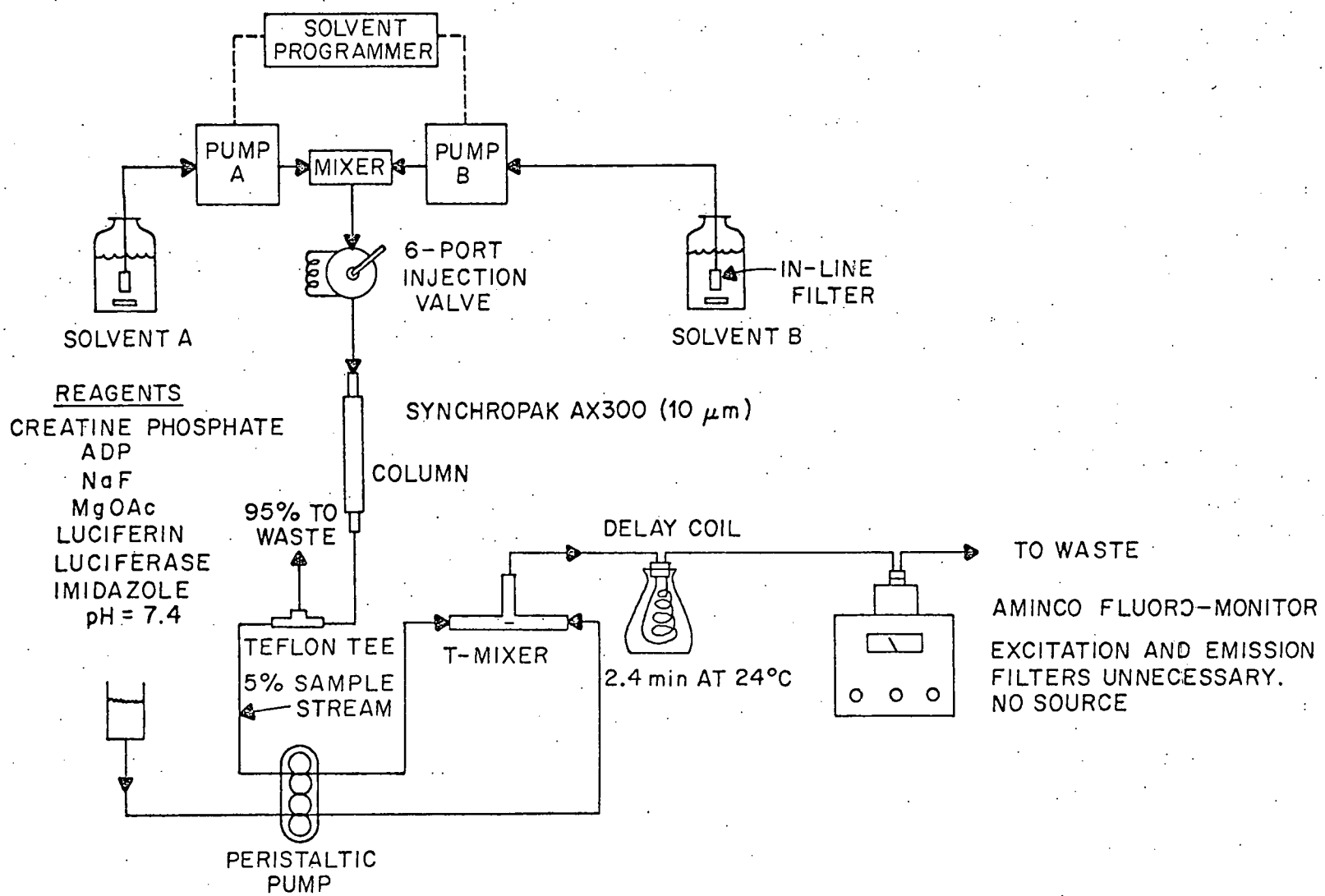

Figure 2

ORNL-DWG 78-17517R

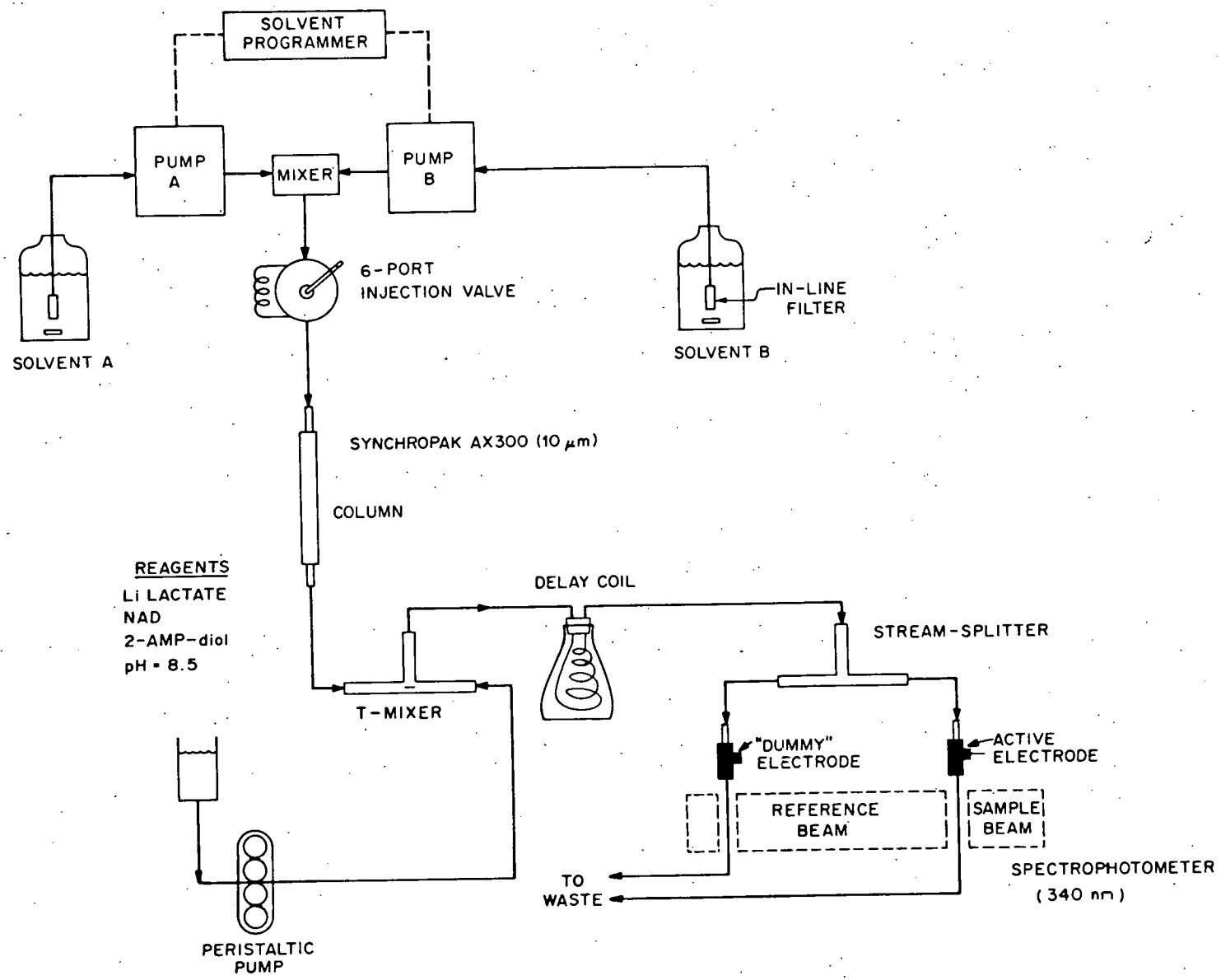

Figure 3

ORNL DWG 79-1339

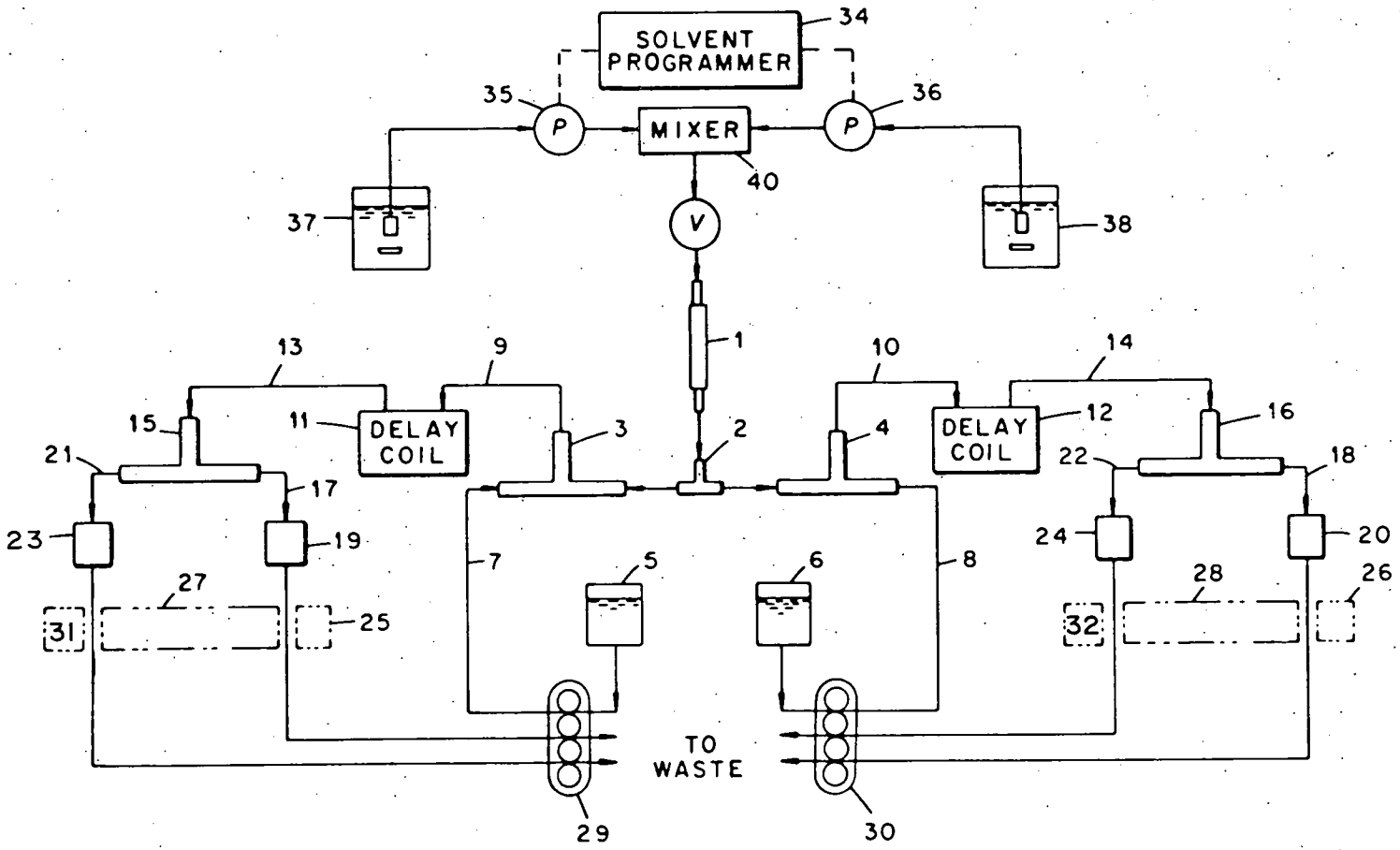

Figure 4A
& 4B

ORNL-DWG 79-1454

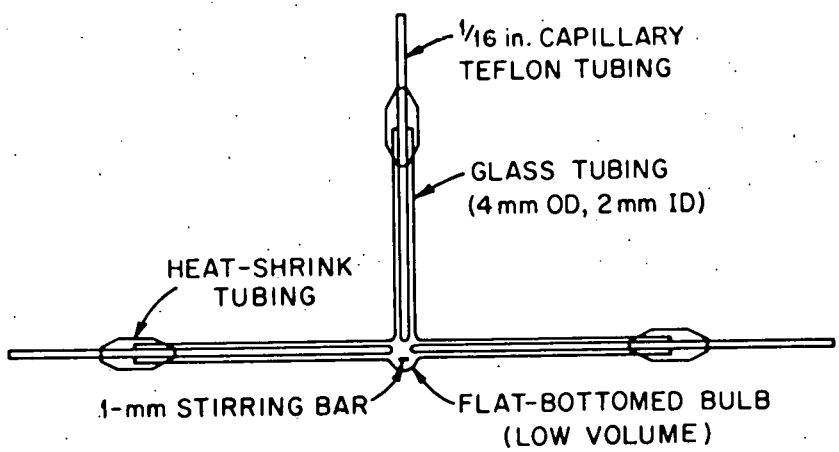

A. T-MIXER

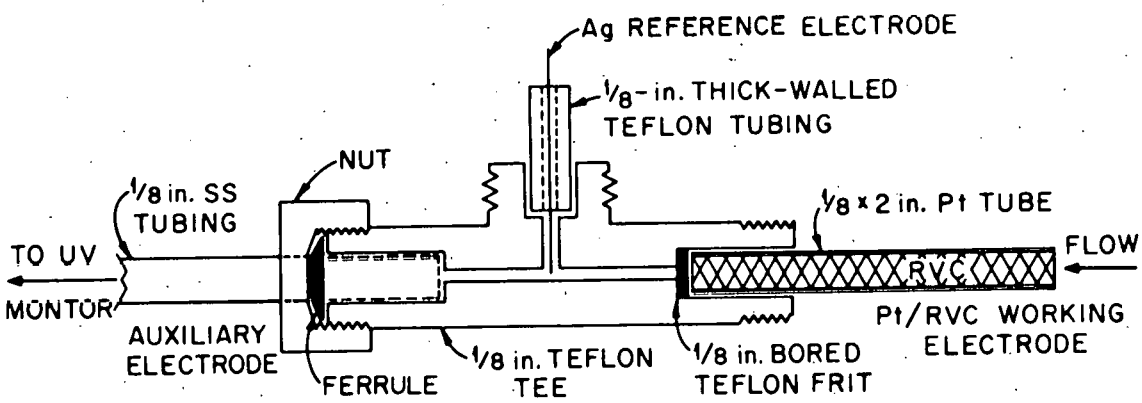

B. ELECTROCHEMICAL CELL

ratio is 95:5 and occurs prior to the addition of reagents at the T-mixer. The purpose here is to divert only a small fraction (5%) of the total column effluent (3 ml/min) as a reduced-flow stream for combination with reagents, allowing the remainder to exit to waste. This configuration allows (1) independent control of column flow rate, (2) independent control of the reduced-flow stream regardless of total effluent flow, (3) greatly reduced reagent consumption by combination with only a fraction of total effluent flow, and (4) increased residence time in the delay coil due to decreased flow rate.

The bioluminescence monitor (Fig. 1) is quite simple since no referencing is required. The detector is a flow-through fluorometer; no source or filters are required, thus eliminating major causes of drift and light loss. We used an Aminco Fluoro-Monitor (American Instruments, Silver Springs, MD 20910) with an 18 μl flow cell.

The LD monitor (Fig. 2) utilizes a stream-splitter for self referencing purposes. One side of this stream contains an "active" (i.e. applied potential) cell, whereas the other half contains a "dummy" (i.e. no applied potential) cell. Construction of the "active" cell is detailed in Figure 4B. The "dummy" cell serves only to equalize flow and dispersion, and differs from the "active" cell in that no silver reference electrode is provided and the reticulated vitreous carbon (RVC) electrode material is encased in nickel tubing rather than platinum. The RVC working electrode was fabricated by coring through a block of RVC (Fluorocarbon Co., Anaheim, CA 92083) with the sharpened end of a 1/8 in. x 2 in. platinum tube. Such RVC is produced by heating a reticulated polyurethane foam with a thermosetting resin impregnated on the surface. The RVC material used is

currently designated RVC 4 x 1-80 S, where 4 = grade or lbs/ft^3 for the raw polymer, x 1 = density or compression factor; 80 = number of pores per inch; and S indicates standard as opposed to activated material (4). The use of activated material could result in surface adsorption (4). A 1/8 in. porous Teflon frit (75 - 135 μm pore) is used to prevent passage of fines created in construction of the electrode cell from passing to the detector. Voltage across the "active" cell is controlled by use of an inexpensive potentiostat (Fig. 5).

The last component shown in Figs. 2 and 3 is a Waters 440 dual channel referenced photometric detector. This system permits simultaneous monitoring of two different streams (at the same or different wavelengths), each versus a flowing reference stream, thus being ideal for simultaneous monitoring of continuously referenced CK and LD isoenzymes as schematically illustrated in Figure 3. Similarly, for some of the development work for the LD system (Fig. 2), each side of the split stream was independently monitored at 340 nm versus static reference in order to evaluate splitting efficiency, flow characteristics, and electrooxidation efficiencies.

RESULTS AND DISCUSSION

A. Monitoring of CK Isoenzymes by Bioluminescence Assay

The reactions for bioluminescence assay of CK are given in equations 7 and 8. When purified reagents are used, the light-producing reaction is specific for ATP; no external source is required and there is no nonspecific background signal to require

Figure 5

ORNL-DWG 79-1453

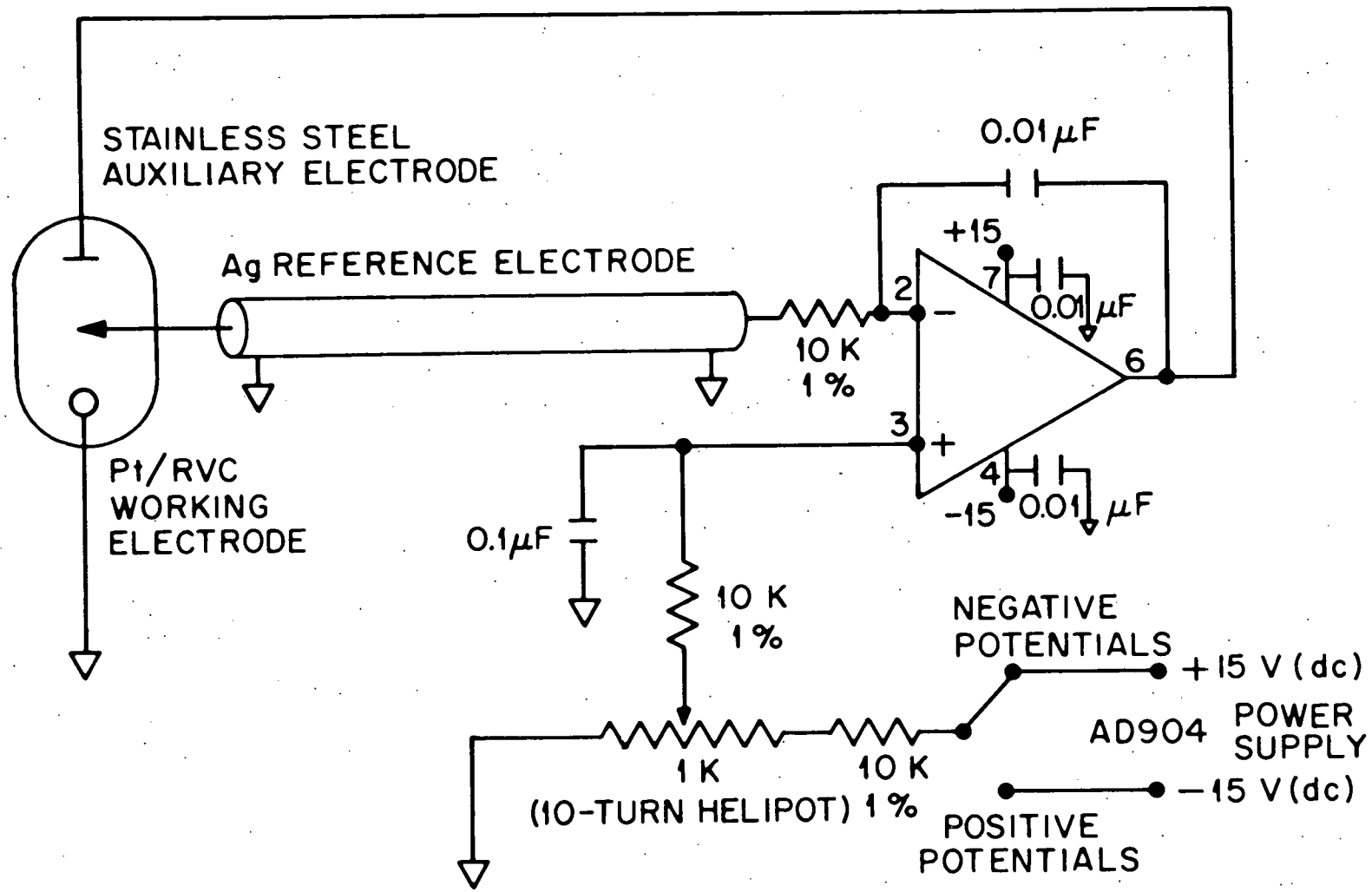

referencing. Bioluminescence (BL) is inherently very sensitive; picomoles of ATP can be determined with integrating photon counting techniques, and submicromolar concentrations are detectable in good quality flow fluorometers (see Fig. 6). Again with purified reagents, the light produced in the reaction shown in equation 8 remains relatively constant for several minutes, and thus luciferin-luciferase may be used for continuous monitoring of ATP-converting reactions such as that catalyzed by CK (5,6).

There is very slow or no turnover of luciferase enzyme (7); i.e. luciferase behaves more as a simple reactant than as a true catalyst. Thus there is little to be gained in immobilizing this enzyme for use in a microreactor, and the soluble enzyme is used instead. Figure 7 illustrates the effect of dilution of luciferin-luciferase reagent upon the observed bioluminescence response. Lundin et al. (6) likewise observed a diminution of response upon dilution of luciferin and luciferase.

CK has a broad pH optimum near pH 6.7, as determined by the HK--GPDH coupled reaction (equations 2-3) (8), whereas luciferase has a pH optimum between pH 7-8 (6, 9). When CK is coupled to luciferase, optimal BL response is anticipated at pH 7.2-7.4.

If one attempts to use the firefly bioluminescence reaction to monitor isoenzymes eluted from an anion exchange column by use of a salt gradient, one must consider the inhibitory effect of ions upon luciferase. Aledort et al. (10) report the inhibition of firefly luciferase by cations to occur in the following order: $Ca^{2+} > K^{+} > Na^{+} > Rb^{+} > Li^{+} >$ choline, and anion inhibition to occur in the

Figure 6

ORNL DWG 79-1452

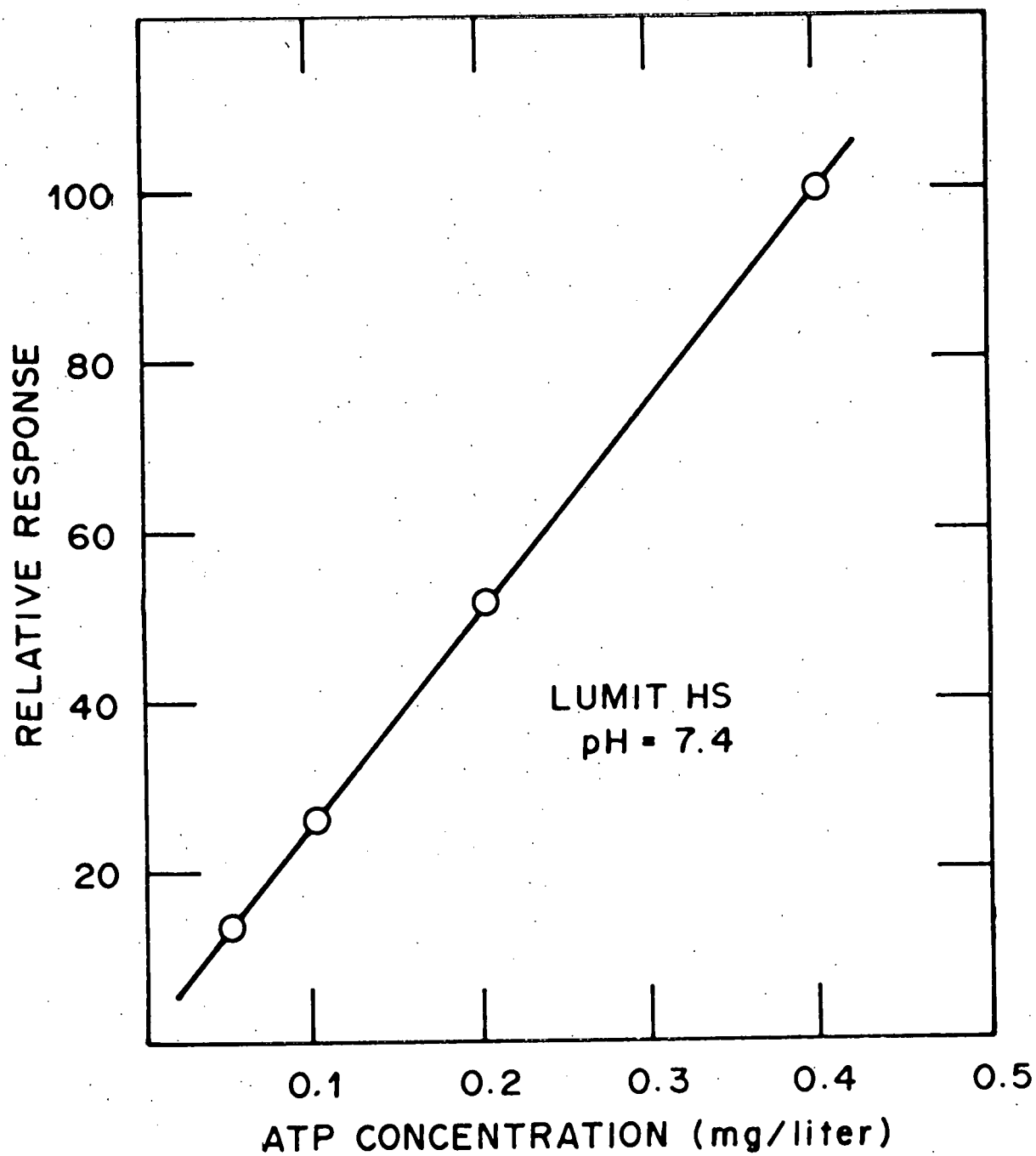

Figure 7

ORNL DWG 79-1451

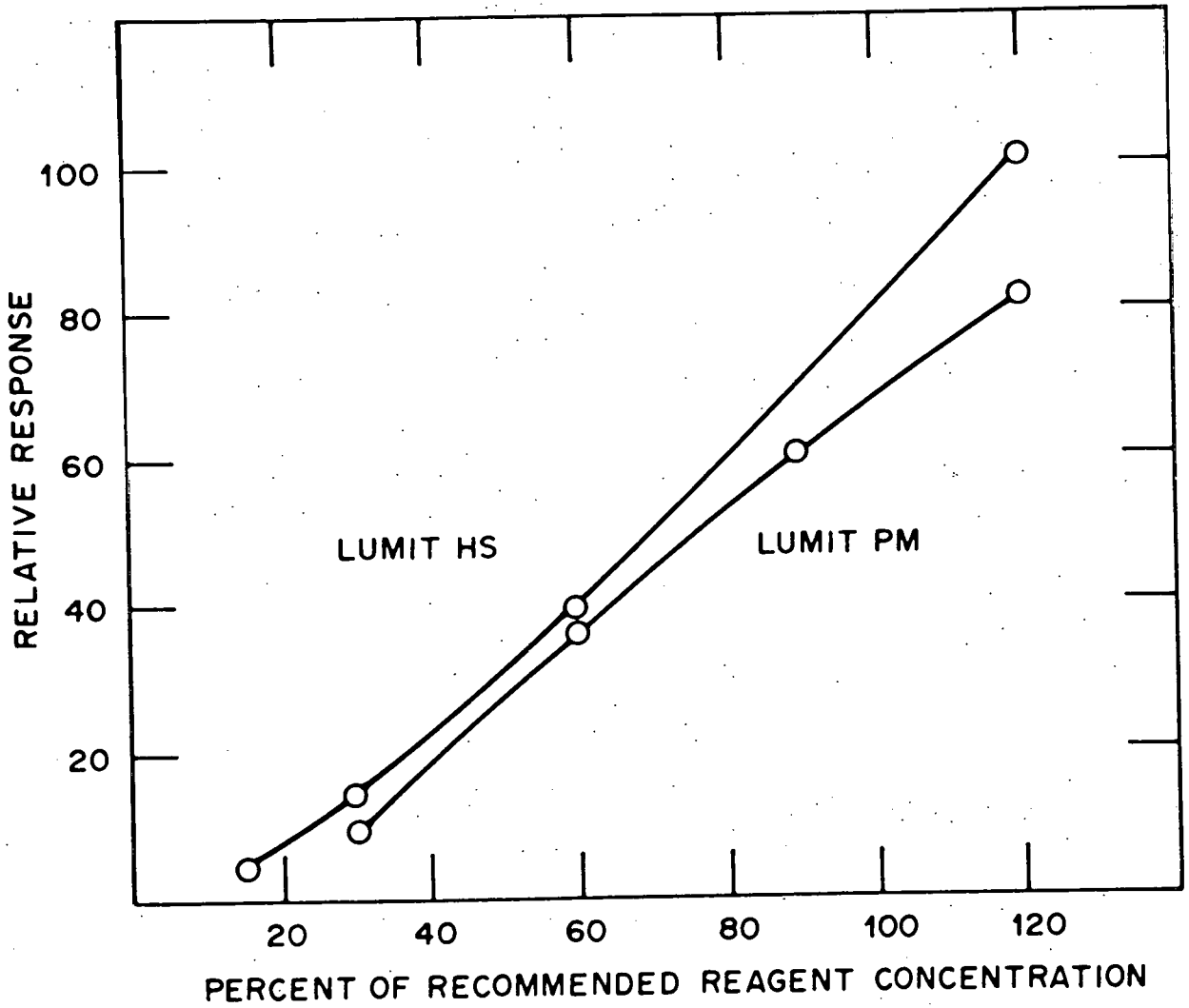

order $I^- > H_2PO_4^- > Br^- > ClO_3^- > Cl^- > F^- > HCO_3^- >$ acetate. Denburg and McElroy (11) report the order of anionic inhibition $SCN^- > I^- > NO_3^- > Br^- > Cl^-$, while Tobin et al. (9) report the order: $ClO_4^- > NO_3^- > Cl^- > SO_4^{2-}$.

Figure 8 illustrates the effect of selected salts on bioluminescence response. Sodium acetate has been used to elute CK isoenzymes from anion exchange columns, and is less corrosive to stainless steel than NaCl, thus prolonging the useful life of high-pressure pumping systems (12). Sodium acetate is slightly less inhibitory to luciferase than is NaCl. From the above literature data, the lithium cation and its counter ion acetate should be less inhibitory than those of sodium acetate or NaCl. This is confirmed in Figure 8.

In Figure 9, a CK isoenzyme control, containing MM (skeletal muscle), MB (myocardium) and BB (brain and smooth muscle) isoenzymes, is separated by anion exchange chromatography by use of a linear gradient of lithium acetate (0 - 0.6 M). See individual figures for chromatographic conditions. All three isoenzymes are clearly resolved in less than 20 minutes. The effluent flow from the column was 3 ml/min; a small fraction of this flow (0.16 ml/min) is diverted and mixed with an equal volume of luciferin-luciferase reagent, while the remainder goes to waste. In this manner, high resolution is retained while reagent consumption is minimized. The figure shows the relative response using two commercial luciferin-luciferase reagents under identical conditions; added substrates and modifiers are listed in Table 1. Figure 10 illustrates the chromatogram for a serum sample with an electrophoretically confirmed trace CK-MB isoenzyme from myocardial infarction.

Figure 8

ORNL DWG 79-1423

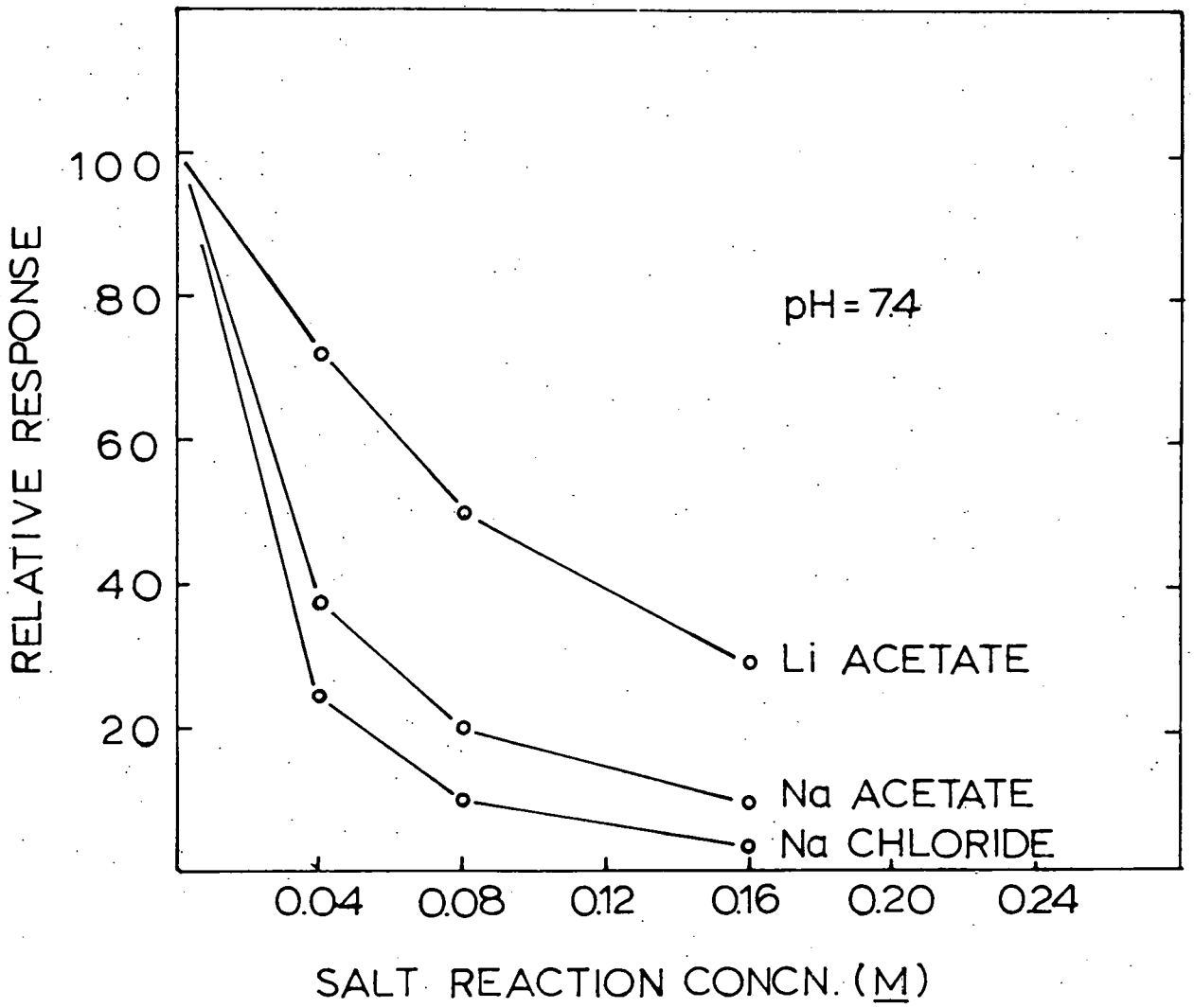

Figure 9

ORNL DWG 79-1519

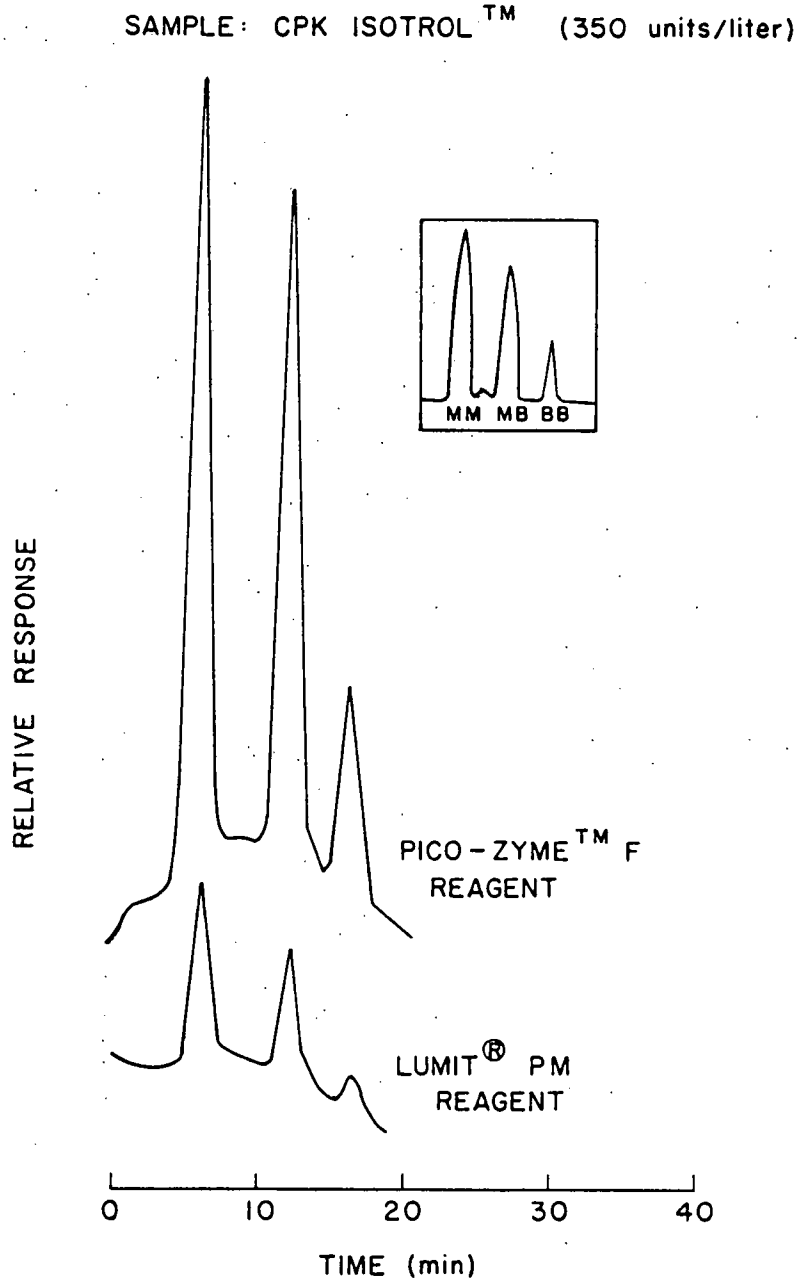

Figure 10

ORNL DWG 79-1518

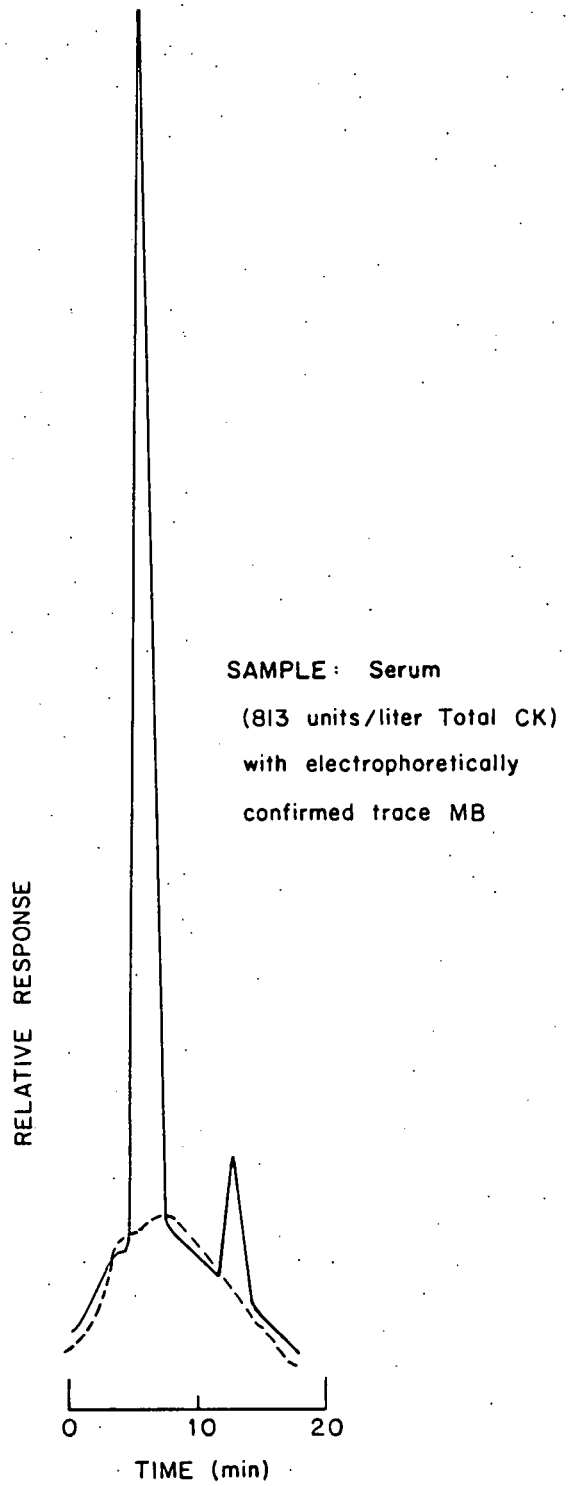

By chromatography, each CK isoenzyme is clearly and unambiguously identified. Adenylate kinase enzyme also occurs in serum and produces ATP as a reaction product, thus interfering with most procedures used to measure CK activity. However, by anion-exchange chromatography, adenylate kinase coelutes with the MM isoenzyme of CK and does not interfere with the detection of MB or BB isoenzymes (2, 13).

B. Electrochemical Oxidation of NADH--Determination of LD Isoenzymes

Monitoring of LD by the forward reaction as given in equation 4 (i.e. lactate to pyruvate) requires an alkaline medium for maximal activity. The previously reported (2) immobilized enzyme microreactor (equations 5 and 6 above) was not particularly stable at pH values of e.g. pH 8.5, especially when covalently linked to silica-based supports. In seeking a microreactor for LD determination which would be stable at elevated pH, we considered the possibility of direct electrochemical oxidation of the NADH reaction product (equation 4).

In conventional amperometry, one measures the current produced by the oxidation or reduction of a small portion (e.g. 1%) of electroactive components. The methodology is sensitive, but lacks selectivity. When applied to the determination of NADH produced by the catalytic action of serum enzymes, it has not been particularly successful, due to the large background current produced by the many biological components more easily oxidized than NADH (14,15).

Monitoring the change in absorbance (at 340 nm) after electrochemical oxidation would allow greater selectivity; however, for purposes of sensitivity, a large, consistant portion of NADH must be oxidized.

Recently, reticulated vitreous carbon (RVC) has been utilized as an electrode material for use in flowing streams (16-18). It has the advantages of high void volume (e.g. 94-97%) and thus low resistance to flow, large surface area, physical continuity, self-supporting structure, and low electrical resistance. Depending upon residence time in the electrode, analyte can be totally electrolyzed (16).

The construction of our flow-through electrode cell is shown in Fig. 4B. Figure 11 illustrates the effect of the potential applied to the electrode upon the electrooxidation of NADH. Under the prevailing conditions, the percent oxidation plateaus at ∿0.95 V (vs Ag/AgCl reference). The percent conversion of NADH is dependent upon the flow rate through the electrode (and thus residence time), as shown in Figure 12A. The flow rate dependence is similar to that reported by Blaedel and Wang (16) for laminar flow through the electrode (i.e., cube-root flow dependence, see Fig. 12B).

In order to test how well the stream-splitter and matched-flow RVC columns performed, both channels were monitored simultaneously at 340 nm vs static reference (buffer solution). A slug (300 μl) of NADH solution was injected into the effluent stream, bypassing the separation column but passing through the reaction delay coil. Initially, no potential was applied to the active electrode. The results are given in Table 2. The measured peak areas agreed within 1.3% and the flow characteristics were similar, as judged by the agreement of retention times and band halfwidths. Next, a potential of +0.95 V (vs Ag/AgCl reference) was applied to the "active" electrode cell and varying amounts of NADH were injected into the flow stream.

Figure 11

ORNL DWG 79-1425

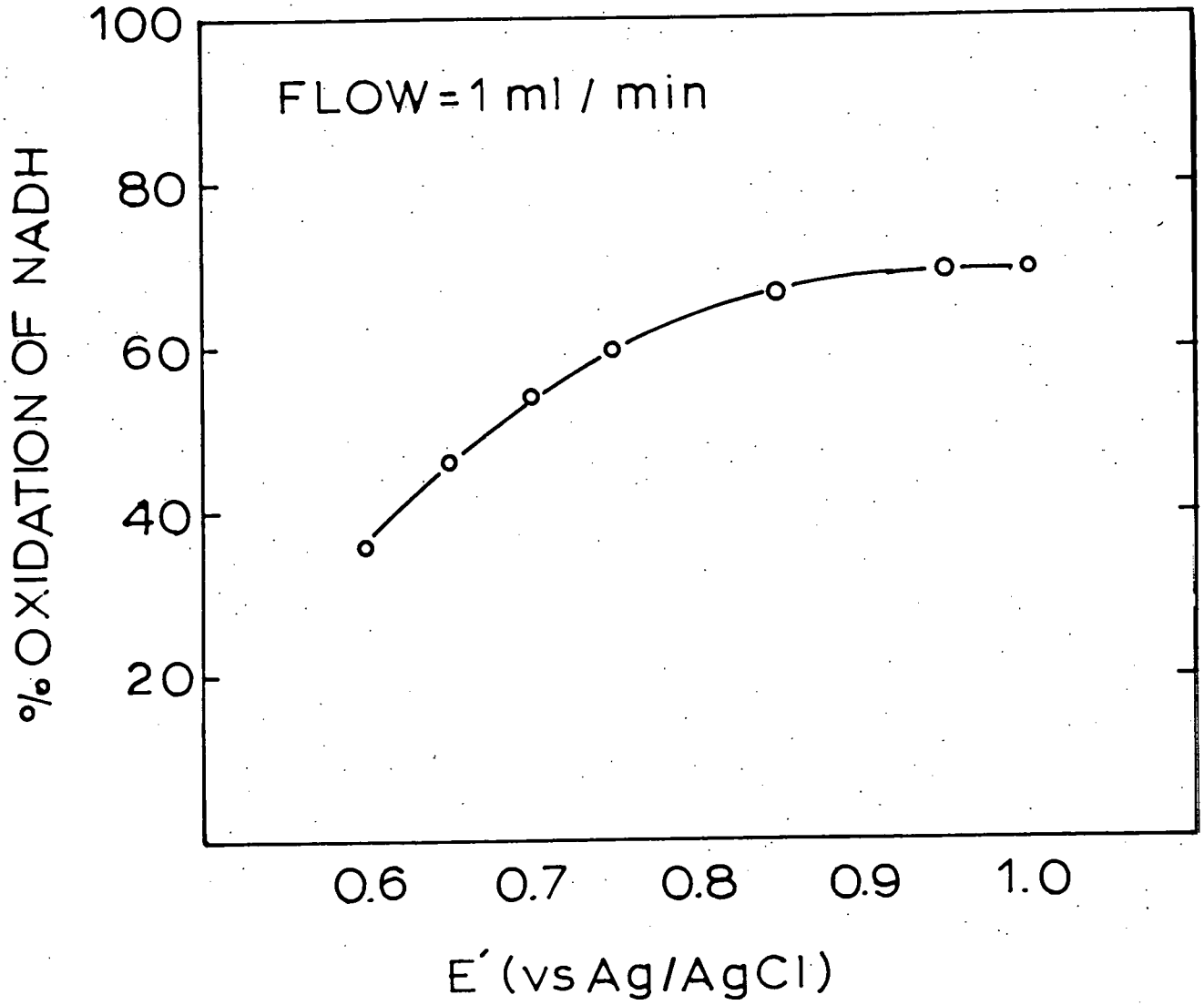

Figure 12A
& 12B

NO. 340-MP DIETZGEN GRAPH PAPER
MILLIMETER

EUGENE DIETZGEN CO.
MADE IN U. S. A.

3370-0025

Denton
4-6837

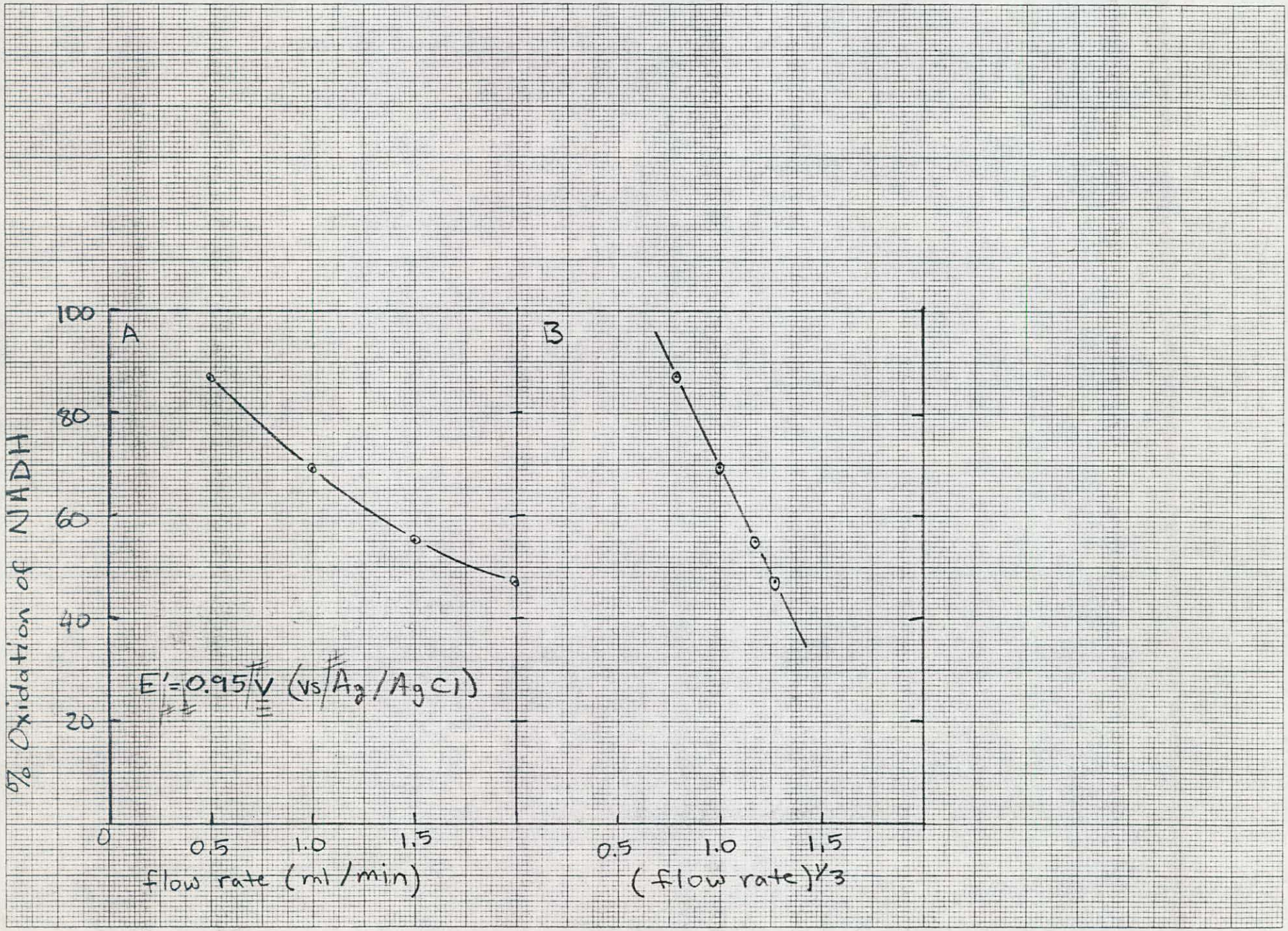

Table 2. Matched flows in RVC electrode cells[a,b]

	Sample cell	Reference cell
t_r (min)	6.3	6.2
$W_{1/2}$ (min)	1.9	2.1
peak height	22.5	20.1
peak area	42.75	42.21

[a]See Figure 2 for configuration of electrode cells and photometer cells.

[b]Sample was 300 μl of 32 μmolar NADH; flow rate was 1 ml/min of 0.05 mol/liter TRIS buffer (pH 8.5) with 0.1 mol/liter NaCl.

As shown in Figure 13, a reproducible portion of NADH (67.5 ± 1% at a flow rate of 1 ml/min) is oxidized to NAD, thus producing a difference in optical signal between the sample and reference flow cells of a spectrophotometer monitoring at 340 nm.

Figure 14 illustrates the response of the LD system to 50 μl of serum (∿350 U/liter total LD activity) from a patient with myocardial infarction (note: this is the same serum whose CK activity is profiled in Figure 10). See figure caption for chromatographic conditions. As expected after heart damage, LD1 is the preponderant isoenzyme (2).

A referenced fluorometer (such as the one depicted in schematic form in Figure 15) replacing or in series with the uv-absorbance monitor, could afford the ultimate in sensitivity and selectivity when used in conjunction with the electrochemical cells. Such a fluorometer is presently being fabricated in house for this purpose. Besides the advantage of enhancing selectivity by controlling electrochemical potentials and excitation and emission wavelengths, fluorescing artefacts prevailent in serum samples (1,2, and 19) are effectively blanked.

ACKNOWLEDGMENT

We gratefully acknowledge the advice and assistance of Leon N. Klatt, ORNL Analytical Chemistry Division, and Martin L. Bauer, ORNL Instrumentation and Control Division, in the design of the RVC electrochemical cell and its associated circuitry. This research was sponsored by the Division of Biomedical and Environmental Sciences, U.S. Department of Energy under contract W-7405-eng-26 with the Union Carbide Corporation.

Figure 13

ORNL DWG 79-1424

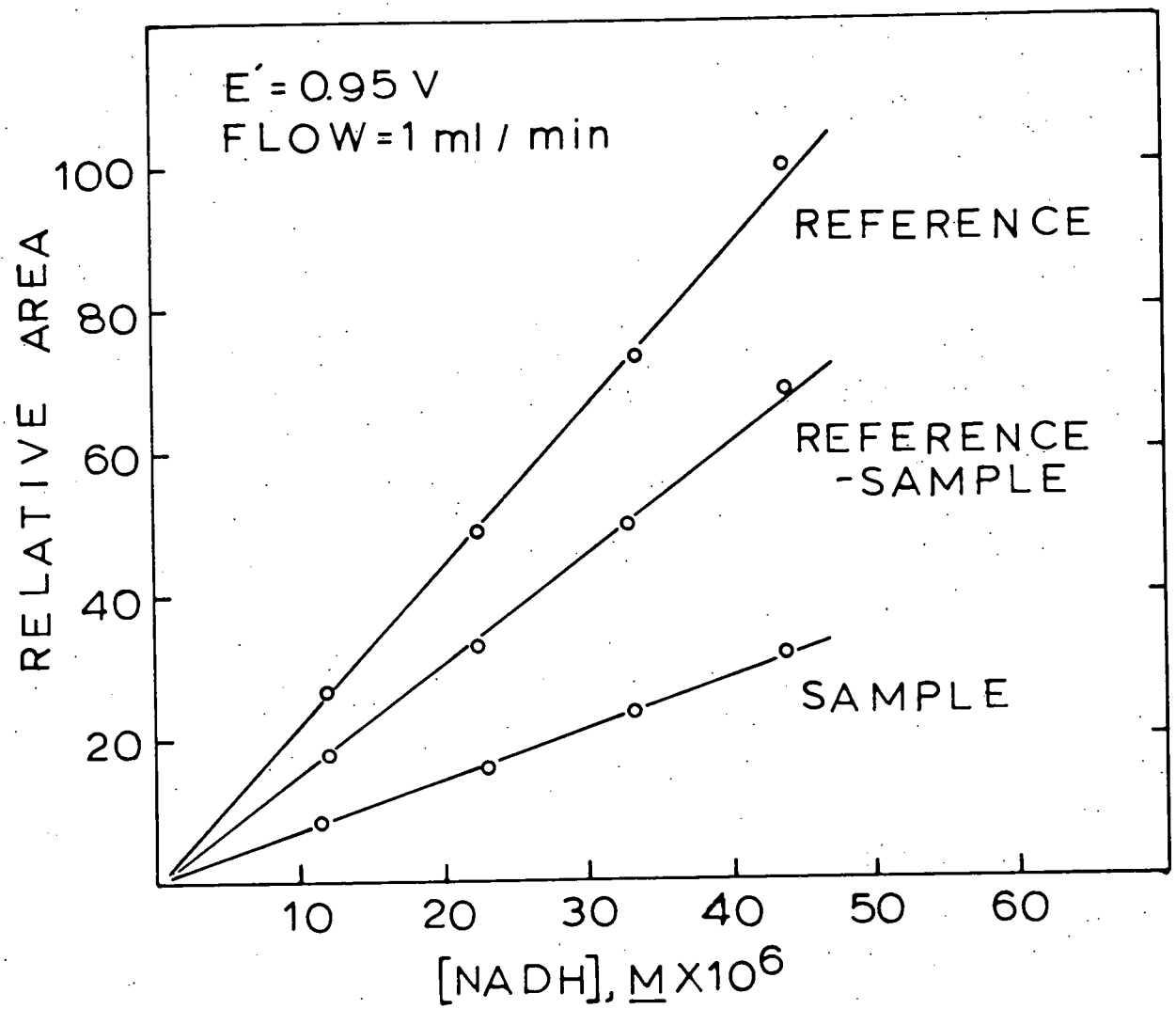

Figure 14

ORNL DWG 79-1590

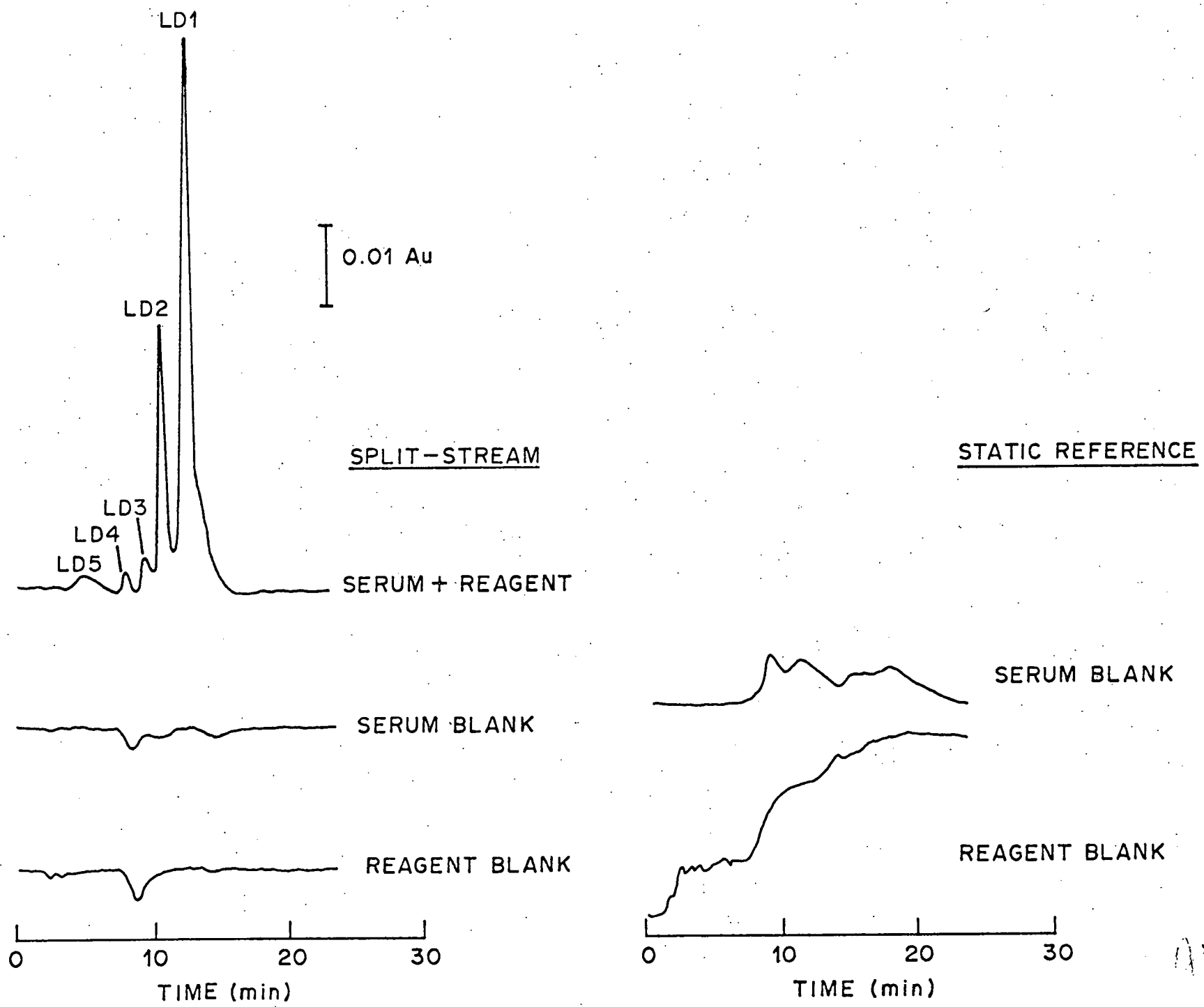

Figure 15

ORNL DWG 79-1338

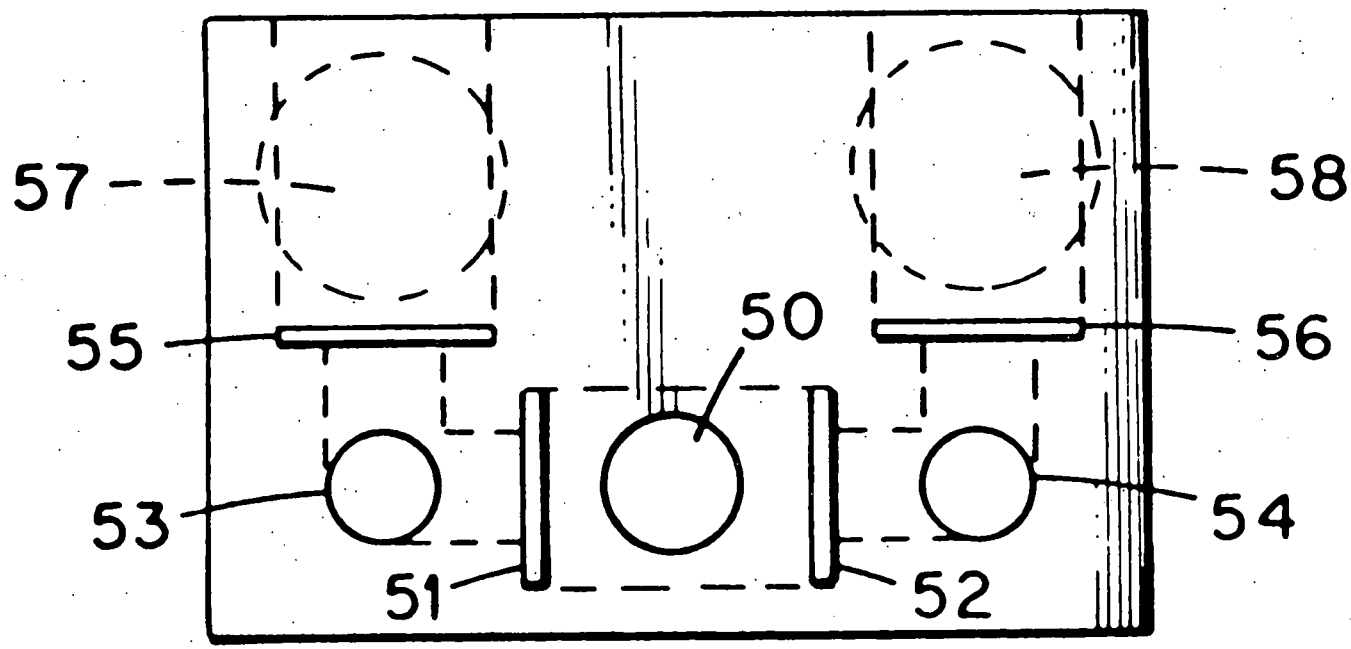

FIGURE CAPTIONS

Fig. 1. Schematic for the chromatographic separation and bioluminescence monitoring of CK isoenzymes.

Fig. 2. Schematic for the chromatographic separation and continuously referenced monitoring of LD isoenzymes with a reticulated vitreous carbon (RVC) electrochemical cell.

Fig. 3. Schematic for the simultaneous chromatographic separation and independent continuously referenced monitoring of CK and LD isoenzymes (cf. Figure 2).

Fig. 4A. Schematic for the construction of a microvolume (~20 μl) T-mixer. (4B) Schematic for the construction of an "active" electrochemical cell with a flow-through RVC working electrode.

Fig. 5. Schematic for an inexpensive potentiostat to control potentials between the RVC working electrode and the stainless steel auxiliary electrode. (Digital voltmeter is connected between the working and reference electrodes.)

Fig. 6. Proportionality between observed luminescence response and concentration of ATP, with use of a flow fluorometer (no external source or filters).

Fig. 7. Effect of dilution of luciferin-luciferase reagent upon bioluminescence response.

Fig. 8. Effect of selected inhibitory salts upon bioluminescence response. Reagent is LUMIT PM in 0.05 mole/liter imidazole acetate, pH 7.4.

Fig. 9. Chromatographic separation and bioluminescence monitoring of CK isoenzymes in a control sample. Total CK activity (photometric HK/GPDH-linked assay) ∿350 U/liter at 30°C. Insert: typical fluorometric densitometer scan of electrophoretically separated isoenzymes.

Chromatographic Conditions:

SAMPLE - 100 μl CPK Isotrol

COLUMN - 30 cm x 0.46 cm Synchropak AX-300

GRADIENT - 10-60% B in 15 min (#6 linear)

A = 0.03 mol/liter TRIS, pH 7.4

B = 1.0 mol/liter LiOAc, pH 7.4

COLUMN FLOW RATE - 3 ml/min

DETECTOR FLOW RATE - 0.32 ml/min

REAGENT FLOW RATE - 0.16 ml/min

DELAY COIL - 2.4 min at 24°C

DETECTOR - Aminco Fluoro-Monitor

Fig. 10. Chromatographic separation and bioluminescence monitoring of 50 μl of an authentic serum sample with an electrophoretically confirmed trace MB isoenzyme. Total CK activity (photometric HK/GPDH-linked assay) ∿813 U/liter at 30°C. Dashed line: typical reagent blank. Chromatographic Conditions: Same as in Figure 9, except using Pico-Zyme F reagent.

Fig. 11. Percent oxidation of NADH in RVC flow-through electrode as a function of applied potential, E', vs Ag/AgCl couple.

Fig. 12A. Flow rate dependence of percent oxidation of NADH in RVC flow-through electrode. (12B) Cube-root flow dependence, indicative of laminar flow in electrode.

Fig. 13. Proportionality between peak area and amount of NADH applied for reference stream (passage through passive "dummy" electrode), sample stream (passage through "active" electrode poised at $E' = +0.95$ V, cf. Figure 11), and the computed difference between reference and sample streams (corresponding to 67.5 $\pm$ 1.5% oxidation of NADH in sample stream).

Fig. 14. Chromatographic separation and electrooxidation/uv-absorbance (340 nm) detection of LD isoenzymes in an authentic serum sample (see Figure 10). Total LD activity ∿406 U/liter. Serum blanks (distilled water in place of reagents) and reagent blanks (no sample) are compared for split-stream vs static reference systems. The serum sample and serum blank have been corrected for the reagent blank which is quite reproducible.

Chromatographic Conditions:

SAMPLE - 50 μl serum

COLUMN - 30 cm x 0.46 cm (ID), Synchropak AX300

GRADIENT - 0-80% B (Convex #4 Gradient) in 20 min

A = 0.02 mol/liter TRIS, pH 7.9

B = 0.02 mol/liter TRIS, 0.5 mol/liter NaCl

COLUMN FLOW RATE - 1 ml/min

REAGENT FLOW RATE - 0.14 ml/min

DELAY COIL - 4 min at 37°C

DETECTOR - Waters 440 (0.1 AUFS)

Fig. 15. Referenced Flow Fluorometer utilizing a single source (50), excitation filters (51 and 52), quartz flow cells (53 and 54), emission filters (55 and 56), and dual photomultiplier tubes (57 and 58).

REFERENCES

1. M. S. Denton, W. D. Bostick, S. R. Dinsmore, and J. E. Mrochek, Chromatographic separation and continuously referenced, on-line monitoring of creatine kinase isoenzymes by use of an immobilized-enzyme microreactor, Clin. Chem., 24: 1408 (1978).
2. M. S. Denton, W. D. Bostick, S. R. Dinsmore, and J. E. Mrochek, Continuously-referenced, on-line monitoring of creatine kinase and lactate dehydrogenase isoenzymes for use in clinical diagnostics, in G. Hawk, ed., Biological/Biomedical Applications of Liquid Chromatography, II. Marcel Dekker, Inc., October 1979.
3. W. D. Bostick and B. S. Ausmus, Methodologies for the determination of adenosine phosphates, Anal. Biochem., 88, 78 (1978).
4. A. L. Norris, Fluorocarbon Co., personal communication (Sept. 1979).
5. F. Gorus and E. Schram, Applications of Bio- and Chemiluminescence in the clinical laboratory, Clin. Chem. 25, 512 (1979).
6. A. Lundin, A. Rickardsson, and A. Thore, Continuous monitoring of ATP-converting reactions by purified firefly luciferase, Anal. Biochem. 75, 611 (1976).
7. M. DeLuca and W. D. McElroy, Kinetics of the firefly luciferase catalyzed reactions, Biochem., 13, 921 (1974).
8. G. Szasz, W. Gruber, and E. Bernt, Creatine kinase in serum. 1. Determination of optimum reaction conditions, Clin. Chem., 22, 650 (1976).
9. R. S. Tobin, J. F. Ryan, and B. K. Afgan, An improved method for the detection of ATP in environmental samples, Water Research, 12, 783 (1978).

10. L. M. Aledort, R. I. Weed, and S. B. Troup, Ionic effects on firefly bioluminescence assay of red blood cell ATP, Anal. Biochem., 17, 268 (1966).

11. J. L. Denburg and W. D. McElroy, Anion inhibition of firefly luciferase, Arch. Biochem. Biophys., 141, 668 (1970).

12. T. D. Schlabach, A. J. Alpert, and F. E. Regnier, Rapid assessment of Isoenzymes by high-performance liquid chromatography, Clin. Chem., 24, 1351 (1978).

13. B. Klein and C. L. Jeunelot, Ion-exchange chromatography of erythrocytic and muscle adenylate kinase and its effect on serum creatine kinase isoenzyme assays (abstract), Clin. Chem., 24, 988 (1978).

14. T. C. Wallace, M. B. Leh, and R. W. Coughlin, Amperometric assay of coenzyme-dependent oxidoreductase enzymes in a flow-through cell, Biotech. Bioengr. XIX, 901 (1977).

15. G. C. Davis, K. L. Holl and P. T. Kissinger, Amperometic methods for oxidoreductase enzymes based on LC with electrochemical detection. Alcohol dehydrogenase, J. Liq. Chrom., 2, 663 (1979).

16. W. J. Blaedel and J. Wang, Flow electrolysis on a reticulated vitreous carbon electrode, Anal. Chem., 51, 799 (1979).

17. A. N. Strohl and D. J. Curran, Flow injection analysis with reticulated vitreous carbon electrodes, Anal. Chem., 51, 1045 (1979).

18. A. N. Strohl and D. J. Curran, Reticulated vitreous carbon flow-through electrodes, Anal. Chem., 51, 353 (1979).

19. N. Jaggarao and D. W. Moss, A fluorescent artefact resembling BB-creatine kinase in sera of patients with prostatic disease, Clinica. Chemica. Acta, 92, 477 (1979).