ENVIRONMENTAL ASSESSMENT

THERMAL LOOP EXPERIMENTAL FACILITY
SALTON SEA GEOTHERMAL FIELD
NILAND, CALIFORNIA

ERDA--8007234

DE88 007234

MASTER

JANUARY 1976

DISCLAIMER

This report was prepared as an account of work sponsored by an agency of the United States Government. Neither the United States Government nor any agency thereof, nor any of their employees, makes any warranty, express or implied, or assumes any legal liability or responsibility for the accuracy, completeness, or usefulness of any information, apparatus, product, or process disclosed, or represents that its use would not infringe privately owned rights. Reference herein to any specific commercial product, process, or service by trade name, trademark, manufacturer, or otherwise does not necessarily constitute or imply its endorsement, recommendation, or favoring by the United States Government or any agency thereof. The views and opinions of authors expressed herein do not necessarily state or reflect those of the United States Government or any agency thereof.

DIVISION OF GEOTHERMAL ENERGY
U.S. ENERGY RESEARCH AND DEVELOPMENT ADMINISTRATION
WASHINGTON, D.C. 20545

DISTRIBUTION OF THIS DOCUMENT IS UNLIMITED

DISCLAIMER

This report was prepared as an account of work sponsored by an agency of the United States Government. Neither the United States Government nor any agency Thereof, nor any of their employees, makes any warranty, express or implied, or assumes any legal liability or responsibility for the accuracy, completeness, or usefulness of any information, apparatus, product, or process disclosed, or represents that its use would not infringe privately owned rights. Reference herein to any specific commercial product, process, or service by trade name, trademark, manufacturer, or otherwise does not necessarily constitute or imply its endorsement, recommendation, or favoring by the United States Government or any agency thereof. The views and opinions of authors expressed herein do not necessarily state or reflect those of the United States Government or any agency thereof.

DISCLAIMER

Portions of this document may be illegible in electronic image products. Images are produced from the best available original document.

LEGIBILITY NOTICE

A major purpose of the Technical Information Center is to provide the broadest possible dissemination of information contained in DOE's Research and Development Reports to business, industry, the academic community, and federal, state, and local governments. Non-DOE originated information is also disseminated by the Technical Information Center to support ongoing DOE programs.

Although large portions of this report are not reproducible, it is being made available only in paper copy form to facilitate the availability of those parts of the document which are legible. Copies may be obtained from the National Technical Information Service. Authorized recipients may obtain a copy directly from the Department of Energy's Technical Information Center.

3

TABLE OF CONTENTS

I. Proposed ERDA Action, Environment Affected, and Anticipated Benefits

II. Environmental Assessment

A. Impact Evaluation

B. Assessment of Short-Term vs. Long-Term Benefits

C. Irreversible and Irretrievable Commitments

D. Alternatives

III. Potential Conflicts with State, Regional or Local Plans

IV. Summary and Conclusion

THERMAL LOOP EXPERIMENTAL FACILITY

I. PROPOSED ERDA ACTION, ENVIRONMENT AFFECTED, AND ANTICIPATED BENEFITS

The U.S. Energy Research and Development Administration (ERDA) has negotiated a contract with San Diego Gas and Electric Company, San Diego, California, (SDG&E) to support and expedite technology development at a thermal loop experimental facility already under construction by SDG&E in the Salton Sea Geothermal Field, near Niland, Imperial Valley, California (Figures 1 and 2). The facility is designed to simulate a 10 MWe geothermal electrical power plant, using 4-stage steam flash and binary cycle conversion equipment to extract heat from the high-temperature, high-salinity geothermal brines of the Salton Sea Field. An expansion valve will be used to simulate a power turbine to evaluate system operation. To date, economic development of this geothermal resource has been inhibited by severe technical problems, primarily scaling buildup in equipment exposed to the highly concentrated brines. As a result of tests conducted during the past several years, SDG&E has designed a heat transfer system which, if successful, will permit utilization of this resource.

Under the contract, ERDA has undertaken to participate with SDG&E in the conduct of the thermal loop experiment, sharing one half of the approximate $8,000,000 cost of the experiment and providing additional research support through ERDA laboratories.

The thermal loop facility is located in sec. 33-11S-13E, SBB&M Imperial County, California. The land is privately-owned agricultural land, under geothermal lease, located near the south end of the Salton Sea, along the axis of the Salton Trough and Imperial Valley. It is flat, with a very gentle downward gradient northward towards the Salton Sea. Ground level elevation at the wellhead is approximately 225 feet below sea level while the elevation of the Salton Sea is - 232 feet. There is very little natural vegetation on the land, which has been graded (and tiled) to allow intensive agricultural use. The Vail No. 4 irrigation canal of the Imperial Valley irrigation system runs along the east edge of the facility site. A drainage ditch feeding into the Vail 4-A drain, situated across Gentry Road from the site, runs along the north edge of section 33. One mile north of the site is the boundary of a portion of the Salton Sea National Wildlife Refuge. The nearest residence is also one mile north at the junction of Sinclair and Gentry Roads. The facility will utilize 4 existing geothermal wells: the Woolsey # 1, adjacent to the SE/c sec. 33,

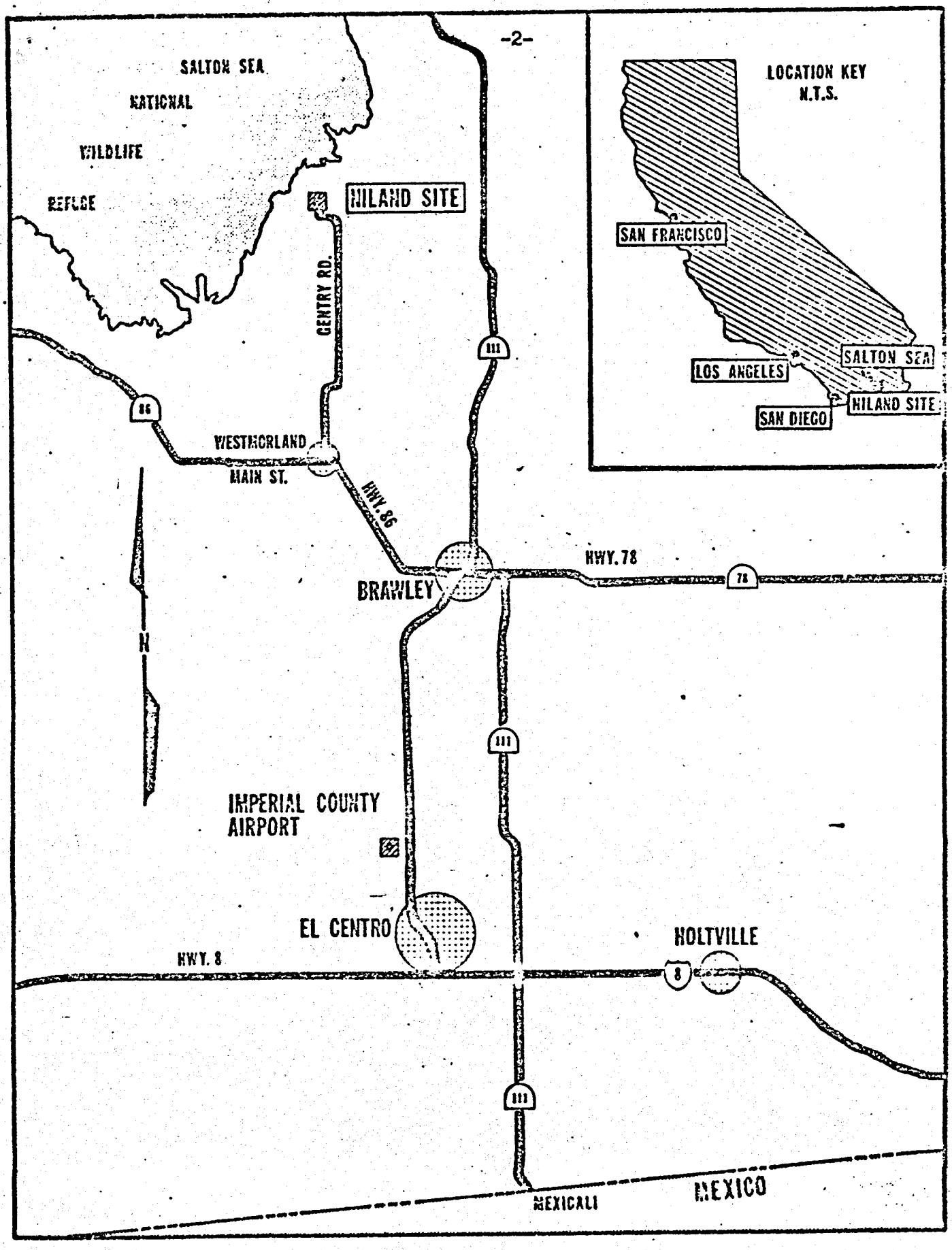

Figure 1

LOCATION PLAN
SDG&E CO

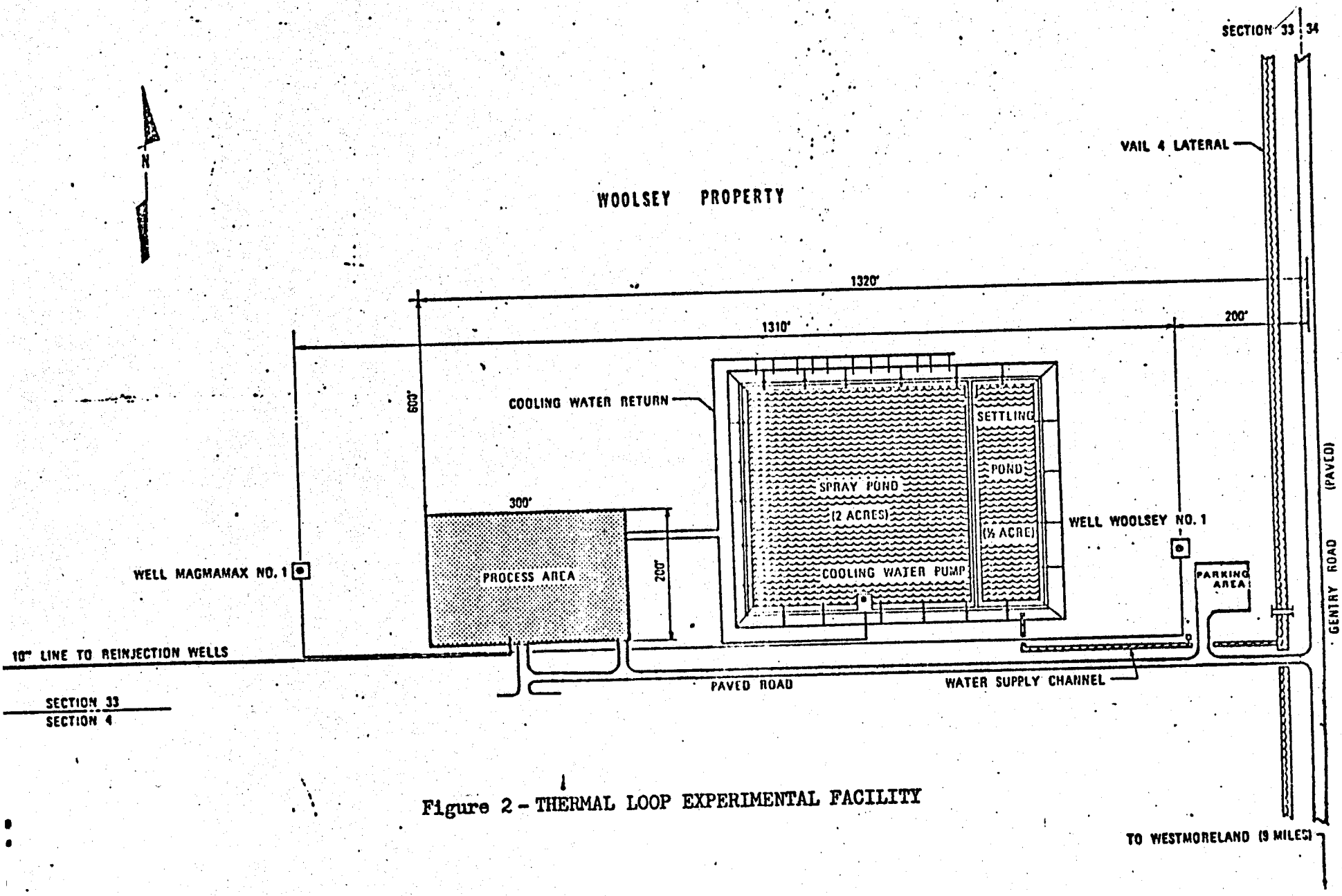

Figure 2 - THERMAL LOOP EXPERIMENTAL FACILITY

to the SE/c sec. 33, and the Magmamax #1, adjacent to the are to be used to supply brine to the facility; the Magmamax #2, adjacent to the NW/c SW 1/4 sec. 33, and the Magmamax #4, near the center of sec. 33, are to be used for reinjection wells. The facility occupies approximately 18.2 acres along the south edge of the SE 1/4 sec. 33; supply and injection lines to the wells are routed along road edges to allow concurrent use of the fields for agriculture. Each well is in the center of a 20-foot square operating area; since these areas are all adjacent to existing roads, very short roads allow access of equipment to the wellheads.

A general description of the geology, topography, climate, vegetation, and wildlife (including endangered species) of the Salton Sea Known Geothermal Resource Area (KGRA) is presented in the "Final Environmental Statement for the Geothermal Leasing Program", U. S. Department of Interior, 1973, vol. II, pp. V-303 to V-445.

The Salton Sea Geothermal Field contains large amounts of very hot water (300°-575°F), carrying very high concentrations of dissolved solids (10-30 wt. %). The reservoir characteristics are attractive enough to encourage development to produce electrical power from the resource. The technical difficulties include handling of the brine, control of scaling and precipitation from the brine on equipment and piping exposed to the brine, and corrosion. As a result of tests done over the past several years at this site, SDG&E has designed a heat transfer system which, if successful, will permit utilization of this resource. The thermal loop facility is being constructed to permit testing of equipment to demonstrate the success of the design work.

Figure 3 (Geothermal Thermal-Loop Process Flow Diagram) shows the operating cycle of the test loop. The Woolsey #1 and Magmamax #1 geothermal wells will be used as supply wells (Figure 2). The flow of steam and hot water from the wells will be passed through a 4-stage flash system and through scrubbers to produce clean steam (10-20 ppm TDS); the residual brine will be routed to the injection system. Noncondensable gases will be vented from the first stage flash section. It is anticipated that a flow of 800,000 lbs/hr will be used when the plant is operating at full flow conditions. Design flow conditions are contained in Table I.

Table I

DESIGN FLOW CONDITIONS

MULTI-STAGE FLASH

GEOTHERMAL FLUID:

Production Well Flow - 2 wells	(lbs/hr)	800,000
Water (lbs/hr)	544,000	
Solids (lbs/hr)	136,000	
Non-Condensible gas (lbs/hr)	24,000	
Steam (lbs/hr)	96,000	
First Stage Temp - inlet (F)		370
First Stage Press - inlet (psig)		150
Last Stage Temp - inlet (F)		140

ISOBUTANE:

Flow (lbs/hr)	1,000,000
Temperature - turbine inlet (F)	325
Pressure - turbine inlet (psig)	485
Temperature - condenser outlet (F)	120
Pressure - condenser outlet (psig)	80
Gross Energy Output - equivalent electrical (KW)	10,000

COOLING WATER:

Temperature - inlet (F)	90

The clean steam will be the heat source for a binary cycle power system using isobutane as the power fluid. Heat will be transferred from the steam to the isobutane in heat exchangers. The isobutane system will include an expansion valve which will be used to simulate a turbine. Cooling water for the isobutane system will be obtained from the Vail Lateral #4 irrigation canal, which runs along the east boundary of the site. The irrigation water will pass through a settling pond and into a storage pond. Figure 3, Geothermal Plant Plot Plan, shows details of the system. The water will be pumped from the storage pond to the isobutane condenser units, where the isobutane condenses. The heated water is returned to the pond area, where it is sprayed into the air to allow cooling by evaporation. At full flow using an expansion valve to simulate a power turbine, 3 acre-feet of water per day will be used with one acre foot lost through blow down and 2 acre feet through evaporation. There will be no cooling water return to the irrigation canal.

Water condensed from the steam flash side of the heat exchangers is routed to the injection system, where it is mingled with the residual brine. The water passes through an enclosed sump and then is piped to the injection wells, Magmamax #2 and #4. Figures 2 and 3 include schematic drawings showing details of this routing.

Electricity required to operate the thermal loop facility is being obtained from an Imperial Irrigation District power line which runs along the south edge of the site.

The SDG&E test program, which is expected to last approximately 18 to 30 months, can be divided into two parts: 1) studies of the brine supply system, and 2) tests of the plant equipment and operating techniques. Studies of the brine supply system include reservoir analysis, operation of the production wells, and operation of the injection system. The test program for power plant equipment is intended to evaluate separator and scrubber design, heat exchanger operation, isobutane loop operation, geothermal fluid process controls, process piping, pumps, and system cleaning techniques. Other tests appropriate to development of the power system will be made as necessary.

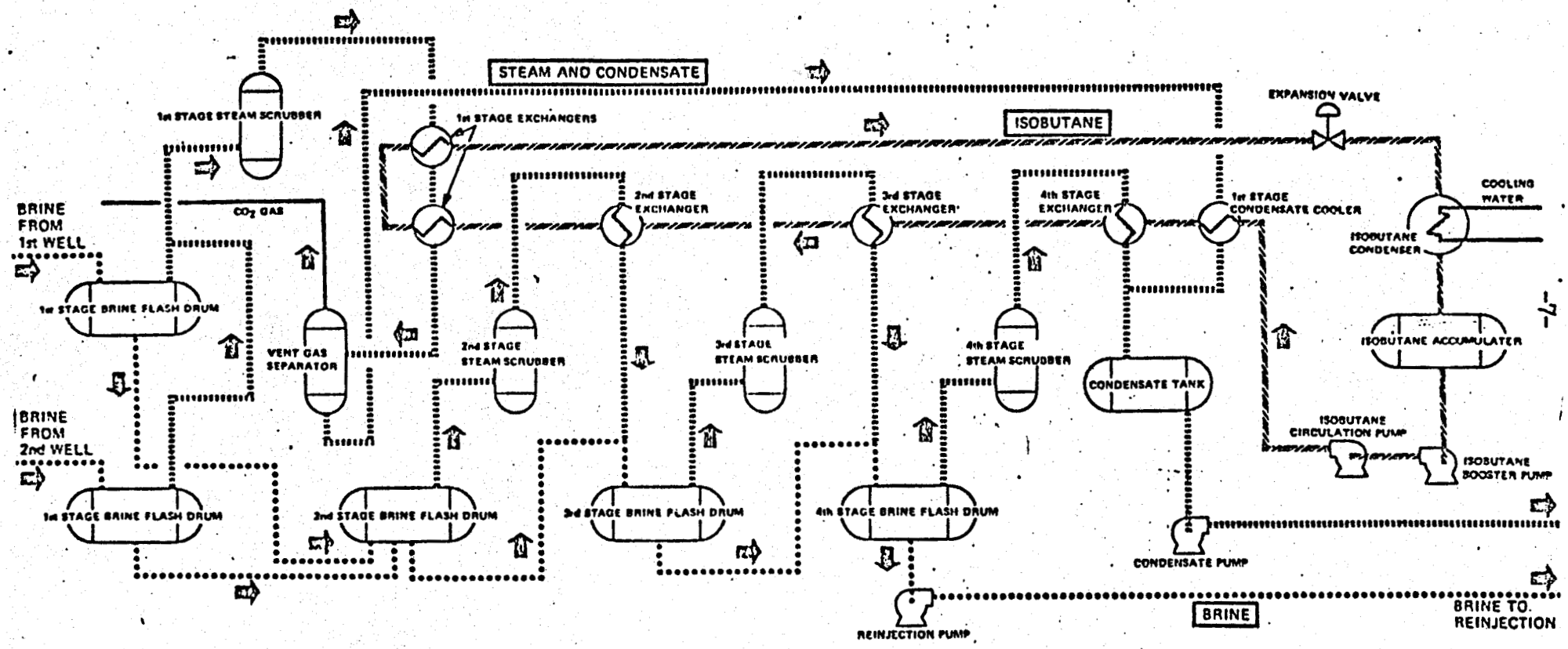

Figure 3 - THERMAL LOOP PROCESS FLOW DIAGRAM

In addition to these technologically oriented operations, the ERDA Division of Biological and Environmental Research (BER) is funding a program to undertake environmental baseline and monitoring studies in Imperial Valley, as a part of ERDA's commitment to support development of potential geothermal resources. Technical management of the BER program is by Lawrence Livermore Laboratory. Early efforts in this program will be carried out in the immediate vicinity of the SDG&E facility, in order to document any environmental effects which may result from operations at the facility. The program includes comprehensive studies of air quality, water quality, ecology, subsidence and possible induced seismicity, potential health effects resulting from geothermal production, and an integrated assessment of the results of the study.

Ultimately, if tests of the 10 MWe facility are successful, SDG&E intends to construct a 50 MWe demonstration power plant. Environmental data pertinent to conducting an environmental assessment of this larger-scale development in the area will be obtained during the program outlined above as an integral part of ERDA program.

Anticipated benefits are the development and demonstration of proven power conversion equipment which would allow utilization of the very large amount of geothermal energy present in the Salton Sea Geothermal Field. Development of this relatively pollution-free energy source would contribute significantly to the electrical power supply of the Southwest, freeing scarce fossil fuels for other uses.

II. ENVIRONMENTAL ASSESSMENT

Agencies of the State of California and Imperial County have laready given serious and detailed consideration to environmental impacts of geothermal development in this region. Mitigating measures for control of environmental impacts are mandated by Imperial County's Terms, Conditions, and Standards, by the State of California, Division of Oil and Gas in regulations for completion of geothermal wells, and by the California Regional Water Quality Control Board, which regulates discharge of geothermal brines.

Studies of environmental impacts which may occur during development of geothermal resources are a major part of the ERDA program. These studies include analysis of environmental effects and development of control techniques to be employed as mitigating measures where necessary.

A. IMPACT EVALUATION

Discussed below is an environmental impact evaluation for the proposed thermal loop facility.

1. The site occupies 18.2 acres, plus rights-of-way along existing roads to the three outlying wells (Magmamax #1, #2, and #3) and the actual well sites, which are approximately 20 feet square. Since the wells adjoin exisiting roads, the well sites occupy a minimum amount of agricultural land. Any toxic materials accumulating at the testfacility and not reinjected to the subsurface formations will be removed and disposed of in accordance with applicable regulations. If operations are successful, the site will be utilized for geothermal production for a number of years. When the site is no longer needed for geothermal development uses, all installations disturbing the land surface will be removed, and the land will be restored to agricultural use.

2. Based upon similar operations in the past at this site and at the nearby Sinclair #4 well, which had no apparent significant adverse effects on wildlife, regular operations of the thermal loop facility is not expected to cause significant disturbance of the wildlife in the area, including migratory waterfowl. As a part of the BER baseline study, the interaction of this geothermal facility with local wildlife will be investigated. If the investigation shows that significant disturbance is occurring, appropriate mitigating measures will be taken.

3. The geothermal wells of this facility are known to produce noncondensable gases. It is estimated that the steam generation process will release about 24,000 lbs. per hour of noncondensable gases, 96% of which will be carbon dioxide, 1% nitrogen, 1% methane, 1% oxygen, and 1% miscellaneous. The miscellaneous fraction includes such undesirable materials as hydrogen sulfide, ammonia, and traces of heavy metal vapors. Based upon previous production at one of these wells, hydrogen sulfide concentrations on the order of 1200 ppm may be encountered. Under these conditions, atmospheric concentrations sufficient to exceed applicable California air quality standards could occur within approximately 1000 meters of the discharge point. Verification of hydrogen sulfide concentrations in the brine and new atmospheric concentration calculations will be made during initial flow of the wells prior to operation of the thermal loop facility. If these calculations indicate that air quality standards will be exceeded, appropriate control measures will be applied. In addition, in order to evaluate the effectiveness of such control measures, both the SDG&E and ERDA/BER programs will include monitoring to determine the actual amounts of noncondensable gases which will accompany facility operation and the atmospheric concentration which occur near the site.

4. Geothermal wells create unusual stresses on casing and wellhead equipment that may cuase failure of these parts, resulting in uncontrolled flow from the well. Based on intensive studies, the California Division of Oil and Gas has mandated stringent standards of construction to reduce the risk of such blowouts to an absolute minimum. The standards include design and cementing of casing strings,

use of blowout prevention equipment of specified size, and extensive extra bracing of the wellhead equipment. The results of this program have been very satisfactory: there have been no blowouts or runaway wells in the Imperial Valley since the standards have been effect. The wells and equipment involved in this program meet or exceed the Division of Oil and Gas standards.

Despite all precautions, it is possible that in the course of operations at the pilot facility some leakages of geothermal fluid could occur. Constant monitoring during operations will minimize the probability of such accidents, as well as their size, and the site is designed to retain quite large amounts of brine so that contamination of land or water outside the immediate site area is unlikely. Pressures in the wells are not high, and the water is heavy due to the high brine concentration; in fact, it is usually necessary to induce the beginning of flow from a shut-in well by artificial means. This indicates that existing technology should be sufficient to stop the flow of brine from a runaway well. As part of the ERDA program, studies are being made of the likely effect of such an accident and the mitigating measures to control it; part of the BER environmental monitoring program is a system to monitor surface water for evidence of contamination as a result of such accidents or other inadvertent releases of geothermal fluids.

5. Disposal of geothermal brines produced during operations of the facility is a matter of special concern to state and local authorities. The steadily increasing mineral content of the Salton Sea with its potential for increasing water salinity has caused much anxiety about the future of the sport fishery in the Salton Sea, since the fish cannot reproduce when the salinity of the water exceeds a critical level. Consequently, the California Regional Water Quality Control Board, Colorado River Basin, has not allowed discharge of the geothermal brines to the surface drainage, including the Sea, for the past several years, since it is felt that the additional salt from the brines might upset the ecological balance of the Sea. The Board requires either reinjection of spent brine or the construction of a brine holding and evaporation pond. The thermal loop facility will depend upon reinjection to deep, permeable subsurface strata for brine disposal. In some parts of the United States, high pressure injection of fluid has induced seismicity. It should be emphasized that this has not occurred in the Salton Trough and high pressure reinjection is not contemplated during this project. Therefore, the risk

of induced seismicity at this site is very small. The holding pond for the geothermal brines prior to re-injection is lined so that it is impermeable. Additionally, the County of Imperial sets standards in its Terms and Conditions which control pond design; compliance is essential to the issuance of a geothermal production permit. These requirements have been satisfied at the facility. In view of the above, brine disposal is not expected to result in detectable environmental impact. ERDA studies of possible induced seismicity are discussed in the following section.

6. Since withdrawals of large amounts of water from subsurface strata underlying a valley can cause subsidence in that valley, the effects of withdrawals of geothermal fluid must be considered. Significant differential subsidence of parts of the flat-lying valley floor could have serious consequences for the extensive irrigation and drainage systems which support Imperial Valley agriculture.

Subsidence of the ground surface above a subsurface fluid reservoir is most often related to effects caused by withdrawal of fluid, primarily lowering of reservoir pressure and loss of the bulk volume of the fluid in saturated rocks. When the rocks are unconsolidated, with low physical strength, compaction results, resulting in the decreasing thickness of rock units. It has been found that much subsidence can be reversed by replacement of the fluid, either by natural recharge or by injection. At the proposed test site, all fluids produced during testing will be reinjected. In addition, it should be noted that large withdrawals even without reinjection may result in only very slight subsidence when reservoirs are large in area, as the Salton Sea geothermal reservoir has been indicated to be (Helgeson, 1968). For example, Schumann and Polant (1969) report that at Eloy-Picacho, Arizona, in a basin of similar size, the withdrawal of approximately 5,000,000 acre-feet (1.6 trillion gallons)

of water between 1940-1948 resulted in subsidence of approximately 0.1 foot. Therefore, it is reasonable to anticipate that there will be no measurable subsidence as a result of operation of this facility. Furthermore, there are other geologic reasons to support this conclusion. At the Salton Sea site, geothermal heat has caused metamorphic changes in the rocks which have increased their structural strength significantly (Muffler) and White, 1969), resulting in less subsidence potential due to fluid withdraw because the rocks will compact less under a given stress.

A part of the ERDA program will be studies of possible subsidence and induced seismicity. Studies will include development of techniques for early evaluation of the potential for subsidence, programs for close monitoring of surface levels during operations at the test facility, and evaluation of reinjection of fluid as a subsidence control technique.

As part of the subsidence study, the wells at the test site have been tied into the existing first-and second-order level network established by an interagency group in the Imperial Valley for the monitoring of subsidence. Since the network is already in operation, it will provide invaluable baseline data before significant geothermal fluid withdrawal begins. The Imperial Valley is an area of appreciable seismic and tectonic activity where it is reasonable to expect considerable surface movement quite unrelated to geothermal activity.

Lofgren (1974) reports that measurements on the network between 1972-74 show vertical elevation changes of 6-8 cm. (2.5-3 in.) in the Niland area. During this period, only intermittent small-scale testing of geothermal wells took place there. Without the baseline measurement, similar changes in surface level during periods of geothermal activity could be incorrectly attributed to the geothermal operations.

In other parts of the United States, injection of fluids into subsurface strata at pressure significantly greater than hydrostatic has caused seismic activity. Pakiser et al (1969) report that comprehensive studies of two of these occurrences both led to the conclusion that the seismic activity was triggered by the reduction of frictional resistance to faulting resulting from increasing pore pressure within the rocks. Such pore pressure increases were a direct result of high-pressure injection. In the Salton Sea area, injection is accomplished without high pressures. Chasteen (1974) reports that once injection has been started, required injection rates can be maintained by gravity flow of the cooled geothermal water. Thus, pressure at the formation face is very close to hydrostatic. Since injection pressures significantly higher than hydrostatic are apparently necessary to initiate seismic activity, it is unlikely that the proposed injection at the test site will induce seismicity. However, because the Imperial Valley is a highly active seismic area, it is essential to establish baseline measurements of the existing seismic activity in order to assess properly any events occuring during geothermal activity. The test plan includes such a measurement program.

7. The wells at this facility could create a temporary artifical interconnection between subsurface aquifers if the wells were not completed properly. Adherence to standards of the California Division of Oil and Gas eliminates the occurrence of such an interconnection under normal conditions. Moreover, the potential for adverse environmental impact under accidental conditions is extremely small because the local ground water is too saline for beneficial use (Loeltz, et al 1975).

8. Noise is not expected to be a problem because of the relatively low wellhead pressures from this geothermal field and the contained nature of the test system. Noise levels will be monitored to ensure compliance with the requirements in the Imperial County Regulations.

B. ASSESSMENT OF SHORT-TERM VS. LONG-TERM BENEFITS

The principal short-term benefits resulting from the rapid testing and evaluation of new geothermal fluid handling equipment and techniques at the SDG&E facility are the timely development and demonstration of new techniques for efficient power production from concentrated geothermal brines. The long-term benefits include the potential for development of a significant amount of relatively clean low-cost power to supply the Southwest, and the possibility of developing effective power conversion equipment with wide application in water-dominated geothermal systems.

The land used for the thermal loop facility has been taken out of agricultural production for the duration of tests and potential power production. The facility has been designed so that a minimum amount of land is used, making the major part of the land under lease available for concurrent agricultrual production. The owner of the land has voluntarily entered into a geothermal lease and is being compensated financially for its use by the geothermal operators. When geothermal operations are terminated, the land can be returned to agricultural use. Thus, an alternative short-term benefit, agricultural use of the land needed for the facility. has been sacrificed, but the long-term alternative benefits remain unimpaired.

C. IRREVERSIBLE AND IRRETRIEVABLE COMMITMENTS

The facility requires the use of a relatively large amount of capital equipment. It will be possible to recover most of the equipment when operations are terminated, that which cannot be removed or salvaged at the end of operations are irretrievable commitments. Supplies and labor necessary

for operation will also be an irretrievable commitment. Any funds committed to the research support of the experiment by ERDA laboratories are also irretrievable. The geothermal resource is depleted by production to the extent that reinjection does not recharge the reservoir. This will not be a significant part of the resource in place.

Finally, the cooling water will be irretrievably committed to cooling rather than irrigation. This would be 500 to 1100 acre feet per year, assuming daily losses of 3 acre feet, which is a small part of the approximately 3 million acre feet per year brought to the Valley Irrigation District from the Colorado River Basin.

D. ALTERNATIVES

One alternative is for ERDA to not support the SDG&E development program and thermal loop facility. The SDG&E program has previously been funded from revenues of the company's utility operations in hopes of developing new sources of power for their users. The amount of money which may be spend by SDG&E from this source is necessarily limited, and the ERDA support is intended to expedite development of necessary technology for development of the geothermal resource for national needs. If ERDA funds are not committed, development would proceed, though at a slower pace. Any environmental effect which might result from the facility are therefore unaltered by the fact of ERDA participation, but the development of suitable technology to produce badly-needed electrical power in a relatively clean way could be retarded significantly if the ERDA funding were not available.

A second alternative, of ERDA sponsoring the work elsewhere, is not considered economically or environmentally sound. Other existing wells in the area would have near identical environmental impact potential and new wells in a different area obviously introduce additional potential impacts from construction. Also, boundaries of the geothermal field limit the geographical area open to this project if it is to meet its objectives. Therefore new well sites would have to be in the same area.

III. POTENTIAL CONFLICTS WITH STATE, REGIONAL OR LOCAL PLANS

The geothermal operations on this site are privately-owned land upon which a valid geothermal lease has been issued. All cognizant governmental agencies have issued permits for the operation. There is no known conflict with state, regional or local plans.

The operations of the thermal loop facility will be conducted under Geothermal Production Permit No. 4-75 issued by Imperial County on February 24, 1975. This permit imposes conditions

on operation primarily intended to protect the local environment. Approvals for the facility have also been obtained from the California Regional Water Quality Control Board and the Imperial County Division of Public Works. The California Division of Oil and Gas has approved plans for well operations associated with the project. A California Environmental Impact Report (EIR), required under the California Environmentla Quality Act (CEQA), was prepared by Imperial County in 1973.

IV. SUMMARY AND CONCLUSION

The maximum anticipated environmental impact of the thermal loop experimental facility is disruption of a small part of the leased tract. The benefits anticipated are the development of new techniques and equipment to allow utilization of the Salton Sea geothermal resource, and the development of equipment which may markedly increase the opportunities for utilization of hydrothermal geothermal resources in general. In view of the comparatively insignificant environmental consequences of the thermal loop facility, it is concluded that ERDA participation in the construction and operation of the thermal loop facility is warranted.