285
1-19-78

Ch. 1764

FE/WAPO/0016-1

FOSSIL ENERGY

OPERATIONAL STATUS AND CURRENT TRENDS IN GAS TURBINES FOR UTILITY APPLICATIONS IN EUROPE

By
Robert A. Harmon

MASTER

August 16, 1976

Work Performed Under Contract No. EX-76-X-01-0016

Division of Coal Conversion and Utilization
Energy Research and Development Administration
Washington, D. C.

U. S. DEPARTMENT OF ENERGY

DISTRIBUTION OF THIS DOCUMENT IS UNLIMITED

NOTICE

This report was prepared as an account of work sponsored by the United States Government. Neither the United States nor the United States Department of Energy, nor any of their employees, nor any of their contractors, subcontractors, or their employees, makes any warranty, express or implied, or assumes any legal liability or responsibility for the accuracy, completeness or usefulness of any information, apparatus, product or process disclosed, or represents that its use would not infringe privately owned rights.

This report has been printed directly from copy supplied by the originating organization. Although the copy supplied may not in part or whole meet the standards for acceptable reproducible copy, it has been used for reproduction to expedite distribution and availability of the information being reported.

Available from the National Technical Information Service, U. S. Department of Commerce, Springfield, Virginia 22161.

Price: Paper Copy $7.25
Microfiche $3.00

DISCLAIMER

This report was prepared as an account of work sponsored by an agency of the United States Government. Neither the United States Government nor any agency thereof, nor any of their employees, makes any warranty, express or implied, or assumes any legal liability or responsibility for the accuracy, completeness, or usefulness of any information, apparatus, product, or process disclosed, or represents that its use would not infringe privately owned rights. Reference herein to any specific commercial product, process, or service by trade name, trademark, manufacturer, or otherwise does not necessarily constitute or imply its endorsement, recommendation, or favoring by the United States Government or any agency thereof. The views and opinions of authors expressed herein do not necessarily state or reflect those of the United States Government or any agency thereof.

DISCLAIMER

Portions of this document may be illegible in electronic image products. Images are produced from the best available original document.

FE/WAPO/0016-1
Distribution Category UC-90f

OPERATIONAL STATUS AND CURRENT TRENDS IN GAS TURBINES FOR UTILITY APPLICATIONS IN EUROPE

By
Robert A. Harmon
Consultant
Latham, New York

NOTICE
This report was prepared as an account of work sponsored by the United States Government. Neither the United States nor the United States Department of Energy, nor any of their employees, nor any of their contractors, subcontractors, or their employees, makes any warranty, express or implied, or assumes any legal liability or responsibility for the accuracy, completeness or usefulness of any information, apparatus, product or process disclosed, or represents that its use would not infringe privately owned rights.

August 16, 1976

Prepared For
FOSSIL ENERGY ORGANIZATION OF
ENERGY RESEARCH AND DEVELOPMENT ADMINISTRATION
DIVISION OF COAL CONVERSION AND UTILIZATION
ADVANCED POWER SYSTEMS
Washington, D. C.
Under Order No. 76 - 16

DISTRIBUTION OF THIS DOCUMENT IS UNLIMITED

ABSTRACT

The purpose of this investigation was to ascertain the operational status and current trends in gas turbines for electric utility applications in Europe. To obtain a quick, comprehensive perspective of the situation a number of selected organizations were contacted by letter and personal visits; readily available pertinent literature was reviewed.

European gas turbine manufacturers have been subjected to the same broad business and economic pressures being experienced in the U. S. - inflation, tight money, business recession, depletion of energy resources brought into focus by the 1973 oil embargo, nationalistic desire for energy independence or reduced oil imports, and conflicting concern for the environment and long term public health and safety. As a result utility load growth approached zero and even experienced negative percentages in 1974 and 1975. Correspondingly the market for utility type turbines almost disappeared in Europe; consequently most utilities had excess reserve generating capacity - some as high as 40%. Gas turbine manufacturers survived by supplying markets in oil producing countries, developing countries and sectors of the market less affected by the business recession (oil and gas; chemical and process industries).

With business recovery starting to take effect at the beginning of 1976, power demand is also beginning to rise again. With retirement of old or less efficient equipment and absorbtion of the excess reserve capacity, requirements for new machines are anticipated - some as early as 1978. Activity in this direction is apparent in discussions, quotes and some orders for new plants.

The impact of these general trends on gas turbine operation and design trends is reflected in the following:

- Annual operating hours on simple cycle gas turbines is very low in favor of more efficient combined cycle or steam plants which comprise part of the present excess reserve capacity.

- Economics indicates need for higher single unit ratings. European manufacturers are now making single gas turbine units available in the 100 MW power range.

- Inquiries and discussion of new plants are predominantly for more efficient systems - combined cycles and/or exhaust heat utilization.

- Combined heat and power plants are getting much more attention. Exhaust heat is used for district heating or industrial process requirements. Combined cycles, particularly with supplementary firing provide increased power and efficiency.

- Re-powering of existing steam plants is an attractive approach which has been demonstrated and should expand in use. An obsolete boiler is replaced by a gas turbine and a heat recovery boiler which feed an existing steam turbine generator. It increases capacity and efficiency.

- Ability to burn (or handle) dirty fuels is important. The generally typical European designs with only one or two very large combustion chambers have traditionally been used for a wide variety of fuels and now appear very appropriate for the current emphasis on heavy fuels and coal derived fuels. Various fuel treatment systems are required in accordance with the specific fuels.

- Closed cycle gas turbine plants are receiving renewed consideration because of their: good operational experience with dirty fuels including coal, flexibility in supplying varying amounts of heat and power with independent control, low pollution characteristics, ability to use over 80% of the heat content in the fuel, and potential for advantageous use in direct cycle, gas cooled nuclear power stations.

- Broad use of nuclear energy appears inevitable. The potential advantages of direct cycle gas cooled systems with helium turbines offer incentives of increased efficiency, safety, and lower cost. Work continues in this direction in Switzerland, Germany, and to some extent in France. The big commitment in France is the liquid metal fast breeder reactor.

- Component trends, following the trends established by U. S. manufacturers, are toward higher turbine inlet temperatures (1700 to 2000 F) made possible air cooled nozzle vanes and blades and toward higher compressor pressure ratios and variable geometry.

Gas turbines are expected to play an important and continuing role in the utility industry in accordance with its changing requirements.

Acknowledgement: The guidance, support, and participation of Dr. Curt Keller, Director of Research (Retired) Escher Wyss, Kusnacht, Switzerland is greatfully acknoledged. His assistance in making European contacts and in helping to gather and prepare the material on closed cycle gas turbine systems were key elements of this investigation.

Mr. Carey A. Kinney, Advanced Power Systems, was the Technical Representative for ERDA.

TABLE OF CONTENTS

		Page
ABSTRACT		
ACKNOWLEDGEMENT		
I.	OBJECTIVE AND APPROACH	1
II.	MARKETS AND REQUIREMENTS	2
	A. Overview of Recent History, Market Size and Trends	2
	B. Nature and Composition of Markets	7
	C. Implications for Gas Turbines	18
III.	MANUFACTURERS	19
	A. U. S. Companies Selling Into European Markets	19
	B. European Manufacturers	26
	C. Other Manufacturers	33
IV.	OPEN CYCLES	35
	A. Simple Cycle	35
	B. Recuperative Cycles	39
	C. Combined Cycles	40
	D. Special Cycles	49
V.	CLOSED CYCLES	53
	A. Overview	53
	B. Closed Cycle Operating Experience	53
	C. Characteristics - General Cycle Description and Components	61
	D. Key Advantages	65
	E. Design Features, Trends, and Problem Areas	68
	F. Potential Markets and Special Applications	74
VI.	NUCLEAR CYCLES	81
	A. General Comments	81

TABLE OF CONTENTS (continued)

		Page
	B. Direct Cooled Nuclear Systems	81
VII.	COMPONENTS	88
	A. Compressors	88
	B. Turbines	89
	C. Combustion Systems	93
	D. Emissions	100
	E. Heat Exchangers	102
	F. Controls	103
VIII.	FUELS	104
	A. Natural Gas and Light Distillates	104
	B. Heavy, Crude and Residual Fuels	104
	C. Coal Derived Fuels	106
IX.	MAINTENANCE, OVERHAUL AND REPAIR	111
X.	SUMMARY AND CONCLUSIONS	113
XI.	RECOMMENDATIONS	117
LIST OF REFERENCES		118
APPENDIX A - ORGANIZATIONS CONTACTED		128

OPERATIONAL STATUS AND TRENDS IN GAS TURBINES FOR UTILITY APPLICATION IN EUROPE

I Objective and Approach

The purpose of this investigation is to provide a quick, comprehensive review of the present capabilities and directions of development for gas turbines which are used in utility applications. Prime interest is nominally focused on European installations and manufacturers.

This broad review should be useful in reinforcing the rationale for current domestic development programs and perhaps identifying areas where additional effort or change in emphasis should be considered to fill gaps or avoid duplication of effort. The over-all perspective on this important sector of the industrial economy will help orient people who have not been closely associated with this increasingly complex part of the gas turbine industry.

To achieve these objectives information was gathered from a number of selected manufacturers and the current literature related to the subject. A list of the manufacturers who participated (either by corresponence and/or personal interview) is given as Appendix A. The various publications and documents used are referred to by number in the text which refer to the List of References at the end of the report.

This investigation was conducted over the period from March 15, 1976 to July 15, 1976.

To understand the current status, it is first necessary to establish the context, or markets, their requirements and characteristics, into which gas turbines are being sold. The incentives and circumstances under which gas turbines satisfy these requirements and the competitive forces motivating further improvements are important. It is also important to have some information about the manufacturers, not only in Europe per se, but also about manufacturers in other parts of the world who are selling equipment into the European markets. This paves the way for the more detailed discussion of: the various open cycle configurations; closed cycle experience (problem areas, and potential); nuclear gas turbine cycles; components; fuels; and overhaul, installation and maintenance.

II Markets and Requirements

A. Overview of Recent History, Market Size and Trends

Although this investigation is primarily concerned with gas turbines for utility applications in Europe, it is important to view this segment of the industry and its markets in the proper overall context. Because, generically, gas turbines are inherently flexible and versatile in their ability to satisfy a variety of applications, the gas turbine industry and its associated technology have evolved along numerous paths according to the shifting demands from a diverse number of market segments. Quite often advancements and achievements in one segment are applicable to other segments. Perhaps this explains not only the complexity of the gas turbine industry, but also its basic strength and ability to respond to the continuing changes in the economy and business climate.

It is also well recognized that, because of the basic conservatism of the utilities and the lack of necessity, the use of gas turbines for public electric power generation was very limited before 1965. Then, as a result of the broadly publicized Northeast Blackout of November 1965 and wide concern about similar problems both in the U. S. and Europe, gas turbines were specified more frequently because they were quickly available. The total gas turbine generating capacity rose rapidly (1)*.

Consequently, early experience with gas turbines driving electric generators was accumulated more in the industrial environment of the chemical and process industry. The pipeline and, more recently, off-shore platforms have also used gas turbines for electric power generation as well as for compressor and pump drives. Similarly, marine applications have used gas turbines to drive generators. Although the power levels of these units are often small compared to normal requirements for utility applications, the operating experience and the machinery technology involved has provided important elements and building blocks for the larger utility applications.

Rapid increase in the use of gas turbines for utility applications continued until about 1973; and many of the major manufacturers by that time had put large capital equipment and investments in place to take advantage of what appeared to be a very large and continuing growth market at about 6.5% per year doubling about every 10 years (2). Full development of another generation of gas turbines in 100 MW power range was in progress at several companies. Economic studies have shown that the larger units give higher return on investment following the trend in fossil-fired and nuclear plants - the larger the better. Plant siting and emissions seemed to be the major problems.

---

* Numbers in parentheses designate References at the end of the report.

Gas turbines promised to play a major role in this developing market. It was predicted in 1973, "By 1985 ten percent of all electric power generated in the world will come from gas turbine driven generators" (6). At this point the oil embargo was imposed triggering the energy crisis (fall of 1973) which was always considered somewhere off in the future. Almost coincident with that came a general recession and a money crisis of sorts (combination of inflation and high interest rates) all of which had important impacts on utilities in both Europe and the United States (5).

The growth in load demand flattened to very little increase, or negative for some systems, revenues reduced; new equipment orders were either cancelled or stretched out. Many utilities in Europe and the U. S. now have excess generating capacity (16). Motivated by the energy crisis and high priced fuel, broad movements are now in progress toward: more efficient power systems (exhaust heat recovery, combined cycles, and higher operating temperatures), and use of non-petroleum based fuels or sources of energy. The most immediate and plentiful source of energy is coal - both in Europe and the U. S. This is discussed in more detail in Section VIII-C. Nuclear energy will ultimately fill much of the baseload power generation requirements, but there are also many ramifications to that approach particularly regarding gas turbines (See Section VI).

Now it appears the world is recovering from the recession and the economy in America is improving followed at varying distances by the European countries. Accordingly, as industrial and business activity increases, so does the demand for electric energy. The load growth in the U. S. for 1976 has been projected from 6.0% (8) to as high at 10% and subsequent return to a normal 6.5% load growth per year (3,9). One estimate for Germany was 8% which is partially explained by their apparently strong economic recovery (10). Excess capacity and old inefficient plants should begin to disappear rapidly. Increased activity aimed at new, short-term (between now and early 1980's) procurement of generating capacity is noted.

Fortunately between 1973 and 1976 other sectors of the gas turbine markets continued to grow. New orders, mostly for established machines, came from the oil and gas industry, offshore platforms, some European utilities, and many of the oil producing countries which are trying to improve their economies. However, although the large, 100 MW, machines for utilities being developed in America were shelved, those in Europe for the "50 Hz market" were continued. At least one is in operation; several are on order. (These are discussed in Sections III and IV.) As a result, the over-all gas turbine industry continues to grow although at a somewhat reduced rate; competition has become more intense.

The world-wide nature of gas turbine markets is apparent from Fig. 1 which tabulates total gas turbine sales thru 1975 (7) by geographical area of the world and by country. Additional identification of current trends and projected market size and

Figure 1

WORLD WIDE GAS TURBINE HP SALES BY COUNTRY

COUNTRY	REPORTED HP PLUS 20% TO COVER ESTIMATED HP NOT REPORTED	TOTAL EACH SECTOR OF WORLD MARKET
EUROPE		39,047,211
Austria	368,220	
Belgium	613,957	
Denmark	633,125	
Finland	1,323,519	
France	3,096,178	
Germany (West)	8,818,031	
Greece	261,425	
Iceland	64,400	
Ireland	838,600	
Italy	2,198,070	
Luxemburg	33,000	
Netherlands & Antilles	1,995,745	
Norway	416,010	
Portugal	306,380	
Spain & Canary Is.	388,100	
Sweden	3,974,748	
Switzerland	315,065	
Turkey	980,290	
United Kingdom	11,721,348	
Yugoslavia	701,000	
CANADA & CENTRAL AMERICA		10,262,567
British West Indies	609,105	
Canada	5,182,822	
Caribbean Is.	165,200	
Costa Rica	86,600	
El Salvador	102,200	
Guatamala	71,100	
Honduras	95,400	
Mexico	2,645,760	
Nicaragua	57,000	
Panama	132,630	
Puerto Rico	936,150	
Virgin Is.	178,600	
SOUTH AMERICA		12,086,465
Argentina	3,366,955	
Brazil	2,046,750	
Chile	105,370	
Columbia	645,980	
Ecuador	258,280	
Peru	497,540	
Surinam	222,600	
Uruguay	289,910	
Venezuela	4,653,080	

COUNTRY	REPORTED HP PLUS 20% TO COVER ESTIMATED HP NOT REPORTED	TOTAL EACH SECTOR OF WORLD MARKET
MIDDLE EAST		19,531,271
ABU Dhabi State	513,510	
Aden	61,620	
Bahrein	171,220	
Ceylon	19,200	
India	596,305	
Iran	3,571,485	
Iraq	1,423,138	
Israel	2,002,620	
Jordan	49,400	
Kuwait	1,086,800	
Lebanon	130,050	
Oman	154,340	
Pakistan	204,940	
Pakistan East	559,200	
Pakistan West	386,200	
Persian Gulf States	551,875	
Qatar, Persian Gulf	183,820	
Saudi Arabia	5,984,788	
Syria	1,199,260	
Trucial States	681,500	
FAR EAST OCEANA		15,580.811
Australia	1,565,458	
Borneo	140,350	
Burma	36,800	
Far East & Oceana	1,497,630	
Hong Kong	239,570	
Indonesia	1,174,960	
Japan	5,868,343	
Korea (South)	858,000	
Malaysia	298,100	
New Zealand	1,560,150	
Okinawa	62,900	
Philippines	82,820	
Singapore	55,510	
Taiwan - China	1,614,010	
Thailand	230,450	
Tunghsiao	150,800	
Vietnam (South)	144,960	
AFRICA		9,912,549
Africa (Other States)	361,850	
Algeria	2,115,020	
Egypt (UAR)	455,550	
Gabon-West Africa	49,180	
Ivory Coast	31,500	
Kenya	55,340	
Liberia	247,500	
Libya	3,975,804	
Morocco	50,700	

Figure 1

COUNTRY	REPORTED HP PLUS 20% TO COVER ESTIMATED HP NOT REPORTED	TOTAL EACH SECTOR OF WORLD MARKET
Nigeria	1,458,985	
Senegal	54,000	
South Africa	583,650	
Southwest Africa	60,900	
Sudan	62,700	
Tunisia	236,720	
Zambia	113,150	
SOVIET STATES		5,329,645
China, Mainland	1,965,700	
Czechoslovakia	359,500	
Germany (East-DDR)	141,125	
Hungary	74,220	
Poland	130,060	
Rumania	351,280	
U.S.S.R.	2,307,760	
TOTAL OUTSIDE U. S. A.		111,750,519
UNITED STATES OF AMERICA		147,734,425
WORLD TOTAL as of January 1, 1975		259,484,944

key companies in the electric generation market are shown in Figs. 2 and three (9) for units over 15,000 HP and in Figs. 4 and 5 (11) for units between 1000 and 15,000 HP.

A world-wide survey (12) shows that gas turbine generating plants, both 50-Hz and 60-Hz, accounted for 12,009 MW of new orders in 1975 (machines below 1000 HP not included).

Additional perspective can be gained by viewing these figures in relation to the total U. S. electric utility installed capacity and the percentage of installed gas turbine capacity (Figs. 6 and 7) (5). Also illustrated is the relatively small amount of KW-hrs generated by these, essentially peaking and stand-by gas turbine units. Although the fuel rate is high, and the total capacity is 40,000 MW, they are not run long enough to use a lot of fuel. Because of the relatively low first cost, many billions of dollars were saved in owning and operating costs. It should also be noted that the percentage of gas turbine capacity is still relatively low - 8.4%. Figures 8 and 9 (4) show committed nuclear and fossil fired plants for the period from 1976-1994 and the types of fuels anticipated for fossil plants. According to that reference, the future role of gas turbines is not clearly defined, although very strong cases for the significant use of gas turbines are made by the manufacturers (2,5,6,9,11).

B. Nature and Composition of Markets

The above gives some indication of current and projected market size. Now consider the nature of the utility markets. Initially, gas turbines in the early 60's were essentially unproven in the utility application, so they were used for peaking service which nicely matched their fast start and low first cost characteristics. They proved dependable and because of rapid load growth, many were of necessity used for longer duration (more hours/year) than originally planned, - mid-range rather than peaking service. Incidentally, this lead to some higher maintenance and operating costs than originally anticipated.

The demand for quick, increased capacity was satisfied by a variety of turbine sizes from 2-3 MW (more suitable for the developing countries) up to 60-70 MW units (and more recently 100 MW units). The concept of multiple unit operation, where several packaged gas turbine units are grouped together on one site to provide large blocks of power , has become a demonstrated, viable concept. Also, because these packages can be preassembled and tested at the factory, the labor cost for assembly and erection on site (an important element of total cost particularly in an inflationary period) is greatly reduced relative to the traditional large, fossil-fired steam plants.

Since the energy crisis, the subsequent rapid rise in fuel prices and the uncertainty of fuel availability, closer scrutiny of the markets and approaches to energy conservation has revealed a number of non-technical as well as technical factors which affect

PROJECTED SHARES OF MANUFACTURERS BY ADDED UNITS/MW, 1976-1982

MANUFACTURER	NO. OF UNITS	PERCENT SHARE OF UNIT MARKET	MW	PERCENT SHARE OF MW MARKET
BBC/TURBODYNE	234	.118	11,835	.159
GEC	20	.010	1,280	.017
GENERAL ELECTRIC	790	.399	28,064	.377
KRAFTWERKE UNION	50	.025	4,250	.057
ROLLS-ROYCE	419	.212	6,557	.088
STAL-LAVAL	12	.006	1,152	.016
TURBO POWER & MARINE	227	.115	6,953	.093
WESTINGHOUSE	228	.115	14,364	.193
		10 20 30 40		10 20 30 40
Total	1,980	100%	74,455	100%

Fig. 2 Electrical Generation Market

Over 15,000 HP

PROJECTED ADDED MW BY MANUFACTURER, 1976-1982

MANUFACTURER/MODEL	AVER. MW	Thru75	76	77	78	79	80	81	82	Total
BROWN BOVERI/ TURBODYNE										
Type 9	32	896	384	320	320	320	288	192	192	2,912
Type 11	42	4,032	420	504	588	630	799	840	840	8,652
Type 13	83	1,660	332	498	498	664	747	830	830	6,059
Type 15/17	100	-	-	-	-	200	-	200	400	800
Subtotal		6,588	1136	1322	1406	1814	1834	2062	2262	18,423
GEC										
EM610	69	192	128	128	256	256	192	192	128	1,472
GENERAL ELECTRIC										
LM2500	19	76	38	38	76	76	144	152	190	760
MS5000 Series	25	32,100	2000	2050	2100	2050	2000	2000	1900	46,200
MS7001	64	13,568	896	1024	1280	1792	1920	1536	1152	23,168
MS9001	92	184	184	368	552	552	552	736	920	3,864
Subtotal GE		45,928	3118	3480	3824	4470	4586	4424	4162	73,992
KRAFTWERKE UNION										
V93/V94	85	2,720	340	425	425	680	765	765	850	6,970
ROLLS ROYCE										
Avon	13	1,820	390	442	455	377	351	312	234	4,381
Olympus	18	2,160	432	540	684	684	648	576	432	6,156
Subtotal R-R		3,980	822	982	1139	1061	999	888	666	10,537
STAL LAVAL										
GT-120	21	1,386	-	-	-	-	-	-	-	1,386
GT-200	96	-	96	-	96	96	192	288	384	1,152
Subtotal Stal Laval		1,386	96	-	96	96	192	288	384	2,538
TURBO POWER & MARINE										
GG4/FT4	25	21,075	950	750	825	825	675	625	575	26,300
FT-50	96	96	-	-	192	-	-	384	1152	1,824
Subtotal TP&M		21,171	950	750	1017	825	675	1009	1727	28,124
WESTINGHOUSE										
W-251	32	3,840	384	448	512	576	576	576	576	7,488
W-501/W-1101	94	10,810	1128	1316	1316	1692	1880	1880	1504	21,526
Subtotal		14,650	1512	1764	1828	2268	2456	2456	2080	29,014
GRAND TOTAL (MW)		96,615	8102	8851	9991	11470	11699	12084	12259	171,071

Fig. 3 Electrical Generation

Over 15,000 HP

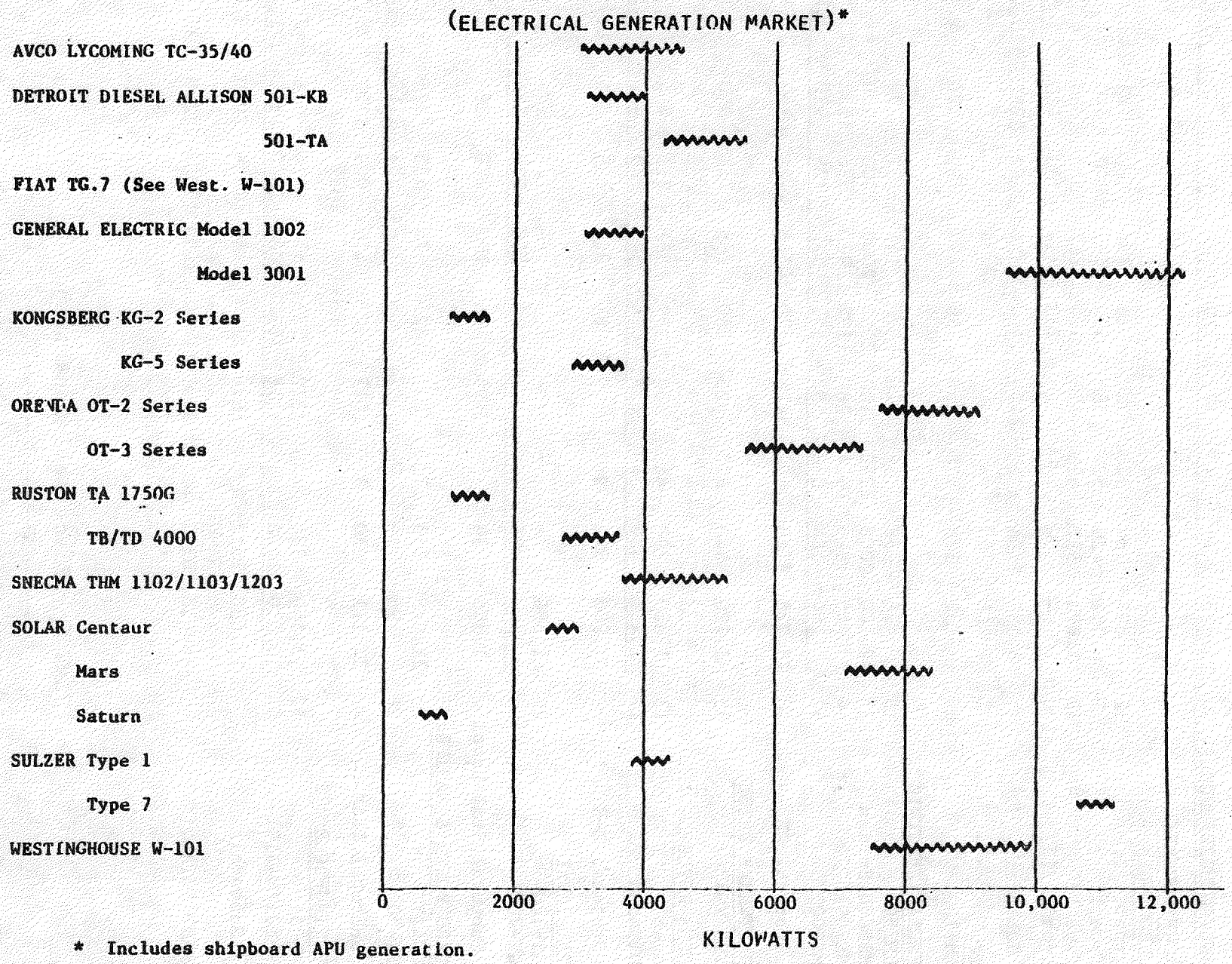

* Includes shipboard APU generation.

Fig. 4 Competitive Gas Turbine Systems, 1,000 - 15,000 HP Class

MANUFACTURER/MODEL	Multiplier Average KW	Thru 1974 MW	Thru 1974 UNITS	1975 MW	1975 UNITS	1976 MW	1976 UNITS	1977 MW	1977 UNITS	1978 MW	1978 UNITS	1979 MW	1979 UNITS	1980 MW	1980 UNITS	1981 MW	1981 UNITS	TOTAL MW	TOTAL UNITS
AVCO LYCOMING TC35/40	3,500	21.0	6	21.0	6	28.0	8	35.0	10	49.0	14	70.0	20	84.0	24	84.0	24	392.0	112
DETROIT DIESEL ALLISON 501-KB	3,500	385.0	110e	84.0	24	84.0	24	98.0	28	112.0	32	126.0	36	126.0	36	168.0	48	1,183.0	338
GENERAL ELECTRIC Model 1002	3,500	10.5	3	7.0	2	10.5	3	14.0	4	14.0	4	14.0	4	21.0	6	28.0	8	119.0	34
GENERAL ELECTRIC Model 3001	10,500	714.0	68	21.0	2	21.0	2	21.0	2	21.0	2	31.5	3	31.5	3	31.5	3	892.5	85
KONGSBERG KG-2	1,200	228.0	190e	38.4	32	43.2	36	45.6	38	50.4	42	57.6	48	62.4	52	72.0	60	597.6	498
ORENDA OT-2	8,500	17.0	2	8.5	1	8.5	1	8.5	1	17.0	2	17.0	2	25.5	3	25.5	3	127.5	15
ORENDA OT-3	6,500	115.5	33	10.5	3	14.0	4	14.0	4	14.0	4	17.5	5	21.0	6	21.0	6	227.5	65
RUSTON TA 1750G	1,300	390.0	300	62.4	48	85.8	66	93.6	72	104.0	80	106.6	82	110.5	85	110.5	85	1,063.4	818
RUSTON TB/TD 4000	3,100	111.6	36e	31.0	10	37.2	12	43.4	14	49.6	16	49.6	16	55.8	18	55.8	18	434.0	140
SNECMA THM 1102/1103/1203	4,300	107.5	25	12.9	3	8.6	2	12.9	3	17.2	4	17.2	4	17.2	4	17.2	4	210.7	49
SOLAR Centaur 4000	2,500	125.0	50e	50.0	20	50.0	20	62.5	25	62.5	25	87.5	35	100.0	40	100.0	40	637.5	255
SOLAR Saturn	850	1,020.0	1200	110.5	130	110.5	130	106.3	125	106.3	125	114.8	135	136.0	160	144.5	170	1,848.8	2175
SULZER Type 1	4,000	116.0	29	4.0	1	8.0	2	8.0	2	12.0	3	12.0	3	8.0	2	8.0	2	176.0	44
SULZER Type 7	10,000	-	-	-	-	-	-	-	-	-	-	10.0	1	20.0	2	20.0	2	50.0	5
WESTINGHOUSE W-101	8,500	561.0	66	68.0	8	68.0	8	68.0	8	85.0	10	85.0	10	85.0	10	68.0	8	1088.0	128
TOTALS Megawatts		3,922.1		529.2		577.3		630.8		714.0		816.3		903.9		954.0		9,047.5	
Units			2,118		290		318		336		363		404		451		481		4,761

NOTE: Includes all forms of continuous and standby generation -- utility, industrial, offshore platforms, and shipboard generation. The "Thru 1974" figure contains the best data available regarding actual production to that point. Estimates are through the end of each calendar year. The multiplier represents the typical or average rating in kilowatts.

e = estimated

Fig. 5 Projected Generation Market, 1975 - 1981
(1,000 -15,000 HP Range)

1974 UNITED STATES

ELECTRICAL POWER GENERATION

	MW CAPACITY	BILLION KWH
Total	476,000	1864
Gas Turbine	40,000	31
% GT	8.4%	1.66%

Figure 6

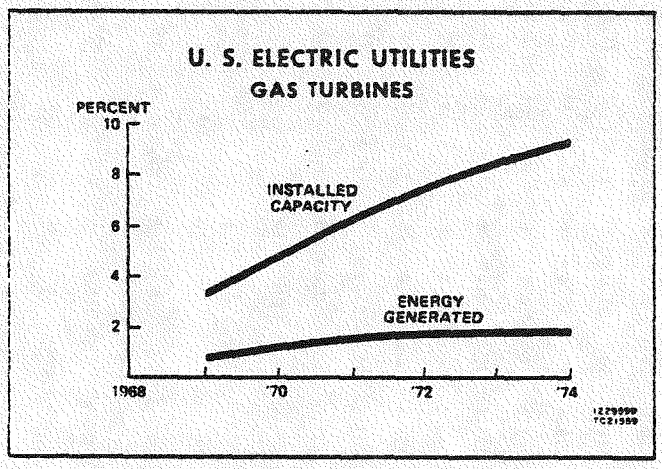

Figure 7

	FOSSIL NO. OF PLANTS	MW*	NUCLEAR NO. OF PLANTS	MW
1976	40	18,864	9	8,453
1977	34	15,845	11	10,348
1978	24	11,834	6	6,429
1979	33	16,882	12	11,353
1980	29	15,495	13	13,530
1981	21	11,981	17	16,910
1982	15	8,651	24	26,575
1983	15	8,502	19	21,124
1984	6	4,360	19	21,340
1985	3	2,070	18	18,536
1986	1	500	10	11,998
1987	2	1,650	7	8,110
1988	—	—	4	4,530
1989	—	—	4	4,930
1990	1	800	2	2,050
1991	1	800	—	—
1992	—	—	1	1,150
1993	1	800	—	—
1994	—	—	1	1,200
Indef.	14	10,871	14	16,076
TOTAL	240	129,905	191	203,487

*Does not include 3,626 MW of Combined cycle.

Fig. 8 Committed Generating Plants, 1976 - 1994

FUEL	NO. OF PLANTS	% OF PLANTS
Coal	160	66.7
Oil	32	13.3
Gas	2	0.8
Lignite	16	6.7
Combination	30	12.5

Fig. 9 Types of Fuels for Committed Fossil Plants

gas turbines and their use by utilities.

Perhaps the most significant factor, in view of the current situation, is that electric energy and heat energy are generally supplied by separate, competing organizations. This seems to be the case whether or not it is a public or private utility. Traditionally, power companies sell only electricity and strongly resist any other organization generating their own power on site. The whole system is optimized or dedicated to supplying electric power only. Even for industrial complexes, the local power company usually wants to supply the electric power. Other organizations or the industrial organization itself supplies the needed heat or process energy. Efforts of gas companies to promote total energy systems several years ago (before the oil embargo and the gas shortage) encountered this problem. Usually the total energy installations were cut-off completely from the local power grid and had to be entirely self-sufficient.

In a few special instances, industrial organizations build power plants which were leased to and operated by the local utility. Electric power and heat (hot water, air or steam) were supplied to the industrial complex; extra electric power was put into the utility grid (1). In early 1973 this seemed to be a logical trend which was starting. It provided a more efficient use of all of the energy involved.

With notable exceptions, the situation is the same in Europe particularly in France (Electricite de France) and England (Central Electricity Generating Board) (14) where all electric power is provided by one nationalized utility. In places where the responsibilities for power and heat are separate, little or no effort is made to optimize or minimize the total energy consumption (See Also V-B; Spittelau Plant). There is a trend toward combined cycles and exhaust heat recovery to generate steam for steam turbines, but this again results only in electricity. Efficiencies for combined cycle plants are typically in the 40-50% range, whereas heat utilization in an integrated heat-power plant can exceed 80%. It should be noted that exhaust heat is also being used for water de-salination in arid countries like the Middle East where fresh water is limited.

On the other hand, where responsibility for both heat and electricity is vested in one organization, there are inherent incentives to consider integrated heat-power systems which supply both power and heat and are optimized, based on the total energy required by the area. There are a number of cities like this in Germany, Austria, Scandanavia (Norway, Sweden, Finland, and Denmark), and Switzerland. These countries have both private and publicly owned utilities.

Thus, from inquiries, requests for quotations, and actual installations, several manufacturers note a trend emerging toward wider use of combined electric power/district heating plants where over-all heat utilization is in the order of 80%. The

size of the plant is generally smaller than the very large steam and nuclear central station plants. Both open and closed cycle gas turbines are being considered for these applications.

Other factors which contribute to this trend are:

- The higher price of fuel makes the price of heat energy delivered to the customer start to approach the price of electric energy delivered to the customer particularly in Germany and Switzerland.

- An analysis shows that the cost per KW of installed capacity plus the installed cost of the electric transmission and distribution system has not changed a great amount (Fig. 10) (15). As the size of the plant gets larger the price per KW gets smaller, but the larger plant must be located further from the load centers (customers) and the cost of the transmission system goes up.

- Size, complexity, and attendant investment in very large, remotely sited nuclear and fossil plants may warrant interim consideration of smaller, lower risk plants located close to the load centers.

Still other factors affecting the use of gas turbines include:

- The utilities have traditionally used fossil fired steam plants; they are rightfully very conservative and integrate new types of machinery slowly and only when they are fully proven and demonstrated or when very unusual circumstances (like inadequate reserve capacity) arise. Many of the utility people, particularly in the operating and production areas, feel that steam systems are better understood and easier to operate than gas turbines - a matter of familiarity and natural resistance to change.

- Quite often architect and engineering contractors are in a position to influence decisions about types of power systems. Unless there are unusual delivery requirements or other extenuating circumstances, their incentives are to select steam plants: established and accepted technology; their fees are usually based on a percentage of the installed cost. Installed cost of a steam plant is usually larger than that of a comparable gas turbine plant (See Section IV).

- Valid comparison of various types of power plants for a particular application, particularly when considering various combinations of cycle configurations and operating parameters, usually becomes quite complex. Such comparisons are subject to criticisms; many gas turbine manufacturers often feel that some of the significant cost, efficiency and performance factors are inadvertently excluded when comparing steam plants to gas turbine systems. Such items might include: condensing and/or cooling tower systems, fuel treatment and handling systems, water treatment, steam generators,

Transmission Facilities

Total Cost of Power Stations

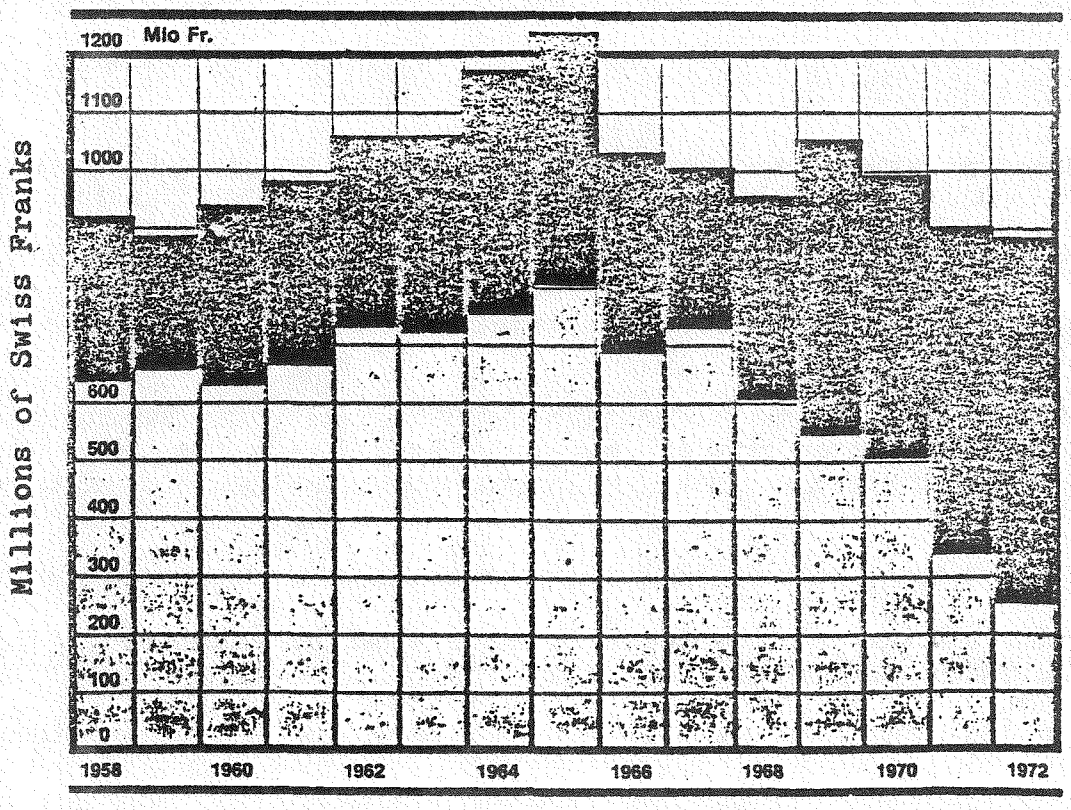

Fig. 10 Total Cost from All Swiss Public Utilities for Power Stations and Transmission Facilities

forced draft blowers, condensate system, emission controls, silencing system, etc.

- The increasing number of large nuclear plants is expected to increase reserve capacity requirements. For example, in Germany previous reserve requirements ranged from 9-10%; this is being raised to 19%. In 1976 the reserve is about 25%, but this excess capacity is beginning to recede. Average load growth estimates range from 6.5% to 8.5% per year in the 1976-1980 period. This means new fossil fired plants will be required by 1978 assuming 19% reserve requirement and 6.5% average load growth. German estimates for minimum lead time to build new plants are: 66 months - nuclear, 40 months - coal, and 14-24 months - gas turbine (depends on stock availability of critical parts at time of order).

- A competitive factor which could influence some gas turbine applications is a growing interest in air storage (23-29) and pumped (hydraulic) storage to satisfy peak power demands (30-33). For example, Electricité de France plans on using hydraulic storage for peaking. Of course availability of natural reservoirs has an important effect on the economics of this approach.

  Air storage would use gas turbines of somewhat different configuration than that of conventional gas turbines. The first air storage utility plant is scheduled to start-up in Huntorf, Germany in mid-1977 (34,35).

- Emissions constraints are also important in Europe except, the philosophy for applying them seems to be more selective and pragmatic (19,20). In geographical areas where air pollution is very high, emission limits on power plants are very low and very strict. (It should be noted that sulfur content of typical European coal is low.) Concern for noise pollution seems to be somewhat higher in Europe than in the U. S.

- Concern about the conservation and availability of petroleum based fuels is high. Where coal is potentially available, taxes are used to encourage utilities to use coal. This is true, for example, in Germany, but it was pointed out that coal is now treated as a Common Market resource. Independent action by any one country in regard to coal is limited. Special approval is required to build a plant which uses natural gas fuel. There are no coal resources in France; hence, Electricite de France is now totally committed to nuclear power; no more fossil fueled plants are planned. Yet most of the gas turbine manufacturers expect to be burning petroleum based liquid (very little or no gas) fuels at least until the early 1980's. Even with higher fuel cost, the gas turbine combined cycle offers the lowest cost to own and operate a power plant (See Section IV - C).

C. Implications for Gas Turbines

The above market trends and status make it very difficult to make quantitative predictions about the size and growth rate of the markets. Much depends on the rate of recovery of the U. S. and European economies. Modest growth is expected in Europe; larger growth is expected in the Middle East, Indonesia, Australia, the Far East and the developing countries. Additional stretchouts and delays in nuclear plants and major shifts toward the "electric economy" could cause severe short term power shortages and large peak power demands. This, in turn, could cause much larger demand for gas turbines than presently contemplated.

Pressures from the above market requirements and trends are pushing toward:

- More efficient systems (Combined cycle, heat recovery, and higher operating temperatures).
- Higher powerplant productivity (17).
- Repowering of old steam plants with gas turbines (18,20,21).
- Use of lower grade liquid fuels - ultimately coal derived fuels.

III Manufacturers

Almost all gas turbine manufacturers consider the markets for their products on a comprehensive, global basis. They try to satisfy the diverse requirements of electric power generation, pipeline, marine, and process applications with variations of a basic turbomachinery product line. Of course the emphasis shifts with each manufacturer and market segment. They sell direct and through licensees and manufacturing associates in accordance with the particular countries and markets involved. These factors should be kept in mind in going through the material below.

Each manufacturer is discussed briefly focusing mainly on electric power generation and European activities. They are categorized as: U. S. companies selling into European markets, European companies, and other manufacturers.

A. U. S. Companies Selling Into European Markets

1. General Electric Company, Schenectady, NY (Heavy Industrial)

World-wide operating experience according to model number and by type of application is shown in Figs. 11 and 12 (22). The number of units, 1230, and operating hours, 11,874,325, is an indication of the relative importance of electric utility power application. About 120 units have been fired for over 100,000 hours of operation; two units have been fired for over 180,000 hours. Principal units for utility application are the MS5000 Series (19-27 MW range), the MS7000 series (50-65 MW range) and the MS9000 series (87-98 MW range). The 7000 series machine is relatively new with only 199 units shipped as of January 1976, none to the European market.

The MS9000 series machine is basically a scaled version of the MS7000 series based on the field experience, problems and solutions encountered with the smaller unit. Because the potential for fast growth of the worldwide power generation market (60% estimated to be for 50 Hz systems), GE's Gas Turbine Division and Alsthom, its Manufacturing Associate in France, entered into a joint product development agreement in 1969 to design, develop and manufacture a 100 MW-class gas turbine uniquely suited to 50 Hz operation and meeting international market requirements. One simple cycle, MS9000 unit is now operating at the Electricite de France Bouchain power station (93). It was installed in the summer of 1975, as of May 1976 it has about 500 hours of operating time.

Most of the recent plants involve some form of exhaust heat recovery, or provision for subsequent addition of heat recovery, steam generation systems. Figure 13 (22) lists the GE combined cycles presently in operation with the date of initial service. It is of interest that the four European plants and one Far East plant were all MS5000 units. As indicated in Fig. 11 more Model

GE WORLD-WIDE OPERATING EXPERIENCE
1/1/76

MODEL	UNITS SHIPPED	OPERATING HOURS
1000	23	144,000
3000	558	32,026,400.
5000	1415	25,189,200
7000	199	659,000
9000	1	650 Ⓐ
TOTALS	2196	58,018,950

Ⓐ AS OF 3/1/76

Figure 11

GE WORLD-WIDE EXPERIENCE BY APPLICATION
1/1/76

	UNITS	OPERATING HOURS
ELECTRIC UTILITY POWER	1230	11,874,325
INDUSTRIAL POWER	249	9,830,000
INDUSTRIAL PROCESS	229	11,557,000
INDUSTRIAL PIPELINE	482	24,729,000
MARINE	6	29,625
	2196	58,018,950

Figure 12

CUSTOMER	GAS TURBINE & NUMBER		STATION OUTPUT (MW)	LOCATION	SERVICE
Oklahoma Gas and Electric Co.	1	8000	234	Oklahoma City Oklahoma	1963
City of Ottawa	1	3000	11.5	Ottawa, Kansas	1968
Wolverine Electric	1	5000	23	Big Rapids, Mich.	1968
City of Clarksdale	1	5000	26	Clarksdale, Miss.	1971
City of Hutchinson	1	3000	14.3	Hutchinson, Minn.	1972
Houlleries Du Basin De Lorraine	3	5000	343	Carling France	1972
China Light and Power	1	5000	27.3	Hong Kong Colony	1972
STEAG	2	5000	60	Kohlscheid, Germany	1973
Stadtwerke	1	5000	35	Saarbrucken, Germany	1974
Duquesne Light	3	7000	311	Brunot Island, Pa.	1974
Houston Power & Light	8	7000	594	Wharton, Texas	1974
Salt River Project	4	7000	336	San Tan Station, Az.	1975
Ohio Edison	2	7000	211	Loraine, Ohio	1975
Thermo Elektrana Brestanica	3	5001	94.2	Brestanica, Yugoslavia	1975

Fig. 13 Combined Cycles Utilizing GE Gas Turbines in Commercial Operation

5000 units have been shipped than any other model in the GE line; there is an extensive background (15 years and 25,189,200 operating hours) of operating experience behind it.

In addition to selling directly, GE also markets through its Manufacturing Associates. These manufacturing associates include the following companies:

- AEG - Kanis Turbinenfabrick GMBH, Essen, Germany
- Alsthom, Societe Generale De Constructions Electrique et Mechaniques, Belfort, France
- John Brown Engineering (Clydebank) Limited, Clydebank, Dunbartonshire, Scotland
- Kvaerner Brug A/S, Oslo, Norway
- Mitsui Shipbuilding & Engineering Co., Ltd, Tokyo, Japan
- Hitachi Shipbuilding & Engineering Co., Ltd. Osaka, Japan
- Hitachi, Ltd., Tokyo, Japan
- Thomassen Holland, bv, De Steeg, Holland
- Nuovo Pignone, Florence, Italy

It is of interest that 13 units, 237 MW, were sold for electric utilities in Western Europe directly by GE thru 1975; whereas the Manufacturing Associates accounted for 55 units and 1474 MW. The total GE units for electric utility applications thru 1975 was 68 units 1711 MW.

2. General Electric Co., Cincinnati, Ohio (Aircraft Derivative)

This branch of GE, the Marine and Industrial Products Department, is part of the Aircraft Engine Group. It occupies a unique position and is concerned with modifying the basic aircraft turbojet engines for industrial applications. The jet engine or industrial gas generator, is marketed to OEM organizations like Curtiss Wright, Dresser Clark, Ingersoll-Rand, Cooper Bessemer, etc., who in turn add a power turbine and integrate all of the components into a package for sale to the user.

Only the LM2500 (24,000 Continuous SHP) and a new gas generator, the LM5000 (52,100 Continuous IGHP) which will be available in 1977, are production products. Production of LM100's, LM175's and LM350's has been discontinued. The LM1500 is a first generation gas turbine. Only about 35 of these smaller units are in electric utility service with cumulative operating time to date of 191,311 hours.

Although only a few LM2500's have been sold through Curtiss Wright for power production on Mobil Oil's production platform in the North Sea, significant sales, particularly for the LM5000 are anticipated for electric power application. All units are expected to be operated as sirple cycle units.

3. Westinghouse Electric Company, Lester, PA

World-wide markets are served by Westinghouse directly and through its subsidianies and licensees.

Subsidiaries: Westinghouse of Canada, Ltd., Hamilton Ontario, Canada

A.C.E.C. (Ateliers de Constructions Electriques de Charleroi), Gent, Belgium

Licensees: Fiat - Mare, Torino, Italy

Mitsubishi Heavy Industires, Japan

The Generation Systems Division of Westinghouse sold a total of 547 units, equivalent to 17,992 MW since 1949; the Westinghouse affiliates sold an additional 375 units; grand total is 922 units.

Some statistics on these units are as follows:

- Electric Power Generation 435 units
- Mechanical Drive 112 units
- Turbines with heat recovery including 13 regenerative units 110 units
- Packaged plants - including 300 Econo-Pacs. 351 units

The data submitted did not break out the number of units sold in Europe, but it was something less than 375.

The current production units used mainly for power generation are the Model W251 (26-35 MW) and the W501 (70-97 MW). These units are being sold in various modular, simple cycle packages for intermittent (peak and reserve) duty applications called "Econo-Pacs". Emphasis is on low cost, ease of installation and high reliability. The basic units are also integrated into combined cycle configurations for continuous duty (base load) applications called PACE Systems (Power at Combined Efficiencies).

With the collapse of American utility market, Econo-Pacs and PACE systems have been applied more actively in overseas markets such as: Indonesia, Brazil, Mexico, Libya, Saudi Arabia, Yugoslavia, Belgium, Iran, and Italy. There is increasing emphasis on exhaust heat recovery not only for combined steam and gas turbine generation power, but also for process heat, district heating and desalination.

A third unit, Model 1101, (96 MW), was developed in conjunction with ACEC, Belgium, for the European 50 Hz market. It is not a scaled version of the W501, but a "modernized design for a new European frame size" (9). However, for practical purposes, the W1101 is the European equivalent to the U. S. W501B. One unit has been placed in operation by the Interbrabent Utility System in Belgium (9). (It has about 70 hours of operation.) Eight units have been sold.

4. United Technologies, Power Systems Division, Farmington, Conn.

A total of 998 UTC units, corresponding to 29,643,200 Max. HP, are on order and/or operating in the world as of March 1976. Of these some 740 units are being used in utility applications primarily as simple cycle peaking units; only 4 are combined cycle applications. As of May 1, 1976 these units have accumulated 3,919,900 hours of operation. Most of these installations have been in the U. S. except during 1975 when some 500 MW was sold overseas to countries such as South Africa, Ecuador, Dubai, Mexico, and Guatemala. Previously units were installed in New Zealand, Lybia, Venezuela, Saudi Arabia and Ecuador. Only two installations in Europe were noted - Finland and Belgium (9).

All of the UTC turbine packages are based on aircraft derivative gas generators. They package and sell complete power plants based presently on the GG4c gas generator which was derived from the P&W J75 turbo jet engine. (The GG3 and GG12 units are no longer in production.) The basic FT4 Power Pac (25 MW) is sold in a variety of packaged modular, configurations:

- TP4-2 Twin Pac (50 MW) - Two FT4's driving a single alternator with a gas turbine on either end.
- TP4-4 Twin Pac (100 MW)
- TP4-8 Twin Pac (200 MW)
- HC4-2 Hi Cap Power Pac (36 MW); two GG4 gas generators mounted perpendicular to the generator shaft and exhausting into a Worthington ER-224 double expander turbine.
- HC4-8 Cap Power Pac (145 MW); eight GG4 gas generators laid out like the letter "H" with four gas generators and two double expander turbines on each end of the generator.
- TSP-125 (155 MW) Turbo Steam Pac; two TP4-2 Twin Pacs with two unfired multi-pressure boilers and a double injection steam turbine.

In addition to the above power systems GG4 gas generators are used to power a wide range of equipment manufactured and packaged by associate manufacturers:

U. S.	Cooper Bessemer
	Dresser Clark
	Ingersoll Rand
	Worthington
	Curtiss Wright
Sweden	Stal Laval
Belgium	ACEC
Canada	Pratt & Whitney of Canada
Japan	Mitsubishi

It should be noted that in 1972 UTC and Stal Laval started joint development of an advanced heavy industrial turbine in the 72-100

MW range primarily for the power generation market. This development was to combine the latest applicable aircraft turbine technology of Pratt & Whitney with the heavy duty industrial turbine experience of Stal Laval. The prototype system was first tested in the U. S. in 1975 (41).

However, late in 1975 United Technology (P&W) Inc. suspended activities on the FT50 due to the changes in business and market requirements. Stal Laval is continuing development of their version of the engine which they designate, the GT200. They expect to test their prototype late in 1976 or early 1977; it will be followed by a second unit 6-8 months later. It will be offered in simple cycle and combined cycle (with unfired boiler) configurations.

As a result of the joint development program, the gas generator modules of the 50 Hz GT200 will be interchangeable with those of the 60 Hz FT50.

5. Curtiss Wright Corporation, Wood Ridge, NJ

In addition to advanced technology work on gear systems, blade cooling techniques and fluidized bed combustion, Curtiss Wright has introduced on a world wide basis a line of packaged electric power systems for both simple cycle peaking and combined cycle base load applications. Using the various available aircraft derivative gas generators from GE, Rolls Royce, and United Technology (P&W), they designed power turbines and modular packages ranging from Mod Pod 8 (6.8 MW) to Mod Pod 75 (66 MW) and total energy conversion, combined cycle systems from TEC 150 (150 MW) to TEC 400 (400 MW).

Although installations have been made in British Columbia, Kuwait, Australia, Africa, and New Zealand, no installations in Europe have been reported. However, three of six units planned for a Mobil North Sea platform will generate electric power. These will be Mod Pod 20's with GE LM2500 gas generators.

6. Solar, San Diego, Calif.

Solar is marketing three industrial units world wide: Saturn - 800-900 KW; the Centaur - 2500-2800 KW; and the Mars - 75 MW class.

The primary application of the Saturn has been electric power generation. Of the total production (2850 units through April '75) about 1200 have been for power generation, 950 for natural gas compressors, about 700 for mechanical drives. In terms of geographical area there are about 2000 in the U. S., 160 in Canada, 170 in the Middle East, 90 in Europe, 85 in Latin America, and the remainder spread around the world (11).

Deliveries of the Centaur started in 1969. An estimated 380 units are now installed in 10 major geographical areas of the

world as follows: 125 in the U. S., 55 in Europe, 58 in the Middle East, 40 in Latin America, 38 in Russia, 19 in Canada, 15 in Indonesia, 12 in the North Sea, 6 in West Africa, and 12 in other locations. About 50 electric generation sets, mostly for standby power are installed. Also installed are about 75 mechanical drive units and 250 gas transmission sets.

The larger Mars unit is just getting ready for production. First production shipments are scheduled for May 1978. Because of its larger rating it will probably be of more significance to the power generation markets in developing countries and small municipal power stations, but main markets will continue in the oil and gas industry.

B. European Manufacturers

1. Brown Boveri Corporation, Baden, Switzerland

A pioneer in the gas turbine field, BBC has installations dating back to 1938 and important gas turbine activities dating back to 1910.

Total units sold thru 1975, including earlier models is 386 units. The present product line is comprised of three basic types or models. The power range and number of units sold of each type are listed below:

Type 9	27-34 MW	32 units sold
Type 11	40-64 MW	118 units sold
Type 13	60-100 MW	27 units sold

These units are heavy duty, long life machines designed for industrial and utility markets. They are integrated into complete modular packages in accordance with customer requirements and are offered as simple cycle machines, simple cycle machines with exhaust heat recovery (fired or unfired), or combined cycle packages for electric power generation or industrial mechanical drive applications. A number of these units have operated over 100,000 hours.

Although they are sold all over the world, a primary markey for BBC turbines has been the oil producing nations of North Africa and the Middle East; secondary markets are in Europe. The manufacturer affiliates and licensees which play an important role in the development of these world-wide markets are:

Brown, Boveri & Cie, AG, Mannheim, Germany
Compagnie Electro-Mecanique, Paris, France
Tokyo Shibaura Electric Co. (Toshiba), Japan
IHI (Ishikawajima-Harima Heavy-Industries Co., Tokyo, Japan
Turbodyne Corporation, USA

The previous close association with Sulzer Bros. has been severed.

Consequently BBC now concentrates on units of 20 MW and above; whereas Sulzer works on units less than 20 MW.

BBC has also marketed a number of fossil-fired closed cycle gas turbine power systems. Several have been in operation over 100,000 hours (See Section V). This technology and experience is being extended to nuclear power plants where helium gas turbines are to be used in conjunction with direct high temperature gas cooled reactors. The direct, gas cooled system with no intermediate loop or heat transfer offers a number of interesting possibilities for the next generation of nuclear power systems (See Section VI).

Because of extensive experience with blast furnace gas power plants (15 units installed since 1951), it is believed that the basic combustion system and turbine design is well suited to use the low BTU gases from coal gasification plants. BBC has also been working toward the demonstration of air storage systems for peaking applications (34,35).

2. Kraftwerk Union, Berlin, Germany

Kraftwerk Union resulted from the 1969 merger of the power station departments, including the turbine and generator works, of Siemens AG and Allgemeine Elektricitats-Gesellschaft (AEG-Telefunken). This organiation encompasses factories, in West Berlin, Mulheim, and Ruhr with sales departments in Erlangen and Frankfurt, ten branch offices in West Germany, and 60 representatives abroad. It is also of interest that KWU is now an equal partner with Allis Chalmers in a subsidiary company, Allis Chalmers Power Systems, Inc. headquartered in West Allis, Wisconsin.

KWU markets fossil-fired steam plants, nuclear power stations and gas turbines on a world-wide basis.

Initial development of KWU gas turbines began in 1955 in the Siemens organization. As of September 1975 some 50 units have been sold with the first unit ordered in 1958 and installed in 1960. Initially the product line covered the power range down to about 8 MW, but now, based on strategy decisions in early '70's, KWU has elected to concentrate on the power generation market 60 MW and up. AEG-Kanis, a GE Manufacturing Associate is concentrating on the lower power levels up to about 30 MW and industrial markets.

KWU has now established two basic units: V93 (60.7 - 73.2 MW range) and V94 (88 - 100.4 MW range). At least 36 of these units have been sold through September 1975 (included in overall figure above). Most of the installations have been in Germany, Belgium, Holland, and Austria. Four units are in Scandinavia - three in Australia and several in the Middle East. Two, dual fueled V93's were ordered for base load operation in Qatar with exhaust heat recovered for seawater desalination.

The trend is to provide standard modular plants suitable for addition of exhaust heat recovery boilers and/or additional power modules. Peak, mid-range, and base load applications are in operation. Current emphasis is on combined cycle plants and district heating applications. The KWU trade name is "GUD" for Gas and Dampf (steam)type plants. The GUD type system is claimed to be unique in that it incorporates two steam pressure levels in the exhaust heat recovery boiler thereby recovering more of the heat available in the gas turbine exhaust and increasing the efficiency by about 5%.

Very large, separate combustion chambers permit physical entry and inspection of hot parts including the hot end of the turbine. Also such burners are adaptable to a very wide range of fuels. The burners can be replaced by coal gasification systems. This is being done at the Lunen plant where Lurgi gasifiers are providing hot gas to KWU turbines. This is the only full scale gas turbine powerplant operating on gasified coal (See Section VIII-C).

Although they are monitoring progress with gas cooled reactors, KWU is not currently involved with closed cycle gas turbines.

3. GHH (Gutehoffnungshutte SterkradeAG, Oberhausen, Germany

The GHH Group is comprised of 14 different German companies including MAN and MTU. Annual sales are around $3.5 billion. The industrial sectors covered include: basic and producer goods (mining equipment and equipment for shaping iron, steel and nonferrous metals), chemistry and chemical engineering (axial & radial compressors, piston compressors, industrial steam turbines, refrigeration turbines, blowers and heavy weldments), energy sector (steam powerplants and their components, components for nuclear powerplants, total nuclear plants, gas turbine plants, diesel power stations and their components, electrical conductors for power transmission),communication, transport, building industry, machining, services (planning plant and equipment, spare parts and maintenance), plant erection, plastics processing machines, and research.

It is of interest that Dresser Clark and De Laval are GHH licensees for industrial compressors.

GHH Sterkrade focuses primarily on the energy sector serving the electric utilities. They manufacture industrial and process compressors, steam turbines, tail gas turbines, LWR pressure vessels, turn-key power stations and closed cycle gas turbine plants. GHH was involved in all six closed cycle gas turbine plants now operating in Germany; and was the "turn-key" contractor for four of them (See Section V). GHH was also involved in the Lurgi coal gasification system for the Lunen plant. All of the GHH gas turbine activity is devoted to closed cycle systems for power and heat applications with fossil fuels (direct heating and industrial process heat) and for direct gas cooled nuclear plants.

4. Stal-Laval, Finspong, Sweden

As a member of the ASEA Group (large Swedish conglomerate), Stal Laval manufactures steam and gas turbines for utility, industrial and marine applications. In the past, Stal Laval sold over 50 "Power Pac" gas turbine plants ranging from 7.5 MW to 13 MW for the Swedish GT35 gas generator (first installation in 1956) and from 7 MW - 43 MW for P&W FT3, FT4, and Rolls Royce Avon gas generators. All of these installations used basic aircraft turbojet engines, modified for heavy industrial applications along with Stal Laval designed power turbines and installation packages. Applications were for standby sets, peaking units and base load units in Algeria, Turkey, Holland, Venezuela, Argentina, Finland, Sweden, Belgium, Canada, Canary Islands, England, USA, Hong Kong, and Australia. The high time unit in this group is a GT35 in Venezuela which has over 70,915 operating hours. Many of the aircraft derivative units have been run over 4000 hours depending on the application. Of course the peaking and standby applications do not build up operating hours very reapidly.

Stal Laval has also marketed an industrial turbine, the GT120 in the 50-70 MW range. Some 21 of these units have been sold to much of the same countries as the aircraft derivative units above since the initial installation in 1956. Six of these units have each operated over 10,000 hours; the high time unit is 28,292 hours.

The GT120 has an unusual arrangement in that it has a two-shaft gas generator with intercooling between the LP and HP rotors. The double-flow power turbine (two three stage expansion turbines) is remotely mounted. Two large, vertically mounted combustion chambers are also remotely mounted on either side of the gas generator.

Complete (GT120) packaged powerplants are offered either without or with exhaust heat recovery for combined cycle operation, district heat, or water desalination. The GT120 duet will generate 140 MW with two power turbines driving one generator from both ends. Components of the GT120 are also offered for air storage plants to satisfy peaking requirements up to 175 MW for five hours.

The GT120 was discontinued for for about two years starting in 1974. It has now been subjected to redesign to further improve its efficiency and design features. Current market trends toward fluidized bed combustion of coal, low BTU gas and low grade fuels as well as economic incentives for more efficient combined cycles, air storage peaking, district heating and other heat recovery schemes, has motivated reactivation of the GT120 in its improved design configuration.

The GT200/FT50 is a new machine in the 72-100 MW range with growth potential to 120 MW (See Section III-A above). One unit is on order to be commissioned in 1977. The initial testing of

the GT200 prototype is scheduled for late 1976. This unit combines the latest aircraft technology of blade cooling and design with the industrial gas turbine powerplant design and construction experience of Stal Laval. Modular packages with and without exhaust heat recovery are offered. The combined plant with a non-fired exhaust boiler will achieve 47% thermal efficiency (9,41).

5. GEC Gas Turbines, Ltd., Leicester, England

GEC Gas Turbines, Ltd. is an old-line manufacturer of power systems and combines the total experience of the former English Electric and AEI (Associated Electrical Industries) companies in gas turbine operations. The firm is well known producer of very heavy duty motors and generation equipment. However a major portion of GEC's efforts in the development and sale of power systems is devoted to mating the firm's driven equipment to gas turbines (gas generators) produced by other manufacturers. GEC manufactures the power turbine, the generator and the associated package. Gas generators are the Rolls Royce Avon, Olympus, and RB211 and also the GE LM2500 and LM5000 with 2- and 4-unit packaged systems available. These cover the power range from 10 to 100 MW.

Two heavy duty gas turbines are also manufactured by GEC; the EM85 (6.6 to 8.8 MW) and the EM610 (63-65 MW range). The EM610 is a relatively new unit; two have been sold to CEGB. Of the total number of gas turbines sold by GEC about one third are the heavy duty type and two thirds the aircraft derivative type. Applications are for both peak and base load operation. Packages incorporating exhaust heat recovery are available.

The primary market for GEC equipment has been the Central Electricity Generating Board and North Sea Platform applications. Growth is expected in export markets such as the Middle East, developing countries, Scandinavia and Australia.

6. Rolls Royce (1971) Limited, Ansty, England

The Industrial and Marine Division at Ansty is responsible for the design, development, manufacture, installation and service support of industrialized aircraft (aircraft derivative)engines for marine and hovercraft propulsion, power generation, oil and gas applications, and process industry applications. They also sell gas generators to a number of OEM's (original equipment manufacturers) for subsequent packaging and marketing. Principal OEM's are: GEC Gas Turbines, Ltd., Cooper Bessemer, Curtiss Wright Corp., Dresser-Clark, Ingersoll-Rand, and Kawasaki in Japan. Consequently systems have been sold all over the world, but main areas have been: England, Canada, Middle East, Australia, and Scandanavia.

The gas generators, power range and estimated number of units sold world-wide for industrial applications are as follows:

Avon	11 - 15 MW	683 units
Olympus	17 - 26 MW	215 units
RB211	19 - 21 MW	7 units

The RB211 has been only recently made available for industrial applications. Initial markets will probably be in oil and gas markets.

Initial industrial installation of an aircraft derivative Proteus unit was in 1959 for a power generation application. Since then large numbers of total running hours have been accumulated:

Industrial Olympus	-	279,728	Total running hours
Industrial Avon	-	5,043,400	Total running hours
Industrial Proteus	-	99,176	Total running hours
Industrial RB211	-	8,500	Total running hours

7. Sulzer Bros. Ltd., Zurich, Switzerland

Three Swiss manufacturers (Brown Boveri, Sulzer, and Escher Wyss) joined forces in the 1960's to form Brown Boveri-Sulzer Turbomachinery, Limited (BST): the complete line of turbines encompassed the power range from 3 MW to over 400 MW combined cycle plants. However, in the early 1970's these organizations again reorganized into two separate activities with Sulzer Brothers taking full responsibility for development, production, sales and service of all open cycle gas turbine systems under 20 MW and Brown Boveri taking responsibility for the larger open and closed cycle systems.

Thirty-eight older plants were sold ranging from 6 to 23 MW -- a total of 480 MW. These were open cycle machines, with and without recuperation and some with waste heat boilers. Twelve of these plants (100 MW total) operated on blast-furnace gas; some had dual-fuel burners for distillate fuels as well. Total operating hours driving blast furnace compressors, alternators, or both simultaneously is 800,000 hours; one plant had up to 140,000 operating hours. This experience is expected to be important for future gas turbines required to operate on low quality gaseous fuels from chemical processes, coal gasification systems, and crude or residual oil gasification systems.

Twenty-six plants are running on natural gas, crude-oil, residual oil and dual (gas and oil) fuels. The total installed capacity of these units is 380 MW; they have accumulated 1,200,000 operating hours driving pumps, compressors (mainly in oil fields) and alternators (usually peak load applications).

The current line incorporates two basic units:

Type 1 (single shaft); and S1 (split shaft)- 3.95 MW
Type 7 (single shaft); and S7 (split shaft)- 10.58 MW

Of the 100 Type 1 units sold, about 82 are in operation, 29 in industrial power generation with 130,000 operating hours. Since

1970, when Type 7 units were initially sold, some 46 units have been sold but only about 12 have been installed and have accumulated 130,000 operating hours. All have been split-shaft for mechanical drive applications in Middle East oil companies. Two units on order are for alternator drives.

At these lower power levels most of the applications are pump and compressor drives in the oil and gas industry. Some market penetration has been achieved in Europe, Nigeria and Venezuela as well as the Middle East.

Emphasis has been on long life and reliability. Two large separately mounted combustors with low firing temperatures make these units easily adaptable to a wide variety of fuels including crude oil and other low grade fuels.

8. Fiat - Mare, Torino, Italy

Fiat is a licensee of Westinghouse, so some of the numbers of units sold or in service overlap those included in the Westinghouse comments (II-A-3 above). But the licensed versions vary somewhat from the basic units and have different designations. For example the TG20, 26-35 MW corresponds roughly to the W251 and the TG50 corresponds roughly to the W501, 70-97 MW. Both are 3000 RPM, 50 Hz versions.

Fiat reports a total of 207 gas turbines in operation and on order (about 6,000,000 HP and 3,700,000 accumulated operating hours). The following units are for power generation; corresponding power ranges are noted:

45 units - 5-10 MW - simple cycle
87 units - 15-20 MW - simple cycle
49 units - 25-40 MW - simple cycle
5 units - 75-100 MW - simple cycle
7 units - 30-40 MW - combined cycle.

Most of Fiat's sales have been single units for power generation; a few use waste heat recovery. Major sales have been in the Middle East, Turkey, Western Europe, Finland, and Argentina.

9. Hispano Suiza Division of SNECMA, Bois-Colombes, France

Hispano Suiza has been manufacturing heavy industrial gas turbines since the early 1960's. Starting from an industrialized version of the SNECMA Atar jet engine, the present line evolved into a very heavy industrial design comprising two, vertically mounted, offset combustors.

The present line of simple and recuperative engines encompasses the 3-5 MW range. An estimated 120 of these engines were built through 1974. Distributors for Canada, Venezuela, U. S. and its territories are Turbines Hispano/Ogasco, Inc. (THO). About a quarter of the units sold to date are for power generation. In addition to the French market and surrounding continental Europe,

some units have been sold in Algeria and the Middle East. Primary applications are for pipeline and oil field pumping, compression and reinjection applications. The units are somewhat large and heavy for off-shore platform applications.

10. Ruston Gas Turbines, Ltd., Lincoln, England

This firm's efforts exclude aircraft derivative engines. They produce only heavy duty, long life engines for industrial and marine applications. The Ruston line of engines encompasses 1297 KW to 3500 KW range with three different models: TA1750, TB4000 and TD4000. The TA1750 was derived from the TA1500 series in 1952.

There are now over 500 TA series engines in service, some units have run over 100,000 hours without major overhaul. Usual period between blade inspections is 25,000-30,000 hours. Some 300 of these units are for power generation. Most applications are in remote locations and off-shore rigs for the oil and gas industry for pumping, compression and power generation. However many units have also been used in "total energy" installations. The first "total energy" installation in Europe was a Ruston TA unit installed at the AGIP Refinery in Italy. It has completed over 100,000 hours of operation as of April 1975 (11).

C. Other Manufacturers

A number of other manufacturers marketing industrial gas turbines should be mentioned for the sake of completeness. However, their significance to European utility markets and requirements, is considered only of marginal importance at present for the following reasons:

- not in European geographical area.
- power level too low to have much impact.
- do not sell to power generation markets in Europe.

Manufacturers considered in one or more of these categories are:

- Orenda - Canada
- Kongsberg-Vapenfabrikk, Norway - mostly marine and oil and gas industries (Small power levels).
- AVCO Lycoming
- Detroit Diesel Allison, U.S.

Japanese manufacturers serving the industrial gas turbine markets have followed the licensing approach to quickly build their own technology and capability. Several of the major western manufacturers have licensees as noted in the above sections:

GE/Hitachi
Westinghouse/Mitsubishi
Brown Boveri/IHI
UTC/Mitsubishi
Rolls Royce/Kawasaki

It should be noted that the Japanese manufacturers have not only performed well on the licensing operations, but they are continuously adding their own improvements and bringing along machines of their own design.

They are expected to be an important factor in the Far East, Indonesia, and the developing countries. The probability of making much penetration in European utility markets is low.

Russian gas turbine activities should be noted since they are believed to be the first to put a 100 MW gas turbine into operation. Initial manufacturing and testing of the GT-100-750 machine was in 1967 by the Leningrad Metal Works (36). Earlier machines mentioned were ten GTN-9-750, 9 MW units for pipeline compressor stations and a GT25-700-1, 25 MW unit erected in 1968.

Two GT100-3 peaking units are installed in Hungary's Inota station outside of Budapest. These were reported to have met guaranteed efficiency of 28.7%. Installed cost was $134/KW (37). Reported studies indicate consideration is being given to even larger gas turbines (38). Aside from these few references, it appears that very little information has been reported about Russian utility type gas turbines. It could be expected that some of these large industrial units will be used in Eastern Europe and Communist oriented developing countries.

Of peripheral interest is an apparent major thrust in Russia toward gas turbine pipeline compression and pumping units. General Electric has recently sold 158 turbocompressor modules through AEG-Kanis (Germany) and Nuovo Pignone (Italy) for 22 Russian natural gas transmission facilities (39,40). Solar Division of International Harvester Company has sold the USSR 38 Centaur units (11).

IV Open Cycles

A. Simple Cycle

The basic simplicity of the simple, open cycle gas turbine is the cornerstone of the whole gas turbine industry. It provides:

- Very low first cost (manufacturing, packaging and site preparation).
- High power density - i.e. high power per unit of installed weight and volume.
- Rapid starting; and easy "black" start capability.
- High reliability.
- Long life.
- Relatively easy or convenient maintenance.
- Inherently gas turbines will accept a wide variety of fuels.
- Inherently clean exhaust; very low emission polution levels.
- Short delivery time.

These advantages were enough to give gas turbines a start in power generation applications. Emergency, standby and peak power requirements were readily satisfied. Good quality, low cost fuel (natural gas and light distillates), short operating periods and low first cost more than compensated for the relatively low thermal efficiency. In essence this established a point of departure for the evolutionary development of this relatively new and very promising type of powerplant.

Low thermal efficiency has always been a drawback for simple cycle gas turbines. The fundamental approaches to increasing thermal efficiency are improving basic component performance and increasing turbine inlet temperatures (See Sections VII-A and -B), as well as making cycle improvements involving various types of exhaust heat recovery (See Sections IV-B and -C below). These major approaches are important and discussed separately in the sections indicated above.

This section of the report focuses on the simple, open cycle turbine as a system and addresses the status and trends which are apparent in European utility application.

During the period of rapid load growth in the electric power industry, 1965 through 1973, many simple cycle peaking units were used for mid-range and some base load operation as a matter of necessity. Capacity was added rapidly; fuel rate was of secondary importance. (Rapid increase in the use of aircraft derivative units for pipeline applications began about 1965.) This relatively rapid increase in the population and usage of gas turbines not only verified the advantages listed above, but it also

began to establish quantitative baseline data for the basic virtues of the gas turbine in the utility and the industrial markets. It brought out weaknesses and areas needing improvement. Pressure from the users was directed toward improved reliability, longer life, lower first cost, and reduced maintenance cost. The user has become more sophisticated in his requirements. Competition within the industry and from other types of powerplants has increased. Inflation has made on-site labor cost an important factor in erecting a powerplant.

These pressures resulted in the following trends:

- Each manufacturer has emphasized modular, pre-packaged design so as much as possible of the total powerplant can be factory assembled and shipped in pieces to the site for final assembly. Provision is usually made for subsequent addition of heat recovery systems and/or additional capacity in the form of power modules, additional gas turbine packages or steam turbines.

- Attention to operating experience has resulted in modifications of current and future machines to enhance life and reliability.

- Provision has been made for more convenient and less expensive inspection and service.

- More monitoring instrumentation has been added to assist in detecting incipient failures and maintenance problems (See Section IX).

- Environmental and noise reduction requirements have added mechanical elements and cost to the powerplants. (One manufacturer said the silencing package added 10% to the package cost.)

- Additional economic incentives (lower $/KW and higher thermal efficiency) arise from building larger capacity gas turbines. This seems to be verified by the number of turbines in the 100 MW range which have recently emerged.

As a result of the energy crisis and the recession, the following, more recent trends have emerged:

- Use or operation of simple cycle gas turbine peaking units has dropped off appreciably because the efficiency is low and there is pressure not to burn gas or light distillate. Because reserve capacity is now larger than needed, it is often possible to use the lower grade fossil-fired steam plants.

- Emphasis is now on increased efficiency by almost any means. The usual approach is higher turbine inlet temperature (for new machines) and some form of exhaust heat recovery usually for a combined cycle plant, for district heating, or for process heat. Sometimes recuperators are used.

- There is much interest and some discussion of the use of lower grade fuels, but relatively little action. (See Section VIII -B and -C) on the part of the gas turbine manufacturers and utilities in Europe.

Simple cycle turbines have evolved in two parallel paths nominally identified as the heavy industrial approach stemming from early steam turbine practice, and the aircraft derivative approach stemming from aircraft turbine engines modified for the industrial environment. Both heavy duty and aircraft derivative turbines have been used for standby and emergency power generator applications. With heat recovery systems both are also used and considered for base load and mid-range applications. However, there is a continuing controversy about the relative virtues of aircraft derivative vs. heavy industrial turbines. This controversy is expected to continue with both types finding markets compatible with the different nature and characteristics of each type of unit.

Aircraft Derivative Units

In general aircraft derivative units reflect the results of large initial development and testing investments which are necessary for their original aircraft applications. The aerodynamic performance of the compressors and turbines as well as elements of blade cooling, control and combustion embody the latest design and materials technology. Initial cost for these sophisticated engines is relatively high.

Much has been learned since the early 1950's about the modifications necessary to convert an aircraft engine into a good industrial engine. This involves some de-rating; material changes and coatings as well as selected design changes.

One or more turbojet engines, modified to be industrial gas generators, are combined with an appropriate power turbine and electric generator and integrated into modular package multiples which are matched to the specific requirements of the installation. The presently available single aircraft derivative gas generator plus power turbine and electric generator are nominally rated as follows:

GE, LM2500 - 19 MW
Rolls Royce, Olympus - 15 MW
UTC, FT4 - 25 MW

These ratings are relatively small for utility requirements: hence, the use of multiple gas generators to get various higher capacities. For example the UTC, TP4-8 Twin Pac uses 8 gas generators driving four generators to achieve a 200 MW capacity.

The early FT4 and Olympus aircraft derivative units gave powerplant thermal efficiencies of about 26% at 1700 F turbine inlet temperatures (45). The LM2500, a more recent engine, provides a powerplant thermal efficiency of about 34% (9).

The GE LM5000 being derived from the CF6-50 engine will soon be available at about 45 MW. Curtiss Wright claims that a 75 MW plant with two LM5000's will have a thermal efficiency of 36% (9,44). The Rolls Royce RB211 will also be available soon in industrialized form at about 25 MW. Rolls claims an efficiency of 33.6% for this engine. The aircraft derivative approach offers high power density in compact, light weight packages with high thermal efficiency. Gas generators can be readily

changed out for overhaul or repair. These characteristics make aircraft derivative packages well suited for application in remote areas, developing countries and off-shore platforms.

A drawback of the aircraft derivative system is that these high performance, light weight machines were developed to operate on clean light distillate fuels such as JP-4 and kerosine. The present questions surrounding the availability of good quality fuel and the future need to burn coal derived fuels lead to some uncertainty about where and how this will affect the use of these engines.

The UTC/Stal Laval FT50/GT200 engine is perhaps unique in that it represents an overt effort to combine the latest appropriate aircraft technology with heavy duty industrial design and experience to create a truly advanced high performance industrial engine in the 100 MW range. Initial prototype tests gave a thermal efficiency of 32.5% at 2035 F turbine inlet temperature (41). Minor adjustments and refinements have been identified to bring the production engine to its design base load ISO rating of 104 MW at 2150 F TIT with a corresponding thermal efficiency of 35.7%. With orders for 50 units UTC had expected to sell this plant at $93/KW.

Although UTC has temporarily shelved further effort on this engine, due to American market conditions, Stal Laval continues with development of their version, the GT200, for the 50 HZ market in Europe. It's initial efficiency is expected to be about 34%.

Heavy Duty Industrial Units

Utilities in Europe seem to favor the heavy industrial units for the normal power station requirements where space and weight are less critical factors. A notable exception is Central Electricity Generating Board in England. Most of its gas turbine capacity is the aircraft derivative type.

In general the heavy industrial units are larger, heavier, and of more conservative design than the aircraft derivative machine. Heavy industrial units have generally been available with higher capacities and appear to offer longer life and higher reliability; however, this is often a point of discussion between opposing advocates; exceptions to the generality are often quoted.

Advancements in technology show up first in the aircraft units and are then adopted in industrial units as more operating experience is gained. Examples are the adoption of higher turbine inlet temperatures and associated blade cooling, and variable compressor geometry. This slower acceptance of technology advancements and improvements is partially explained by the following:

- With the inherently long life and extended time between overhauls associated with utility and industrial applications, it takes a long time to prove the suitability of advanced design features and components.

- Typically, although much component testing is done, the large utility-type machines are not load tested at the factory. Hence, much debugging and corrections are made after the unit is installed on-site and put into service. This adds to the caution and hesitancy about quickly adopting new technology until considerable operating experience is accumulated.

It appears that the factory load testing philosophy is changing. For examply, Kraftwerk Union has installed a water-brake dynamometer capable of loading a machine up to 120 MW. This permits much more thorough test and evaluation of a machine before it leaves the factory.

The opinion was expressed that American manufacturers tended to adopt new technology (such as higher turbine inlet temperatures) and up-rate machines too rapidly before adequate demonstration of life and reliability.

Typical thermal efficiencies for the heavy industrial, simple cycle machines range from 29-31% in the 65-100 MW range; 19-26% in the 4 to 10 MW range. Thermal efficiency of older plants fall in the 18-23% range.

The industrial units have larger, less highly loaded combustion chambers with provision for changes in injection and atomization systems to tolerate a much wider range of liquid and gaseous fuels. Heat release rates on some units are as low as one eighth those of most jet engines (6).

Packaging for industrial turbines particularly for utilities in Europe, tends to be larger, factory type with overhead cranes, noise treatment, etc., as compared to skin type enclosures often used in the U. S. It facilitates maintenance.

B. Recuperative Cycles

Although the manufacturers of aircraft derivative units offer packages with exhaust heat recovery modules, none of them offer integrated recuperators where exhaust heat is transferred back to the compressor discharge air before it enters the combustion system. In general the aircraft derivative engines are so compact and integrated in their basic design that incorporation of a recuperator would constitute major changes in the basic design of the engine. Such an engine would therefore become a new engine and no longer a derivative of the original aircraft engine. Most of the benefit from previous test and development would be lost.

This is not the case with heavy industrial gas turbines. Almost all of the heavy industrial gas turbine manufacturers offer recuperative versions of their line of gas turbines. Many have been sold. For example Solar has a retrofit regenerator which can be adapted to their Centaur unit. A nominal 20% or more increase in thermal efficiency can be anticipated with the addition of a recuperator. The increment in capital cost is about $25/KW in 1974 (6).

With the current emphasis on fuel economy and conservation greater demand for these might be expected. The demand for higher thermal efficiency and fuel conservation is definite, but it seems to focus more on the combined cycle heat recovery rather than recuperators. To be sure in remote areas and places where water is scarce, recuperative machines are often used, but the preference appears to be for combined cycles. Some of the reasons for this are:

- Experience with regenerators in industrial applications has revealed problems with cracking, leaking and other structural failures as a result of the thermal stress cycles associated with numerous stops and starts as well as changes in load (42,43). Flow induced vibrations of tubes or heat transfer surfaces have been a problem from time to time.

- Regenerative cycles result in some loss in power capability with 20% or more improvement in thermal efficiency whereas a combined cycle gives increased efficiency and increased power.

- European utility operating people feel that gas turbines and extra heat exchangers are more complex and less reliable than steam plants. It is believed this is because they are familiar with steam plant operation and apprehensive about relatively new gas turbine system operation. Hence operators prefer the addition of steam components to gas turbine components.

As a consequence of these factors it appears that regenerative units are being used only when special siting problems, like lack of cooling water, space or weight constraints and other requirements occur which give special incentives for using regenerative gas turbine plants instead of combined cycles.

C. Combined Cycles

Following the oil embargo and as a result of the continuing attention to the energy crisis, emphasis has been on increasing over-all thermal efficiency and ability to burn a wide range of fuels. As a result European manufacturers indicate that almost all inquiries or requests for quotation involve some form of exhaust heat recovery. In industrialized nations for utility applications, where available cooling water is not a limitation, combined cycle plants now seem to predominate even for peaking applications. Most manufacturers offer combined cycle options or variations as packaged modules along with their basic line of gas turbines. A recent market analysis (12) showed 56 combined cycle plants installed or on order in the U. S. with a total of 8,003 MW gas turbine capacity; and 57 such plants are outside the U. S. with 3,520 MW of gas turbine capacity.

It should be mentioned that the combined cycle concept is not new and considerable operational experience has already been accumulated (46,51). Some 115 supercharged (Velox) boilers, a type of combined cycle, were installed between 1930 and 1965. The more traditional gas turbine exhaust heat recovery boiler

installations began to appear in 1961. Figure 14 (46) shows both basic types. The supercharged boiler approach, although it offers reduction in space, weight and cost (about 20% for steam generator) for a given capacity, seems to be used more for special applications because of its drawbacks: a radically new and different boiler design is required; operation without the gas turbine is not possible (less flexibility); and there is more restriction in the type of fuels which can be used.

The principal advantages sited for combined cycle plants as compared to conventional steam plants include the following (48):

- Lowest installed cost, a result of lower cost per KW for gas turbines, and shorter time to erect a combined cycle plant due largely to pre-engineering and factory packaging of major and auxiliary components in a modular manner.
- Good part-load performance, with added output at low ambient temperatures.
- Potential for excellent plant availability (90%). The requirement for reserves is also reduced because small generating modules form a combined cycle plant.
- Good environmental characteristics, with less thermal discharge.

Many utilities are planning and installing simple cycle gas turbine units which will later be converted to combined cycle operation with addition of heat recovery steam generators, steam turbine generators, and condensers. This two-phase approach for combined cycles provides short-cycle installation times for peaking power plus the future capability for very efficient operation for mid-range and base load generation. It permits flexibility in system generation planning and reverses the historical concepts of moving up older less efficient generation on the load-duration curve. Sizeable savings in capital and operating cost are major advantages of the concept (49).

In many plants of the world, there are old fossil-fired plants which, by today's environmental standards, are not acceptable. These can be renovated by replacing the old boiler with a gas turbine and heat recovery steam generator. Exhaust emissions are reduced and thermal efficiency and generating capacity are increased (18,21,49,50).

A tabulation of 23 European combined cycle power stations (21 have already been commissioned) is shown in Fig. 15 (47). The various types of plant noted include fired and unfired exhaust heat recovery boilers, steam systems with and without reheat and with high pressure steam conditions and high regenerative feed heating. The Hohe Wand plant uses a regenerative air preheater (recuperator) in the gas turbine cycle. The Kellerman-Lunen plant, commissioned in 1972 uses a coal gasification plant and a pressurized-furnace steam generator in lieu of a conventional gas turbine combustion system. (See Section VIII-C).

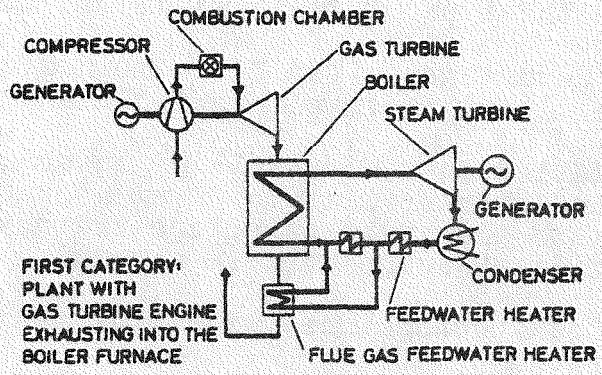

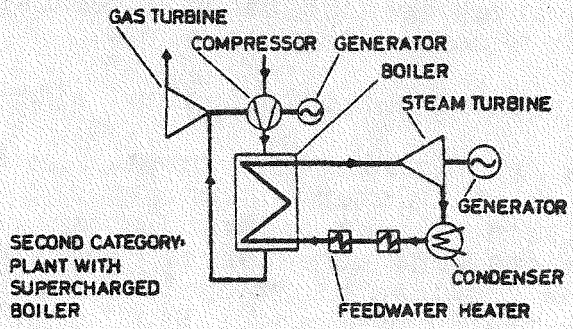

Fig. 14 Categories of Steam and Gas Turbine Plants

Plant	User and Location (1)	Type	Fuel (2)		Output	Overall Efficiency LCV %	Output to intake air ratio kW/kg	Gas Turbine		In Service
			GT	Steam Generator	MW			Type(3)	Rating MW	
Kornneuburg	NEWAG/ Verbund-gesellschaft (A)	A/A_3	NG	NG	75	32.6	441	2x B-12/8	2x25	1960
Hohe Wand	NEWAG/ Niogas (A)	D	NG	C H NG	75	43.7	938	K-VM 51	10.3	1965
Neuchâtel	Neuchâtel (CH)	A/A_1	H	–	26.2	28.9	–	S-N 110 11	19.1	1967
Liège	Socolie (B)	A/A_3	NG	NG	46.3 (34.2)	29.7 (32)	–	S-N 110 11	23.1	1968
Vitry I	EdF (F)	C	NG	NG/CG	322	39.6	1006	B-13 S	42.0	1970
Vitry II		C	NG	NG/CG	322			B-13 S	42.0	
Altbach A Block IV	Neckar-werke (D)	A/A_2	NG/D	NG/H	251	39.9	738	K-V 93	51.0	1971
Kellermann, Lünen	STEAG (D)	E	–	CG	170	36.9	500	K-V 9	74.0	1972
Emden	NWK (D)	C	NG	NG	452	45.5	1329	K-V 93	52.1	1973
Gersteinwerk F	VEW (D)	B	NG	NG/H	417	43.6	1226	K-V 93	52.1	1973
" " G		B	NG	NG/H	417	43.6	1226	K-V 93	52.1	1973
" " H		B	NG	NG/H	417	43.6	1226	K-V 93	52.1	1973
" " J		B	NG	NG/H	417	43.6	1226	K-V 93	52.1	1973
Robert, Frank, Block IV	PREAG (D)	C/C_1	NG	NG	510	–	1417	B-13 C	55.7	1974
Marbach III	EVS (D).	A/A_2	NG	NG	320	–	889	B-13B	55.4	1974
Emsland B	VEW (D)	B	NG/D	NG/D	417	43.5	1226	K-V 93	51.9	1974
Veltheim, Block IV	GWK (D)		NG/D		374	–	1039	B-13 C	58.7	1974
HKW 3 Duisburg	StwD (D)	C	NG/D	NG/H	172	44.3	860	K-V 82	31.5	1974
Mainzwerk II	KMW AG (D)	C	D	H	338	–	939	B-13 C	67.7	1975
Emsland C	VEW (D)	B	NG/D	NG/D	417	43.5	1226	K-V 93	51.9	1975
Gebersdorf	GFA (D)	C	NG/D	NG/D	403	43.2	1185	K-V 93	51.0	1975
Donge	PNEM (NL)	A/A_1	NG	–	118	44.4	328	B-13 D	75.5	1976
Theiss B	NEWAG (A)	A/A_2	NG	NG/H	310	–	885	SL-GT 120	60.0	1978

(1) NEWAG, Niederosterreicher Elektrizitätswerke AG; Neuchatel, Electricite Neuchateloise SA; EdF, Electricite de France; STEAG, Steinkholen Elektrizitäts AG; NWK, Nordwestdeutsche Kraftwerk AG; PREAG, Preussische Elektrizitäts AG; VEW, Vereinigte Elektrizitätswerke; GWK, Gemeinschafts Kraftwerk Weser GmbH; StwD, Stadtwerke Duisburg; KMWAG, Kraftwerke Mainz Wiesbaden AG; GFA, Grosskraftwerk Franken AG; PNEM, Noordbrabantsche Electriciteits Maatschappij. EVS, Energieversorgung Schwaben. (2) NG, natural gas; D, distilate oil; H, heavy oil; CG, coal gas. (3) KWU, Kraftwerk Union; B. Brown Boveri; S, Sulzer; SL, Stal Laval

Fig. 15 European Combined Cycle Plants in Operation and Under Construction

With the larger power ratings of single gas turbines, it is now possible to extend the over-all plant ratings considerably with various combined cycle options. For example the KWU 81 MW gas turbine with a flow rate of 1730 tons/hour can provide increased ratings: to 150 MW with an exhaust heat recovery boiler and ateam turbine without supplementary firing; to 480 MW with supplementary firing; and to 600 or 700 MW with steam reheating and regenerative feedwater heating (47).

Depending on the specifics of the application and details of the turbomachinery system design thermal efficiencies for combined cycles when producing only electricity range between 32% and 44%. Frequently efficiencies in the 45% range are achieved with present components. The higher turbine inlet temperatures associated with the next generation gas turbines should provide overall efficiencies in the 47 to 50% range (49).

With some increase in complexity it is possible to increase the overall efficiency of combined cycle by one or two percentage points by using two different steam generating pressures (dual pressure) in the exhaust heat recovery boiler (52). This makes it possible to recover a larger portion of the heat in the gas turbine exhaust. This is a key feature in KWU GUD System (trade name for KWU combined cycle plants; like PACE for Westinghouse and STAG for GE).

Maximum use of the thermal energy contained in fuel is achieved when requirements for both electric power and heat can be satisfied simultaneously. Usually such requirements come from industrial or process plants or from cities or towns for district heating purposes. In such a situation over 80% of the heat content of the fuel can be fruitfully utilized. An example of such a plant is the combined cycle plant at Saarbrucken, Germany (53,54). Figures 16 and 17 (53) show a schematic of the plant and a tabulation of the performance characteristics of the "VEGA" (Vapeur et Gaz) plant. This plant has been operating on light distillate fuel (natural gas will not be available until 1978) since September 1974. Since the gas turbine now supplies both heat and electricity at an over all efficiency of 80%, (28.1 MW + 36.7 G cal/hr) this might be considered the best way to use this natural resource. When producing electricity only the combined cycle efficiency is 39.03% (28.1 MW); the efficiency of the gas turbine alone (without heat recovery) is 27% (23.5 MW). The total installed cost was about $200/KW, about the same as large condensing plants with overall thermal efficiencies of about 40%.

This plant is the first of its kind in Europe to operate on combined district heating and power generation. (Three others are planned.) It is of interest that EEC has approved the use of natural gas for this type of plant.

Use of exhaust heat from gas turbine power plants for district heating seems to be a definite trend in Europe, however, the gas turbine still places some constraints on the quality of fuel presented to it. Fuel quality outside the normal tolerance range of the engine can reduce its life and increase maintenance cost.

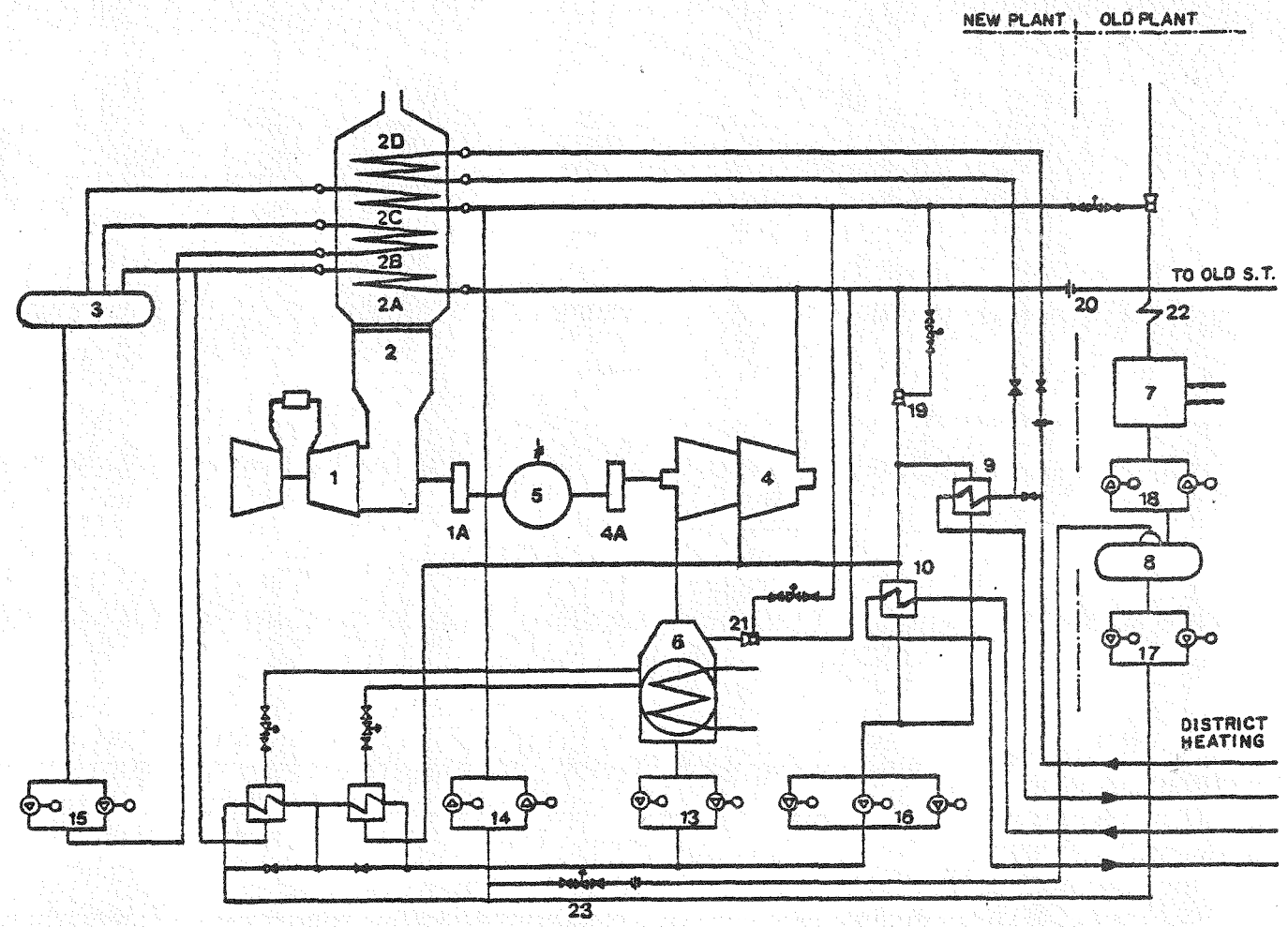

1	Gas turbine	4A	Gear and clutch	14	Make up pumps
1A	Gear and clutch	5	Generator	15	HRSG circulating pumps
2	HRSG duct and burners	6	Condenser	16	Heat exchanger condensate pumps
2A	Superheater	7	Old plant boiler	17	Feed water pump newplant
2B	Vaporizer	8	Old plant feedwater tank and dearator	18	" " " oldplant
2C	Economizer	9	District heating heat exchanger	19	Desuperheater
2D	Exhaust gas cooler	10	" " " "	21	"
3	Boiler drum	13	Extraction pumps	23	Feedwater control valve
4	Steam turbine				

Fig. 16 Installation Flow Diagram

CHARACTERISTIC		HRSG			
		UNFIRED		FIRED	
Gas Turbine drive output	MW	23.5		23.5	
Gas Turbine heat rate (LHV)	Kcal/kWh	3,209		3,209	
Supplementary burner consumption	Gcal/h			30.3	
Gas Turbine exhaust temperature	C	485		485	
HRSG steam production	t/h	47		85	
HRSG discharge steam temperature	C	430		510	
Expanded steam to condenser	t/h	47	1	60	25
Extraction	t/h	0	46	25	60
Extraction steam heat	Gcal/h	-	31.37	16.37	41.47
Steam Turbine drive Output	MW	9.25	4.6	20.05	13.8
VEGA power output	MW	32.75	28.1	43.55	37.3
VEGA heat output	Gcal/h	5.00	36.37	19.87	44.97
Total efficiency	%	44.0	80.4	54.3	73.9

Fig. 17 Performance Characteristics of Vega Plant

Sensitivity to variations in fuel seems to increase with operating temperature and pressure ratio, the high performance aircraft derivative units in general are the most particular and the heavy industrial units, particularly the European types with very large single or dual burners, the least sensitive.

Also, with the open cycle machines the electric power and the exhaust heat available are functionally related and not readily adaptable to independent control according to independent heat and electrical power demand.

Possible solution to these two problem areas may be with closed cycle gas turbine systems (See Section V).

Some idea of typical comparative costs and thermal efficiencies can be obtained from input data used for the detailed economic studies described in (5):

	1976 Plant Cost $/KW	Thermal Efficiency Per Cent
Nuclear	708	34.5
Coal-fired steam (no reheat stripped down for peaking.)	500	37.5
Oil-fired steam (no reheat stripped down for peaking.)	329	33.4
Combined Cycle	260	42.7
Simple Cycle Gas Turbine	120	30.0

(Cost figures should be considered only as rough indications since they are dependent on so many factors related to the individual installation requirements, locality.) Some lead times given for procurement and installation (2) are as follows:

Peaking plants	12 - 24	months
Combined cycle plants	36	months
Fossil plants	72	months
Nuclear	96	months

Figure 18 (2) shows another estimate of approximate capital cost and operating costs for various types generating plants based on 1977 commercial operation. It does not include start-up, shutdown or standby costs. From a purely economic standpoint simple cycle combustion turbines can be justified up to 1500 hours/year of operation and combined cycle up to 4200 hours/year. In the interest of energy conservation, the amount of fuel consumed can be optimized by restricting simple cycle machines to peaking and system reserve operation and adding heat recovery equipment or some type of combined cycle plant for intermediate duty.

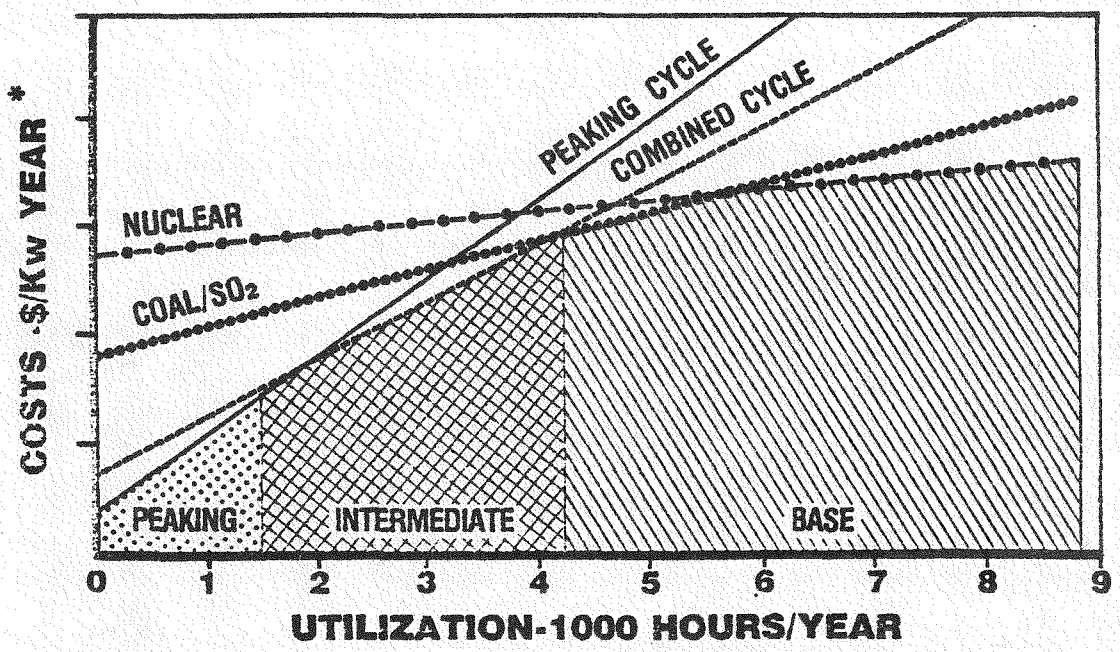

BASED ON 1977 COMMERICAL OPERATION

POWER PLANT TYPE	Capital Cost ($/Kw)	Fuel Cost ($/MMBTU)	Heat Rate (BTU/Kw hr) HHV	Operation & Maint. Cost (Mills/Kw hr)
Nuclear	750	0.25	10,000	1.10
Coal with SO_2 Removal	530	0.80	9,300	3.10
Combined Cycle	200	2.50	8,200	1.60
Peaking Cycle (Combustion Turbines)	140	2.50	11,600	2.40

Figure 18

*Quantitative values not published.

D. Special Cycles

Two additional types of open cycle plant should be mentioned because of their potential impact on conservation:

- Air Storage Cycles
- Refrigerated Gas Turbine (RGT) Cycles.

Air Storage Cycles are intended to satisfy peak power requirements. Operation is as follows: A motor-driven compressor takes power from the electricity network at night, or during low demand periods, compresses atmospheric air to a high pressure and puts it into a storage container or underground reservoir. At times of peak demand air is taken from the container, heated in a combustor by burning fuel and then expanded through a turbine to atmospheric pressure. The turbine drives a generator which feeds power back into the electrical network. The effect of heating the air in the combustor is that from 20 to 40% of the original compressing power is regained. A schematic diagram of such a system is shown Fig. 19 (55) and a section through the expansion turbine is shown in Fig. 20 (55). Air storage plants appear suitable for coping rapidly with peak demands and are feasible mainly in locations where, for topographical reasons, hydraulic stations cannot be built. There is movement to build standardized storage turbines from existing standard steam and gas turbine components. This provides equipment based on broad experience with a high level of reliability and with shortened delivery times. The world's first air storage gas turbine power station, 290 MW capacity, is scheduled to go into service at Huntorf, near Bremen, Germany in mid-1977 (34,35).

Incidentally this trend has given incentives for the development and application of high capacity, high speed clutch-couplings, used on either side of the motor/generator (Fig. 19).

Refrigerated Gas Turbine Cycles have only received sporadic attention (56), but numerous unpublished studies have shown that net increases in power of the order of 50% and in efficiency of the order of 40% can be gained by refrigerating the compressor inlet air. The beneficial effects of low ambient temperatures on gas turbine power and efficiency are well recognized. These are due to reduced compressor work requirements. By extending this approach to very low temperatures (-80 to -100 F) the benefits of increased power and efficiency can be amplified further.

Although knowledgable industrial refrigeration people say the added equipment cost and complexity for refrigeration and dehumidification of the inlet air do not outweigh the advantages, this aspect of the RGT system needs more consideration. Also the effect of very low inlet temperature on the compressor design and operation must be considered. If existing hardware can be used with little or only minor modification, then this cycle might have some impact on near-term conservation efforts.

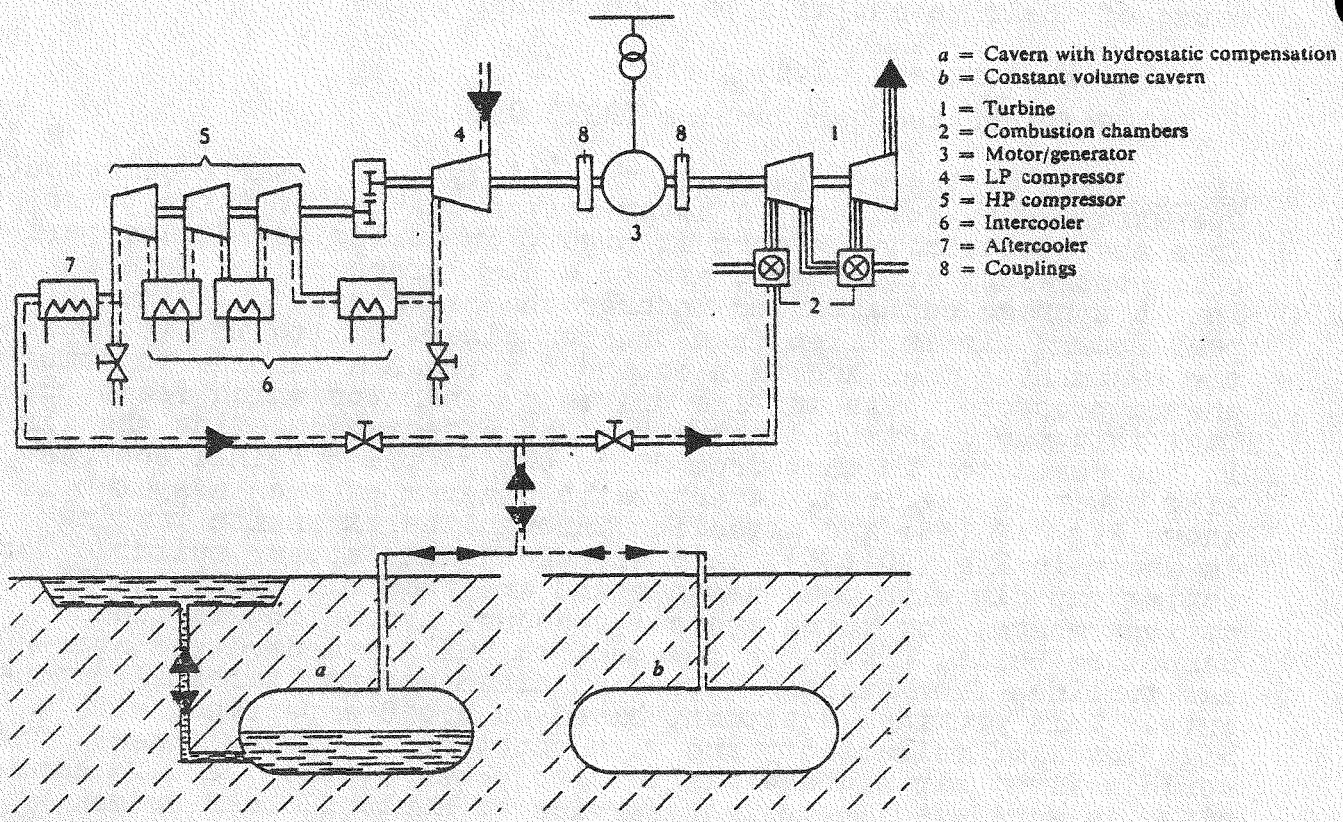

Fig. 19 General Arrangement of Air Storage Power Generating Systems

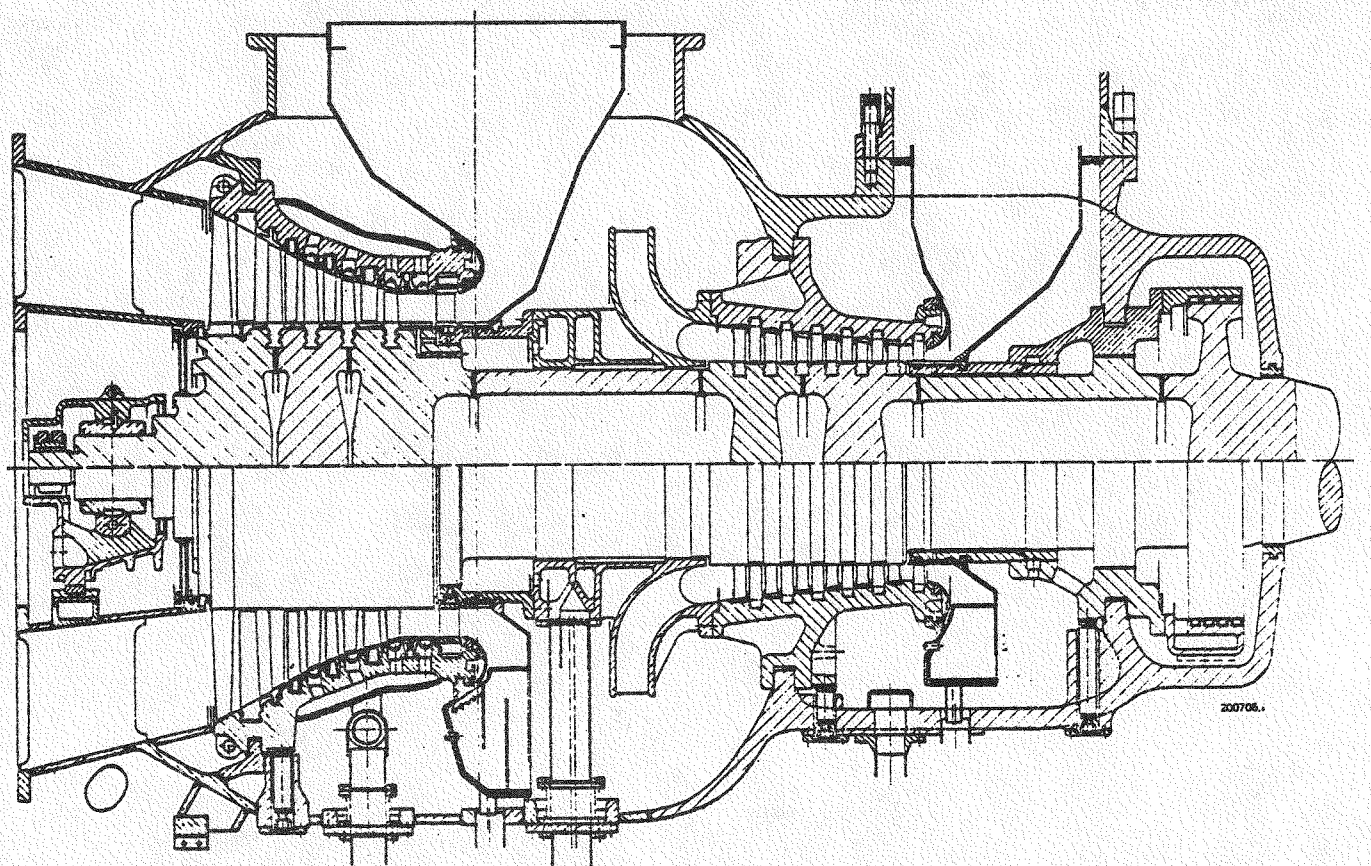

Fig. 20 Section Through Air Storage Turbine (HP Cylinder Based on I.P. Steam Turbine Principles - LP Cylinder Based on Well-Proved Gas Turbine Principles)

With the anticipated large use of LNG (liquified natural gas) and the use of cryogenic temperatures for super-conductors there could be further opportunities to fruitfully exploit the RGT cycle.

V Closed Cycles

A. Overview

Development of closed cycle gas turbine systems started in 1939 and was initially reported in 1941 (57). Since then some fourteen plants have been built in Europe, Great Britain, Russia and Japan and numerous papers have been written. Many of these plants have now operated for over 100,000 hours; they have demonstrated economic viability; and made money for the operators.

Regardless of this success, utilities have been reluctant to purchase and install closed cycle stations on a broad basis. Yet it has always seemed that closed cycle systems have been on the verge of this broad acceptance. Some of the reluctance is related to the unfamiliarity of the utilities with a seemingly new non-steam system. Other objections seem to stem from intuitive feelings superficial analysis of the cost and complexity of the heat exchangers. Because the heat transfer is from gaseous combustion products to the gaseous working fluid in the cycle (Air-to-Air) instead of gas-to-water and -steam, the heat transfer coefficient is lower and more surface is needed. Such factors, without strong additional incentives or special requirements, have retarded more rapid acceptance and application of closed cycle gas turbine systems.

Perhaps the most significant reason for slow acceptance is that the best way to exploit the full capabilities of closed cycle systems is to use them in applications where both heat and power are required. The power industry is structured so that most utilities sell only electricity; other companies or organizations sell heat (steam or hot water - and more recently cold water for air conditioning). People selling gas and oil for heating tend to compete. As a result there has been much reluctance (mild expression) to work cooperatively to provide integrated "heat-power" systems, or if air conditioning is also a consequence of exhaust heat utilization - "total energy systems". Observations of the market trends in Europe indicate that more integrated approaches are now being developed. Numerous heat-power systems have been installed; more are under consideration particularly those using closed cycle gas turbine systems.

Perhaps the situation is changing. Based on the good technical and financial experience to date and the current trends in market requirements (energy conservation, alternative low grade fuels, need for heat as well as electric energy for industrial processes and district heating, potential advantages of direct cooled helium nuclear reactor with a closed cycle helium gas turbine), timing may now be right for wider use of closed cycle gas turbines.

B. Closed Cycle Operating Experience

All known closed cycle gas turbine plants are identified in Fig. 21 along with some pertinent design information and the operational status (running time) where known (1,58 -64). Many more

Units	Manufacturer	Application	Continuous Output	Heat Supply	Plant Efficiency	Commissioning Date	Running Time	Fuel	Turbine Inlet Temp.	Comp. Inlet Pressure	Remarks
	-	-	MWe	MW	%	-	Hours	-	°C	Bars	-
Escher-Wyss Zurich, Switzerland	Escher-Wyss	Power	2	-	32.6	1940	6000	Oil	700	-	First Test Plant Retired
Ravensburg, Germany	E-W + GHH	Power & Heat	2.3	2.3-4.1	25	1956	120,000 to 6-76	Coal or Oil	660	7.2	
Coburg, Germany	GHH	Power & Heat	6.6	8-16	28	1961	100,000 to 6-75	Coal	680	7.3	
Oberhausen I Germany	GHH	Power & Heat	13.75	18.5-28	29.5	1960	100,000 to 6-76	Coal/Coke Oven Gas	710	8	
Oberhausen II Germany	GHH + EVO	Power & Heat	50	53	31.3	1975	3,000 to 5-76	Coke Oven Gas	750	10.5	First Use of Helium as Working Fluid in Elect. Power Plant.
Haus Aden, Germany	GHH	Power & Heat Comp. Drive	6.4	7.8	29.5	1963	100,000 to 6-75	Mine Gas+Coal	680	9.3	
Gelsenkirchen Germany	GHH	Power & Heat	17.25	20-29	30	1967	75,000 to 6-76	Bl.Furn.Gas & Oil	711	10.2	
St. Denis Paris, France	-	Power	12.5	-	-	1951	5,000 since'56	Oil	660	-	First Big Plant/ Double Pressurized Heater
Toyotomi, Japan	Fuji Elect. & E-W	Power	2.0	-	26	1957	90,000	Nat. Gas	660	7.2	
Nippon Kokan Japan	Fuji Elect.	Power	12	-	29	1961	85,000 to 12-70	Bl.Furn.Gas	680	6.7	
Rothes Great Britain	-	Power	2.0	-	-	1960	~1,000	Coal Slurry	660	-	Stopped Due to Mine Closure
Altnabreak Great Britain	-	Power	2.2	-	-	1959	~1,000	Peat	660	-	Stopped Due to Mine Closure
Kashira Russia	E-W	Power & Heat	12	9-12	28	1961	-	Brown Coal	680	7	Achieved Guarantees
Spittelau Austria	BBC/E-W	Power & Heat	30-22	29-58	31-24	1972	-	Oil or Gas	720	-	Achieved Guarantees Dismantled
Die Oxygene Phoenix	E-W & LaFleur	Cryogenic Gas Production	2	-	-	1966	5,000	Nat. Gas	680	-	Helium Fluid; Dismantled
Adv. Power Conv. Exp. Test Facilities Ft. Belvoir, VA	Corps of Engineers (Stratos Et Al)	Army Power Requirements	0.5 0.5	-	18.6	1959	-	Oil	650	8.1	Experimental (Fluid, N_2)
Adv. Power Conv. Skid Experiment San Ramon, Calif.	Corps of Engineers (Stratos Et Al)	Army Power Requirements	0.500	-	16.7	1964	-	Oil	650	8.1	Experimental (Fluid, N_2)

Fig. 21 All Previously Installed Closed Cycle Industrial/Utility Powerplants

details of cycle temperatures, pressures, flow rates, etc. are shown in these references. It is perhaps more fruitful here to step back and try to get a better perspective of the overall trends based on the experience with these plants.

Experience gained with these 17 plants over the period from 1940 to date (36 years) covers a wide range of sizes, applications, fuels, and circumstances. Most important, many of these plants now have over 100,000 hours of operation; much of this operation has been with various types of pulverized coal, coke oven gas and heavy oil. Consequently, many of the early problems have been identified and resolved (60,62,65,66). All of the industrial plants met or exceeded performance guarantees. As it turns out this long operating experience is directly applicable to the requirements and trends emerging from the energy crisis and concern for the environment as mentioned above.

Other observations can be made about these closed cycle plants:

- Early plants had relatively small capacity, more recent plants are in the 30-50 MW range (still small relative to normal utility requirements).
- Turbine inlet temperatures are relatively modest; more recent plants have somewhat higher inlet temperatures.
- Most of the plants are relatively simple with only one intercooler and no reheat or a multiplicity of feedwater heaters and auxiliaries as in steam plants.
- Regardless of the size and modest turbine inlet temperatures, the plant efficiencies are in the high twenty's and low thirty's.
- All plants use air as a working fluid except for the Oberhausen II plant which uses helium.
- Most of these plants were justified on the basis of special fuels and requirements.

A few comments about selected individual plants are appropriate:

1. Escher-Wyss, Zurich: This was the first experimental plant; it was built just prior to World War II. Initial test and development was carried on during the War from 1939 through December 1944 when the official acceptance tests were run. Double walls for machines and high temperature insulation was introduced here to minimize the need for expensive and scarce heat resistant materials.

2. Ravensburg, Germany: This is the first real industrial plant with a pulverized coal fired air heater. It went into operation in 1956. It can be regarded as the starting point for the practical use of closed cycle machines after about 20 years of laboratory and test development by Escher-Wyss and their licensees.

This plant has operated over 110,000 hours with only minor problems and reqairs. These are summarized in (60). It was demonstrated that the combustion system and heater could be changed in only one or two days to operate on coal, oil, or gas. Heavy bunker oil was used with additives to prevent corrosion. The dolomite additive causes some dust deposit on the heater tubes which has to be blown off. With this capability advantage could be taken of the lowest price fuel available.

Waste heat from the plant is used entirely for the near-by Escher Wyss manufacturing plant. One megawatt of heat can be sold for 29.8 D.M. - approximately the same as 1 MW of electric power. Thus, even though this plant is quite small (2.3 MW), it is very economical. Comparing with the grid prices of the nearby utilities, Ravensburg makes a profit of about half a million D.M. per year. Of course the capital cost was paid-off long ago.

To date the plant has been shut down and started about 1200 times. Availability is now over 87%.

3. Spittelau Plant, Vienna, Austria: This plant represented the latest, most modern design of a combined heat-power plant of the closed cycle type using air as a working fluid. It was designed to supply electric power and district heating to Vienna. The system provided 300 F water to heat private homes and offices. With the waste heat recovery the total energy usage, or efficiency was 85%.

The total efficiency was 31% without heat recovery. The plant was built and tested. All guarantees were ultimately satisfied. Initial start-up problems involved: blade vibrations in the LP turbine, tube vibrations in the pre-cooler and some sealing/material adjustments which were resolved by the manufacturer.

Unfortunately other, non-technical problems developed between the electric power organization and the organization responsible for district heating. As a result of local legal and political maneuvers, and over the objections of many key technical and engineering leaders in Europe, it was decided at the end of 1975 to dismantle the plant.

4. St. Denis Plant, Paris, France: This plant commissioned in 1951 followed the Zurich plant and might also be considered a pilot plant. It was higher powered (12.5 MW), much more complex (reheat and three intercoolers), and operated at a relatively high pressure (50 bar max). The air heater was a supercharged type; an exhaust turbine drove the combustion air compressor and a combustion gas circulator. In many respects this plant was a forerunner of future, more complex sets. However, practical operation showed that many components could be simplified for such big sets. Consequently all of the subsequent plants were built without reheat systems and supercharged air heaters (58).

5. Oberhausen I, Germany: Numerous papers have been published describing the Oberhausen I plant and its operational experience since 1960 (65,66,69).

The Oberhausen area makes coke for the steel industry. Low BTU coke oven gas is a by-product which is bought by the local utility from the mining company. It is clean and dry with no sulphur or particulates. Local SO_2 requirements permit 0.14 mg/m^3 max. This is the limiting factor for most local industry but because of the above fuel supply, the Oberhausen closed cycle plants (I and II) are not concerned about it.

It is noteworthy that this plant represents a milestone in that it was the first time a major utility (RWE) agreed to collaborate with a district heating organization (EVO) on a combined heat-power system. RWE is Germany's largest utility. It has a total system capacity of about 20,000 MW which includes one 50 MW open cycle gas turbine about 5000 MW of lignite burning plants, about 3000 MW nuclear plants, and the balance (12,000 MW) coal and oil fired plants.

Because of the good results with this system, a number of similar projects are under consideration including the St. Gallen plant in Switzerland now in the planning stages.

6. Oberhausen II Plant, Germany: The first heating power station employing a helium-turbine was built by Energieversorgung Oberhausen AG (EVO) from 1972 to 1974. Several reports have been issued in which the design, construction and erection of the prototype power plant have been explicitly described (61, 62,66,74,75).

This plant is of particular significance, since it is not only intended to serve the power and heating needs of Oberhausen, but it also represents a small scale pilot plant for future, large scale nuclear stations. In fact the size of the machinery is about the same as that for a much larger rating (about 30 MW) as part of a nuclear system. In view of this importance, extra emphasis is placed on the initial operating experience with this plant.

This fossil-fired plant with a net electrical output at terminals of 50 MWe and a heat rating of 53 MW for district heating is a part of the 4th Atomic Energy Program of the Federal Republic of Germany. An essential part of the project is the "High Temperature Reactor with a Helium Turbine of Large Output" (HHT). Experience with the Oberhausen II plant will contribute to the design and construction and operation of large helium turbine power plants.

Assembly of the Oberhausen helium-turbine plant was concluded in the autumn of 1974. Subsequently, start-up operations on

auxiliary systems were initiated, the motor operated valves, measuring devices, and the control circuits were checked and the signal set points were adjusted.

Simultaneously, the main helium circuit was checked for leak-tightness. First the entire system was pressurized with compressed, dry air to a pressure of 10 bars and the leaks discovered were eliminated. The gaskets on flange connections employed for the first test run did not give satisfactory leak-tightness. This required seal welding of all flang connections in the piping system. Turbine and compressor joints were leak-tight in the cold condition so that the seal weld lips installed were not seal-welded.

After a vacuum test which showed satisfactory results, a helium pressure test was carried out. The whole system was pressurized to slightly above atomspheric pressure with helium. The systems were scanned with a helium leak detector. Some minor leakages, especially on tubing connections (to measuring devices) and in some instances on valves were discovered and eliminated. After a high degree of leak-tightness was established, the entire piping system was insulated. The pressure in the entire circuit was then increased to an equalizing pressure of 17 bars. Lubrication and seal gas systems as well as the helium purification systems could now be tested. Tests showed that these systems were functioning properly. By means of the helium purification system, the remaining portion of air in the main circuit was reduced within 10 hours to 1 ppm for each part of impurity content. Parallel to these operations on the turbine, the satrt-up requirements of the helium heater were pursued. The brickwork had to be dryed for several weeks.

Incidentally, the working inventory of helium for the Oberhausen II plant is 1000 kg.

Then, the turbo-set was rotated by the starting gear; the circuit temperature was gradually increased to 520 C. The turbo-set was running for several hours at a nominal speed of 3000 rpm in preparation to synchronize the system when suddenly the temperature of the high pressure compressor casing at the location of the labyrinth seals was rising and the noise intensity increased. The plant had to be shut-down and after removal of the upper casings it was apparent that rotor shifting in the axial direction had generated friction in the labyrinth seals.

It was also determined that the pressure and discharge lines in the oil sealing system had been mistakenly interchanged permitting lubricating oil to get into the gas system.

The damaged labyrinth seals were replaced and the cause of the damage eliminated. After reassembling the turbo-set and reperforming the leakage tests, plant start-up was again initiated in the first days of November 1975. District heating was sup-

plied for the first time to the grid in Oberhausen-Sterkrade.

On November 8th, 1975 the helium turbine was synchronized with the interconnecting grid for the first time. Though the turbo-set showed satisfactory operational results for several days the plant was shut-down on November 12th due to sudden damage on one of the high pressure turbine bearings.

When the damaged bearing was repaired and assembled, EVO was able to synchronize the plant with the grid on December 23rd, 1975. Since then the helium turbine plant has been running without interruption except a short period in which a bearing was exchanged. At a maximum turbine inlet temperature of 660 C the helium inventory was increased until the electrical load at the terminal was about 15 MW. Within the period of approximately 1200 operating hours (until March 10, 1976), main interest has focused on accumulating knowledge of the operating behavior of the plant and thereby to test the various component parts of the plant at moderate loads.

Since this plant provides the opportunity to obtain valuable operating experience with the first helium turbine plant of its kind, a comprehensive test program is scheduled. Efforts to obtain data on the following subjects have already been initiated:

- Main helium circuit -

  The dynamics of the entire system and the interaction of its component parts will be examined. While steady state behavior is assigned to tests on component parts and to programs of long duration, the main concern in this case is to cover unsteady conditions such as plant start-up and shut-down as well as transient load changes and load dumping. Specifically, test topics include:

  - control behavior (inventory control, bypass-control)
  - behavior during load dumping
  - behavior of the multiple storage system (velocity of load variation)
  - behavior of feeding to the high pressure side (frequency stabilization).

- Auxiliary circuits -

  Of particular interest to HHT plants are the following auxiliary systems:

  - the gas sealing system
  - the gas cooling system
  - the oil-helium separating system.

  The dependency of these systems as a function of the main circuit and its component behavior will be determined.

The first tests are to determine:

- the differential pressures in the auxiliary systems as a function of the main circuit pressure.
- the variation of sealing gas throughput during main circuit control operations.
- the minimum differential pressures required for accurate functioning of the gas sealing systems.
- the sealing gas throughput as a function of the operating behavior of the external sealing gas blowers.

- Helium turbine -

Investigations on the helium turbine commence with the determination of rotor vibrations. With the aid of test results a mathematical model will be developed which describes the rotor vibration in steady as well as in unsteady operating conditions. Comparison of model results and possible dynamic variations during operation may render conclusions as to the cause of changing vibrations, i.e. ascertain thermally induced unbalances during operation.

- Piping -

The hot gas piping will be subjected to studies on:

- mechanical oscillations on parts of the piping,
- sound fields in the helium current,
- pressure and temperature loads on the insulation.

The first evaluation of vibration measurements on the piping system is already on hand. It pertains to measurements with strain gauges on the concentric duct with respect to vibrations:

- of the inner pipe.
- of the guide vanes for deflections of 90°.
- of the bellows.

The first vibration analyses show that the operation of the helium turbine plant is characterized by low frequency loads on the piping system.

- Conclusions to date -

The first operating periods of the helium turbine plant in Oberhausen show that this prototype plant can comply with the requirements not only for generating electricity and heat for district heating, but also for a number of essential tests and operating experience necessary for the construction of large helium turbines.

7. American Plants: Three plants in America are mentioned for the sake of completeness. The cryogenic plant of La Fleur used helium working fluid; it operated over 5000 hours (59,67,68). The net output was cryogenic liquid gas. This very specialized machine proved to be too expensive to manufacture for the limited market for cryogenic liquids. Anticipated market growth did not materialize.

The Army experimental plants were built to verify turbo-machinery systems technology, identify problems and demonstrate packaging feasibility of small, mobile nuclear powerplants suitable for the anticipated requirements of the Army (63,64). Other closed cycle hardware activities in the U. S. until recently have been directed to more special applications like space power, marine propulsion and undersea systems.

C. Characteristics - General Cycle Description and Components

1. General Cycle Description

Without utilization of the waste heat, the total heat supplied by the fuel breaks down into the following approximate heat balance (58):

Net output	32.30%
Heat extraction precooler	27.05%
Heat extraction intercooler	27.60%
Mechanical and electrical losses	1.95%
Auxiliary machines	1.10%
Air heater losses	9.50%
Unaccountable losses	0.50%
Total heat content of fuel	100.00%

Clearly any reduction in intercooler and/or precooler losses will have a significant affect on the system. It is this heat which can be used for a number of heating purposes, such as district heating or air conditioning. Also, contrary to steam turbine plants, this heat rejection occurrs at a temperature well above 100 C, so the heat can be used directly for many heating purposes.

The schematic diagram shown in Fig. 22 (58) is typical of most of the heat and power producing closed cycle systems to date. The coolers consist of two parts: the hot water part for remote heating and the fresh or cold water part. With a normal temperature of 20 C at the compressor inlet, about 1 Gcal/MW-hr can be produced with such a system with a heating water inlet of 50 C, mostly used in European district heating systems and an outlet heating water temperature of 90-110 C.

When throttling the flow of cooling water, the air inlet temperature of the compressor, and thus the heat production can be raised. This procedure only slightly influences the electric output and the efficiency of the cycle. It is even possible to

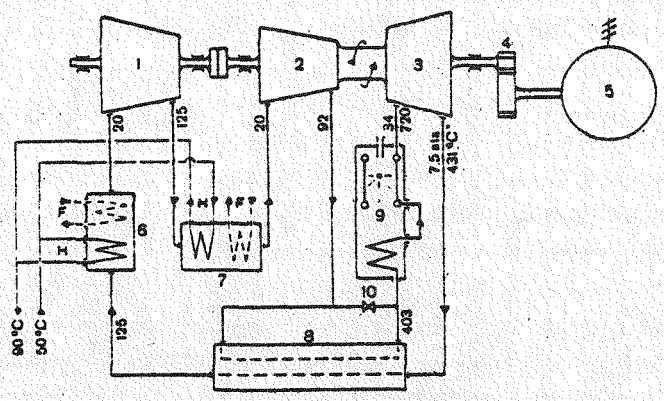

1 Compressor low pressure
2 Compressor high pressure
3 Turbine
4 Reduction gear
5 Generator
6 Pre-cooler
7 Inter-cooler
8 Heat exchanger
9 Air heater
10 Heat exchanger by-pass circuit
H Hot water part (remote heating)
F Fresh water part (cold water)

Fig. 22 Schematic Circuit Diagram of a Closed-Cycle Gas Turbine for Electric Power Production and Remote Heating

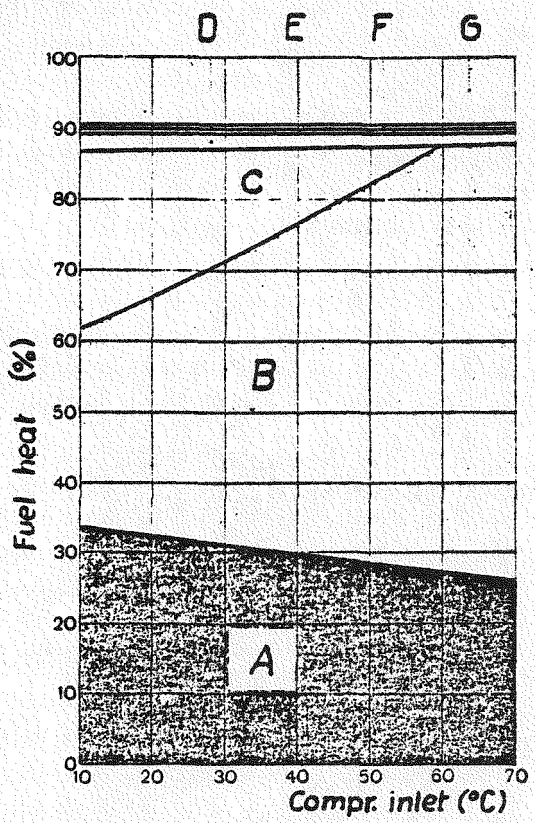

A Net output (thermal efficiency)
B Heating water
A + B Total energy efficiency
C Cooling water loss
D Mechanical and electrical losses
E Losses of auxiliary machines
F Unaccountable losses
G Air heater losses

Fig. 23 Diagram of the Combined Energy and Heat Production with a Closed-Cycle Gas Turbine Plant

interrupt the fresh water cooling completely and to leave cooling of the cycle to the returning heating water from the district heating system. In this case of course the electric efficiency drops but heat production can be boosted to 2 Gcal/MW-hr (8,000,000 BTU/KWh). In this case, the efficiency of the total energy systems is 80-85%, Fig. 23 (58). It should be noted that the closed cycle offers a flexible system for a total energy plant which cannot be achieved by steam or open gas turbine cycles.

The simplest and already remarkably economic cycle arrangement contains one heat exchanger and one intermediate cooler. With today's turbine inlet air temperatures of 700-750 C and fresh water cooling, this layout produces about 120-130 KW at generator coupling for each kg/sec circulating air. Therefore, for 25,000 KW the required mass flow is about 200 kg/sec. Usual pressures at turbine inlet are 30-40 atmospheres and favorable expansion ratios 4-5. In oil- and gas-fired plants, this results in an overall efficiency of about 33% in the 10-30 MW range. Better results can be achieved with two intercoolers. The mass flow drops and the efficiency rises to about 34-35% total plant thermal efficiency.

For outputs exceeding 25,000 KW intermediate heating (reheat) may be favorably applied. It must be remembered that the 12,500 KW pioneer plant (1952) at St. Denis already featured such intermediate heating. In this case the pressure ratio required in practice is much bigger, between 8 and 10. Correspondingly with the higher available heads, the mass flow drops remarkably and efficiency rises to about 36-38%. It should be noted that these figures contain all the losses and represent total plant efficiency.

2. Load Control and Part Load Efficiency

Considerable attention has been given to the selection of working fluids. Air, helium and carbon dioxide and various mixtures of helium, neon, nitrogen, and carbon dioxide have received the most attention (58,71,72).

Varying properties of gases with different atomic numbers with their individual isentropic exponents affect the cycle efficiency and the optimal pressure ratio. For instance, the one-atom helium leads to an optimal pressure ratio smaller than for air, while the three-atom CO_2 leads to a somewhat larger optimal pressure ratio than air. As helium has a much lower viscosity than air, pressure losses compared with air cycles are smaller. Heat transfer coefficients are high which lead to small heat exchange surfaces. Contrary to this is the behavior of CO_2. Helium is a very good working medium also from the engineering point of view. It is an ideal gas, but this is not the case for CO_2. When working with CO_2 in a closed cycle, the real gas characteristic must be taken into account. This shows a marked influence, especially for higher pressure levels. The same cycle looks

different at different basic pressures of 0.75, 5 and 30 atmospheres. The pronounced distortion of the pressure-volume behavior, even at relatively low pressures, reduces the compressor work and, on the other hand, boosts the useful output per kg of mass flow.

The considerable increase of specific heat with rising pressure results in a reduction of outlet temperature from the high pressure part of the heat exchanger, and consequently an increased fuel consumption. For the same reason the average temperature level of the heat input is lowered and therefore the thermal efficency of the cycle decreases. The CO_2 cycle shows a closer approach to the steam cycle in many respects due to distortion at higher pressures.

The general posture at present appears that, based on power level, air should be the working fluid at the lower power levels up to about 50 MW with a pressure ratio of 4:1 and 30-40 atmospheres maximum pressure level. Above 50 MW, and particularly for nuclear plants, helium seems to be the best choice. (This partially explains the 50 MW rating chosen for the Oberhausen II plant.) A pressure level of about 40 atmospheres would be used up to about 300 MW. Larger than 500 MW the pressure ratio of 2 to 2.5:1 would be used and a maximum pressure of 60-70 atmosphere.

4. Alternate Fuels

As mentioned above the large, separate combustion systems can be readily (within one or two days) converted for operation with widely varying fuels (from coal or peat to heavy oil, light oil, natural gas, coal gas, or coal derived fuels). The fuel-machinery related problems are concentrated in the combustion-heater system and removed from the more sensitive, high speed machinery which now is exposed to only clean, dry working gas. Most of the current operating plants have been designed with flexibility. Such changes in fuel have actually been done (Ravensburg for example), demonstrating the viability of the approach.

Long term operation with such fuels has demonstrated satisfactory operation of the system on the basis of life and performance. The question of environmental requirements is now no worse than for a fossil-fired steam plant. So far the fuels in general (coal, coke oven gas, and natural gas) have been low in sulfur, so there has been little trouble meeting regulations. Equipment or modifications (like stack gas clean up system) for controlling emissions can be added in accordance with local emission requirements, the available fuel, and the local fuel price. If legal constraints for the local environment are stringent (the trend is definitely in this direction) the option of using a low sulfur, gaseous fuel or stack gas clean-up system may be a practical expedient. Ultimately, fluidized bed combustion systems may come into use. Sulfur treatment appears easier with such systems.

5. Size of Equipment

As requirements for larger capacity stations continue to increase, an important characteristic of closed cycle systems can be further exploited. Because the whole system operates at an elevated pressure the physical size of the turbomachinery and heat exchangers is comparatively small by roughly a factor of 3. For example a 350 MW helium closed cycle system is about the same size as a 100 MW open cycle system.

6. Component Performance

Discussions with leaders in the field and recent literature (58) indicate the performance of key closed cycle components fall in the following ranges:

- Air heaters - Effectiveness coal fired:

- Small units (order of 2 MW)	85%
- Bigger units	85-90%
- Oil-fired	87-92%

- Auxiliaries in closed cycle (air heater blowers, coal mills, charging compressors, cooling water pumps, and oil pumps):

- coal-fired	6% plant output
- oil- or gas-fired	3%

- Turbine efficiencies 87-90%

- Compressor efficiencies 86-89%
  (only sets below 4 MW use radial compressors: above 4 MW axial units are used.)

- Heat exchanger effectiveness 85-90%
  (regenerator)

- Total pressure losses through piping and heat exchangers. 8-12%

D. Key Advantages

The following is a comprehensive list of the advantages attributed to closed cycle gas turbine systems. Although mentioned in several other places throughout the report as appropriate, this list is included here, so that all of the key points are concentrated in one place.

1. All fuels - oil, gas, coal, coal derived, and nuclear - can be used.

2. Waste heat from working cycle available at high temperature (100-200 C) and can therefore be used, contrary to steam plants, directly and economically (distant heating, total energy, combined cooling and heat production, seawater desalination, process heat in integrated chemical plants, process steam plants, cryogenic plants) (67,68).

3. Total use of fuel up to 85% through combined power-heating stations. This coincides closely with present impetus toward energy conservation.

4. Contrary to counter pressure steam turbines and conventional open cycle gas turbines, heat and electric power production are relatively independent of each other. At low heat need, full electric power is available with closed cycle plants. This is an essential property for economic combined, yet coupled energy production.

5. These are ideal circumstances for use of dry cooling towers. Their dimensions are drastically reduced compared with wet towers for current steam plants. This is due to the 8-10 times greater temperature difference available between cooling air and the water to be cooled. There is free choice of site with dry cooling towers, especially for high temperature, direct cycle nuclear plants - no loss of water and no fog plume.

6. Constant efficiency over a broad operating range by pressure level regulation of output. Plants with variable load are therefore also economical (Fig 24).

7. No moving parts (valves) on machines in the high temperature region; always steady temperatures at all loads (high safety, no temperature stresses); small number of auxiliary machines and sub-systems.

8. Very small dimensions of machines, heat exchangers, piping etc. due to elevated pressure level; small volume of power plants; no danger of deposits, fouling, and/or corrosion with drop of efficiency as in open cycle machines; low noise level.

9. It is possible to use different working gases (air, nitrogen, carbon dioxide, argon, neon or their mixtures). Helium will be the most useful for bigger plants above approximately 50-100 MW especially in direct cycle nuclear plants. Helium will not be activated atomically (become radioactive).

10. There is inherent safety with high temperature reactor - gas turbine systems; no danger of explosion; no circulator is necessary in the gas cooled reactor.

11. No need for high working pressures as in steam plants (max. pressure 40-70 kg/cm^2) for power sizes of a few (approx. 5 MW) to more than 1000 MWe, efficiencies are already high in small plants. Small and medium plants are economical where

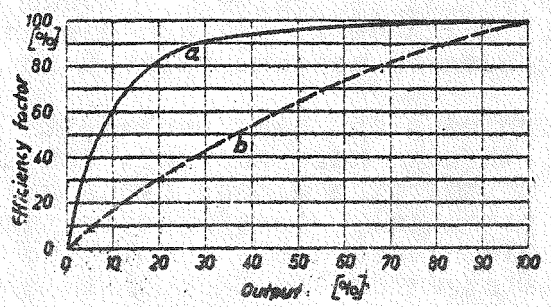

Fig. 24 Efficiency Curves for an Open and a Closed Process(a) Closed Process, (b) Open Process

power and heat are needed, i.e. industrial applications. Smaller plants can save costs by omission of expensive long transmission lines as necessary for gigantic (>1000 MW) steam plants. It is rational to create power or/and heat on site, or near where it is to be used (decentralized units). Closed cycle gas turbines can use all fossil fuels coal, oil and gas in the same heater, only by switching burners as demonstrated in the German plants.

12. The steam turbine plant has reached its current stage of development, through more and more complex cycles, which pay only for big units. The closed cycle gas turbine appears to have much future potential. Care must be taken in comparing today's still simple closed cycle plants (no reheat etc.) with the more elaborate steam cycles. Combined closed cycles can be developed too. A closed helium cycle giving its outlet heat to a binary cycle; i.e. a low temperature organic fluid, may show total plant efficiencies of over 50% producing about 33% more electrical output.

Also, special high temperature materials, such as molybdenum alloys (59) which can be used only in non-oxidizing atmosphere (helium) and which have very high stress-rupture properties at elevated temperatures. This can lead to very high working temperatures well above 1000 C with corresponding plant electrical efficiency of more than 50%.

E. Design Features, Trends, and Problem Areas

The following constitutes a list of pertinent topics, problem areas, design features and trends which emerged from the discussions and the literature. In essence they reflect the current status and trends relative to critical components and problems.

1. Gas Heater

Perhaps the most critical and limiting component of a closed cycle system is the gas heater. A schematic drawing, typical of the coal-fired heaters which have emerged, is shown in Fig. 25 (60). Essentially they are down-fired with a radiation section followed by a change in flow direction(for partial ash removal) and a convection section (60). Figure 26 (60) tabulates key design data for heaters in the German plants.

As the size of the plant increases beyond about 20 MW, the basic design switches to two heaters. For example the 30 MW Spittelau plant had two radiant sections feeding one convection section (58,59).

Problems in the past appeared in the form of tube ruptures due to corrosion. Solutions involved getting the right particle size of the coal and proper size and direction of the flame so that it does not impinge on the tubes in the radiant section.

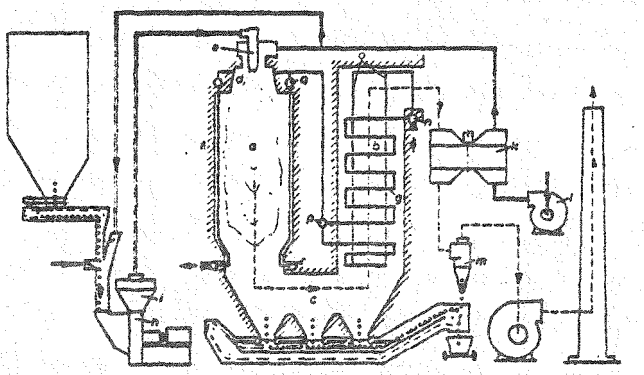

(a) combustion chamber, (b) upward pass, (c) reversal duct, (d) ignition muffle, (e) burner(s), (f) radiant section, (g) convection section, (h) coal mill, (i) classifier, (k) air preheater, (l) fan, (m) cyclone, (n) inlet header, convection part, (o) support tubes, (p) outlet header, convection part, (q) inlet header, radiant part, (r) outlet header, radiant part

Fig. 25 Schematic Diagram of a Coal-Fired Air Heater

Plant		Ravensburg	Coburg	Oberhausen	Haus Aden	Gelsenkirchen
Fuel	Dimension	coal	coal	coal/coke + oven gas[1]	mine gas + coal	blast furnace gas + oil
Number of combustion chambers	-	1	1	2	1	1
Shape of combustion chamber	-	round	octagonal	octagonal	octagonal	octagonal
Ignition muffle	-	with	without	without	with	with
Number of burners	-	3	4	2×4	5	8 blast f. g. + 5 oil
Ignition	-	light oil	town gas	town gas	mine gas	light oil
Working air						
Throughput	kg/s	26,5	86,5	129,3	66,6	153,0
Inlet temperature	°C	397	434	419	424	430
Inlet pressure	bar	34,5	38,0	36,1	31,8	40,5
Outlet temperature	°C	680	680	710	681	714
Outlet pressure	bar	30,5	36,0	34,5	30,5	37,8
Pressure loss	%	3,5	4,8	4,5	4,2	6,6
Combustion chamber						
Volume loading	MW/m^3	0,1547	0,1303	0,1593	0,1593	0,1093
Cross-sectional loading	MW/m^2	1,2677	1,4866	1,5119	1,5933	1,5817
Inside width between tubes	m	3,2	5,0	4,65	4,3	7,2
Length of irradiated tubes	m	7,5	10,15	9,5	10,0	13,5
Number of tubes	-	136	320	2 × 240	320	368
Tube dimensions	mm	32 × 2,5	32 × 3,0	32 × 2,75	31,8 × 2,5 - 3,0	40,8 × 5,0
Shape factor	m^{-1}	1,46	0,98	1,06	1,12	0,71
Tube arrangement ratio t/d	-	2,31	1,62	2,01	1,34	1,58
Preheating of the combustion air	°C	20 - 430	30 - 445	20 - 420	30 - 440	20 - 450
Exhaust gas temperature	°C	160	160	160	180	182

1) since 1971

Fig. 26 Main Data of the Heaters of the Closed-Cycle Turbines in the FRG (Federal Republic of Germany)

Proper tube material is, of course, important. Present experience indicates that about 1/3 of the tubes in the convection section should be of austenitic material, the rest can be lower cost ferritic material (65,66). Incoloy 807 is a current tube material being used.

It must be remembered that air heaters are considerably different from steam boilers. Internal tube pressures are lower (only 30-50 bars) and the specific thermal loading (cal/in^3) of the combustion chamber is different which influences the design. Stresses in the tubes are low (2 kg/mm^2). As a result they are smaller and lighter (25-40 mm dia; 2-4 mm wall thickness); and tube wall temperatures are higher (30-50 C above turbine inlet temperature). Recent experience has lead to some conclusions about the higher temperature tubes. The ask is dry and does not stick or build up a slag on the tubes. Slight vibration of the tubes is always present which shakes the ash off.

Another problem which was resolved involved internal fouling and corrosion of the tubes emphasizing the need to use dry air and to prevent moisture from entering the system (65). Again the right material is important to resist corrosion.

A central problem or question concerning the gas heater and also to some extent the other heat exchangers in the system is the cost. Fundamentally, because of the lower heat transfer coefficients associated with the gas-to-gas heat transfer process (as compared with gas-to-water or steam), larger surface area is required; initial temperature is higher. But as mentioned above the size and weight of the tubes are smaller. There is strong belief, that for established production processes, the cost is primarily dependent on the type and weight of the material. (In the automotive industry about 80% of the cost of finished high production parts is material cost). Aggravating this problem is the number of different designs and manufacturers which have been involved. The six closed cycle plants in Germany each had a different heater manufacturer.

A factor which has helped the situation in Germany and Europe is that the regulating authorities were persuaded to recognize that a gas heater is not a boiler. Hence, the heaters were built according to pressure vessel codes rather than boiler codes.

All of the elements, tubes, etc. in the closed system have been designed on the basis of 100,000 hours life. It has been suggested that selected tube sections in the high temperature zone of the heater be designed for a shorter life recognizing that they would be replaced periodically. Of course these sections would be designed for easy replacement. This might be an approach to lower cost.

Another approach which has been suggested is a binary system with gas (helium or air) in the high temperature zones and steam or another fluid in the low temperature zone. Although this might

increase efficiency and reduce cost ($/KW), the increased complexity would be a serious drawback. If rejected heat can be used for district heating, utilization of heat in the fuel can go above 80% with just a simple closed cycle.

2. Maximum Heater Outlet Temperature

A limitation to higher total efficiency of the closed cycle for electric power generation only has been the heater outlet temperature. Design limits for currently operating hardware go as high as 750 C for Oberhausen II and 720 C the Spittelau plant. Specialists indicated that the present state of the art would allow maximum heater outlet temperatures of 800-850 C. The St. Gallen plant in Switzerland, presently in the planning stages, is expected to have a turbine inlet temperature in the 700-800 C. The maximum temperature is limited by the heater capabilities.

These temperatures seem low when compared to open cycle temperatures which currently run to 1000 to 1100 C for advanced industrial machines. However, one manufacturer feels that higher temperatures and pressure ratios in closed cycle systems are not necessary since the gain in efficiency is only marginal particularly if district heating is used. At given pressure and temperature levels, pressure loss is the important design criterion for heater tubes.

Although there was some discussion about the use of ceramics (KWU uses ceramics in their open cycle burners) and other high temperature materials, the manufacturers did not appear to be doing much study or experimental work in this direction. However, the practical use of closed cycle helium turbines have much higher stress-rupture capabilities in inert atmospheres. Thermal efficiencies of over 50% have been projected for this approach (58,59,76).

3. Welded Ball Housings

A design feature which is apparent in the Oberhausen II plant is the welded spherical casings (Fig. 27) (66). This approach results in a lower, more uniform stress with thinner casing walls, smaller flanges and reduced flange bolts. Also, it has been used for cooling the casing to avoid the need for insulation inside the machine which might permit abrasion and, in nuclear stations, might lead to transport of radio-active particles. The system is comprised of three casings for the HP turbine. Each casing only has to support a pressure difference which increases with decreasing temperature level.

The bearing housings of the machine can be removed without opening the casing. This reduces maintenance time, because the casing is surrounded at the flange by a welded lip seal.

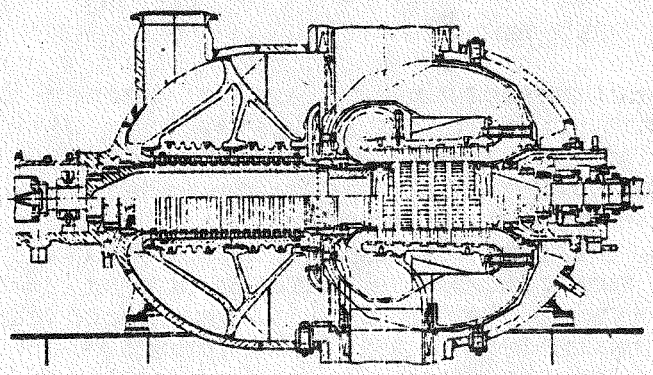

HP compressor and HP turbine of 50 MWe helium turbine

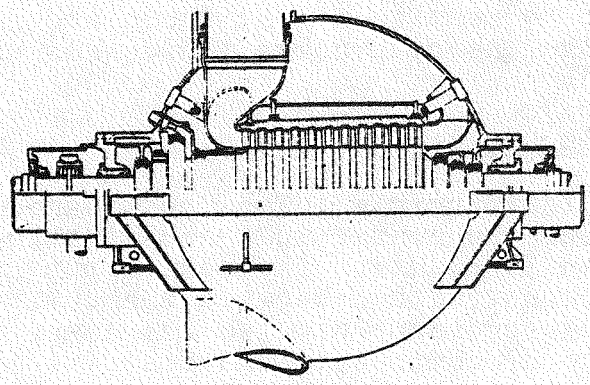

LP turbine of 50 MWe helium turbine

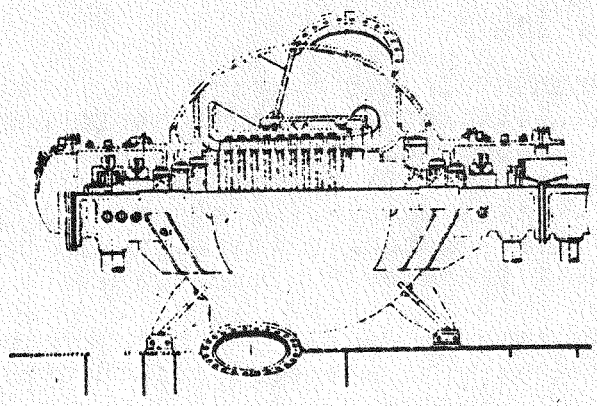

LP compressor of 50 MWe helium turbine

Fig. 27 Welded Ball Housings

4. Sealing Systems

The shaft sealing system, typical of Escher-Wyss machines, is shown schematically in Fig. 28 (58,62). With increased bearing oil pressure, use is made of a sealing helium and sealing oil system in which the pressure in the sealing oil tank automatically follows the variations of the circuit pressure (low-pressure side). In this, though, the lubricating and sealing oil flow, which may contain helium, is not mixed with the oil returning from the outer bearings, which contains air. This ensures that no air can enter the circuit. On the other hand, the helium returned from the pressure oil tank to the circuit passes through a separator, which absorbs the traces of oil. These precautions are necessitated in view of nuclear considerations.

It might also be mentioned that there are strong incentives for considering the use of process fluid (gas or helium) lubricated bearings (77).

5. Concentric Double Walled Piping

The double wall principle is now considered typical for the hot gas piping from the heater to the HP turbine. (It is used in the Oberhausen II plant). The center pipe is insulated and is of thin wall construction because the outer concentric pipe at almost the same pressure carries the compressor discharge pressure (from the HP compressor and from the recuperator). This not only conserves energy, but it also permits the use of cast steel for the lower temperature outer pipe wall which carries the maximum system pressure. It is important to make sure none of the insulating material finds its way into the gas stream (58,61,62). It is believed that this problem is solved.

6. Cost Comparisons

As with the open cycle gas turbine manufacturers, there is concern about realistic cost comparisons in the assessment of various types of powerplants. All parts and components must be taken into consideration such as cooling towers, feedwater heaters, etc., particularly for steam cycles. As mentioned above (V-E-1) heat exchanger costs should be based on weight rather than heat transfer surface area.

It is believed that no really thorough comparative cost analysis has been done with a modern closed cycle fossil-fired system.

F. Potential Markets and Special Applications

There are essentially two major manufacturers in Europe who have built and are ready to build closed cycle powerplants: Brown Boveri (Escher-Wyss has now been absorbed by Brown Boveri Corporation) and Guthoffnungshutte (GHH). The Energieversorgung

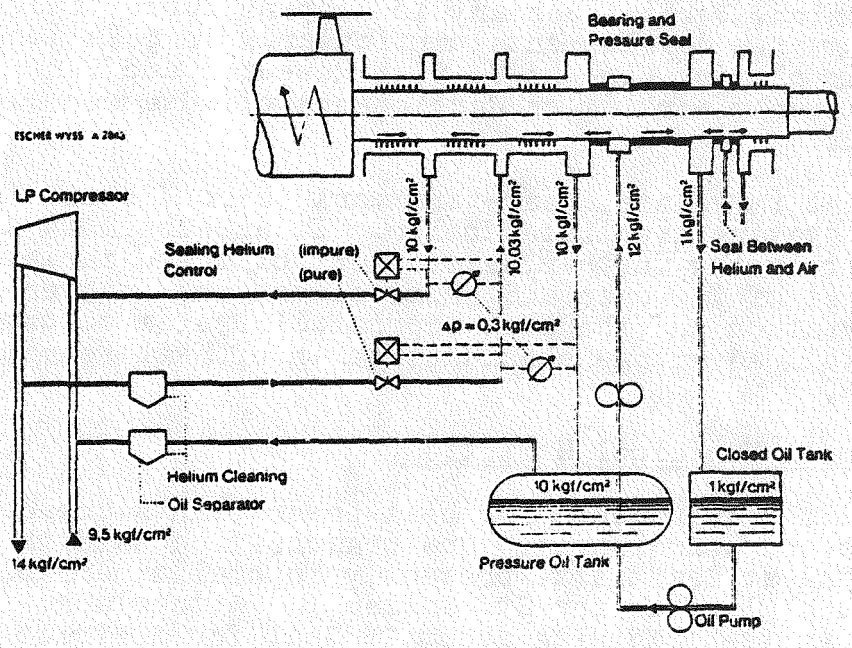

Fig. 28 Basic Circuit for Sealing Helium and Sealing Oil for Cycle with Variable Pressure Level. The Sealing Pressure is Automatically Adjusted to the Changes in the Lower Cycle Pressure

Oberhausen AG (EVO) organization is also available to participate in new plant engineering and construction. Sulzer Brothers Ltd. of Winterthur, Switzerland has built gas heaters. Kraftwerk Union, Berlin, Germany is keeping close track of closed cycle system developments particularly in relation to future nuclear plants. In the U. S. AiResearch and General Atomics are actively working on development of advanced closed cycle systems.

The most immediate, near-term markets for fossil-fired, closed cycle systems are listed below. It appears that an essential element in the further development of these markets is the basic interest of the user and prime contractor in over-all energy conservation and the most economical system to own and operate; i.e. full advantage should be taken of heat rejected from the system.

1. Small Municipal Utilities

Numerous requirements for heat-power plants are developing in Europe and Scandinavia. One organization said they were considering at least six, presently in preliminary planning stages. One such plant is for St. Gallen in Switzerland. It will be rated at 12-15 MW with about 15 Gcal for district heating.

2. Industrial Total Energy Applications

The chemical and process industries, manufacturing plants, shopping centers, etc. have requirements for electric power plus process heat (steam, hot water, or gas) and cooling. Often on-site heat-power plant makes sense from both economic and energy conservation viewpoints. Again cooperation rather than resistance from the local utility is an important element.

The use of rejected heat from closed cycle gas turbine heat-power stations will supply additional leverage to broaden its markets in two directions both for small utilities and industrial applications. Because the closed cycle can use dry cooling towers and be independent of rivers and streams, it can have an impact on water pollution (81). This is broadly applicable to industrial nations.

Another area where exhaust heat as well as electric power can be used is in the de-salination of water. It is estimated that a flash evaporator could supply 10 MW of power plus 530,000 US gallons of drinking water per day to supply about 10,000 inhabitants (67). This should be attractive for markets in developing countries.

3. Large Utilities

The main thrust of the utilities is toward larger capacity power stations using not only fossil-fired steam and combined cycle plants, but mainly nuclear power stations. There are

numerous incentives for using a direct, single loop, high temperature gas cooled reactor with closed cycle helium turbomachinery. Conceptually, this involves replacing the fossil-fired gas heaters with a high temperature gas cooled reactor. This is the avenue to higher capacity for closed cycle gas turbines; it might ultimately prove to be close to optimum.

Designs for helium turbomachinery and reactor systems have been made for ratings of 100,300, 600, 1,000 MWe (58,62,76,78). But there are many questions surrounding the larger sized reactors, systems and fruitful use of the rejected heat. The high cost and risk are not the least of the problems.

A shorter path, with lower cost and lower risk, to a second generation nuclear plant has been suggested by Dr. C. Keller (79). It was suggested that a small, Fort St. Vrain-type reactor be combined with an established turbomachinery design in a 300 MWe nuclear power station. The machinery and heat exchangers of the Oberhausen II plant are sized to simulate the size and behavior of a 300 MW system (62,66). Figures 29 and 30 show a design study of such a system. Thus, a significant power system can be built with essentially proven components to quickly demonstrate viability, operational safety and economic factors. This appears to be a sensible intermediate step before building a direct, gas cooled station in the 1000 MW class.

4. Power Generation Plus LNG Vaporization

Another potential near-term market for closed cycle heat-power systems has received considerable attention by both GHH (80) and Brown Boveri (Fig. 31). Several LNG terminals are planned in U. S. and Japan, Spain, France,Norway, and Italy. Vaporization takes place at a low temperature; constant vaporization heat is needed; power can vary down to 15% capacity. Vaporization heat is taken from the precooler, intercooler and gas heater stack gas. This greatly reduces the compressor work required increasing both power and efficiency. At a turbine inlet temperature of 510 C the electric output is 40 MW and the thermal efficiency is 45% If the turbine inlet temperature goes up to 720 C, the electric power increases to 61 MW and the efficiency to 52% with this system.

The manufacturers are ready to take orders for such plants.

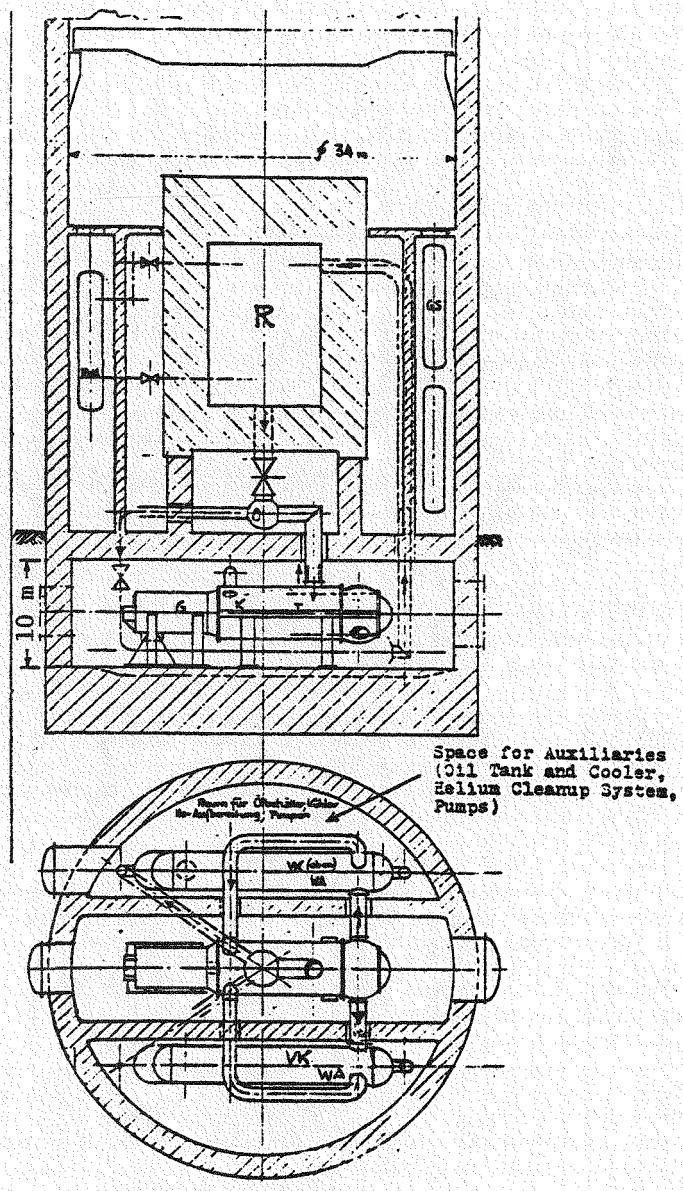

R - Reactor
G - Generator
K - Compressor
T - Turbine
VK - Precooler
WA-- Regenerator
NWA - Emergency Aftercoolers
GS - Helium Accumulators

Fig. 29 Design Concept for 300 MWe Heat/Power Nuclear Power System

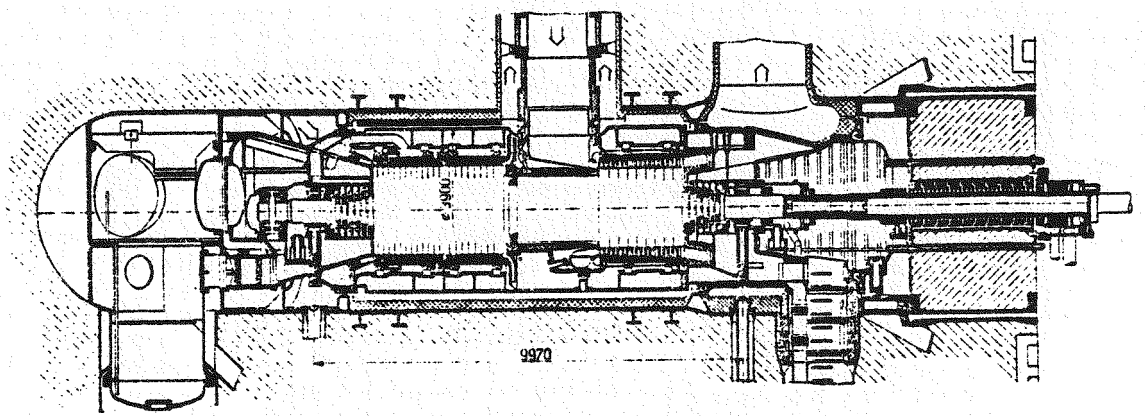

Fig. 30 Cross Section of 350 MWe Helium Turbine

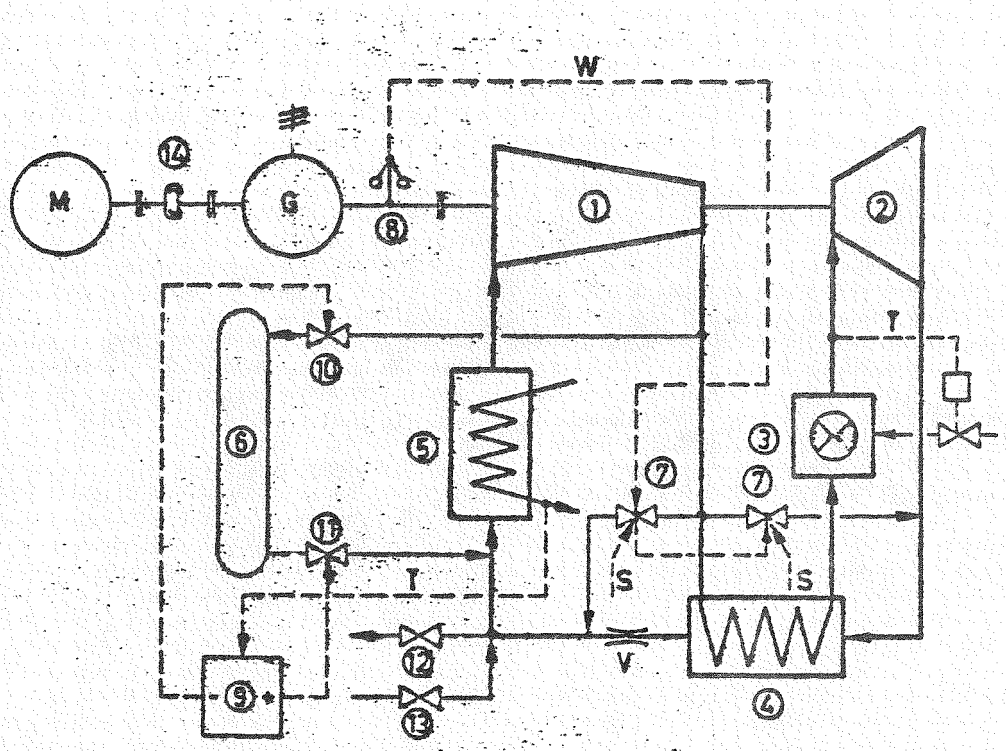

Fig. 31 N_2-Turbine for LNG-Regasification Control System

VI Nuclear Cycles

A. General Comments

The major trend and thrust is toward broader use of nuclear power plants. Regardless of environmental, safety, and siting delays, stretch-outs and rising costs, the incentives and pressures of natural resource depletion and distribution make significant use of nuclear power systems in the future inevitable. Equally certain are limited proven reserves of uranium, the necessity for quickly proving fast breeder reactor technology and the necessity for solving radioactive waste disposal problems.

The current generation of PWR's (82), BWR's and some CO_2 + steam, low temperature gas cooled reactors (in France) are in operation. Europe seems to generally favor the light water reactors for near term installation.

Of particular significance is the French demonstration of the Phenix Power Station, a pilot model 250 MWe, liquid metal, fast breeder reactor (83,137). This system cost about $490/KW; it has been in operation almost two years. Plans are now proceeding for construction of a 1200 MW Super Phenix plant. It is to be in operation in early 1980's.

Since France has some 10% of the proven world uranium resources and since they now import some 70% of their energy requirements, a decision was reached to go completely nuclear. Electricite de France does not expect to purchase any more fossil-fired equipment. However with the present efforts to modify the structure of their production facilities, there may be a need for additional peak capacity between 1990 and 1995. The two potential approaches are to use gas turbines or pumped storage systems.

There are numerous complex multinational, governmental/industrial consortia which have joined in various joint efforts and licensing arrangements to share costs and technology toward the commercialization and fruitfull exploitation of nuclear power systems. Two thrusts are: the near term application of light water reactors and longer range development of fast breeder reactors. A third thrust is toward the further demonstration and use of high temperature gas cooled reactors which relates to the subject of this report.

B. Direct Cooled Nuclear Systems

Work on direct cycle high temperature gas cooled reactors centers in three places in Europe:

- The High Temperature Helium Turbine Test Program in Julich, Germany.

- The Centre D'etudes Nucleares De Saclay Commissariate a L'Atomic Energie Atomique, Paris, France.

- Swiss Federal Institute of Reactor Research (EIR), Wuerenlingen, Switzerland.

It seems consideration of the indirect two-loop steam cycle has been dropped. All attention is now focussed on direct, helium cooled, high temperature reactor systems.

Much of this work is Government supported (Germany, Switzerland and France). The key companies involved are GHH, Brown-Boveri, General Atomics and Kraftwerk Union. It was recently announced (May 8, 1976) that the HHT program at Julich is being extended for another two years. The German government has asked BBC/KWU/G-A to cooperate, and share technical information and data. BBC and G-A already are joint owners of HRB (High Temperature Reactor Construction Company).

Proponents of the direct cycle, HHT system claim it has advantages of high efficiency, higher safety, lower cost, and smaller environmental impact (83,84,85,86,88). In numerous design studies which have been made of the direct cycle HTR's there appears to be a concensus of opinion on the desireability of concentrating on the so-called integrated design. This is a logical extension of present HTR designs in which gas turbine units would be located in cavities within the pre-stressed concrete reactor vessel. This eliminates the requirement for a turbine building or room. The gas turbines themselves pump the coolant around the primary circuit; separate gas circulators are no longer required. The removal of the problem of water-in leakage to the primary circuit is advantageous and also renders a possible simplification of the helium treatment plant. These factors can clearly result in capital cost savings compared to a conventional HTR/steam plant arrangement.

The environmental advantage of the HTR/gas turbine plant is that heat rejection is at a sufficiently high temperature level to effectively use dry cooling towers. This can be an important asset in Europe where steam plants at inland sites are often subject to limitations on the use of cooling water. Figures 32 and 33 (89) give relative size of nuclear plants and the open and closed cycle turbomachinery.

There is also attention being given to using the heat from HTR's for industrial process applications other than electric power generation. However, some of these applications require temperatures in the 1000 C range; more development is necessary (138).

Addition of waste heat power cycle using supercritical isobutane vaporized to 400 F (205 C) by the heat available from a 1500 F (815 C) top temperature gas turbine could raise the efficiency

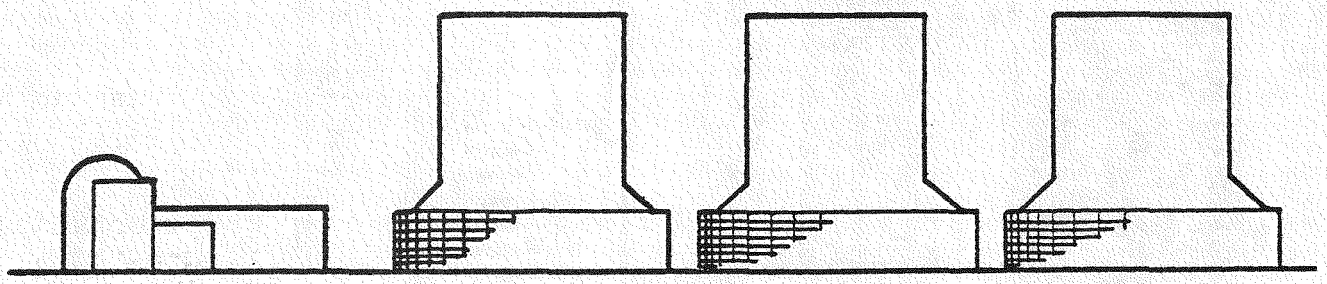

STEAM CYCLE
LOW EFFICIENCY (LIGHT WATER REACTOR)

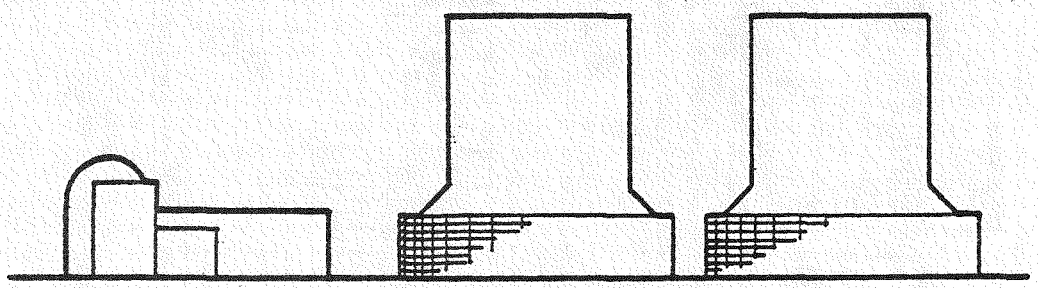

STEAM CYCLE
HIGH EFFICIENCY (HTGR)

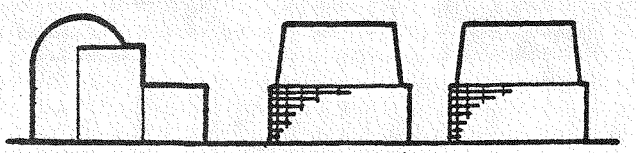

GAS CYCLE
HIGH EFFICIENCY (HTGR)

Fig. 32 Gas Turbine HTGR Plant vs Steam Cycle Plant

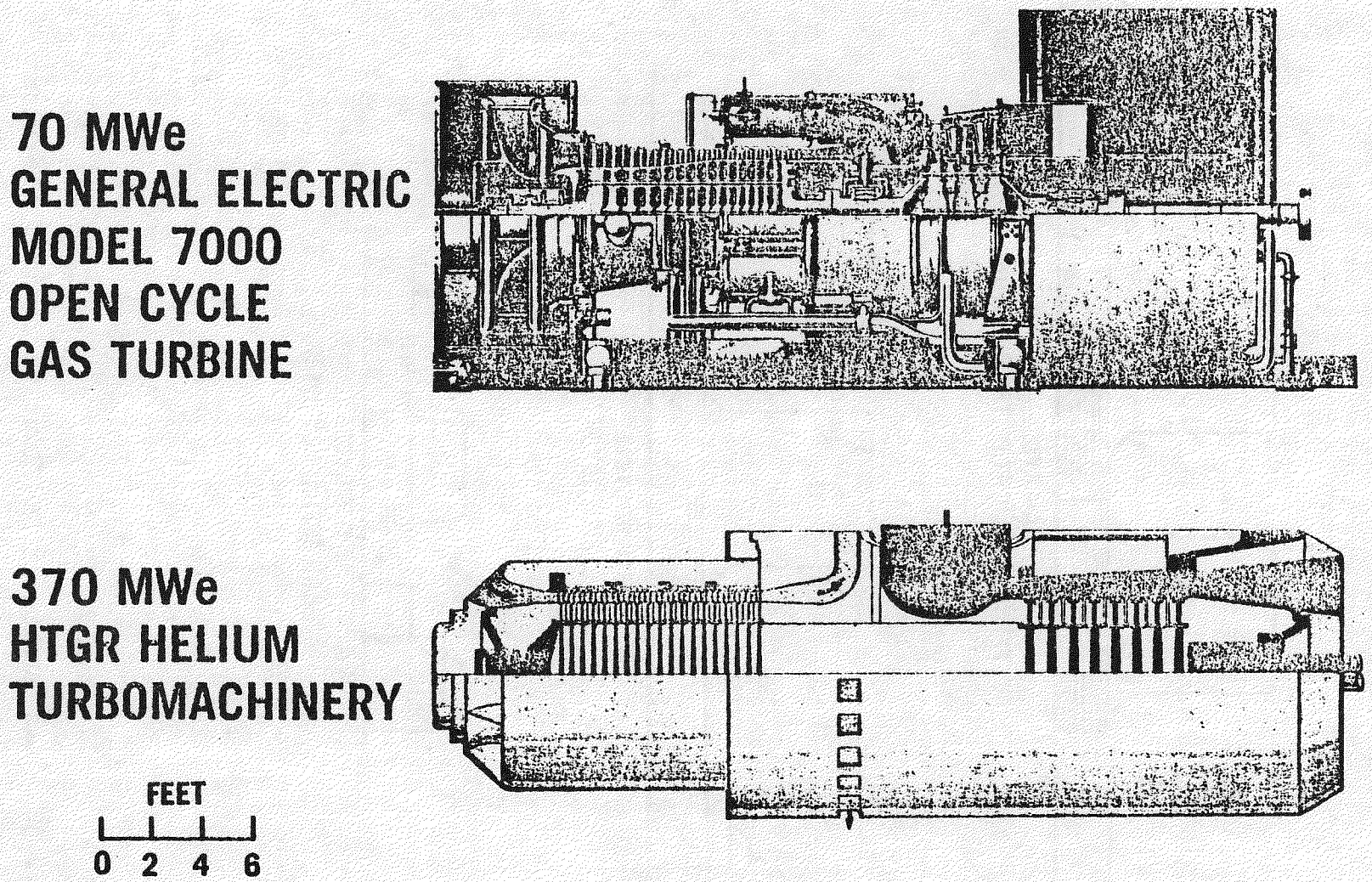

Fig. 33 Comparative Sizes of Turbomachinery

from an initial 36.6% (dry cooled) to approximately 47% overall when water cooled (84,85,86).

One of the most comprehensive economic assessments seen to date was done for ERDA (90). The abstract and tabulated comparative results are quoted here:

"This report is the culmination of a technical and economic assessment of an 1100 MWe direct-cycle gas-cooled reactor plant (DCGCR). The reference plant studied was a 1974 General Atomic design, consisting of an HTGR reactor, concentric heat exchangers, 3-loop horizontal turbomachinery and a dry cooling system."

" The technical evaluation concludes that the DCGCR plant can be realized by the early 1990's. The technology and capability exist in the HTGR gas turbine and heat exchanger industries to manufacture the basic helium components for DCGCR application, but there must be a concerted national research and development program to bring the concept to fruition. A major element fo this program should be the operation of a full-scale fossil-fired test loop prior to the construction of a large pioneer DCGCR plant. Areas of technological concern are identified and a program of resolution is recommended."

"The economic evaluation considered a number of parameters in the determination of the DCGCR viability. These parameters included water use, water availability, licensability, major component fabrication, component dependability, construction requirements, and power generation costs. One of the principal conclusions of the economic evaluation is that the cost to generate electricity for a coal-fired plant with SO_2 removal equipment, a LWR plant, and a HTGR-Steam Cycle plant is greater by approximately 50 percent, 10 percent and 8 percent, respectively, than the cost for a DCGRC plant of the same size. This comparison, as tabulated in Fig. 34, was based on two-unit dry cooled plants, and costs normalized to 1100 MWe for each unit and levelized over the period 1985-2000."

"The DCGCR and HTGR-SC have the potential of achieving cost reduction through design and optimization beyond the reference plant design evaluated in this study. This statement reflects the potential for evolution in the basic gas-cooled reactor design similar to that experienced for light water reactor designs. United Engineers & Constructors is evaluating a series of design improvements for the gas-cooled reactor concept based on results of this study as well as experience gained to date on commercial HTGRs. While the results of these studies are not as yet complete, it appears that the capital costs for a HTGR-SC plant in $/KWm will be equivalent to those for a light water reactor plant provided advantage is taken of the NRC (Nuclear Regulatory Commission) - imposed thermal limit. The cost advantages summarized for the DCGCR can be similarly improved."

"It should be noted that the economic characteristics of the gas-cooled reactor plant favor multiple unit installations. In

	Coal		LWR		HTGR-SC		DCGCR	
	Single Unit	Two Units	Single Unit	Two Units	Single Unit	Two Units	Single Unit	Two Units
Capital Cost	26.1	24.2	33.2	31.1	34.9	31.7	32.0	29.1
Fuel Cost	27.0	27.0	8.1	8.1	7.1	7.1	6.9	6.9
O&M Cost	6.3	6.3	2.8	2.8	2.6	2.6	2.3	2.3
TOTAL	59.4	57.5	44.1	42.0	44.6	41.4	41.2	38.3

Fig. 34 Capital and Operating Costs Levelized Cost (1985 - 2000) Normalized to 1100 MWe Each (Mills/kWh)

addition, its high thermal efficiencies permit it to provide greater electrical outputs than LWR's of the same thermal rating. Within the framework of current economic scaling practices, this works to the advantage of the gas-cooled reactor plant in terms of $/KW."

"The DCGCR plant is inherently most adaptable to dry-cooling towers due to its higher average temperature of heat rejection. Additional environmental benefits are associated with improved efficiency and reduced thermal release. However, preliminary surveys indicate that there are few areas where dry cooling will be mandatory during the next 25 years. Where wet cooling is available, the DCGCR can be built with a bottoming power cycle which promises a thermal efficiency of wet-cooled alternative."

Just recently it has been suggested, with considerable concurrence among specialists (79,87), that relatively small (300 MWe) direct cycle nuclear plants be built with essentially proven components, such as the Fort St. Vrain reactor and the Oberhausen II-type turbomachinery (See Figs. 29 and 30, Section V). These plants could be used for power generation and district heating, demonstrating high over-all efficiency with minimum financial and technical risk on a near term basis (little or no further development required).

VII Components

Further grasp of the status and trends in gas turbines in Europe can be obtained by considering each of the major components. The status and apparent trends which emerged from the discussions and cursory review of the current literature are identified in relation to compressors, turbines, heat exchangers, combustion systems, and controls.

In general European manufacturers appear to be more deliberate and conservative in their designs and do not incorporate unproven design features or components. As a result European machines tend to be large and heavy with good life and reliability characteristics. Except for CEGB in England, few aircraft derivative units have been used in the utilities except to supply emergency interim capacity requirements.

The viewpoint was expressed that American manufacturers have been trying to implement advanced technology too rapidly into industrial machines. Regardless, because of this push and because American manufacturers are competing in European markets through their licensees, many advanced design features such as variable geometry and blade cooling, are now being used by European gas turbine manufacturers.

Perhaps, to retain the image of reliability and conservatism, the trend to factory load testing of complete machines before delivery is emerging. Essentially this moves the initial "shakedown" and "de-bugging" of a new machine out of the customer's plant and into the manufacturer's facility. This allows more thorough test and evaluation; it can also relieve the customer of some expense.

It appears that European manufacturers have taken over the leadership in the production of large utility type turbines in the 100 MW class.

A. Compressors

Aerodynamic efficiency of compressors has been relatively stable for a number of years. Incremental improvements are obtained at the expense of increased design complexity such as variable inlet guide vanes, stator vanes and flow control. State of the art axial compressor adiabatic efficiencies fall in the 86-89% range for large subsonic machines. The FT-50 Compressor is designed for 91% compressor efficiency; initial tests showed 89% (41). The trend seems to be toward wider use of variable inlet guide vanes and some stator vanes. Also pressure ratios are moving upward to provide high power density and to match the optimum design points associated with higher turbine inlet temperatures which are definitely increasing.

Use of transonic or supersonic designs results in higher throughput and pressure ratio with fewer stages; usually with some sac-

rifice in efficiency and range of stable operation. Efficiencies in the 86% range can be expected. It appears the payoff or incentives for developments in this direction for utility applications are marginal.

Chronic areas of concern in compressors involve high cycle fatigue failures from blade vibration. Normal design techniques can usually handle this problem, but environmental effects (erosion and corrosion) can aggravate it.

Ingestion of salt and sulfur laden gases and moisture from the surroundings, also dirt, dust and ice particles have caused problems in the past. Erosion is generally experienced with partical sizes over 20 microns (22). Solutions to these problems are appropriate inlet filter systems and blade coating materials to prevent erosion and corrosion. Also deposits build up in the compressor section over a period of time requiring washing or cleaning procedures. Many companies use proprietary coating materials and techniques (such as aluminizing) to protect against low temperature salt water corrosion attack.

Such compressor problems do not seem to be as difficult to solve as the hot corrosion problems of the turbine and hot sections of the machine.

Airborne contaminants can also effect the hot corrosion life of hot gas path parts. This is perhaps the most important consideration in evaluating inlet air quality. Elements such as sodium, vanadium, potassium, and lead which are entrained in the gas turbine inlet air reacts with sulfur (sometimes in the fuel) to form sulfides which accelerate corrosion attack on blades and vanes. These elements are found in air near the sea (salt water mist), in solid particulates generated by industry (coal piles, fertilizer plants, chemical plants, etc.) or naturally in the basic content of the soil (22).

B. Turbines

Current state of the art turbine adiabatic efficiencies range from about 88% to 92% (41). The most significant trend is toward higher turbine inlet temperatures made possible by blade cooling techniques. Air cooled blades have been commonly used in aircraft turbines for a number of years permitting at least short time operation up to the 2200-2300 F range. The pressure for increased efficiency and power has accelerated adoption of these cooling techniques not only for aircraft derivative units, but also for heavy industrial units. Maximum turbine inlet temperatures for peaking have gone as high as 2000-2100 F (9) (LM2500 and FT50). Initiated by American industrial manufacturers, most European manufacturers are also adapting cooling techniques. Implementation usually starts with first stage nozzle vanes and one or two rows of stationary vanes, and then the first rotating blade rows. Usually high temperature alloys can be used up to around 1500 F without cooling. Above that

provision for cooling must be provided if the turbine is to live. Typical blade cooling systems are shown in Figs. 35 (41), 36 (93) and 37 (94).

The turbine inlet temperatures commonly used in the heavy industrial European turbines fall in the 1600 to 1800 F range (9).

It is of interest that Siemens developed a turbine with water-cooled blades which was operated at over 2000 F turbine inlet temperature about 1952-55. It was installed as a test turbine at Badische Anilin- und Sodafabriken (BASF) (91,92).

The hot end of the gas turbine, particularly the hot rotating parts are the most vulnerable and critical elements of the whole machine. The combination of high dynamic loads and high temperature, as well as erosion and corrosion from the combustion products of air and fuel make the turbine section a prime factor in determining the life and overhaul periods of the machine.

Most of the heavy industrial machines are designed for 100,000 hours life based on the varying criteria developed by each manufacturer from high temperature stress-rupture, creep-rupture, and fatigue properties of the materials. Assuming that these factors are properly applied to the design and that the rotor dynamics of the machine and that the specified manufacturing processes are properly implemented, mechanical failures and shortened life usually result from poor quality fuel, contaminated fuel, ingested contaminants in the air or some unusual operation or maintenance procedure. The effects show up early as fouling or deposits, erosion or corrosion of the blades or hot gas path parts or cracks in the material. Later, of course, this leads to mechanical failure of the blades or parts which can lead to destruction of the machine. Terms most frequently encountered for these failure modes are sulfidation and hot corrosion.

This focuses attention back on the combustion system (Section VII - C), the nature of the fuels and fuel treatment (Section VIII), and overhaul and maintenance (Section IX).

Numerous coatings and surface treatments are used to protect or inhibit corrosion of blades and hot parts. Some of the coatings tested by GE on IN738 (superalloy bucket material which they specify because of its hot corrosion resistance) are listed below (22):

Coating Material	Application Technique
CO-CR-AL-Y	Electron Beam
MDC-9 (Al-Cr)	Diffusion Bonded
MDC-1 (AL)	Diffusion Bonded
RT-2 (Cr)	Diffusion Bonded
RT-21 (Similar to MDR-9	Diffusion Bonded
RT-22 (Platinum-Chromium-Aluminide)	Diffusion Bonded

First-Stage Nozzle Vane Cooling

Combination of film, impingement, and convection cooling (borrowed from advanced aircraft engine technology) is used to cool the first-stage nozzle vanes — to keep metal surface temperatures below the 1500°F threshhold of sulfidation attack.

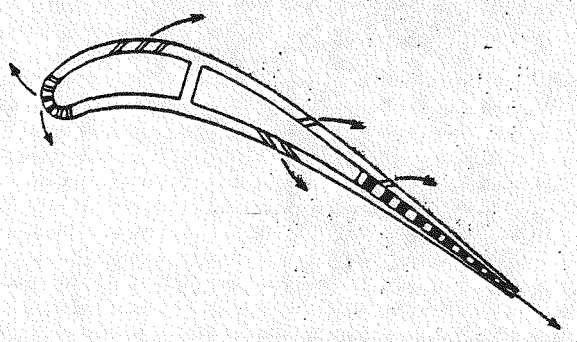

Effectiveness Of Vane Cooling

Cooling system is designed to limit peak surface metal temperatures to 1500°F maximum, as shown here for 2500°F hot spot gas temperatures, where the trailing edge remains 1000°F cooler than the hot gases.

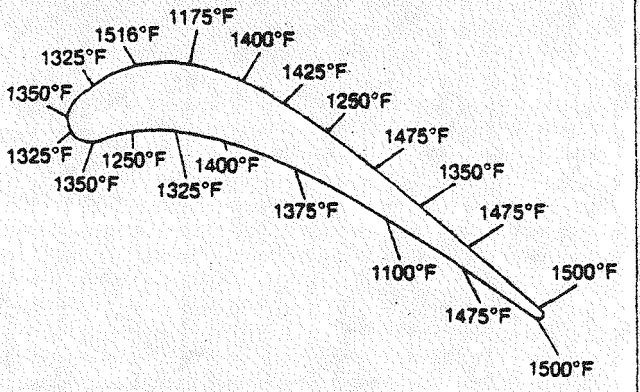

First-Stage Turbine Blade Cooling

Designed to keep surface temperatures below 1500°F at a rotor inlet temperature of 2150°F At higher temperatures the cooling flow can be increased to keep the blades at 1500°F.

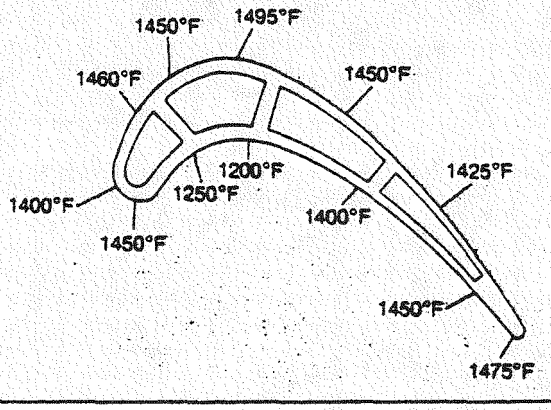

Turbine Blade Platform Cooling

Platform section of the first-stage turbine blade is also cooled below 1500°F as shown here, for 2150°F rotor inlet temperature, by isothermal plot of the design temperature distribution.

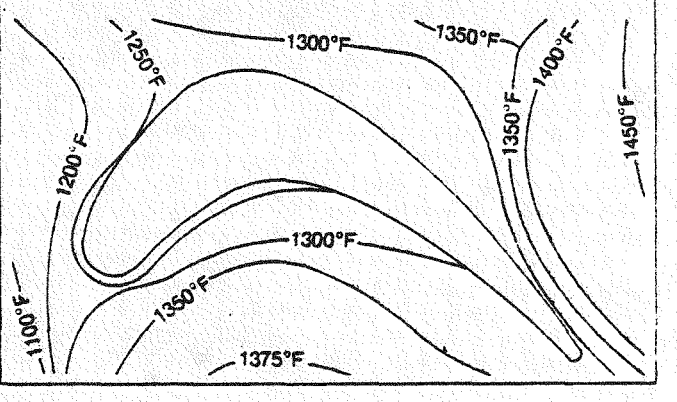

Figure 35

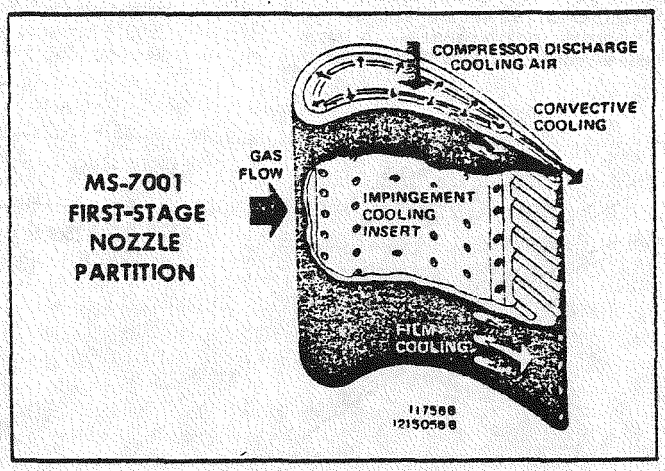

Figure 36

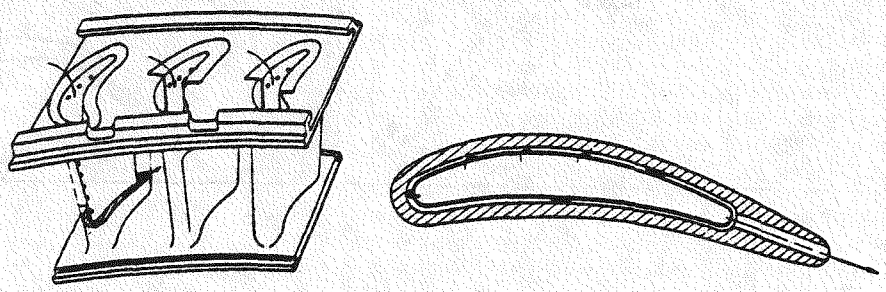

Fig. 37 First and Second Stage Nozzle Vane Cooling Scheme

Best results were obtained with RT-22 based on tests in a Model 5002 rotor in the field. The coating added 50% to the bucket life for approximately 15% increment in the cost of the bucket (Fig 38)(22).

It appears the trend for future development is toward higher turbine inlet temperature through cooling of the critical components. Although the German government is supporting research and development on ceramic materials, this is directed toward smaller machines. There was no indication of much effort being directed to the use of ceramics for turbine blades or vanes for large industrial machines. It should be noted however, that Kraftwerk Union uses ceramic tiles in their combustion chambers.

C. Combustion Systems

The current emphasis on burning a wide variety of fuels and on maintaining very low pollution levels in the exhaust has thrust the combustion system into the development spot light. The whole area of fuels, and combustion is getting major attention particularly in America. There is also much uncertainty because legal constraints on emissions are in the formative stage. The requirements which will be established relative to the state of the art capability is difficult to predict. Bascially the gas turbine can burn a wide variety of fuels, but how wide and for how long? Also, the gas turbine is able to operate with very low emission levels; but with what fuels?

The European markets and manufacturers have had to cope with a generally wider range of fuels; their emission requirements, although getting tighter in particular geographical areas, have generally not been as stringent or been enacted as rapidly as in America. As a consequence, the most salient difference between U. S. and European heavy industrial designs is in the size of the combustion chambers. Brown Boveri, Sulzer, Kraftwerk Union, and Stal Laval all have only one or two large combustion chambers as compared to the perhaps more compact U. S. designs which typically use a number of combustion cans or baskets. These characteristics are illustrated in Figs. 39, 40, 41, and 42. It is not certain whether one approach will prove to be generally superior to the other or not. Some of the advantages of a large burner, such as the Brown Boveri unit (Fig. 43) (96, 112) are that adjustments can be made to the injection, atomization, and air flow systems to accommodate widely different fuels including low BTU gas; the burner can be entered for visual inspection not only of critical burner parts, but also of first one or two high temperature blade rows of the turbine.

Considerable experience with long term operation in blast furnace gas applications has been accumulated which is applicable to the present requirements associated with various gasification

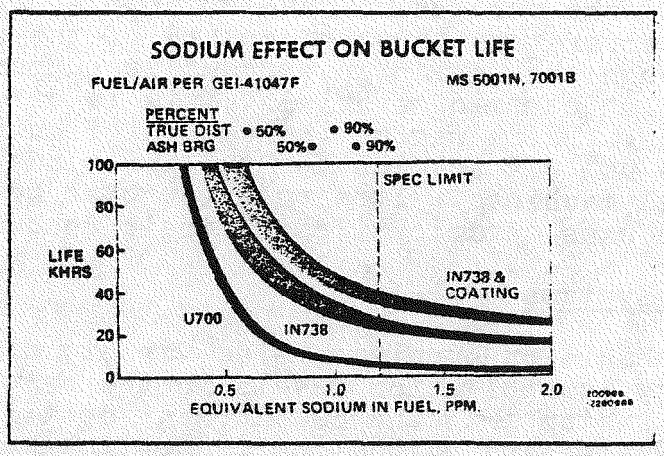
SODIUM EFFECT ON BUCKET LIFE
FUEL/AIR PER GEI-41047F
MS 5001N, 7001B
PERCENT
TRUE DIST • 50% • 90%
ASH BRG 50%• • 90%
SPEC LIMIT
LIFE KHRS
100
80
60
40
20
0
IN738 & COATING
U700
IN738
0.5
1.0
1.5
2.0
EQUIVALENT SODIUM IN FUEL, PPM.

Figure 38

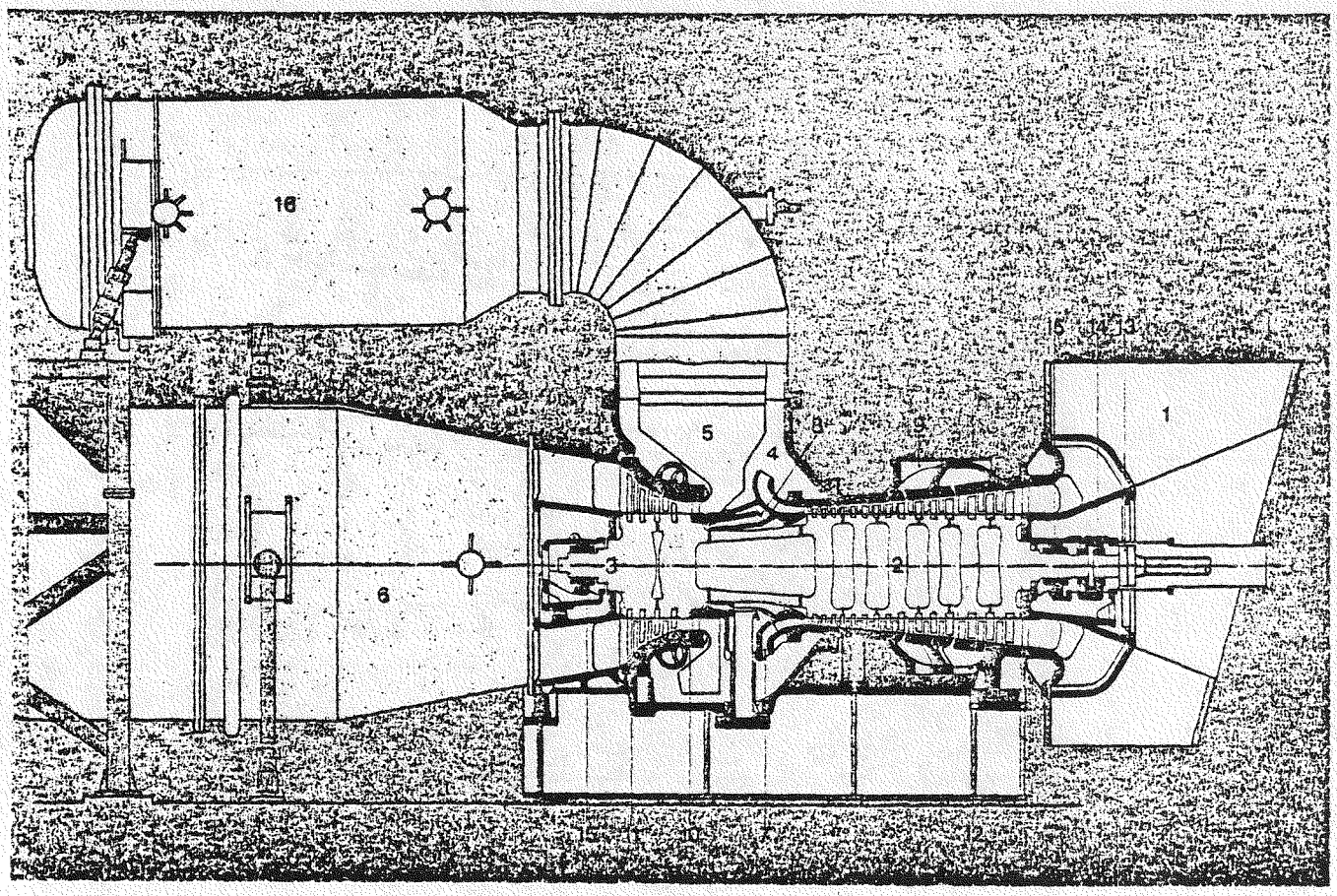

This drawing shows some of the notable design features of the type 9 gas turbine:

simple rotor composed of elements joined by a patented welding technique

two bearings only

simple combustor, simple burner

1 Air inlet
2 Compressor rotor section
3 Turbine rotor section
4 Air to combustion chamber
5 Hot gas from combustion chamber
6 Exhaust-gas diffuser
7 Compressor diffuser
8 Cooling air inlet
9 Bleed valves
10 Stator blade carrier
11 Gas turbine cylinder
12 Base plate
13 Coupling
14 Thrust bearing
15 Journal bearing
16 Combustion chamber

Fig. 39 Section Through BBC Type 9 Gas Turbine

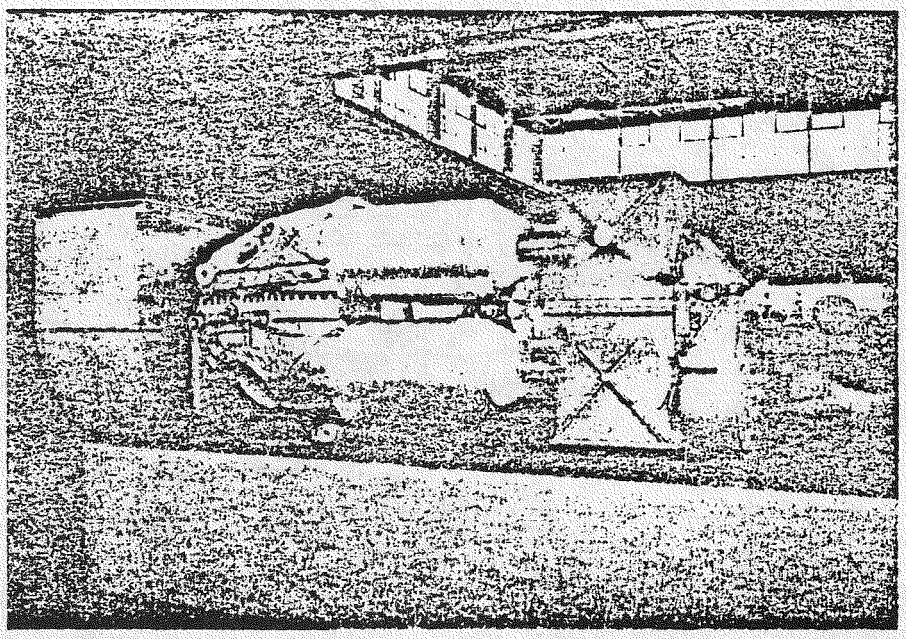

Fig. 40 Sulzer Type 3/S3, 4 - 6 MW with Four Combustion Chambers

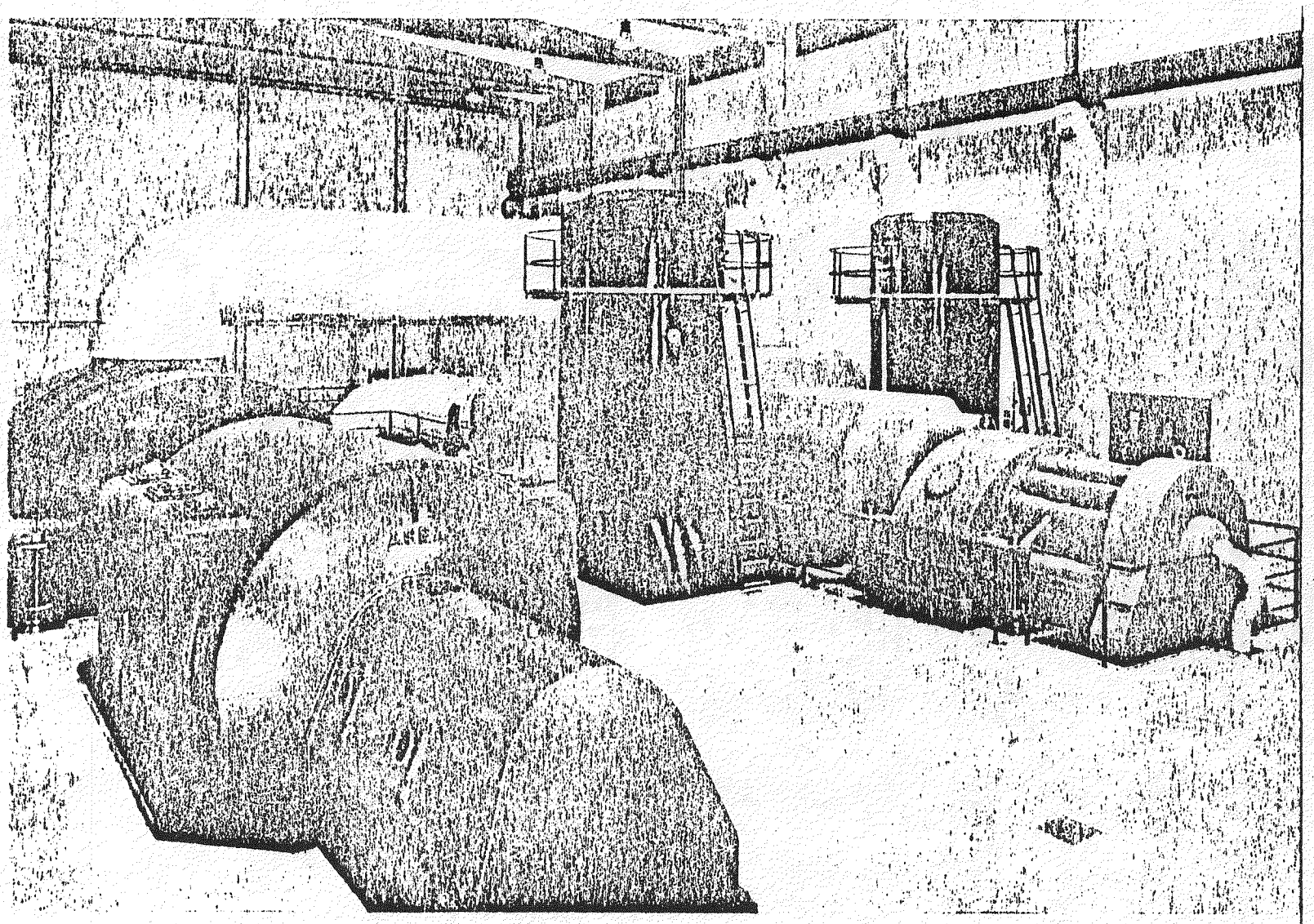

Fig. 41 45 MW Gas Turbine Plant in North Sweden in Operation Since 1962

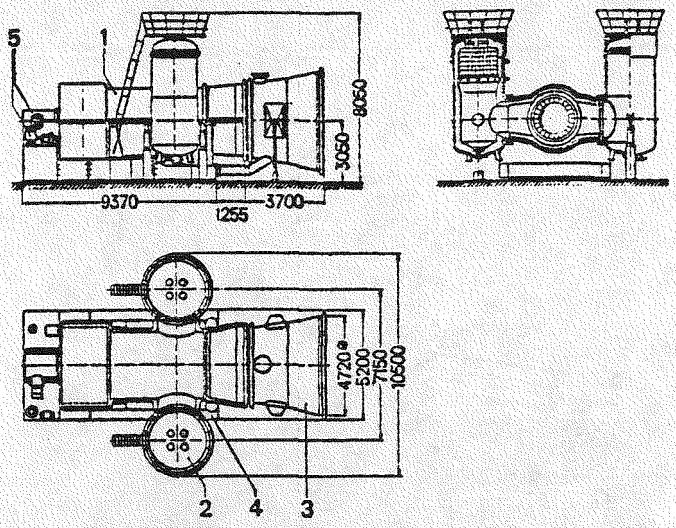

General layout of a 50 MW gas turboset

1 Compressor and turbine
2 Combustion chambers
3 Exhaust diffuser
4 Baseframe
5 Oil pumps

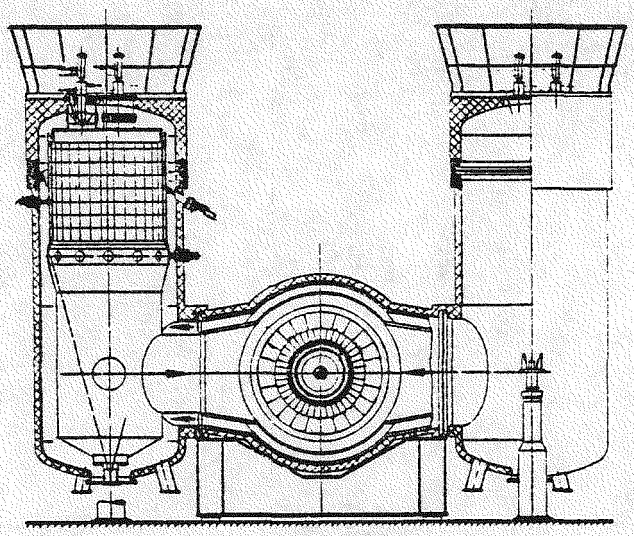

Section through a Type V 93 gas turbine at the combustion chambers

Fig. 42 Schetches Illustrating Typical Size and Orientation of KWU Combustion System

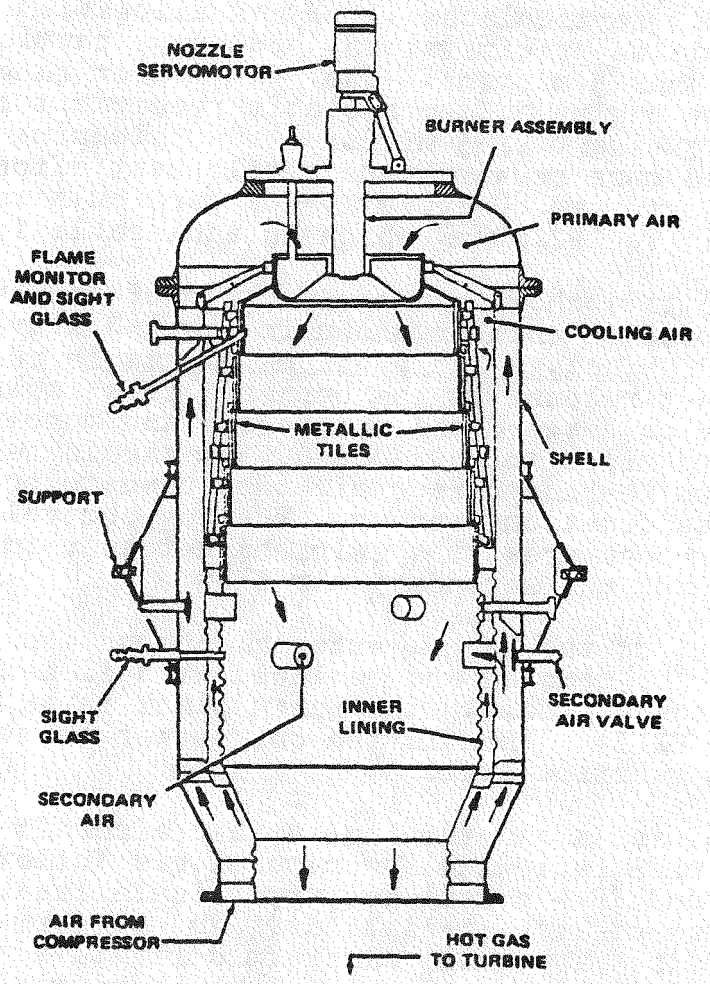

Fig. 43 Combustion Chamber

processes for coal and residual oil (141-144). Nominally this means low BTU gas to the gas turbine. The blast furnace gas had to be cleaned. Particulates (1PPM max allowable) were removed with electrostatic precipitators. BBC says particle sizes should be kept less than 5 microns. The 5-10 micron range is critical where errosion begins. Electrostatic precipitators removed 99.5% of everything over 5 microns. Gas cleaning methods and equipment need more research and development effort. Sulzer said blast furnace gas had 80-100 mg/m^3 of particulates. Precipitators reduce it to 1-2 mg/m^3 which is admissable for the turbine.

Figure 44 (96,112) shows a cross-section of the burner which goes with the combustion chamber shown in Fig. 43 above. When converting to low BTU fuel, a large volume of gas is required to give equivalent heat release in the burner. This implies consideration of re-match between the compressor and turbine. Flow from the compressor needs to be reduced. It should be noted that bleed-air from the compressor might be used to pressurize or supply the gasification process. The key control parameters for combustion process are: the swirl basket adjustment, the internal swirler, and the secondary air flow.

Another aspect of the large, external combustion chambers is that they can be removed and replaced with elements of the gasification process itself. The Lunen plant is an example of this (See Section VIII). This is the only power plant presently operating on gasified coal.

The best fuel for a gas turbine, either aircraft derivative or heavy industrial is low sulfur natural gas followed by light distillate, and JP-4 a kerosese type liquid fuel. The best results in terms of life, reliability, and performance are obtained with such fuels. Typically aircraft derivative turbines use pressure or air atomization systems. Some industrialized units use a vaporizing system. As the fuels get heavier, air atomization seems to be favored particularly when emissions are important.

It seems to be generally accepted that as the turbine inlet temperatures and compressor pressure ratios increase and general efficiency and performance of the engine are increased, the more sensitive it becomes to fuel quality. This definitely aggravates the problem of trying to burn dirtier and heavier fuels with acceptably low emissions. As the quality of the fuel deteriorates, the more important fuel treatment before combustion becomes.

D. Emissions

The most difficult pollutant for the gas turbine to eliminate is NOx, (oxides of nitrogen). The carbon monoxide, unburned hydrocarbons, smoke, ash, particulates, and even oxides of sulfur

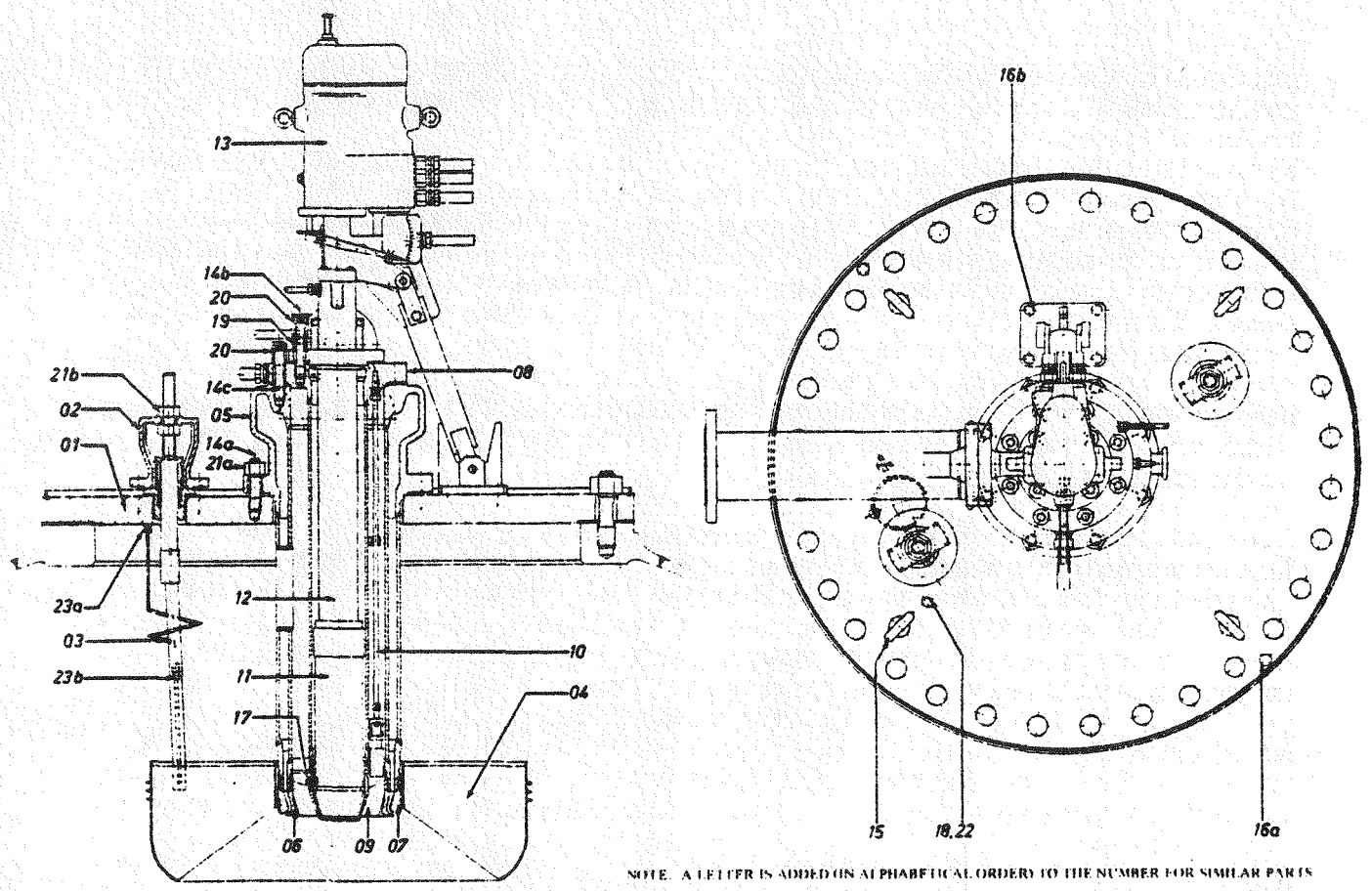

Item No.	Description	Item No.	Description	Item No.	Description
1	Cover	9	Internal swirler	17	Safety screw
2	Stuffing box	10	Ignition torch	18	Plug
3	Measuring pipe	11	Fuel injection nozzle	19	Expansion sleeve
4	Swirler	12	Fuel supply device	20	Capnut
5	Gas Burner case	13	Servo motor	21	Nut
6	Internal ring	14	Extension stud	22	Packing
7	External ring	15	Ring bolt	23	Screw connection
8	Internal case	16	Hexagonal screw		

Fig. 44 Dual Fuel (Oil and Gas) Burner

can be minimized with appropriate fuel treatment, adjustment of the combustion system, or if necessary, stack gas clean-up.

In general NOx originates from fuel bound nitrogen and nitrogen in the combustion air. NOx formation is largely a function of temperature and is readily formed when local temperatures in the combustion process exceed 2700-2800 F. This occurrs with droplet burning or when stoichiometric mixtures of fuel and air exist in local areas in the burner. Thus for lwo NOx emissions premixed, pre-vaporized, fuel-air mixtures is one approach to keeping the reaction temperatures below the critical levels. This can be done with gaseous and light liquid fuels by attention to the burner design, but with heavier, dirty fuels the problem is much more difficult.

The interim approach to NOx reduction needs in Europe and the U. S. is water injection. This tends to keep the peak temperatures down and makes it possible to meet current NOx standards (97-102). However, because this solution to the emission problem brings with it water supply and water quality problems, it is considered only an interim solution. Standards are going to get more stringent, and firing temperatures are going to get much higher. Hence, there seems to be a lot of research going on which is devoted to basic combustion system design and development to arrive at a more long term solution to the problem.

It should also be noted that water injection or steam injection has been used successfully in the past for power augmention (103-107). This was before emissions were recognized as a problem.

E. Heat Exchangers

As mentioned previously the trend seems to be away from recuperators unless there are special circumstances like the lack of water. Experience to date, has shown added complexity and cost with life and reliability problems which show up as leakage and cracking largely due to the cyclic thermal stresses. Usually these problems are resolved and certainly there are many successful recuperative machines in operation, but the emerging preference seems to be for exhaust heat boilers and combined cycles. The exhaust heat boiler provides significant increase in power as well as increased efficiency whereas the addition of a recuperator in the gas turbine cycle will increase the efficiency with a small reduction in power due to additional flow losses through the heat exchanger and piping.

The design and operation of heat recovery steam generators (HRSG's) seems to be no more difficult than conventional steam generators if they use supplementary firing, and much less difficult if they are unfired. Care must be taken to avoid low temperature deposits and corrosion and to use appropriate feedwater treatment.

Discussions with European gas turbine manufacturers did not reveal significant problems or trends other than the normal effort to reduce capital and maintenance cost.

One factor should be noted. Although efficiency is usually not a key factor for peaking units, current emphasis on conservation is causing more use of combined cycle machines for peaking operation (108). Hence, with frequent starts and stops, the rapid changes in thermal stresses in HRSG's is a factor which could have an effect on their failure rate and maintenance cost.

Another factor of interest: There appears to be a tendency for the gas turbine manufacturers to subcontract exhaust heat recovery steam generators to boiler manufacturers or other organizations specializing in that type of equipment. However the gas turbine manufacturer usually retains responsibility for the overall package integration.

F. Controls

Throughout the gas turbine industry there is a definite trend toward electronic digital and analog controls and automatic operation of the entire plant. Europe as well as the U. S. is participating in this trend. This is somewhat a reflection of the rapid technological progress in the electronics and computer industries.

The emphasis on combined cycles and more complex systems reinforces this trend because of the need not only to govern speed vs. load, but also to measure a number of operating parameters and calculate optimum operating conditions to minimize the heat rate of the plant (109,111). Indeed, some of the large utilities such as CEGB in England, have computer models of the whole network to optimize the use and loading of the specific units in their various power stations (110).

The availability of reliable instrumentation and electronics seems to be increasing the number of parameters which are monitored to assess the condition or health of the plant. These show up as additional read-outs and items on enunciator panels in the control room. When one of the critical operating parameters (pressures, temperatures, vibration level, flows) gets beyond its normal operating range a light or alarm is actuated indicating the location of the problem (See Section IX).

VIII Fuels

The status and trends of fuels is a very broad subject and it is of major significance at present. Only a few salient observations are included here as related to the specific scope of this investigation.

A. Natural Gas and Light Distillates

These are the traditional gas turbine fuels from which maximum performance, life and reliability are obtained. Most aircraft derivative units are restricted to such fuels up to low sulfur Diesel No. 2 unless special modifications to the combustion system are made. Usually some reduction in rating and efficiency is specified by the manufacturer if it is required to operate on a liquid rather than a gaseous fuel. Guarantees by manufacturers are predicated on the use of specified fuels.

In Europe the long term trend is away from these fuels; however in the short term there is of necessity a number of exceptions. In selected local areas such as the North Sea, England, Holland, etc. where limited oil and gas are available, special arrangements are made to use this fuel when specific circumstances warrant it. Many of the combined cycle plants are set up for dual-fuel operation.

B. Heavy, Crude and Residual Fuels

Economics and source availability play key roles in the sellection of fuels for gas turbine power generating systems (115). Regarding economics, the better grade of fuels will be higher in price, but will avoid some of the cost associated with the heavier fuels, such as treatment, heating and higher maintenance. On the other hand, availability of fuel in the proper quantities may be the deciding factor. For instance, the extreme scarcity of natural gas is now a reality and the use of the heavier grades of fuel oil is becoming a necessity. Also, the dynamic nature of the fuel market is such that fuel burning flexibility may be desired to allow for changes in the availability of various fuels.

Recognizing these circumstances, perhaps earlier in Europe than the U. S., gas turbine systems have been developed to accomodate a wide spectrum of fuels. However, the requirements of heating, additives, and water washing must be recognized when moving from the distillates toward the residuals on the fuel spectrum. The fuel contaminants such as vanadium, sodium, potassium, lead, and calcium, must be controlled to achieve acceptable parts life during long term operation. It should also be noted that these same contaminants might also be introduced through air ingestion or by water injection and that the combined effect of these sources in addition to the fuels must be considered.

The recommended physical and chemical property limitations of the fuels to be burned are specified in ASTM D-2880-71 which classifies and defines four types of gas turbine fuels (115). Although all the four Gas Turbine series fuels can be burned successfully, it has been found that certain elements are detrimental to the materials used in the hot gas path of most turbines. The total of these contaminant elements, vanadium, sodium, potassium, lead, and calcium, introduced into the hot gas path by water injection, air ingestion, fuel injection or other means, should not exceed the limits imposed by manufacturers specifications. In general manufacturers specifications vary somewhat, but follow the patterns established in the above ASTM specifications.

Since the specific values used are usually recommended limits, there will be some fuels that will require no heating, no treatment or special handling. However, even with clean fuels resonable care must be exercised so as to avoid contamination in transportation or storage.

Heavy, crude and residual fuels available for gas turbine use require treatment to be compatible with manufacturer recommended properties. With proper treatment, the necessary fuel flow characteristics can be achieved and corrosive metallic compounds be either removed or inhibited from the fuel (113).

By heating the fuel the required viscosities for satisfactory flow, pumping and atomization by the fuel nozzles are achieved.

Water washing systems involve the mixing of the fuel (which contains sodium and/or potassium), water and demulsifing agent, followed by separating the fuel from the water solution which has attracted the corrosive salts. Current technology enables this to be done by either a centrifugal or electrostatic method (114) of separation. Water wash is recommended when the total of sodium and potassium exceeds 0.5 ppm.

The addition of magnesium based additives to fuel which contain vanadium will inhibit the detrimental characteristics of vanadium in the turbine. Based on experience, a ratio of 3 parts magnesium for every part vanadium, has produced the best results. When the fuel reaches the combustor, the additive should be uniformly dispersed throughout the fuel. Treatment is recommended when vanadium content exceeds 0.5 ppm (115).

A number of refineries, particularly Shell refineries in Holland, have high sulfur residual fuels available at very low prices. Several European and at least one American manufacturer are seriously interested in providing integrated gasification - combined cycle power generating systems to use such fuels.

Three promising processes have been discussed and published (116). Two of these (Shell and Texaco) have been used, full

scale, in process industry installations and should be applicable to electric utility power plants with little risk. The fluidized bed process was demonstrated by an EPA funded 1 MW plant program which was followed by a study and design for a 50 MW utility unit. Data for these processes are given in Fig. 45 (116). Gulf Oil Company has a process for desulfurizing and treating residual fuel (117).

Because the effects of burning heavy and residual fuels in gas turbines has had such a profound effect on their life and reliability and because the problem is complex and empirical by nature, there has been a profusion of technical papers on the subject over the last 18 years both from European and U. S. manufacturers. Only a few listed here (118-126).

In general manufacturers believe the state of the art is such that their equipment can use such fuels successfully; however, they must know the properties of the fuels to be used, so they can specify the type and extent of fuel treatment system required. For example BBC has some units which are guaranteed to run 50,000 hours on crude oil. There is always some penalty in life, maintenance and first cost when using heavy fuels.

C. Coal Derived Fuels

European gas turbine manufacturers seemed to show more distant interest in coal, coal gasification, fluidized bed combustion, etc. They recognize the incentives and trend in this direction, but would prefer other organizations to do the handling, gasification, and processing and present the resulting low BTU gas to the turbomachinery with properties within the specified-tolerances.

However, all of them are aware of and seem to be watching closely the experience emerging from the Kellermann power station at Lunen, Germany. This is the only full scale plant in the world operating on gasified coal.

The plant was commissioned in 1972 and has accumulated some 7301 operation hours including 562 starts through December 1975.

This station was erected for the Steinkohlen-Elektrizitat AG (STEAG power company) of Essen.

- It has pressurized-furnace steam generators instead of the usual gas turbine combustion chambers.
- Coal gas obtained from five Lurgi gasification units is used as fuel.
- A waste heat boiler is used for feed heating.

Fig. 45 PARTIAL COMBUSTION GASIFICATION PROCESSES

	SHELL	TEXACO	FLUIDIZED BED GASIFICATION	
			Atmospheric	Pressurized
Fuel feedstock	any gas or liquid	any gas or liquid	any liquid	any liquid
Reactor temperature-°F	2400	2000-2800	1600	1600
Pressure-atmospheres	25	15-25	1	10-30
Oxygen source	air	air	air	air
Gas heating value-Btu/Scf HHV	130	130	200-400	200-400
Solids disposal req'd	negligible	negligible	yes	yes

This station is a promising attempt to introduce coal as an additional fuel for gas turbines. The inclusion of initial gasification of the coal in the cycle avoids the difficulties which caused the eventual failure of earlier coal-burning gas turbine projects. Although in overall concept this station may appear quite new, it is in fact built up from well proven plant components. This is also true of those items of equipment which are being used for the first time in this manner with a gas turbine, i.e. the coal pressure gasification plant and pressurized furnace steam generators.

Coal pressure gasification equipment of the Lurgi type has been successfully used in a variety of applications for many years. The same is true for the pressurized-furnace steam generators in Velox plants, although in previous applications the pressures have been lower and a gas turbine has not been included in the system.

This cycle has several notable points of difference from the normal gas turbine cycles: about 10% of the compressed air supply is bled off for the gasification process. Its pressure is raised by a separate compressor to the 22 kgf/cm^2 required for the gasification equipment. The necessary power is supplied by an expansion turbine which in the process reduces the pressure of the fuel gas to that required at the combustion chambers.

A machine which can operate as a motor or generator provides additional power or absorbs excess power when necessary.

The calorific value of the fuel gas is approximately 1250 Kcal/Nm^3 and is quite suitable for turbine operation since it is free of corrosive substances. The higher proportion of fuel gives a greater mass flow through the turbine than that with conventional gas turbines. This explains the higher pressure ratio of 9.5 against 8.5 and the greater power output of the gas turbine of 74 MW at 820 C turbine inlet temperature. As the annual hours duration of the station was specified at 3000 with frequent starts, the output of the steam turbine was set at 96 MW, which is considerably lower than would have been otherwise possible. The decision was made, however, because of certain advantages in capital cost.

The basic design of the gas turbine itself is similar to other KWU models except that the two flanged combustion chambers on each side of the machine (Fig 42) are replaced by steam generators, Fig. 45. Apart from other minor benefits, the division of the necessary capacity into two similar units offered the great advantage of keeping the overall size compact so that the fully assembled steam generators may be delivered to site as complete units.

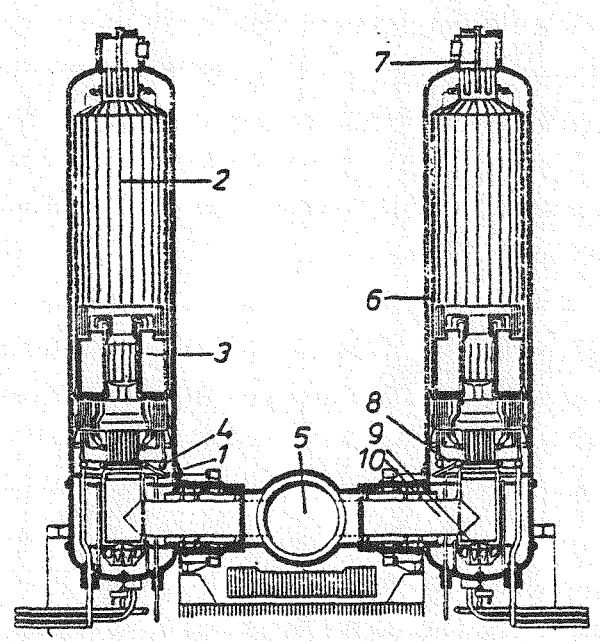

1 Feedwater inlet
2 Evaporating section
3 Superheater
4 Steam outlet
5 Gas turbine
6 Air shroud
7 Gas burner
8 Secondary air supply
9 Air regulating damper
10 Gas outlet

Fig. 46 Pressurized-Furnace Dürr Steam Generators

A plant of this type further extends the flexibility of the gas turbine in terms of suitable fuel and opens up further possible applications. It should not be forgotten that this cycle also provides an economic solution to the problem of sulfur removal (127).

Initial operation encountered some troubles adjusting the gasification to produce suitable gas; the problems now seem to have been corrected.

It is understood that this project was at least partially supported by the German government as a pilot project. Apparently two 400 MW plants based on the Lunen prototype are now in progress. They are to be commissioned in 1982.

It was observed that operating a gasification plant is indeed like operating a chemical process plant as well as a power plant. Problems of control during transients and upsets do not seem to be well defined. It was mentioned indirectly that the gas delivered to the pressurized boiler must be in the saturated condition (with water). If it is heated above the saturation temperature after washing, some sort of reaction occurrs and problems develop with tar deposits on the tube walls. Over-all economics need further clarification.

Methanol is another coal derived fuel. It is said to be a very good gas turbine fuel having good combustion characteristics and reportedly about 60% lower NOx emissions than No. 2 distillate. However use would require some changes in materials and handling due to low viscosity and lubricity and reactions with certain plastics, lead, magnesium, aluminum and zinc. Depending on the methanol/fuel mixture up to 5 to 6% higher power than on No. 2 distillate alone can be obtained with the same thermal efficiency. But, similar to napthas, twice the fuel flow rate is required. Methanol picks up and is miscible with water (139). Florida Power and Light Company has tested aircraft derivative peaking units with methanol with very satisfactory results (128,140).

European manufacturers did not mention methanol.

IX Maintenance, Overhaul and Repair

As the gas turbine industry matures and a larger number of units are in operation all over the world, questions regarding operation, maintenance and repair begin to increase in significance and assume an important role in the overall economics of owning and operating gas turbine machinery.

Factors which influence frequency of inspections and maintenance actions include not only the operational modes of the machine but also quality and handling of the fuel. Modes of operation are commonly identified both in the U. S. and Europe as "base load" - continuous operation: "mid-range" or intermediate - 2000-3000 operating hours per year with many stops and starts and "peak load" - about 1000 hours/per year with perhaps several hundred stops and starts. Some organizations also recognize a "peak reserve" - standby or emergency mode with high loadings for short periods (2). Almost every manufacturer has his own way of interpreting results in recommended inspection and overhaul intervals. In general frequent stops and starts are considered to be more severe than continuous running.

Fuel quality and handling begins to impinge on the individual maintenance policies, procedures and practices of the individual users or operators of the equipment. Maintaining cleanliness in a fuel system is of particular importance including the quality of fuel supplied to a user by a fuel supplier. One load of contaminated fuel can cause permanent damage in the form of hot corrosion of turbine blades and vanes. How a user starts, loads, shuts down a machine in peaking service can also have a direct effect on the life of the hot parts and forced outages.

Recognizing the need for field inspection and maintenance, package designers are giving this requirement much more consdieration in terms of convenient access openings, inspection plates, and provision for borescope inspection. Provision is made for easy replacement or repair of key components or complete modules. Many are borrowing from steam tuebine practice and providing for field balancing of the rotating elements (129-132).

In America trends toward "on condition" maintenance have moved strongly from the aircraft field into pipeline operation. Many units operate un-attended and maintenance actions are predicated on indications of problems or incipient failure (135,136). This trend has not yet been broadly accepted by utilities although they are aware of it. Much more monitoring and diagnostic instrumentation is being used. Interpretation technology of the measurements in terms of the internal condition of the machine and incipient failure detection is improving.

Use of these techniques and emphasis on maintenance is a reflection of a higher degree of sophistication on the part of gas

turbine users. Users in America including many European users have developed a very candid, very useful dialog among themselves and with the individual manufacturers involved on chronic failure problems (Gas Turbine Users Association). There is also a trend toward doing more repair and overhaul activities on-site, or to use independent service organizations (other than manufacturer) for repair and overhaul work (132,133,134).

These trends have not progressed as far with the utilities in Europe as they have in the U. S. There is still strong emphasis on preventive maintenance and periodic, open casing inspection of the machinery (131). Concurrently, the use of monitoring instruments and alarms is increasing.

X Summary and Conclusions

The salient economic factors in both Europe and the U. S. which are affecting electric utilities and their equipment operation and procurement are as follows:

- serious inflation followed by and in combination with a business recession.
- energy crisis dramatically brought into focus by the oil embargo demonstrating the finite aspects of world oil resources and the dependence of industrial countries on imports from oil producing countries.
- most countries implementing national energy policies and plans: to reduce this dependence on energy imports, to develop alternate sources of energy, and to conserve energy.
- growing concern for the environment and protection against water and air pollution predicated on a fundamental concern for long term public health and safety.

The environmental and long range public health concerns are in conflict with the concerns for energy availability and conservation. Obvious near term solutions to the energy problems involve the use of dirtier fuels or nuclear energy which has limited world resources and is surrounded by questions about safety and radioactive waste disposal. The European attitude toward these questions seems pragmatic in that higher priority seems to be on the availability and conservation of energy, but environmental factors are recognized and applied more selectively to specific geographical areas. Controls do not seem as stringent as in the U. S., but the trend is definitely in that direction.

These factors in turn have stimulated the following status and trends in the utility industry:

- Annual growth in electric power demand was radically reduced in most countries; in some countries it became negative in the 1974-1975 time period. This was largely due to industrial decline, but also conservation efforts had some effect.
- Money for new equipment and construction was not available, interest rates are high, and rate regulations did not permit rapid adjustments to increase revenue from the customers.
- Cancellations and stretch-outs in new equipment orders took place.
- Reserve generating capacity on many systems went as high as 40%.

The impact of all of these factors on the gas turbine industry was as follows:

- operation of simple cycle gas turbine peaking units was reduced in favor of more efficient combined cycle plants or more efficient steam plants.

- Utility market in the U. S. disappeared and almost disappeared in Europe. The industry was sustained through orders from oil producing countries, developing countries and other market areas (oil and gas, chemical and processing markets).

Now, beginning in early 1976, it appears that the U. S. economy is recovering from the business recession. Some European countries are also recovering - mainly Germany and France. There are numerous predictions about the anticipated annual growth in power demand between now and 1980-1985. It is expected that it will take one or two years to absorb the present over capacity. However, there are now numerous indications of recovery in the market - mainly inquiries and quotations for new plants are being discussed and tendered. Some orders are being placed.

Although the broad trends give gas turbine manufacturers much uncertainty, they are generally optimistic that the utility market will have a solid recovery and that gas turbines will play a significant role. Possible stretch-outs and delays with nuclear systems will augment the normal markets in the U. S. and Europe. Most manufacturers expect significant markets in the oil producing countries, and the developing countries in South America, Africa, and Indonesia.

Thus, the European utilities and gas turbine manufacturers are under much the same pressures as the U. S.:

- fuel availability.

- desire to reduce energy imports, use indigenous fuels, push for alternate fuel capability and flexibility in using most economic fuel available.

- energy conservation

- environmental constraints are imposed on an area by area basis, not yet as stringent as U. S.; somewhat more emphasis on noise reduction.

Consequently, emphasis in Europe is on increased thermal efficiency which is reflected by:

- higher turbine inlet temperatures and corresponding pressure ratios adopting blade cooling techniques from aircraft turbine technology; TIT's now in 1700 to 2000 F range.

- variable geometry compressors (mostly inlet guide vanes).

- use of combined cycle - exhaust heat recovery with supplementary firing because there is also demand for higher capacity in a single plant. Combined cycle gives higher efficiency and higher capacity.

- repowering; i.e. replacing an old or obsolete steam boiler with a gas turbine and a heat recovery steam generator - increases efficiency and capacity and makes use of existing steam turbine and auxiliaries investment.

- continued interest in use of turbine exhaust heat for district heating and cooling (cooling is not really a major factor as yet because air conditioning is not as widely adopted in Europe as in the U. S.).

Open cycle machines have a drawback in the district heating area since the generation of heat and electricity are functionally related and there is little independent control of heat and power.

Another drawback is: as turbine inlet temperature increases in open cycle machines the need for good quality fuel (gas or light distillate) also increases. Heavy fuels and coal derived fuels can be used and are being used (much operating experience is available), but the additional cost and complication of fuel handling and treatment facilities are required. This adds to the capital cost and may reduce reliability; it will certainly increase the operation and maintenance cost.

Most countries are counting on nuclear power to be a significant percentage of their total system generating capacity; however nuclear fuel, like petroleum based fuels, is predicted to be in short supply; hence major emphasis is on fast breeders, particularly in France. Also environmentalists are increasingly resistant due to thermal pollution of water and air, safety, and radioactive waste disposal questions.

Hence, there is renewed emphasis and interest in closed cycle heat and power systems:

- They can burn all fuels in accordance with prevailing local price and availability.

- Dry cooling towers can be used - no vapor plume, no water pollution, no restriction on site location.

- Independent control of heat and power production is possible.

- Very high utilization of heat content in fuel - over 80%.

- Numerous new plants are under study.

- Possibility using an LNG vaporization system as for cooling closed cycle precoolers and intercoolers offers immediate increases in efficiency and power capacity without increasing cycle temperatures. This system has received much design and analysis attention from European manufacturers; they are ready to quote on such systems.

In addition to the above advantages for fossil-fired plants, the direct, high temperature, gas cooled reactor with helium turbo-machinery appears to have many potential advantages. Several comprehensive studies and evaluations are in progress in France, Germany and Switzerland - particularly Germany and Switzerland. Claimed advantages are:

- increased safety

- higher efficiency

- lower cost

- no water pollution (dry cooling towers)

- reasonable physical size.

A particular interim plan for a full scale, but modest sized plant - 300 MWe - made of proven components has been suggested by Dr. Curt Keller as a low cost, low risk, short term demonstration of the direct gas cooled system with helium turbines.

XI Recommendations

It is believed there is much activity in Europe of a detached nature that is important, but which is not finding its way into the more formal channels of technical papers and engineering conferences. It is further believed that some of this information is available and could be obtained by personal contact and well directed line of questions concentrating on presently identified questions and problem areas.

It is suggested the following areas be considered for further investigation:

- Potential advantages and problems with using mechanical refrigeration systems to achieve low (cryogenic) compressor inlet temperatures for open and closed cycle gas turbines. Present interest in relation to LNG and super conductors should be included.

- More detailed information about the gasification - gas turbine interface problems with the Lunen plant should be obtained.

- More details about coal-fired gas heater system design methods should be obtained.

- Close liaison should be maintained with the people doing the direct cycle nuclear investigations in France, Germany and Switzerland.

LIST OF REFERENCES

1. Harmon, R. A., "Gas Turbines - An Industry with Worldwide Impact", Mechanical Engineering, March 1973, Pp 33-59.

2. Brown, R. A., D. R. Jones and J. J. Mayer, "Changing Electric Utility Economics and the Role of Combustion Turbines", American Power Conference, April 21-23, 1975.

3. Papamarcos, John, "Growth Erratic But On Trend Line" (Editorial), Power Engineering, April 1976, P 75.

4. Rittenhouse, R. C., "A Profile of New Generating Capacity", Power Engineering, April 1976, P 76-82.

5. Ehrenhardt, W. A., "Planning for Future Energy Requirements Under Changing Economic Conditions", GE International State of the Art Congress, May 1976, Dubrovnik, Yugoslavia.

6. Gatzmeyer, J. B., "Heavy Duty Gas Turbines in the Future Mix of Generating Equipment", GE Report 73T163.

7. 1976 Gas Turbine Catalog, Gas Turbine Publications, Stamford, Connecticut, March 1976.

8. Lewis, F. W., Vice Chairman EEI and President, Middle South Utilities, "Facing Reality in Electric Power", speech before American Power Conference, Chicago, Ill, April 20, 1976.

9. Gas Turbine Forecast, "The Market for Heavy Industrial and Marine Gas Turbines", Forecast Associates, Inc., May 1976.

10. "A Sudden Surge in Europe", Time, May 13, 1976, P 63.

11. Gas Turbine Forecast, "The Market for Light Industrial Gas Turbines", Forecast Associates, Inc., April 1975.

12. Gas Turbine World News, May 31, 1976, P 7.

13. Matthews, W. J., President National Electric Reliability Council, "Problems Facing the United States Bulk Electric Power Supply System", speech before American Power Conference, April 22, 1976.

14. Jenkins, N., "Heat Pumps and District Heating", - Letters Section, Energy International, April 1974, P 15.

15. (Total Cost from All Swiss Utilities); Bulletin SEV/VSE, July 27, 1974, P 1174.

16. "A Surprising Surplus of Electric Power", Business Week, September 15, 1975, P 34.

17. Hanfling, Robert I., E. C. Kovacic and R. M. Nelson, "Powerplant Productivity and National Energy Policy", American Power Conference, April 1976.

18. Gard, M., "Brestanica Repowering Plant Increases Output and Efficiency", G.E. International State of the Art Congress, May 1976, Dubrovnik, Yugoslavia.

19. Ketterer, R. J. and Dibeluis, N. R., "Status of Air Pollution Regulations Affecting Gas Turbines in 80 Nations", ASME Paper No. 74WA/GT-8, Nov. 17-22, 1974.

20. Hendriks, R. and A. Wondergem, "Powerplants Designed to Meet Environmental Standards in the Netherlands", G.E. International Gas Turbine State of the Art Congress, May, 1976, Dubrovnik, Yugoslavia.

21. Tyburk, C. J. and D. D. Aulds, "Repowering As A Solution To Lower Generating Costs", American Power Conference, April 20-22, 1976.

22. Patterson, J. R. and George, R. L., "Prospectus of World-wide Operating Experience", G.E. International Gas Turbine State of the Art Congress May 1976, Dubrovnik, Yugoslavia.

23. Li, K. W., "Compressed Air Storage in Gas Turbine Systems", ASME Paper No. 75-Pwr-F.

24. Ayers, D. L. and D. Q. Hoover, "Gas Turbine Systems Using Underground Compressed Air Storage", American Power Conference, April 29 - May 1, 1974, Chicago, Illinois.

25. Olsson, E. K. A., "220-MW Air Storage Power Plant", ASME Paper No. 70-GT-34.

26. Harboe, H., "Economical Aspects of Air Storage Power", American Power Conference, April 20-22, 1971.

27. Zaugg, P., "Air Storage Power Generating Plants", CIMAC Congress, Barcelona, Spain April 1975.

28. Cooper, V. R. and J. W. Pepper, "Rationale for the EPRI Thermal-Mechanical Energy Storage Program", American Power Conference, April 20-22, 1976, Chicago, Illinois.

29. Li, K. W. and N. R. Duckwitz, "Cycle Analysis of Air-Storage Power Plants", ASME Paper No. 76-GT-41, March 1976.

30. Chen, H. H., "Optimization of Pumped Storage Projects" American Power Conference, April 20-22, 1976, Chicago, Illinois.

31. Vasilescu, M. S., et al, "Design and Construction Blenheim - Pumped Storage Project", American Power Conference, April 20-22, 1976, Chicago, Illinois.

32. Lipsky, C. I. and E. T. Voelker, "Start-Up and Operating Experience; Blenheim - Gilboa Pumped Storage Project", American Power Conference, April 20-22, 1976, Chicago, Illinois

33. Yamaguchi, Y. and T. Takoh, "An Experimental Research on the Transient Phenomena of A Pumped Storage Power Station", ASME Paper No. 76-FE-17, March 1976.

34. Weber, O., "The Air-Storage Gas Turbine Power Station at Huntorf", Brown Boveri Technical Review, Vol 62, July/August 1975, Pp 332-337.

35. Mattick, W., O. Weber, Z. S. Stys, and H. G. Haddenhorst, "Huntorf - The World's First 290 MW Gas Turbine Air Storage Peaking Plant", American Power Conference, April 21-23, 1975 Chicago, Illinois.

36. Chervishev, Polischuk, Tatiankin, and Fiveisky, "Experience with Development Work and Manufacture of 100 MW Gas Turbine Plant at LMZ", ASME Paper No. 70-GT-30, May 1970.

37. "USSR Turnkey Erection of Two 100 MW Sets In Hungary", Gas Turbine World, March 1976, P 16.

38. Uvarov, Beknev, and Manushin, "100's and 1000's MW Open and Semi-Closed Cycle Gas Turbines for Base and Peak Operation", ASME Paper No. 74-GT-160, March 1974.

39. "GE Division to Sell European Firms Gas Turbine Components for Soviets", American Metal Market/Metalworking News, June 7, 1976.

40. "West German Firms Get $575 Million Job on Soviet Gas Line", Wall Street Journal, June 1, 1976, P 14.

41. de Biasi, V., "FT50 Design Shortcut to 1980 Technology", Gas Turbine World, November 1975.

42. Jacob, R. O., Barta, R. W. and Huhtanen, P. H., "Utility Experience with Regenerative Cycle Combustion Turbines", ASME Paper No. 76-GT-85.

43. Kennedy, C. A. and R. P. Lang, "Early Experience with A 31,050 HP Regenerative Cycle Gas Turbine", ASME Paper No. 75-GT-53.

44. "Curtiss-Wright Places Large Order for LM5000 Gas Generator", Gas Turbine World News, March 31, 1976, P 4.

45. Hurst, J., "Today's Aero Engines Offer Utilities High Power, High Efficiency", Energy International, March 1976, P 23.

46. Ecabert, R. J., "Steam Generators for Combined Steam and Gas Turbine Plants", ASME Paper No. 66 GT/CMC-63, March 1966.

47. Goebel, K., "European Approach To Combined Cycles Brings Early Energy Savings", Energy International, March 1975, P 20.

48. Herdlevaer, J., "Combining the Advantages of Steam and Gas for Improved Base Load Operation", GE International Gas Turbine State of the Art Congress, May 1976, Dubrovnik, Yugoslavia.

49. Burke, C. J., "Combined Cycles Face A Bright Future", Energy International, April 1974, P 19.

50. Willson, E. J. Jr., "Repowering: An Economic Alternate for Meeting Mid-Range Power Requirements", ASME Paper No. 73-GT-35 April 1973.

51. Pfenninger, H. and G. Yannakopoulos, "Steam Power Stations With Pressure-Fired Boilers", Brown Boveri Review, July/August 1975, P 309.

52. Muhlhauser, H. and W. Eckert, "Steam Turbines in Power Stations for Peak and Medium Load", Brown Boveri Review, July/August 1975, P 285.

53. Flad, J. and C. Hergott, "Combined Cycle Answers Saarbrucken's Total Energy Requirements", GE International Gas Turbine State of the Art Congress, May 1976, Dubrovnik, Yugoslavia.

54. "Combined Cycle Package Boosts Saarbrucken's District Heating Supply", Energy International, March 1976, P 18.

55. Zaugg, P., "Air-Storage Power Generating Plants", Brown Boveri Review, July/August 1975, P 338.

56. "Apparatus for Generation of Energy in A Gas Cycle", U. S. Patent No. 3,543,534, issued Dec. 1, 1970.

57. Ackeret, J. and Keller, C., "Aerodynamische Warmekraftmachine mit Geschlossenem Kreislauf", VDI-Z, Vol. 85, 1941, Pp 491-500.

58. Keller, C., and H. Frutschi, "Closed Cycle Plants - Conventional and Nuclear - Design, Application Operation", Sawyer's Gas Turbine Engineering Handbook, Second Edition, Vol. II, 1972, P 265.

59. "Closed Cycle Gas Turbines for All Fuels: Coal, Oil, Gas, Nuclear", Escher Wyss News, Vol. 39, no. 1, 1966.

60. Bammert, K. and G. Groschup, "Status Report on Closed Cycle Power Plants in the Federal Republic of Germany", ASME Paper No. 76-GT-54, March 1971.

61. Zenker, P., "The Oberhausen 50 MW Helium Turbine Plant", Combustion, April 1976, P 21.

62. Bammert, K., "A General Review of Closed-Cycle Gas Turbines Using Fossil, Nuclear and Solar Energy", ISBN 3-521-06101-9, Verlag Karl Thiemig, Munich, Germany, 1975.

63. Janis, J. M., G. S. Braun, and R. D. Ryan, "Performance Testing of the Compact APCSE Closed Brayton-Cycle System", ASME Paper No. 67-GT-34, March 1967.

64. Bailey, John A., F. D. Jordan and C. A. Kinney, "Status of the Army Closed Brayton-Cycle Gas Turbine Program", ASME Paper No. 67-GT-13, March 1967.

65. Deuster, G., "Long-Time Operating Experiences with Oberhausen Closed-Cycle Gas Turbine Plant", ASME Paper No. 70-GT-73, May 1970.

66. Bammert, K., F. Rurik and H. Griepentrog, "Highlights and Future Development of Closed-Cycle Gas Turbines", ASME Paper No. 74-GT-7, April 1974.

67. Spillman, W., "The Closed Cycle Gas Turbine for Non-Conventional Applications", ASME Paper No. 66-GT/CLC-8, March 1966.

68. LaFleur, J. K., "The Use of Turbomachinery in the Field of Cryogenics", Sawyers's Gas Turbine Engineering Handbook", Second Edition, Volume II, P 296.

69. Holzapfel, H., "Hot Air Turbines for Thermal Power Stations - Oberhausen (I) Power Station", Sonderdruck aus GHH - Technische Berichte, April 1964.

70. Frutschi, H. U., "Ensuring Stable Circuit Conditions of Direct Cycle Helium Gas Turbine System", ASME Paper No. 74-GT -88, March 1974.

71. Bammert, K. and R. Klein, "The Influence of He-Ne, He-N_2, and He-CO_2 Gas Mixtures on Closed-Cycle Gas Turbines", ASME Paper No. 74-GT-124, March 1974.

72. Tippets, F. E., "Relative Thermal Performance of Carbon Dioxide and Helium in Nuclear Power Cycles", ASME Paper No. 59-GTP-14, March 1959.

73. Robinson, S. T., "Influence of Working-Fluid Characteristics on the Design of the Closed Cycle Gas Turbine", ASME Paper No. 57-GT-13, March 1957.

74. Bammert, K. and G. Deuster, "Layout and Present Status of the Closed-Cycle Helium Turbine Oberhausen", ASME Paper No. 74-GT-132, March 1974.

75. Bammert, K. G. Krey and Krapp, R., "Operation and Control of the 50 MW Closed Cycle Helium Turbine Oberhausen", ASME Paper No. 74-GT-13, April 1974.

76. Keller, C. and D. Schmidt, "Industrial Closed-Cycle Gas Turbines for Conventional and Nuclear Fuel", ASME Paper No. 67-GT-10, March 1967.

77. Curwen, P. W., G. B. Manning and R. A. Harmon, "Comparison of Oil and Gas Lubrication Systems for Closed -Loop Gas-Turbine Machinery", ASME Paper No. 67-GT-3, March 1967.

78. Bammert, K. and E. Bohm, "Nuclear Power Plants with High Temperature Reactor and Helium Turbine", ASME Paper No. 69-GT-43, March 1969.

79. Keller, C. "Smaller Reactors Plus Helium Turbines Equals Near-Term Conservation", Mechanical Engineering, Sept. 1976.

80. Griepentrog, H. and P. Sackarendt, "Vaporization of LNG with Closed-Cycle Gas Turbines", ASME Paper No. 76-GT-38, March 1976.

81. Manning, G. B. and L. K. Stone, "The closed Cycle Gas Turbine and the 1985 U. S. Water Pollution Abatement Goals", ASME Paper No. 74-GT-129, March 1974.

82. Abbott, W. E., W. P. Chernock, Braun, W., and A. Martin, "PWR Practice in the United States and Europe", American Power Conference, May 8-10, 1973, Chicago, Illinois.

83. Megy, J. M. and C. P. L'Zaleski, "Phenix Power Station Experience", American Power Conference, April 20-22, 1976 Chicago, Illinois.

84. McDonald, Adams, Bell, and Fortescue, "Component Design Considerations for Gas Turbine HTGR Power Plant", ASME Paper No. 75-GT-67, March 1975.

85. Krase, J. M. and S. L. Koutz, "Direct Cycle Offers More Efficient Nuclear Systems", Energy International, April 1974, P 31.

86. Krase, J. M. and J. M. Neill, "Latest Direct Cycle Concept Aims for High Efficiency", Energy International, March 1976, P 31.

87. Forster, S., "Hochtemperaturreaktor-Einkreisanlagen In Nechtintegrierter Baweise - Eine Alternative zum Integrierten Konzept", KFA-Kolloquium 7-11-75, Institut Fur Reaktorentwicklung Kernforschungsanlage, Julich, GMBH.

88. Schoene, T. W., J. M. Neill and R. L. Cummings, "The Gas Turbine HTGR Plant with a Binary Cycle", General Atomics Report No. GA-A13819, February 5, 1976.

89. Fortescue, P., "Advanced HTGR Systems", General Atomics Report No. GA-A13375 (Revised) June 30, 1975.

90. "Technical and Economic Assessment of the Direct-Cycle Gas Cooled Reactor Plant", ERDA Report 109,UC-10, Volume 1, Sept. 1975, Prepared with the Assistance of United Engineers and Constructors, Inc., Holifield National Laboratory, NASA-Lewis Research Center.

91. Goebel, K., "Development and Design of the Siemens Gas Turbine," Siemens Review, Vol. 34, no.7, July 1967, P 245.

92. Friedrich, R., "Ein Gasturbine mit gekuhlten Schaufeln fur Gastemperaturen uber 1000°C", Sonderdruck aus Brennstoff - Kraft (BWK), Vol. 14, no.8, 1962, P 368.

93. Loft, A., "World's First Operating 100 MW Single-Shaft Gas Turbine", GE International Gas Turbine State of the Art Congress, Dubrovnik, Yugoslavia, May 1976.

94. Frigieri, G. P., J. L. Guiette, and K. W. Johnson, "Development of a 100 MW 3000 RPM Gas Turbine for Simple and Combined Cycle Power Generation", CIMAC Proceedings, April 1975, P 231 Barcelona, Spain.

95. Schmoch, O. R., "Land Gas Turbines 10-80 MW", Diesel Engineers and Users Association, London, Publication 355, Presented January, 1973.

96. Frank, H. D., "Gas Turbines for Low BTU Gas Application", Turbodyne/BBC Publication, April 1976.

97. Dibelius, N. R., M. B. Hilt and R. H. Johnson, "Reduction of Nitrogen Oxides from Gas Turbines by Steam Injection", ASME Paper No. 71-GT-58, March 1971.

98. Singh, P.P., W. E. Young, and M. J. Ambrose, "Formation and Control of Oxides of Nitrogen Emissions from Gas Turbine Combustion Systems", ASME Paper No. 72-GT-22, March 1972.

99. Hung, W. S. Y.,"Accurate Method of Predicting the Effect of Humidity or Injected Water on NOx Emissions from Industrial Gas Turbines", ASME Paper No. 74-WA/GT-6, November 1974.

100. Roy, P., A. F. Schlader and J. Odgers, "Premixed Combustion in a Baffle Combustor and the Effect of Steam Injection", ASME Paper No. 74-GT-8, March 1974.

101. Klapatch, R. D. and T. R. Kobbish, "Nitrogen Oxide Control with Water Injection in Gas Turbines", ASME Paper No. 71-WA/GT-9, November 1971.

102. Hilt, M. B. and R. H. Johnson, "Nitric Oxide Abatement in Heavy Duty Gas Turbine Combustors by Means of Aerodynamics and Water Injection", ASME Paper No. 72-GT-53, March 1972.

103. Bultzo, C., "Steam Injection, A source of Incremental Power", ASME Paper No. 69-GT-68, March 1969.

104. Heniker, T. G. and W. B. Wilson, "Evaluating Systems To Increase Gas Turbine Capability", ASME Paper No. 66-GT/CMC-65, March 1966.

105. "Gas Turbines Can Also Use Steam!", Power, August 1954, P 94.

106. Miller, B., "Gas Turbine Process Using Added Steam", ASME Paper No. 54-SA-42, June 1954.

107. Berman, P. A., "A 200 MW Steam Injection Gas Turbine", CIMAC Congress, Brussells, Belgium, 1968.

108. Smith, H. L. and R. J. Budenholzer, "Cyclic-Energy Demands Supplied Economically with Gas Turbines and Combined Cycle Plants", ASME Paper No. 71-GT-71, March 1971.

109. Kiscaden, R. W. M. M. Hobbs and K. R. Wescott, "Field Experience with the PACE Control System", ASME Paper No. 76-GT-106, March 1976.

110. Berrie, T. W., "The Economics of System Planning in Bulk Electricity Supply", Electrical Review - Sept. 29, 1967, P 11.

111. Hill, M. L. "Digital Fuel Control of Industrial Gas Turbines" ASME Paper No. 75-GT-106, March 1975.

112. Palmer, R. J. and M. R. Burgess, "Modern Gas Turbines for Low BTU Gas Fuel Operation", ASME Paper No. 76-GT-117, March 1976

113. "Purifying Heavy Fuels", Gas Turbine International, July/August, 1975, P 32.

114. Greenlee, R. W. and R. N. Lucas, "Electrical Purification of Gas Turbine Fuels", American Society for Testing and Materials Special Technical Publication No. 531, 1973.

115. Liquid Fuels Specification, Westinghouse, MS-571370.

116. Hauser, L. G. and W. L. Wright, "An Assessment of Oil Gasification Processes for Electric Utility Power Generation", American Power Conference, Chicago, Ill., May 1974.

117. Amero, R. C., R. S. Silver and S. J. Yanik, "Hydrodesulfurized Residual Oil and Gas Turbine Fuels", ASME Paper No. 75-WA/GT-8, November 1975.

118. Nilsson, N-G., "Residual Oil as Gas Turbine Fuel Aspects on Corrosion and Deposits", CIMAC Congress, 1971.

119. Carlstrom, L. A. R. H. Johnson and H. von E. Doering, "Advancements in Heavy Fuel Technology", GE International State of the Art Congress, May 1976, Dubrovnik, Yugoslavia.

120. Rittener, D. G., "Operating Experience with 3 MW Gas Turbines Running on Crude Oil", ASME Paper No. 73-GT-53, April 1973.

121. White, A. O., "20 Years Experience Burning Heavy Fuels in Heavy Duty Gas Turbines", ASME Paper No. 73-GT-22, April 1973.

122. Lee, S. Y., W. E. Young and G. Vermes, "Evaluation of Additives for Prevention of High Temperature Corrosion of Superalloys in Gas Turbines", ASME Paper No. 73-GT-1, April 1973.

123. De.Corso, S. M., R. A. Symonds and G. Vermes, "Crude Oil Firing in the Utility Gas Turbine", ASME Paper No. 71-WA/GT-11, November 1971.

124. Schiefer, R. B., "The Combustion of Heavy Distillate Fuels in Heavy Duty Gas Turbines", ASME Paper No. 71-GT-56, March 1971.

125. Vermes, G., "Heavy Oil or Residual Oil - New Opportunity for the Utility Gas Turbine", ASME Paper No. 71-GT-81, March 1971.

126. Lay, K. W., "Ash in Gas Turbines Burning Magnesium - Treated Residual Fuel", ASME Paper No. 73-WA/CD-3, November 1973.

127. Schmoch, O., "Large Single-Shaft Gas Turbines in the Public Electric Supply System", (Translation from: MTZ Motortechnische Zeitschrift, Vol. 31, no. 5, 1970, P 198-203.)

128. "Florida Power Tests Methanol Fuel", Gas Turbine World News, April 30, 1975, P 7.

129. Uecker, E. C. and E. A. Tillson, "Advanced Maintenance Planning Applied to Large Steam Turbine-Generators", American Power Conference, Chicago, Illinois, April 1974.

130. Nichols, W. H. and R. H. Witt, "Effect of Maintenance on Gas Turbine Reliability", ASME Paper No. 76-GT-68, March 1976.

131. Hartmann, M., R. Robben and P. Hoppe, "Inspection, Maintenance and Field Repair of Heavy Duty Industrial Gas Turbines", ASME Paper No. 74-GT-147, March 1974.

132. Fougere, L. F., "Training of Industrial Power Plant Personnel Suggested Program", ASME Paper No. 74-GT-22, March 1974.

133. Dunaiski, R. M., M. A. Freeman and G. R. Kennedy, "Gas Turbine Internal Inspection with Minimum Disassembly", ASME Paper No. 74-GT-15.

134. Cigal, A. L., "Do It Yourself Maintenance - An On-Site Approach to Lower Costs and Improved Equipment Availability", ASME Paper No. 76-GT-108, March 1976.

135. Shatoff, J., "Using Vibration Analysis To Determine the Dynamic Health of Turbine/Generators", Power, Vol. 120, No. 5 May 1976, P 23.

136. Urban, L. A., "Parameter Selection for Multiple Fault Diagnostics of Gas Turbine Engines", ASME Paper No. 74-GT-62, March 1974.

137. "The Breeder's Biggest Backer", Business Week, August 16, 1976, P 143.

138. Page, R. W. and D. T. Read, (Burns and Roe, London, England), "High Temperature Gas Cooled Reactor Development Outside the United States - A Consultants View", American Power Conference, Chicago, Ill., March 1973.

139. "General Electric Conducting Gas Turbine Tests on Methanol Fuel", Gas Turbine World News, March 31, 1976, P 7.

140. Klapatch, R. D., "Gas Turbine Emissions and Performance on Methanol Fuel", ASME Paper No. 75-Pwr-22, Sept. 1975.

141. Aguet, E. and J. V. Sales, "Three Years' Operating Experience with 7500 KW Gas-Turbine Plants in Belgian Steelworks", ASME Paper No. 60-GTP-3, March 1960.

142. Strubb, R. A., "Further Progress and Industrial Experience With Sulzer Gas Turbines", CIMAC Congress, Brussels, Belgium, 1968.

143. Bammert, K. and H. Sandstede, "Gas Turbines Burning Dirty Fuels", ASME Paper No. 76-GT-66, March 1976.

144. Strubb, R. A., "Field Experience With Industrial Gas Turbine Installations", Sulzer Technical Review, March 1966, P 129.

APPENDIX A

Organizations Contacted

Code: V - Visit
C/T - Correspondance/Telephone

Organization	Code	Personnel Involved
AEG-Kanis, Nurenberg, Germany	C/T	P. A. Becker
Alsthom, Belfort, France	V	Arne Loft, Manager Frank Stevens, Engineer Service Commercial Gas Turbines
Babcock, Fives Cail Paris France	V	P. H. Pacault Consulting Engineer
Brown Boveri Corp. Baden, Switzerland	V	F. M. Wehaiba, Marketing & Export Dr. P. C. Felix, Advanced Fuels and Materials Wilhelm Haas, Advanced Cycles Dr. Endres, Manager Gas Turbine Engineering Dept.
Central Electricity Generating Board Gloucester, England	V	Bernard J. Beecher, Charge of Gas Turbines, Generation Development & Construction Division
Curtiss Wright Corp. Wood Ridge, NJ	C/T	Sylvester Lombardo, Director of Engineering
Electricite de France Paris, France	V	Paul Blanc-Feraud, Chief, Machinery Dept. Research Division
EVO, Oberhausen, Germany	V	Dr. Peter Zenker, Director
Fiat, Torino, Italy	C/T	Dr. Alfredo Congiu, Manager Engineering & Testing Dept.
GEC. Ltd., Leicester, England	V	Dr. W. Rizk, Managing Director W. J. Tolcher, Asst. Managing Director D. Brown, Engineering Manager
General Electric Cincinnati, Ohio	C/T	Robert Olson, Market Research
General Electric Schenectady, NY	V	E. P. Smith, Manager World Region I, International Program Planning C. J. Burke
GHH, Oberhausen, Germany	V	Dr. Hartmut Griepentrog, Director Dr. Krey, Gas Turbines and Unconventional Machines

Organization	Code	Personnel Involved
Kraftwerk Union Berlin, Germany	V	Karl Heinz Lange, Manager Gas Turbine & Service Divisions K. Goebel, Tech. Marketing
Rolls Royce Ansty, England	V	Manfred Stratemeier, Market Manager, Electrical Power Generation J. H. Shorland, Technical Sales Support J. R. Kelly, Application Engineering
Stal Laval Finspong, Sweden	C/T	Dr. Erik Olsson, Dept. GB Kjell Thoren, Design Dept.
Sulzer Brothers Winterthur, Switzerland	V	A. Frieder, Assistant Engineering Manager
Turbodyne St. Cloud, Minn.	C/T	R. J. Palmer Director of Marketing
United Technologies, Inc. Farmington, Conn.	C/T	John H. Lewis, Advanced Products Engineering, Power Systems Div.
Westinghouse Electric Corp. Lester, PA	C/T	Clifford E. Seglem, Manager Technical Liaison, Long Range Development

☆U.S. GOVERNMENT PRINTING OFFICE: 1977 -740 -306/ 219 REGION NO. 4