Preliminary Assessment of Alternative PFBC Power Plant Systems

CS-1451
Research Project 1645-2

Final Report, July 1980

Prepared by

BURNS AND ROE, INC.
185 Crossways Park Drive
Woodbury, New York 11797

Principal Investigators
J. Wysocki
R. Rogali

Project Manager
G. Marchmont

Prepared for

Electric Power Research Institute
3412 Hillview Avenue
Palo Alto, California 94304

EPRI Project Manager
W. Slaughter

Fluidized Combustion and Coal Cleaning Program
Coal Combustion Systems Division

DISTRIBUTION OF THIS DOCUMENT IS UNLIMITED

DISCLAIMER

This report was prepared as an account of work sponsored by an agency of the United States Government. Neither the United States Government nor any agency thereof, nor any of their employees, makes any warranty, express or implied, or assumes any legal liability or responsibility for the accuracy, completeness, or usefulness of any information, apparatus, product, or process disclosed, or represents that its use would not infringe privately owned rights. Reference herein to any specific commercial product, process, or service by trade name, trademark, manufacturer, or otherwise does not necessarily constitute or imply its endorsement, recommendation, or favoring by the United States Government or any agency thereof. The views and opinions of authors expressed herein do not necessarily state or reflect those of the United States Government or any agency thereof.

DISCLAIMER

Portions of this document may be illegible in electronic image products. Images are produced from the best available original document.

ORDERING INFORMATION

Requests for copies of this report should be directed to Research Reports Center (RRC), Box 50490, Palo Alto, CA 94303, (415) 965-4081. There is no charge for reports requested by EPRI member utilities and affiliates, contributing nonmembers, U.S. utility associations, U.S. government agencies (federal, state, and local), media, and foreign organizations with which EPRI has an information exchange agreement. On request, RRC will send a catalog of EPRI reports.

[redacted]

EPRI authorizes the reproduction and distribution of all or any portion of this report and the preparation of any derivative work based on this report, in each case on the condition that any such reproduction, distribution, and preparation shall acknowledge this report and EPRI as the source.

NOTICE

This report was prepared by the organization(s) named below as an account of work sponsored by the Electric Power Research Institute, Inc. (EPRI). Neither EPRI, members of EPRI, the organization(s) named below, nor any person acting on their behalf: (a) makes any warranty or representation, express or implied, with respect to the accuracy, completeness, or usefulness of the information contained in this report, or that the use of any information, apparatus, method, or process disclosed in this report may not infringe privately owned rights; or (b) assumes any liabilities with respect to the use of, or for damages resulting from the use of, any information, apparatus, method, or process disclosed in this report.

Prepared by
Burns and Roe, Inc.
Woodbury, New York

ABSTRACT

This report presents the design and economic comparisons of the following nominal 1000 MWe PFBC power plants for both eastern and western coal:

- Curtiss-Wright PFBC power plants with an air-cooled design
- General Electric PFBC power plants with a steam-cooled design
- AEP/Stal-Laval PFBC power plants with a steam-cooled design.

In addition, reference pulverized coal-fired (PCF) power plants are included for comparison purposes.

The results of the analysis indicate:

- The steam-cooled PFBC designs show potential savings of 10% and 11% over PCF plants for eastern and western coal, respectively, in terms of busbar power cost.
- The air-cooled PFBC designs show potential savings of 1% and 2% over PCF plants for eastern and western coal, respectively, in terms of busbar power cost.

EPRI PERSPECTIVE

PROJECT DESCRIPTION

This report is the second in a series of evaluations of the design and economics of commercial scale coal-fired plants using fluidized-bed combustion (FBC) boilers. While the initial report (EPRI Report FP-1173) focuses on a lignite-fired atmospheric fluidized-bed combustion (AFBC) power plant, this project examines the preliminary economics of pressurized fluidized-bed combustion (PFBC) power plants. PFBC is currently of interest to the utilities as a potential method of more efficiently utilizing coal while meeting future emission requirements and reducing water consumption. While several developmental issues remain before this advanced technology is considered commercially available, EPRI has found that economic studies of this type are useful in identifying potential markets and in guiding research and development to resolve areas of uncertainty.

The methodology utilized for this preliminary evaluation is described in the EPRI Technical Assessment Guide (PS-1201-SR, July 1979). Cost details for the plant components were provided by three PFBC process developers--Curtiss-Wright (DOE funding), General Electric (DOE funding) and Stal-Laval/American Electric Power (private funding). Burns & Roe was selected as the architect/engineer to analyze this data on a common basis in comparison with a conventional pulverized coal power plant with an SO_2 scrubber. Separate cases were calculated using both eastern and western coals.

PROJECT OBJECTIVE

The primary objective of this project was to develop preliminary cost data for PFBC systems utilizing methodology of the EPRI Technical Assessment Guide to facilitate comparison of PFBC with other advanced technologies. Also of importance was the

identification of cost-sensitive sections of the individual plant designs to help guide future research and development in this technology area.

PROJECT RESULTS

These preliminary cost estimates indicate that PFBC power plants have the potential to reduce busbar power costs up to 11% over the reference conventional pulverized coal plant. Approximately half of this differential (2 to 3 mills/kWh) represents lower fuel costs due to increased power plant efficiency.

Utilizing three separate sources for the PFBC cost data provided a range of data for comparison to the conventional coal plant. Although the information provided by Curtiss-Wright, General Electric, and AEP/Stal-Laval represent the best currently available data, it must be emphasized that direct comparison of this level of preliminary data on the three PFBC plants is not possible due to differing design philosophies. More rigorous economic analysis does not seem appropriate until additional information from ongoing test work more closely defines the final plant configurations. Of particular importance to the overall plant costs will be the final selection of a gas cleanup system which meets turbine reliability requirements and environmental regulations, and also the final specification of materials and configuration for the combustor heat transfer surfaces.

W. W. Slaughter, Project Manager
Fluidized Combustion and Coal Cleaning Program
Coal Combustion Systems Division

CONTENTS

Section		Page
1	INTRODUCTION AND SUMMARY	1-1
	Background	1-1
	Objective	1-2
	Scope of Work	1-2
	Approach	1-2
2	SUMMARY OF RESULTS	2-1
	Eastern Coal Results	2-1
	Western Coal Results	2-1
	Conclusions	2-4
	Steam/Gas Turbine Contributions	2-5
	PFBC Operating Pressures	2-7
	PFB Combustor Sizes and Configuration	2-7
	Steam Conditions	2-7
	Condenser Back Pressure	2-8
	Fluid Bed Operating Temperatures	2-8
	Plant Electrical Output	2-8
3	DESIGN AND ECONOMIC CRITERIA	3-1
	Design Criteria	3-1
	Plant Location	3-1
	Plant Size	3-1
	Steam Conditions	3-1
	Plant Life	3-1
	Plant Construction Startup and Completion	3-1
	Other Plant Factors	3-2
	Coal Sources and Analyses	3-2
	Limestone and Dolomite Analyses	3-2
	Environmental Standards	3-2

CONTENTS Continued

Section		Page
(3)	DESIGN AND ECONOMIC CRITERIA Continued	
	Economic Criteria	3-1
	Total Plant Investment	3-2
	Total Capital Requirements	3-6
	Operating Costs	3-7
	Product Cost Basis	3-8
4	CURTISS-WRIGHT PFBC POWER PLANT	4-1
	System Design	4-1
	Evaluation Parameters and Results	4-1
	As-Reported C-W Base Case Analysis	4-5
	EPRI Nominal 1000 MW PFBC Eastern Coal Plant	4-10
	EPRI Nominal 1000 MW PFBC Western Coal Plant	4-16
	Conclusions	4-20
5	GENERAL ELECTRIC PFBC POWER PLANT	5-1
	System Design	5-1
	Evaluation Parameters and Results	5-1
	As-Reported GE Base Case Analysis	5-4
	EPRI Nominal 1360 MW PFBC Eastern Coal Plant	5-10
	EPRI Nominal 1360 MW PFBC Western Coal Plant	5-15
	Conclusions	5-15
6	AEP/STAL-LAVAL POWER PLANT	6-1
	System Design	6-1
	Evaluation Parameters	6-1
	As-Reported AEP/S-L Base Case Analysis	6-4
	EPRI Nominal 1000 MW PFBC Eastern Coal Plant	6-9
	EPRI Nominal 1000 MW PFBC Western Coal Plant	6-13
	Conclusion	6-13

CONTENTS Continued

Section		Page
7	REFERENCE PCF PLANTS WITH WET FGD SYSTEMS	7-1
	Site Description	7-1
	Boiler Description	7-1
	Steam Generator	7-7
	Fuel Feed System	7-7
	Air and Gas Handling System	7-7
	Ash Handling System	7-7
	Solid Waste Disposal	7-8
	PCF Mass and Energy Balance	7-8
	Flue Gas Desulfurization (FGD)	7-9
	Plant Auxiliary Power Requirements	7-11
	Economic Analyses	7-11
8	REFERENCES	8-1

ILLUSTRATIONS

Figure		Page
2-1	500 MW PFB Modular Commercial Plant Turn Down Capability	2-10
4-1	Flow Schematic Curtiss-Wright PFBC Power Plant Nominal 484 MW Output	4-2
4-2	484 MW Plant Arrangement	4-3
5-1	Flow Schematic General Electric PFBC Power Plant Nominal 678 MW Output	5-2
5-2	Plot Plan Coal-Fired Combined Cycle	5-3
6-1	Flow Schematic AEP/STAL-Laval PFBC Power Plant Nominal 512 MW Output	6-2
7-1	Site Plan for 1000 MW PCF/FGD Power Plant	7-3
7-2	Plant Island Arrangement for 1000 MW PCF/FGD Power Plant	7-5
7-3	FGD Limestone Slurry Process Diagram	7-10

TABLES

Table		Page
2-1	Comparison of Alternative Eastern PFBC Power Plant Systems	2-2
2-2	Comparison of Alternative Western PFBC Power Plant Systems	2-3
2-3	As-Reported PFBC Plant Operating and Design Parameters	2-6
3-1	Coal Analyses	3-3
3-2	Design Limestone and Dolomite Analyses	3-4
4-1	Economic Factors	4-4
4-2	Coal and Dolomite Analyses	4-6
4-3	Curtiss-Wright PFBC Plant Economic Analyses Summary	4-7
4-4	Curtiss-Wright PFBC Plant Total Capital Requirements	4-8
4-5	Curtiss-Wright PFBC Plant Operating Costs	4-9
4-6	Estimated Auxiliary Loads	4-11
4-7	C-W As-Reported Costs	4-12
4-8	Modifications to C-W Base Plant Costs	4-13
4-9	Nominal 1000 MW Plant Costs - Eastern Coal	4-15
4-10	Adjustments to Nominal 1000 MW Plant Costs for Use of 1x400 MW Steam Turbine - Eastern Coal	4-17
4-11	Basis for Process Contingency Applied to Advanced Technology Equipment	4-18
4-12	Nominal 1000 MW Plant Costs - Western Coal	4-19
4-13	Adjustments to Nominal 1000 MW Plant Costs for Use of 1x400 MW Steam Turbine - Western Coal	4-21
5-1	Economic Factors	5-5
5-2	Coal and Dolomite Analyses	5-6
5-3	GE PFBC Plant Economic Analyses Summary	5-7
5-4	GE PFBC Plant Total Capital Requirements	5-8
5-5	GE PFBC Plant Plant Operating Costs	5-9
5-6	Estimated Auxiliary Loads	5-11
5-7	Adjustments to GE Costs for Labor Rate Change and Capacity Increase	5-13

TABLES Continued

Table		Page
5-8	Adjustments to 1360 MW Base Plant Costs for Different Eastern Coal Analysis	5-14
5-9	Adjustments to 1360 MW Base Plant Costs for Western Coal Analysis	5-16
6-1	Economic Factors	6-3
6-2	Coal and Dolomite Analyses	6-5
6-3	AEP PFBC Plant Economic Analyses Summary	6-6
6-4	AEP PFBC Plant Total Capital Requirements	6-7
6-5	AEP PFBC Plant Operating Costs	6-8
6-6	Adjustments to AEP Costs for Capacity Increase, Base Year and Labor Rates	6-11
6-7	Adjustments to 1000 MW Base Plant Cost for Different Eastern Coal Analyses	6-12
6-8	Adjustments to 1000 MW Base Plant Cost for Western Coal Analysis	6-14
7-1	ESP and Scrubber Design Data	7-12
7-2	Characteristics of Selected FGD Systems for Eastern and Western PCF Plants	7-13
7-3	Auxiliary Power Requirements for 1000 MWe Eastern and Western PCF Plants	7-14
7-4	Summary of PCF Plant Performances at Maximum Guaranteed Turbine Output	7-15
7-5	Capital Costs for PCF Plants	7-16
7-6	Total Capital Requirements for PCF Plants	7-17
7-7	Capital Investment and Revenue Requirements for PCF Plants	7-19
7-8	Preproduction Costs for a 1000 MWe Eastern PCF Plant	7-20
7-9	Preproduction Costs for a 1000 MWe Western PCF Plant	7-21
7-10	Estimate of Annual Operation and Maintenance Labor Costs for Eastern and Western PCF Plants	7-22
7-11	Water Consumption Analysis for 1000 MWe Eastern and Western PCF Plants	7-23
7-12	Inventory Capital	7-24
7-13	Allowance for Funds During Construction for PCF Units	7-25
7-14	Operating Cost Breakdown for 1000 MWe Eastern and Western PCF Plants	7-26

Section 1

INTRODUCTION AND SUMMARY

BACKGROUND

The development of pressurized fluidized bed combustion (PFBC) technology is being pursued primarily by gas turbine and boiler manufacturers, generally under the sponsorship of institutional organizations such as the Department of Energy (DOE), EPRI, the Environmental Protection Administration (EPA) and the International Energy Agency (IEA). The component designs developed by the manufacturers are being tested in their own laboratory facilities and the institutionally sponsored facilities at Leatherhead in England, the Exxon Miniplant in Linden, New Jersey, and in the near future at the IEA site at Grimethorpe, England.

The Energy Conversion Alternatives Study (ECAS) sponsored by the DOE indicated that the PFBC power plant is worthy of further investigation due to its apparent competitiveness with the conventional coal-fired plant in both capital costs and cost of electricity. The proponents of PFBC technology have essentially split into two camps: those favoring the air heater concept with steam bottoming, using a waste heat recovery boiler; and those favoring the steam boiler concept.

Curtiss-Wright is a proponent of the air cycle and in 1976 was awarded a contract by DOE to design and construct a pilot plant. This plant is sized to generate approximately 7 MW electrical and 6 MW equivalent steam production and is scheduled for operation in early 1981. General Electric supports the steam boiler concept and is currently under contract to DOE in developing its Coal-Fired Combined Cycle (CFCC) design. The GE schedule plans the initial operation of a single module demonstration plant in 1984. American Electric Power Service Corp. (AEP) is currently involved in a joint venture with Stal-Laval to design and build a PFBC plant based on the steam boiler concept. This project will be retrofitted to a deactivated AEP system power plant and will

have an ultimate capacity of 170 MW. Representing the first commitment of direct participation by a utility, this plant is scheduled for initial operation in early 1984.

OBJECTIVE

The objective of this work is to develop an economic evaluation of several alternative PFBC power plant designs. In addition, a comparative evaluation is made between the PFBC plants and a conventional pulverized coal-fired (PCF) plant with wet flue gas desulfurization (FGD) SO_2 removal.

SCOPE OF WORK

The scope of work of this program is to derive screening estimates for the 1000 MW nominal gross output power plant designs listed below, for both eastern and western coal applications:

- PFBC power plants with an air-cooled design similar to the Curtiss-Wright proposed commercial design
- PFBC power plants with a steam-cooled design similar to the General Electric and AEP/Stal-Laval proposed commercial designs
- Reference PCF power plants with wet FGD SO_2 removal.

The results of the economic evaluation include estimates of total plant capital and total invested capital for each plant in mid-1978 dollars and estimates of total busbar power cost on a 30 year levelized cost basis. The designs are based on the June 1979 proposed New Source Performance Standards (NSPS) for SO_2, NO_x and particulates (1). Economic and design assumptions are based on th EPRI Technical Assessment Guide (2) and the EPRI Economic Premises for Electric Power Generating Plants (3).

APPROACH

As noted previously, PFBC technology is being pursued in two basic concepts; air-cooled and steam-cooled combustors. Variations on these two concepts have been studied, such as introducing PFBC reheat for a second gas turbine expansion cycle, using the gas turbine exhaust to support combustion in an AFBC which generates the steam, and the use of an adiabatic PFBC combustor.

It was mutually agreed between EPRI and Burns and Roe that it would be appropriate to review those systems which are approaching the demonstration stage and have undergone considerable review already. Such systems would also have sufficient costing and performance data available to support the evaluation effort. Thus it was decided to evaluate:

- Curtiss-Wright's Commercial Plant Conceptual Design
- General Electric's Coal-Fired Combined Cycle Plant Design
- AEP/Stal-Laval 170 MW Pressurized Fluidized Bed Combustion Electric Plant.

Section 2

SUMMARY OF RESULTS

EASTERN COAL RESULTS

A comparison of the capital and busbar power costs for the alternative PFBC power plant systems operating on EPRI eastern coal is presented in Table 2-1, together with the costs associated with the reference PCF plant. Each PFBC plant is designed to operate with a Ca/S molar ratio of 1.5 in order to achieve 90% SO_2 removal. The analyses indicate the following costs:

	Total Capital Requirement $/kW	Levelized Busbar Power Cost mills/kWh
Curtiss-Wright	782	49.6
General Electric	669	46.2
AEP/Stal-Laval	644	45.5
Reference PCF Plant	734	50.3

WESTERN COAL RESULTS

The costs for the alternative PFBC power plant systems operating on EPRI western coal are presented in a similar fashion on Table 2-2. Each PFBC plant is designed to operate with Ca/S molar ratio of 0.8 in order to achieve 70% SO_2 removal. The analyses indicate the following costs:

	Total Capital Requirement $/kW	Levelized Busbar Power Cost mills/kWh
Curtiss-Wright	773	44.1
General Electric	639	40.1
AEP/Stal-Laval	632	40.1
Reference PCF Plant	706	45.1

Table 2-1

COMPARISON OF ALTERNATIVE EASTERN
PFBC POWER PLANT SYSTEMS*

	C-W DESIGN BASED 1000 MW PLANT	GE DESIGN BASED 1300 MW PLANT	AEP/S-L DESIGN BASED 1000 MW PLANT	PCF REFERENCE 1000 MW PLANT
PLANT PERFORMANCE DATA				
Steam Turbine Gross Output, MW	390.8	1,049.0	739.2	1,136.4
Gas Turbine Gross Output, MW	578.8	308.4	284.8	-
Plant Gross Output, MW	969.6	1,357.4	1,024.0	1,136.4
Auxiliary Load, MW	28.1	41.2	28.9	64.4
Plant Net Output, MW	941.5	1,316.2	995.1	1,072.1
Net Plant Heat Rate, Btu/kWh	8,758	8,467	8,640	9,741
SO_2 Emission Reduction, %	90	90	90	90
Ca/S Molar Ratio	1.5	1.5	1.5	1.02
MATERIALS CONSUMPTION/PRODUCTION				
Coal, t/h/1000 MW	433.6	419.2	427.7	482.2
Dolomite, t/h/1000 MW	152.6	144.7	148.7	-
Limestone, t/h/1000 MW	-	-	-	62.1
Dry Solids, t/h/1000 MW	186.0	183.9	182.5	77.3
Wet Sludge, t/h as dry solids/1000 MW	-	-	-	80.6
Water Consumption, gpm/1000 MW	3,186	8,205	8,432	12,126
COSTS (Mid-1978 dollars)				
Process Capital, $/kW net	521	448	431	476
Total Plant Investment, $/kW net	671	566	551	605
Total Capital Requirement, $/kW net	782	669	644	734
30-YEAR LEVELIZED COSTS (1979-2008)				
Dolomite, mills/kWh	2.88	2.73	2.81	1.17
Waste Disposal, mills/kWh	1.40	1.39	1.38	2.53
Water, mills/kWh	0.14	0.37	0.29	0.55
Other Consumables, mills/kWh	0.28	0.28	0.28	0.28
Total Variable O&M, mills/kWh	4.71	4.77	4.76	4.54
Fixed O&M, mills/kWh	3.61	4.03	3.73	3.88
Fixed Charges, mills/kWh	22.95	19.63	18.91	21.54
Subtotal, mills/kWh	31.26	28.43	27.39	29.95
Fuel Cost, mills/kWh	18.34	17.73	18.09	20.40
Busbar Power Cost, mills/kWh	49.60	46.16	45.49	50.35

*Based on preliminary design and cost data

Table 2-2

COMPARISON OF ALTERNATIVE WESTERN
PFBC POWER PLANT SYSTEMS*

	C-W DESIGN BASED 1000 MW PLANT	GE DESIGN BASED 1300 MW PLANT	AEP/S-L DESIGN BASED 1000 MW PLANT	PCF REFERENCE 1000 MW PLANT
PLANT PERFORMANCE DATA				
Steam Turbine Gross Output, MW	390.8	1,049.0	739.2	1,136.4
Gas Turbine Gross Output, MW	578.8	308.4	284.8	-
Plant Gross Output, MW	969.6	1,357.4	1,024.0	1,136.4
Auxiliary Load, MW	27.2	40.8	28.2	59.27
Plant Net Output, MW	942.4	1,316.6	995.8	1,077.16
Net Plant Heat Rate, Btu/kWh	8,749	8,339	8,634	9,694
SO_2 Emission Reduction, %	70	70	70	70
Ca/S Molar Ratio	0.8	0.8	0.8	1.3
MATERIALS CONSUMPTION/PRODUCTION				
Coal, t/h/1000 MW	545.4	520.2	538.3	604.36
Dolomite, t/h/1000 MW	12.1	11.5	12.0	-
Limestone, t/h/1000 MW	-	-	-	10.14
Dry Solids, t/h/1000 MW	45.5	45.7	44.7	38.66
Wet Sludge, t/h as dry solids/1000 MW	-	-	-	13.26
Water Consumption, gpm/1000 MW	3,183	8,203	8,435	12,147
COSTS (Mid-1978 dollars)				
Process Capital, $/kW net	517	430	424	461
Total Plant Investment, $/kW net	667	550	543	584
Total Capital Requirement, $/kW net	773	639	632	706
30-YEAR LEVELIZED COSTS (1979-2008)				
Dolomite, mills/kWh	0.23	0.22	0.23	0.19
Waste Disposal, mills/kWh	0.34	0.34	0.34	0.83
Water, mills/kWh	0.14	0.37	0.29	0.55
Other Consumables, mills/kWh	0.28	0.28	0.28	0.28
Total Variable O&M, mills/kWh	0.99	1.22	1.14	1.85
Fixed O&M, mills/kWh	3.60	4.03	3.73	3.86
Fixed Charges, mills/kWh	22.70	18.75	18.55	20.71
Subtotal, mills/kWh	27.29	24.00	23.41	26.42
Fuel Cost, mills/kWh	16.85	16.07	16.63	18.68
Busbar Power Cost, mills/kWh	44.14	40.07	40.05	45.10

*Based on preliminary design and cost data

CONCLUSIONS

The costs for each nominal 500 MW commercial plant design were taken from the applicable referenced documents supplied by the design contractors (see Section 8, References). These costs were adjusted, as described in this report, to account for increasing the power output, consistency in labor rates, change in coal analyses and, as necessary, change in base cost year. The direct construction costs thus derived were then evaluated using the EPRI procedures as described in Section 3.

The operating and maintenance costs were also derived from the information supplied in the referenced documentation. No attempt was made to modify these costs for consistency on the bases of design complexity or number of components. However, it would be expected that the design with the largest number of components would have the highest O&M cost. This is not apparent in this report as the C-W design, with the greatest number of components, has the lowest O&M cost. The impact on the indicated C-W O&M costs would be to increase the levelized fixed O&M charges by 0.1 to 0.2 mills/kWh for each additional O&M personnel required.

The assessment has shown that for all plants analyzed the busbar power costs are within a 10% spread for the eastern coal cases and an 11% spread for the western coal cases, with the PCF plant being the most expensive in both instances. The spread for total capital requirement is 18% for both eastern and western coal cases, with the C-W plant design showing the highest costs.

A review of the FPC account cost breakdown shows that, on a unit cost basis, the C-W Account 312 is approximately 30% more expensive than the other two PFBC designs. Other accounts show little difference except that GE's Account 314 is the highest. This is to be expected since the majority of the power output in the GE design is from the steam cycle, which is supercritical. The contribution of Account 312 to the total direct construction cost is significant, being 60% for C-W, 46% for GE and 51% for AEP. The costs applied to this account include the PFBC hot gas ducting and clean-up system. The relatively high cost of the C-W design plant can be attributed primarily to this account and appears to be the result of two factors:

- The extent of modularization
- The selection of an air cooled PFBC.

The modularization selected by C-W resulted in a PFB combustor of approximately 205 MWt. By comparison, GE's design has a 590 MWt PFBC and AEP has a 650 MWt PFBC. Thus, it may be argued that both GE and AEP have taken advantage of the cost savings that can be realized by scaling. For example, for C-W to provide the same thermal rating as GE would require three PFBC's at three times the cost compared with 1.8 times the cost if the combustor could be scaled. This demonstrates the significant benefits of being able to scale and, conversely, the cost penalty inherent with the multi-modular design.

The selection of the air-cooled PFBC design by C-W also contributes to its greater cost. The C-W design cools the fluidized bed by passing two-thirds of the compressor discharge air through finned tubes in the bed. GE and AEP cool the bed by generating steam in tubes in the bed. For the same heat transfer rate the use of air as the cooling medium will require approximately ten times more surface than if cooling is accomplished by steam generation. Thus, on an equivalent thermal basis, the air cooled PFBC would be more expensive due to the greater heat transfer surface required and, possibly, the greater size of the PFBC to accommodate the additional surface.

Table 2-3 has been prepared to present a comparison of the design and operating parameters of the three concepts reviewed. The following design differences are notable as they impact either the plant costs or performance.

Steam/Gas Turbine Contributions

The steam/gas turbine power contributions to the respective PFBC plant designs are: C-W - 40%/60%; GE - 77%/23%; AEP - 72%/28%. The difference in power split between the C-W and the other two PFBC designs is to be expected as the C-W design emphasizes the air cycle. The gas turbines commercially available to operate in conjunction with a PFB combustor are limited in mass flow capability. For those in the 60-70 MW range a mass flow of between 600 and 700 lb/sec is normal. Stal-Laval's GT-120 is an exception to this with a design mass flow of

Table 2-3

AS-REPORTED PFBC PLANT
OPERATING AND DESIGN PARAMETERS

	Curtiss-Wright	General Electric	AEP/STAL-Laval
POWER OUTPUT			
Gross Output, MW	484	679	512
Gross Steam Turbine Output, MW	195	525	370
Gross Gas Turbine Output, MW	289	154	142
PFBC			
Number	6	3	2
Type	A-C, Cylindrical, 1-bed	S-C, Cylindrical, 2 beds horizontal	S-C, Spherical, 1-bed anular
Total Air Flow, lb/hx10^6	12.9	4.8	5.8
Air Inlet Temperature, ^oF	506	587	350
Air Outlet Temperature, ^oF	1650	1700	1472
PFBC Operating Pressure, psig	85	145	223
Bed Depth, ft	16		12
Bed Temperature, ^oF	1650	1750	1550
Combustor Size	28' Dia. x 76' H	36' Dia. x 102' L	57 Dia. Sphere
Hot Gas Clean-up Type	2-Stages of Cyclone	3-Stages of Cyclone	3-Stages of Cyclone
Superficial Velocity, ft/sec	2.7	4.6-4.8	3
GAS TURBINE			
Number	3	3	2
Type	Double Ended-GEC EM610	Single Shaft-GE Frame 7	3-Shaft, S-L GT120
Compressor Pressure Ratio	7	11.5	LP-4, HP-4
Total Compressor Air Inlet Flow, lb/hx10^6	13.5	5.6	-
Compressor Outlet Temperature, ^oF	506	587	350
Turbine Inlet Conditions, psig/^oF	78.5/1600	140/1664	220/1470
Turbine Outlet Temperature	906	853	630
Exhaust Gas Waste Heat Recovery	HP & LP Steam Generation	Feedwater Heating	LP & HP Feedwater Heating
STEAM CYCLE			
Main Steam Flow, lb/hx10^6	1.3 (HP Steam)	3.3	2.1
Main Steam Conditions, psig/^oF	835/800 (HP Steam)	3500/1000	2600/1000
Reheat Steam Flow, lb/hx10^6	0.32 (LP Steam)	2.8	2.1
Reheat Steam Conditions, psig/^oF	168/700 (LP Steam)	607/1000	614/1000
Condenser Pressure, ins Hg Abs	2	2.5	1.0
Feedwater Heating Stages	1-Deaerator	3-LP, 3-HP, D/A & Exhaust Gases	1-Deaerator, Inter-cooler & Exhaust Gases
EMISSIONS			
Total Stack Gas Flow, lb/hx10^6	13.5	5.99	5.59
Stack Gas Temperature, ^oF	275	275	325
Sulfur Removal, %	90	85	90
Particulate, lb/10^6 Btu	0.1	0.025	0.03
NO_x, lb/10^6 Btu	0.21	0.2	0.6

about 800 lb/sec. Nevertheless, it is evident that as this mass flow rate must be matched by the PFB combustor design, the result is the multi-module approach used by C-W in order to achieve 60% of the electric power from gas turbines.

PFBC Operating Pressures

The PFBC operating pressures, which are dependent upon the gas turbine selected and its compression ratio, are: C-W - 85 psig; GE - 145 psig; AEP - 223 psig. The selection of an optimum operating pressure would require a detailed evaluation to determine the relative merits of performance and cost. Increasing the operating pressure does not affect SO_2 removal when using dolomite but does reduce the flue gas volumetric flow. This, in turn, reduces the size of the hot gas system, but may have an adverse effect on the cyclone efficiency. The higher pressures also increase the cost of the hot gas system components including the PFB combustor.

PFB Combustor Sizes and Configuration

The respective PFB combustor sizes reflect, in part, the operating parameters and the relative costs of FPC Account 312. A comparison of sizes reveals that the GE PFBC is about twice as large as the C-W PFBC, but has a thermal rating almost triple that of the C-W PFBC. Without an indepth study of both designs, it would be premature to claim that this difference is due solely to the selection of an air-cooled design by C-W. It does, however, highlight an area where significant cost differentials exist. It is difficult to compare the C-W and GE design, both cylindrical, with that of AEP as it is spherical and houses the hot gas clean-up system as well as the annular fluidized bed.

Steam Conditions

Each design is based upon a different selection of steam conditions. C-W chose a dual pressure system (835 psig/800F and 168 psig/700F) as the steam for its design is raised in a waste heat boiler recovering energy from the gas turbine exhaust at 906F. GE and AEP can use higher steam pressures/temperatures as the steam is raised using the fluid bed heat at 1750F and 1550F, respectively. GE has used a supercritical steam cycle thereby optimizing the steam cycle efficiency.

Condenser Back Pressure

The reference PCF plant and the GE PFBC plant design are based upon a condenser back pressure of 2.5 ins Hg; C-W's performance is based upon 2.0 ins Hg and AEP's upon 1.0 in Hg. It is generally appropriate to levelize the steam cycle performance to a specific condenser back pressure such as 2.5 ins Hg. Such adjustments to the C-W and AEP designs have not been made in this assessment, but if incorporated would result in decreases in plant net output of approximately 2 MW for C-W and 24 MW for AEP. This would result in increases in unit cost of $1.5/kW for C-W and $15/kW for AEP and increases in busbar power cost of 0.05 mills/kWh for C-W and 0.4 mills/kWh for AEP.

Fluid Bed Operating Temperatures

No attempt has been made to levelize the performance based upon a common bed temperature. It can be argued, therefore, that GE, with the highest bed temperature, has an unfair advantage. This may be true when comparing the GE and AEP designs. However, in comparison with the C-W design, the air-cooled tubes are expected to operate at higher metal temperatures due to the heat transfer characteristics of air, thus it may be necessary to run the bed at a lower temperature than a steam cooled PFB combustor. If the AEP design were levelized with GE's operating bed temperature, AEP's performance would improve significantly and easily negate the penalty that could be applied to it for levelizing condenser back pressure.

Plant Electrical Output

The plant gross electrical output varies for each design: C-W - 484 MW, GE - 679 MW, AEP - 512 MW, reference PCF - 568 MW. These values are doubled for this assessment which increases the differentials. No attempt has been made to levelize the plant output as it was deemed inappropriate to modify the contractors' designs in any way. It can be argued that the C-W, AEP and PCF designs are close enough in output to be within the accuracy of this report, but the GE plant is 40% higher in electrical output than the C-W design. The differences could be made up by the addition of modules to upgrade the C-W and AEP designs or plant design modifications to downgrade the GE design.

Using an arbitrary scaling power, therefore, could penalize the plant(s) being levelized unfairly. Due to the detailed cost estimate provided by C-W it is possible to estimate the cost impact of adding two PFB/ gas turbine modules to increase the plant output to 1292 MW. In this case the savings are associated with increasing the steam cycle from 400 MW to 520 MW and would result in a decrease in unit cost of $19/kW to $754/kW and a decrease in busbar power cost of 0.5 mills/kWh to 43.64 mills/kWh.

The evaluation of systems as complex as the three PFBC designs reviewed in this report would, under normal utility practice, involve an assessment of the plant availabilities based on the combination of the component reliabilities and the attendant cost of replacement energy associated with the particular utility system in which the plant would be installed. This was not part of the Burns and Roe scope of work for EPRI, but it does deserve some discussion.

A review of Table 2-2 shows each plant is composed of multiple components. For a nominal 1000 MW plant design C-W has the most components with 12 PFBC's, 12 gas turbines in double-ended configuration, 6 waste heat recovery units and 1 steam turbine; GE has 6 PFBC's, 6 gas turbines, 6 economizers and 2 steam turbines; AEP has the least with 4 PFBC's, 4 gas turbines, 4 intercoolers, 4 economizers and 2 steam turbines. The C-W design offers the greatest flexibility in load following with a saw tooth curve for heat rate vs. plant output as shown on Figure 2-1 reproduced from the C-W DOE report. The GE and AEP designs would also exhibit saw tooth curves but, with fewer components, have less peaks and valleys. The flexibility offered by the C-W design ensures greater plant availability for part load operation but, conversely, offers less chance of the plant operating at 100% load as there are more components that must operate to achieve this mode. However, the GE and AEP designs would experience a greater loss of capacity with the failure of a single component. This is particularly true if the steam cycle is inoperable, in which case one half of the nominal 1000 MW plant would be shutdown. The advantage of the C-W air cycle is that with the steam cycle out of service, the gas turbines can still operate as the PFB combustors are air-cooled and independent of the steam cycle. Operating in this mode would, of course, be less efficient as gas turbine exhaust waste heat is not being recovered.

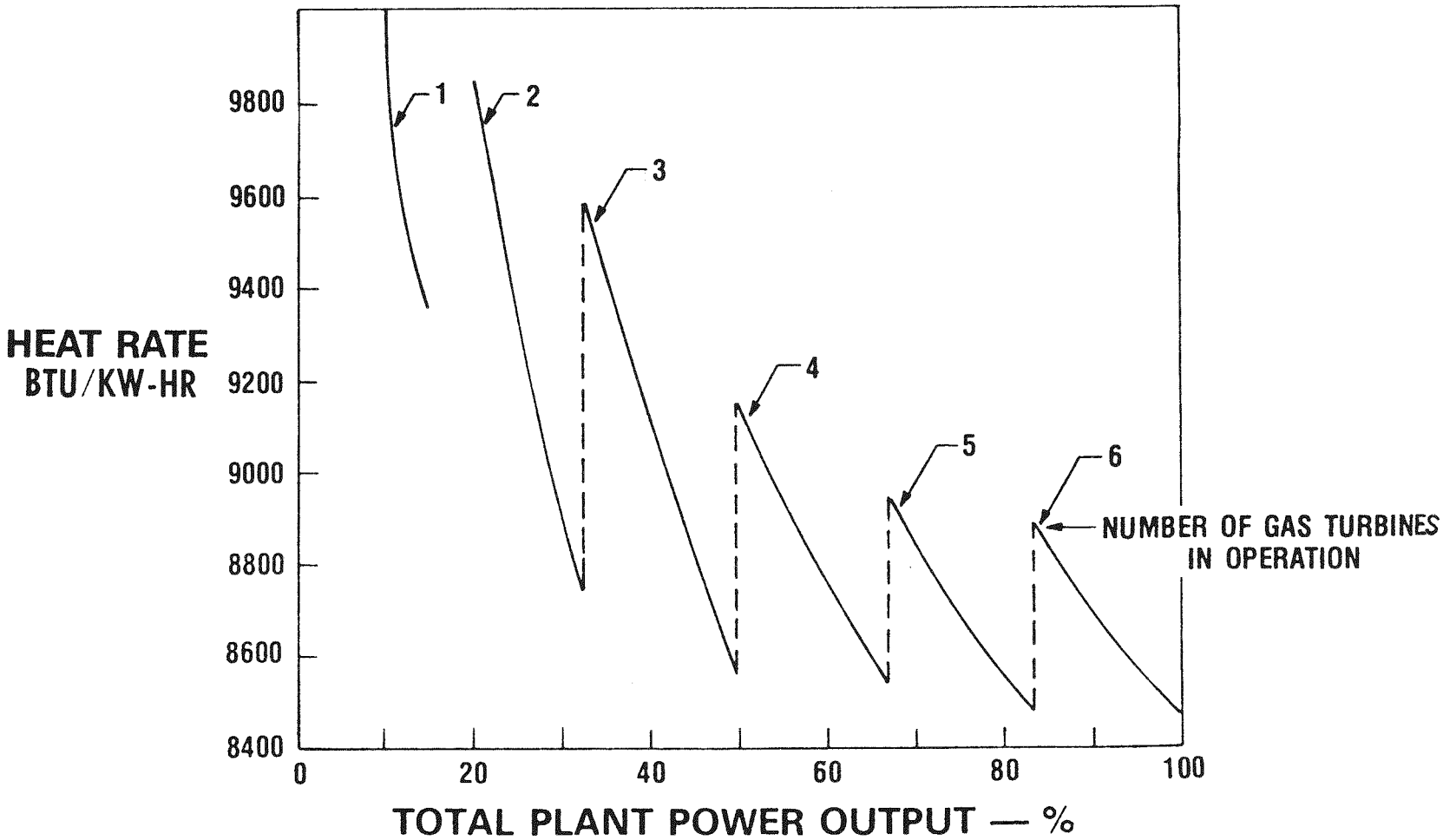

Figure 2-1. 500 MW PFB Modular Commercial Plant Turn Down Capability

Without selecting reliability factors for each component and determining the loss of load probabilities for each design it is difficult to assign any penalty or credit to the different plant designs. However, C-W conducted such an analysis and claims in its DOE report (4) and subsequent correspondence with B&R (10) that the pulverized coal-fired (PCF) plant should be penalized 4 to 4.5 mills/kWh for eastern coal. A similar argument can be made for the other PFBC plant design also resulting in a relative improvement in busbar power costs compared with the PCF plant. Due to the number of components related with each PFBC plant design and the different impacts associated with the loss of the steam cycle, the reserve capacity evaluation is complex and requires considerable effort to complete.

In summary, the PFBC plant designs appear to be competitive with the PCF plant. However, the following should be noted:

- This evaluation has been based upon preliminary design and operating data, particularly with respect to the AEP design.
- There is no certainty that any of the PFBC designs can meet the required particulate emission standard of 0.03 lbs/10^6 Btu.
- Considerable research is required to determine the reliability of the proposed hot gas clean-up systems and PFB combustors.
- Gas turbine tolerance to particulate loading has yet to be defined and demonstrated.
- The assessment has been limited to busbar power costs.
- Levelizing of operating parameters and gross electrical output has not been incorporated in the assessment.

Section 3

DESIGN AND ECONOMIC CRITERIA

DESIGN CRITERIA

Plant Location

The typical plant site is located in the mid-continental U.S. area with available raw makeup and condenser cooling water, utilities and ground transportation.

Plant Size

The plant size is a nominal 1000 MWe consisting of appropriately sized modular units.

Steam Conditions

The thermal cycle for the PCF plant has seven feedwater heaters and turbine throttle steam conditions of 2400 psig and 1000°F, and reheat to 1000°F.

The PCF plant consists of two units, each with a turbine generator guaranteed for a 568,214 kW gross output at 2.4 inches Hg back pressure and 0 percent makeup. The maximum capability of this turbine generator is 620,180 kW with valves wide open and 5 percent overpressure at the throttle. The turbine is a tandem compound four flow machine with 30 inch last stage blade length and a speed of 3600 rpm.

Plant Life

The plant life is 30 years.

Plant Construction Startup and Completion

The PCF plant construction period is 4 years, with construction startup in mid-1976 and construction completion in mid-1980. PCF plant operation begins on July 1, 1980.

The PFBC plants have a 3 year construction period, with construction startup on January 1, 1977 and construction completion on December 31, 1979. PFBC plant operation begins on January 1, 1980.

Other Plant Factors

The PFBC plants will utilize the particulate control systems included in the different reference designs.

The PCF plant includes a flue gas desulfurization (FGD) system utilizing limestone for SO_2 emission control and electrostatic precipitators (ESP) for particulate control.

Coal Sources and Analyses

The analyses of the coals selected for this study is presented in Table 3-1. The eastern bituminous coal is from the Illinois reserves. The western subbituminous coal is from the Wyoming Powder River Basin reserves.

Limestone and Dolomite Analyses

The analyses of the limestone and dolomite used in this study for mass and energy balances and equipment sizing is presented in Table 3-2.

Environmental Standards

The environmental standards for the plant designs correspond to the June 1979 New Source Performance Standards:

	Emission Limits (lbs/10^6 Btu)
SO_2	90% removal for eastern bituminous, 70% for western subbituminous
NO_x as NO_2	0.6 for eastern bituminous, 0.5 for western subbituminous
Total Particulates	0.03

ECONOMIC CRITERIA

Total Plant Investment

The determination of total plant investment (in mid-1978 dollars) is illustrated below:

Table 3-1

COAL ANALYSES

Coal Type	Eastern	Western
Proximate Analysis, %		
Moisture (as received)	12.0	30.4
Volatile Matter	33.0	31.1
Fixed Carbon	39.0	32.1
Ash	16.0	6.4
	100.0	100.0
Ultimate Analysis, %		
Ash	16.0	6.40
Sulfur	4.0	0.48
Hydrogen	3.7	3.40
Carbon	57.5	57.85
Nitrogen	.9	0.62
Chlorine	.1	0.03
Oxygen	5.8	10.83
Moisture	12.0	30.40
	100.0	100.0
Higher Heating Value, Btu/lb	10,100	8,020

Table 3-2

DESIGN LIMESTONE AND DOLOMITE ANALYSES*

	Greer Limestone	Dolomite
$CaCO_3$	75.38%	53.9%
$MgCO_3$	2.69%	41.4%
H_2O	5.0 %	1.0%
SiO_2 + Inerts	16.93%	3.7%
Total	100 %	100 %

*Analyses used for mass and energy balances and equipment sizing.

Process Capital	A
General Facilities	B
Engineering and Home Office Fees	C
Project Contingency	D
Process Contingency	E
Sales	F
Total Plant Investment	TPI = A + B + C + D + E + F

Process Capital. Process (Onsite) Capital Costs include both Total Direct Construction Costs and Undistributed Construction Costs.

Total Direct Construction Costs for all onsite processing units are presented in mid-1978 dollars.

Undistributed Construction Costs include the costs of onsite temporary facilities, construction equipment and construction services, taken to be 6% of the total direct construction costs.

The interface between the power generating plant and the distribution system is at the high voltage bushings of the step-up transformers. Therefore, switchyard costs are not included in the plant capital cost estimate.

General Facilities. General Facilities (Offsite) Costs such as roads, office buildings, shops, laboratories, chemical and by-product storage systems are included in the onsite capital costs. No allowances are made for any offsite or general facilities beyond those included in the plant facilities.

Engineering and Home Office. Engineering design and construction management costs are taken to be 10% of total direct construction costs.

Project Contingency. A capital cost contingency factor is added. This is a project contingency factor that is intended to cover additional equipment that might result from a more detailed design of a definitive project at an actual site. The project contingency is 15 percent for all plant systems and components and is applied to items A, B and C above.

Process Contingency. This is an additional capital cost contingency applied to unproven technology in an effort to quantify the uncertainty in the design and cost of the commercial scale equipment. This contingency is used for comparing an unproven process with a commercially proven process, and is taken as 10%. This factor is applied to the costs of the PFBC boiler, fuel and dolomite feed systems and the hot gas cleanup system, for the PFBC plants. In addition, a 10% contingency is applied to the cost of the FGD system for the PCF plants.

Sales Tax. Sales tax are included in items A and B.

Total Capital Requirements

The total capital requirement includes all capital necessary to complete the entire project. These items include:

Total Plant Investment	TPI
Royalty Allowance	G
Preproduction Costs	H
Inventory Capital	I
Initial Catalyst and Chemicals Charge	J
Allowance for Funds During Construction	K
Land	X
Total Capital Requirement	TCR = TPI + G + H + I + J + K + X

Royalty Allowance. It is assumed that all royalties are paid by the equipment manufacturers and are included in the equipment cost.

Preproduction Costs. Preproduction costs include the following:

- One month's variable operation costs at full capacity excluding coal. Variable costs are catalysts and other chemicals and utilities.
- One month's fixed costs. Fixed costs are operating and maintenance labor, administrative and support labor, and maintenance materials.
- 2% of total plant investment. (This charge covers expected changes and modifications to equipment that will be needed to bring the plant up to full capacity).

- 25% of full capacity fuel cost for one month. This charge covers inefficient operation that occurs during the startup period.

Inventory Capital. The value of inventories of fuel, other consumables, and byproducts is capitalized and included in the inventory capital account. The inventory capital is estimated as follows:

- One month's supply of fuel based on full capacity operation.
- One month's supply of other consumables (excluding water) based on full capacity operation.

Initial Catalyst and Chemicals Charge. The initial cost of any catalyst or chemicals that are contained in the process equipment (but not in storage, which is covered in inventory capital) is to be included.

Allowance for Funds During Construction (AFDC). AFDC is calculated from the center of gravity of expenditures, based on compounded 8% per year interest over the plant construction expenditure schedule. For a center of gravity of two years, representing the four year construction period of the PCF plant, the AFDC is 16.6% of total plant investment (TPI). For a center of gravity of one and one-half years, representing the three year construction period of the PFBC plants, the AFDC is 12.2% of TPI.

Land. The cost of land acquisition and land rights is assumed to be $5,000/acre, in mid-1978 dollars.

Operating Costs

Coal. The unit cost of the eastern coal delivered to the plant is $21.86/ton in mid-1978 dollars ($1.082/$10^6$ Btu). The unit cost of the western coal delivered to the plant is $15.56/ton in mid-1978 dollars ($0.97/$10^6$ Btu).

Limestone and Dolomite. The unit cost of the limestone and dolomite delivered to the PCF plant is $10.00/ton, in mid-1978 dollars.

Waste Disposal. Unit disposal cost for dry, inert waste is $4.00/ton, in mid-1978 dollars. Unit disposal cost for wet sludge waste is $8.50/ton, on a dry basis, in mid-1978 dollars.

Untreated River Water. Untreated river water cost is $0.40/1000 gallons, in mid-1978 dollars.

Electricity. Electricity cost is 30 mills/kWh, in mid-1978 dollars.

Waste Water. Any waste water streams are treated to meet discharge requirements with the water-treating equipment costs charged to the plant.

Sulfur Byproducts. No credit is taken for any byproduct sulfur produced.

Maintenance. Annual maintenance costs are estimated based on the personnel required per job category and rate consistent with the job classification. Rates include both direct labor charges and payroll burden.

Administrative and Support Labor. Administrative and support labor costs are 30% of operating and maintenance labor costs.

General and Administrative Expense. General and administrative expenses are not included in annual revenue requirements.

Property Taxes and Insurance. Property taxes and insurance costs are 2.0% per year of total capital requirement and are included in the levelized fixed charge rate.

Product Cost Basis

Capacity Factor. The capacity factor is 70%, based on guaranteed turbine-generator output.

Operating Costs. Operating costs are presented on a 30-year levelized basis using 1979 to 2008 levelized prices. For costs other than coal, first-year cost is multiplied by 1.886. This corresponds to 6 percent escalation and 10 percent cost of capital.

Coal first year costs are multiplied by 1.986 (6.424 percent escalation, 10 percent cost of capital) for the western coal and 1.935 (6.212 percent escalation, 10 percent cost of capital) for the eastern coal.

Cost of Capital. The fixed charges (income taxes, interest on debt, return on equity, depreciation and property taxes and insurance) are computed on a levelized basis with a 10% discount rate. The discount rate is based on the average cost of money. Using this basis, the fixed charges are 18.0% per year of the Total Capital Requirement.

The fixed charge is based on the Total Capital Requirement with working capital treated the same as depreciable capital.

Power Cost Basis. The busbar power cost, in mills/kWh, is calculated using the 30-year levelized fixed charges, O&M charges, and fuel charges.

Section 4

CURTISS-WRIGHT PFBC POWER PLANT

SYSTEM DESIGN

Curtiss-Wright developed the details of its proposed commercial PFBC power plant design under DOE Contract EX-76-C-01-1726 and published the results on March 15, 1977 (4). The size of the commercial plant is a nominal 500 MW and is shown schematically on Figure 4-1. The plant comprises three PFBC/gas turbine/waste heat recovery boiler modules supplying steam to a common steam turbine. Each module consists of two independent gas turbines with dedicated PFB combustors, driving a common electric generator, and exhausting into separate waste heat recovery boilers. The PFB combustors are fed from common coal and dolomite receiving, storage and feed systems. PFB combustor solid wastes are stored on-site in silos for ultimate disposal off-site. The plant arrangement proposed by C-W is shown on Figure 4-2.

Air is delivered to the PFB combustors by the gas turbine driven compressors. One-third of the air is used to support combustion in the PFBC and two-thirds flows through tubes in the fluidized bed. Coal and dolomite are fed into the combustor in predetermined proportions to achieve the required sulphur retention. Flue gas from the combustor is passed through a particulate removal system, then combined with the heated air from the in-bed tubes and routed to the compressor drive turbine. After expansion through the compressor drive turbine and the power turbine, which drives the electric generator, the exhaust gas flows through dual pressure waste heat recovery boilers which produce LP and HP steam for a common bottoming steam cycle.

EVALUATION PARAMETERS AND RESULTS

The C-W commercial PFBC plant evaluation was conducted under a different set of evaluation parameters than those used in this study. A comparison of these parameters is presented in Table 4-1. The following differences have a significant effect on the evaluation:

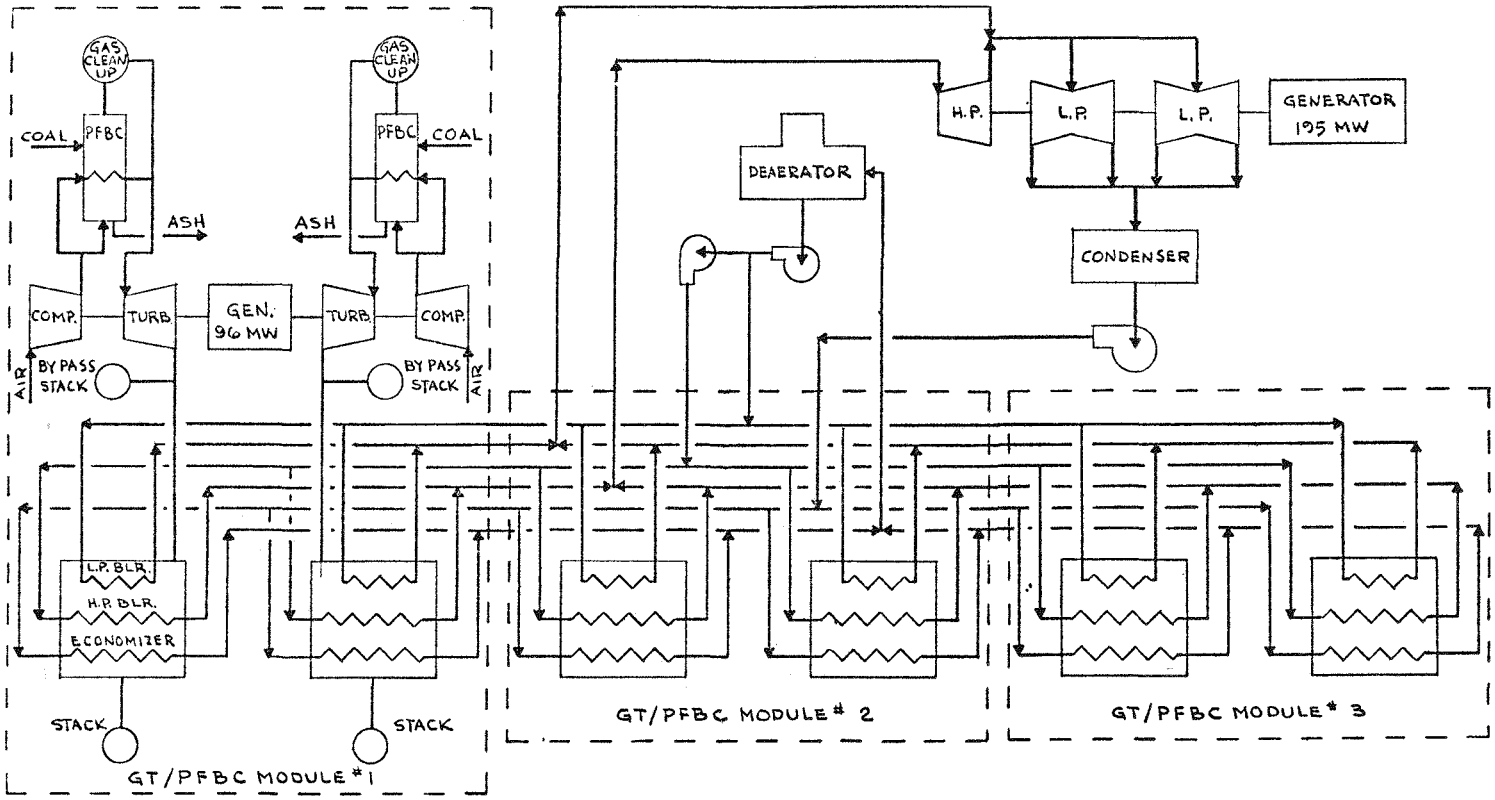

Figure 4-1. Flow Schematic Curtiss-Wright PFBC Power Plant Nominal 484 MW Output

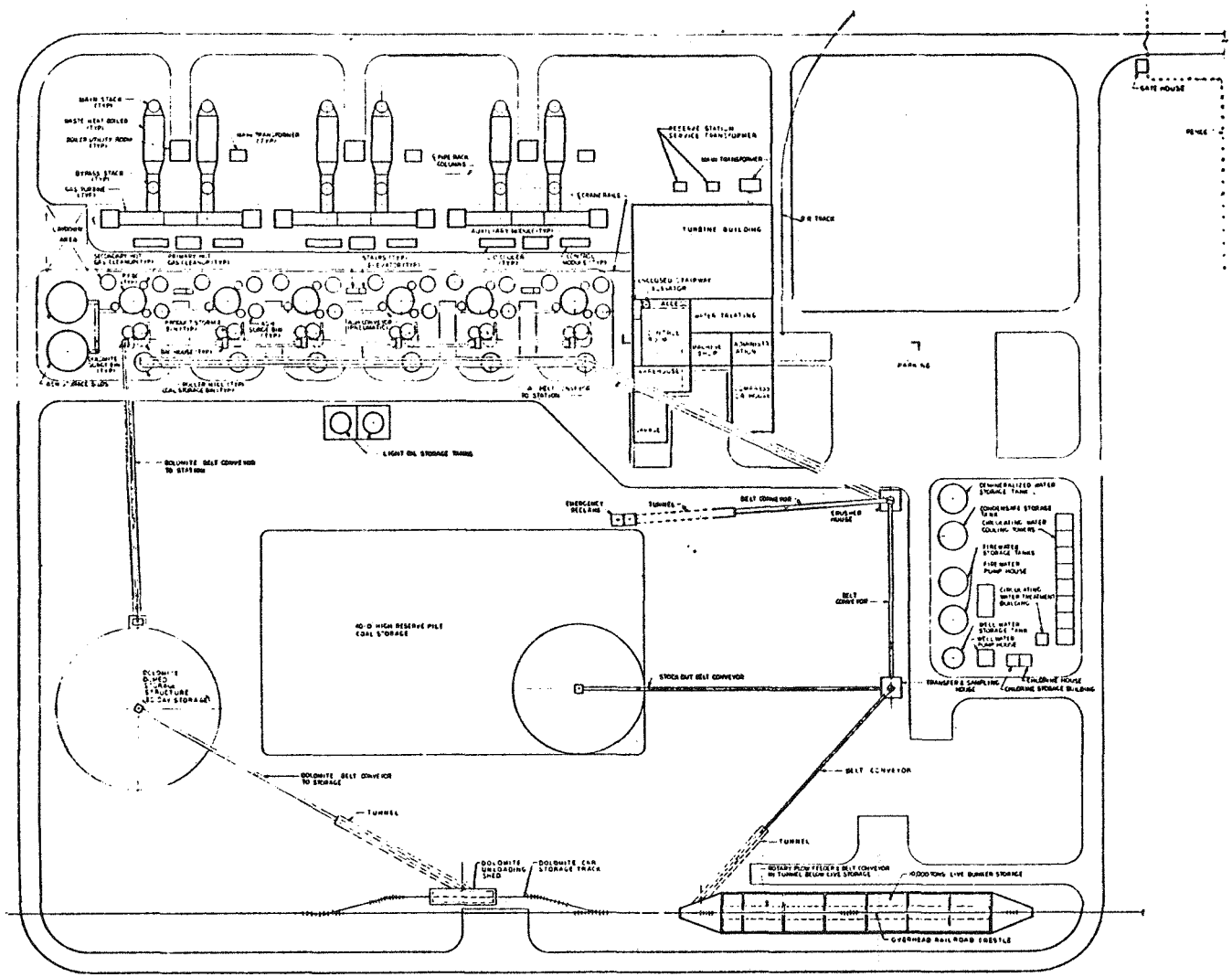

Figure 4-2. 484 MW Plant Arrangement

Table 4-1

ECONOMIC FACTORS

	C-W	EPRI
Plant Life, years	30	30
Capacity Factor	0.7 & 0.8*	0.7
Project Contingency, %	14.75	15.0
Process Contingency, %	-	10.0
Interest, %	10.5	8.0
Discount Rate, %	-	10.0
Levelized Fixed Charge Rate, %	17.5	18.0
Inflation Rate, %	-	6.0
AFDC, %	-	16.6
Plant Construction Period, years	-	4
Labor Rate, $/hr	19.30	23.75
Unit Costs		
Western Coal, $/t	-	15.56
Eastern Coal, $/t	42.67**	21.86
Limestone, $/t	-	10.00
Dolomite, $/t	10.00	10.00
Waste Disposal - Dry	-	4.00
- Wet	-	8.50
Land, $/acre	1000***	5000
Water, $/1000 gal	-	0.40
Levelization Factors		
Coal Costs - Western	-	1.986
- Eastern	Incl. in Unit Costs	1.935
Operating Costs	-	1.886

* Both figures indicated in C-W report

** Includes 30 year levelizing factor (corresponds to $22.05 in mid-1978 dollars)

***Not included in C-W cost estimate

- C-W did not include a 10% process contingency which is applied to components still under development - in this case, the PFBC boiler, fuel feed system and the hot gas clean-up system.
- C-W did not include an Allowance for Funds During Construction.

For its evaluation C-W used an eastern coal with a sulfur content of 4.1%, a 14.6% ash and a heating value of 13,090 Btu/lb. The fuel analysis of this coal is shown on Table 4-2 in comparison with the EPRI eastern and western coals. Similarly, the comparison of C-W and EPRI dolomite analyses is shown on Table 4-2.

The results of the economic analysis are summarized in Table 4-3 and include, for comparison purposes, the C-W as-reported evaluation results and the reference 1000 MW PCF plant data. Table 4-4 presents the capital requirement estimates including a breakdown by FPC account number and Table 4-5 presents the plant operating cost estimate.

AS-REPORTED C-W BASE CASE ANALYSIS

The data presented by C-W in its report to DOE indicate a projected capital cost of $640/kW and busbar power cost of 35.08 mills/kWh for a nominal 500 MW plant. These results differ significantly from those developed using the EPRI evaluation procedures, economic factors and coal analyses.

It appears that the capital cost of $640/kW reported by C-W is derived by dividing what is termed by C-W as "Total Present Day Cost," by 500,000 kW - the nominal plant size. This "Total Present Day Cost" may be assumed to be synonymous with EPRI's term "Process Capital". Thus the allowances for Engineering, Project and Process Contingencies, Preproduction Costs, Inventory and AFDC accounted for in the EPRI evaluation procedures have not been incorporated into the C-W evaluation. Applying these allowances effectively increases the capital costs by approximately 50%.

The use of 500,000 kW as the plant rating appears to conflict with the material and energy balance prepared by C-W and included in its report to DOE. This balance shows total gross gas turbine output of 289,440

Table 4-2

COAL ANALYSES

	C-W	EPRI Eastern	EPRI Western
Proximate Analysis, %			
Moisture	0.8	12.0	30.4
Volatile Matter	23.0	33.0	31.1
Fixed Carbon	61.6	39.0	32.1
Ash	14.6	16.0	6.4
Ultimate Analysis, %			
Ash	14.6	16.0	6.4
Sulfur	4.1	4.0	0.48
Hydrogen	4.3	3.7	3.4
Carbon	73.7	57.5	47.85
Nitrogen	1.4	0.9	0.62
Chlorine	-	0.1	0.03
Oxygen	1.9	5.8	10.83
Moisture	0.8	12.0	30.40
Higher Heating Value, Btu/lb	13,090	10,100	8,020

DOLOMITE ANALYSES

	C-W	EPRI
$CaCO_3$	54.2	53.9
$MgCO_3$	44.8	41.4
H_2O	-	1.0
SiO_2 + Inerts	1.0	3.7

Table 4-3

CURTISS-WRIGHT PFBC PLANT
ECONOMIC ANALYSES SUMMARY

	C-W 485 MW Base Plant As-Reported	EPRI/C-W 1000 MW PFB Eastern Coal	Reference PCF Plant Eastern Coal	EPRI/C-W 1000 MW PFB Western Coal	Reference PCF Plant Western Coal
PLANT PERFORMANCE DATA					
Steam Turbine Gross Output, MW	195.4	390.8	1,136.4	390.8	1,136.4
Gas Turbine Gross Output, MW	289.4	578.8	-	578.8	-
Plant Gross Output, MW	484.8	969.6	1,136.4	969.6	1,136.4
Auxiliary Load, MW	1.5	28.1	64.4	27.2	59.27
Plant Net Output, MW	483.3	941.5	1,072.1	942.4	1,077.16
Net Plant Heat Rate, Btu/kWh	8,524	8,758	9,741	8,749	9,694
SO_2 Emission Reduction, %	90	90	90	70	70
Ca/S Molar Ratio	1.5	1.5	1.02	0.8	1.3
MATERIALS CONSUMPTION/PRODUCTION					
Coal, t/h	157.3	408.2	517.0	514.0	651
Dolomite, t/h	55.1	143.7	-	11.43	-
Limestone, t/h	-	-	66.6	-	10.93
Dry Sludge, t/h	65.36	175.2	82.92	42.85	41.64
Wet Sludge, t/h	-	-	86.43	-	14.28
Water Consumption, gpm	9,600	3,000	13,000	3,000	13,000
COSTS (Mid-1978 dollars)					
Process Capital, $/kW	640	521	476	517	461
Total Plant Investment, $/kW	-	671	605	667	584
Total Capital Requirement, $/kW	-	782	734	773	706
30-Year Levelized Busbar Power Cost, (1979-2008), mills/kWh	35	50	50	44	45

Table 4-4

CURTISS-WRIGHT PFBC PLANT
TOTAL CAPITAL REQUIREMENTS (Mid-1978 $1000)

FPC Account No.	C-W 485 MW Base Plant As-Reported	EPRI/C-W 1000 MW PFB Eastern Coal	Reference PCF Plant Eastern Coal	EPRI/C-W 1000 MW PFB Western Coal	Reference PCF Plant Western Coal
311 Structures and Improvements	27,929	49,672	46,605	49,672	46,311
312 Boiler Plant Equipment	165,196	281,561	284,699	278,646	271,597
314 Turbogenerator Units	52,914	91,755	108,480	91,755	108,480
315 Accessory Electrical Equipment	28,740	34,858	32,490	34,858	32,490
316 Miscellaneous Plant Equipment	2,637	2,563	3,734	2,563	3,734
353 Station Equipment	1,420	2,211	5,742	2,211	5,742
Total Direct Construction Cost	278,836	462,620	481,750	459,705	468,354
Undistributed Construction Cost	41,152	27,754	28,910	27,578	28,101
Process Capital	320,000	490,374	510,660	487,283	496,455
Engineering and Home Office	0	46,266	48,179	45,969	46,835
Project Contingency	0	80,500	83,825	79,989	81,494
Process Contingency	0	15,093	6,185	15,087	4,260
Total Plant Investment	0	632,233	648,849	628,328	629,044
Preproduction Costs	0	16,806	17,931	15,210	16,211
Inventory Capital	0	8,031	9,328	6,389	8,066
AFDC	0	77,130	107,708	76,653	104,421
Land and Land Acquisition	0	2,000	2,700	2,000	2,200
Total Capital Requirement	320,000	736,200	786,512	728,580	759,942
Unit Cost, $/kW net	640	782	734	773	706

Table 4-5

CURTISS-WRIGHT PFBC
PLANT OPERATING COSTS

	C-W 485 MW Base Plant As-Reported	EPRI/C-W 1000 MW PFB Eastern Coal	Reference PCF Plant Eastern Coal	EPRI/C-W 1000 MW PFB Western Coal	Reference PCF Plant Western Coal
First Year Fixed Operating Costs					
Operating Labor, $/kWyr	-	2.64	2.67	2.64	2.65
Maintenance Labor, $/kWyr	-	1.76	1.95	1.76	1.94
Maintenance Materials	-	5.99	6.62	5.99	6.59
Administration and Support Labor, $/kWyr	-	1.32	1.38	1.32	1.38
Total First Year Fixed O&M, $/kWyr	-	11.71	12.62	11.71	12.56
First Year Variable Operating Cost (Excluding Fuel) (Mid-1978 dollars)					
Water, mills/kWh	-	0.08	0.29	0.08	0.29
Chemicals (Limestone or Dolomite), mills/kWh	-	1.53	0.62	0.12	0.10
Other Consumables, mills/kWh	-	0.15	0.15	0.15	0.15
Waste Disposal (Wet and Dry), mills/kWh	-	0.74	1.34	0.18	0.44
Total First Year Variable Operating Costs (Excluding Fuel), mills/kWh	-	2.50	2.40	0.53	0.98
First Year Fuel Costs, mills/kWh	-	9.48	10.54	8.49	9.40
30-Year Levelized Fixed Charges, $/kWyr	-	140.74	132.05	139.17	126.99
30-Year Levelized Costs (1979-2008)					
Limestone or Dolomite, mills/kWh	-	2.88	1.17	0.23	0.19
Waste Disposal, mills/kWh	-	1.40	2.53	0.34	0.83
Water, mills/kWh	-	0.14	0.55	0.14	0.55
Other Consumables, mills/kWh	-	0.28	0.28	0.28	0.28
Total Variable O&M, mills/kWh	-	4.70	4.53	0.99	1.85
Fixed O&M, mills/kWh	3.45	3.61	3.88	3.60	3.86
Fixed Charges, mills/kWh	14.09	22.95	21.54	22.70	20.71
Subtotal, mills/kWh	-	31.26	29.95	27.29	26.42
Fuel Costs, mills/kWh	17.54	18.34	20.40	16.85	18.68
Busbar Power Costs, mills/kWh	35.08	49.60	50.35	44.14	45.10

kW and gross steam turbine output of 195,386 kW, for a total plant gross output of 484,826 kW. It is normal, however, to rate the plant costs with net output which represents the plant's exportable production. C-W indicates in its report an auxiliary power load, termed "Pump Power," of 1,528 kW to give a net plant output of 483,298 kW. This auxiliary power load is inadequate for a plant of this size and C-W has since recalculated the auxiliary power requirements which are presented on Table 4-6 with adjustments deemed appropriate.

Since the issuance of the original report in March, 1977, C-W has reviewed its design and prepared a revised cost estimate. Table 4-7 shows the material costs and construction labor manhours included in the March 1977 report which result in a total direct construction cost for the 485 MW plant of $297.4 million. Table 4-8 shows the modifications to these costs reported by C-W in its letter dated November 12, 1979. These modifications result in a total direct construction cost for the 485 MW plant of $247.3 million. Thus, Table 4-8 becomes the base for developing costs for the nominal 1000 MW plant operating on EPRI eastern and western coals. This revised direct construction cost of $247.3 million includes adjustments for equalizing the construction labor rate at $23.75/h. This labor rate compares with an average rate of about $19.30/h used by C-W and effectively offsets the material cost saving by approximately $14.5 million.

EPRI NOMINAL 1000 MW PFBC EASTERN COAL PLANT

The results of the economic assessment of the nominal 1000 MW plant, derived from the C-W design operating on EPRI eastern coal, are shown on Tables 4-3, 4-4 and 4-5. These indicate a total capital requirement of $782/kW and a busbar power cost of 50 mills/kWh. Compared with the reference PCF unit operating on EPRI eastern coal, this plant is shown to be 6.5% more expensive in capital costs and essentially equal in busbar power costs.

The C-W plant is a nominal 484 MW in size. It has been assumed for this analysis, that the nominal 1000 MW plant would consist of two 484 MW plants with common coal, dolomite and ash handling systems. The upgrading of the C-W 485 MW plant was conducted in three stages:

Table 4-6

ESTIMATED AUXILIARY LOADS (kW)

	C-W 500 MW Plant	EPRI/C-W 1000 MW Eastern Coal	EPRI/C-W 1000 MW Western Coal
Coal Mills	630	1,660	2,060
Condensate Pumps	900	1,800	1,800
Cooling Water Pumps	340	680	680
Boiler Feed Pumps	1,870	3,740	3,740
Air Compressors	860	1,720	1,720
Circulating Water Pumps	2,730	5,460	5,460
Cooling Tower Fans	1,200	2,400	2,400
Make-Up Water Pumps	380	760	760
Coal and Dolomite Handling	300	800	750
Building Services	65	130	130
Waste Disposal	700	1,600	400
Transformer Losses	2,500	4,800	4,800
Lighting	1,000	1,500	1,500
Subtotal	13,475	27,050	26,200
Third Cyclone	0	1,025	1,025
Total	13,475	28,075	27,225

Table 4-7

C-W AS-REPORTED COSTS
(Mid-1978 $1000)

FPC Account	Material	Labor Manhours	Labor Cost	Total Cost
311	11,484	897	21,303	32,787
312	120,344	2,274	54,007	174,351
314	44,705	421	9,999	54,704
315	18,049	561	13,324	31,373
316	2,205	22	522	2,727
353	1,284	7	166	1,450
Total	198,071	4,182	99,321	297,392

Labor costs based upon $23.75/h.

Table 4-8

MODIFICATIONS TO C-W BASE PLANT COSTS
(Mid-1978 $1000)

FPC Account		Costs From Table 4-7	Cost Modifications (Reductions) 1	2	3	4	Total Reduc.	Base 500 MW Plant Costs
311		32,787	-	-	-	-	-	32,787
312	Coal	7,944	-	983	-	-	983	6,961
	Dolomite	2,566	-	-	-	-	-	2,566
	Waste	1,114	-	-	-	-	-	1,114
	PFB	162,679	21,255	4,896	7,401	-	33,552	129,127
	Total	174,351	21,255	5,879	7,401	-	34,535	139,816
314		54,704	3,582	-	-	-	3,582	51,122
315		31,373	-	-	-	10,930	10,930	20,443
316		2,727	-	1,035	-	-	1,035	1,692
353		1,450	-	-	-	-	-	1,450
Total		297,392	24,837	6,914	7,401	10,930	50,082	247,310

Mod 1. - Engineering allowances included in accounts 312 and 314

Mod 2. - Reconfiguration of PFBC/gas turbine modules to combine waste heat boilers, stacks and coal/dolomite preparation systems

Mod 3. - Removal of gas duct liners between PFBC and hot gas clean-up cyclones

Mod 4. - Re-assessment of controls and instrumentation requirements.

- Scaling for increase in capacity
- Scaling for difference in coal analysis
- Incorporating a single 400 MW steam turbine generator instead of 2x200 MW units.

The multipliers used for scaling to the nominal 1000 MW plant are shown on Table 4-9. A multiplier of 2 was used for equipment which doubles in quantity and a multiplier of 1.515 (equivalent to using a scaling power factor of 0.6) was used for shared equipment. The breakdown of Account 312 was derived from the data supplied by C-W. This exercise shows a 5% saving in unit cost by doubling the plant size.

The coal use multipliers are also shown on Table 4-9 and affect only the coal, dolomite and waste components of Account 312. The multipliers used, based upon flow ratios to the power of 0.6, are essentially the same for each component.

The particulate emissions standards used by C-W was 0.1 lb/MMBtu. The EPA has recently upgraded this standard to 0.03 lb/MMBtu and thus additional particulate removal equipment is required. Such equipment could be an electrostatic precipitator or a baghouse located in the cold gas ducting or a third hot gas cyclone. For this analysis the third cyclone system was used at an estimated price of $6,574,000 and has been included in Table 4-9. The third hot gas cyclone system was chosen as it offers additional protection for the gas turbine, the tolerance of which to particulate loading has yet to be suitably quantified. It was assumed that the use of the third cyclone induces an additional 6 inches water gauge pressure drop in the hot gas system. Using the air flow given by C-W in its report, this results in an additional fan power requirement of 1025 kW for the 1000 MW plant. This represents the additional energy used to drive the gas turbine compressor and thus will effectively reduce the gas turbine generator electric output. However, for convenience sake, this has been included as an auxiliary power requirement.

The result of these adjustments shows a direct construction cost for a nominal 1000 MW plant of $477.9 million. However, the C-W design may realize one additional saving by replacing the 2x200 MW steam turbines with a single 400 MW unit. This appears reasonable on the grounds that,

Table 4-9

NOMINAL 1000 MW PLANT COSTS -
EASTERN COAL
(Mid-1978 $1000)

FPC Account		Costs From Table 4-8	Size Increase Multiplier	Coal Type Multiplier	Nominal 1000 MW Plant Cost
311		32,787	1.515	1	49,672
312	Coal	6,961	1.515	1.17	12,338
	Dolomite	2,566	1.515	1.18	4,587
	Waste	1,114	1.515	1.18	1,991
	PFB	129,127	2	1	258,254
	Cyclone	-	-	-	6,574
	Total	139,816			283,744
314		51,122	2	1	102,244
315		20,443	1.8	1	36,797
316		1,692	1.515	1	2,563
353		1,450	2	1	2,900
Total		247,310			477,920

being air-cooled, the operation of the PFB combustors can be independent of the steam cycle. Table 4-10 shows a breakdown of the estimated savings associated with incorporating a single 400 MW steam turbine, which amounts to $15.3 million. This results in a direct construction cost of $462.6 million for the nominal 1000 MW plant.

The Process Contingency is based upon the cost of the unproven equipment - the coal and dolomite preparation and injection systems, PFB combustors and the hot gas clean-up system. The costs of these components is shown on Table 4-11 and indicates that for the nominal 1000 MW plant the process contingency will be based upon $150.9 million. Changes in auxiliary power requirements were made to account for increases in plant size, coal, dolomite and waste handling systems. Changes were assumed to be directly proportional to flows and a transformer loss of 0.5% was included. Table 4-6 lists the values used.

The costs shown on Tables 4-10 and 4-11 were used for the economic assessment together with a $2 million allowance for the purchase of land.

EPRI NOMINAL 1000 MW PFBC WESTERN COAL PLANT

The results of the economic assessment of the nominal 1000 MW plant derived from the C-W design and operating on western coal are shown on Tables 4-3, 4-4 and 4-5. These indicate a total capital requirement of $773/kW and a busbar cost of 44 mills/kWh. In comparison with the reference PCF plant operating on western coal, this plant is shown to be 9% more expensive in capital costs but shows a saving of 2% in busbar power cost. This apparent reversal, compared with the eastern coal case, can be attributed to the effect of the higher efficiency of the C-W PFB plant as noted in the fuel cost component of the busbar power costs.

This analysis used as a starting point the costs delineated in Table 4-8 with subsequent scaling for size and coal use. These adjustments are shown on Table 4-12 and indicate a slightly larger reduction in overall costs than that noted for the eastern coal case. Incorporating the allowance for the third cyclone system results in a direct construction cost of $475.0 million for the nominal 1000 MW plant. The credit allowed for replacing the 2x200 MW steam turbine with a single 400 MW

Table 4-10

ADJUSTMENTS TO NOMINAL 1000 MW
PLANT COSTS FOR USE OF 1x400 MW
STEAM TURBINE - EASTERN COAL
(Mid-1978 $1000)

FPC Account	Costs From Table 4-9	Credit for 1x400 MW Steam Turbine	EPRI/C-W 1000 MW Plant Costs
311	49,672	-	49,672
312	283,744	2,183	281,561
314	102,244	10,489	91,755
315	36,797	1,939	34,858
316	2,563	-	2,563
353	2,900	689	2,211
Totals	477,920	15,300	462,620

Table 4-11

BASIS FOR PROCESS CONTINGENCY
APPLIED TO ADVANCED TECHNOLOGY
EQUIPMENT
(Mid-1978 $1000)

C-W Account No.	Material Costs	Labor Man Hours (1000)	Labor Cost	Total Costs
1200.15	1,738	55	1,306	3,044
1200.16	48,788	587	13,941	62,729
1200.2	8,504	49	1,164	9,668
Totals	59,030	691	16,411	75,441

For the EPRI/C-W 1000 MW plant the process contingency is based upon 2 x $75,441,000 or $150,882,000.

Table 4-12

NOMINAL 1000 MW PLANT COSTS -
WESTERN COAL
(Mid-1978 $1000)

FPC Account		Costs From Table 4-8	Size Increase Multiplier	Coal Use Multiplier	Nominal 1000 MW Plant Costs
311		32,787	1.515	1	49,672
312	Coal	6,961	1.515	1.34	14,131
	Dolomite	2,566	1.515	0.26	1,010
	Waste	1,114	1.515	0.51	860
	PFB	129,127	2	1	258,254
	Cyclone	-	-	-	6,574
	Total	139,816			280,829
314		51,122	2	1	102,244
315		20,443	1.8	1	36,797
316		1,692	1.515	1	2,563
353		1,450	2	1	2,900
Total		247,310			475,005

unit is shown on Table 4-13. The resultant direct construction cost for the 1000 MW plant is $459.7 million.

Changes in auxiliary power requirements have been included as delineated in Table 4-6.

The costs shown on Tables 4-11 and 4-13 were used for the economic assessment together with a $2 million allowance for the purchase of land.

CONCLUSIONS

The C-W design appears to be competitive with the PCF plant design although more expensive than the other PFBC plant designs.

In comparison with the reference PCF plant the C-W commercial design is 6.5% more expensive in capital cost and equal in busbar power cost for the eastern coal case. For the western coal case the values are 9% more expensive in capital cost and 2% less expensive in busbar power cost. As these values are well within the assumed accuracy of this report, the C-W design may be considered competitive with the reference PCF plant.

The main contributor to the fact that the C-W plant design is less competitive with the reference PCF plant than the other PFBC plant designs is the cost associated with FPC Account 312. For the eastern coal case the C-W costs are $34/kW higher than the PCF unit for this account which is over 80% of the direct construction cost differential. For the western case the differential is increased to $44/kW. The difference in FPC Account 312 is even larger in comparison with the GE and AEP designs, being $98/kW and $85/kW, respectively. The impact of these differentials at the Total Capital Requirement level increases by approximately 48%, thus, essentially, accounting for the cost spread between the PFBC plant designs.

In addition, the C-W design does not take as much advantage of the benefits of scaling as the GE and AEP designs, and the selection of an air-cooled system requires additional heat transfer surface. However, the design offers considerable flexibility in part load operation which has not been evaluated in this assessment.

Table 4-13

ADJUSTMENTS TO NOMINAL 1000 MW
PLANT COSTS FOR USE OF 1x400 MW
STEAM TURBINE - WESTERN COAL
(Mid-1978 $1000)

FPC Account	Costs From Table 4-12	Credit for 1x400 MW Steam Turbine	EPRI/C-W 1000 MW Plant Costs
311	49,672	-	49,672
312	280,829	2,183	278,646
314	102,244	10,489	91,755
315	36,797	1,939	34,858
316	2,563	-	2,563
353	2,900	689	2,211
Totals	475,005	15,300	459,705

In comparison with the reference PCF plant, the C-W design produces 166 MW less gross electrical output. Adding one PFBC/gas turbine module to the C-W design and increasing the steam turbine output accordingly to approximately 455 MW would result in a plant with a gross output of 1130 MW, directly comparable with the reference PCF plant. The C-W plant costs would be decreased by the savings attributed to scaling the steam cycle, which would be approximately $10/kW or 0.3 mills/kWh for both eastern and western coal-fired plant designs. With these adjustments the relative standings of the plant costs do not change.

Section 5

GENERAL ELECTRIC PFBC POWER PLANT

SYSTEM DESIGN

General Electric developed its proposed commercial PFBC power plant design under DOE Contract EX-76-C-01-2357 and published its Preliminary Report in June 1979 (6).

GE's commercial PFBC plant design is the Coal-Fired Combined Cycle (CFCC) plant illustrated in Figure 5-1 (7). The plant comprises three PFBC/gas turbine modules (each 51 MW) supplying steam to a common supercritical steam turbine rated at 525 MW. Each PFBC/gas turbine module consists of a GE Frame 7 single shaft gas turbine and a dedicated PFBC. Steam is generated in the PFBC through in-bed and water-wall tubes, at 3500 psig 1000°F and reheated to 1000°F after expansion through the high pressure steam turbine. Combustion gases leave the PFBC at 1700°F and are routed to the gas turbine after three stages of clean-up. Gas turbine exhaust waste heat is recovered by the feedwater system through an economizer.

Figure 5-2 presents a plot plan of the commercial PFBC plant. The concept plan is based on a configuration which utilizes three gas turbine PFBC modules, forced draft cooling towers, and offsite solids waste disposal.

EVALUATION PARAMETERS AND RESULTS

The GE Preliminary Report (6), presented the economic analysis of its design using three different procedures:

- The Sterns-Roger Engineering Method (SRE)
- The GE/ECAS Method
- The GE Installation & Service Engineering Method (I&SE).

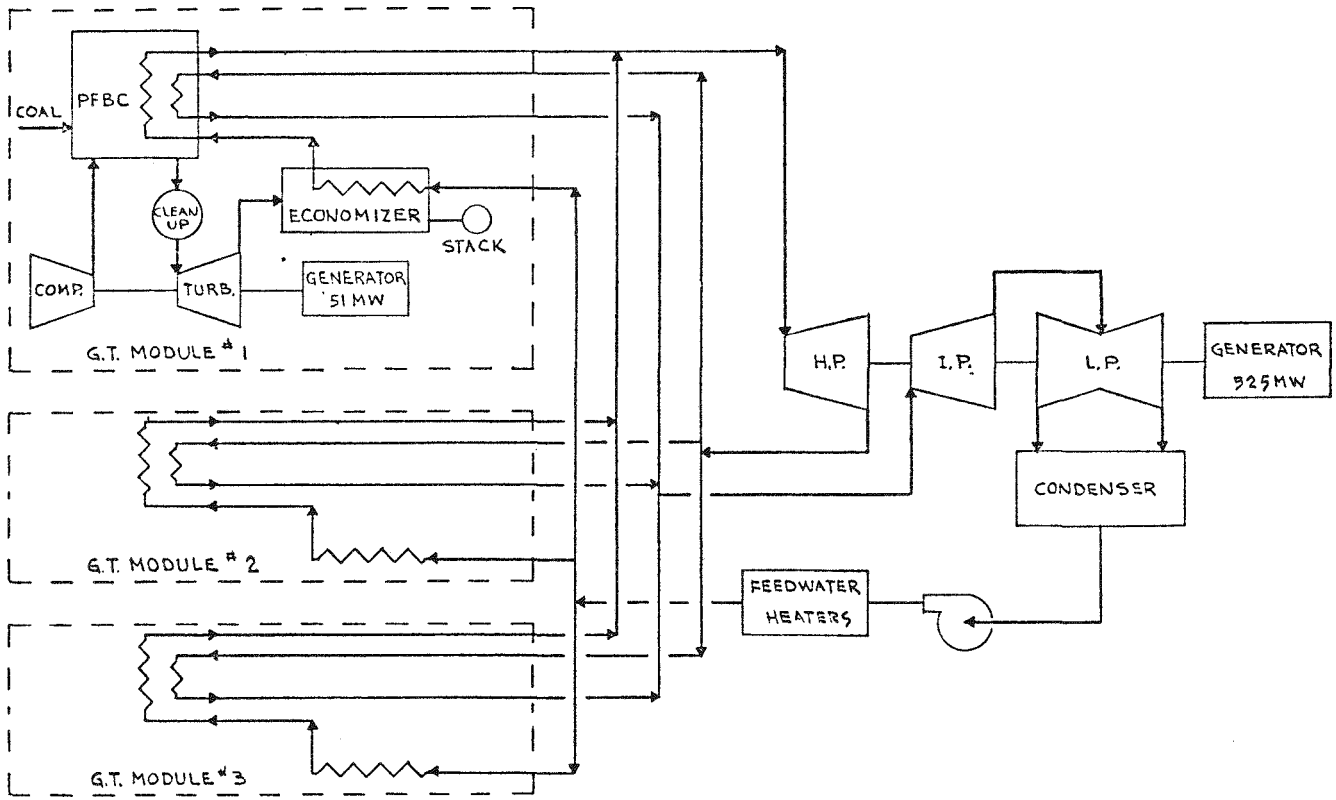

Figure 5-1. Flow Schematic General Electric PFBC Power Plant Nominal 678 MW Output

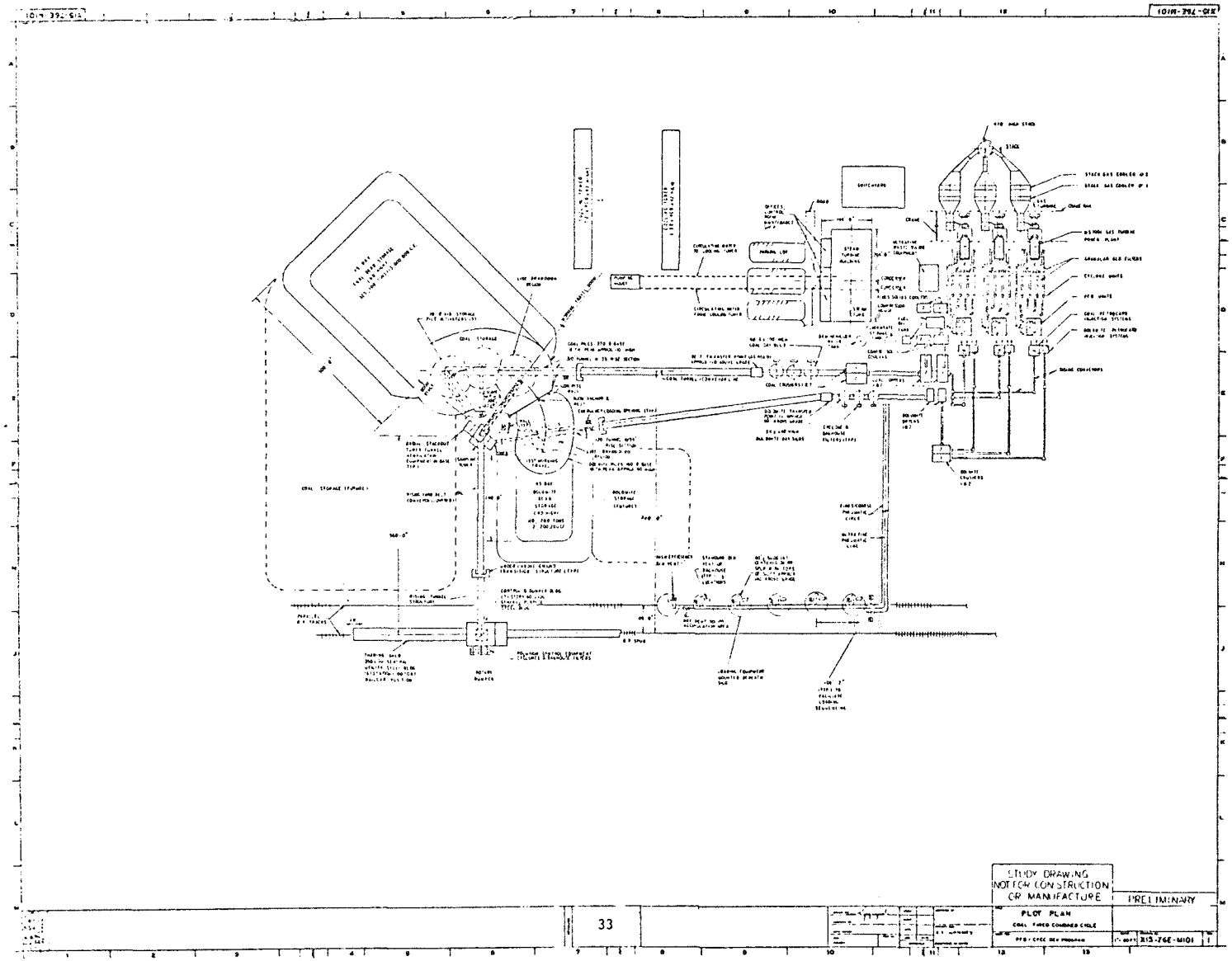

Figure 5-2. Plot Plan Coal-Fired Combined Cycle

These methods resulted in different unit costs and busbar power costs as follows (all in 1984 dollars):

- SRE - $964/kW and 39.0 mills/kWh
- GE/ECAS - $1023/kW and 40.5 mills/kWh
- I&SE - $925/kW and 38.0 mills/kWh

As the I&SE method delineated construction costs in mid-1978 dollars and the same FPC accounts, it was used for this evaluation. A comparison of I&SE and EPRI economic factors are listed in Table 5-1. The following differences have a significant effect on the evaluation:

- GE/I&SE included a contingency of 20% of the total plant cost
- GE/I&SE used an 80% capacity factor
- GE/I&SE included an allowance for interest and escalation. The EPRI procedures do not provide for escalation
- GE/I&SE used a plant construction period of 5.5 years
- GE/I&SE costs are presented in 1984 dollars.

The coal used for the GE study was an eastern coal containing 3.9% sulphur and 9.6% ash. The GE coal and dolomite analyses are compared to the EPRI eastern and western coal and dolomite analyses in Table 5-2.

Table 5-3 presents a summary of plant performance parameters and total plant costs. The performance and costs of the GE/I&SE 680 MW plant are given as-reported in reference 6. The figures for the reference 1000 MW PCF plant, for both eastern and western coals, are listed for comparison. The plant capital expenditures are shown on Table 5-4 and the plant operating costs are shown in Table 5-5.

AS-REPORTED GE BASE CASE ANALYSIS

The total capital requirement and the levelized busbar power cost for the GE 680 MW base plant, as determined by the GE/I&SE method, are $925/kW and 38.0 mills/kW, respectively, both in 1984 dollars.

Table 5-1

ECONOMIC FACTORS

	GE/I&SE	EPRI
Plant Life, years	30	30
Capacity Factor	0.80	0.7
Project Contingency, %	20.0	15.0
Process Contingency, %	-	10.0
Interest, %	10.0	8.0
Discount Rate, %	-	10.0
Levelized Fixed Charge Rate, %	18.0	18.0
Inflation Rate, %	6.5	6.0
AFDC, %	10.0	16.6
Plant Construction Period, years	5.5	4
Labor Rate, $/hr	26.60*	23.75
Unit Costs		
Western Coal, $/t	-	15.56
Eastern Coal, $/t	18.12	21.86
Limestone, $/t	-	10.00
Dolomite, $/t	-	10.00
Waste Disposal - Dry	-	4.00
- Wet	-	8.50
Land, $/acre	-	5000
Water, $/1000 gal	-	0.40
Levelization Factors		
Coal Costs - Western	-	1.986
- Eastern	Incl. in Unit Costs	1.935
Operating Costs	-	1.886
Base Cost Year	1984	mid-1978

*Based on a direct rate of $14.00 per hour and a 90% indirect cost.

Table 5-2

COAL ANALYSES

	GE	EPRI Eastern	EPRI Western
Proximate Analysis, %			
Moisture	-	12.0	30.4
Volatile Matter	-	33.0	31.1
Fixed Carbon	-	39.0	32.1
Ash	-	16.0	6.4
Ultimate Analysis, %			
Ash	9.6	16.0	6.4
Sulfur	3.9	4.0	0.48
Hydrogen	5.9	3.7	3.4
Carbon	59.6	57.5	47.85
Nitrogen	1.0	0.9	0.62
Chlorine	-	0.1	0.03
Oxygen	20.0	5.8	10.83
Moisture	-	12.0	30.40
Higher Heating Value, Btu/lb	10,788	10,100	8,020

DOLOMITE ANALYSES

	GE	EPRI
$CaCO_3$	-	53.9
$MgCO_3$	-	41.4
CaO	30.7	-
MgO	20.4	-
CO_2	46.2	-
H_2O	1.0*	1.0
SiO_2 + Inerts	1.7	3.7

*As Fed (10% as received)

Table 5-3

GE PFBC PLANT
ECONOMIC ANALYSES SUMMARY

	GE 680 MW Base Plant As-Reported	EPRI/GE 1360 MW PFB Eastern Coal	Reference PCF Plant Eastern Coal	EPRI/GE 1360 MW PFB Western Coal	Reference PCF Plant Western Coal
PLANT PERFORMANCE DATA					
Steam Turbine Gross Output, MW	524.5	1,049.0	1,136.0	1,049.0	1,136.4
Gas Turbine Gross Output, MW	154.2	308.4	-	308.4	-
Plant Gross Output, MW	678.7	1,357.4	1,136.4	1,357.4	1,136.4
Auxiliary Load, MW	20.4	41.2	64.4	40.0	59.27
Plant Net Output, MW	658.3	1,316.2	1,072.1	1,317.4	1,077.16
Net Plant Heat Rate, Btu/kWh	8,446	8,467	9,741	8,339	9,694
SO_2 Emission Reduction, %	90	90	90	70	70
Ca/S Molar Ratio	1.5	1.5	1.02	0.8	1.3
MATERIALS CONSUMPTION/PRODUCTION					
Coal, t/h	257.7	551.7	517.0	684.9	651
Dolomite, t/h	86.7	190.4	-	15.2	-
Limestone, t/h	-	-	66.6	-	10.93
Dry Sludge, t/h	93.1	242.0	82.92	60.2	41.64
Wet Sludge, t/h	-	-	86.43	-	14.28
Water Consumption, gpm	5,400	10,800	13,000	10,800	13,000
COSTS (Mid-1978 dollars)					
Process Capital, $/kW	-	448	476	430	461
Total Plant Investment, $/kW	-	566	605	550	584
Total Capital Requirement, $/kW	925 (1)	669	734	639	706
30-Year Levelized Busbar Power Cost, (1979-2008), mills/kWh	38 (1)	46	50	40	45

Note (1) Escalated to 1984 dollars

Table 5-4

GE PFBC PLANT
TOTAL CAPITAL REQUIREMENTS (Mid-1978 $1000)

FPC Account No.	GE 679 MW Base Plant As-Reported	EPRI/GE 1360 MW PFB Eastern Coal	Reference PCF Plant Eastern Coal	EPRI/GE 1360 MW PFB Western Coal	Reference PCF Plant Western Coal
311 Structures and Improvements	12,500	24,107	46,605	24,107	46,311
312 Boiler Plant Equipment	123,000	254,154	284,699	231,410	271,597
314 Turbogenerator Units	95,600	208,040	108,480	208,040	108,480
315 Accessory Electrical Equipment	25,000	58,163	32,490	58,163	32,490
316 Miscellaneous Plant Equipment	2,600	4,677	3,734	4,677	3,734
353 Station Equipment	3,500	7,578	5,742	7,578	5,742
Total Direct Construction Cost	262,200	556,710	481,750	533,975	468,354
Undistributed Construction Cost	52,400	33,402	28,910	32,038	28,101
Process Capital	314,600	590,112	510,660	566,013	496,455
Engineering and Home Office	26,200	55,671	48,175	53,397	46,835
Project Contingency	52,500	96,867	83,825	92,911	81,494
Process Contingency	-	11,780	6,190	11,780	4,260
Total Plant Investment	393,300	754,430	648,849	724,101	629,044
Preproduction Costs	-	21,008	17,931	18,348	16,211
Inventory Capital	-	10,872	9,328	8,576	8,066
AFDC	215,600 (2)	92,040	107,708	88,340	104,421
Land and Land Acquisition	-	2,000	2,700	2,000	2,200
Total Capital Requirement	608,900	880,350	786,512	841,365	759,942
Unit Cost, $/kW net	925 (1)	669	734	639	706

Note (1) 1984 dollars

(2) Includes escalation and interest during construction to 1984

Table 5-5

GE PFBC PLANT
PLANT OPERATING COSTS

	GE 679 MW[1] Base Plant As-Reported	EPRI/GE 1360 MW PFB Eastern Coal	Reference PCF Plant Eastern Coal	EPRI/GE 1360 MW PFB Western Coal	Reference PCF Plant Western Coal
First Year Fixed Operating Costs					
Operating Labor, $/kWyr	-	3.49	2.67	3.49	2.65
Maintenance Labor, $/kWyr	-	1.82	1.95	1.82	1.94
Maintenance Materials	-	6.20	6.62	6.19	6.59
Administration and Support Labor, $/kWyr	-	1.60	1.38	1.59	1.38
Total First Year Fixed O&M, $/kWyr	-	13.11	12.62	13.10	12.56
First Year Variable Operating Cost (Excluding Fuel) (Mid-1978 dollars)					
Water, mills/kWh	-	0.20	0.29	0.20	0.29
Chemicals (Limestone or Dolomite), mills/kWh	-	1.45	0.62	0.12	0.10
Other Consumables, mills/kWh	-	0.15	0.15	0.15	0.15
Waste Disposal (wet and dry), mills/kWh	-	0.74	1.34	0.18	0.44
Total First Year Variable Operating Costs (Excluding Fuel), mills/kWh	-	2.54	2.40	0.65	0.98
First Year Fuel Costs, mills/kWh	-	9.16	10.54	8.09	9.40
30-Year Levelized Fixed Charges, $/kWyr	-	120.4	132.05	114.96	126.99
30-Year Levelized Costs (1979-2008)					
Limestone or Dolomite, mills/kWh	-	2.73	1.17	0.22	0.19
Waste Disposal, mills/kWh	-	1.39	2.53	0.34	0.83
Water, mills/kWh	-	0.37	0.55	0.37	0.55
Other Consumables, mills/kWh	-	0.28	0.28	0.28	0.28
Total Variable O&M, mills/kWh	-	4.77	4.54	1.22	1.85
Fixed O&M, mills/kWh	-	4.03	3.88	4.03	3.86
Fixed Charges, mills/kWh	-	19.63	21.54	18.75	20.71
Subtotal, mills/kWh	-	28.43	29.95	24.00	26.42
Fuel Costs, mills/kWh	-	17.73	20.40	16.07	18.68
Busbar Power Cost, mills/kWh	38.0	46.16	50.35	40.07	45.10

Note: (1) 1984 dollars

The as-reported cost breakdown given in Table 5-4 includes a $52 million charge under Undistributed Construction Costs. This charge is made up of allowances of 15% and 5% of direct costs for items termed by I&SE as "Construction Facilities" and "Other Costs", respectively. The labor costs delineated by the I&SE method have been developed using a labor rate of $14/hr. This value does not include an allowance for indirect labor costs, assumed as 90% of the basic labor rate by the other two methods used by GE. Thus, the as-reported direct construction costs should be increased by approximately $40 million which would result in a cost similar to those derived by the Sterns-Roger Engineering method.

The $215 million indicated under AFDC is, in fact, an allowance made by GE for interest and escalation during construction. This is derived by using an interest rate of 6.5% compounded monthly and an escalation rate of 10% also compounded monthly, against the total plant investment cost of $393 million. By contrast, the EPRI method assumes an average interest rate over the construction period, which, for the PFB plant, is 12.2% of the total plant investment.

Estimates of auxiliary power loads for the GE base plant and the 1360 MW eastern and western coal fired plants are given in Table 5-6, based on the total auxiliary load reported by GE.

EPRI NOMINAL 1360 MW PFBC EASTERN COAL PLANT

The results of the economic assessment of the nominal 1360 MW plant, derived from the GE design and operating on EPRI eastern coal, are shown on Tables 5-3, 5-4 and 5-5. These tables show a total capital requirement of $669/kW and a busbar power cost of 46 mills/kWh. Compared with the reference PCF plant operating on EPRI eastern coal, this plant is very competitive, showing a 10% saving in capital cost and an 8% saving in busbar power cost.

The GE plant is designed for 680 MW gross output. It has been assumed for this analysis, that the nominal 1360 MW plant would consist of two 680 MW plants with common coal, dolomite and ash handling systems. The upgrading of the GE 680 MW plant cost estimate was conducted in three stages:

Table 5-6

ESTIMATED AUXILIARY LOADS (kW)

	GE 679 MW Plant	EPRI 1357 MW Eastern Coal	EPRI 1357 MW Western Coal
Coal Mills	1,510	3,240	4,020
Condensate Pumps	1,200	2,400	2,400
Cooling Water Pumps	460	920	920
Boiler Feed Pumps	2,500	5,000	5,000
Air Compressors	3,250	6,500	6,500
Circulating Water Pumps	4,000	8,000	8,000
Vacuum Pumps	50	100	100
Cooling Tower Fans	1,100	2,200	2,200
Make-up Water Pumps	400	800	800
Coal & Dolomite Handling	410	880	830
Building Services	50	100	100
Waste Disposal	970	2,520	630
Transformer Losses	3,000	6,000	6,000
Lighting	1,000	1,500	1,500
Miscellaneous	500	1,000	1,000
TOTAL	20,400	41,160	40,000

- Scaling for increase in capacity
- Modifying costs to account for different labor rates ($14/hr vs. $23.75/hr)
- Scaling for differences in coal analysis.

The multipliers used for scaling for increase in capacity are shown on Table 5-7. This process was based upon using a multiplier of 2 for equipment doubled in quantity and a scaling factor of 0.6 for shared equipment. Account 312 includes PFBC, coal, dolomite and waste handling, of which only the PFBC may be considered to be doubled in quantity. From the cost estimates included in the GE report for the GE/ECAS and SRE evaluation methods, it was possible to determine the cost of each of these categories. This showed that the coal and dolomite systems comprised 17% of the cost of Account 312, the waste handling 23% and the PFBC 60%. The net result of scaling for increase in capacity shows a 6% saving in unit cost by doubling the plant size.

The GE/I&SE costs are based on a labor rate of $14/hr. However, this method did not allow for indirect labor costs which was assumed as 90% of direct labor costs by the other GE methods, giving a net labor rate of $26.60/hr. Hence, levelizing the labor cost using the EPRI labor rate of $23.75, which includes indirect costs, has a significant effect. The GE/I&SE estimate shows a labor cost of $57.8 million whereas using the EPRI labor rate shows a cost of $98 million. These changes are also noted on Table 5-7.

The adjustments required for the different eastern coal analyses are shown on Table 5-8. These adjustments affect only Account 312 with different multipliers used for coal and dolomite, waste and balance of plant. The GE report did not provide a breakdown of Account 312. Thus, for this evaluation it was assumed that these components contributed to Account 312 as follows:

- Coal and dolomite systems - 17%
- Waste handling system - 23%
- Balance of equipment - 60%

Table 5-7

ADJUSTMENTS TO GE COSTS FOR
LABOR RATE CHANGE AND CAPACITY INCREASE
(Mid-1978 $1000)

FPC Account	Item	GE Material Cost	GE Labor Manhours	Labor Cost at EPRI Rate	Total GE Base Cost	Plant Size Increase Multiplier	1360 MW Base Plant Cost
310	Land	-	-	-	-	-	2,000
311	Structures & Improvements	7,600	350	8,312	15,912	1.515	24,107
312	Boiler Plant Equipment						
	Coal & Dolomite	14,620	355	8,431	23,051	1.515	34,922
	Waste Handling	19,780	481	11,424	31,204	1.515	47,274
	PFBC	51,600	1,250	29,688	81,288	2	162,576
314	Turbogenerator Units	83,500	864	20,520	104,020	2	208,040
315	Accessory Electrical Equipment	14,500	750	17,813	32,313	1.8	58,163
316	Miscellaneous Plant Equipment	1,900	50	1,187	3,087	1.515	4,677
353	Station Equipment	3,100	29	689	3,789	2	7,578
	Total (excluding land)						547,337

Table 5-8

ADJUSTMENTS TO 1360 MW BASE
PLANT COSTS FOR DIFFERENT EASTERN
COAL ANALYSIS
(Mid-1978 $1000)

FPC Account		Costs From Table 5-7	Coal Type Multiplier	EPRI/GE 1360 MW Plant Eastern Coal
310		2,000	1	2,000
311		24,107	1	24,107
312	Coal & Dolomite	34,922	1.04	36,308
	Waste Handling	47,274	1.17	55,270
	PFBC	162,576	1	162,576
				254,154
314		208,040	1	208,040
315		58,163	1	58,163
316		4,677	1	4,677
353		7,578		7,578
Total (excluding land)		547,337		556,710

The resultant cost of the first two components were then adjusted by the ratio of the flows to the 0.6 power. The last cost component was not adjusted.

The Process Contingency for the GE design was derived from data presented in Table 1 of the GE report. This shows the costs attributable to "PFB Steam Generators" to be $64.7 million for the 680 MW plant and includes a multiplier of 90% for indirect labor. Correcting for EPRI labor rate of $23.75/hr reduces this cost to $58.9 million. This value was used for the process contingency and doubled for the 1360 MW plant design.

EPRI NOMINAL 1360 MW PFBC WESTERN COAL PLANT

The results of the economic assessment of the nominal 1360 MW plant derived from the GE design and operating on EPRI western coal are shown in Tables 5-3, 5-4 and 5-5. These indicate a total capital requirement of $639/kW and a busbar power cost of 40 mills/kWh. In comparison with the reference PCF plant operating on western coal, this PFBC plant shows savings of 9.5% in total capital requirement and 11% in busbar power cost.

This analysis used, as a starting point, the values given in Table 5-7 with subsequent scaling for use of EPRI western coal. These adjustments are shown in Table 5-9 and indicate an overall reduction in unit cost of 4%.

As with the EPRI eastern coal, a greater quantity of western coal must be burned to compensate for the difference in heating values. The HHV for EPRI western coal is 8020 Btu/lb, as compared to 10,788 Btu/lb for the GE coal. The sulfur content of the western coal is 0.48 percent, compared to the 3.9% of the GE coal. Hence, a reduction in dolomite consumption is realized with the western coal. Furthermore, the required calcium to sulfur mole ratio is reduced to 0.8 for the western coal (1.5 is used for the GE coal).

CONCLUSIONS

The results summarized in Table 5-3 indicate that the 1360 MW PFB plant offers significant savings over the reference PCF plant operating on both eastern and western coal. The estimated savings in busbar power cost are 8% and 13% for eastern coal and western coal, respectively.

Table 5-9

ADJUSTMENTS TO 1360 MW BASE
PLANT COSTS FOR WESTERN COAL ANALYSIS
(Mid-1978 $1000)

FPC Account		Costs From Table 5-7	Coal Type Multiplier	EPRI/GE 1360 MW Plant Western Coal
310		2,000	1	2,000
311		24,107	1	24,107
312	Coal & Dolomite	34,922	1.186	41,415
	Waste Handling	47,274	0.508	27,419
	PFBC	162,576	1	162,576
				231,410
314		208,040	1	208,040
315		58,163	1	58,163
316		4,677	1	4,677
353		7,578	1	7,578
Total (excluding land)		547,337		533,975

A large cost differential between the PFBC plant and the PCF unit is evident in FPC Account 312. The cost of the GE eastern coal-fired PFB boiler is 175 $/kW compared to the eastern coal-fired PCF unit cost of 266 $/kW. This difference of 91 $/kW, along with add-ons based on the total direct construction costs, essentially accounts for the difference in plant costs. A similar difference exists for the western coal-fired units and may be attributed, in part, to the selection by GE of a supercritical steam cycle.

Section 6

AEP/STAL-LAVAL POWER PLANT

SYSTEM DESIGN

In 1976, the American Electric Power Service Corporation (AEP), STAL-Laval Turbin A.B. (S-L) of Sweden and Babcock and Wilcox Ltd. (BWL) of Great Britain initiated a privately funded development program to determine the technical and economical feasibility of utilizing PFBC for electric power generation. Under Phase II of this program a preliminary design and cost estimate for a 500 MW commercial plant is to be developed. Phase II is scheduled to be completed in December 1979 and hence the assessment presented here is based upon preliminary and unpublished data supplied by AEP (9), which may be revised during the remainder of the Phase II program.

The proposed AEP/S-L power plant is a nominal 512 MW and is shown schematically in Figure 6-1 (8). The plant comprises two PFBC/gas turbine modules (each 71 MW) supplying steam to a common steam turbine (370 MW). Each PFBC/gas turbine module consists of a three shaft STAL-Laval GT-120 gas turbine and a dedicated PFBC. The steam turbine cycle operates with steam at 2600 psig, 1000°F with reheat to 1000°F. The PFB combustors are fed from common coal and dolomite receiving, storage and feed systems. The plant arrangement proposed by AEP is not available at this time. It was assumed that property requirements will be the same as required for the PCF plant.

EVALUATION PARAMETERS

AEP used its own internal evaluation parameters for developing its preliminary cost analysis. A comparison of the EPRI and AEP parameters is presented in Table 6-1. The major differences are:

- AEP used an eastern coal with a cost of $1.65/million Btu compared with EPRI eastern coal cost of $1.08/million Btu.

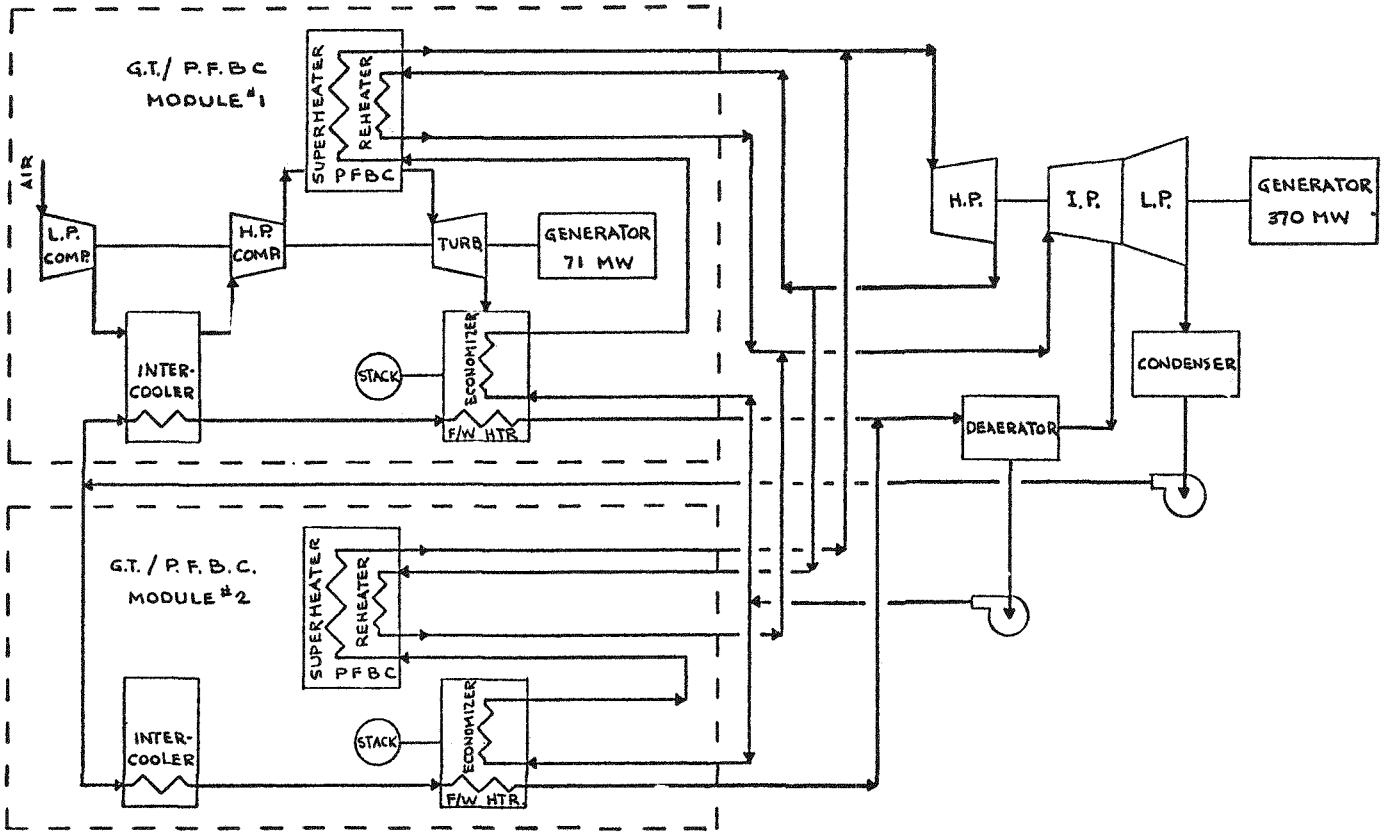

Figure 6-1. Flow Schematic AEP/Stal-Laval PFBC Power Plant Nominal 512 MW Output

Table 6-1

ECONOMIC FACTORS

	AEP	EPRI
Plant Life, Years	33-1/3	30
Capacity Factor	0.7	0.7
Project Contingency, %	(1)	15.0
Process Contingency, %	-	10.0
Interest, %	8.0	8.0
Discount Rate, %	10.0	10.0
Levelized Fixed Charge Rate, %	16.5	18.0
Inflation Rate, %	8.0	6.0
AFDC, %	8.0	16.6
Plant Construction Period, Years	4	4
Labor Rate, $/hr	25.00	23.75
Unit Costs		
Western Coal, $/t	-	15.56
Eastern Coal, $/t	33.00	21.86
Limestone, $/t	8.00	10.00
Dolomite, $/t	8.00	10.00
Waste Disposal - Dry	4.00	4.00
- Wet	9.5	8.50
Land, $/acre	-	5000
Water, $/1000 gal.	0.50	0.40
Levelization Factors		
Coal Costs - Western	-	1.986
- Eastern	-	1.935
Operating Costs	-	1.886
Base Cost Year	1979	mid-1978

(1) 20% for accounts 312 & 314, 5% for accounts 311, 315, 316, 353.

- AEP costs are in 1979 dollars and are not levelized over 30 years.
- AEP dolomite cost is $8.00/ton compared with EPRI cost of $10.00/ton.
- AEP did not include an allowance for AFDC. However, AEP has included an item termed Engineering Expenses and Overhead which is large enough to cover EPRI's Engineering and Home Office and AFDC allowances together.

The AEP evaluation was based upon using an eastern coal with an analysis as shown on Table 6-2. It should be noted that values for ash, sulfur, moisture and heating value were actually rounded upward by AEP for design and evaluation purposes. Similarly, the dolomite analysis used by AEP is shown on Table 6-2.

The results of the economic analysis are summarized in Table 6-3 which includes, for comparison purposes, the AEP as-reported evaluation results and the reference 1000 MW PCF plant data. Table 6-4 presents the capital requirement estimates including a breakdown by FPC account number and Table 6-5 presents the plant operating costs.

AS-REPORTED AEP/S-L BASE CASE ANALYSIS

The data received from AEP is presented in Tables 6-3, 6-4 and 6-5 and indicates a plant capital cost of 695.4 $/kW and a busbar power cost of 35.6 mills/kWh. These costs are in 1979 dollars and the busbar power cost was not levelized over the life of the plant.

The AEP capital costs do not include the additional allowances made by EPRI for Undistributed Construction Costs and Preproduction Costs. Although AEP procedures do not include allowances for Process Contingency and AFDC, sufficient funds were included in the category Engineering and Home Office to make up the difference.

The relatively low busbar power cost can be attributed to a number of factors:

- AEP did not levelize fuel and dolomite costs over 30 years. These costs were calculated in 1979 dollars.
- The fixed charge rate used by AEP is 16.5% compared with 18% used by EPRI.

Table 6-2

COAL ANALYSES

	AEP	EPRI Eastern	EPRI Western
Proximate Analysis, %			
Moisture	5.5	12.0	30.4
Volatile Matter	30.7	33.0	31.1
Fixed Carbon	43.8	39.0	32.1
Ash	20.0	16.0	6.4
Ultimate Analysis, %			
Ash	13.6 (20)*	16.0	6.4
Sulfur	3.6 (4.0)*	4.0	0.48
Hydrogen	4.2	3.7	3.4
Carbon	65.8	57.5	47.85
Nitrogen	1.1	0.9	0.62
Chlorine	-	0.1	0.03
Oxygen	7.0	5.8	10.83
Moisture	5.4 (15)*	12.0	30.40
Higher Heating Value, Btu/lb	12,000 (10,000)*	10,100	8,020

DOLOMITE ANALYSES

	AEP	EPRI
$CaCO_3$	51.36	53.9
$MgCO_3$	46	41.4
H_2O	-	1.0
SiO_2 + Inerts	0.9	3.7
Al_2O_2	1.36	-
Fe_2O_3	1.33	-
S	0.19	-

*Values used in AEP evaluation.

Table 6-3

AEP PFBC PLANT
ECONOMIC ANALYSES SUMMARY

	AEP/S-L[1] 512 MW Plant As-Reported	EPRI/AEP 1000 MW PFB Eastern Coal	Reference PCF Plant Eastern Coal	EPRI/AEP 1000 MW PFB Western Coal	Reference PCF Plant Western Coal
PLANT PERFORMANCE DATA					
Steam Turbine Gross Output, MW	369.6	739.2	1,136.4	739.2	1,136.4
Gas Turbine Gross Output, MW	142.4	284.8	-	284.8	-
Plant Gross Output, MW	512.0	1,024.0	1,136.4	1,024.0	1,136.4
Auxiliary Load, MW	14.4	28.9	64.4	28.2	59.27
Plant Net Output, MW	497.6	995.1	1,072.1	995.8	1,077.16
Net Plant Heat Rate, Btu/kWh	8,640	8,640	9,741	8,634	9,694
SO_2 Emission Reduction, %	90	90	90	70	70
Ca/S Molar Ratio	1.5	1.5	1.02	0.8	1.0
MATERIALS CONSUMPTION/PRODUCTION					
Coal, t/h	221.7	425.6	517.0	536.0	651.0
Dolomite, t/h	77.6	148.0	-	11.9	-
Limestone, t/h	-	-	66.6	-	10.93
Dry Sludge, t/h	121.9	181.6	82.92	44.56	41.64
Wet Sludge, t/h	-	-	86.43	-	14.28
Water Consumption, gpm	3,200	6,400	13,000	6,400	13,000
COSTS (Mid-1978 dollars)					
Process Capital, $/kW	-	431	476	424	461
Total Plant Investment	-	551	605	543	584
Total Capital Requirement, $/kW	695	644	734	632	706
30-Year Levelized Busbar Power Cost, (1979-2008), mills/kWh	35.6[2]	45	50	40	45

Note: (1) All costs are in 1979 dollars.
(2) Cost not levelized.

Table 6-4

AEP PFBC PLANT
TOTAL CAPITAL REQUIREMENTS (Mid-1978 $1000)

FPC Account No.	AEP/S-L[1][2] 512 MW Plant As-Reported	EPRI/AEP 1000 MW PFB Eastern Coal	Reference PCF Plant Eastern Coal	EPRI/AEP 1000 MW PFB Western Coal	Reference PCF Plant Western Coal
311 Structures & Improvements	22,845	32,816	46,605	32,816	46,311
312 Boiler Plant Equipment	115,175	205,262	284,699	199,682	271,597
314 Turbogenerator Units	56,291	106,747	108,480	106,747	108,480
315 Accessory Electrical Equipment	29,546	50,427	32,490	50,427	32,490
316 Miscellaneous Plant Equipment	2,496	3,585	3,734	3,585	3,734
353 Station Equipment	2,877	5,486	5,742	5,486	5,742
Total Direct Construction Cost	229,230	404,293	481,750	398,743	468,354
Undistributed Construction Cost	-	24,287	28,910	23,924	28,101
Process Capital	229,230	428,580	510,660	422,667	496,455
Engineering and Home Office	75,289	40,431	48,179	39,827	46,835
Project Contingency	37,175	70,353	83,825	69,377	81,494
Process Contingency	-	8,996	6,185	9,002	4,260
Total Plant Investment	341,694	548,360	648,849	540,918	629,044
Preproduction Costs	-	15,394	17,931	13,672	16,211
Inventory Capital	5,000	8,329	9,328	6,632	8,066
AFDC	-	66,900	107,708	65,992	104,421
Land and Land Acquisition	1,000	2,000	2,700	2,000	2,200
Total Capital Requirement	347,694	640,983	786,512	629,214	759,942
Unit Cost, $/kW net	695	644	734	632	706

Notes: (1) FPC accounts 391,397 and 398 listed separately by AEP are included in 316
FPC account 317 delineated by AEP as Engineering Expenses and Overheads has been placed in item Engineering and Home Office
Spare Parts costs have been placed in item Inventory Capital
(2) All costs are in 1979 dollars

Table 6-5

AEP PFBC PLANT
PLANT OPERATING COSTS

	AEP/S-L 512 MW Plant As-Reported	EPRI/AEP 1000 MW PFB Eastern Coal	Reference PCF Plant Eastern Coal	EPRI/AEP 1000 MW PFB Western Coal	Reference PCF Plant Western Coal
First Year Fixed Operating Costs					
Operating Labor, $/kWyr	-	3.52	2.67	3.51	2.65
Maintenance Labor, $/kWyr	-	1.61	1.95	1.61	1.94
Maintenance Materials	-	5.47	6.62	5.46	6.59
Administration and Support Labor, $/kWyr	-	1.54	1.38	1.54	1.38
Total First Year Fixed O&M, $/kWyr	-	12.14	12.62	12.12	12.56
First Year Variable Operating Cost (Excluding Fuel) (Mid-1978 dollars)					
Water, mills/kWh	-	0.15	0.29	0.15	0.29
Chemicals (Limestone or Dolomite), mills/kWh	-	1.49	0.62	0.12	0.10
Other Consumables, mills/kWh	-	0.15	0.15	0.15	0.15
Waste Disposal (wet and dry), mills/kWh	-	0.73	1.34	0.18	0.44
Total First Year Variable Operating Costs (Excluding Fuel), mills/kWh	-	2.52	2.40	0.60	0.98
First Year Fuel Costs, mills/kWh	-	9.35	10.54	8.38	9.40
30-Year Levelized Fixed Charges, $/kWyr	-	115.93	132.05	113.74	126.99
30-Year Levelized Costs (1979-2008)					
Limestone or Dolomite, mills/kWh	1.1 (1)	2.81	1.17	0.23	0.19
Waste Disposal, mills/kWh	-	1.38	2.53	0.34	0.83
Water, mills/kWh	-	0.29	0.55	0.29	0.55
Other Consumables, mills/kWh	-	0.28	0.28	0.28	0.28
Total Variable O&M, mills/kWh	1.1	4.76	4.54	1.14	1.85
Fixed O&M, mills/kWh	-	3.73	3.88	3.73	3.86
Fixed Charges, mills/kWh	20.2	18.91	21.54	18.55	20.71
Subtotal, mills/kWh	21.3	27.39	29.95	23.41	26.42
Fuel Costs, mills/kWh	14.3 (1)	18.09	20.40	16.63	18.68
Busbar Power Cost, mills/kWh	35.6	45.49	50.35	40.05	45.10

Note: (1) These costs are in 1979 dollars and are not levelized over the life of the plant.

- AEP did not calculate fixed O&M charges. However, AEP did identify dollars required for Fixed Maintenance. These costs do not appear to have been considered in the busbar power cost calculated by AEP.

- AEP did not include an allowance for waste disposal.

Coal, dolomite and waste flows were calculated from performance data given by AEP using a Ca/S molar ratio of 2. These flows and AEP cost factors result in 1979 coal and dolomite costs of 12.9 mills/kWh and 1.09 mills/kWh, respectively. These costs are consistent with AEP costs of 13 mills/kWh for coal (the 14.3 mills/kWh listed in Table 6-5 includes 1.3 mills/kWh for oil used for coal drying) and 1.1 mills/kWh for dolomite. Water consumption was assumed to be, primarily, cooling tower and steam cycle make-up requirements. The cooling tower make-up was assumed to be 1.5% of the circulating water flow which was calculated from condenser heat load (given by AEP as 540 MW) and a temperature rise of $18^{o}F$. Steam cycle make-up was taken as 2.5% of the steam flow, given by AEP as 2.1×10^{6} lbs/hr. An additional miscellaneous allowance was included to give a total consumption rate of 3200 gpm for the 512 MW plant.

EPRI NOMINAL 1000 MW PFBC EASTERN COAL PLANT

The results of the economic assessment of the nominal 1000 MW plant, derived from the AEP design operating on EPRI eastern coal, are shown on Tables 6-3, 6-4 and 6-5. These indicate a total capital requirement of $644/kW and a busbar power cost of 45 mills/kWh. Compared with the reference PCF unit operating on EPRI eastern coal, this plant is shown to be very competitive being 12% less expensive in capital cost and 10% less expensive in busbar power cost.

The AEP plant is designed for 512 MW gross output. It has been assumed for this analysis that the nominal 1000 MW plant consists of two 512 MW plants with common coal, dolomite and ash handling systems. The upgrading of the AEP 512 MW plant cost estimate was conducted in four stages:

- Scaling for increase in capacity

- Converting costs from 1979 to mid-1978 dollars

- Modifying costs to account for different labor rates ($25/hr vs. $23.75/hr)
- Scaling for differences in coal analysis.

The results of scaling for increase in capacity are shown on Table 6-6. This process was based upon using a multiplier of 2 for equipment doubled in quantity and a scaling factor of 0.6 for shared equipment. As Account 312 includes PFBC, coal, dolomite and waste handling, which require different multipliers, it was assumed that the PFBC, with a multiplier of 2, comprised approximately 75% of the account. This exercise indicates a 7% saving in unit cost by doubling the plant size.

To be consistent with the EPRI guidelines, the costs given by AEP must be converted to mid-1978 dollars. Based on a 6% per annum inflation rate, a multiplier of 0.97 was used to account for the six month difference and the results are also shown on Table 6-6.

The AEP costs are based upon an average labor rate of $25/hr. These costs were adjusted to reflect an average labor rate of $23.75/hr as used in the EPRI procedures. Actual labor hours were not readily available, but AEP advised that direct construction costs were made up of 45% labor and 55% equipment. This resulted in an overall reduction of 2.25% in costs assumed to be pro-rated for each account, as shown on Table 6-6.

The adjustments required for the different eastern coal analyses are shown on Table 6-7. These adjustments affect only Account 312 with different multipliers required for coal, dolomite, waste and PFBC components. It was assumed that the cost for these systems was split as shown on Table 6-6. The result of these adjustments was to add $650,000 to the direct construction costs.

The Process Contingency for the AEP plant was calculated by assuming that the advanced technology components made up a similar percentage of Account 312 as the GE design. This resulted in a process contingency of $117.8 million for the nominal 1000 MW plant.

Table 6-6

ADJUSTMENTS TO AEP COSTS FOR
CAPACITY INCREASE, BASE YEAR
AND LABOR RATES
(Mid-1978 $1000)

FPC Account	Item	AEP Base Cost	Plant Size Increase Multiplier	Mid-1978 Cost Multiplier	Labor Rate Change Multiplier	1000 MW Base Plant Cost
310	Land	1,000	2	-	-	2,000
311	Structures and Improvements	22,845	1.515	0.97	0.9775	32,845
312	Boiler Plant Equipment					
	Coal Handling	19,500	1.515	0.97	0.9775	28,011
	Waste Handling	3,000	1.515	0.97	0.9775	4,309
	Dolomite Handling	7,500	1.515	0.97	0.9775	10,774
	PFBC	85,175	2	0.97	0.9775	161,522
314	Turbogenerator Units	56,291	2	0.97	0.9775	106,747
315	Accessory Electrical Equipment	29,546	1.8	0.97	0.9775	50,472
316	Miscellaneous Plant Equipment	2,496	1.515	0.97	0.9775	3,585
353	Station Equipment	2,877	2	0.97	0.9775	5,456
	Total (excluding land)					403,721

Table 6-7

ADJUSTMENTS TO 1000 MW BASE
PLANT COST FOR DIFFERENT EASTERN
COAL ANALYSES
(Mid-1978 $1000)

FPC Account		Costs From Table 6-6	Coal Use Multiplier	EPRI/AEP 1000 MW Plant Eastern Coal
310		2,000	1	2,000
311		32,816	1	32,816
312	Coal	28,011	1.08	30,252
	Waste	4,309	0.93	4,007
	Dolomite	10,774	0.88	9,481
	PFBC	161,522	1	161,522
				205,262
314		106,747	1	106,747
315		50,427	1	50,427
316		3,585	1	3,585
353		5,456	1	5,456
Total	(excluding land)	403,721		404,293

EPRI NOMINAL 1000 MW PFBC WESTERN COAL PLANT

The results of the economic assessment of the nominal 1000 MW plant derived from the AEP design and operating on EPRI western coal are shown in Tables 6-3, 6-4 and 6-5. These indicate a total capital requirement of $632/kW and a busbar power cost of 40 mills/kWh. In comparison with the reference PCF plant operating on western coal, the savings are 10% in capital costs and 11% in busbar power cost.

This analysis used, as a starting point, the costs delineated in Table 6-6 with subsequent scaling for use of the EPRI western coal. These changes are shown in Table 6-8 and indicate an overall reduction in capital costs of 1.5%. The auxiliary power requirement was also adjusted to account for the changes in coal, dolomite and waste flows.

CONCLUSION

In comparison with the reference PCF plant, the AEP commercial design shows potential significant savings in both capital and busbar power costs. For eastern coal the AEP design shows savings of 12% and 10% in capital and busbar power costs, respectively. For western coal, the savings are 10% and 11%, respectively.

The savings in capital costs realized by the AEP design, on both eastern and western coal, may be attributed in part to the significant differences in costs assigned to FPC Account 312. As noted on Table 6-4, the Direct Construction Costs for the AEP designs show savings of $77 million for eastern coal and $91 million for western coal. It should be noted, however, that the PCF unit is of larger capacity and thus the relative unit costs and fixed charges do not reflect such a great difference.

For eastern coal, a comparison of the fixed charges shows the PCF plant costs to be higher by 2.6 mills/kWh which can be attributed to the higher efficiency of the AEP design (8640 Btu/kWh vs. 9741 Btu/kWh). The net result of this is that the AEP design shows a savings in busbar power cost of 6 mills/kWh.

Table 6-8

ADJUSTMENTS TO 1000 MW BASE
PLANT COST FOR WESTERN
COAL ANALYSIS
(Mid-1978 $1000)

FPC Account		Costs From Table 6-6	Coal Use Multiplier	EPRI/AEP 1000 MW Plant Western Coal
310		2,000	1	2,000
311		32,816	1	32,816
312	Coal	28,011	1.24	34,734
	Waste	4,309	0.22	948
	Dolomite	10,774	0.2	2,155
	PFBC	161,522	1.002	161,845
				199,682
314		106,747	1	106,747
315		50,427	1	50,427
316		3,585	1	3,585
353		5,486	1	5,486
Total	(excluding land)	403,721		398,743

Section 7

REFERENCE PCF PLANTS WITH WET FGD SYSTEMS

SITE DESCRIPTION

Figure 7-1 presents the site plan for the nominal 1000 MW PCF plant. The PCF plant site encompasses an area of approximately 440 acres with a river running along its east border, and a diked area of 110 acres utilized for scrubber sludge and ash pond. An additional diked area of 20 acres is used for the drain water hold-up pond. The plant includes a barge unloading facility, coal handling equipment and limestone handling equipment.

Figure 7-2 presents the plant island arrangement of the plant. The plant structures are in a south-north line, starting with the electrical switchyard at the south fence line. The transformer yard is north of and adjacent to the switchyard followed by the turbine generator-service building and boiler structures. North of the PCF boilers are the electrostatic precipitators, I.D. fans, FGD systems and stacks. To the east of these structures are the make-up water treatment area, condensate tank, pretreatment area, fuel oil storage tank and water tank. Further east are located the sewage treatment plant, dewatering system, pH trim tank and water treatment equalization basins. The cooling towers are oriented with their longitudinal axis in a north-south direction for optimum utilization of the prevailing winds.

BOILER DESCRIPTION

The boiler area encompasses the PCF steam generator, the coal bunkers, pulverizers and feed system, forced draft fans, air preheaters, deaerator and its storage tank, closed cooling water head tank and the flash tank for continuous blowdown - all housed within the boiler building. In order to reduce the external noise emanating from the forced draft (F.D.) fans, the fans are installed in a separate walled area provided with sound attenuating louvers and other acoustical treatment.

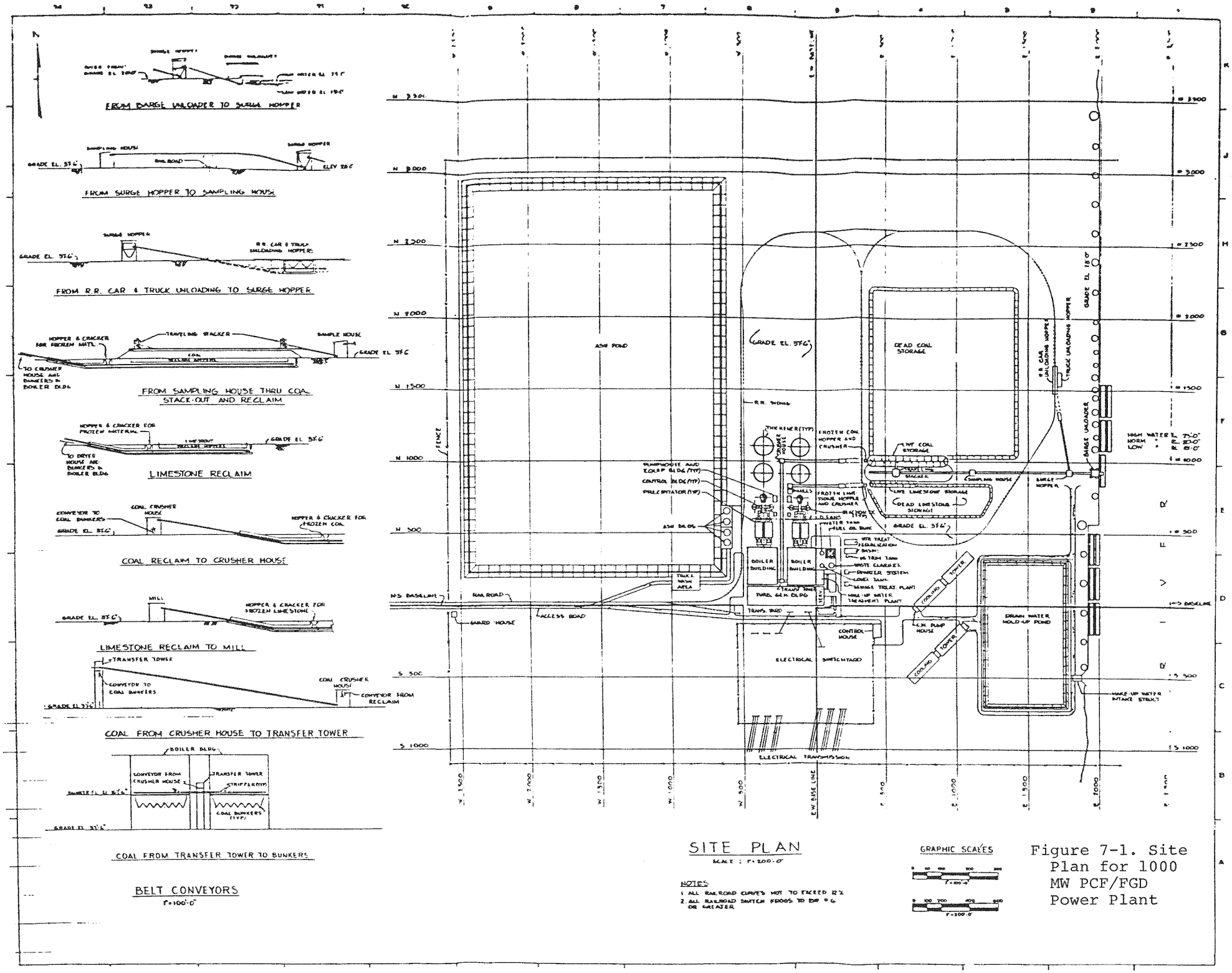

Figure 7-1. Site Plan for 1000 MW PCF/FGD Power Plant

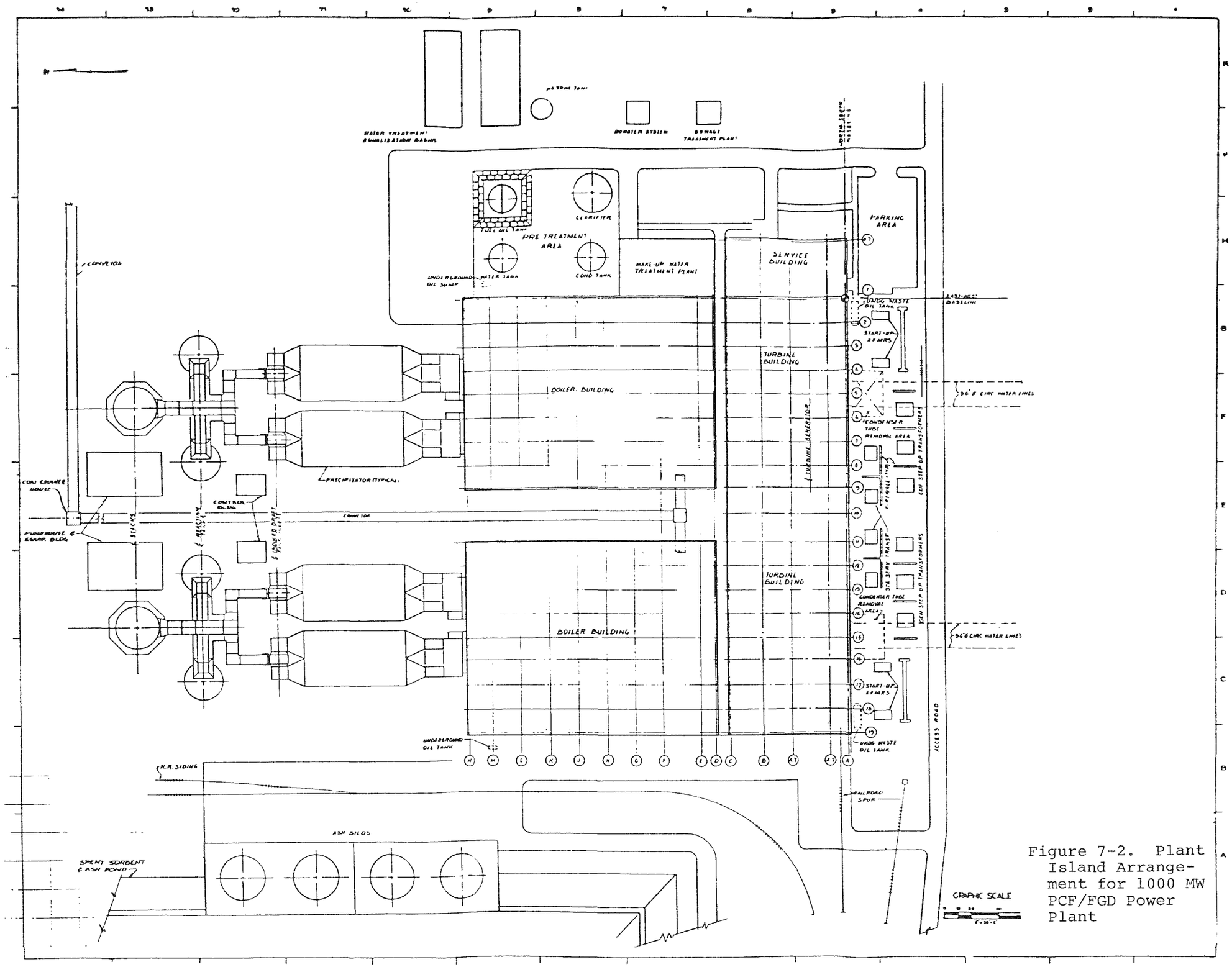

Figure 7-2. Plant Island Arrangement for 1000 MW PCF/FGD Power Plant

Coal bunkers are located on each side of the boiler. Coal feeders and pulverizers are located on the ground floor under the bunkers. In the northern end of the boiler structure are the air preheaters and the F.D. fans. Flue gas ductwork from the air preheaters passes through the boiler building, enters the electrostatic precipitator, and then runs northward to the induced draft fans and stack.

Steam Generator

The PCF steam generator is a subcritical, forced circulation type, dry bottom ash boiler having a furnace volume, water walls, evaporator, convection pass, steam drum, downcomers, circulation pumps, economizer, casing, insulation, support structure, controls and instrumentation.

Fuel Feed System

The fuel feed system consists of the gravimetric feeders, pneumatic transport lines, pulverizers and primary air fans and controls as found in most PCF units. The gravimetric feeders weigh the coal en route to the boiler to assure proper firing rate. From the feeders, the coal is transported to the pulverizers where the coal is reduced in size to approximately 95% x 200 mesh, and dried. The pulverized coal is then conveyed by hot air from the primary air fans to the burners located at each corner of the furnace.

Air and Gas Handling System

The air and gas handling system consists of forced draft, primary air and induced draft fans, regenerative air heaters, steam coil air preheater, electrostatic precipitator (ESP), flue gas desulfurization (FGD) system and air and gas ductwork. The design and function of the system components are analogous to those used on current 600 MW pulverized coal-fired boilers.

Ash Handling System

A hydraulic transport system is provided to convey bottom ash from the boiler to the FGD system sludge dewatering station for water removal. A pneumatic transport system is provided to transport the flyash from the electrostatic precipitator to the FGD system sludge dewatering station where it is mixed with the dewatered sludge and bottom ash for subsequent offsite disposal as a moist material.

Solid Waste Disposal

The mixture of dewatered FGD system sludge, dewatered bottom ash and flyash is normally transported offsite for disposal. The cost estimate of $8.50 per ton (on a dry basis) includes the costs associated with fixation, transport, and wet ponding of the material.

To allow for periods of interruption in the offsite disposal, a clay lined solid waste disposal area is provided at the plant site. This area is sized to accommodate a volume of waste material equivalent to 5 years plant operation at 100 percent load operating conditions.

PCF MASS AND ENERGY BALANCE

Coal feed rates of 1,034,000 lb/hr for eastern coal and 1,327,428 lb/hr for western coal are calculated for the PCF plant by dividing the heat required by the turbine and stack gas reheat at 100 percent load, 1,136,430 kW gross, by the boiler efficiency and the higher heating value of the coal. The heat required by each main turbine and boiler feed pump turbine per hour at 100 percent load is 4,474,300,000 Btu/hr. This value is obtained from a General Electric Company turbine heat balance for their TC4F-30 turbine with seven stages of feedwater heating (4 closed low pressure feedwater heaters, 1 deaerator and 2 closed high pressure feedwater heaters). Heat required for stack (flue) gas reheat is computed to be 151,900,000 Btu/hr for eastern coal. As a partial bypass flue gas design is considered for the western coal case, no reheat is required. For both cases the FGD system designs are developed by the Bechtel-TVA "Shawnee Limestone - Lime Computer Program". The boiler efficiency is 88% and 85.3% for the eastern coal and western coals, respectively. The higher heating value is 10,100 Btu/lb for the eastern coal and 8,020 Btu/lb for the western coal.

The limestone and water consumption rates for the plants are computed by the Bechtel-TVA computer program referred to above.

A flyash and bottom ash flow split of 75 and 25 percent, respectively, is used to size the electrostatic precipitator and the bottom ash handling systems based on flow rates calculated at maximum continuous rating.

FLUE GAS DESULFURIZATION (FGD)

A limestone slurry process was selected for desulfurization of flue gas with flyash removal provided by ESP. A common plenum is placed downstream from the ESP and the induced draft (ID) fans to distribute the gas to the absorbers.

Figure 7-3 illustrates schematically the major process steps involved in wet alkali scrubbing for the eastern coal case. Hot flue gas from the air preheater containing combustion products, fly ash and SO_2 is routed to an electrostatic precipitator where the fly ash is removed prior to introduction to the scrubber plenum. The fly ash free flue gas is then boosted in pressure to overcome the frictional pressure drops through the scrubber process equipment and is admitted to the scrubber presaturator chamber. Here the flue gas is cooled by contact with recycled slurry before being discharged to the main scrubber module. This presaturation prevents the formation of corrosive scale deposits within the scrubber module proper. The flue gas is then contacted with makeup and recycled alkali slurry to complete the desulfurization. The desulfurized flue gas passes through a mist eliminator system before being discharged to an in-duct reheater. The reheater is employed to prevent condensation in the stack as well as to enhance plume bouyancy. From the reheater, the flue gas is discharged to the stack and finally the atmosphere. For the western coal case this system is modified to include a bypass around the scrubber modules for a flue gas slip stream and the elimination of the flue gas reheater.

The slurry which contacts the flue gas in both the presaturator and scrubber modules is let down to a reaction tank where calcium sulfite is oxidized to calcium sulfate. The recycle pump returns slurry to the scrubber as well as supplying the thickener circuit.

Within the thickener, precipitated calcium salts of sulfur are concentrated and routed to a rotary vacuum filter for final dewatering prior to disposal. Both the vacuum filter filtrate and the thickener overflow are routed back to the reaction tank and makeup feed station.

In the limestone feed preparation station, a slurry of reagent is prepared and sent to a slurry feed tank. The limestone is crushed and slurried prior to addition to the slurry feed tank.

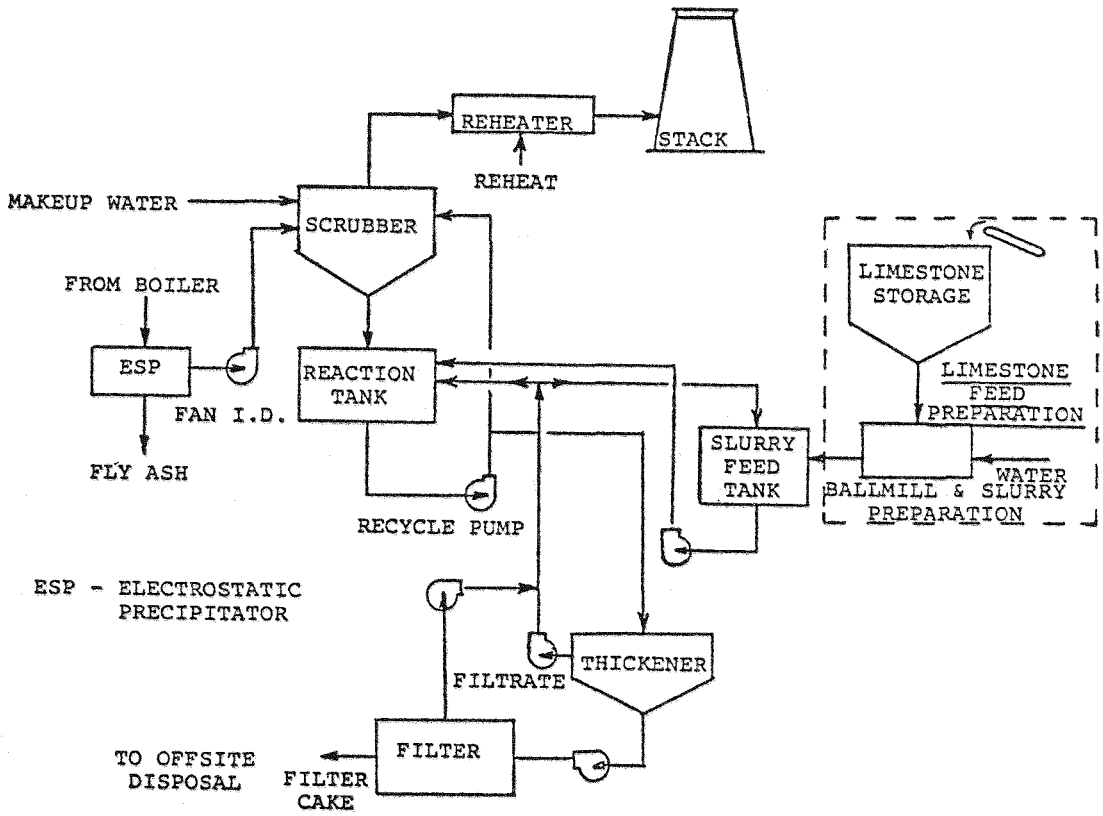

Figure 7-3. FGD Limestone Slurry Process Diagram

A number of limestone based FGD systems were modeled using a computer program developed by the Tennessee Valley Authority (TVA). Table 7-1 presents ESP and scrubber design conditions and Table 7-2 presents FGD process and cost data used in this model.

PLANT AUXILIARY POWER REQUIREMENTS

The electric power required for the motor driven auxiliary equipment of each plant is taken from the auxiliary power transformers and, therefore, must be subtracted from the generator output to calculate the net plant output.

Auxiliary power requirements for the eastern and western PCF plants are presented in Table 7-3.

The net plant output for the PCF plants is the power available at the high voltage bushings of the main transformer for ultimate delivery to the grid distribution network. The net plant output is obtained by subtracting the auxiliary power and transformer losses from the generator output for each unit type. Although the turbine-generator output for both plants are the same, the different auxiliary power requirements of these plants result in differences in net plant power output. The PCF net plant output at maximum guaranteed turbine operation is shown in Table 7-4.

The net plant heat rate is defined as the ratio of boiler heat input to net plant power output. Due to different boiler efficiencies and plant auxiliary power requirements, the net plant heat rates for the PCF plants are slightly different. A summary of performance data and the net plant heat rate at the turbine guaranteed point (100 percent load) for the units are also presented in Table 7-4.

ECONOMIC ANALYSES

Based on established power industry practices and vendor estimates for other plant equipment, the plant capital costs and operating and maintenance costs were estimated.

Capital costs and total capital requirements are presented in Tables 7-5 and 7-6.

Table 7-1

ESP AND SCRUBBER DESIGN DATA

ESP Parameters	Eastern Coal	Western Coal	Units
Efficiency	99.8	99.8	%
Specific Collection Area cm/sec	391	507	ft^2/1000 acfm
Flue Gas Temperature	280	280	^oF
FGD Parameters			
Flue Gas Temperature to Scrubber	280	280	^oF
Reheater Steam Temperature	175	NA	^oF
Liquid/Gas Ratio	85	60	Gal/1000 acfm
Scrubber Gas Velocity	8	8	ft/sec
SO_2 Out of Scrubber	336	53	ppm
Solids in Recycle to Scrubber	20	20	Wt%
Solids in Sludge Discharge	40	40	Wt%
Number of Scrubber Stages	2	3	-
Height of Contact Bed Per Stage	6	6	Inches
Number of Spare Ball Mills	1	1	-
Number of Operating Scrubbers	5	3	-
Number of Standby Scrubbers	1	1	-
Entrainment	0.1	0.1	Wt% of Outlet Flow Rate

Note: Western coal case is designed for 22% bypass with all remaining flue gas scrubbed to 90% SO_2 removal.

Table 7-2

CHARACTERISTICS OF SELECTED FGD SYSTEMS
FOR EASTERN AND WESTERN PCF PLANTS
(Mid-1978 $)

Operating Data	Eastern Coal	Western Coal	Units
Coal Consumption	9.6	0	Ton/h
Limestone Consumption	66.6	10.93	Ton/h
Auxiliary Power	17,332	10,512	kW
Sludge Production	86.43	14.28	Ton/h
Net Plant Power Output	1072.07	1077.16	MW
Scrubber Capital Cost Data			
Raw Material Handling and Feed Preparation	9,230,000	3,872,000	$
Scrubber Modules	47,140,000	34,732,000	$
Waste Disposal	5,536,000	4,000,000	$
Balance of FGD System	7,000,000	7,000,000	$
Total Direct Costs (Excluding Land)	68,906,000	49,604,000	$
Undistributed Costs	4,134,000	2,976,000	$
Process Capital	73,040,000	52,580,000	$
Engineering & Home Office Fees	6,891,000	4,960,000	$
Project Contingency	11,990,000	8,631,000	$
Process Contingency	7,993,000	5,754,000	$
Total Plant Investment	99,914,000	71,925,000	$
Preproduction Costs	2,600,000	2,000,000	$
Inventory Costs	636,000	105,000	$
Allowance for Funds During Construction	16,586,000	11,940,000	$
Total Capital Required	119,736,000	85,970,000	$
$/kW net	112	80	

Note: 1) All operating and cost data are based on a 1136 MWe gross output plant located in a mid-continental U.S. area operating at 70% capacity factor. The eastern coal plant is designed to burn coal with an HHV of 10,100 Btu/lb, 4% sulfur and 90% SO_2 removal. The western coal plant is designed to burn coal with an HHV of 8,020 Btu/lb, 0.48% sulfur and 70% SO_2 retention.

2) Coal consumption required for flue gas steam reheat based on use of turbine bleed steam and a boiler efficiency of 88.0% for the eastern plant.

Table 7-3

AUXILIARY POWER REQUIREMENTS
FOR 1000 MWe
EASTERN AND WESTERN PCF PLANTS

System	Power, kW	
	Eastern	Western
BOILER PLANT		
Coal Mills	3,000	3,880
Primary Air Fans	2,426	3,140
Forced Draft Fans	2,906	2,936
Induced Draft Fans	5,028	5,128
Boiler Circulation Pumps	3,940	3,940
Fuel Feed	806	816
Precipitators	3,400	3,400
Miscellaneous Equipment	246	246
Boiler Plant Total	21,752	23,486
Turbogenerator Building Total	5,440	5,440
FGD System	17,332	10,512
Balance of Plant Total	19,836	19,832
Total	64,360	59,270

Table 7-4

SUMMARY OF PCF PLANT PERFORMANCES
AT MAXIMUM GUARANTEED TURBINE OUTPUT

PERFORMANCE DATA	EASTERN	WESTERN
GROSS GENERATOR OUTPUT, MW	1,136.43	1,136.43
AUXILIARY POWER, MW	64.36	59.27
NET PLANT OUTPUT, MW	1,072.07	1,077.16
GROSS TURBINE HEAT RATE, Btu/kWh	7,874	7,874
BOILER EFFICIENCY, %	88.0	85.3
NET PLANT HEAT RATE, Btu/kWh	9,741	9,694

Table 7-5

CAPITAL COSTS FOR
PCF PLANTS

FPC Acct. No.	Description of Account	Eastern	Western
310.0	LAND - TOTAL	$ 2,700,000	$ 2,200,000
311.1	Yard Work	12,595,000	12,190,000
311.2	Boiler House	21,821,000	21,900,000
311.3	T.G. Building	9,103,000	9,135,000
311.4	Service Building	1,527,000	1,527,000
311.5	Water Treatment Building	100,000	100,000
311.6	Waste Treatment Building	(Included in	Account 311.5)
311.7	Make-Up Water Intake Structure	401,000	401,000
311.8	Barge Unloading Facility	1,058,000	1,058,000
311.9	TOTAL ACCOUNT	46,605,000	46,311,000
312.1	Steam Generating Equipment (Including FGD System)		
312.2	Draft System	214,128,000	200,486,000
312.5	Instrumentation		
312.3	Coal and Limestone Handling	23,885,000	23,975,000
312.4	Ash and Dust Handling	8,560,000	9,010,000
312.6	Steam and Feedwater System	33,500,000	33,500,000
312.7	Water Treatment System	2,740,000	2,740,000
312.8	Miscellaneous	1,886,000	1,886,000
312.0	TOTAL ACCOUNT	284,699,000	271,597,000
314.1	T.G. and Accessory Equipment	56,784,000	56,784,000
314.2	Circulation Water System	22,564,000	22,564,000
314.3	Condensing System	14,502,000	14,502,000
314.4	T.G. Auxiliaries	5,130,000	5,130,000
314.5	Instrumentation	9,500,000	9,500,000
314.0	TOTAL ACCOUNT	108,480,000	108,480,000
315.1	Switchgear	5,430,000	5,430,000
315.2	Station Service Equipment	6,264,000	6,264,000
315.3	Switchboards	506,000	506,000
315.4	Protective Equipment	694,000	694,000
315.5	Elec. Struct. and Wiring Containers	6,422,000	6,422,000
315.6	Power and Control Wiring	13,174,000	13,174,000
315.0	TOTAL ACCOUNT	32,490,000	32,490,000
316.1	Air and Water Service System	2,464,000	2,464,000
316.2	Communication Equipment	492,000	492,000
316.3	Furnishing and Fixtures	778,000	778,000
316.0	TOTAL ACCOUNT	3,734,000	3,734,000
353.0	STATION EQUIPMENT TOTAL	5,742,000	5,742,000
	TOTAL DIRECT CONSTRUCTION	$481,750,000	$468,354,000

Note: Costs are based on mid-1978 dollars for a 1136 MWe gross output power plant located in a mid-continental U.S. area.

Table 7-6

TOTAL CAPITAL REQUIREMENTS FOR
PCF PLANTS

Acct	Description	Eastern	Western
310	Land and Land Rights	$ 2,700,000	$ 2,200,000
311	Structures and Improvements	$ 46,605,000	$ 46,311,000
312	Boiler Plant Equipment	$284,699,000	$271,597,000
314	Turbogenerator Units	$108,480,000	$108,480,000
315	Accessory Electrical Equipment	$ 32,490,000	$ 32,490,000
316	Miscellaneous Power Plant Equipment	$ 3,734,000	$ 3,734,000
353	Station Equipment	$ 5,742,000	$ 5,742,000
Total Direct Costs (Excluding Land)		$481,750,000	$468,354,000
Undistributed Costs		$ 28,905,000	$ 28,101,000
Process Capital		$510,655,000	$496,455,000
General Facilities		$ 0	$ 0
Engineering and Home Office Fees		$ 48,175,000	$ 46,835,000
Subtotal		$558,830,000	$543,290,000
Project Contingency		$ 83,825,000	$ 81,494,000
Process Contingency		$ 6,190,000	$ 4,260,000
Sales Tax		$ 0	$ 0
Total Plant Investment		$648,845,000	$629,044,000
Royalty Allowance		$ 0	$ 0
Preproduction Costs		$ 17,931,000	$ 16,211,000
Inventory Capital		$ 9,328,000	$ 8,066,000
Initial Catalyst and Chemicals Charge		$ 0	$ 0
Allowance for Funds During Construction		$107,708,000	$104,421,000
Land		$ 2,700,000	$ 2,200,000
Total Capital Requirements		$786,512,000	$759,942,000
Total Capital Required, $/kW net		734	706
Net Plant Output, MWe		1072.07	1077.16

Note: Costs are based on mid-1978 dollars for a 1136 MWe PCF plant located in a mid-continental U.S. area. The eastern coal fired plant burns coal with a HHV of 10,000 Btu/lb and 4% sulfur. The western coal fired plant burns coal with a HHV of 8,020 Btu/lb and 0.48% sulfur.

The results of the economic analyses for eastern and western coal-fired PCF power plants are presented in Table 7-7.

The capital cost and levelized busbar power cost for the eastern and western coal-fired PCF plants, each generating a total of 1136.43 MWe and operating in compliance with the applicable NSPS emission requirements, were determined to be 734 and 706 $/kW net, respectively, and 50.35 and 45.10 mills/kWh, respectively.

A breakdown of the categories developed for determination of the PCF power generating costs is described below.

The total capital requirement (TCR) includes all the capital investment required to complete the project. This requirement is presented in Table 7-6 and is comprised of:

- Total Plant Investment
- Royalty Allowance
- Preproduction Costs
- Inventory Capital
- Initial Catalyst and Chemicals Charge
- Allowance for Funds During Construction (AFDC)
- Land

A breakdown in the total direct cost, according to the code of accounts, is presented in Table 7-5.

Royalty allowance is assumed to be paid by the equipment manufacturers and is included in the equipment cost.

Preproduction and operation and maintenance costs are presented in Tables 7-8, 7-9, 7-10 and 7-11.

The value of inventories of fuel, other consumables, and by-products is included in the inventory capital account. The inventory capital is presented in Table 7-12.

Initial catalyst chemical costs are included in inventory capital.

Table 7-7

CAPITAL INVESTMENT AND
REVENUE REQUIREMENTS FOR PCF PLANTS

PARAMETER	EASTERN	WESTERN
Criteria		
SO_2 Emission Std.	90%	70%
Ca/S, mole ratio	1.02	1.3
Operating Conditions		
Gross Power Output, MW	1136.43	1136.43
Auxiliary Power, MW	64.36	59.27
Net Power Output, MW	1072.07	1077.16
Boiler Efficiency, %	88	85.3
Net Plant Heat Rate, Btu/kWh	9,741	9,694
Materials/Consumption/Production		
Coal Consumption, ton/h	517.0	651.0
Limestone Consumption, ton/h	66.6	10.93
Solid Wastes, wet, ton/h	86.43	14.28
Solid Wastes, dry, ton/h	82.92	41.64
Water Consumption, GPM	13,000	13,000
Capital Investment (mid-1978 dollars)		
Capital Cost, $ millions	787	760
Capital Cost, $/net kW	734	706
30-Yr Levelized Fixed Charges, $/kW-yr	132	127
30-Yr Levelized Costs (1979-2008)		
Limestone, mills/kWh	1.17	.19
Waste Disposal, mills/kWh	2.53	.83
Water, mills/kWh	.55	.55
Other Consumables, mills/kWh	.28	.28
Total Variable O&M, mills/kWh	4.54	1.85
Fixed O&M, mills/kWh	3.88	3.86
Fixed Charges, mills/kWh	21.53	20.71
Subtotal, mills/kWh	29.95	26.42
Fuel Cost, mills/kWh	20.40	18.68
Busbar Power Cost, mills/kWh	50.35	45.10

Results are based on plant located in mid-continental U.S. area burning eastern coal with a HHV of 10,100 Btu/lb and 4% sulfur and western coal with a HHV of 8,020 Btu/lb and 0.48% sulfur and a 70% capacity factor. All costs are based on mid-1978 dollars.

Table 7-8

PREPRODUCTION COSTS FOR A 1000 MWe EASTERN PCF PLANT

Item	Quantity	Unit Cost	Conversion Factor	Cost[1]
Operating Labor	$2,859,000/yr	See Note 2	1/12 yr	238,300
Maintenance Labor	$2,087,000/yr	See Note 2	1/12 yr	173,900
Administrative Labor	$1,483,800/yr	See Note 3	1/12 yr	123,700
Maintenance Material	$7,095,800/yr	See Note 4	1/12 yr	591,300
Waste Disposal	169.35 ton/h	$8.50/ton	730 h	1,050,800
Limestone	66.60 ton/h	$10.00/ ton	730 h	486,200
Water	13,000 gpm[5]	$0.40/ 1000 gal	730 h	227,800
Fuel	517.00 ton/h	$21.86/ ton	(25%)x730 h	2,062,500
2% of TPI				12,976,900
Preproduction Costs				$17,932,400

Note:
1. All costs are in mid-1978 dollars
2. Table 7-10 presents annual operating and maintenance labor
3. Administrative costs are 30% of O&M labor costs
4. Maintenance materials taken as 3.4 x maintenance labor
5. Table 7-11 presents annual water usage

Table 7-9

PREPRODUCTION COSTS FOR A 1000 MWe WESTERN PCF PLANT

Item	Quantity	Unit Cost	Conversion Factor	Cost[1]
Operating Labor	$2,859,000/yr	See Note 2	1/12 yr	238,300
Maintenance Labor	$2,087,000/yr	See Note 2	1/12 yr	173,900
Administrative Labor	$1,483,800/yr	See Note 3	1/12 yr	123,700
Maintenance Material	$7,095,800/yr	See Note 4	1/12 yr	591,300
Waste Disposal	55.92 ton/h	$8.50/ton	730 h	347,000
Limestone	10.93 ton/h	$10.00/ ton	730 h	79,800
Water	13,000 gpm[5]	$0.40/ 1000 gal	730 h	227,800
Fuel	651.0 ton/h	$15.56/ ton	(25%)x730 h	1,848,600
2% of TPI				12,581,000
Preproduction Costs				$16,211,400

Note:
1. All costs are in mid-1978 dollars
2. Table 7-10 presents annual operating and maintenance labor
3. Administrative costs are 30% of O&M labor costs
4. Maintenance materials taken as 3.4 x maintenance labor
5. Table 7-11 presents annual water usage

Table 7-10

ESTIMATE OF ANNUAL OPERATION AND MAINTENANCE LABOR COSTS (Mid-1978 Dollars) FOR EASTERN AND WESTERN PCF PLANTS

Classification	Annual* Salary Per Capita	No. of Person.	Annual Salary
Operation			
Operation Supervisor	36,000	1	36,000
Shift Supervisor	33,000	6	198,000
Control Room Operator	30,000	9	270,000
Asst. Control Room Operator	24,000	9	216,000
Turbine Operator	30,000	9	270,000
Aux. Equipment Operator	24,000	18	432,000
Boiler Operator	24,000	9	216,000
FGD Operator	22,000	15	330,000
Coal and Ash Crew	22,000	18	396,000
Computer Specialist	25,500	1	25,500
Environmental Specialist	25,500	1	25,500
Results Engineer	24,000	1	24,000
Assistant Results Engineer	20,500	6	123,000
Chemical Supervisor	33,000	1	33,000
Chemists	24,000	11	264,000
		115	2,859,000
Maintenance			
Maintenance Supervisor	36,000	1	36,000
Mechanical Maint. Foreman	31,000	1	31,000
Mechanic	24,000	19	456,000
Mechanic's Helper	19,000	19	361,000
Machinist	24,000	3	72,000
Welder	24,000	5	120,000
Carpenter	22,000	3	66,000
Bricklayer	19,000	1	19,000
Electr. Maint. Foreman	31,000	1	31,000
Electrician	24,000	9	216,000
Electrician's Helper	19,000	9	171,000
I & C Foreman	31,000	1	31,000
I & C Repairman	26,000	8	208,000
Building Maint. Foreman	22,000	1	22,000
Plumber	19,000	1	19,000
Laborers	12,000	19	228,000
		101	2,087,000
		216	4,946,000
Average Hourly Rates ($/HR)			
Operating			11.95
Maintenance			9.93
Total			11.01

*Annual salaries include both direct labor charges and payroll burden.

Notes: 1) Man-power estimates are based on a two unit 1136 MWe power generating plant.

2) Average Hourly Rate = $\frac{\text{Total Annual Cost (\$)}}{\text{Number of Person. x 2080 working hours/year}}$

Table 7-11

WATER CONSUMPTION ANALYSIS
FOR 1000 MWe EASTERN AND WESTERN PCF PLANTS

	gpm	gpm/MWe gross
Cooling Tower		
Evaporative	9,400	8.27
Blowdown	1,000	.88
Draft	100	.09
Cooling Tower Total	10,500	9.24
Boiler Make-Up Water Treatment System	240	.21
FGD System		
Humidification	800	.70
Entrainment	40	.04
Disposal Water	300	.26
Hydration	20	.02
Pond Evaporation	840	.74
FGD System Total	2,000	1.76
General Plant Use (Cleaning, Sewage Treatment, Backwashing, etc.)	260	.23
Total Water Usage	13,000	11.44
Gross Generating Capacity (MWe)	1,136	
	Eastern	Western
Net Generating Capacity (MWe)	1,072	1,077
Total Water Usage (gpm/MW net)	12.13	12.07

Table 7-12

INVENTORY CAPITAL

Eastern PCF Plant

Material	Quantity	Rate	Cost
Coal	517.00 TPH	21.86 $/Ton	$8,250,200
Limestone	66.60 TPH	10.00 $/Ton	$ 486,180
Maintenance Materials	-	-	$ 591,300
Inventory Capital			$9,327,700

Western PCF Plant

Material	Quantity	Rate	Cost
Coal	651.0 TPH	15.56 $/Ton	$7,394,400
Limestone	10.93 TPH	10.00 $/Ton	$ 79,800
Maintenance Materials	-	-	$ 591,300
Inventory Capital			$8,065,500

AFDC is calculated from the center of gravity of expenditures, based on compounded 8% per year interest over the plant construction expenditure schedule. For a center of gravity of 2 years, corresponding to the 4-year construction period of the PCF plants, the AFDC is 16.6% of Total Plant Investment (TPI). For a center of gravity of 1½ years, corresponding to the 3-year construction period of the PFBC plants, the AFDC is 12.2% of TPI. Table 7-13 presents the AFDC for the PCF plants.

Table 7-13

ALLOWANCE FOR FUNDS DURING CONSTRUCTION
FOR PCF UNITS

Plant	Total Plant Investment	Allowance for Funds During Construction
Eastern	$648,845,000	$107,708,000
Western	$629,044,000	$104,421,000

Property taxes and insurance costs are 2.0% per year of total capital requirement and are included in the levelized fixed charge rate.

Operating costs are presented on a 30-year levelized basis. For costs other than fuel, first-year costs are multiplied by 1.886. For fuel, first-year costs are multiplied by 1.986 (for the eastern PCF plant and 1.935 for the western PCF plant). Table 7-14 presents a breakdown of the operating costs.

Table 7-14

OPERATING COST BREAKDOWN
FOR 1000 MWe EASTERN AND WESTERN PCF PLANTS

Item		Quantity	Unit Cost	Consumption/ MW Gross	Total Cost $/Yr	First Year Cost mills/kWh	30 Year Levelized Cost mills/kWh
Operating	Eastern	233,960 Mh/yr	-	-	2,859,000	.43	.82
Labor	Western	233,960 Mh/yr	-	-	2,859,000	.43	.82
Maintenance	Eastern	207,250 Mh/yr	-	-	2,087,000	.32	.60
Labor	Western	207,250 Mh/yr	-	-	2,087,000	.32	.60
Maintenance	Eastern	-	-	-	7,096,000	1.08	2.04
Materials	Western	-	-	-	7,096,000	1.08	2.04
Administration	Eastern	.30 x Total	-	-	1,484,000	.23	.42
	Western	O&M Labor	-	-	1,484,000	.23	.43
Fuel	Eastern	517.00 tph	$21.86/ton	910 lb/h	69,302,000	10.54	20.40
	Western	651.00 tph	$15.56/ton	1146 lb/h	62,114,462	9.40	18.68
Limestone	Eastern	66.60 tph	$10.00/ton	117 lb/h	4,084,000	.62	1.17
	Western	10.93 tph	$10.00/ton	19.2 lb/h	670,228	.10	.19
Waste Disposal	Eastern	169.35 tph	$ 8.50/ton	298 lb/h	8,827,000	1.34	2.53
	Western	55.92 tph	$ 8.50/ton	98.5 lb/h	2,914,662	.44	.83
Water	Eastern	13,000 gpm	$.40/1000 gal	11.4 gpm	1,913,000	.29	.55
	Western	13,000 gpm	$.40/1000 gal	11.4 gpm	1,913,000	.29	.55
Other	Eastern	-	-	-	1,000,000	.15	.28
Consumables	Western	-	-	-	1,000,000	.15	.28

Notes:
1. Data based on plants operating at a 70% capacity factor located in mid-continental U.S. area, burning a) eastern coal with a HHV of 10,100 Btu/lb and 4% sulfur, and b) western coal with a HHV of 8,020 Btu/lb and 0.48% sulfur.
2. Gross Generating Output 1136 MWe.
3. Eastern PCF Unit Net Generating Output 1072 MWe; Western PCF Unit Net Generating Output 1077 MWe.
4. Cost based on mid-1978 dollars with a 30-year levelization factor of 1.986 for western coal, 1.935 for eastern coal and 1.886 for all other costs applied to first-year costs.

Section 8

REFERENCES

1. New Stationary Sources Performance Standards for Electric Utility Steam Generating Units. Federal Register, June 11, 1979.

2. Technical Assessment Guide, EPRI PS-866-SR, Electric Power Research Institute, Palo Alto, CA, Special Report, June 1978.

3. Economic Premises for Electric Power Generating Plants, Fossil Fuel and Advanced Systems Division, Electric Power Research Institute, Palo Alto, CA, July 26, 1978.

4. Engineer, Design, Construct, Test and Evaluate a Pressurized Fluidized Bed Pilot Plant Using High Sulfur Coal for Production of Electric Power, FE-1726-20A, Curtiss-Wright Corporation, Wood-Ridge, NJ, March 15, 1977.

5. Letter, E. Ganapathy, Curtiss-Wright Corp. to G. Marchmont, Burns and Roe, Inc., dated September 26, 1979. Subject: Revised Estimated Auxiliary Load for a Pressurized Fluidized Bed Coal Fired Plant.

6. CFCC Development Program, DOE Commercial Plant Economic Analysis (Task 1.6), Contract No. EX-76-C-01-2357, General Electric Co., Schenectady, NY, Preliminary, June 1979.

7. CFCC Development Program, DOE Commercial Plant Design Definition (Task 1.2), Contract No. EX-76-C-01-2357, General Electric Co., Schenectady, NY, March 1978.

8. 170 MW Pressurized Fluidized Bed Combustion Electric Plant, presented by J. J. Markowsky of AEP and B. Wickstrom of STAL-Laval at the Sixth Energy Technology Conference and Exposition, Washington, D.C., February 1979.

9. Private communication with L. O'Connell, American Electric Power Service Corp.

10. Letter, S. Moskowitz, Curtiss-Wright Corp. to G. Marchmont, Burns and Roe, Inc., dated November 12, 1979. Subject: Curtiss-Wright Response to First Draft Report.

11. Letter, L. O'Connell, American Electric Power Service Corp., to G. Marchmont, Burns and Roe, Inc., dated October 23, 1979. Subject: AEP Response to First Draft Report.