MASTER

FE-1806-33

DEVELOPMENT OF HIGH TEMPERATURE TURBINE SUBSYSTEM TECHNOLOGY TO A "TECHNOLOGY READINESS STATUS" PHASE II

PROGRESS REPORT FOR NOVEMBER, 1977

A. CARUVANA

DECEMBER 9, 1977

NOTICE

This report was prepared as an account of work sponsored by the United States Government. Neither the United States nor the United States Department of Energy, nor any of their employees, nor any of their contractors, subcontractors, or their employees, makes any warranty, express or implied, or assumes any legal liability or responsibility for the accuracy, completeness or usefulness of any information, apparatus, product or process disclosed, or represents that its use would not infringe privately owned rights.

Work Performed Under Contract No. EX-76-C-01-1806

GENERAL ELECTRIC COMPANY
GAS TURBINE DIVISION
1 RIVER ROAD
SCHENECTADY, NEW YORK 12345

DISTRIBUTION OF THIS DOCUMENT IS UNLIMITED

DISCLAIMER

This report was prepared as an account of work sponsored by an agency of the United States Government. Neither the United States Government nor any agency thereof, nor any of their employees, makes any warranty, express or implied, or assumes any legal liability or responsibility for the accuracy, completeness, or usefulness of any information, apparatus, product, or process disclosed, or represents that its use would not infringe privately owned rights. Reference herein to any specific commercial product, process, or service by trade name, trademark, manufacturer, or otherwise does not necessarily constitute or imply its endorsement, recommendation, or favoring by the United States Government or any agency thereof. The views and opinions of authors expressed herein do not necessarily state or reflect those of the United States Government or any agency thereof.

DISCLAIMER

Portions of this document may be illegible in electronic image products. Images are produced from the best available original document.

Printed in the United States of America

Available From

National Technical Information Services
U.S. Department of Commerce
5285 Port Royal Road
Springfield, Virginia 22161

Price: Printed Copy $4.00 ; Microfiche $2.25

"This report was prepared as an account of work sponsored by an agency of the United States Government. Neither the United States nor any agency thereof, nor any of their employees, makes any warranty, expressed or implied, or assumes any legal liability or responsibility for any third party's use of any information, apparatus, product or process disclosed in this report, or represents that its use by such third party would not infringe privately owned rights."

FE-1806-33
Dist. Category UC-90

DEVELOPMENT OF HIGH TEMPERATURE TURBINE SUBSYSTEM TECHNOLOGY TO A "TECHNOLOGY READINESS STATUS"

PHASE II

PROGRESS REPORT FOR NOVEMBER, 1977

A. CARUVANA

GENERAL ELECTRIC COMPANY
GAS TURBINE DIVISION
1 RIVER ROAD
SCHENECTADY, NEW YORK 12345

Prepared for

THE UNITED STATES DEPARTMENT OF ENERGY
OFFICE OF ENERGY TECHNOLOGY
Under Contract No. EX-76-C-01-1806

ABSTRACT

The Instrumentation Section of the HGPDTS will contain the traversing gas sampling and temperature probes as described in the October report. In addition, several other measurements are being considered. The nozzle section will have thermocouples to measure water temperatures and copper temperatures. The location of a thermocouple on the outersurface of the skin would require slotting or drilling the skin. This would destroy the integrity of the structure and compromise the test. A traversing optical pyrometer is being considered for measurement of the surface temperature of nozzle vane. The region sensed would be limited to the area that could be directly viewed from a downstream probe looking toward the trailing edge of the vane.

The preliminary design analysis of the test section of the Shock Tunnel for the flat plate model test has been completed. Two different designs will be utilized, one for the 1st Stage Nozzle Conditions and the other for the 1st Stage Bucket Conditions.

Design efforts are described establishing system parameters and constraints for the Low Temperature, Low-Btu Gas Cleanup System to be installed and operated with the GEGAS-D gasifier in 1979. Chemical cleanup system sensitivites and the gasifier output gas specification are described.

The Design Fuel for the TRV-5 verification test is defined with a minimum LHV of 127.5 Btu/scf. Cycle conditions are described for both the design fuel and the Phase I fuel.

The proposed TRV load generator is tentatively defined as the MS7001E hydrogen cooled, synchronous generator.

Initial efforts are described on potential failure modes and effects. One such potential cause, Foreign Object Damage (FOD) is being addressed.

Detailed combustor analyses are proceeding with final airflow splits to be established during the next reporting period.

A detailed cooling flow map is illustrated representing a first cut at the cooling air and water distribution of the TRV.

Materials and Processes tasks relative to the components of the three stages are described with emphasis on the manufacturing aspects.

Supporting technology tasks are described including Non-Destructive Evaluation techniques, Hot Particulate Erosion, Plasma Spray Development and Corrosion Improvement.

REPORTING CATEGORY I

Hot Gas Path Development Tests

Stage 1 Nozzle

Processing steps have been itemized in order to derive a final master process flow sheet for Stage 1 nozzles fabrication. These steps have individually been analyzed for timing, cost, and development needs. This activity will continue until a final design is reached.

Orders have been placed for .010" thick Glidcop Al-20 copper alloy sheet. Photo etching negatives representative of the sketch depicted in Figure 1 have been ordered. Alloy 304 stainless steel and Alloy A286 tubing as well as 304 stainless steel outer clad material have been purchased and are currently being prepared for specimen assembly. Initial brazing tests for attachment of the tubing to the specimen end plugs have been conducted utilizing Nicro braze 130 (1040°C brazing temperature). These tests showed vacuum brazing to be better than hydrogen brazing in terms of overall joint quality. A combination of vacuum brazing with a final GTA seal weld appears to be the most promising method of specimen assembly identified to date.

During the next month it is anticipated that photo etching studies on the Glidcop Al-20 alloy will be initiated. The final assembly sequence for the cylindrical test specimens will be identified as well.

Instrumentation

The Instrumentation Section of the HGPDTS will contain the traversing gas sampling and temperature probes as described in the October report. In addition, several other measurements are being considered. The nozzle section will have thermocouples to measure water temperatures and copper temperatures. The location of a thermocouple on the outersurface of the skin would require slotting or drilling the skin. This would destroy the integrity of the structure and compromise the test. A traversing optical pyrometer is being considered for measurement of the surface temperature of nozzle vane. The region sensed would be limited to the area that could be directly viewed from a downstream probe looking toward the trailing edge of the vane.

The heat transfer to the vane skin is affected by the gas turbulence. Therefore, a laser velocimeter is being considered to measure the upstream gas turbulence.

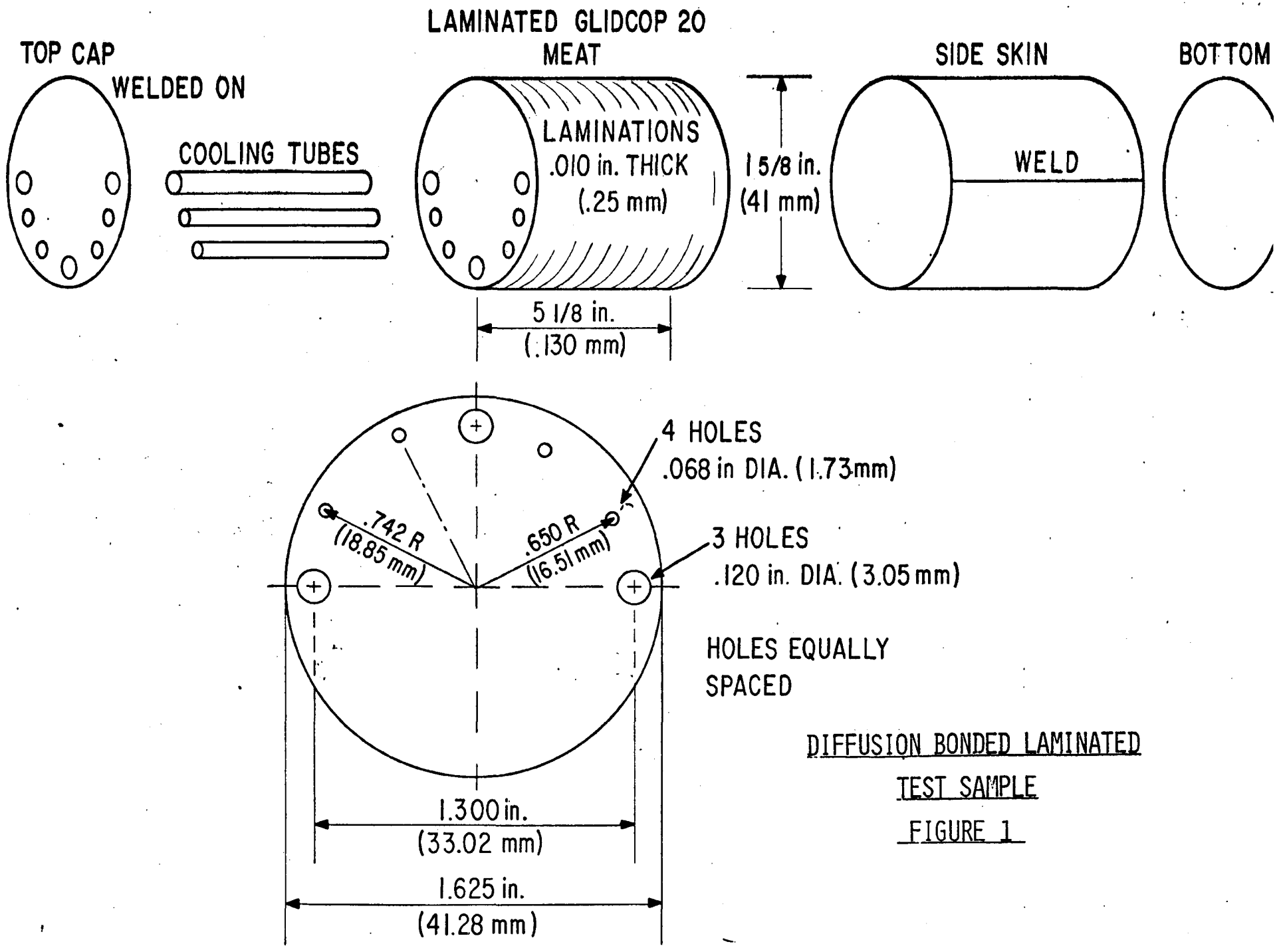

DIFFUSION BONDED LAMINATED
TEST SAMPLE
FIGURE 1

Instrumentation is being designed for the quality control tests on the cooling water channels in the nozzle vanes. It is intended that the integrity of the water cooling channels will be monitored at various stages of fabrication and assembly.

REPORTING CATEGORY II

Turbine Simulator Tests

Evaluation of the utility of the heat transfer data to be derived has resulted in a change to install a monolitic nozzle for short test periods to acquire this data.

REPORTING CATEGORY III

Shock Tunnel Tests

The preliminary design analysis of the test section for the flat plate model test has been completed. Two different designs will be used for this test. One design allows the flow to go straight into the dump tank with no blockage at the end of the test section. The flow conditions of this design exactly simulate those approaching the first stage nozzle with the free stream Mach number equal to .12 and an approach temperature that varies from 1000°R to 4500°R. In order to simulate the flow conditions approaching the first stage bucket, the free stream Mach number has to be increased. This is accomplished by blocking the flow in the exit end of the test section. The Mach number can be varied by changing the percent blockage and this can be accomplished by installing wedges at the exit of the test section. This constitutes the second test section design. Working drawings of these test section designs are presently being made up. Fabrication of the test sections will begin as soon as the drawings are completed.

An analysis of the wave pattern in the test sections has also been carried out. From this, the length of the flat plate model can be determined. If the flow on the flat plate model is to be free of disturbance due to reflected waves from the top wall of the test section, the length of the flat plate model is determined to be 6 inches. Consequently, the test will be conducted on a 6 inch flat plate model.

REPORTING CATEGORY IV

Low Temperature, Low-Btu Gas Cleanup System Tests

System Design

A chemical gas cleanup system will be designed, installed, and operated together with the GEGAS-D gasifier to provide representative low-Btu gas for Turbine Simulator tests during 1979. Design sensitivities associated with the existing chemical cleanup system and a realistic raw gas specification based on test data from GEGAS-D operation have been established.

The components of the feed gas to the chemical cleanup system that may be considered sensitive are solid particulates, tar, H_2S, COS, O_2, SO_2, and HCN. The operating pressure of the system is also a sensitive item.

The solid particulate specification of the gasifier off-gas indicates that 28 weight percent of solids are smaller than one micron. In the commercial concept design (Phase I), the physical cleanup system had to use Venturi scrubbers aided by high intensity ionizer-agglomerators to achieve a 99.8 weight percent removal of the incoming solids. This high efficiency for removal of solids was required to limit the alkali metal to 0.1 ppmw in the clean saturated gas. The presence of alkali metals such as Na and K in the incoming solids was estimated as being two weight percent. It was also assumed that salts of these metals are insoluble.

Based on the above design, no solids larger than 0.14 micron were expected to enter the chemical cleanup system. In the event larger particles do enter the chemical cleanup system, they may be removed with the condensates while the gas is being cooled. In this case, they will be removed by the sub-micron filters in the recycle condensate lines. If these particles are not removed with the condensate, they will enter the Benfield absorber and may cause foaming in the Benfield system. If alkali metals are present in the form of soluble salts, it is possible that some of these materials will end up in the clean gas when it is resaturated with recycle oil and water.

The clean gas from the Benfield unit is washed in a water-wash column to prevent the carry over of soluble and insoluble alkali metal salts from the Benfield unit.

In the absence of experimental data on the properties of tar, naphtha and phenols, property data as reported in DOE R&D Report Number 105 is being utilized. Data on pages 85 and 155 were used for naphtha, and data on pages 81 and 151 were used for tar. The phenol fraction was considered as pure phenol. The physical properties of tar and naphtha are summarized below:

	AVERAGE MOLECULAR WEIGHT	MEAN BOILING POINT °F
Tar	210	580
Naphtha	145	450

The raw gas quench unit, raw gas coolers, and the tar separators were designed based on the above data. Up to a 20 percent increase in tar and/or naphtha content between the temperature cuts for which the exchanger was designed is not expected to cause a significant problem. The tar separators will not be affected by the 20 percent increase in quantity of tars to be separated, if the specific gravity difference between the tar and water has not changed. The separation of tar and water depends on the difference in specific gravity (ΔSG) between tar and water. A 10 percent decrease in SG from design is a significant change and will require a design modification.

The Benfield unit is designed to remove 90 percent of the sulfur contained in the inlet gas H_2S and COS based on the design loading. According to the Benfield Corporation the percent removal will not significantly change unless the ratio of H_2S to COS is changed. The higher the ratio, the easier it is for the system to achieve the desired percentage recovery.

For the system capability analysis, assume that the ratio of H_2S to COS stays at the design point, but the total sulfur input goes down by 20 percent. According to Benfield, the percentage removal of sulfur will not change significantly and the sour gas to the Claus Sulfur Plant will be leaner in H_2S. The sour gas can be made richer in H_2S and brought back to the design point by using less steam in the regenerator. This action will remove less CO_2 from

the process gas, which is desirable. The sulfur removal efficiency will decrease, but to a lesser degree.

For the case of 20 percent increase in sulfur in the feed gas, while the H_2S to COS ratio is the same, Benfield said that the percentage removal of sulfur will not change significantly, but more sulfur will be present in the clean gas. Benfield suggested that about 20 percent additional steam should be used in the regenerator to reduce the sulfur level of the clean gas to the design point. This action, however, will scrub out more CO_2 from the process gas than it is designed for. To handle the 20 percent increase in sulfur in the feed gas, the regenerator reboiler and the associated equipment and piping should be designed to handle about 20 percent additional duty.

According to Benfield, their solution will absorb O_2 and SO_2 irreversibly, if present, and will produce stable thiosulphates. In the presence of O_2 and SO_2, HCN will also be absorbed irreversibly and stable thiocynate will be produced. But in the absence of O_2 and SO_2, HCN will be absorbed completely and desorbed in the regenerator. The presence of stable chemicals in the Benfield solution may be allowed to go up to 10 weight percent before requiring any removal. Later, an equivalent amount of solution should be taken out from the system to balance out the stable chemicals produced. Recovery of the active chemicals from the waste solution for the pilot plant is not worth considering. The Marcaptans and Thiophens are partially removed in the Benfield system and do not cause any operational problem.

The system operating pressure directly influences the design and operation of the cleanup system. Condensation of tar, oil, and water, and the removal of H_2S are directly influenced by the operating pressure. The operating pressure should be held close to the design point. However, a plus or minus 10 psi change during operation is tolerable.

It is apparent from the above description that the operation of the chemical cleanup system will be a strong function of the gas and condensate constituents and trace quantities as well as the system dynamics of flow pressure, temperature, etc. In an effort to establish a realistic basis for design, operating test

data from GEGAS-D was used together with other realistic assumptions. This specification includes the following:

- Coal specification, Illinois No. 6, ECAS spec (same as for HTTT Phase 1).

Proximate Analysis		Ultimate Analysis	
Volatiles	0.3670	Carbon	0.5960
Fixed Carbon	0.4070	Hydrogen	0.0590
H_2O	0.1300	Oxygen	0.2000
Ash	0.0960	Nitrogen	0.0100
	1.0000	Sulfur	0.0390*
		Ash	0.0960
			1.0000

LHV 10234 Btu/lb
HHV 10788 Btu/lb

* Range of Sulfur variation 0.0312 to 0.0468

- Coal flow to the gasifier

  Nominal 2000 lbs/hr

  Maximum 2600 lbs/hr

  Note: Coal is fed to GEGAS-D on a sized and as-received basis. Coal flow of 2000 lbs/hr is considered the most probable operating condition, however, the chemical cleanup system should accommodate 2600 lbs/hr coal flow.

- Nominal pressure conditions
  a. GEGAS-D operating pressure 345 psia
  b. Entering the chemical cleanup 335 psia
  c. Leaving the chemical cleanup 309 psia

- Nominal temperature conditions
  a. Raw gas temperature 1180°F
  b. Entering the chemical cleanup 296°F
  c. Leaving the chemical cleanup 320°F

- Typical raw gas composition to be expected from GEGAS-D using Illinois No. 6 coal (excludes tar, naptha and phenol).

Component	M.W.	DRY V/O	WET V/O	WET lb-moles/hr	WET lb/hr*
CO_2	44.011	11.0424	9.9413	36.145	1590.778
CO	28.011	18.4868	16.6434	60.513	1695.030
H_2	2.016	15.5888	14.0344	51.027	102.870
CH_4	16.04	3.9972	3.5986	13.084	209.867
N_2	28.02	48.9655	44.0830	160.279	4491.018
***H_2S	34.082	0.8811	0.7932	2.884	98.292
***COS	60.08	0.0871	0.0784	0.285	17.123
NH_3	17.03	0.0520	0.0468	0.170	2.895
O_2	32.00	0.3162	0.2847	1.035	33.120
Ar	39.94	0.5831	0.5250	1.909	76.245
**H_2O	18.02	------	9.9713	36.254	653.297
Flow lbs/hr					8970.536
Total lb-moles/hr				363.585	

* Based on 2600 lb/hr ILL. No. 6 coal to the gasifier

** Based on gas temperature of 1180°F, 300 psig, blast air 400°F, and blast steam 375°F.

*** Based on nominal 3.9% sulfur for ECAS ILL. No. 6 coal
Range of sulfur variation ± 20% from nominal

- Expected quantities of tar, naptha and phenol are given below for two conditions: (a) No tar recycle into the gasifier and (b) 100% tar recycle into the gasifier. Also two degrees are indicated namely: the nominal quantities based on a typical run of GEGAS-D on Illinois No. 6 coal (1), and the maximum quantities expected from GEGAS-D using a highly reactive Montana coal (2). The quantities are based on a coal feed rate of 2600 lbs/hr.

		(1) lb-moles/hr	(2) lb-moles/hr
(a)	Tar $C_{16}H_{16}$	0.46	0.57
	Naptha $C_{10}H_{20}$	0.43	0.54
	Phenol C_6H_5OH	0.22	0.28
(b)	Tar $C_{16}H_{16}$	0.46	0.57
	Naptha $C_{10}H_{20}$	0.85	1.07
	Phenol C_6H_5OH	0.22	0.28

It is recommended that condition (b) degree 1 be used for the design basis.

- Other HTTT, Phase 1 specs to be used for design of the chemical cleanup system:
    a. Solids loading - 2500 ppmw -- same as HTTT, Phase 1.
    b. Heavy hydrocarbon properties -- same as HTTT, Phase 1.
    c. Total particulates in clean gas 30 ppmw -- same as HTTT, Phase 1.
    d. Alkali metal 0.1 ppmw in clean gas is desirable but can be relaxed to 10.0 ppmw if a significant cost reduction will result.
    e. All tar to be recycled back to the gasifier as in HTTT, Phase 1.
    f. Gas cleanup requirement same as HTTT, Phase 1.

This input specification will be used to establish specific input stream identities to the chemical cleanup system based on previous HTTT commercial plant overall system designs.

REPORTING CATEGORY V

Aerodynamic Tests

There was no activity during the reporting period.

REPORTING CATEGORY VI

Motorized Rig Tests

A meeting was held to assess the utility of the Motorized Rig to evaluate the bucket water delivery system.

REPORTING CATEGORY VII

Air Turbine Test

A work order has been initiated with GE/AEG Evendale, Ohio. The use of the Air Turbine (government property) has been verbally authorized by DOE for the period September to December, 1978.

REPORTING CATEGORY VIII

Update Liquid and Gas Fueled Combined Cycle Power Plants

There was no activity during the reporting period.

REPORTING CATEGORY IX

Update Reference Turbine Subsystem Designs (PRD)

There was no activity during the reporting period.

REPORTING CATEGORY X

Update Verification Test System Definition (GE-TRV-5)

The following recommendations were made in a Topical Review with the D.O.E. Program Manager regarding the Phase 3 test fuel:

1. The fuel lower heating value should be maintained at 127.5 Btu/scf or higher in order to have a reasonable chance of achieving the program goal of 2600°F firing temperature.

2. The flange-to-flange turbine design point should be at the minimum fuel heating value, i.e., 127.5 Btu/scf. The combustor and turbine will then be able to operate on fuels with lower heating values up to 160 Btu/scf although the combustor life would be reduced and the machine pressure ratio would decrease below 12:1 design point.

3. The moisture content in the fuel could be used to vary the fuel nominal heating value. This would allow substantial flexibility without doping the low-Btu gas with a petroleum fuel.

The cycle conditions for the Design Fuel are shown in Table I. The gasification plant used in the cycle is similar to the Powerton plant operating on Illinois No. 6 coal except that less water is re-entrained in the gas after the H_2S removal process.

The cycle conditions resulting from operation with a GEGAS gasification plant similar to the one used in the Phase 1 study are shown in Table I. Except for the fuel flows, the gas turbine cycle conditions are very similar for both fuels. The fuel constituents are listed in Table II.

Flange-to-Flange

Work has been started on calculation of some selected preliminary off-design and off-ambient cycles. These cycles will include 40°F, ISO (59°F) and 100°F

TABLE I

HTTT Phase 2 Design Cycle Parameters *

	Flow (PPS)		Pressure (PSIA)		Temp. (°F)	
	I	II	I	II	I	II
Compressor Inlet	294	294	14.7	14.7	59.0	59.0
Gasifier Extraction Air	43.25	58.83	175.5	175.5	652.3	652.3
Comb. Extraction Air	233.72	218.14	175.5	175.5	652.3	652.3
Fuel ***	82.62	95.99	232.2	232.2	420.0	420.0
Coal (TPH)	42.3	54.0				
Turbine Inlet **	316.34	314.12	168.5	168.5	2600	2600
Turbine Exhaust	339.74	337.73	15.8	15.80	1303.8	1306.1

ISO Output I = 70.790 MW
II = 72.31 MW

I = Baseline
II = Design

TABLE II

Low-Btu Gas Composition

Constituent	Phase 2 Baseline (Mole %)	Phase 2 Design (Mole %)
CO_2	4.11	8.61
CO	19.44	10.07
H_2S	0.06	0.05
COS	0.04	-
C_2H_4	0.20	0.38
C_2H_6	0.28	-
CH_4	3.45	4.03
H_2	11.04	17.68
N_2	33.09	36.43
NH_3	0.03	-
By-Products	0.43	0.06
H_2O	27.84	22.69
LHV, Btu/scf	150.2	127.5
HHV, Btu/scf	161.4	141.2

* Based on Preliminary Component Characteristics

** Stage 1 Bucket Inlet

*** Fuel LHV I = 150.5 Btu/scf
II = 127.5 Btu/scf

ambients, a few reduced power points at ISO and a full-speed, no-load point on distillate representative of the gasifier startup condition. The methodology for calculation of these cycles has been worked out and calculations are underway. The work includes modified inputs to a standard cycle deck to represent the TRV components and configuration up to the firing temperature plane (this step is completed), calculation of cycles to this stage (this step is in process), preliminary estimates of water cooled turbine performance and cooling for these conditions, and finally input of all these to the water cooled turbine cycle program for final cycle conditions. The last two steps may require iteration.

Results will be used to survey various machine design conditions, provide early input to Controls and Power Plant systems, and to generally give more scope to the design requirements.

Accessories

Information regarding the TRV load is necessary to calculate rotor critical speeds, fault torques, and rotor component stresses. In order to initiate these calculations, it is being assumed that the load device will be a 3600 rpm generator. A gear box will also be required since the turbine shaft speed is 5100 rpm. The expected output of the TRV is 72 MW_e which is very close to the output of the MS7001E gas turbine, so that a generator typical of the MS7001E can be used for calculations. The generator will be a hydrogen cooled, synchronous generator with the following rating:

102000 - 107000 KVA

0.9 power factor

3600 rpm

two poles, 3 phase,

60 Hz, 13800 Volts, WYE connection.

REPORTING CATEGORY XI

Technology Readiness Vehicle (GE-TRV-5) Design

System Design

As reported in Category X above, preliminary off-design and off-ambient cycles are being calculated. Results of these calculations, although very preliminary,

will be important in establishing requirements scope for many components. One area of concern is the condition after gas turbine startup on distillate and prior to fuel switchover. At this point, near no-load the air extraction to the gasifier is not compensated by a return low-Btu gas flow so the machine is operating far below design pressure ratio. The first level considerations of Combustion, Mechanical Design, Heat Transfer, Controls, Power Plant Engineering and Aerodynamics have been incorporated into the selection of the cycle point to be looked at first.

The effect of loss of coolant on the turbine operation is being addressed. A matrix is being developed that will identify potential causes and then for each of these potential causes the impact on operation, preventive measures and how detected.

Foreign object damage, FOD, is one such potential cause and this is being addressed. FOD expected in the HTTT nozzles and buckets appear to be of two major varieties:

(1) Plastic Flow/Delamination (Fig. 2)

(2) Crack Generation (Fig. 3)

Low velocity impact would generate Type 1 conditions, high velocity Type 2. The open literature should provide solutions for Type 1. An approximate closed form solution is being developed for Type 2.

It should be possible to predict damage levels as a function of velocity and particle geometry using the above analysis.

Overall Configuration

The first flange-to-flange cross-sectional drawing of the TRV-5 design was generated. The drawing was representative of a machine with three bearings, MS6000 compressor, and Aero basepoint (longest) hot gas path. A second configuration is being readied which will trade-off some efficiency to shorten the overall length of the machine and will have only two bearings.

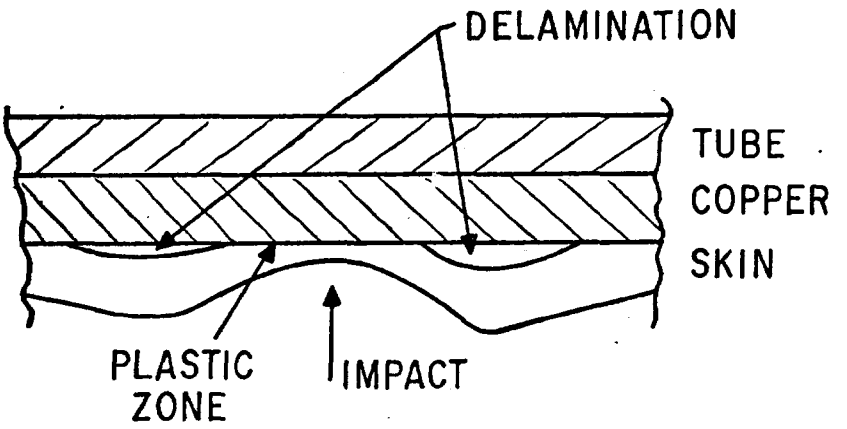

FIG. 2

CRACK OPENING MODES

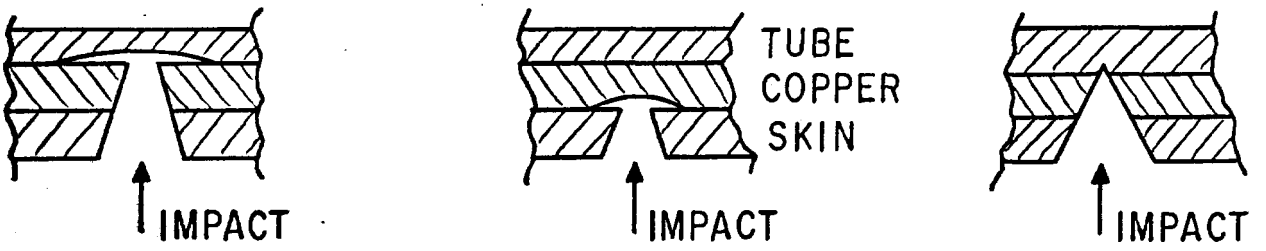

FIG. 3

Turbine Rotor

A literature search has been initiated to ascertain the effect of submersion/erosion on the endurance limit of the rotor materials. Studies are limited to B50A286 and IN706.

Combustor Design

The combustor exit temperature necessary to provide 2600°F total temperature at the first stage turbine bucket leading edge was computed to be 2700°F which includes 39°F for nonadiabatic walls in the first stage nozzle vanes and sidewalls, 42.9°F for 2.9% of compressor airflow as nonchargable leakage and wheelspace air admitted to the turbine upstream of the first stage bucket, 16.6°F for combustor exit plane seal leakage, and 2°F for combustor thermodynamic equilibrium heat release unavailable from complete chemical reaction and liberation of 100% of the fuel lower heating value.

These temperatures are based on the 127.5 Btu/scf minimum heating value recommended as the TRV design fuel. The stoichiometric fuel to air ratio is 0.66007 and the stoichiometric, adiabatic flame temperature is 3111°F in the 12 atm cycle.

Fundamental consideration of the low-Btu coal gas fluid dynamic and thermodynamic behavior within the combustor have led to additional, considerable temperature effects. Vorticity levels remaining in the gas stream after fuel-air mixing and vorticity generation or depletion within the reaction zone can vary sensible temperatures in the exit gas stream by more than 50°F. Also, the difference in gas temperature between thermodynamic equilibrium based on the overall equivalence ratio with 100% of the air entering the reaction, compared to a stoichiometric reaction to equilibrium and subsequent dilution without further chemical reaction of the excess air, results in a 30°F hotter gas total temperature. This is due to the monotonically increasing of specific heat of both air and combustion products with temperature. The actual temperature will be within the 30°F difference because some, but not all, of the secondary air will react. Secondary air is most of the excess air. The remainder is liner film cooling air which will only enter the reaction in a limited way. Probably 20°F or so above the overall equilibrium temperature may be expected. Both of the temperature effects will be included in phase II development test overall temperature measurements.

The base load cycle combustor requirements are now known, only the turn down ratio is needed to complete preliminary combustor flow scheduling. Final airflow splits for the combustor depend on the selected transfer point from conventional startup fuel to low-Btu gas, the required fuel flow, and extraction air schedules. Preliminary estimates of the flow splits will follow determination of the required low-Btu gas turn down ratio based on this transfer point part load fuel/air flow. The turn down ratio and exit temperature bracket the combustor limits. Combustor air flow splits and fuel staging, if necessary, will then be determined. This flow data is necessary before pressure field, geometry, heat transfer, and mechanical analysis can begin.

Review of the larger sized TRV combustion pressure vessel layouts with a potential casting vendor has determined that a high probability exists for being able to fabricate the pressure vessel as a one piece casting of IN 718. This would preclude the necessity to weld sections of the pressure vessel together in a region where the inner combustor panels will be placed. Tentative gating arrangements for the larger casting were also discussed and minor modifications to the external geometry of the pressure vessel were also identified. Casting of a preliminary trial piece to evaluate casting dimensional tolerance capabilities and macrodistortion of the pressure vessel walls was also discussed. As soon as the redesign of the combustor has been sufficiently detailed, a casting trial piece will be initiated to assess the dimensional tolerances both macro and to assess the integrity of the larger sized pressure vessel casting.

Water Distribution System

A comprehensive review was held of the entire rotor-bucket water distribution metering and recovery system. The objective of this review was to identify those areas of uncertainty which required either analytical or experimental investigation in order to assure a good design.

Some of these areas of uncertainty have to do with holding tolerances, dimensions and finishes to achieve required precision in division of water flows among wheels, buckets, and channels. Calculations will be made to quantify these areas for more complete understanding. Other areas have to do with potential flow phenomena such as instabilities, standing waves, surface tension effects, channel distribution with multiple drains, etc. Some of these areas will probably

require model testing. Finally, there are areas of potential problems due to sedimentation, erosion, shear atomization and other phenomena.

The work completed to date has been to summarize these areas of uncertainty and to order the problems for more effective analysis and test. For example, there are some phenomena which involve Coriolis accelerations which will probably require spinning models while others which do not particularly depend on Coriolis acceleration can be attacked in static models. Scaling laws for exact simulation have been derived for several of the cases. A comprehensive program addressing the total area of rotor-bucket water distribution is being prepared.

The enclosed flow map, Fig. 4, represents a first cut of the cooling air and water distribution of the TRV. Because, obviously, so little structure is defined at this time, these estimates are very preliminary. Enumerated below are the assumptions which produced the map:

(1) Heat input of the TRV (frame 5) is approximately half that of the PRD (frame 7), therefore, cooling water requirement is scaled by a half.

(2) Cooling water flow will be constant, independent of power. Bucket and nozzle LCF considerations will necessitate a re-evaluation of this assumption.

(3) Bore water cooling scheme precludes ducting cooling air through the turbine bore as in the MS6000 design; therefore, mid-section wheel-space air is carried through ducting in the nozzles.

(4) Because of hot gas path pressures, and in the interests of expediency, bleed air is extracted from the compressor discharge rather than the 13th or 14th stage which would require a compressor casing re-design.

(5) Wheelspace supply air will gain no heat in the passage through the nozzles because of water cooling.

(6) Fifth stage compressor air will be used for casing cooling and its exit temperature is estimated to be 340°F, close to the temperature of the outer casing.

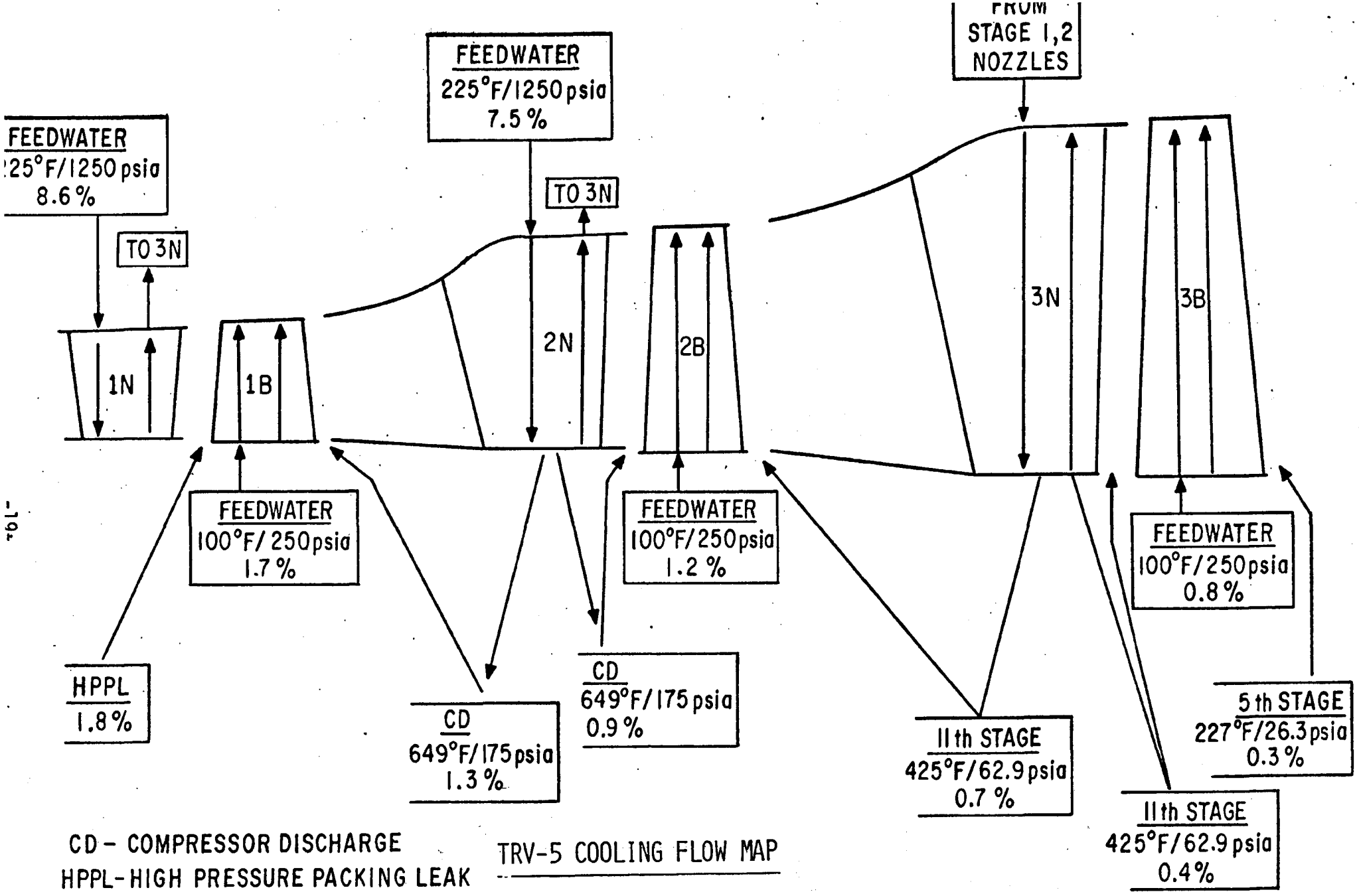

CD - COMPRESSOR DISCHARGE

HPPL - HIGH PRESSURE PACKING LEAK

TRV-5 COOLING FLOW MAP

W2 = 294 pps , ALL QUANTITIES SHOWN ARE GIVEN AS A PERCENT OF THIS QUANTITY , COMPRESSOR INLET FLOW

FIGURE 4

(7) Seal/Radius ratios are uniformly assumed to be .004 at the inlet side and .003 at the exhaust. This was based on previous GTD experience.

Once again, these are only very preliminary estimates but they should serve as a basis for feasibility studies.

First Stage Nozzle Design

Heat transfer data necessary for analysis of the endwalls are being acquired by the simplified localized ANSYS models shown in the October report. Effort has been concentrated on obtaining heat transfer data for the simple section of varying tube spacing. These data will be used to verify and if necessary modify the presently conceived endwall cooling circuits.

Computer modeling of the vane and trailing edge has begun. These will be used to assess the effects of different materials before the preferred materials and critical design parameters are established.

First Stage Nozzle and Bucket - Materials & Processing

Cu Alloy Development

The objective of this task is to develop, through process and alloy studies, a copper alloy which will satisfy the design requirements for the first stage nozzle and bucket of the TRV to be demonstrated in the HTTT Phase II program. To meet near-term prototype test objectives available Cu alloys must also be evaluated.

Screening evaluations of six currently available copper alloys have begun using tensile, stress-rupture and stability tests both with and without the anticipated HIP cycle required for component processing. The alloys selected for screening include precipitation hardened alloys (AMAX MZC, AMAX AMZIRC and Cu-Ni-Ti), oxide (Al_2O_3) dispersion strengthened alloys (Glidcop Al35 and Al60) and a potential cast alloy (Berylco 10C, Cu-Co-Be).

During the past month, the MZC, AMZIRC and Cu-Ni-Ti alloys were extruded and aged by AMAX and received for evaluation. Heat treatment studies to

determine the most desirable thermal cycle for achieving long-time stability and strength in these precipitation hardened alloys have been initiated. These studies will also assist in defining the influence of HIP cycle exposure on strength, etc. Hardness measurements and microstructural changes (grain size, precipitate size, etc.) will be used as a screening method. Once the best heat treatment compatible with anticipated HIP cycles is established, tensile, stress rupture and long-time stability tests (hardness with time at 800°F) will be conducted. Tensile and stress-rupture specimens from these three alloys in the as-processed (off-the-shelf) condition are currently being machined to establish baseline data.

Two extrusions of Al_2O_3 dispersion strengthened Cu have been made using Glidcop A135 and A160 powders. These extrusions will be used for LCF evaluations to be conducted under a separate task. The extrusion billets were prepared using optimized powder metallurgy procedures and then extruded at R&DC. The extrusions appeared completely sound and are currently being evaluated for possible TIP (thermal-induced-porosity) due to argon entrapped in the starting powder. Additional extrusions will be made for tensile and stress-rupture testing as well as thermo mechanical working trials.

Cooling Tube Evaluation

The objective of this task is to evaluate bonding methods for endwall/tube and copper/tube joints required for the first stage composite bucket and nozzle of the TRV. Metallurgical quality, stability, and reproducibility of welded, brazed and ADB joints between Monel 400, 304L stainless steel and A-286 thin wall tubing (0.007" wall) and IN-718 will be evaluated. Preliminary work including assessments of allowable fit-up tolerances, and other properties of the joint are in progress. Detailed plans for fabricating the junctures are being documented.

Near Net Shape Composite Development

The first step in the evaluation of the photo etching concept is to fabricate cylindrical test specimens representative of the composite structure of a water cooled bucket. This includes a laminate copper overlay, water cooling tubes, and an outer skin cladding. These shapes, once assembled,

will be processed through HIP Diffusion Bonding and heat treatment. A metallurgical analysis of the composite structure including determining its mechanical properties will be performed during the course of the task.

Process development to determine photo etching parameters, laminate stack up techniques, and diffusion bonding parameters will be performed as well.

Following evaluation of cylindrical shapes simulated TRV 1st stage buckets will be fabricated using the "Photo-Fabrication" technology demonstrated in the task. The prototype buckets shall have wherever possible design features critical to the fabrication of actual turbine hardware.

The delivery date for the .010" Glidcop 20 copper alloy sheet has been extended to December 2, 1977 due to strike difficulties at the suppliers facility.

The photo etching negatives for the cylindrical test, specimens have been received and initial chemical blanking tests have been successfully completed on sample pieces of Glidcop 20 alloy. This defines the required etching parameters for the copper laminate segments.

Ninety (90) percent of the machining required for the stainless steel sleeves and end plugs has been completed. In addition, initial welding parameters for joining the stainless steel tubes to the end plugs has been defined.

Wrought 5/8" diameter Glidcop 20 bar stock has been received. This material is currently being machined into creep specimens for comparative mechanical property testing. It is estimated that specimen preparation will be completed by December 15, 1977.

No significant problems have been encountered or anticipated in the program at this time.

During the month of December, assembly of cylindrical test specimens components will be initiated. If time permits diffusion bonding of the copper segments will be completed. (See Fig. 1)

First Stage Nozzle Manufacturing

Tube bending requirements were reviewed with three (3) speciality vendors - two (2) of which were ruled out due to lack of technical and manufacturing capability. Further vendor evaluation is required. As a result of discussions with vendors, preliminary tube bending capabilities have been outlined and given to Engineering to further refine current design work. Continuing to anticipate material procurement delays - an estimate of the gross material requirements have been made. The material will be ordered as soon as final identification is made - hopefully by the end of the year.

First Stage Bucket Design

Modeling of the preliminary airfoil pitch section trailing edge for strain analysis by the ANSYS finite element program is complete. Thermal results with this model compare favorably with previous THTD results. Strain solutions of the trailing edge model are in progress. Mesh generation of the balance of the pitch section model is about 30% complete.

Tube spacing at the pitch section have been calculated. Twenty-one (21) tubes maintain copper temperature below 800°F and surface temperature below 1000°F.

A one-dimensional heat transfer model of the bucket trailing edge hole was analyzed for the effect on surface temperature of increasing skin thickness. Should a lap joint at this location be a necessary fabrication feature, maximum surface temperature would meet design objectives.

A layout of the preliminary 1st stage bucket surface was generated. This developed shape, in 5X size, was wrapped around the 5X wooden model of the 1st stage bucket to check fit-up. Although compliance of this two-dimensional skin to the airfoil was close, it did point out that additional geometry effects would have to be considered if skin wrapping was the method selected for applying the skin.

1st Stage Bucket Manufacturing

It was established that the cladding or skin does not have to be produced from flat developed sheet stock. Stretching of the material is required to "set" the required shape. Localized stretching of the material has a minimal effect on wall thickness. Determining the correct developed length of material and

the amount of stretch is not an exact science. The alternate vendor for fabricating cladding has declined to participate in this development program due to production work load. Other sources need to be established.

Second Stage Nozzle Design

The initial Aerodynamic "baseline" gas path definition called for large side-wall overhangs and compound curvature of the outer isdewalls. Such designs not only would greatly complicate the fabrication but also requires a very complex design which would require extremely tight tolerances. Therefore, it has been decided that for the TRV, the outer sidewalls will be limited to conical and cylindrical type surfaces similar to those used in the Phase I design effort.

The specification for a physical model, which will be used to coordinate design and manufacturing effort, has been written and sent out for quotations.

Second Stage Nozzle - Materials & Processing

Several variations in investment casting the 2nd stage nozzles are being evaluated from a technical and cost viewpoint. These options include casting half of one or two of the endwalls as separate piece(s) which would be bonded to the mating piece in a subsequent operation. This construction would allow casting in place the cooling passages required in the endwalls and therefore minimize the required STEM or EDM hole drilling in the endwalls and allow easier location of STEM drilled airfoil holes. However, this construction (bonding multiple castings) would require high integrity bonds to hold the endwalls together due to the high water pressure ($\sim$1200 psi) and the outer endwall would require a higher strength bond since the nozzle is supported through the proposed bond area.

As these design/processing and cost trade-offs become quantified and the redesign of this component for the smaller sized TRV progresses a decision will be made defining the exact nozzle fabrication sequence.

Third Stage Nozzle

The last several passages in the airfoil trailing edge will be electrochemically machined, rather than cast in. Manufacturing analysis indicates that this is

the least risk of several alternatives. This approach will require a linear trailing edge, though the rest of the airfoil may be non-linear, at a minor penalty in manufacturability. Manufacturing is also recommending the simplification of the outer wall gas path contour. This would enhance producibility and reduce costs.

Third Stage Bucket - Materials & Processing

Work has begun to provide fundamental information on the mechanical properties, microstructural characteristics, grain size response to heat treating and attachment by brazing and welding of the required cooling hole plugs. The program will define processing requirements for attachment of plugs and cover-plates to machined parts, characterization of STEM drilled material, including limited LCF testing, an investigation of solution heat treating effects on IN718 mechanical properties, sampling of vendor-forged buckets, and as-needed forging vendor support.

A literature survey for joining of IN718 and the resultant mechanical properties has been initiated. Two HIP specimens of IN718 powder have been processed using different HIP cycles, and will be evaluated for Prior Particle Boundary (PPB). If PPB can be eliminated, specimens will be forged to assess Powder Metallurgy (P/M) for use in hardware. If not, fine grain forging methods will be investigated. Study of on-hand IN718 literature has begun to identify the effects of different solution treatments on short and long-time properties. Also considered in this work is the compatibility of different bonding thermal treatments and conditions associated with joining techniques.

Metallographic and SEM evaluations of STEM drilled holes in IN718 generated by Metem during Phase I studies has been initiated.

Third Stage Bucket Manufacturing

Cooling passages will be produced by electrochemical means. This requires that the wall thickness tolerances be adjusted to allow for the electrode drift, which will be .0015 - .002 inches per inch.

Non-Destructive Evaluation for Nozzles & Buckets - Materials & Processing

Measurements have been made of both the longitudinal and sheer acoustical velocities in IN718, IN671 and ODS copper. Both of the Inconel alloys were measured in the annealed and the heat treated conditions. Initial measurements on the A286, monel and stainless steel tubes were not successful because of the sharply curved radii of the inside and outside diameter. A set of cylindrical acoustic lenses are being fabricated to correct this problem. Their use will converge normally on the tube OD. When completed the acoustic measurements will permit theoretical modeling of the high temperature turbine water cooled bucket geometry to determine optimum test frequency, bandwidth and interrogating beam direction.

Nondestructive Test Development for the water cooling tubes has been identified as the most critical and the most difficult problem in this program. Examination of the IN671 skin on the surface and the copper to Inconel 718 spar bond both appear feasible providing a positioning device is used so that the entry beam is normal to the bucket surface. When the above acoustic velocity measurements have been completed, acoustic models will be developed to determine the feasibility of testing the tube to copper bonds from the bucket surface.

Supporting Technology - Nozzles & Buckets

Hot Particulate Erosion

A review was made of the model in which impactions of solid particle on a metal surface give rise to a removal of metal. From this prediction, equations were derived on the erosion resistance of materials. The correlating parameters which include particle size, velocity and density, gas stream temperature, specimen stagnation pressure and surface temperature result in complex interactions. The effect of increasing temperature which results in decreasing erosion rates and that of an oxidizing environment make the predictions difficult.

The proposed method of evaluating erosion resistance was examined. The apparatus is designed to provide simulated erosion environment by an electric arc heater which supplies high pressure hot gas and particles accelerated to high velocities in long nozzles. There are three possible instrumentations for the determination of particle velocity and distribution:

laser Doppler velocimetry, double pulsed holography and transit time correlation anemometry. The advantages and disadvantages of these measuring techniques are being evaluated.

Plasma Spray Development - Materials & Processing

The objective of this program is to determine the feasibility of plasma spray coating TRV hardware with IN671 coating material.

Material for plasma spray coating is being ordered. Both IN671 atomized powder, IN718 substrates and copper substrates are being procured for program initiation.

Metallurgical Support - Materials & Processing

The MS9001 nozzle cast of IN718 during phase I has been cut and is now being heat treated. Tests (mechanical property and metallography) are planned to investigate material response to conventional heat treatment and HIP processing. Drilling and joining studies, and procurement of cast test pieces should be formalized during December. This particular casting is representative of the PRD 3rd stage bucket as conceived during Phase I.

Bucket and Nozzle Corrosion Improvement

A literature review has been initiated, aimed primarily at the effect of gaseous environments and fused salt deposits on materials behavior in the 1000 to 1400F range. An initial objective is to characterize the temperature regimes of the classic corrosion cases: (i) SO_3/SO_3, (ii) alkali iron trisulphates, (iii) chlorine, (iv) fused sulfates and (v) vanadium compounds. The literature on Fireside Corrosion, Task I, at low temperatures is currently being reviewed.

REPORTING CATEGORY XII

Update Phase III Program Plan

Work is not scheduled to start until later in Phase II.

REPORTING CATEGORY XIII

Program Management

Several work packages were prepared and issued as Engineering Instructions (EI's) to the Materials and Processes Laboratory and Corporate Research and Development Laboratory. These included process development tasks relative to the composite structures to be utilized in the 1st Stage hardware and initial efforts requisite to Turbine Simulator Tests and Motorized Rig Tests.

Monthly Program meetings were initiated in November. Major technical and programmatic progress and problem areas are discussed and action items assigned for resolution.

REPORTING CATEGORY XIV

Documentation and Reports

Approval has been given by the DOE-HTTT Project Manager of the August - September 1977 Quarterly Report FE-1806-31. It will be issued early in the next reporting period.

REPORTING CATEGORY XV

Review and Evaluation

A Program Appraisal and Review (PAR) was held with Gas Turbine Division Management on November 2, 1977. This provided an update of program status subsequent to initiation of the Phase II effort. A technical meeting was held with the DOE-HTTT Project Manager on November 10, 1977. The major topic discussed was the TRV fuel selection. It was agreed to use a fuel with an LHV of 127.5 Btu/scf for the design of the TRV-5. A "Conference Report" documenting this meeting was prepared and submitted to D.O.E.

DISTRIBUTION LIST

for

MONTHLY PROGRESS REPORT

ON

DOE CONTRACT NO. EX-76-C-01-1806

(1) Assistant Administrator for Fossil Energy (AAFE)
U.S. DEPARTMENT OF ENERGY
400 1st Street, N.W.
Washington, D.C. 20545

(1) Contracting Officer Representative (COR)
T.J. Gallagher - SF-26
U.S. DEPARTMENT OF ENERGY
Office of Procurement Operations
400 1st Street, N.W.
Washington, D.C. 20545

(5) Project Manager (PM)
George Manning - SF-26
U.S. DEPARTMENT OF ENERGY
(Directorate)
400 1st Street, N.W.
Washington, D.C. 20545

(1) Patent Office
Assistant General Counsel for Patents
Office of the General Counsel
U.S. DEPARTMENT OF ENERGY
20 Massachusetts Avenue, N.W.
Washington, D.C. 20545

✓(2) Technical Information Center (TIC)
Special Assistant for Reproduction & Processing
U.S. DEPARTMENT OF ENERGY
P.O. Box 62
Oak Ridge, Tennessee 37830