EN-77-C-02-4299

KILOWATT ISOTOPE POWER SYSTEM

COMPONENT TEST REPORT FOR THE GROUND DEMONSTRATION SYSTEM ALTERNATOR STATOR

MASTER

JUN 1978
RECEIVED
Chicago Patent Group

KIPS

DISTRIBUTION OF THIS DOCUMENT IS UNLIMITED

Sundstrand Energy Systems
ROCKFORD, ILLINOIS
unit of Sundstrand Corporation

SUNDSTRAND®

78-KIPS-31

DISCLAIMER

This report was prepared as an account of work sponsored by an agency of the United States Government. Neither the United States Government nor any agency Thereof, nor any of their employees, makes any warranty, express or implied, or assumes any legal liability or responsibility for the accuracy, completeness, or usefulness of any information, apparatus, product, or process disclosed, or represents that its use would not infringe privately owned rights. Reference herein to any specific commercial product, process, or service by trade name, trademark, manufacturer, or otherwise does not necessarily constitute or imply its endorsement, recommendation, or favoring by the United States Government or any agency thereof. The views and opinions of authors expressed herein do not necessarily state or reflect those of the United States Government or any agency thereof.

DISCLAIMER

Portions of this document may be illegible in electronic image products. Images are produced from the best available original document.

NOTICE

"This document was prepared as an account of work sponsored by the United States Government. Neither the United States nor the United States Energy Research & Development Administration, nor any of their employees, nor any of their contractors, subcontractors, or their employees, make any warranty, express or implied, or assumes any legal liability or responsibility for the accuracy, completeness or usefulness of any information, apparatus, product or process disclosed, or represents that its use would not infringe privately-owned rights".

DISTRIBUTION

C. Alexander
A. Bartholomew
R. Beard
W. Boyes
R. Brouns (3)
J. Daniel
F. Dieringer
Director, Reactor Programs
  Division, Chicago Operations
  Office
T. Dobry (G. Ogburn)
M. Eck
E. Gallagher
J. Griffo
S. Gorland
R. Harner
E. Johnson
C. Jund (R. Widby)
D. Kenney
H. Kling
M. Langsam
R. Lawson
J. Lombardo
E. Mahefkey (B. McFadden)
R. Migra
R. Morrow
J. Mullin
B. Raab
H. Sampson
A. Schaffhauser
A. Schock
J. Sholtis
C. Tarr
N. Thielke

REPORT NO. AER 1504- 6
DATE 25 April 1978
REVISION _____ DATE _____
FILE REF. _____

SUNDSTRAND AVIATION
DIVISION OF SUNDSTRAND CORPORATION
ROCKFORD, ILLINOIS

DISCLAIMER
This book was prepared as an account of work sponsored by an agency of the United States Government Neither the United States Government nor any agency thereof nor any of their employees makes any warranty express or implied or assumes any legal liability or responsibility for the accuracy completeness or usefulness of any information apparatus product or process disclosed or represents that its use would not infringe privately owned rights Reference herein to any specific commercial product process or service by trade name trademark manufacturer or otherwise does not necessarily constitute or imply its endorsement recommendation or favoring by the United States Government or any agency thereof The views and opinions of authors expressed herein do not necessarily state or reflect those of the United States Government or any agency thereof

ENGINEERING REPORT

ACCEPTANCE TEST REPORT
OF THE SUNDSTRAND ALTERNATOR
STATOR, P/N 719134, S/N 002, FOR THE
KILOWATT ISOTOPE POWER SYSTEM
MODEL NUMBER ORC1A3A01

CONTROLLED DISTRIBUTION COPY
FOR: _____
APPROVED _____
CONTRACT DATA MANAGER DATE

DISTRIBUTION OF THIS DOCUMENT IS UNLIMITED

78-KIPS-31

APPROVAL AND CLASSIFICATION

Internal Distribution Only	VICE PRES. OF ENGRG	DATE
Controlled Distribution (See EN 10.07)	[signature] VICE PRES OF ENGRG	30 MAY 78 DATE
Distribution Prohibited	VICE PRES. OF ENGRG	DATE

tary Contract No. N/A

Witnessed by me or by one under my Supervision N/A
QAR DCASO ROCKFORD DATE

Edwin L. Brainard PREPARED BY	4-27-78 DATE
John Monnema KIPS RELIABILITY ENGINEER	5-22-78 DATE
C. T. Dolan / AK R. L. Sorenson GROUP ENGINEER	3 May 78 DATE
Kenny Van Kenny C. L. McGee SECTION MANAGER	5/3/78 DATE
George S. Kemp ENERGY SYSTEM CHIEF ENGINEER	5/25/78 DATE
[signature] KIPS PROGRAM MANAGER	5/31/78 DATE
for John C. Boase QUALITY ASSURANCE MANAGER	5/26/78 DATE

TABLE OF CONTENTS

PARAGRAPH		PAGE
1.0	PURPOSE	2
2.0	CONCLUSIONS	3
3.0	TEST DESCRIPTION	4
3.1	APPLICABLE DOCUMENTS	4
3.2	FACILITIES	5
4.0	TEST PROCEDURE	6
5.0	TEST RESULTS	7
5.1	OPEN CIRCUIT SATURATION CURVE	7
5.2	PHASE BALANCE	7
5.3	SHORT CIRCUIT TEST	7
5.4	LOAD AND EFFICIENCY TESTS - SEPARATELY EXCITED	8
5.5	LOAD AND EFFICIENCY - WITH CONTROLLER	8
5.6	DIELECTRIC TEST	9
5.7	INSULATION RESISTANCE	9
APPENDIX I	TABLES AND FIGURES	10
APPENDIX II	TS 2538 WITH TEST DATA SHEETS	11

1.0 PURPOSE

The purpose of this test was to demonstrate that the Alternator Stator has satisfactory completed sufficient testing to satisfy the requirements set forth within the Kilowatt Isotope Power System (KIPS), Component Test Specification for the GDS Alternator Stator (TS 2538).

This report, one of a series, presents the results of the Acceptance Tests conducted on the Alternator Stator, S/N 002.

2.0 CONCLUSIONS

The Alternator Stator, S/N 002 for the Kilowatt Isotope Power System has satisfactorily completed the testing set forth within Sundstrand Test Specification 2538. Test requirements of TS 2538 were extracted from the Kilowatt Isotope Power System, Phase I Test Plan.

3.0 TEST DESCRIPTION

The Alternator Stator, Sundstrand P/N 719134, S/N 002, was subjected to the testing outlined within Paragraph 4.0 of this document.

3.1 Applicable Documents

All referenced documents used in the performance of the testing were the latest approved versions:

AER 1342	Kilowatt Isotope Power System Ground Demonstration Test Plan
719134	Sundstrand Drawing Number of the Alternator Stator
CP14.57-1	General Precision Cleaning (KIPS) Procedure and Requirements
M-005	Sundstrand Aviation Instrument Calibration Frequency Schedule
Document 8.01	Quality Assurance - Instrumentation Calibration Procedure
QA5-107335	Sundstrand Quality Assurance Program Plan, Applicable to KIPS
MIL-L-23699	Lubricating Oil, Aircraft Turbine Engine, Synthetic Base

3.2 Facilities

3.2.1 Instrumentation

The instrumentation used in the performance of the tests is listed in Table I, page 1 of Appendix I.

3.2.2 Test Equipment

Test equipment utilized during testing was as shown in Table II, page 3 of Appendix I.

None of the test equipment was considered as being under any test requirement.

4.0 TEST PROCEDURE

The test procedure was as shown within TS 2538, which is reproduced as Appendix II of this document.

5.0 TEST RESULTS

5.1 Open Circuit Saturation Curve

Testing was completed without any out of specification conditions recorded.

Test data sheets are reproduced as pages 17 through 22 of Appendix II. The open circuit saturation curve is presented as Figure 3 of Appendix I. The slight variation between the three line-to-line voltages at high saturation levels is due to the allowable 1% speed variation.

5.2 Phase Balance

The three line phase balance, as determined from the testing conducted in Paragraph 5.1, and from the Open Circuit Saturation Curve (Figure 3 of Appendix I), was within specified limits. Data sheets are shown as pages 17 through 22 of Appendix II.

5.3 Short Circuit Test

This test was completed without incident. Test data sheet is reproduced as pages 23 of Appendix II.

5.4 Load and Efficiency Tests - Separately Excited

Testing was conducted with the following load conditions: seven no-load and seven 1500 watt loads, alternately; seven no-load and seven 500 watt loads, alternately; seven no-load and seven 1000 watt loads, alternately; followed by seven no-load and seven 2200 watt loads, alternately. Testing was completed without incident.

Test data sheets are shown as pages 24 through 79 of Appendix II.

5.5 Load and Efficiency - With Controller

This test sequence was similar to Paragraph 5.4 testing seven no-load and seven 1300 watt loads; seven no-load and seven 500 watt loads, seven no-load and seven 900 watt loads followed by seven no-load and seven 2000 watt loads.

Test data sheets are reproduced as pages 80 through 135 of Appendix II. A graph showing efficiency of the alternator with and without the controller is reproduced as Figure 4 of Appendix I.

5.6 Dielectric Test

The Dielectric Test of the phase leads and field leads to the frame was satisfactorily completed.

Test data sheet is reproduced as page 136 of Appendix II.

5.7 Insulation Resistance

This test was also satisfactorily concluded. Test data is presented on page 136 of Appendix II.

APPENDIX I

TABLES AND FIGURES

TABLE OF CONTENTS

		PAGE
TABLE I	INSTRUMENTATION	1
TABLE II	TEST EQUIPMENT	3
FIGURE 1	ELECTRICAL SCHEMATIC FOR SEPARATE EXCITATION	4
FIGURE 2	ELECTRICAL SCHEMATIC WITH CONTROLLER	5
FIGURE 3	OPEN CIRCUIT SATURATION CURVE	6
FIGURE 4	EFFICIENCY VS AC LOAD	7

INSTRUMENTATION

TYPE	PURPOSE	MANUFACTURER	MODEL, S/N, P/N	RANGE	ACCURACY	CALIBRATION	
						LAST	DUE
Torque Table	Measure Torque, Sensor	Lebow	Model 2528-102	0-100 IN-LB.	Calibrated to 0.01% as system	3/8/78	8/2/78
Torque Readout	Display Torque Measured	Daytronic	Model 300D S/N BAT6C331	0-100 IN-LB.	±2% of reading	3/8/78	8/2/78
Counter	Count Frequency	Anadex	Model CF-601R S/N K-199	0-9999 Hz	Within 9 counts	12/7/77	3/27/78
Flowmeter	Measure Hydraulic Oil Flow	Cox	Model ANC16	0-60 GPM	±½% of reading	3/15/78	10/18/78
Counter	Oil Flow	Hewlett Packard	Model 521A	0-9999 counts	Within 9 counts	3/16/78	7/5/78
Meter	Measure RMS Volts, RMS Amps, AC Power	Yokogawa Electric Works, Ltd.	Type 2503, S/N VAW-7	Volts Amps Watts	±0.25% F.S. ±0.25% F.S. ±0.25% F.S.	3/16/78	10/18/78
Meter (with external shunt)	DC Ammeter	Weston	Model 901, S/N AE-7	0-15 Amps	±0.25% F.S.	3/15/78	10/18/78
Meter	DC Ammeter	Weston	Model 931 S/N AE-609	0-10 Amps	±0.25% F.S.	3/1/78	10/4/78
Meter	DC Voltmeter	Weston	Model 901 S/N VE-538	0-30 Volts	±0.25% F.S.	9/6/77	4/5/78
Meter	DC Voltmeter	Weston	Model 901 S/N VE-714	0-50 Volts	±0.25% F.S.	9/12/77	4/12/78

TABLE I

100373

INSTRUMENTATION

TYPE	PURPOSE	MANUFACTURER	MODEL, S/N, P/N	RANGE	ACCURACY	CALIBRATION	
						LAST	DUE
Gauge	Measure Alternator Vacuum/ Pressure during Fill	Supergage	S/N PG-186	-30 IN.HG. 0-30 PSIG	$\pm$1% F.S.	10/6/ 77	8/9/ 78
Current Transformer (3)		Weston	Model 461 S/N 19361 S/N 20146 S/N 26193	15 Amp Capacity at 25-500 Hz	$\pm$0.2% F.S.	N/A	N/A
Temperature Readout	Monitor Alternator Temps.	Doric Trendicator 400	Type K/^{o}F S/N T-146	0-400°F	$\pm$2°F F.S.	3/28/ 78	5/10/ 78

TABLE I (Continued)

100373

TEST EQUIPMENT

ITEM	PURPOSE	MANUFACTURER	MODEL, S/N, P/N	RANGE, CAPACITY, RESPONSE, ACCURACY
Air Motor	Drive Alternator	Barbour-Stockwell	S/N 1571-2	5 Hp, 100,000 RPM
Load Bank	AC Loads	Sundstrand	- - -	- - -
Load Bank	DC Loads	Sundstrand	- - -	- - -
DC Power Supply	Supply Alternator Excitation	Trygon Electronics	Model HR40-5B	0-40 VDC, 5 Amps
Hydraulic Lube Rack	Heat/Cool Alternator Oil	Sundstrand	- - -	- - -

TABLE II

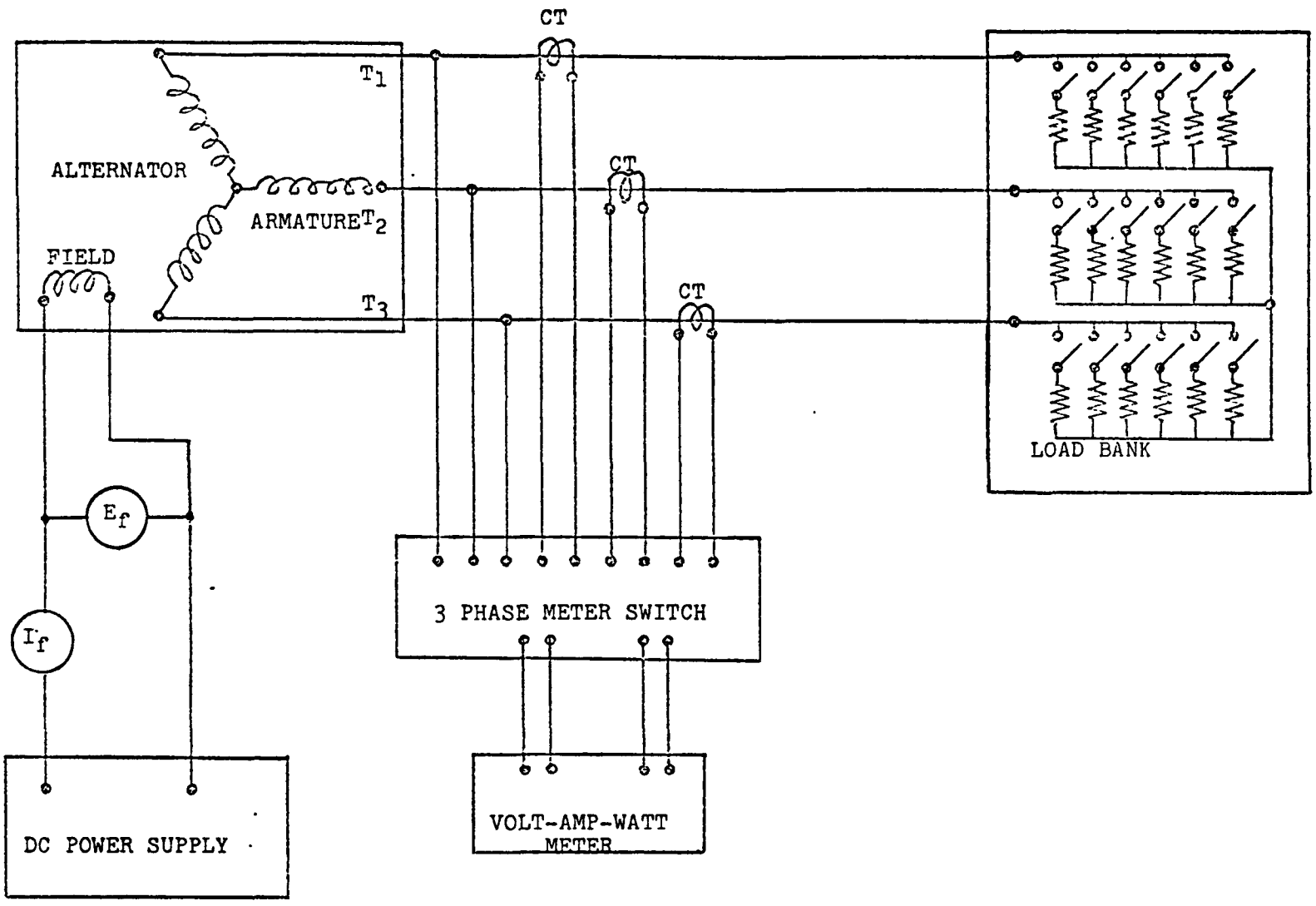

ELECTRICAL SCHEMATIC
FOR SEPARATE EXCITATION

FIGURE 1

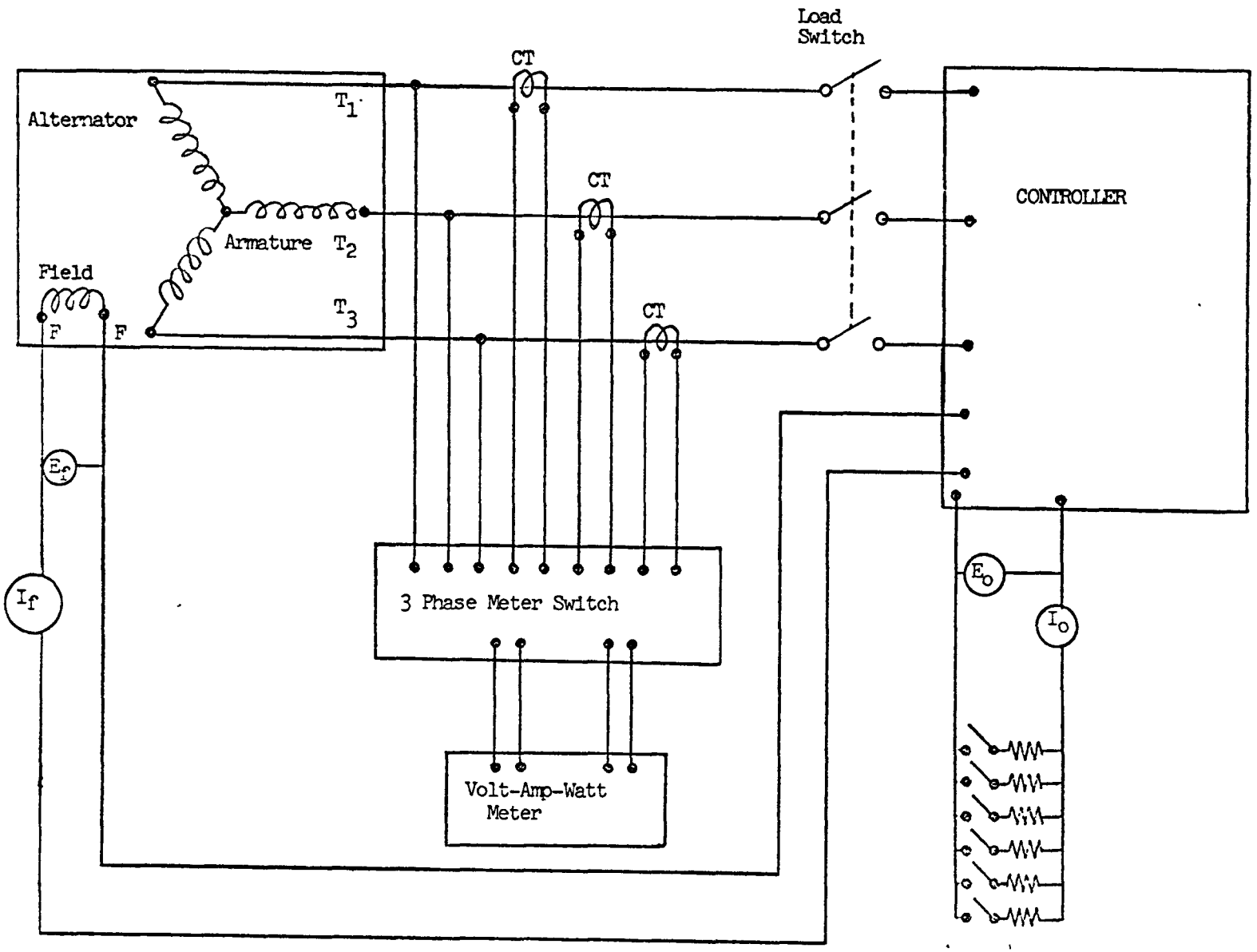

ELECTRICAL SCHEMATIC WITH CONTROLLER

FIGURE 2

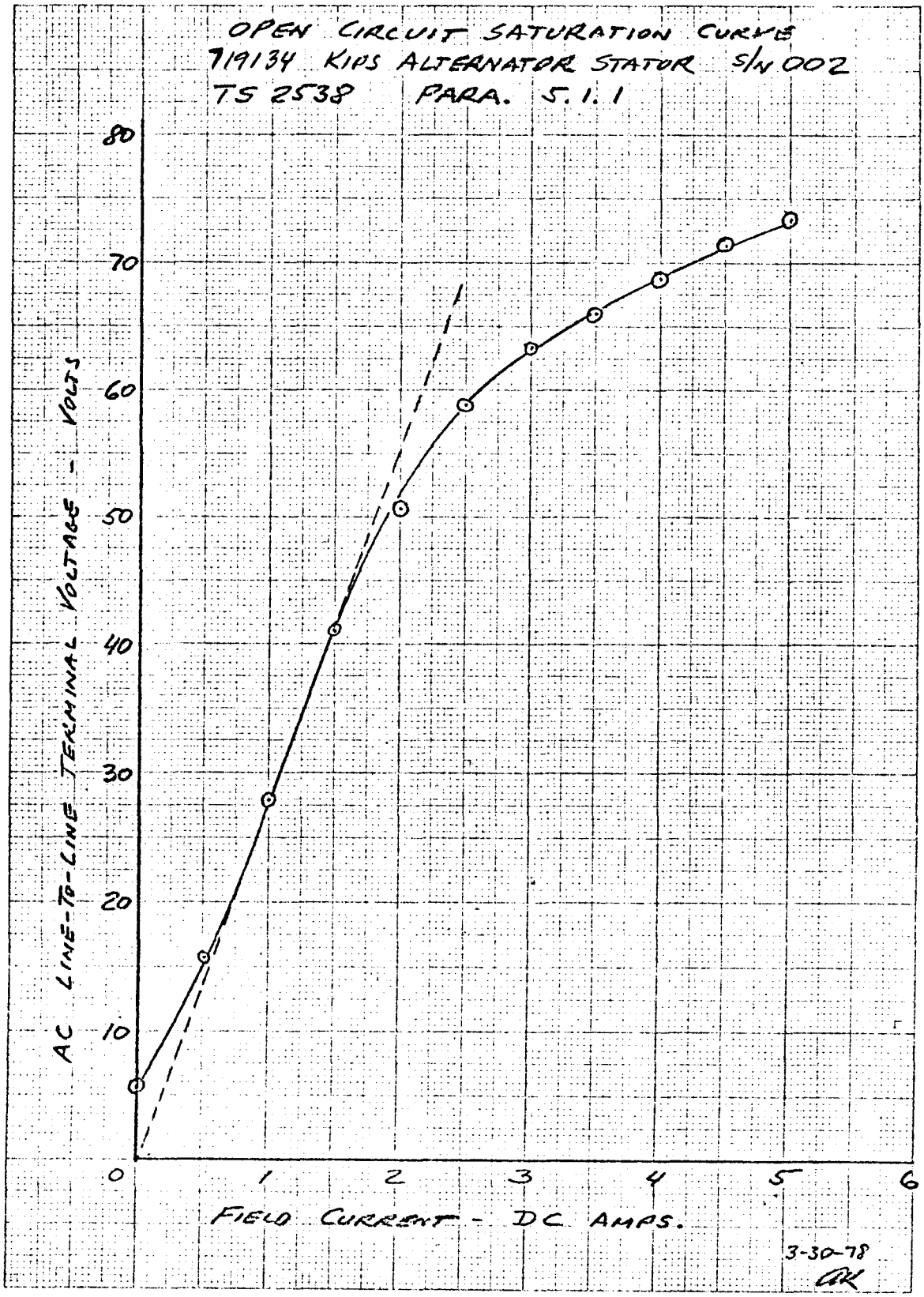
OPEN CIRCUIT SATURATION CURVE
719134 KIPS ALTERNATOR STATOR S/N 002
TS 2538 PARA. 5.1.1
AC LINE-TO-LINE TERMINAL VOLTAGE - VOLTS
80
70
60
50
40
30
20
10
0
1
2
3
4
5
6
FIELD CURRENT - DC AMPS.
3-30-78
AK

FIGURE 3

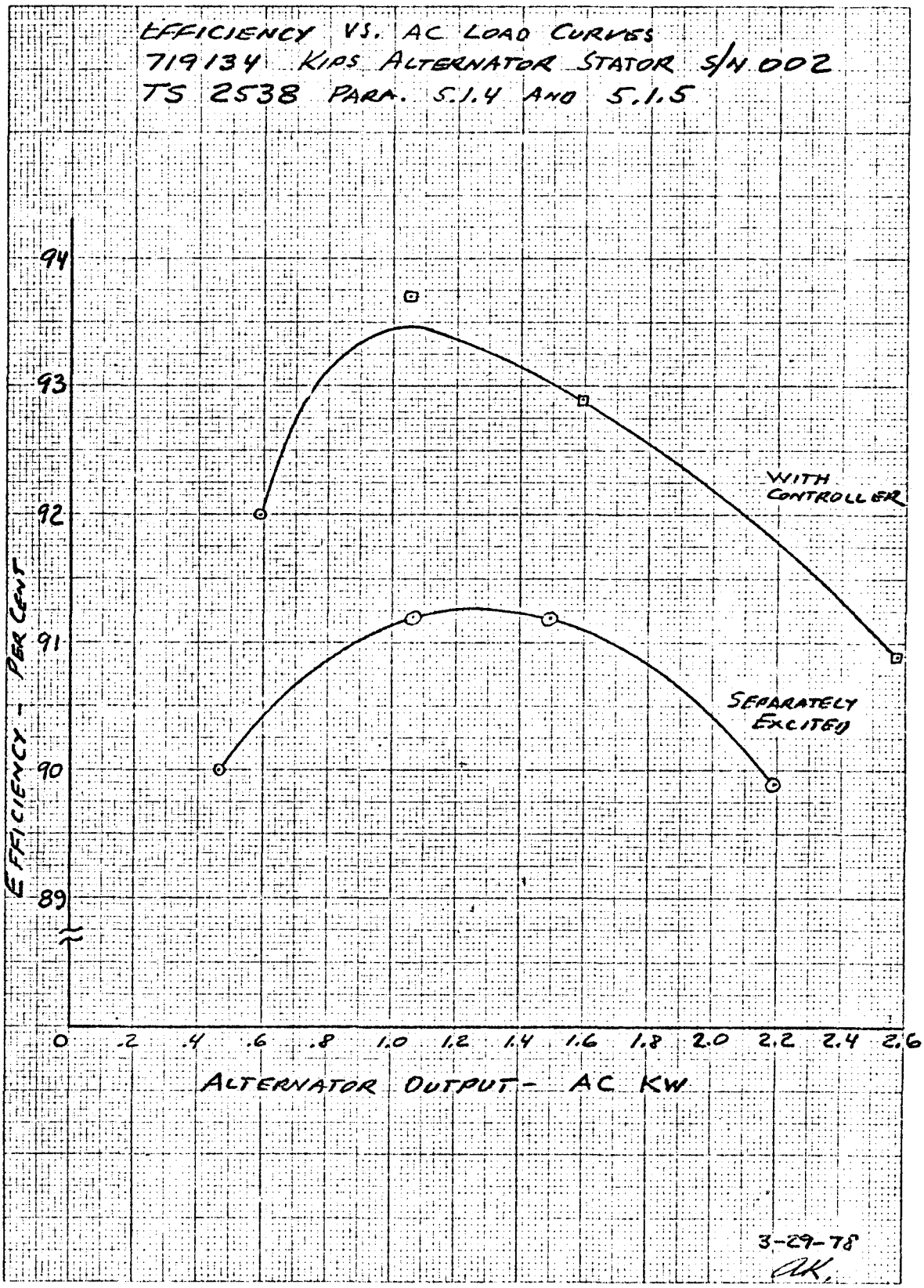
EFFICIENCY VS. AC LOAD CURVES
719134 KIPS ALTERNATOR STATOR S/N 002
TS 2538 PARA. 5.1.4 AND 5.1.5
94
93
92
91
90
89
EFFICIENCY - PER CENT
WITH CONTROLLER
SEPARATELY EXCITED
0
.2
.4
.6
.8
1.0
1.2
1.4
1.6
1.8
2.0
2.2
2.4
2.6
ALTERNATOR OUTPUT - AC KW
3-29-78
AK.

FIGURE 4

APPENDIX II

TS 2538 WITH TEST DATA SHEETS

DATE 5/16/77

Sundstrand Corporation
Advanced Technology Group

- SUNDSTRAND AVIATION ELECTRIC POWER
- SUNDSTRAND AVIATION MECHANICAL
- SUNDSTRAND ENERGY SYSTEMS
- SUNDSTRAND OPERATIONS
- SUNDSTRAND MACHINE TOOL

4747 HARRISON AVENUE • ROCKFORD, ILLINOIS 61101
(815) 226-6000 • TWX 910-631 4255 • TELEX 257-440

TEST SPECIFICATION NUMBER 2538 A

TITLE:

TEST PROCEDURE AND TEST DATA SHEETS FOR ACCEPTANCE TEST OF SUNDSTRAND ALTERNATOR STATOR P/N 719134, MODEL NUMBER ORC1A3A01

APPROVALS

5-16-77	6-15-77	6-8-77
Rel Engr 7-15-77	QUALITY ASSURANCE	ENGINEERING

CHANGE RECORD

TSC NO.	DATE	SYMBOL	PAGES AFFECTED
4111	10/13/77	A	2,5,6,7,8,10,11,12,14,17 through 135.

FORM 5098E

NOTICE

"This document was prepared as an account of work sponsored by the United States Government. Neither the United States nor the United States Energy Research & Development Administration, nor any of their employees, nor any of their contractors, subcontractors, or their employees, make any warranty, express or implied, or assumes any legal liability or responsibility for the accuracy, completeness or usefulness of any information, apparatus, product or process disclosed, or represents that its use would not infringe privately-owned rights".

KIPS TEST PROCEDURE

Distribution

R. C. Brouns (3 copies)

N. R. Thielke

F. M. Dieringer

T. Dobry

A. Schock

M. A. Langsam

TABLE OF CONTENTS

PARAGRAPH		PAGE
1.0	GENERAL	2
1.1	PURPOSE	2
2.0	REFERENCED DOCUMENTS	2
3.0	ASSOCIATED EQUIPMENT	3
4.0	INSTRUMENTATION	3
5.0	TEST PROCEDURES	5
5.1	OPERATING TESTS	5
5.1.1	OPEN CIRCUIT SATURATION	5
5.1.2	PHASE BALANCE	6
5.1.3	SHORT CIRCUIT TEST	6
5.1.4	LOAD AND EFFICIENCY TESTS - SEPARATELY EXCITED	7
5.1.5	LOAD AND EFFICIENCY TESTS - WITH CONTROLLER	9
5.1.6	DIELECTRIC TEST	13
5.1.7	INSULATION RESISTANCE TEST	14
	TEST DATA SHEETS	17

TEST PROCEDURE AND TEST DATA SHEETS FOR ACCEPTANCE TEST OF SUNDSTRAND ALTERNATOR STATOR P/N 719134, MODEL NUMBER ORC1A3A01

1.0 GENERAL

1.1 Purpose

The intent of this document is to formulate test procedures to ensure that the Alternator Stator, P/N 719134, satisfies the requirements set forth within the KIPS Phase I Program Plan.

2.0 REFERENCED DOCUMENTS

All referenced documents used in the performance of the tests specified herein shall be to their latest approved revision.

	KIPS Phase I Program Plan
CP14.57-01	General Precision Cleaning, KIPS
M-005	Sundstrand Aviation Instrument Calibration Frequency Schedule
MIL-L-23699	Lubricating Oil, Aircraft Turbine Engine, Synthetic Base

A

3.0 ASSOCIATED EQUIPMENT

1) Test Stand - "T" table plus necessary air supply and controls for operation of air motor, cooling oil recirculating system and vacuum pump(s) for evactuating the Alternator housing.

2) Air Motor - Barbour Stockwell S/N 1571-2, 5 HP, 100,000 RPM or equivalent

3) Instrument Console - Sundstrand S/N EP5161-691-09-01, which contains phase meter switching, temperature readout, overspeed protection, fuses, etc.

4) Alternator Test Rig Assembly - Sundstrand P/N EP2605-8000.

5) Breadboard Controller - Sundstrand P/N EP2605-0000.

6) DC Power Supply - Mid Eastern Industries P/N HW40-5A (40 volts - 5 amps) or equivalent.

7) AC Load Bank - Three (3) phase, resistive, Wye-connected, each phase individually adjustable.

8) DC Load Bank - Sundstrand P/N EP5161-336-1, variable loads.

4.0 INSTRUMENTATION

1) Torque Table - Lebow Model 2528-102, range 0-100 IN-LB.

2) Torque Readout - Daytronic Type 91 Strain Gage Transducer Input Module with a Model 300D Transducer Amplifier Indicator

4.0 INSTRUMENTATION (Continued)

3) Frequency Counter - Anadex Model CF601R, Accuracy ±9 PPM, ±1 count or equivalent

4) Temperature Readout - Love Controls Corp. Model 100, Electronic Indicator (0-400°F), Accuracy ±2°F of F.S.

5) Current Transformers - Weston Model 461, Type II, 400 Hz or equivalent, Accuracy ±0.2% of F.S.

6) AC Power Meter (Volts-Amps-Watts) - Yokogawa Electric Works, Ltd, Type 2503, Digital AC Power Meter, Accuracy ± 0.5% of F.S.

7) DC Voltmeter - Weston Model 901, Range 0-30 VDC, Accuracy ±0.25% of F.S.

8) DC Voltmeter - Weston Model 901, Range 0-50 VDC, Accuracy ±0.25% of F.S.

9) DC Ammeter - Weston Model 931, Range 0-10 Amps, Accuracy ±0.25% of F.S.

10) DC Ammeter - Weston Model 931, Range 0-75 Amps, Accuracy ±0.25% of F.S.

11) Shunt - Weston, 75 Amps, 50 Millivolts.

12) High Resistance Meter - Hewlett Packard Model 4329A.

13) Flow Meter, Cox 0-60 GPM, 1% of full reading.

5.0 TEST PROCEDURE

NOTE: ALL INSTRUMENTATION SHALL BE LOCATED A MINIMUM OF FOUR (4) FEET FROM THE ALTERNATOR.

5.1 Operating Tests

Unless otherwise specified, the following conditions shall apply when operating the Alternator:

1) Input Speed - 33,700 ± 300 RPM

2) Alternator Housing Internal Pressure - 21 in. Hg. vacuum minimum

3) Rotation - Counter Clockwise (CCW) when viewed from the drive end.

4) Cooling - MIL-L-23699 oil at 50 ± 5 PSI inlet pressure and inlet oil temperature at 190±40°F. A

5) Nominal Voltage Rating - 22.5 ± 0.5 VAC, L-L.
6) Bearing Lube (Dowtherm) Flow - .035 ± .005 GPM. A

5.1.1 Open Circuit Saturation Curve

Connect the Alternator per Figure 1, page 15.
Using the variable DC power supply, excite the Alternator in increments of 0.5 amps to a maximum of 5 amps. CAUTION: Set desired value of field current by adjusting upward from a lower value; never by adjusting downward from a higher value. If desired value of field current is accidentally exceeded, reduce to zero and carefully adjust upward until desired value is reached. The following shall be recorded on the appropriate data sheet for each 0.5 amp increment:

1) Line to line AC volts between T_1-T_2, T_1-T_3 and T_3-T_2.

2) DC field current

3) DC field voltage

4) Speed (RPM)

5) Stator Winding Temperature (°F)

6) Cooling Oil Flow (GPM)

7) Cooling Oil temperature (°F)

8) Cooling Oil Out Temperature (°F) A

5.1.1 Open Circuit Saturation Curve (Continued)

With the rated voltage of 22.5 VAC, the field current shall be a maximum of 1.0 amps.

With the maximum field excitation of 5.0 amps, the terminal voltage shall be 70 VAC minimum.

Remove the field excitation. Record residual output voltage at T_1-T_2, T_1-T_3 and T_3-T_2

5.1.2 Phase Balance

From the data recorded in Paragraph 5.1.1, determine the terminal voltage balance at 22.5 VAC

The three line to line voltage shall be 22.5 $\pm$ 0.2 VAC. A

5.1.3 Short Circuit Test

NOTE: TEST DURATION SHALL NOT EXCEED 5 MINUTES.

Connect a three phase short circuit on the load side of the current transformers.

Excite the Alternator with 5.0 amps DC. Record the following on the appropriate data sheet:

1) Short Circuit Currents* (AMPS)

2) Field Current (AMPS)

3) Field Voltage (VDC)

4) Speed (RPM)

5) Winding Temperatures (^{o}F)

*Short Circuit Current shall be 120 amps minimum.

5.1.3 Short Circuit Test (Continued)

Remove the excitation input. Record residual short circuit current. Remove the three phase short circuit connections from the current transformers.

5.1.4 Load and Efficiency Tests - Separately Excited

5.1.4.1 Rated Load Efficiency (1500 Watts)

Connect the Alternator as shown in Figure 1, page Operate the Alternator per Paragraph 5.1.

Apply a three phase balanced load of 22.5 VAC, 38.5 amps and 1500 watts at 1.0 power factor (P.F.) Operate until winding temperature has stabilized. (Stabilization is defined as a temperature change of less than 2°F in a 5 minute period.)

Remove Alternator load, de-excite and stop rotation. Maintain the internal pressure of the Alternator housing and the cooling oil flow.

Using deadweights, calibrate the torque table and readout system.

Test A

Operate the Alternator at no load and de-excited. Record the following:

1) Residual voltage (VAC)

2) Speed (RPM)

3) Torque (IN-LBS)

4) Alternator housing internal pressure (In. Hg)

5) Winding Temperature (°F)

6) Cooling Oil Flow (GPM)

7) Cooling Oil Temperature (°F)

8) Cooling Oil Out Temperature (°F) A

5.1.4.1 Rated Load Efficiency (1500 Watts) (Continued)

Test B

Apply a balanced three phase load of 22.5 volts, 38.5 amps and 1500 watts at 1.0 P.F. and record the following:

1) AC Volts
2) AC Amps
3) AC Watts
4) DC Field Volts
5) DC Field Amps
6) Speed (RPM)
7) Torque (IN.LBS)
8) Alternator Housing Internal Pressure (In.Hg)
9) Winding Temperatures (^{o}F)
10) Cooling Oil Flow (GPM)
11) Cooling Oil Inlet Temperature (^{o}F)
12) Cooling Oil Out Temperature (^{o}F) A

Remove load and de-excite Alternator. Record Tests A and B six additional times.

For each of the load tests above, compute the efficiency of the Alternator as follows:

$$\% \text{ EFF.} = \frac{(W_1 + W_3)\,100}{\dfrac{\left[T_{FL} - \dfrac{(T_{NL1} + T_{NL2})}{2}\right] \text{RPM } (746)}{63000} + E_f I_f}$$

T_{NL1} = No Load Torque from Test immediately preceding Load Test.

T_{NL2} = No Load Torque from Test immediately following Load Test.

T_{NL1}, T_{NL2}, T_{FL} = INCH-LBS.

5.1.4.1 Rated Load Efficiency (1500 Watts) (Continued)

The field current at rated load shall be 1.90 amps maximum.

5.1.4.2 500 Watt Load Test

Repeat the test procedure of Paragraph 5.1.4.1 except the Alternator load shall be 22.5 VAC, 12.8 Amps and 500 watts at 1.0 P.F.

With a 500 watt load, the field current shall be a maximum of 1.10 amps.

5.1.4.3 1000 Watt Load Test

Repeat the test procedure of Paragraph 5.1.4.1 except the Alternator load shall be 22.5 VAC, 25.7 amps and 1000 watts at 1.0 P.F.

With a 1000 watt load, the field current shall be a maximum of 1.45 amps.

5.1.4.4 2200 Watt Load Test

Repeat the test procedure of Paragraph 5.1.4.1 except the Alternator load shall be 22.5 VAC, 56.5 amps and 2200 watts at 1.0 P.F.

With a 2200 watt load, the field current shall be a maximum of 2.6 amps.

5.1.5 Load and Efficiency Tests - With Controller

5.1.5.1 Rated Load Efficiency - 1300 Watts

Connect the Alternator and Controller as shown in Figure 2. Operate per Paragraph 5.1. The PLR is to be disconnected and the speed manually controlled during efficiency tests.

Apply a DC load of 46.4 amps at 28 volts DC to the Alternator-Controller System and allow the winding temperature to stabilize.

Remove load, de-excite and stop rotation.

5.1.5.1 Rated Load Efficiency - 1300 Watts (Continued)

Maintain the Alternator internal pressure and the cooling oil flow.

Using deadweights, calibrate the torque table and readout system.

Test A

Operate the Alternator at no load and de-excited. Record the following parameters:

1) Residual Voltage (VAC)

2) Speed (RPM)

3) Torque (in.lbs.)

4) Winding Temperatures (^{o}F)

5) Alternator Housing Internal Pressure (In.Hg)

6) Cooling Oil Flow (GPM)

7) Cooling Oil In Temperature (^{o}F)

8) Cooling Oil Out Temperature (^{o}F) A

Test B

Apply a DC load of 46.4 amps to the Alternator and record the following:

1) DC Volts

2) DC Amps

3) AC Volts

4) AC Amps

5) AC Watts

6) DC Field Volts

7) DC Field Amps

5.1.5.1 Rated Load Efficiency - 1300 Watts (Continued)

Test B (Continued)

8) Torque (in.lbs.)

9) Speed (RPM)

10) Winding Tempertures (^{o}F)

11) Alternator Housing Internal Pressure (In.Hg.)

12) Cooling Oil Flow (GPM)

13) Cooling Oil Inlet Temperature (^{o}F)

14) Cooling Oil Out Temperature (^{o}F) A

Remove load and de-excite alternator. Repeat Tests A and B six additional times.

For each of the above tests, compute the efficiency as in Paragraph 5.1.4.1.

The field current at rated load shall be 1.6 amps maximum. A

5.1.5.2 500 Watt Load Test

Repeat the test procedure of Paragraph 5.1.5.1 except the Alternator load shall be 17.9 amps DC, at 28 VDC.

With a load of 500 watts, the field current shall be 0.7 amps maximum. A

5.1.5.3 900 Watt Load Test

Repeat the test procedure of Paragraph 5.1.5.1 except the Alternator load shall be 32.1 amps DC at 28 VDC.

With a load of 900 watts, the field current shall be 1.2 amps maximum. A

5.1.5.4 2000 Watt Load Test

Repeat the test procedure of Paragraph 5.1.5.1 except the Alternator load shall be 71.4 amps DC at 28 VDC.

With a load of 2000 watts, the field current shall be 2.5 amps maximum. A

5.1.6 Dielectric Test

This test shall be performed while the Alternator is still hot as a result of the preceding tests.

1. Disconnect the Alternator power and field leads. Disconnect all test equipment and instrumentation.

2. Connect the three phase leads together. Apply 600 volts, 60 Hz, for a one second period, between the phase leads and the alternator frame.

3. Connect the two field leads together. Apply 600 volts, 60 Hz, for a one second period, between the field leads and the alternator frame.

There shall be no indication of insulation breakdown. Maximum allowable leakage current shall be 15 milliamps.

5.1.7 Insulation Resistance Test

This test shall be conducted after the Alternator has stabilized at room temperature.

1. Connect the three phase leads together. Measure and record the armature insulation resistance at test voltages of 25, 50, 100, 250, and 500 VDC.

2. Connect the two field leads together. Measure and record the field coil insulation resistance at test voltages of 25, 50, 100, 250, and 500 VDC.

Insulation resistance shall be 10 Meg-ohms minimum. A

(Insulation resistance shall be measured with a Hewlett Packard Model 4329A, High Resistance Meter, or equivalent instrumentation.)

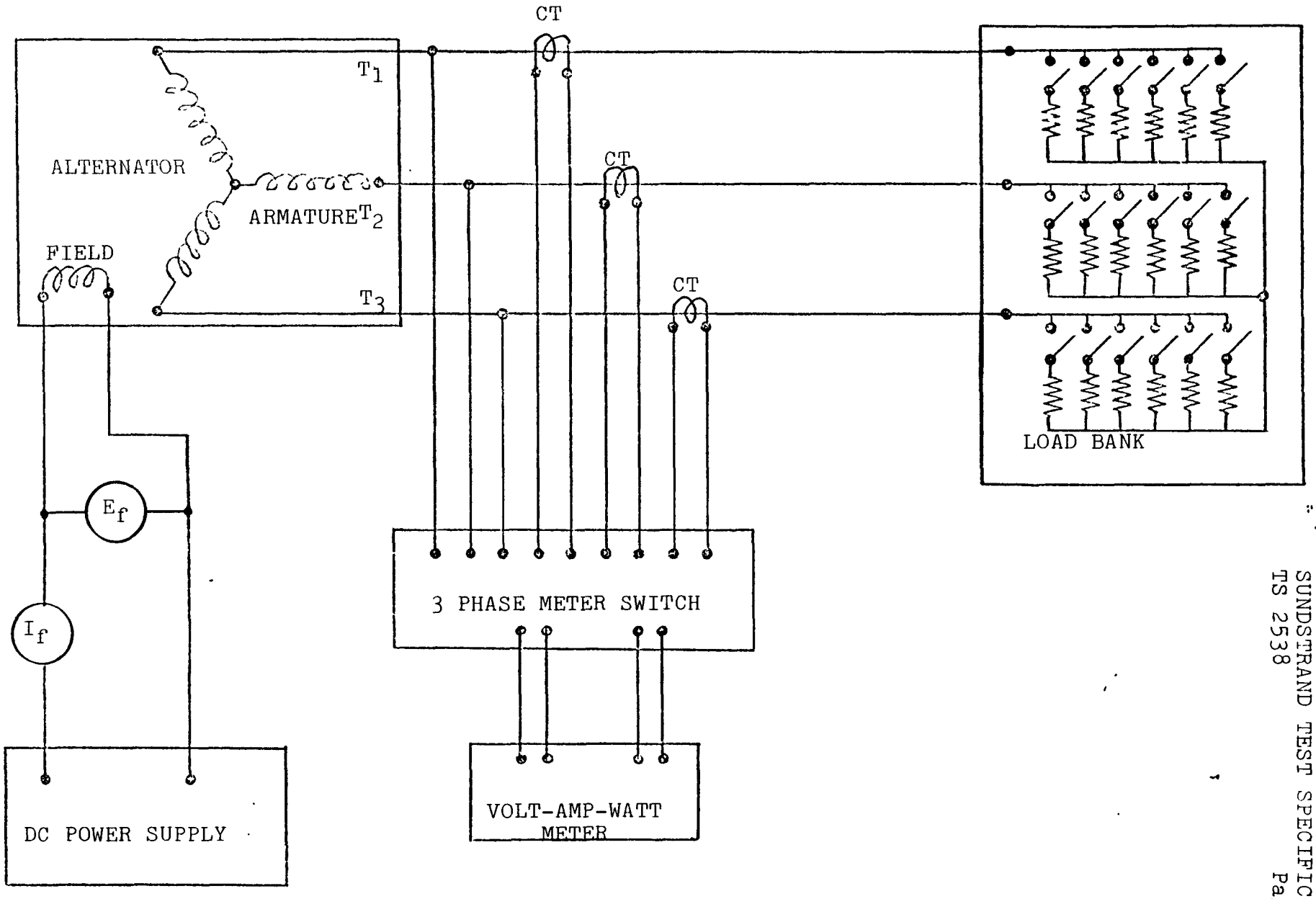

ELECTRICAL SCHEMATIC
FOR SEPARATE EXCITATION

FIGURE 1

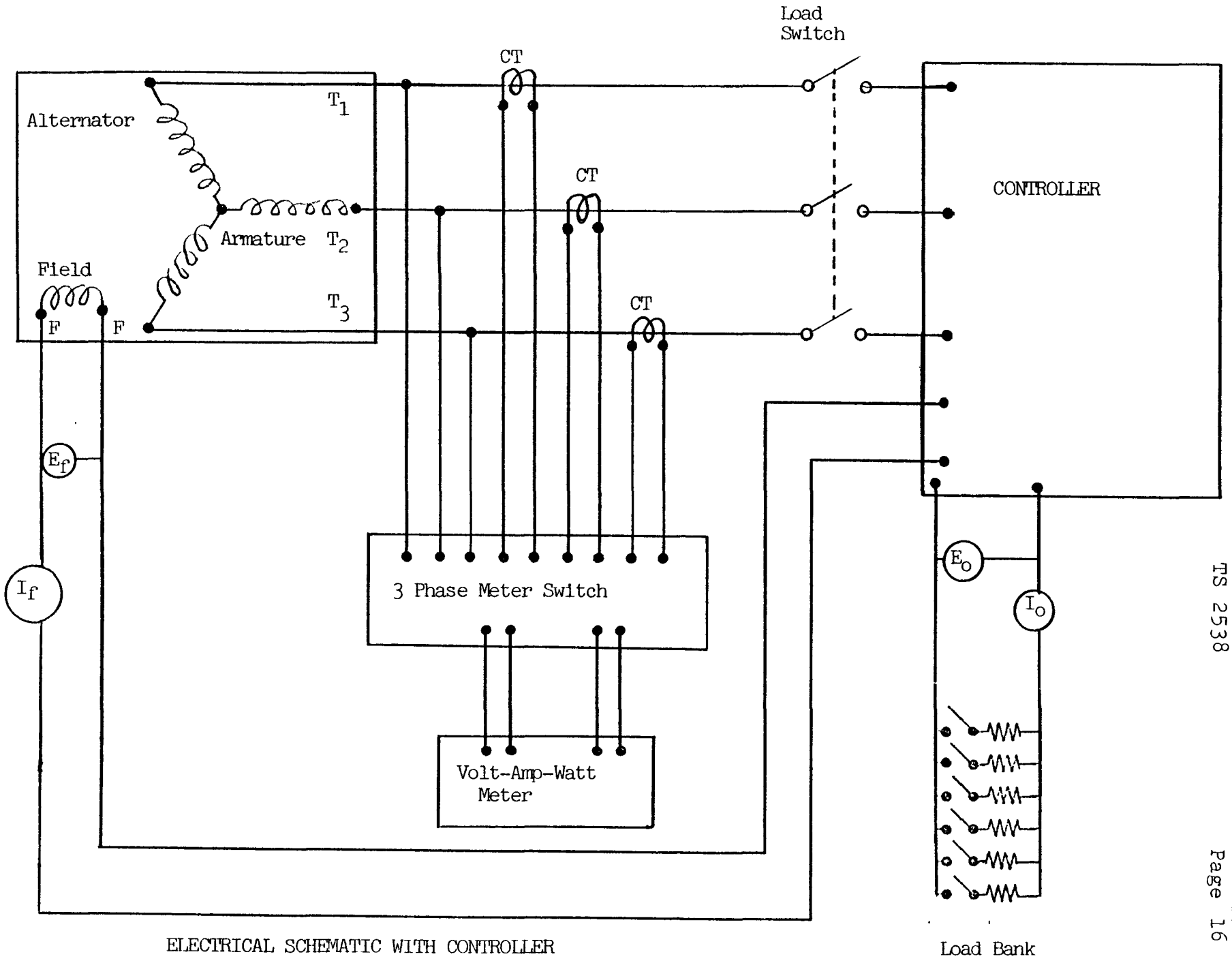

ELECTRICAL SCHEMATIC WITH CONTROLLER

FIGURE 2

Sundstrand Advanced Technology Operations
unit of Sundstrand Corporation

4747 HARRISON AVENUE, ROCKFORD, IL 61101

PAGE NO: 17	SHEET 1 OF 120
TEST SPEC: 2538	REV. A
TRACE FILE NO.	

TEST PROCEDURE TITLE

TEST PROCEDURE AND TEST DATA SHEETS FOR
ACCEPTANCE TEST OF SUNDSTRAND ALTERNATOR
STATOR P/N 719134, MODEL NUMBER ORC1A3A01

MODEL NO:	SERIAL NO:	OPERATOR:	INSPECTOR:	DATE
ORC1A3A01	002	1593, 2467, 4931		

TAPE IDENT.	VERSION
N/A	N/A

REMARKS:

QUALITY ASSURANCE APPROVAL

PROCEDURE PARA. NO.	PARAMETER DESCRIPTION	REQUIREMENT MINIMUM	REQUIREMENT MAXIMUM	UNITS	ACTUAL READING
5.1.1	Open Circuit Saturation				
	0.5 DC Amps				
	Line to Line AC volts between:				
	T_1-T_2	---	---	VAC	15.7
	T_1-T_3	---	---	VAC	15.7
	T_3-T_2	---	---	VAC	15.7
	Field Current	---	---	Amps	0.5
	Field Voltage	---	---	VDC	2.4
	Alternator Speed	33,400	34,000	RPM	33700
	Stator Winding Temperatures				
	TC_1	---	275	°F	195
	TC_2	---	275	°F	199
	TC_3	---	275	°F	196
	TC_4	---	275	°F	197
	Cooling Oil Flow	---	---	GPM	(257) .70
	Cooling Oil Temperature	150	230	°F	200
	Cooling Oil Out Temperature	---	---	°F	196

A

.... NOTE ....
TS, MODEL NUMBER AND SERIAL NUMBER MUST APPEAR ON EVERY PAGE
RETAIN ONE COPY OF THIS DATA SHEET FOR QA FILE

Sundstrand Advanced Technology Operations
unit of Sundstrand Corporation
4747 HARRISON AVENUE, ROCKFORD, IL 61101

TEST RECORD–CONTINUATION

TEST SPEC: 2538 REV. A

MODEL NO. ORV1A3A01 SERIAL NO. 002 DATE 3-28-78 DATA SHEET 2 OF 120

PROCEDURE PARAGRAPH NUMBER	PARAMETER DESCRIPTION	REQUIREMENT MINIMUM	REQUIREMENT MAXIMUM	UNITS	ACTUAL READING	
5.1.1	Open Circuit Saturation					
	1.0 DC Amps					
	Line to Line AC volts between:					
	T_1-T_2	---	---	VAC	28.1	
	T_1-T_3	---	---	VAC	28.0	
	T_3-T_2	---	---	VAC	28.0	
	Field Current	---	---	Amps	1.0	
	Field Voltage	---	---	VDC	4.8	
	Alternator Speed	33,400	34,000	RPM	33700	
	Stator Winding Temperature					
	TC_1	---	275	°F	195	
	TC_2	---	275	°F	199	
	TC_3	---	275	°F	196	
	TC_4	---	275	°F	197	
	Cooling Oil Flow	---	---	GPM	(252) .68	
	Cooling Oil Temperature	150	230	°F	197	
	Cooling Oil Out Temperature	---	---	°F	193	A
	1.5 DC Amps					
	Line to Line AC volts between:					
	T_1-T_2	---	---	VAC	40.1	
	T_1-T_3	---	---	VAC	40.1	
	T_3-T_2	---	---	VAC	40.2	
	Field Current	---	---	Amps	1.5	
	Field Voltage	---	---	VDC	7.3	
	Alternator Speed	33,400	34,000	RPM	33700	
	Stator Winding Temperature					
	TC_1	---	275	°F	196	
	TC_2	---	275	°F	201	
	TC_3	---	275	°F	197	
	TC_4	---	275	°F	198	
	Cooling Oil Flow	---	---	GPM	(259) .71	
	Cooling Oil Temperature	150	230	°F	212	
	Cooling Oil Out Temperature	---	---	°F	205	A

.... NOTE ....
TS, MODEL NUMBER AND SERIAL NUMBER MUST APPEAR ON EVERY PAGE
RETAIN ONE COPY OF THIS DATA SHEET FOR QA FILE

Sundstrand Advanced Technology Operations
unit of Sundstrand Corporation
4747 HARRISON AVENUE, ROCKFORD, IL 61101

TEST RECORD–CONTINUATION

PAGE NO. 19

TEST SPEC: 2538 REV. A

MODEL NO. ORV1A3A01 SERIAL NO. 002 DATE 3-28-78 DATA SHEET 3 OF 120

PROCEDURE PARAGRAPH NUMBER	PARAMETER DESCRIPTION	REQUIREMENT MINIMUM	REQUIREMENT MAXIMUM	UNITS	ACTUAL READING
5.1.1	Open Circuit Saturation				
	2.0 DC Amps				
	Line to Line AC volts between:				
	T_1-T_2	---	---	VAC	50.6
	T_1-T_3	---	---	VAC	50.7
	T_3-T_2	---	---	VAC	50.7
	Field Current	---	---	Amps	2.0
	Field Voltage	---	---	VDC	9.8
	Alternator Speed	33,400	34,000	RPM	33700
	Stator Winding Temperature				
	TC_1	---	275	°F	198
	TC_2	---	275	°F	203
	TC_3	---	275	°F	200
	TC_4	---	275	°F	200
	Cooling Oil Flow	---	---	GPM	(257) .70
	Cooling Oil Temperature	150	230	°F	202
	Cooling Oil Out Temperature	---	---	°F	198 A
	2.5 DC Amps				
	Line to Line AC volts between:				
	T_1-T_2	---	---	VAC	58.8
	T_1-T_3	---	---	VAC	58.9
	T_3-T_2	---	---	VAC	58.9
	Field Current	---	---	Amps	2.0
	Field Voltage	---	---	VDC	12.3
	Alternator Speed	33,400	34,000	RPM	33700
	Stator Winding Temperature				
	TC_1	---	275	°F	201
	TC_2	---	275	°F	206
	TC_3	---	275	°F	203
	TC_4	---	275	°F	202
	Cooling Oil Flow	---	---	GPM	(255) .69
	Cooling Oil Temperature	150	230	°F	199
	Cooling Oil Out Temperature	---	---	°F	195 A

.... NOTE ...
TS, MODEL NUMBER AND SERIAL NUMBER MUST APPEAR ON EVERY PAGE
RETAIN ONE COPY OF THIS DATA SHEET FOR QA FILE

Sundstrand Advanced Technology Operations
unit of Sundstrand Corporation
4747 HARRISON AVENUE, ROCKFORD, IL 61101

TEST RECORD–CONTINUATION

PAGE NO. 20

TEST SPEC: 2538 REV. A

MODEL NO. ORV1A3A01 SERIAL NO. 002 DATE 3-28-78 DATA SHEET 4 OF 120

PROCEDURE PARAGRAPH NUMBER	PARAMETER DESCRIPTION	REQUIREMENT MINIMUM	REQUIREMENT MAXIMUM	UNITS	ACTUAL READING	
5.1.1	Open Circuit Saturation					
	3.0 DC Amps					
	Line to Line AC volts between:					
	T_1-T_2	---	---	VAC	63.2	
	T_1-T_3	---	---	VAC	63.4	
	T_3-T_2	---	---	VAC	63.6	
	Field Current	---	---	Amps	3.0	
	Field Voltage	---	---	VDC	14.8	
	Alternator Speed	33,400	34,000	RPM	33700	
	Stator Winding Temperature					
	TC_1	---	275	°F	204	
	TC_2	---	275	°F	209	
	TC_3	---	275	°F	205	
	TC_4	---	275	°F	205	
	Cooling Oil Flow	---	---	GPM	(252) .68	
	Cooling Oil Temperature	150	230	°F	195	
	Cooling Oil Out Temperature	---	---	°F	193	A
	3.5 DC Amps					
	Line to Line AC volts between:					
	T_1-T_2	---	---	VAC	66.0	
	T_1-T_3	---	---	VAC	66.0	
	T_3-T_2	---	---	VAC	66.1	
	Field Current	---	---	Amps	3.5	
	Field Voltage	---	---	VDC	17.4	
	Alternator Speed	33,400	34,000	RPM	33700	
	Stator Winding Temperature					
	TC_1	---	275	°F	210	
	TC_2	---	275	°F	216	
	TC_3	---	275	°F	212	
	TC_4	---	275	°F	212	
	Cooling Oil Flow	---	---	GPM	(264) .72	
	Cooling Oil Temperature	150	230	°F	201	
	Cooling Oil Out Temperature	---	---	°F	198	A

.... NOTE ....
TS, MODEL NUMBER AND SERIAL NUMBER MUST APPEAR ON EVERY PAGE
RETAIN ONE COPY OF THIS DATA SHEET FOR QA FILE

Sundstrand Advanced Technology Operations
unit of Sundstrand Corporation
4747 HARRISON AVENUE, ROCKFORD, IL 61101

TEST RECORD–CONTINUATION

PAGE NO. 21

TEST SPEC: 2538 REV. A

MODEL NO. ORV1A3A01 SERIAL NO. 002 DATE 3-28-78 DATA SHEET 5 OF 120

PROCEDURE PARAGRAPH NUMBER	PARAMETER DESCRIPTION	REQUIREMENT MINIMUM	REQUIREMENT MAXIMUM	UNITS	ACTUAL READING
5.1.1	Open Circuit Saturation				
	4.0 DC Amps				
	Line to Line AC volts between:				
	T_1-T_2	---	---	VAC	68.9
	T_1-T_3	---	---	VAC	68.9
	T_3-T_2	---	---	VAC	69.0
	Field Current	---	---	Amps	4.0
	Field Voltage	---	---	VDC	20.2
	Alternator Speed	33,400	34,000	RPM	33200
	Stator Winding Temperature				
	TC_1	---	275	°F	213
	TC_2	---	275	°F	219
	TC_3	---	275	°F	215
	TC_4	---	275	°F	214
	Cooling Oil Flow	---	---	GPM	(255) .69
	Cooling Oil Temperature	150	230	°F	198
	Cooling Oil Out Temperature	---	---	°F	196 A
	4.5 DC Amps				
	Line to Line AC volts between:				
	T_1-T_2	---	---	VAC	71.3
	T_1-T_3	---	---	VAC	71.4
	T_3-T_2	---	---	VAC	71.6
	Field Current	---	---	Amps	4.5
	Field Voltage	---	---	VDC	22.8
	Alternator Speed	33,400	34,000	RPM	33700
	Stator Winding Temperature				
	TC_1	---	275	°F	216
	TC_2	---	275	°F	222
	TC_3	---	275	°F	217
	TC_4	---	275	°F	217
	Cooling Oil Flow	---	---	GPM	(252) .68
	Cooling Oil Temperature	150	230	°F	199
	Cooling Oil Out Temperature	---	---	°F	197 A

.... NOTE ....
TS, MODEL NUMBER AND SERIAL NUMBER MUST APPEAR ON EVERY PAGE
RETAIN ONE COPY OF THIS DATA SHEET FOR QA FILE

Sundstrand Advanced Technology Operations
unit of Sundstrand Corporation
4747 HARRISON AVENUE, ROCKFORD, IL 61101

TEST RECORD—CONTINUATION

PAGE NO. 22

TEST SPEC: 2538 REV. A

MODEL NO. ORC1A3A01 SERIAL NO. 002 DATE 3-28-78 DATA SHEET 6 OF 120

PROCEDURE PARAGRAPH NUMBER	PARAMETER DESCRIPTION	REQUIREMENT MINIMUM	REQUIREMENT MAXIMUM	UNITS	ACTUAL READING
5.1.1	Open Circuit Saturation				
	5.0 DC Amps				
	Line to Line AC volts between:				
	T_1-T_2	---	---	VAC	73.4
	T_1-T_3	---	---	VAC	73.5
	T_3-T_2	---	---	VAC	73.8
	Field Current	---	---	Amps	5.0
	Field Voltage	---	---	VDC	26.0
	Alternator Speed	33,400	34,000	RPM	33700
	Stator Winding Temperatures				
	TC_1	---	275	°F	218
	TC_2	---	275	°F	225
	TC_3	---	275	°F	220
	TC_4	---	275	°F	219
	Cooling Oil Flow	---	---	GPM	(268) .73
	Cooling Oil Temperature	150	230	°F	217
	Cooling Oil Out Temperature	---	---	°F	211 A
	Residual Voltage:				
	T_1-T_2	---	---	VAC	5.65
	T_1-T_3	---	---	VAC	5.65
	T_3-T_2	---	---	VAC	5.66
5.1.2	Phase Balance				
	Terminal Voltages - Total (From paragraph 5.1.1)				
	T_1-T_2	22.3	22.7	VAC	22.5
	T_1-T_3	22.3	22.7	VAC	22.5
	T_3-T_2	22.3	22.7	VAC	22.5

.... NOTE ....
TS, MODEL NUMBER AND SERIAL NUMBER MUST APPEAR ON EVERY PAGE
RETAIN ONE COPY OF THIS DATA SHEET FOR QA FILE

TEST RECORD – CONTINUATION

Sundstrand Aviation
division of Sundstrand Corporation

PAGE NO. 23

TEST SPEC: 2538 REV. A

MODEL NO. ORC1A3A01 SERIAL NO. 002 DATE 3-28-78 DATA SHEET 7 OF 120

PROCEDURE PARAGRAPH NUMBER	PARAMETER DESCRIPTION	REQUIREMENT MINIMUM	REQUIREMENT MAXIMUM	UNITS	ACTUAL READING
5.1.3	Short Circuit Test				
	Short Circuit Current				
	I_1	120	---	Amps	129.2
	I_2	120	---	Amps	129.2
	I_3	120	---	Amps	129.4
	Field Current	---	---	Amps	5.0
	Field Voltage	---	---	VDC	26.3
	Alternator Speed	33,400	34,000	RPM	33700
	Winding Temperatures				
	TC_1	---	275	°F	229
	TC_2	---	275	°F	229
	TC_3	---	275	°F	228
	TC_4	---	275	°F	229
	Residual Current -				
	I_1	---	---	Amps	6.2
	I_2	---	---	Amps	6.2
	I_3	---	---	Amps	6.2

.... NOTE ....
TS, MODEL NUMBER AND SERIAL NUMBER MUST APPEAR ON EVERY PAGE
RETAIN ONE COPY OF THIS DATA SHEET FOR QA FILE

Sundstrand Advanced Technology Operations
unit of Sundstrand Corporation
4747 HARRISON AVENUE, ROCKFORD, IL 61101

TEST RECORD–CONTINUATION

PAGE NO. 24

TEST SPEC: 2538 REV. A

MODEL NO. ORC1A3A01 SERIAL NO. 002 DATE 3-22-78 DATA SHEET 8 OF 120

TEST MAN: 4931

PROCEDURE PARAGRAPH NUMBER	PARAMETER DESCRIPTION	REQUIREMENT MINIMUM	REQUIREMENT MAXIMUM	UNITS	ACTUAL READING	
5.1.4.1	Load and Efficiency-Separately Excited-					
#1	TEST "A" (No Load)					
	1) Residual Voltage					
	T_1-T_2	---	---	VAC	5.2	
	T_1-T_3	---	---	VAC	5.2	
	T_3-T_2	---	---	VAC	5.2	
	2) Alternator Speed	33,400	34,000	RPM	33200	
	3) Torque	---	---	IN-LBS.	150	
	4) Housing Pressure	21	---	In.Hg.	22.8	
	5) Winding Temperatures					
	TC_1	180	275	°F	189	A
	TC_2	180	275	°F	192	A
	TC_3	180	275	°F	189	A
	TC_4	180	275	°F	190	A
	6) Cooling Oil Flow	---	---	GPM	(248) .68	
	7) Cooling Oil Temperature	150	230	°F	215	
	8) Cooling Oil Out Temperature	---	---	°F	205	A

.... NOTE ....
TS, MODEL NUMBER AND SERIAL NUMBER MUST APPEAR ON EVERY PAGE
RETAIN ONE COPY OF THIS DATA SHEET FOR QA FILE

Form G7478(2)A

Sundstrand Advanced Technology Operations
unit of Sundstrand Corporation
4747 HARRISON AVENUE, ROCKFORD, IL 61101

TEST RECORD–CONTINUATION

PAGE NO. 25

TEST SPEC: 2538 REV. A

MODEL NO. ORC1A3A01 SERIAL NO. 002 DATE 3-22-78 DATA SHEET 9 OF 120

PROCEDURE PARAGRAPH NUMBER	PARAMETER DESCRIPTION	REQUIREMENT MINIMUM	REQUIREMENT MAXIMUM	UNITS	ACTUAL READING	
5.1.4.1	Load and Efficiency-Separately Excited-					
#1	TEST "B" (1500 Watts)					
	1) Three Phase Voltage					
	T_1-T_2	21.5	23.5	VAC	~~5.1~~ 22.1	
	T_1-T_3	21.5	23.5	VAC	~~5~~ 22.2	
	T_3-T_2	21.5	23.5	VAC	22.2	
	2) Three Phase Amps (AC)					
	Phase 1	35.6	41.5	Amps	39.7	
	Phase 2	35.6	41.5	Amps	39.8	
	Phase 3	35.6	41.5	Amps	39.9	
	3) Three Phase Watts (AC)					
	W_1	---	---	Watts	824	
	W_3	---	---	Watts	678	
	$W_1 + W_3$	1450	1550	Watts	1502	
	4) Field Voltage	---	---	VDC	7.9	
	5) Field Current	---	1.90	Amps	1.64	
	6) Alternator Speed	33,400	34,000	RPM	33700	
	7) Torque	---	---	IN.LBS.	4.59	
	8) Housing Pressure	21	---	In.Hg.	22.8	
	9) Winding Temperatures					
	TC_1	180	275	°F	197	A
	TC_2	180	275	°F	198	A
	TC_3	180	275	°F	196	A
	TC_4	180	275	°F	197	A
	10) Cooling Oil Flow	---	---	GPM	(252) .68	
	11) Cooling Oil Temperature	150	230	°F	215	
	12) Cooling Oil Out Temperature	---	---	°F	206	A

.... NOTE ....
TS, MODEL NUMBER AND SERIAL NUMBER MUST APPEAR ON EVERY PAGE
RETAIN ONE COPY OF THIS DATA SHEET FOR QA FILE

Sundstrand Advanced Technology Operations
unit of Sundstrand Corporation
4747 HARRISON AVENUE, ROCKFORD, IL 61101

TEST RECORD–CONTINUATION

PAGE NO. 26

TEST SPEC: 2538 REV. A

MODEL NO. ORC1A3A01 SERIAL NO. 0127 DATE 3-22-78 DATA SHEET 10 OF 120

PROCEDURE PARAGRAPH NUMBER	PARAMETER DESCRIPTION	REQUIREMENT MINIMUM	REQUIREMENT MAXIMUM	UNITS	ACTUAL READING	
5.1.4.1	Load and Efficiency-Separately Excited-					
#2	TEST "A" (No Load)					
	1) Residual Voltage					
	T_1-T_2	---	---	VAC	5.1	
	T_1-T_3	---	---	VAC	5.1	
	T_3-T_2	---	---	VAC	5.1	
	2) Alternator Speed	33,400	34,000	RPM	33700	
	3) Torque	---	---	IN-LBS.	.55	
	4) Housing Pressure	21	---	In.Hg.	22.1	
	5) Winding Temperatures					
	TC_1	180	275	°F	196	A
	TC_2	180	275	°F	199	A
	TC_3	180	275	°F	197	A
	TC_4	180	275	°F	197	A
	6) Cooling Oil Flow	---	---	GPM	(2SV) .68	
	7) Cooling Oil Temperature	150	230	°F	188	
	8) Cooling Oil Out Temperature	---	---	°F	194	A

.... NOTE ....
TS, MODEL NUMBER AND SERIAL NUMBER MUST APPEAR ON EVERY PAGE
RETAIN ONE COPY OF THIS DATA SHEET FOR QA FILE

Sundstrand Advanced Technology Operations
unit of Sundstrand Corporation
4747 HARRISON AVENUE, ROCKFORD, IL 61101

TEST RECORD–CONTINUATION

PAGE NO. 27

TEST SPEC: 2538 REV. A

MODEL NO. ORC1A3A01 SERIAL NO. 002 DATE 3-22-78 DATA SHEET 11 OF 120

PROCEDURE PARAGRAPH NUMBER	PARAMETER DESCRIPTION	REQUIREMENT MINIMUM	REQUIREMENT MAXIMUM	UNITS	ACTUAL READING	
5.1.4.1	Load and Efficiency-Separately Excited-					
#2	TEST "B" (1500 Watts)					
	1) Three Phase Voltage					
	T_1-T_2	21.5	23.5	VAC	22.1	
	T_1-T_3	21.5	23.5	VAC	22.2	
	T_3-T_2	21.5	23.5	VAC	22.2	
	2) Three Phase Amps (AC)					
	Phase 1	35.6	41.5	Amps	39.6	
	Phase 2	35.6	41.5	Amps	39.7	
	Phase 3	35.6	41.5	Amps	39.7	
	3) Three Phase Watts (AC) W_1	---	---	Watts	816	
	W_3	---	---	Watts	671	
	$W_1 + W_3$	1450	1550	Watts	1487	
	4) Field Voltage	---	---	VDC	8.0	
	5) Field Current	---	1.90	Amps	1.65	
	6) Alternator Speed	33,400	34,000	RPM	33700	
	7) Torque	---	---	IN.LBS.	4.61	
	8) Housing Pressure	21	---	In.Hg.	22.8	
	9) Winding Temperatures					
	TC_1	180	275	°F	201	A
	TC_2	180	275	°F	204	A
	TC_3	180	275	°F	202	A
	TC_4	180	275	°F	202	A
	10) Cooling Oil Flow	---	---	GPM	(250) .68	
	11) Cooling Oil Temperature	150	230	°F	198	
	12) Cooling Oil Out Temperature	---	---	°F	194	A

.... NOTE ....
TS, MODEL NUMBER AND SERIAL NUMBER MUST APPEAR ON EVERY PAGE
RETAIN ONE COPY OF THIS DATA SHEET FOR QA FILE

Sundstrand
Advanced Technology
Operations
unit of Sundstrand Corporation
4747 HARRISON AVENUE, ROCKFORD, IL 61101

TEST RECORD—CONTINUATION

TEST SPEC: 2538 REV. A

MODEL NO. ORC1A3A01 SERIAL NO. 002 DATE 3-22-78 DATA SHEET 12 OF 120

PROCEDURE PARAGRAPH NUMBER	PARAMETER DESCRIPTION	REQUIREMENT MINIMUM	REQUIREMENT MAXIMUM	UNITS	ACTUAL READING	
5.1.4.1	Load and Efficiency-Separately Excited-					
#3	TEST "A" (No Load)					
	1) Residual Voltage					
	T_1-T_2	---	---	VAC	5.0	
	T_1-T_3	---	---	VAC	5.0	
	T_3-T_2	---	---	VAC	5.0	
	2) Alternator Speed	33,400	34,000	RPM	33700	
	3) Torque	---		IN-LBS.	.62	
	4) Housing Pressure	21	---	In.Hg.	22.8	
	5) Winding Temperatures					
	TC_1	180	275	°F	200	A
	TC_2	180	275	°F	203	A
	TC_3	180	275	°F	200	A
	TC_4	180	275	°F	201	A
	6) Cooling Oil Flow	---	---	GPM	(152) .68	
	7) Cooling Oil Temperature	150	230	°F	210	
	8) Cooling Oil Out Temperature	---	---	°F	202	A

.... NOTE ....
TS, MODEL NUMBER AND SERIAL NUMBER MUST APPEAR ON EVERY PAGE
RETAIN ONE COPY OF THIS DATA SHEET FOR QA FILE

Sundstrand
Advanced Technology
Operations
unit of Sundstrand Corporation
4747 HARRISON AVENUE, ROCKFORD, IL 61101

TEST RECORD–CONTINUATION

TEST SPEC: 2538 REV. A

MODEL NO. ORC1A3A01 SERIAL NO. 002 DATE 3-22-78 DATA SHEET 13 OF 120

PROCEDURE PARAGRAPH NUMBER	PARAMETER DESCRIPTION	REQUIREMENT MINIMUM	REQUIREMENT MAXIMUM	UNITS	ACTUAL READING	
5.1.4.1	Load and Efficiency-Separately Excited-					
#3	TEST "B" (1500 Watts)					
	1) Three Phase Voltage					
	T_1-T_2	21.5	23.5	VAC	22.0	
	T_1-T_3	21.5	23.5	VAC	22.0	
	T_3-T_2	21.5	23.5	VAC	21.9	
	2) Three Phase Amps (AC)					
	Phase 1	35.6	41.5	Amps	39.9	
	Phase 2	35.6	41.5	Amps	40.0	
	Phase 3	35.6	41.5	Amps	40.0	
	3) Three Phase Watts (AC) W_1	---	---	Watts	826	
	W_3	---	---	Watts	681	
	$W_1 + W_3$	1450	1550	Watts	1507	
	4) Field Voltage	---	---	VDC	8.0	
	5) Field Current	---	1.90	Amps	1.64	
	6) Alternator Speed	33,400	34,000	RPM	33700	
	7) Torque	---	---	IN.LBS.	4.67	
	8) Housing Pressure	21	---	In.Hg.	22.8	
	9) Winding Temperatures					
	TC_1	180	275	°F	206	A
	TC_2	180	275	°F	209	A
	TC_3	180	275	°F	207	A
	TC_4	180	275	°F	207	A
	10) Cooling Oil Flow	---	---	GPM	(250) .68	
	11) Cooling Oil Temperature	150	230	°F	199	
	12) Cooling Oil Out Temperature	---	---	°F	196	A

.... NOTE ....
TS, MODEL NUMBER AND SERIAL NUMBER MUST APPEAR ON EVERY PAGE
RETAIN ONE COPY OF THIS DATA SHEET FOR QA FILE

MODEL NO. ORC1A3A01 SERIAL NO. 002 DATE 3-22-78 DATA SHEET 14 OF 120

PROCEDURE PARAGRAPH NUMBER	PARAMETER DESCRIPTION	REQUIREMENT MINIMUM	REQUIREMENT MAXIMUM	UNITS	ACTUAL READING	
5.1.4.1	Load and Efficiency-Separately Excited-					
#4	TEST "A" (No Load)					
	1) Residual Voltage					
	T_1-T_2	---	---	VAC	5.1	
	T_1-T_3	---	---	VAC	5.1	
	T_3-T_2	---	---	VAC	5.1	
	2) Alternator Speed	33,400	34,000	RPM	33700	
	3) Torque	---	---	IN-LBS.	.51	
	4) Housing Pressure	21	---	In.Hg.	22.8	
	5) Winding Temperatures					
	TC_1	180	275	°F	204	A
	TC_2	180	275	°F	206	A
	TC_3	180	275	°F	209	A
	TC_4	180	275	°F	205	A
	6) Cooling Oil Flow	---	---	GPM	(250) .68	
	7) Cooling Oil Temperature	150	230	°F	196	
	8) Cooling Oil Out Temperature	---	---	°F	193	A

.... NOTE ....
TS, MODEL NUMBER AND SERIAL NUMBER MUST APPEAR ON EVERY PAGE
RETAIN ONE COPY OF THIS DATA SHEET FOR QA FILE

Sundstrand Advanced Technology Operations
unit of Sundstrand Corporation
4747 HARRISON AVENUE, ROCKFORD, IL 61101

TEST RECORD–CONTINUATION

PAGE NO. 31

TEST SPEC: 2538 REV. A

MODEL NO. ORC1A3A01 SERIAL NO. 002 DATE 3-22-78 DATA SHEET 15 OF 120

PROCEDURE PARAGRAPH NUMBER	PARAMETER DESCRIPTION	REQUIREMENT MINIMUM	REQUIREMENT MAXIMUM	UNITS	ACTUAL READING
5.1.4.1	Load and Efficiency-Separately Excited-				
#4	TEST "B" (1500 Watts)				
	1) Three Phase Voltage				
	T_1-T_2	21.5	23.5	VAC	21.8
	T_1-T_3	21.5	23.5	VAC	21.9
	T_3-T_2	21.5	23.5	VAC	21.8
	2) Three Phase Amps (AC)				
	Phase 1	35.6	41.5	Amps	38.9
	Phase 2	35.6	41.5	Amps	38.9
	Phase 3	35.6	41.5	Amps	38.8
	3) Three Phase Watts (AC) W_1	---	---	Watts	803
	W_3	---	---	Watts	661
	$W_1 + W_3$	1450	1550	Watts	1464
	4) Field Voltage	---	---	VDC	8.0
	5) Field Current	---	1.90	Amps	1.64
	6) Alternator Speed	33,400	34,000	RPM	33700
	7) Torque	---	---	IN.LBS.	4.52
	8) Housing Pressure	21	---	In.Hg.	22.8
	9) Winding Temperatures				
	TC_1	180	275	°F	205 A
	TC_2	180	275	°F	208 A
	TC_3	180	275	°F	206 A
	TC_4	180	275	°F	206 A
	10) Cooling Oil Flow	---	---	GPM	(262) .71
	11) Cooling Oil Temperature	150	230	°F	202
	12) Cooling Oil Out Temperature	---	---	°F	188 A

.... NOTE ....
TS, MODEL NUMBER AND SERIAL NUMBER MUST APPEAR ON EVERY PAGE
RETAIN ONE COPY OF THIS DATA SHEET FOR QA FILE

Sundstrand
Advanced Technology
Operations
unit of Sundstrand Corporation
4747 HARRISON AVENUE, ROCKFORD, IL 61101

TEST RECORD–CONTINUATION

TEST SPEC: 2538 REV. A

MODEL NO. ORC1A3A01 SERIAL NO. 002 DATE 3-22-78 DATA SHEET 16 OF 120

PROCEDURE PARAGRAPH NUMBER	PARAMETER DESCRIPTION	REQUIREMENT MINIMUM	REQUIREMENT MAXIMUM	UNITS	ACTUAL READING	
5.1.4.1	Load and Efficiency-Separately Excited-					
#5	TEST "A" (No Load)					
	1) Residual Voltage					
	T_1-T_2	---	---	VAC	4.9	
	T_1-T_3	---	---	VAC	4.9	
	T_3-T_2	---	---	VAC	4.9	
	2) Alternator Speed	33,400	34,000	RPM	33700	
	3) Torque	---	---	IN-LBS.	.51	
	4) Housing Pressure	21	---	In.Hg.	22.8	
	5) Winding Temperatures					
	TC_1	180	275	°F	202	A
	TC_2	180	275	°F	204	A
	TC_3	180	275	°F	202	A
	TC_4	180	275	°F	203	A
	6) Cooling Oil Flow	---	---	GPM	(251) .68	
	7) Cooling Oil Temperature	150	230	°F	195	
	8) Cooling Oil Out Temperature	---	---	°F	192	A

.... NOTE ....
TS, MODEL NUMBER AND SERIAL NUMBER MUST APPEAR ON EVERY PAGE
RETAIN ONE COPY OF THIS DATA SHEET FOR QA FILE

Sundstrand
Advanced Technology
Operations
unit of Sundstrand Corporation
4747 HARRISON AVENUE, ROCKFORD, IL 61101

TEST RECORD—CONTINUATION

TEST SPEC: 2538 REV. A

MODEL NO. ORC1A3A01 SERIAL NO. 002 DATE 3-22-78 DATA SHEET 17 OF 120

PROCEDURE PARAGRAPH NUMBER	PARAMETER DESCRIPTION	REQUIREMENT MINIMUM	REQUIREMENT MAXIMUM	UNITS	ACTUAL READING
5.1.4.1	Load and Efficiency-Separately Excited-				
#5	TEST "B" (1500 Watts)				
	1) Three Phase Voltage				
	T_1-T_2	21.5	23.5	VAC	22.0
	T_1-T_3	21.5	23.5	VAC	22.0
	T_3-T_2	21.5	23.5	VAC	22.0
	2) Three Phase Amps (AC)				
	Phase 1	35.6	41.5	Amps	39.4
	Phase 2	35.6	41.5	Amps	39.6
	Phase 3	35.6	41.5	Amps	39.8
	3) Three Phase Watts (AC) W_1	---	---	Watts	819
	W_3	---	---	Watts	677
	$W_1 + W_3$	1450	1550	Watts	1496
	4) Field Voltage	---	---	VDC	8.3
	5) Field Current	---	1.90	Amps	1.70
	6) Alternator Speed	33,400	34,000	RPM	33700
	7) Torque	---	---	IN.LBS.	4.60
	8) Housing Pressure	21	---	In.Hg.	22.8
	9) Winding Temperatures				
	TC_1	180	275	°F	205 A
	TC_2	180	275	°F	208 A
	TC_3	180	275	°F	206 A
	TC_4	180	275	°F	206 A
	10) Cooling Oil Flow	---	---	GPM	(265) .72
	11) Cooling Oil Temperature	150	230	°F	199
	12) Cooling Oil Out Temperature	---	---	°F	194 A

.... NOTE ....
TS, MODEL NUMBER AND SERIAL NUMBER MUST APPEAR ON EVERY PAGE
RETAIN ONE COPY OF THIS DATA SHEET FOR QA FILE

Sundstrand
Advanced Technology
Operations
unit of Sundstrand Corporation
4747 HARRISON AVENUE, ROCKFORD, IL 61101

TEST RECORD–CONTINUATION

TEST SPEC: 2538 REV. A

MODEL NO. ORC1A3A01 SERIAL NO. 002 DATE 3-22-78 DATA SHEET 18 OF 120

PROCEDURE PARAGRAPH NUMBER	PARAMETER DESCRIPTION	REQUIREMENT MINIMUM	REQUIREMENT MAXIMUM	UNITS	ACTUAL READING	
5.1.4.1	Load and Efficiency-Separately Excited-					
#6	TEST "A" (No Load)					
	1) Residual Voltage					
	T_1-T_2	---	---	VAC	5.0	
	T_1-T_3	---	---	VAC	5.0	
	T_3-T_2	---	---	VAC	5.0	
	2) Alternator Speed	33,400	34,000	RPM	33700	
	3) Torque	---	---	IN-LBS.	.49	
	4) Housing Pressure	21	---	In.Hg.	22.8	
	5) Winding Temperatures					
	TC_1	180	275	°F	203	A
	TC_2	180	275	°F	205	A
	TC_3	180	275	°F	203	A
	TC_4	180	275	°F	204	A
	6) Cooling Oil Flow	---	---	GPM	(262) .71	
	7) Cooling Oil Temperature	150	230	°F	202	
	8) Cooling Oil Out Temperature	---	---	°F	198	A

.... NOTE ....
TS, MODEL NUMBER AND SERIAL NUMBER MUST APPEAR ON EVERY PAGE
RETAIN ONE COPY OF THIS DATA SHEET FOR QA FILE

Sundstrand
Advanced Technology
Operations
unit of Sundstrand Corporation
4747 HARRISON AVENUE, ROCKFORD, IL 61101

TEST RECORD–CONTINUATION

TEST SPEC: 2538 REV. A

MODEL NO. ORC1A3A01 SERIAL NO. 002 DATE 3-22-78 DATA SHEET 19 OF 120

PROCEDURE PARAGRAPH NUMBER	PARAMETER DESCRIPTION	REQUIREMENT MINIMUM	REQUIREMENT MAXIMUM	UNITS	ACTUAL READING	
5.1.4.1	Load and Efficiency-Separately Excited-					
#6	TEST "B" (1500 Watts)					
	1) Three Phase Voltage					
	T_1-T_2	21.5	23.5	VAC	22.1	
	T_1-T_3	21.5	23.5	VAC	22.2	
	T_3-T_2	21.5	23.5	VAC	22.2	
	2) Three Phase Amps (AC)					
	Phase 1	35.6	41.5	Amps	40.0	
	Phase 2	35.6	41.5	Amps	40.2	
	Phase 3	35.6	41.5	Amps	40.1	
	3) Three Phase Watts (AC) W_1	---	---	Watts	823	
	W_3	---	---	Watts	680	
	W_1 +W_3	1450	1550	Watts	1503	
	4) Field Voltage	---	---	VDC	8.3	
	5) Field Current	---	1.90	Amps	1.70	
	6) Alternator Speed	33,400	34,000	RPM	33700	
	7) Torque	---	---	IN.LBS.	4.62	
	8) Housing Pressure	21	---	In.Hg.	22.8	
	9) Winding Temperatures					
	TC_1	180	275	°F	204	A
	TC_2	180	275	°F	207	A
	TC_3	180	275	°F	205	A
	TC_4	180	275	°F	205	A
	10) Cooling Oil Flow	---	---	GPM	(248) .68	
	11) Cooling Oil Temperature	150	230	°F	210	
	12) Cooling Oil Out Temperature	---	---	°F	202	A

.... NOTE ....
TS, MODEL NUMBER AND SERIAL NUMBER MUST APPEAR ON EVERY PAGE
RETAIN ONE COPY OF THIS DATA SHEET FOR QA FILE

Sundstrand
Advanced Technology
Operations
unit of Sundstrand Corporation
4747 HARRISON AVENUE, ROCKFORD, IL 61101

TEST RECORD–CONTINUATION

TEST SPEC: 2538 REV. A

MODEL NO. ORC1A3A01 SERIAL NO. 002 DATE 3-22-78 DATA SHEET 20 OF 120

PROCEDURE PARAGRAPH NUMBER	PARAMETER DESCRIPTION	REQUIREMENT MINIMUM	REQUIREMENT MAXIMUM	UNITS	ACTUAL READING	
5.1.4.1	Load and Efficiency-Separately Excited-					
#7	TEST "A" (No Load)					
	1) Residual Voltage					
	T_1-T_2	---	---	VAC	4.9	
	T_1-T_3	---	---	VAC	4.9	
	T_3-T_2	---	---	VAC	4.9	
	2) Alternator Speed	33,400	34,000	RPM	33700	
	3) Torque	---	---	IN-LBS.	.58	
	4) Housing Pressure	21	---	In.Hg.	22.8	
	5) Winding Temperatures					
	TC_1	180	275	°F	194	A
	TC_2	180	275	°F	197	A
	TC_3	180	275	°F	195	A
	TC_4	130	275	°F	196	A
	6) Cooling Oil Flow	---	---	GPM	(264) .72	
	7) Cooling Oil Temperature	150	230	°F	194	
	8) Cooling Oil Out Temperature	---	---	°F	190	A

.... NOTE ....
TS, MODEL NUMBER AND SERIAL NUMBER MUST APPEAR ON EVERY PAGE
RETAIN ONE COPY OF THIS DATA SHEET FOR QA FILE

Sundstrand
Advanced Technology
Operations
unit of Sundstrand Corporation
4747 HARRISON AVENUE, ROCKFORD, IL 61101

TEST RECORD–CONTINUATION

TEST SPEC: 2538 REV. A

MODEL NO. ORC1A3A01 SERIAL NO. 002 DATE 3-22-78 DATA SHEET 21 OF 120

PROCEDURE PARAGRAPH NUMBER	PARAMETER DESCRIPTION	REQUIREMENT MINIMUM	REQUIREMENT MAXIMUM	UNITS	ACTUAL READING	
5.1.4.1	Load and Efficiency-Separately Excited-					
#7	TEST "B" (1500 Watts)					
	1) Three Phase Voltage					
	T_1-T_2	21.5	23.5	VAC	22.1	
	T_1-T_3	21.5	23.5	VAC	22.2	
	T_3-T_2	21.5	23.5	VAC	22.2	
	2) Three Phase Amps (AC)					
	Phase 1	35.6	41.5	Amps	39.8	
	Phase 2	35.6	41.5	Amps	40.0	
	Phase 3	35.6	41.5	Amps	40.0	
	3) Three Phase Watts (AC) W_1	---	---	Watts	824	
	W_3	---	---	Watts	679	
	$W_1 + W_3$	1450	1550	Watts	1503	
	4) Field Voltage	---	---	VDC	8.2	
	5) Field Current	---	1.90	Amps	1.69	
	6) Alternator Speed	33,400	34,000	RPM	33700	
	7) Torque	---	---	IN.LBS.	4.72	
	8) Housing Pressure	21	---	In.Hg.	22.8	
	9) Winding Temperatures					
	TC_1	180	275	°F	201	A
	TC_2	180	275	°F	204	A
	TC_3	180	275	°F	203	A
	TC_4	180	275	°F	203	A
	10) Cooling Oil Flow	---	---	GPM	(264) .72	
	11) Cooling Oil Temperature	150	230	°F	209	
	12) Cooling Oil Out Temperature	---	---	°F	201	A

.... NOTE ....
TS, MODEL NUMBER AND SERIAL NUMBER MUST APPEAR ON EVERY PAGE
RETAIN ONE COPY OF THIS DATA SHEET FOR QA FILE

Sundstrand Advanced Technology Operations
unit of Sundstrand Corporation
4747 HARRISON AVENUE, ROCKFORD, IL 61101

TEST RECORD–CONTINUATION

PAGE NO. 38

TEST SPEC: 2538 REV. A

MODEL NO. ORC1A3A01 SERIAL NO. 002 DATE 3-21-78 DATA SHEET 22 OF 120

TEST MAN: 2467

PROCEDURE PARAGRAPH NUMBER	PARAMETER DESCRIPTION	REQUIREMENT MINIMUM	REQUIREMENT MAXIMUM	UNITS	ACTUAL READING	
5.1.4.2	Load and Efficiency-Separately Excited-					
#1	TEST "A" (No Load)					
	1) Residual Voltage					
	T_1-T_2	---	---	VAC	5.6	
	T_1-T_3	---	---	VAC	5.6	
	T_3-T_2	---	---	VAC	5.6	
	2) Alternator Speed	33,400	34,000	RPM	33700	
	3) Torque	---	---	IN-LBS.	.56	
	4) Housing Pressure	21	---	In.Hg.	22.8	
	5) Winding Temperatures					
	TC_1	180	275	°F	192	A
	TC_2	180	275	°F	195	A
	TC_3	180	275	°F	193	A
	TC_4	180	275	°F	193	A
	6) Cooling Oil Flow	---	---	GPM	(247) .67	
	7) Cooling Oil Temperature	150	230	°F	214	
	8) Cooling Oil Out Temperature	---	---	°F	206	A

.... NOTE ....
TS, MODEL NUMBER AND SERIAL NUMBER MUST APPEAR ON EVERY PAGE
RETAIN ONE COPY OF THIS DATA SHEET FOR QA FILE

Sundstrand Advanced Technology Operations
unit of Sundstrand Corporation
4747 HARRISON AVENUE, ROCKFORD, IL 61101

TEST RECORD–CONTINUATION

PAGE NO. 39

TEST SPEC: 2538 REV. A

MODEL NO. ORC1A3A01 SERIAL NO. 002 DATE 3-20-78 DATA SHEET 23 OF 120

PROCEDURE PARAGRAPH NUMBER	PARAMETER DESCRIPTION	REQUIREMENT MINIMUM	REQUIREMENT MAXIMUM	UNITS	ACTUAL READING	
5.1.4.2	Load and Efficiency-Separately Excited-					
#1	TEST "B" (500 Watts)					
	1) Three Phase Voltage					
	T_1-T_2	21.5	23.5	VAC	22.2	
	T_1-T_3	21.5	23.5	VAC	22.2	
	T_3-T_2	21.5	23.5	VAC	22.2	
	2) Three Phase Amps (AC)					
	Phase 1	11.3	13.4	Amps	12.2	
	Phase 2	11.3	13.4	Amps	12.2	
	Phase 3	11.3	13.4	Amps	12.2	
	3) Three Phase Watts (AC) W_1	---	---	Watts	243	
	W_3	---	---	Watts	227	
	$W_1 + W_3$	460	500	Watts	470	
	4) Field Voltage	---	---	VDC	4.1	
	5) Field Current	---	1.10	Amps	.89	
	6) Alternator Speed	33,400	34,000	RPM	33700	
	7) Torque	---	---	IN.LBS.	1.88	
	8) Housing Pressure	21	---	In.Hg.	22.8	
	9) Winding Temperatures					
	TC_1	180	275	°F	193	A
	TC_2	180	275	°F	186	A
	TC_3	180	275	°F	194	A
	TC_4	180	275	°F	195	A
	10) Cooling Oil Flow	---	---	GPM	(255) .69	
	11) Cooling Oil Temperature	150	230	°F	215	
	12) Cooling Oil Out Temperature	---	---	°F	205	A

.... NOTE ....
TS, MODEL NUMBER AND SERIAL NUMBER MUST APPEAR ON EVERY PAGE
RETAIN ONE COPY OF THIS DATA SHEET FOR QA FILE

1.15

Form G7478(2)A

Sundstrand Advanced Technology Operations
unit of Sundstrand Corporation
4747 HARRISON AVENUE, ROCKFORD, IL 61101

TEST RECORD–CONTINUATION

PAGE NO. 40

TEST SPEC: 2538 REV. A

MODEL NO. ORC1A3A01 SERIAL NO. 002 DATE 3-21-78 DATA SHEET 24 OF 120

PROCEDURE PARAGRAPH NUMBER	PARAMETER DESCRIPTION	REQUIREMENT MINIMUM	REQUIREMENT MAXIMUM	UNITS	ACTUAL READING	
5.1.4.2	Load and Efficiency-Separately Excited-					
#2	TEST "A" (No Load)					
	1) Residual Voltage					
	T_1-T_2	---	---	VAC	5.7	
	T_1-T_3	---	---	VAC	5.7	
	T_3-T_2	---	---	VAC	5.7	
	2) Alternator Speed	33,400	34,000	RPM	33700	
	3) Torque	---	---	IN-LBS.	.58	
	4) Housing Pressure	21	---	In.Hg.	22.8	
	5) Winding Temperatures					
	TC_1	180	275	°F	193	A
	TC_2	180	275	°F	196	A
	TC_3	180	275	°F	194	A
	TC_4	180	275	°F	195	A
	6) Cooling Oil Flow	---	---	GPM	(258) .71	
	7) Cooling Oil Temperature	150	230	°F	201	
	8) Cooling Oil Out Temperature	---	---	°F	196	A

.... NOTE ....
TS, MODEL NUMBER AND SERIAL NUMBER MUST APPEAR ON EVERY PAGE
RETAIN ONE COPY OF THIS DATA SHEET FOR QA FILE

Sundstrand Advanced Technology Operations
unit of Sundstrand Corporation
4747 HARRISON AVENUE, ROCKFORD, IL 61101

TEST RECORD–CONTINUATION

PAGE NO. 41

TEST SPEC: 2538 REV. A

MODEL NO. ORC1A3A01 SERIAL NO. 002 DATE 3-21-78 DATA SHEET 25 OF 120

PROCEDURE PARAGRAPH NUMBER	PARAMETER DESCRIPTION	REQUIREMENT MINIMUM	REQUIREMENT MAXIMUM	UNITS	ACTUAL READING	
5.1.4.2	Load and Efficiency-Separately Excited-					
#2	TEST "B" (500 Watts)					
	1) Three Phase Voltage					
	T_1-T_2	21.5	23.5	VAC	21.8	
	T_1-T_3	21.5	23.5	VAC	21.6	
	T_3-T_2	21.5	23.5	VAC	21.6	
	2) Three Phase Amps (AC)					
	Phase 1	11.3	13.4	Amps	12.2	
	Phase 2	11.3	13.4	Amps	12.2	
	Phase 3	11.3	13.4	Amps	12.2	
	3) Three Phase Watts (AC) W_1	---	---	Watts	241	
	W_3	---	---	Watts	227	
	$W_1 + W_3$	460	500	Watts	468	
	4) Field Voltage	---	---	VDC	4.2	
	5) Field Current	---	1.10	Amps	.189	
	6) Alternator Speed	33,400	34,000	RPM	33700	
	7) Torque	---	---	IN.LBS.	1.85	
	8) Housing Pressure	21	---	In.Hg.	22.8	
	9) Winding Temperatures					
	TC_1	180	275	°F	195	A
	TC_2	180	275	°F	199	A
	TC_3	180	275	°F	197	A
	TC_4	180	275	°F	198	A
	10) Cooling Oil Flow	---	---	GPM	(251) .68	
	11) Cooling Oil Temperature	150	230	°F	210	
	12) Cooling Oil Out Temperature	---	---	°F	203	A

.... NOTE ....
TS, MODEL NUMBER AND SERIAL NUMBER MUST APPEAR ON EVERY PAGE
RETAIN ONE COPY OF THIS DATA SHEET FOR QA FILE

MODEL NO. ORC1A3A01 SERIAL NO. 002 DATE 3-21-78 DATA SHEET 26 OF 120

PROCEDURE PARAGRAPH NUMBER	PARAMETER DESCRIPTION	REQUIREMENT MINIMUM	REQUIREMENT MAXIMUM	UNITS	ACTUAL READING	
5.1.4.2	Load and Efficiency-Separately Excited-					
#3	TEST "A" (No Load)					
	1) Residual Voltage					
	T_1-T_2	---	---	VAC	5.6	
	T_1-T_3	---	---	VAC	5.6	
	T_3-T_2	---	---	VAC	5.6	
	2) Alternator Speed	33,400	34,000	RPM	33700	
	3) Torque	---	---	IN-LBS.	.59	
	4) Housing Pressure	21	---	In.Hg.	22.8	
	5) Winding Temperatures					
	TC_1	180	275	°F	196	A
	TC_2	180	275	°F	199	A
	TC_3	180	275	°F	196	A
	TC_4	180	275	°F	198	A
	6) Cooling Oil Flow	---	---	GPM	(255) .69	
	7) Cooling Oil Temperature	150	230	°F	200	
	8) Cooling Oil Out Temperature	---	---	°F	195	A

.... NOTE ....
TS, MODEL NUMBER AND SERIAL NUMBER MUST APPEAR ON EVERY PAGE
RETAIN ONE COPY OF THIS DATA SHEET FOR QA FILE

Sundstrand Advanced Technology Operations
unit of Sundstrand Corporation
4747 HARRISON AVENUE, ROCKFORD, IL 61101

TEST RECORD–CONTINUATION

PAGE NO. 43

TEST SPEC: 2538 REV. A

MODEL NO. ORC1A3A01 SERIAL NO. 002 DATE 3-21-78 DATA SHEET 27 OF 120

PROCEDURE PARAGRAPH NUMBER	PARAMETER DESCRIPTION	REQUIREMENT MINIMUM	REQUIREMENT MAXIMUM	UNITS	ACTUAL READING	
5.1.4.2	Load and Efficiency-Separately Excited-					
#3	TEST "B" (500 Watts)					
	1) Three Phase Voltage					
	T_1-T_2	21.5	23.5	VAC	21.8	
	T_1-T_3	21.5	23.5	VAC	21.7	
	T_3-T_2	21.5	23.5	VAC	21.7	
	2) Three Phase Amps (AC)					
	Phase 1	11.3	13.4	Amps	12.0	
	Phase 2	11.3	13.4	Amps	12.1	
	Phase 3	11.3	13.4	Amps	12.1	
	3) Three Phase Watts (AC) W_1	---	---	Watts	238	
	W_3	---	---	Watts	223	
	$W_1 + W_3$	450	500	Watts	461	
	4) Field Voltage	---	---	VDC	4.2	
	5) Field Current	---	1.10	Amps	.89	
	6) Alternator Speed	33,400	34,000	RPM	33700	
	7) Torque	---	---	IN.LBS.	1.85	
	8) Housing Pressure	21	---	In.Hg.	22.8	
	9) Winding Temperatures					
	TC_1	180	275	°F	196	A
	TC_2	180	275	°F	200	A
	TC_3	180	275	°F	198	A
	TC_4	180	275	°F	199	A
	10) Cooling Oil Flow	---	---	GPM	(253) .69	
	11) Cooling Oil Temperature	150	230	°F	200	
	12) Cooling Oil Out Temperature	---	---	°F	196	A

.... NOTE ....
TS, MODEL NUMBER AND SERIAL NUMBER MUST APPEAR ON EVERY PAGE
RETAIN ONE COPY OF THIS DATA SHEET FOR QA FILE

Sundstrand
Advanced Technology
Operations
unit of Sundstrand Corporation
4747 HARRISON AVENUE, ROCKFORD, IL 61101

TEST RECORD–CONTINUATION

TEST SPEC: 2538 REV. A

MODEL NO. ORC1A3A01 SERIAL NO. 002 DATE 3-21-78 DATA SHEET 28 OF 120

PROCEDURE PARAGRAPH NUMBER	PARAMETER DESCRIPTION	REQUIREMENT MINIMUM	REQUIREMENT MAXIMUM	UNITS	ACTUAL READING	
5.1.4.2	Load and Efficiency-Separately Excited-					
#4	TEST "A" (No Load)					
	1) Residual Voltage					
	T_1-T_2	---	---	VAC	5.6	
	T_1-T_3	---	---	VAC	5.6	
	T_3-T_2	---	---	VAC	5.6	
	2) Alternator Speed	33,400	34,000	RPM	33700	
	3) Torque	---	---	IN-LBS.	.61	
	4) Housing Pressure	21	---	In.Hg.	22.8	
	5) Winding Temperatures					
	TC_1	180	275	°F	197	A
	TC_2	180	275	°F	201	A
	TC_3	180	275	°F	198	A
	TC_4	180	275	°F	199	A
	6) Cooling Oil Flow	---	---	GPM	(251) .65	
	7) Cooling Oil Temperature	150	230	°F	197	
	8) Cooling Oil Out Temperature	---	---	°F	193	A

.... NOTE ....
TS, MODEL NUMBER AND SERIAL NUMBER MUST APPEAR ON EVERY PAGE
RETAIN ONE COPY OF THIS DATA SHEET FOR QA FILE

Sundstrand Advanced Technology Operations
unit of Sundstrand Corporation
4747 HARRISON AVENUE, ROCKFORD, IL 61101

TEST RECORD–CONTINUATION

PAGE NO. 45

TEST SPEC: 2538 REV. A

MODEL NO. ORC1A3A01 SERIAL NO. 002 DATE 3-21-78 DATA SHEET 29 OF 120

PROCEDURE PARAGRAPH NUMBER	PARAMETER DESCRIPTION	REQUIREMENT MINIMUM	REQUIREMENT MAXIMUM	UNITS	ACTUAL READING
5.1.4.2	Load and Efficiency-Separately Excited-				
#4	TEST "B" (500 Watts)				
	1) Three Phase Voltage				
	T_1-T_2	21.5	23.5	VAC	21.9
	T_1-T_3	21.5	23.5	VAC	22.0
	T_3-T_2	21.5	23.5	VAC	22.1
	2) Three Phase Amps (AC)				
	Phase 1	11.3	13.4	Amps	11.9
	Phase 2	11.3	13.4	Amps	12.0
	Phase 3	11.3	13.4	Amps	12.1
	3) Three Phase Watts (AC) W_1	---	---	Watts	238
	W_3	---	---	Watts	226
	$W_1 + W_3$	460	500	Watts	464
	4) Field Voltage	---	---	VDC	4.3
	5) Field Current	---	1.10	Amps	.89
	6) Alternator Speed	33,400	34,000	RPM	33700
	7) Torque	---	---	IN.LBS.	1.80
	8) Housing Pressure	21	---	In.Hg.	22.8
	9) Winding Temperatures				
	TC_1	180	275	°F	197 A
	TC_2	180	275	°F	200 A
	TC_3	180	275	°F	198 A
	TC_4	180	275	°F	199 A
	10) Cooling Oil Flow	---	---	GPM	(266) .73
	11) Cooling Oil Temperature	150	230	°F	202
	12) Cooling Oil Out Temperature	---	---	°F	197 A

.... NOTE ....
TS, MODEL NUMBER AND SERIAL NUMBER MUST APPEAR ON EVERY PAGE
RETAIN ONE COPY OF THIS DATA SHEET FOR QA FILE

Sundstrand
Advanced Technology
Operations
unit of Sundstrand Corporation
4747 HARRISON AVENUE, ROCKFORD, IL 61101

TEST RECORD–CONTINUATION

TEST SPEC: 2538 REV. A

MODEL NO. ORC1A3A01 SERIAL NO. 002 DATE 3-21-78 DATA SHEET 30 OF 120

PROCEDURE PARAGRAPH NUMBER	PARAMETER DESCRIPTION	REQUIREMENT MINIMUM	REQUIREMENT MAXIMUM	UNITS	ACTUAL READING	
5.1.4.2	Load and Efficiency-Separately Excited-					
#5	TEST "A" (No Load)					
	1) Residual Voltage					
	T_1-T_2	---	---	VAC	5.6	
	T_1-T_3	---	---	VAC	5.6	
	T_3-T_2	---	---	VAC	5.6	
	2) Alternator Speed	33,400	34,000	RPM	33700	
	3) Torque	---	---	IN-LBS.	.59	
	4) Housing Pressure	21	---	In.Hg.	22.8	
	5) Winding Temperatures					
	TC_1	180	275	°F	196	A
	TC_2	180	275	°F	200	A
	TC_3	180	275	°F	197	A
	TC_4	180	275	°F	199	A
	6) Cooling Oil Flow	---	---	GPM	(252) .68	
	7) Cooling Oil Temperature	150	230	°F	195	
	8) Cooling Oil Out Temperature	---	---	°F	191	A

.... NOTE ....
TS, MODEL NUMBER AND SERIAL NUMBER MUST APPEAR ON EVERY PAGE
RETAIN ONE COPY OF THIS DATA SHEET FOR QA FILE

Sundstrand Advanced Technology Operations
unit of Sundstrand Corporation
4747 HARRISON AVENUE, ROCKFORD, IL 61101

TEST RECORD–CONTINUATION

PAGE NO. 47

TEST SPEC: 2538 REV. A

MODEL NO. ORC1A3A01 SERIAL NO. 002 DATE 3-21-78 DATA SHEET 31 OF 120

PROCEDURE PARAGRAPH NUMBER	PARAMETER DESCRIPTION	REQUIREMENT MINIMUM	REQUIREMENT MAXIMUM	UNITS	ACTUAL READING	
5.1.4.2	Load and Efficiency-Separately Excited-					
#5	TEST "B" (500 Watts)					
	1) Three Phase Voltage					
	T_1-T_2	21.5	23.5	VAC	21.7	
	T_1-T_3	21.5	23.5	VAC	21.6	
	T_3-T_2	21.5	23.5	VAC	21.6	
	2) Three Phase Amps (AC)					
	Phase 1	11.3	13.4	Amps	12.0	
	Phase 2	11.3	13.4	Amps	12.1	
	Phase 3	11.3	13.4	Amps	12.1	
	3) Three Phase Watts (AC) W_1	---	---	Watts	240	
	W_3	---	---	Watts	227	
	$W_1 + W_3$	460	500	Watts	467	
	4) Field Voltage	---	---	VDC	4.3	
	5) Field Current	---	1.10	Amps	.90	
	6) Alternator Speed	33,400	34,000	RPM	33700	
	7) Torque	---	---	IN.LBS.	1.88	
	8) Housing Pressure	21	---	In.Hg.	22.8	
	9) Winding Temperatures					
	TC_1	180	275	°F	198	A
	TC_2	180	275	°F	202	A
	TC_3	180	275	°F	199	A
	TC_4	180	275	°F	200	A
	10) Cooling Oil Flow	---	---	GPM	(255) .69	
	11) Cooling Oil Temperature	150	230	°F	195	
	12) Cooling Oil Out Temperature	---	---	°F	192	A

.... NOTE ....
TS, MODEL NUMBER AND SERIAL NUMBER MUST APPEAR ON EVERY PAGE
RETAIN ONE COPY OF THIS DATA SHEET FOR QA FILE

Sundstrand
Advanced Technology
Operations
unit of Sundstrand Corporation
4747 HARRISON AVENUE, ROCKFORD, IL 61101

TEST RECORD–CONTINUATION

TEST SPEC: 2538 REV. A

MODEL NO. ORC1A3A01 SERIAL NO. 002 DATE 3-21-78 DATA SHEET 32 OF 120

PROCEDURE PARAGRAPH NUMBER	PARAMETER DESCRIPTION	--REQUIREMENT-- MINIMUM	MAXIMUM	UNITS	ACTUAL READING
5.1.4.2	Load and Efficiency-Separately Excited-				
#6	TEST "A" (No Load)				
	1) Residual Voltage				
	T_1-T_2	---	---	VAC	5.6
	T_1-T_3	---	---	VAC	5.6
	T_3-T_2	---	---	VAC	5.6
	2) Alternator Speed	33,400	34,000	RPM	33700
	3) Torque	---	---	IN-LBS.	.53
	4) Housing Pressure	21	---	In.Hg.	22.8
	5) Winding Temperatures				
	TC_1	180	275	°F	195
	TC_2	180	275	°F	198
	TC_3	180	275	°F	196
	TC_4	180	275	°F	197
	6) Cooling Oil Flow	---	---	GPM	(260) .71
	7) Cooling Oil Temperature	150	230	°F	209
	8) Cooling Oil Out Temperature	---	---	°F	203

.... NOTE ....
TS, MODEL NUMBER AND SERIAL NUMBER MUST APPEAR ON EVERY PAGE
RETAIN ONE COPY OF THIS DATA SHEET FOR QA FILE

Sundstrand
Advanced Technology
Operations
unit of Sundstrand Corporation
4747 HARRISON AVENUE, ROCKFORD, IL 61101

TEST RECORD–CONTINUATION

TEST SPEC: 2538 REV. A

MODEL NO. ORC1A3A01 SERIAL NO. 002 DATE 3-21-78 DATA SHEET 33 OF 120

PROCEDURE PARAGRAPH NUMBER	PARAMETER DESCRIPTION	REQUIREMENT MINIMUM	REQUIREMENT MAXIMUM	UNITS	ACTUAL READING	
5.1.4.2	Load and Efficiency-Separately Excited-					
#6	TEST "B" (500 Watts)					
	1) Three Phase Voltage					
	T_1-T_2	21.5	23.5	VAC	22.2	
	T_1-T_3	21.5	23.5	VAC	22.2	
	T_3-T_2	21.5	23.5	VAC	22.3	
	2) Three Phase Amps (AC)					
	Phase 1	11.3	13.4	Amps	12.2	
	Phase 2	11.3	13.4	Amps	12.2	
	Phase 3	11.3	13.4	Amps	12.2	
	3) Three Phase Watts (AC) W_1	---	---	Watts	238	
	W_3	---	---	Watts	224	
	$W_1 + W_3$	460	500	Watts	462	
	4) Field Voltage	---	---	VDC	4.3	
	5) Field Current	---	1.10	Amps	.90	
	6) Alternator Speed	33,400	34,000	RPM	33700	
	7) Torque	---	---	IN.LBS.	1.89	
	8) Housing Pressure	21	---	In.Hg.	22.8	
	9) Winding Temperatures					
	TC_1	180	275	°F	197	A
	TC_2	180	275	°F	202	A
	TC_3	180	275	°F	199	A
	TC_4	180	275	°F	200	A
	10) Cooling Oil Flow	---	---	GPM	(253) .69	
	11) Cooling Oil Temperature	150	230	°F	196	
	12) Cooling Oil Out Temperature	---	---	°F	192	A

.... NOTE ....
TS, MODEL NUMBER AND SERIAL NUMBER MUST APPEAR ON EVERY PAGE
RETAIN ONE COPY OF THIS DATA SHEET FOR QA FILE

MODEL NO. ORC1A3A01 SERIAL NO. 002 DATE 3-21-78 DATA SHEET 34 OF 120

PROCEDURE PARAGRAPH NUMBER	PARAMETER DESCRIPTION	REQUIREMENT MINIMUM	REQUIREMENT MAXIMUM	UNITS	ACTUAL READING	
5.1.4.2	Load and Efficiency-Separately Excited-					
#7	TEST "A" (No Load)					
	1) Residual Voltage					
	T_1-T_2	---	---	VAC	5.6	
	T_1-T_3	---	---	VAC	5.6	
	T_3-T_2	---	---	VAC	5.6	
	2) Alternator Speed	33,400	34,000	RPM	33700	
	3) Torque	---	---	IN-LBS.	.51	
	4) Housing Pressure	21	---	In.Hg.	22.8	
	5) Winding Temperatures					
	TC_1	180	275	°F	195	A
	TC_2	180	275	°F	195	A
	TC_3	180	275	°F	195	A
	TC_4	180	275	°F	197	A
	6) Cooling Oil Flow	---	---	GPM	(248) .68	
	7) Cooling Oil Temperature	150	230	°F	216	
	8) Cooling Oil Out Temperature	---	---	°F	207	A

.... NOTE ....
TS, MODEL NUMBER AND SERIAL NUMBER MUST APPEAR ON EVERY PAGE
RETAIN ONE COPY OF THIS DATA SHEET FOR QA FILE

Sundstrand Advanced Technology Operations
unit of Sundstrand Corporation
4747 HARRISON AVENUE, ROCKFORD, IL 61101

TEST RECORD–CONTINUATION

PAGE NO. 51

TEST SPEC: 2538 REV. A

MODEL NO. ORC1A3A01 SERIAL NO. 002 DATE 3-21-78 DATA SHEET 35 OF 120

PROCEDURE PARAGRAPH NUMBER	PARAMETER DESCRIPTION	REQUIREMENT MINIMUM	REQUIREMENT MAXIMUM	UNITS	ACTUAL READING	
5.1.4.2	Load and Efficiency-Separately Excited-					
#7	TEST "B" (500 Watts)					
	1) Three Phase Voltage					
	T_1-T_2	21.5	23.5	VAC	22.0	
	T_1-T_3	21.5	23.5	VAC	21.9	
	T_3-T_2	21.5	23.5	VAC	21.8	
	2) Three Phase Amps (AC)					
	Phase 1	11.3	13.4	Amps	12.3	
	Phase 2	11.3	13.4	Amps	12.3	
	Phase 3	11.3	13.4	Amps	12.3	
	3) Three Phase Watts (AC) W_1	---	---	Watts	243	
	W_3	---	---	Watts	229	
	$W_1 + W_3$	460	500	Watts	472	
	4) Field Voltage	---	---	VDC	4.4	
	5) Field Current	---	1.10	Amps	.90	
	6) Alternator Speed	33,400	34,000	RPM	33700	
	7) Torque	---	---	IN.LBS.	1.83	
	8) Housing Pressure	21	---	In.Hg.	22.8	
	9) Winding Temperatures					
	TC_1	180	275	°F	194	A
	TC_2	180	275	°F	198	A
	TC_3	180	275	°F	196	A
	TC_4	180	275	°F	197	A
	10) Cooling Oil Flow	---	---	GPM	(250) .68	
	11) Cooling Oil Temperature	150	230	°F	202	
	12) Cooling Oil Out Temperature	---	---	°F	198	A

.... NOTE ....
TS, MODEL NUMBER AND SERIAL NUMBER MUST APPEAR ON EVERY PAGE
RETAIN ONE COPY OF THIS DATA SHEET FOR QA FILE

Sundstrand
Advanced Technology
Operations
unit of Sundstrand Corporation
4747 HARRISON AVENUE, ROCKFORD, IL 61101

TEST RECORD–CONTINUATION

TEST SPEC: 2538 REV. A

MODEL NO. ORC1A3A01 SERIAL NO. 002 DATE 3-21-78 DATA SHEET 36 OF 120

PROCEDURE PARAGRAPH NUMBER	PARAMETER DESCRIPTION	REQUIREMENT MINIMUM	REQUIREMENT MAXIMUM	UNITS	ACTUAL READING	
5.1.4.3	Load and Efficiency-Separately Excited-					
#1	TEST "A" (No Load)					
	1) Residual Voltage					
	T_1-T_2	---	---	VAC	5.6	
	T_1-T_3	---	---	VAC	5.6	
	T_3-T_2	---	---	VAC	5.6	
	2) Alternator Speed	33,400	34,000	RPM	33700	
	3) Torque	---	---	IN-LBS.	.52	
	4) Housing Pressure	21	---	In.Hg.	22.8	
	5) Winding Temperatures					
	TC_1	180	275	°F	193	A
	TC_2	180	275	°F	196	A
	TC_3	180	275	°F	194	A
	TC_4	180	275	°F	195	A
	6) Cooling Oil Flow	---	---	GPM	(247) .67	
	7) Cooling Oil Temperature	150	230	°F	207	
	8) Cooling Oil Out Temperature	---	---	°F	199	A

.... NOTE ....
TS, MODEL NUMBER AND SERIAL NUMBER MUST APPEAR ON EVERY PAGE
RETAIN ONE COPY OF THIS DATA SHEET FOR QA FILE

MODEL NO. ORC1A3A01 SERIAL NO. 002 DATE 3-21-78 DATA SHEET 37 OF 120

PROCEDURE PARAGRAPH NUMBER	PARAMETER DESCRIPTION	REQUIREMENT MINIMUM	REQUIREMENT MAXIMUM	UNITS	ACTUAL READING	
5.1.4.3	Load and Efficiency-Separately Excited-					
#1	TEST "B" (1000 Watts)					
	1) Three Phase Voltage					
	T_1-T_2	21.5	23.5	VAC	22.7	
	T_1-T_3	21.5	23.5	VAC	22.7	
	T_3-T_2	21.5	23.5	VAC	22.7	
	2) Three Phase Amps (AC)					
	Phase 1	25.3	29.3	Amps	27.6	
	Phase 2	25.3	29.3	Amps	27.7	
	Phase 3	25.3	29.3	Amps	27.7	
	3) Three Phase Watts (AC) W_1	---	---	Watts	580	
	W_3	---	---	Watts	509	
	$W_1 + W_3$	1030	1090	Watts	1089	
	4) Field Voltage	---	---	VDC	6.2	
	5) Field Current	---	1.45	Amps	1.30	
	6) Alternator Speed	33,400	34,000	RPM	33700	
	7) Torque	---	---	IN.LBS.	3.49	
	8) Housing Pressure	21	---	In.Hg.	22.8	
	9) Winding Temperatures					
	TC_1	180	275	°F	197	A
	TC_2	180	275	°F	201	A
	TC_3	180	275	°F	198	A
	TC_4	180	275	°F	199	A
	10) Cooling Oil Flow	---	---	GPM	(2r3) .69	
	11) Cooling Oil Temperature	150	230	°F	210	
	12) Cooling Oil Out Temperature	---	---	°F	204	A

.... NOTE ....
TS, MODEL NUMBER AND SERIAL NUMBER MUST APPEAR ON EVERY PAGE
RETAIN ONE COPY OF THIS DATA SHEET FOR QA FILE

Sundstrand
Advanced Technology
Operations
unit of Sundstrand Corporation
4747 HARRISON AVENUE, ROCKFORD, IL 61101

TEST RECORD–CONTINUATION

TEST SPEC: 2538 REV. A

MODEL NO. ORC1A3A01 SERIAL NO. 002 DATE 3-21-78 DATA SHEET 38 OF 120

PROCEDURE PARAGRAPH NUMBER	PARAMETER DESCRIPTION	REQUIREMENT MINIMUM	REQUIREMENT MAXIMUM	UNITS	ACTUAL READING	
5.1.4.3	Load and Efficiency-Separately Excited-					
#2	TEST "A" (No Load)					
	1) Residual Voltage					
	T_1-T_2	---	---	VAC	5.2	
	T_1-T_3	---	---	VAC	5.2	
	T_3-T_2	---	---	VAC	5.2	
	2) Alternator Speed	33,400	34,000	RPM	33700	
	3) Torque	---	---	IN-LBS.	.52	
	4) Housing Pressure	21	---	In.Hg.	22.8	
	5) Winding Temperatures					
	TC_1	180	275	°F	196	A
	TC_2	180	275	°F	200	A
	TC_3	180	275	°F	197	A
	TC_4	180	275	°F	199	A
	6) Cooling Oil Flow	---	---	GPM	(255) .69	
	7) Cooling Oil Temperature	150	230	°F	199	
	8) Cooling Oil Out Temperature	---	---	°F	194	A

.... NOTE ....
TS, MODEL NUMBER AND SERIAL NUMBER MUST APPEAR ON EVERY PAGE
RETAIN ONE COPY OF THIS DATA SHEET FOR QA FILE

Sundstrand Advanced Technology Operations
unit of Sundstrand Corporation
4747 HARRISON AVENUE, ROCKFORD, IL 61101

TEST RECORD–CONTINUATION

PAGE NO. 55

TEST SPEC: 2538 REV. A

MODEL NO. ORC1A3A01 SERIAL NO. 002 DATE 3-21-78 DATA SHEET 39 OF 120

PROCEDURE PARAGRAPH NUMBER	PARAMETER DESCRIPTION	REQUIREMENT MINIMUM	REQUIREMENT MAXIMUM	UNITS	ACTUAL READING	
5.1.4.3	Load and Efficiency-Separately Excited-					
#2	TEST "B" (1000 Watts)					
	1) Three Phase Voltage					
	T_1-T_2	21.5	23.5	VAC	22.7	
	T_1-T_3	21.5	23.5	VAC	22.7	
	T_3-T_2	21.5	23.5	VAC	22.7	
	2) Three Phase Amps (AC)					
	Phase 1	25.3	29.3	Amps	27.6	
	Phase 2	25.3	29.3	Amps	27.6	
	Phase 3	25.3	29.3	Amps	27.7	
	3) Three Phase Watts (AC) W_1	---	---	Watts	577	
	W_3	---	---	Watts	507	
	$W_1 + W_3$	1030	1090	Watts	1084	
	4) Field Voltage	---	---	VDC	6.2	
	5) Field Current	---	1.45	Amps	1.30	
	6) Alternator Speed	33,400	34,000	RPM	33700	
	7) Torque	---	---	IN.LBS.	3.42	
	8) Housing Pressure	21	---	In.Hg.	22.8	
	9) Winding Temperatures					
	TC_1	180	275	°F	195	A
	TC_2	180	275	°F	199	A
	TC_3	180	275	°F	197	A
	TC_4	180	275	°F	198	A
	10) Cooling Oil Flow	---	---	GPM	(250) .68	
	11) Cooling Oil Temperature	150	230	°F	194	
	12) Cooling Oil Out Temperature	---	---	°F	191	A

.... NOTE ....
TS, MODEL NUMBER AND SERIAL NUMBER MUST APPEAR ON EVERY PAGE
RETAIN ONE COPY OF THIS DATA SHEET FOR QA FILE

Sundstrand
Advanced Technology
Operations
unit of Sundstrand Corporation
4747 HARRISON AVENUE, ROCKFORD, IL 61101

TEST RECORD–CONTINUATION

TEST SPEC: 2538 REV. A

MODEL NO. ORC1A3A01 SERIAL NO. 002 DATE 3-21-78 DATA SHEET 40 OF 120

PROCEDURE PARAGRAPH NUMBER	PARAMETER DESCRIPTION	REQUIREMENT MINIMUM	REQUIREMENT MAXIMUM	UNITS	ACTUAL READING	
5.1.4.3	Load and Efficiency-Separately Excited-					
#3	TEST "A" (No Load)					
	1) Residual Voltage					
	T_1-T_2	---	---	VAC	5.2	
	T_1-T_3	---	---	VAC	5.2	
	T_3-T_2	---	---	VAC	5.2	
	2) Alternator Speed	33,400	34,000	RPM	33700	
	3) Torque	---	---	IN-LBS.	.49	
	4) Housing Pressure	21	---	In.Hg.	22.8	
	5) Winding Temperatures					
	TC_1	180	275	°F	195	A
	TC_2	180	275	°F	198	A
	TC_3	180	275	°F	196	A
	TC_4	180	275	°F	197	A
	6) Cooling Oil Flow	---	---	GPM	(265) .72	
	7) Cooling Oil Temperature	150	230	°F	206	
	8) Cooling Oil Out Temperature	---	---	°F	201	A

.... NOTE ....
TS, MODEL NUMBER AND SERIAL NUMBER MUST APPEAR ON EVERY PAGE
RETAIN ONE COPY OF THIS DATA SHEET FOR QA FILE

Sundstrand
Advanced Technology
Operations
unit of Sundstrand Corporation
4747 HARRISON AVENUE, ROCKFORD, IL 61101

TEST RECORD–CONTINUATION

TEST SPEC: 2538 REV. A

MODEL NO. ORC1A3A01 SERIAL NO. 002 DATE 3-21-78 DATA SHEET 41 OF 120

PROCEDURE PARAGRAPH NUMBER	PARAMETER DESCRIPTION	REQUIREMENT MINIMUM	REQUIREMENT MAXIMUM	UNITS	ACTUAL READING	
5.1.4.3	Load and Efficiency-Separately Excited-					
#3	TEST "B" (1000 Watts)					
	1) Three Phase Voltage					
	T_1-T_2	21.5	23.5	VAC	22.5	
	T_1-T_3	21.5	23.5	VAC	22.5	
	T_3-T_2	21.5	23.5	VAC	22.5	
	2) Three Phase Amps (AC)					
	Phase 1	25.3	29.3	Amps	27.2	
	Phase 2	25.3	29.3	Amps	27.2	
	Phase 3	25.3	29.3	Amps	27.2	
	3) Three Phase Watts (AC) W_1	---	---	Watts	557	
	W_3	---	---	Watts	488	
	$W_1 + W_3$	1030	1090	Watts	1045	
	4) Field Voltage	---	---	VDC	6.1	
	5) Field Current	---	1.45	Amps	1.28	
	6) Alternator Speed	33,400	34,000	RPM	33700	
	7) Torque	---	---	IN.LBS.	3.38	
	8) Housing Pressure	21	---	In.Hg.	22.8	
	9) Winding Temperatures					
	TC_1	180	275	°F	197	A
	TC_2	180	275	°F	201	A
	TC_3	180	275	°F	199	A
	TC_4	180	275	°F	199	A
	10) Cooling Oil Flow	---	---	GPM	(252) .68	
	11) Cooling Oil Temperature	150	230	°F	210	
	12) Cooling Oil Out Temperature	---	---	°F	201	A

.... NOTE ....
TS, MODEL NUMBER AND SERIAL NUMBER MUST APPEAR ON EVERY PAGE
RETAIN ONE COPY OF THIS DATA SHEET FOR QA FILE

Sundstrand
Advanced Technology
Operations
unit of Sundstrand Corporation
4747 HARRISON AVENUE, ROCKFORD, IL 61101

TEST RECORD—CONTINUATION

TEST SPEC: 2538 REV. A

MODEL NO. ORC1A3A01 SERIAL NO. 002 DATE 3-21-78 DATA SHEET 42 OF 120

PROCEDURE PARAGRAPH NUMBER	PARAMETER DESCRIPTION	REQUIREMENT MINIMUM	REQUIREMENT MAXIMUM	UNITS	ACTUAL READING	
5.1.4.3	Load and Efficiency-Separately Excited-					
#4	TEST "A" (No Load)					
	1) Residual Voltage					
	T_1-T_2	---	---	VAC	5.2	
	T_1-T_3	---	---	VAC	5.2	
	T_3-T_2	---	---	VAC	5.2	
	2) Alternator Speed	33,400	34,000	RPM	33700	
	3) Torque	---	---	IN-LBS.	.51	
	4) Housing Pressure	21	---	In.Hg.	22.8	
	5) Winding Temperatures					
	TC_1	180	275	°F	195	A
	TC_2	180	275	°F	199	A
	TC_3	180	275	°F	197	A
	TC_4	180	275	°F	198	A
	6) Cooling Oil Flow	---	---	GPM	(266) .73	
	7) Cooling Oil Temperature	150	230	°F	198	
	8) Cooling Oil Out Temperature	---	---	°F	194	A

.... NOTE ....
TS, MODEL NUMBER AND SERIAL NUMBER MUST APPEAR ON EVERY PAGE
RETAIN ONE COPY OF THIS DATA SHEET FOR QA FILE

Sundstrand Advanced Technology Operations
unit of Sundstrand Corporation
4747 HARRISON AVENUE, ROCKFORD, IL 61101

TEST RECORD–CONTINUATION

PAGE NO. 59

TEST SPEC: 2538 REV. A

MODEL NO. ORC1A3A01 SERIAL NO. 002 DATE 3-21-78 DATA SHEET 43 OF 120

PROCEDURE PARAGRAPH NUMBER	PARAMETER DESCRIPTION	REQUIREMENT MINIMUM	REQUIREMENT MAXIMUM	UNITS	ACTUAL READING	
5.1.4.3	Load and Efficiency-Separately Excited-					
#4	TEST "B" (1000 Watts)					
	1) Three Phase Voltage					
	T_1-T_2	21.5	23.5	VAC	22.4	
	T_1-T_3	21.5	23.5	VAC	22.4	
	T_3-T_2	21.5	23.5	VAC	22.4	
	2) Three Phase Amps (AC)					
	Phase 1	25.3	29.3	Amps	27.2	
	Phase 2	25.3	29.3	Amps	27.3	
	Phase 3	25.3	29.3	Amps	27.3	
	3) Three Phase Watts (AC) W_1	---	---	Watts	569	
	W_3	---	---	Watts	497	
	$W_1 + W_3$	1030	1090	Watts	1066	
	4) Field Voltage	---	---	VDC	6.1	
	5) Field Current	---	1.45	Amps	1.29	
	6) Alternator Speed	33,400	34,000	RPM	33700	
	7) Torque	---	---	IN.LBS.	3.37	
	8) Housing Pressure	21	---	In.Hg.	22.8	
	9) Winding Temperatures					
	TC_1	180	275	°F	196	A
	TC_2	180	275	°F	200	A
	TC_3	180	275	°F	198	A
	TC_4	180	275	°F	198	A
	10) Cooling Oil Flow	---	---	GPM	(2PU) .69	
	11) Cooling Oil Temperature	150	230	°F	202	
	12) Cooling Oil Out Temperature	---	---	°F	197	A

.... NOTE ....
TS, MODEL NUMBER AND SERIAL NUMBER MUST APPEAR ON EVERY PAGE
RETAIN ONE COPY OF THIS DATA SHEET FOR QA FILE

Sundstrand Advanced Technology Operations
unit of Sundstrand Corporation
4747 HARRISON AVENUE, ROCKFORD, IL 61101

TEST RECORD–CONTINUATION

PAGE NO. 60

TEST SPEC: 2538 REV. A

MODEL NO. ORC1A3A01 SERIAL NO. 002 DATE 3-21-78 DATA SHEET 44 OF 120

PROCEDURE PARAGRAPH NUMBER	PARAMETER DESCRIPTION	REQUIREMENT MINIMUM	REQUIREMENT MAXIMUM	UNITS	ACTUAL READING	
5.1.4.3	Load and Efficiency-Separately Excited-					
#5	TEST "A" (No Load)					
	1) Residual Voltage					
	T_1-T_2	---	---	VAC	5.2	
	T_1-T_3	---	---	VAC	5.2	
	T_3-T_2	---	---	VAC	5.2	
	2) Alternator Speed	33,400	34,000	RPM	33700	
	3) Torque	---	---	IN-LBS.	.52	
	4) Housing Pressure	21	---	In.Hg.	22.8	
	5) Winding Temperatures					
	TC_1	180	275	°F	197	A
	TC_2	180	275	°F	200	A
	TC_3	180	275	°F	188	A
	TC_4	180	275	°F	189	A
	6) Cooling Oil Flow	---	---	GPM	(2TL) .68	
	7) Cooling Oil Temperature	150	230	°F	188	
	8) Cooling Oil Out Temperature	---	---	°F	194	A

.... NOTE ....
TS, MODEL NUMBER AND SERIAL NUMBER MUST APPEAR ON EVERY PAGE
RETAIN ONE COPY OF THIS DATA SHEET FOR QA FILE

Sundstrand
Advanced Technology
Operations
unit of Sundstrand Corporation
4747 HARRISON AVENUE, ROCKFORD, IL 61101

TEST RECORD–CONTINUATION

TEST SPEC: 2538 REV. A

MODEL NO. ORC1A3A01 SERIAL NO. 002 DATE 3-21-78 DATA SHEET 45 OF 120

PROCEDURE PARAGRAPH NUMBER	PARAMETER DESCRIPTION	REQUIREMENT MINIMUM	REQUIREMENT MAXIMUM	UNITS	ACTUAL READING	
5.1.4.3	Load and Efficiency-Separately Excited-					
#5	TEST "B" (1000 Watts)					
	1) Three Phase Voltage					
	T_1-T_2	21.5	23.5	VAC	22.7	
	T_1-T_3	21.5	23.5	VAC	22.7	
	T_3-T_2	21.5	23.5	VAC	22.7	
	2) Three Phase Amps (AC)					
	Phase 1	25.3	29.3	Amps	27.4	
	Phase 2	25.3	29.3	Amps	27.4	
	Phase 3	25.3	29.3	Amps	27.4	
	3) Three Phase Watts (AC) W_1	---	---	Watts	568	
	W_3	---	---	Watts	497	
	$W_1 + W_3$	1030	1090	Watts	1065	
	4) Field Voltage	---	---	VDC	6.1	
	5) Field Current	---	1.45	Amps	1.29	
	6) Alternator Speed	33,400	34,000	RPM	33700	
	7) Torque	---	---	IN.LBS.	3.45	
	8) Housing Pressure	21	---	In.Hg.	22.8	
	9) Winding Temperatures					
	TC_1	180	275	°F	200	A
	TC_2	180	275	°F	204	A
	TC_3	180	275	°F	202	A
	TC_4	180	275	°F	202	A
	10) Cooling Oil Flow	---	---	GPM	(264) .72	
	11) Cooling Oil Temperature	150	230	°F	197	
	12) Cooling Oil Out Temperature	---	---	°F	193	A

.... NOTE ....
TS, MODEL NUMBER AND SERIAL NUMBER MUST APPEAR ON EVERY PAGE
RETAIN ONE COPY OF THIS DATA SHEET FOR QA FILE

Sundstrand Advanced Technology Operations
unit of Sundstrand Corporation
4747 HARRISON AVENUE, ROCKFORD, IL 61101

TEST RECORD–CONTINUATION

PAGE NO. 62

TEST SPEC: 2538 REV. A

MODEL NO. ORC1A3A01 SERIAL NO. 002 DATE 3-21-78 DATA SHEET 46 OF 120

PROCEDURE PARAGRAPH NUMBER	PARAMETER DESCRIPTION	REQUIREMENT MINIMUM	REQUIREMENT MAXIMUM	UNITS	ACTUAL READING	
5.1.4.3	Load and Efficiency-Separately Excited-					
#6	TEST "A" (No Load)					
	1) Residual Voltage					
	T_1-T_2	---	---	VAC	5.2	
	T_1-T_3	---	---	VAC	5.2	
	T_3-T_2	---	---	VAC	5.2	
	2) Alternator Speed	33,400	34,000	RPM	33700	
	3) Torque	---	---	IN-LBS.	.50	
	4) Housing Pressure	21	---	In.Hg.	22.8	
	5) Winding Temperatures					
	TC_1	180	275	°F	196	A
	TC_2	180	275	°F	200	A
	TC_3	180	275	°F	198	A
	TC_4	180	275	°F	198	A
	6) Cooling Oil Flow	---	---	GPM	(248) .68	
	7) Cooling Oil Temperature	150	230	°F	203	
	8) Cooling Oil Out Temperature	---	---	°F	198	A

.... NOTE ....
TS, MODEL NUMBER AND SERIAL NUMBER MUST APPEAR ON EVERY PAGE
RETAIN ONE COPY OF THIS DATA SHEET FOR QA FILE

MODEL NO. ORC1A3A01 SERIAL NO. 002 DATE 3-21-78 DATA SHEET 47 OF 120

PROCEDURE PARAGRAPH NUMBER	PARAMETER DESCRIPTION	REQUIREMENT MINIMUM	REQUIREMENT MAXIMUM	UNITS	ACTUAL READING
5.1.4.3	Load and Efficiency-Separately Excited-				
#6	TEST "B" (1000 Watts)				
	1) Three Phase Voltage				
	T_1-T_2	21.5	23.5	VAC	22.6
	T_1-T_3	21.5	23.5	VAC	22.6
	T_3-T_2	21.5	23.5	VAC	22.6
	2) Three Phase Amps (AC)				
	Phase 1	25.3	29.3	Amps	27.2
	Phase 2	25.3	29.3	Amps	27.3
	Phase 3	25.3	29.3	Amps	27.3
	3) Three Phase Watts (AC) W_1	---	---	Watts	564
	W_3	---	---	Watts	493
	$W_1 + W_3$	1030	1090	Watts	1057
	4) Field Voltage	---	---	VDC	6.2
	5) Field Current	---	1.45	Amps	1.30
	6) Alternator Speed	33,400	34,000	RPM	33700
	7) Torque	---	---	IN.LBS.	3.42
	8) Housing Pressure	21	---	In.Hg.	22.8
	9) Winding Temperatures				
	TC_1	180	275	°F	198 A
	TC_2	180	275	°F	202 A
	TC_3	180	275	°F	200 A
	TC_4	180	275	°F	200 A
	10) Cooling Oil Flow	---	---	GPM	(250) .68
	11) Cooling Oil Temperature	150	230	°F	212
	12) Cooling Oil Out Temperature	---	---	°F	205 A

.... NOTE ....
TS, MODEL NUMBER AND SERIAL NUMBER MUST APPEAR ON EVERY PAGE
RETAIN ONE COPY OF THIS DATA SHEET FOR QA FILE

Sundstrand
Advanced Technology
Operations
unit of Sundstrand Corporation
4747 HARRISON AVENUE, ROCKFORD, IL 61101

TEST RECORD–CONTINUATION

TEST SPEC: 2538 REV. A

MODEL NO. ORC1A3A01 SERIAL NO. 002 DATE 3-21-78 DATA SHEET 48 OF 120

PROCEDURE PARAGRAPH NUMBER	PARAMETER DESCRIPTION	REQUIREMENT MINIMUM	REQUIREMENT MAXIMUM	UNITS	ACTUAL READING	
5.1.4.3	Load and Efficiency-Separately Excited-					
#7	TEST "A" (No Load)					
	1) Residual Voltage					
	T_1-T_2	---	---	VAC	5.2	
	T_1-T_3	---	---	VAC	5.2	
	T_3-T_2	---	---	VAC	5.2	
	2) Alternator Speed	33,400	34,000	RPM	33700	
	3) Torque	---	---	IN-LBS.	.51	
	4) Housing Pressure	21	---	In.Hg.	22.8	
	5) Winding Temperatures					
	TC_1	180	275	°F	197	A
	TC_2	180	275	°F	201	A
	TC_3	180	275	°F	199	A
	TC_4	180	275	°F	200	A
	6) Cooling Oil Flow	---	---	GPM	(255) .69	
	7) Cooling Oil Temperature	150	230	°F	198	
	8) Cooling Oil Out Temperature	---	---	°F	194	A

.... NOTE ....
TS, MODEL NUMBER AND SERIAL NUMBER MUST APPEAR ON EVERY PAGE
RETAIN ONE COPY OF THIS DATA SHEET FOR QA FILE

MODEL NO. ORC1A3A01 SERIAL NO. 002 DATE 3-21-78 DATA SHEET 49 OF 120

PROCEDURE PARAGRAPH NUMBER	PARAMETER DESCRIPTION	REQUIREMENT MINIMUM	REQUIREMENT MAXIMUM	UNITS	ACTUAL READING
5.1.4.3	Load and Efficiency-Separately Excited-				
#7	TEST "B" (1000 Watts)				
	1) Three Phase Voltage				
	T_1-T_2	21.5	23.5	VAC	22.5
	T_1-T_3	21.5	23.5	VAC	22.5
	T_3-T_2	21.5	23.5	VAC	22.5
	2) Three Phase Amps (AC)				
	Phase 1	25.3	29.3	Amps	27.3
	Phase 2	25.3	29.3	Amps	27.3
	Phase 3	25.3	29.3	Amps	27.3
	3) Three Phase Watts (AC) W_1	---	---	Watts	565
	W_3	---	---	Watts	494
	$W_1 + W_3$	1030	1090	Watts	1059
	4) Field Voltage	---	---	VDC	6.2
	5) Field Current	---	1.45	Amps	1.30
	6) Alternator Speed	33,400	34,000	RPM	33700
	7) Torque	---	---	IN.LBS.	3.40
	8) Housing Pressure	21	---	In.Hg.	22.8
	9) Winding Temperatures				
	TC_1	180	275	°F	198 A
	TC_2	180	275	°F	202 A
	TC_3	180	275	°F	200 A
	TC_4	180	275	°F	200 A
	10) Cooling Oil Flow	---	---	GPM	(261) .71
	11) Cooling Oil Temperature	150	230	°F	203
	12) Cooling Oil Out Temperature	---	---	°F	199 A

.... NOTE ....
TS, MODEL NUMBER AND SERIAL NUMBER MUST APPEAR ON EVERY PAGE
RETAIN ONE COPY OF THIS DATA SHEET FOR QA FILE

Sundstrand
Advanced Technology
Operations
unit of Sundstrand Corporation
4747 HARRISON AVENUE, ROCKFORD, IL 61101

TEST RECORD–CONTINUATION

TEST SPEC: 2538 REV. A

MODEL NO. ORC1A3A01 SERIAL NO. 002 DATE 3-22-78 DATA SHEET 50 OF 120

TEST MAN: 4931

PROCEDURE PARAGRAPH NUMBER	PARAMETER DESCRIPTION	REQUIREMENT MINIMUM	REQUIREMENT MAXIMUM	UNITS	ACTUAL READING
5.1.4.4	Load and Efficiency-Separately Excited-				
#1	TEST "A" (No Load)				
	1) Residual Voltage				
	T_1-T_2	---	---	VAC	~~5.2~~ 4.9
	T_1-T_3	---	---	VAC	~~5.2~~ 4.9
	T_3-T_2	---	---	VAC	~~5.2~~ 4.9
	2) Alternator Speed	33,400	34,000	RPM	33700
	3) Torque	---	---	IN-LBS.	~~80~~ .82
	4) Housing Pressure	21	---	In.Hg.	22.8
	5) Winding Temperatures				
	TC_1	180	275	°F	~~189~~ 191
	TC_2	180	275	°F	~~192~~ 198
	TC_3	180	275	°F	~~188~~ 196
	TC_4	180	275	°F	~~190~~ 197
	6) Cooling Oil Flow	---	---	GPM	(248) .68
	7) Cooling Oil Temperature	150	230	°F	~~214~~ 201
	8) Cooling Oil Out Temperature	---	---	°F	~~205~~ 196

.... NOTE ....
TS, MODEL NUMBER AND SERIAL NUMBER MUST APPEAR ON EVERY PAGE
RETAIN ONE COPY OF THIS DATA SHEET FOR QA FILE

Sundstrand Advanced Technology Operations
unit of Sundstrand Corporation
4747 HARRISON AVENUE, ROCKFORD, IL 61101

TEST RECORD–CONTINUATION

PAGE NO. 67

TEST SPEC: 2538 REV. A

MODEL NO. ORC1A3A01 SERIAL NO. 002 DATE 3-22-78 DATA SHEET 51 OF 120

PROCEDURE PARAGRAPH NUMBER	PARAMETER DESCRIPTION	REQUIREMENT MINIMUM	REQUIREMENT MAXIMUM	UNITS	ACTUAL READING	
5.1.4.1	Load and Efficiency-Separately Excited-					
#1	TEST "B" (2200 Watts)					
	1) Three Phase Voltage					
	T_1-T_2	21.5	23.5	VAC	22.4	
	T_1-T_3	21.5	23.5	VAC	22.4	
	T_3-T_2	21.5	23.5	VAC	22.5	
	2) Three Phase Amps (AC)					
	Phase 1	52.0	61.0	Amps	56.8	
	Phase 2	52.0	61.0	Amps	56.8	
	Phase 3	52.0	61.0	Amps	56.8	
	3) Three Phase Watts (AC) W_1	---	---	Watts	1247	
	W_3	---	---	Watts	949	
	$W_1 + W_3$	2120	2280	Watts	2196	
	4) Field Voltage	---	---	VDC	11.2	
	5) Field Current	---	2.60	Amps	2.30	
	6) Alternator Speed	33,400	34,000	RPM	33700	
	7) Torque	---	---	IN.LBS.	6.58	
	8) Housing Pressure	21	---	In.Hg.	22.8	
	9) Winding Temperatures					
	TC_1	180	275	°F	204	A
	TC_2	180	275	°F	206	A
	TC_3	180	275	°F	205	A
	TC_4	180	275	°F	205	A
	10) Cooling Oil Flow	---	---	GPM	(249) .68	
	11) Cooling Oil Temperature	150	230	°F	208	
	12) Cooling Oil Out Temperature	---	---	°F	200	A

.... NOTE ....
TS, MODEL NUMBER AND SERIAL NUMBER MUST APPEAR ON EVERY PAGE
RETAIN ONE COPY OF THIS DATA SHEET FOR QA FILE

Sundstrand
Advanced Technology
Operations
unit of Sundstrand Corporation
4747 HARRISON AVENUE, ROCKFORD, IL 61101

TEST RECORD–CONTINUATION

TEST SPEC: 2538 REV. A

MODEL NO. ORC1A3A01 SERIAL NO. 002 DATE 3-22-78 DATA SHEET 52 OF 120

PROCEDURE PARAGRAPH NUMBER	PARAMETER DESCRIPTION	REQUIREMENT MINIMUM	REQUIREMENT MAXIMUM	UNITS	ACTUAL READING	
5.1.4.4	Load and Efficiency-Separately Excited-					
#2	TEST "A" (No Load)					
	1) Residual Voltage					
	T_1-T_2	---	---	VAC	4.8	
	T_1-T_3	---	---	VAC	4.8	
	T_3-T_2	---	---	VAC	4.8	
	2) Alternator Speed	33,400	34,000	RPM	33700	
	3) Torque	---	---	IN-LBS.	.55	
	4) Housing Pressure	21	---	In.Hg.	22.8	
	5) Winding Temperatures					
	TC_1	180	275	°F	201	A
	TC_2	180	275	°F	204	A
	TC_3	180	275	°F	202	A
	TC_4	180	275	°F	203	A
	6) Cooling Oil Flow	---	---	GPM	(256) .70	
	7) Cooling Oil Temperature	150	230	°F	201	
	8) Cooling Oil Out Temperature	---	---	°F	186	A

.... NOTE ....
TS, MODEL NUMBER AND SERIAL NUMBER MUST APPEAR ON EVERY PAGE
RETAIN ONE COPY OF THIS DATA SHEET FOR QA FILE

Sundstrand Advanced Technology Operations
unit of Sundstrand Corporation
4747 HARRISON AVENUE, ROCKFORD, IL 61101

TEST RECORD–CONTINUATION

PAGE NO. 69

TEST SPEC: 2538 REV. A

MODEL NO. ORC1A3A01 SERIAL NO. 002 DATE 3-22-78 DATA SHEET 53 OF 120

TEST MAN : 2467

PROCEDURE PARAGRAPH NUMBER	PARAMETER DESCRIPTION	REQUIREMENT MINIMUM	REQUIREMENT MAXIMUM	UNITS	ACTUAL READING	
5.1.4.4	Load and Efficiency-Separately Excited-					
#2	TEST "B" (2200 Watts)					
	1) Three Phase Voltage					
	T_1-T_2	21.5	23.5	VAC	22.6	
	T_1-T_3	21.5	23.5	VAC	22.6	
	T_3-T_2	21.5	23.5	VAC	22.5	
	2) Three Phase Amps (AC)					
	Phase 1	52.0	61.0	Amps	57.4	
	Phase 2	52.0	61.0	Amps	57.5	
	Phase 3	52.0	61.0	Amps	57.5	
	3) Three Phase Watts (AC) W_1	---	---	Watts	1244	
	W_3	---	---	Watts	954	
	$W_1 + W_3$	2120	2280	Watts	2198	
	4) Field Voltage	---	---	VDC	11.6	
	5) Field Current	---	2.60	Amps	2.32	
	6) Alternator Speed	33,400	34,000	RPM	33700	
	7) Torque	---	---	IN.LBS.	6.57	
	8) Housing Pressure	21	---	In.Hg.	22.8	
	9) Winding Temperatures					
	TC_1	180	275	°F	211	A
	TC_2	180	275	°F	214	A
	TC_3	180	275	°F	212	A
	TC_4	180	275	°F	213	A
	10) Cooling Oil Flow	---	---	GPM	(250) .68	
	11) Cooling Oil Temperature	150	230	°F	201	
	12) Cooling Oil Out Temperature	---	---	°F	198	A

.... NOTE ....
TS, MODEL NUMBER AND SERIAL NUMBER MUST APPEAR ON EVERY PAGE
RETAIN ONE COPY OF THIS DATA SHEET FOR QA FILE

Sundstrand Advanced Technology Operations
unit of Sundstrand Corporation
4747 HARRISON AVENUE, ROCKFORD, IL 61101

TEST RECORD–CONTINUATION

PAGE NO. 70

TEST SPEC: 2538 REV. A

MODEL NO. ORC1A3A01 SERIAL NO. 002 DATE 3-22-78 DATA SHEET 54 OF 120

PROCEDURE PARAGRAPH NUMBER	PARAMETER DESCRIPTION	REQUIREMENT MINIMUM	REQUIREMENT MAXIMUM	UNITS	ACTUAL READING	
5.1.4.4	Load and Efficiency-Separately Excited-					
#3	TEST "A" (No Load)					
	1) Residual Voltage					
	T_1-T_2	---	---	VAC	4.8	
	T_1-T_3	---	---	VAC	4.8	
	T_3-T_2	---	---	VAC	4.8	
	2) Alternator Speed	33,400	34,000	RPM	33700	
	3) Torque	---	---	IN-LBS.	.61	
	4) Housing Pressure	21	---	In.Hg.	22.8	
	5) Winding Temperatures					
	TC_1	180	275	°F	206	A
	TC_2	180	275	°F	209	A
	TC_3	180	275	°F	207	A
	TC_4	180	275	°F	208	A
	6) Cooling Oil Flow	---	---	GPM	(253) .69	
	7) Cooling Oil Temperature	150	230	°F	197	
	8) Cooling Oil Out Temperature	---	---	°F	194	A

.... NOTE ....
TS, MODEL NUMBER AND SERIAL NUMBER MUST APPEAR ON EVERY PAGE
RETAIN ONE COPY OF THIS DATA SHEET FOR QA FILE

Sundstrand Advanced Technology Operations
unit of Sundstrand Corporation
4747 HARRISON AVENUE, ROCKFORD, IL 61101

TEST RECORD–CONTINUATION

PAGE NO. 71

TEST SPEC: 2538 REV. A

MODEL NO. ORC1A3A01 SERIAL NO. 002 DATE 3-22-78 DATA SHEET 55 OF 120

PROCEDURE PARAGRAPH NUMBER	PARAMETER DESCRIPTION	REQUIREMENT MINIMUM	REQUIREMENT MAXIMUM	UNITS	ACTUAL READING	
5.1.4.4	Load and Efficiency-Separately Excited-					
#3	TEST "B" (2200 Watts)					
	1) Three Phase Voltage					
	T_1-T_2	21.5	23.5	VAC	22.9	
	T_1-T_3	21.5	23.5	VAC	23.0	
	T_3-T_2	21.5	23.5	VAC	23.0	
	2) Three Phase Amps (AC)					
	Phase 1	52.0	61.0	Amps	57.3	
	Phase 2	52.0	61.0	Amps	57.5	
	Phase 3	52.0	61.0	Amps	57.5	
	3) Three Phase Watts (AC) W_1	---	---	Watts	1253	
	W_3	---	---	Watts	959	
	$W_1 + W_3$	2120	2280	Watts	2212	
	4) Field Voltage	---	---	VDC	11.2	
	5) Field Current	---	2.60	Amps	2.28	
	6) Alternator Speed	33,400	34,000	RPM	33700	
	7) Torque	---	---	IN.LBS.	6.62	
	8) Housing Pressure	21	---	In.Hg.	22.8	
	9) Winding Temperatures					
	TC_1	180	275	°F	210	A
	TC_2	180	275	°F	213	A
	TC_3	180	275	°F	211	A
	TC_4	180	275	°F	212	A
	10) Cooling Oil Flow	---	---	GPM	(251) .68	
	11) Cooling Oil Temperature	150	230	°F	200	
	12) Cooling Oil Out Temperature	---	---	°F	197	A

.... NOTE ....
TS, MODEL NUMBER AND SERIAL NUMBER MUST APPEAR ON EVERY PAGE
RETAIN ONE COPY OF THIS DATA SHEET FOR QA FILE

Sundstrand Advanced Technology Operations
unit of Sundstrand Corporation
4747 HARRISON AVENUE, ROCKFORD, IL 61101

TEST RECORD--CONTINUATION

PAGE NO. 72

TEST SPEC: 2538 REV. A

MODEL NO. ORC1A3A01 SERIAL NO. 002 DATE 3-22-78 DATA SHEET 56 OF 120

PROCEDURE PARAGRAPH NUMBER	PARAMETER DESCRIPTION	REQUIREMENT MINIMUM	REQUIREMENT MAXIMUM	UNITS	ACTUAL READING	
5.1.4.4	Load and Efficiency-Separately Excited-					
#4	TEST "A" (No Load)					
	1) Residual Voltage					
	T_1-T_2	---	---	VAC	4.9	
	T_1-T_3	---	---	VAC	4.9	
	T_3-T_2	---	---	VAC	4.9	
	2) Alternator Speed	33,400	34,000	RPM	33700	
	3) Torque	---	---	IN-LBS.	.55	
	4) Housing Pressure	21	---	In.Hg.	22.8	
	5) Winding Temperatures					
	TC_1	180	275	°F	206	A
	TC_2	180	275	°F	209	A
	TC_3	180	275	°F	207	A
	TC_4	180	275	°F	207	A
	6) Cooling Oil Flow	---	---	GPM	(252) .68	
	7) Cooling Oil Temperature	150	230	°F	195	
	8) Cooling Oil Out Temperature	---	---	°F	192	A

.... NOTE ....
TS, MODEL NUMBER AND SERIAL NUMBER MUST APPEAR ON EVERY PAGE
RETAIN ONE COPY OF THIS DATA SHEET FOR QA FILE

Sundstrand Advanced Technology Operations
unit of Sundstrand Corporation
4747 HARRISON AVENUE, ROCKFORD, IL 61101

TEST RECORD–CONTINUATION

PAGE NO. 73

TEST SPEC: 2538 REV. A

MODEL NO. ORC1A3A01 SERIAL NO. 002 DATE 3-22-78 DATA SHEET 57 OF 120

PROCEDURE PARAGRAPH NUMBER	PARAMETER DESCRIPTION	REQUIREMENT MINIMUM	REQUIREMENT MAXIMUM	UNITS	ACTUAL READING	
5.1.4.4	Load and Efficiency-Separately Excited-					
#4	TEST "B" (2200 Watts)					
	1) Three Phase Voltage					
	T_1-T_2	21.5	23.5	VAC	22.6	
	T_1-T_3	21.5	23.5	VAC	22.7	
	T_3-T_2	21.5	23.5	VAC	22.7	
	2) Three Phase Amps (AC)					
	Phase 1	52.0	61.0	Amps	56.6	
	Phase 2	52.0	61.0	Amps	56.6	
	Phase 3	52.0	61.0	Amps	56.7	
	3) Three Phase Watts (AC) W_1	---	---	Watts	1226	
	W_3	---	---	Watts	936	
	$W_1 + W_3$	2120	2280	Watts	2162	
	4) Field Voltage	---	---	VDC	11.4	
	5) Field Current	---	2.60	Amps	2.30	
	6) Alternator Speed	33,400	34,000	RPM	33700	
	7) Torque	---	---	IN.LBS.	6.50	
	8) Housing Pressure	21	---	In.Hg.	22.8	
	9) Winding Temperatures					
	TC_1	180	275	°F	212	A
	TC_2	180	275	°F	214	A
	TC_3	180	275	°F	213	A
	TC_4	180	275	°F	214	A
	10) Cooling Oil Flow	---	---	GPM	(266) .73	
	11) Cooling Oil Temperature	150	230	°F	201	
	12) Cooling Oil Out Temperature	---	---	°F	198	A

.... NOTE ....
TS, MODEL NUMBER AND SERIAL NUMBER MUST APPEAR ON EVERY PAGE
RETAIN ONE COPY OF THIS DATA SHEET FOR QA FILE

Sundstrand
Advanced Technology
Operations
unit of Sundstrand Corporation
4747 HARRISON AVENUE, ROCKFORD, IL 61101

TEST RECORD–CONTINUATION

TEST SPEC: 2538 REV. A

MODEL NO. ORC1A3A01 SERIAL NO. 002 DATE 3-22-78 DATA SHEET 58 OF 120

PROCEDURE PARAGRAPH NUMBER	PARAMETER DESCRIPTION	REQUIREMENT MINIMUM	REQUIREMENT MAXIMUM	UNITS	ACTUAL READING	
5.1.4.4	Load and Efficiency-Separately Excited-					
#5	TEST "A" (No Load)					
	1) Residual Voltage					
	T_1-T_2	---	---	VAC	4.8	
	T_1-T_3	---	---	VAC	4.8	
	T_3-T_2	---	---	VAC	4.8	
	2) Alternator Speed	33,400	34,000	RPM	33700	
	3) Torque	---	---	IN-LBS.	.45	
	4) Housing Pressure	21	---	In.Hg.	22.8	
	5) Winding Temperatures					
	TC_1	180	275	°F	200	A
	TC_2	180	275	°F	202	A
	TC_3	180	275	°F	200	A
	TC_4	180	275	°F	202	A
	6) Cooling Oil Flow	---	---	GPM	(254) .69	
	7) Cooling Oil Temperature	150	230	°F	194	
	8) Cooling Oil Out Temperature	---	---	°F	191	A

.... NOTE ....
TS, MODEL NUMBER AND SERIAL NUMBER MUST APPEAR ON EVERY PAGE
RETAIN ONE COPY OF THIS DATA SHEET FOR QA FILE

MODEL NO. ORC1A3A01 SERIAL NO. 002 DATE 3-22-78 DATA SHEET 59 OF 120

PROCEDURE PARAGRAPH NUMBER	PARAMETER DESCRIPTION	REQUIREMENT MINIMUM	REQUIREMENT MAXIMUM	UNITS	ACTUAL READING
5.1.4.4	Load and Efficiency-Separately Excited-				
#5	TEST "B" (2200 Watts)				
	1) Three Phase Voltage				
	T_1-T_2	21.5	23.5	VAC	22.8
	T_1-T_3	21.5	23.5	VAC	22.9
	T_3-T_2	21.5	23.5	VAC	22.8
	2) Three Phase Amps (AC)				
	Phase 1	52.0	61.0	Amps	56.9
	Phase 2	52.0	61.0	Amps	57.1
	Phase 3	52.0	61.0	Amps	57.1
	3) Three Phase Watts (AC) W_1	---	---	Watts	1228
	W_3	---	---	Watts	941
	$W_1 + W_3$	2120	2280	Watts	2169
	4) Field Voltage	---	---	VDC	11.4
	5) Field Current	---	2.60	Amps	2.30
	6) Alternator Speed	33,400	34,000	RPM	33700
	7) Torque	---	---	IN.LBS.	6.55
	8) Housing Pressure	21	---	In.Hg.	22.8
	9) Winding Temperatures				
	TC_1	180	275	°F	213 A
	TC_2	180	275	°F	215 A
	TC_3	180	275	°F	214 A
	TC_4	180	275	°F	215 A
	10) Cooling Oil Flow	---	---	GPM	(261) .71
	11) Cooling Oil Temperature	150	230	°F	195
	12) Cooling Oil Out Temperature	---	---	°F	193 A

.... NOTE ....
TS, MODEL NUMBER AND SERIAL NUMBER MUST APPEAR ON EVERY PAGE
RETAIN ONE COPY OF THIS DATA SHEET FOR QA FILE

Sundstrand
Advanced Technology
Operations
unit of Sundstrand Corporation
4747 HARRISON AVENUE, ROCKFORD, IL 61101

TEST RECORD—CONTINUATION

TEST SPEC: 2538 REV. A

MODEL NO. ORC1A3A01 SERIAL NO. 002 DATE 3-22-78 DATA SHEET 60 OF 120

PROCEDURE PARAGRAPH NUMBER	PARAMETER DESCRIPTION	REQUIREMENT MINIMUM	REQUIREMENT MAXIMUM	UNITS	ACTUAL READING	
5.1.4.4	Load and Efficiency-Separately Excited-					
#6	TEST "A" (No Load)					
	1) Residual Voltage					
	T_1-T_2	---	---	VAC	4.9	
	T_1-T_3	---	---	VAC	4.9	
	T_3-T_2	---	---	VAC	4.9	
	2) Alternator Speed	33,400	34,000	RPM	33700	
	3) Torque	---	---	IN-LBS.	.45	
	4) Housing Pressure	21	---	In.Hg.	22.8	
	5) Winding Temperatures					
	TC_1	180	275	°F	201	A
	TC_2	180	275	°F	204	A
	TC_3	180	275	°F	202	A
	TC_4	180	275	°F	203	A
	6) Cooling Oil Flow	---	---	GPM	(261) .71	
	7) Cooling Oil Temperature	150	230	°F	201	
	8) Cooling Oil Out Temperature	---	---	°F	197	A

.... NOTE ....

TS, MODEL NUMBER AND SERIAL NUMBER MUST APPEAR ON EVERY PAGE
RETAIN ONE COPY OF THIS DATA SHEET FOR QA FILE

Sundstrand
Advanced Technology
Operations
unit of Sundstrand Corporation
4747 HARRISON AVENUE, ROCKFORD, IL 61101

TEST RECORD–CONTINUATION

TEST SPEC: 2538 REV. A

MODEL NO. ORC1A3A01 SERIAL NO. 002 DATE 3-22-78 DATA SHEET 61 OF 120

TEST MAN: 1593

PROCEDURE PARAGRAPH NUMBER	PARAMETER DESCRIPTION	REQUIREMENT MINIMUM	REQUIREMENT MAXIMUM	UNITS	ACTUAL READING	
5.1.4.4	Load and Efficiency-Separately Excited-					
#6	TEST "B" (2200 Watts)					
	1) Three Phase Voltage					
	T_1-T_2	21.5	23.5	VAC	22.8	
	T_1-T_3	21.5	23.5	VAC	22.9	
	T_3-T_2	21.5	23.5	VAC	22.8	
	2) Three Phase Amps (AC)					
	Phase 1	52.0	61.0	Amps	56.8	
	Phase 2	52.0	61.0	Amps	57.0	
	Phase 3	52.0	61.0	Amps	57.0	
	3) Three Phase Watts (AC) W_1	---	---	Watts	1240	
	W_3	---	---	Watts	947	
	$W_1 + W_3$	2120	2280	Watts	2187	
	4) Field Voltage	---	---	VDC	11.3	
	5) Field Current	---	2.60	Amps	2.28	
	6) Alternator Speed	33,400	34,000	RPM	33700	
	7) Torque	---	---	IN.LBS.	652	
	8) Housing Pressure	21	---	In.Hg.	22.8	
	9) Winding Temperatures					
	TC_1	180	275	°F	207	A
	TC_2	180	275	°F	209	A
	TC_3	180	275	°F	207	A
	TC_4	180	275	°F	208	A
	10) Cooling Oil Flow	---	---	GPM	(250) .68	
	11) Cooling Oil Temperature	150	230	°F	215	
	12) Cooling Oil Out Temperature	---	---	°F	207	A

.... NOTE ....
TS, MODEL NUMBER AND SERIAL NUMBER MUST APPEAR ON EVERY PAGE
RETAIN ONE COPY OF THIS DATA SHEET FOR QA FILE

Sundstrand Advanced Technology Operations
unit of Sundstrand Corporation
4747 HARRISON AVENUE, ROCKFORD, IL 61101

TEST RECORD–CONTINUATION

PAGE NO. 78

TEST SPEC: 2538 REV. A

MODEL NO. ORC1A3A01 SERIAL NO. 002 DATE 3-22-78 DATA SHEET 62 OF 120

PROCEDURE PARAGRAPH NUMBER	PARAMETER DESCRIPTION	REQUIREMENT MINIMUM	REQUIREMENT MAXIMUM	UNITS	ACTUAL READING	
5.1.4.4	Load and Efficiency-Separately Excited-					
#7	TEST "A" (No Load)					
	1) Residual Voltage					
	T_1-T_2	---	---	VAC	4.9	
	T_1-T_3	---	---	VAC	4.9	
	T_3-T_2	---	---	VAC	4.9	
	2) Alternator Speed	33,400	34,000	RPM	33700	
	3) Torque	---	---	IN-LBS.	.48	
	4) Housing Pressure	21	---	In.Hg.	22.8	
	5) Winding Temperatures					
	TC_1	180	275	°F	203	A
	TC_2	180	275	°F	205	A
	TC_3	180	275	°F	203	A
	TC_4	180	275	°F	205	A
	6) Cooling Oil Flow	---	---	GPM	(252) .70	
	7) Cooling Oil Temperature	150	230	°F	200	
	8) Cooling Oil Out Temperature	---	---	°F	286	A

.... NOTE ....
TS, MODEL NUMBER AND SERIAL NUMBER MUST APPEAR ON EVERY PAGE
RETAIN ONE COPY OF THIS DATA SHEET FOR QA FILE

Sundstrand Advanced Technology Operations
unit of Sundstrand Corporation
4747 HARRISON AVENUE, ROCKFORD, IL 61101

TEST RECORD—CONTINUATION

PAGE NO. 79

TEST SPEC: 2538 REV. A

MODEL NO. ORC1A3A01 SERIAL NO. 002 DATE 3-22-78 DATA SHEET 63 OF 120

PROCEDURE PARAGRAPH NUMBER	PARAMETER DESCRIPTION	REQUIREMENT MINIMUM	REQUIREMENT MAXIMUM	UNITS	ACTUAL READING	
5.1.4.4	Load and Efficiency-Separately Excited-					
#7	TEST "B" (2200 Watts)					
	1) Three Phase Voltage					
	T_1-T_2	21.5	23.5	VAC	22.9	
	T_1-T_3	21.5	23.5	VAC	22.9	
	T_3-T_2	21.5	23.5	VAC	22.9	
	2) Three Phase Amps (AC)					
	Phase 1	52.0	61.0	Amps	57.2	
	Phase 2	52.0	61.0	Amps	57.4	
	Phase 3	52.0	61.0	Amps	57.5	
	3) Three Phase Watts (AC) W_1	---	---	Watts	1253	
	W_3	---	---	Watts	954	
	$W_1 + W_3$	2120	2280	Watts	2207	
	4) Field Voltage	---	---	VDC	10.9	
	5) Field Current	---	2.60	Amps	2.22	
	6) Alternator Speed	33,400	34,000	RPM	33700	
	7) Torque	---	---	IN.LBS.	6.57	
	8) Housing Pressure	21	---	In.Hg.	22.8	
	9) Winding Temperatures					
	TC_1	180	275	°F	205	A
	TC_2	180	275	°F	208	A
	TC_3	180	275	°F	206	A
	TC_4	180	275	°F	207	A
	10) Cooling Oil Flow	---	---	GPM	(255) .69	
	11) Cooling Oil Temperature	150	230	°F	217	
	12) Cooling Oil Out Temperature	---	---	°F	207	A

.... NOTE ....
TS, MODEL NUMBER AND SERIAL NUMBER MUST APPEAR ON EVERY PAGE
RETAIN ONE COPY OF THIS DATA SHEET FOR QA FILE

Sundstrand Advanced Technology Operations
unit of Sundstrand Corporation
4747 HARRISON AVENUE, ROCKFORD, IL 61101

TEST RECORD–CONTINUATION

PAGE NO. 80

TEST SPEC: 2538 REV. A

MODEL NO. ORC1A3A01 SERIAL NO. 002 DATE 3-22-78 DATA SHEET 64 OF 120

PROCEDURE PARAGRAPH NUMBER	PARAMETER DESCRIPTION	REQUIREMENT MINIMUM	REQUIREMENT MAXIMUM	UNITS	ACTUAL READING	
5.1.5.1	Load and Efficiency- With Controller					
#1	TEST "A" (No Load)					
	1) Residual Voltage					
	T_1-T_2	---	---	VAC	5.2	
	T_1-T_3	---	---	VAC	5.2	
	T_3-T_2	---	---	VAC	5.2	
	2) Alternator Speed	33,400	34,000	RPM	33700	
	3) Torque	---	---	IN-LBS.	.50	
	4) Housing Pressure	21	---	In.Hg.	22.8	
	5) Winding Temperatures					
	TC_1	180	275	°F	187	A
	TC_2	180	275	°F	180	A
	TC_3	180	275	°F	187	A
	TC_4	180	275	°F	189	A
	6) Cooling Oil Flow	---	---	GPM	(260) .71	
	7) Cooling Oil Temperature	150	230	°F	197	
	8) Cooling Oil Out Temperature	---	---	°F	191	A

.... NOTE ....
TS, MODEL NUMBER AND SERIAL NUMBER MUST APPEAR ON EVERY PAGE
RETAIN ONE COPY OF THIS DATA SHEET FOR QA FILE

Sundstrand
Advanced Technology
Operations
unit of Sundstrand Corporation
4747 HARRISON AVENUE, ROCKFORD, IL 61101

TEST RECORD–CONTINUATION

TEST SPEC: 2538 REV. A

MODEL NO. ORC1A3A01 SERIAL NO. 002 DATE 3-22-78 DATA SHEET 65 OF 120

PROCEDURE PARAGRAPH NUMBER	PARAMETER DESCRIPTION	REQUIREMENT MINIMUM	REQUIREMENT MAXIMUM	UNITS	ACTUAL READING	
5.1.5.1	Load and Efficiency- With Controller		--			
#1	TEST "B" (1300 Watts)					
	1) Three Phase Voltage					
	T_1-T_2	---	---	VAC	23.1	
	T_1-T_3	---	---	VAC	23.1	
	T_3-T_2	---	---	VAC	23.2	
	2) Three Phase Amps (AC)					
	Phase 1	---	---	Amps	41.9	
	Phase 2	---	---	Amps	42.1	
	Phase 3	---	---	Amps	42.0	
	3) Three Phase Watts (AC)					
	W_1	---	---	Watts	654	
	W_3	---	---	Watts	946	
	4) Field Voltage	---	---	VDC	6.5	
	5) Field Current	---	1.60	Amps	1.38	A
	6) Alternator Speed	33,400	34,000	RPM	33700	
	7) Torque	---	---	IN.LBS.	488	
	8) Housing Pressure	21	---	In.Hg.	22.8	
	9) Winding Temperatures					
	TC_1	180	275	°F	195	A
	TC_2	180	275	°F	199	A
	TC_3	180	275	°F	197	A
	TC_4	180	275	°F	198	A
	10) Cooling Oil Flow	---	---	GPM	(253) .69	
	11) Cooling Oil Temperature	150	230	°F	201	
	12) DC Volts	27.5	28.5	Volts	28.0	
	13) DC Amps	45.5	47.5	Amps	46.3	
	14) Cooling Oil Out Temperature	---	---	°F	196	A

.... NOTE ....
TS, MODEL NUMBER AND SERIAL NUMBER MUST APPEAR ON EVERY PAGE
RETAIN ONE COPY OF THIS DATA SHEET FOR QA FILE

Sundstrand
Advanced Technology
Operations
unit of Sundstrand Corporation
4747 HARRISON AVENUE, ROCKFORD, IL 61101

TEST RECORD–CONTINUATION

TEST SPEC: 2538 REV. A

MODEL NO. ORC1A3A01 SERIAL NO. 002 DATE 3-22-78 DATA SHEET 66 OF 120

PROCEDURE PARAGRAPH NUMBER	PARAMETER DESCRIPTION	REQUIREMENT MINIMUM	REQUIREMENT MAXIMUM	UNITS	ACTUAL READING	
5.1.5.1	Load and Efficiency- With Controller					
#2	TEST "A" (No Load)					
	1) Residual Voltage					
	T_1-T_2	---	---	VAC	5.2	
	T_1-T_3	---	---	VAC	5.2	
	T_3-T_2	---	---	VAC	5.2	
	2) Alternator Speed	33,400	34,000	RPM	33700	
	3) Torque	---	---	IN-LBS.	.66	
	4) Housing Pressure	21	---	In.Hg.	22.8	
	5) Winding Temperatures					
	TC_1	180	275	°F	197	A
	TC_2	180	275	°F	200	A
	TC_3	180	275	°F	198	A
	TC_4	180	275	°F	199	A
	6) Cooling Oil Flow	---	---	GPM	(251) .68	
	7) Cooling Oil Temperature	150	230	°F	197	
	8) Cooling Oil Out Temperature	---	---	°F	193	A

.... NOTE ....
TS, MODEL NUMBER AND SERIAL NUMBER MUST APPEAR ON EVERY PAGE
RETAIN ONE COPY OF THIS DATA SHEET FOR QA FILE

Sundstrand Advanced Technology Operations
unit of Sundstrand Corporation
4747 HARRISON AVENUE, ROCKFORD, IL 61101

TEST RECORD–CONTINUATION

PAGE NO. 83

TEST SPEC: 2538 REV. A

MODEL NO. ORC1A3A01 SERIAL NO. 002 DATE 3-22-78 DATA SHEET 67 OF 120

PROCEDURE PARAGRAPH NUMBER	PARAMETER DESCRIPTION	REQUIREMENT MINIMUM	REQUIREMENT MAXIMUM	UNITS	ACTUAL READING	
5.1.5.1	Load and Efficiency- With Controller		--			
#2	TEST "B" (1300 Watts)					
	1) Three Phase Voltage					
	T_1-T_2	---	---	VAC	23.1	
	T_1-T_3	---	---	VAC	23.1	
	T_3-T_2	---	---	VAC	23.2	
	2) Three Phase Amps (AC)					
	Phase 1	---	---	Amps	41.9	
	Phase 2	---	---	Amps	42.0	
	Phase 3	---	---	Amps	41.9	
	3) Three Phase Watts (AC)					
	W_1	---	---	Watts	653	
	W_3	---	---	Watts	948	
	4) Field Voltage	---	---	VDC	6.6	
	5) Field Current	---	1.60	Amps	1.38	A
	6) Alternator Speed	33,400	34,000	RPM	33700	
	7) Torque	---	---	IN.LBS.	5.0	
	8) Housing Pressure	21	---	In.Hg.	22.8	
	9) Winding Temperatures					
	TC_1	180	275	°F	202	A
	TC_2	180	275	°F	206	A
	TC_3	180	275	°F	204	A
	TC_4	180	275	°F	205	A
	10) Cooling Oil Flow	---	---	GPM	(265) .72	
	11) Cooling Oil Temperature	150	230	°F	199	
	12) DC Volts	27.5	28.5	Volts	27.9	
	13) DC Amps	45.5	47.5	Amps	46.2	
	14) Cooling Oil Out Temperature	---	---	°F	195	A

.... NOTE ....
TS, MODEL NUMBER AND SERIAL NUMBER MUST APPEAR ON EVERY PAGE
RETAIN ONE COPY OF THIS DATA SHEET FOR QA FILE

Sundstrand
Advanced Technology
Operations
unit of Sundstrand Corporation
4747 HARRISON AVENUE, ROCKFORD, IL 61101

TEST RECORD—CONTINUATION

TEST SPEC: 2538 REV. A

MODEL NO. ORC1A3A01 SERIAL NO. 002 DATE 3-22-78 DATA SHEET 68 OF 120

PROCEDURE PARAGRAPH NUMBER	PARAMETER DESCRIPTION	REQUIREMENT MINIMUM	REQUIREMENT MAXIMUM	UNITS	ACTUAL READING	
5.1.5.1	Load and Efficiency- With Controller					
#3	TEST "A" (No Load)					
	1) Residual Voltage					
	T_1-T_2	---	---	VAC	5.7	
	T_1-T_3	---	---	VAC	5.6	
	T_3-T_2	---	---	VAC	5.6	
	2) Alternator Speed	33,400	34,000	RPM	33700	
	3) Torque	---	---	IN-LBS.	.69	
	4) Housing Pressure	21	---	In.Hg.	22.8	
	5) Winding Temperatures					
	TC_1	180	275	°F	201	A
	TC_2	180	275	°F	205	A
	TC_3	180	275	°F	203	A
	TC_4	180	275	°F	203	A
	6) Cooling Oil Flow	---	---	GPM	(248) .68	
	7) Cooling Oil Temperature	150	230	°F	195	
	8) Cooling Oil Out Temperature	---	---	°F	191	A

.... NOTE ....

TS, MODEL NUMBER AND SERIAL NUMBER MUST APPEAR ON EVERY PAGE
RETAIN ONE COPY OF THIS DATA SHEET FOR QA FILE

Sundstrand Advanced Technology Operations
unit of Sundstrand Corporation
4747 HARRISON AVENUE, ROCKFORD, IL 61101

TEST RECORD–CONTINUATION

PAGE NO. 85

TEST SPEC: 2538 REV. A

MODEL NO. ORC1A3A01 SERIAL NO. 002 DATE 3-22-78 DATA SHEET 69 OF 120

PROCEDURE PARAGRAPH NUMBER	PARAMETER DESCRIPTION	REQUIREMENT MINIMUM	REQUIREMENT MAXIMUM	UNITS	ACTUAL READING	
5.1.5.1	Load and Efficiency- With Controller					
#3	TEST "B" (1300 Watts)					
	1) Three Phase Voltage					
	T_1-T_2	---	---	VAC	23.1	
	T_1-T_3	---	---	VAC	23.1	
	T_3-T_2	---	---	VAC	23.1	
	2) Three Phase Amps (AC)					
	Phase 1	---	---	Amps	42.0	
	Phase 2	---	---	Amps	42.1	
	Phase 3	---	---	Amps	42.0	
	3) Three Phase Watts (AC)					
	W_1	---	---	Watts	652	
	W_3	---	---	Watts	944	
	4) Field Voltage	---	---	VDC	6.6	
	5) Field Current	---	1.60	Amps	1.38	A
	6) Alternator Speed	33,400	34,000	RPM	33700	
	7) Torque	---	---	IN.LBS.	5.0	
	8) Housing Pressure	21	---	In.Hg.	22.8	
	9) Winding Temperatures					
	TC_1	180	275	°F	204	A
	TC_2	180	275	°F	208	A
	TC_3	180	275	°F	206	A
	TC_4	180	275	°F	207	A
	10) Cooling Oil Flow	---	---	GPM	(258) .70	
	11) Cooling Oil Temperature	150	230	°F	202	
	12) DC Volts	27.5	28.5	Volts	28.0	
	13) DC Amps	45.5	47.5	Amps	46.3	
	14) Cooling Oil Out Temperature	---	---	°F	189	A

.... NOTE ....
TS, MODEL NUMBER AND SERIAL NUMBER MUST APPEAR ON EVERY PAGE
RETAIN ONE COPY OF THIS DATA SHEET FOR QA FILE

MODEL NO. ORC1A3A01 SERIAL NO. 002 DATE 3-22-78 DATA SHEET 70 OF 120

PROCEDURE PARAGRAPH NUMBER	PARAMETER DESCRIPTION	REQUIREMENT MINIMUM	REQUIREMENT MAXIMUM	UNITS	ACTUAL READING	
5.1.5.1	Load and Efficiency- With Controller					
#4	TEST "A" (No Load)					
	1) Residual Voltage					
	T_1-T_2	---	---	VAC	5.8	
	T_1-T_3	---	---	VAC	5.8	
	T_3-T_2	---	---	VAC	5.8	
	2) Alternator Speed	33,400	34,000	RPM	33700	
	3) Torque	---	---	IN-LBS.	.70	
	4) Housing Pressure	21	---	In.Hg.	22.8	
	5) Winding Temperatures					
	TC_1	180	275	°F	201	A
	TC_2	180	275	°F	205	A
	TC_3	180	275	°F	203	A
	TC_4	180	275	°F	203	A
	6) Cooling Oil Flow	---	---	GPM	(252) .68	
	7) Cooling Oil Temperature	150	230	°F	205	
	8) Cooling Oil Out Temperature	---	---	°F	198	A

.... NOTE ....
TS, MODEL NUMBER AND SERIAL NUMBER MUST APPEAR ON EVERY PAGE
RETAIN ONE COPY OF THIS DATA SHEET FOR QA FILE

Sundstrand Advanced Technology Operations
unit of Sundstrand Corporation
4747 HARRISON AVENUE, ROCKFORD, IL 61101

TEST RECORD–CONTINUATION

PAGE NO. 87

TEST SPEC: 2538 REV. A

MODEL NO. ORC1A3A01 SERIAL NO. 002 DATE 3-22-78 DATA SHEET 71 OF 120

PROCEDURE PARAGRAPH NUMBER	PARAMETER DESCRIPTION	REQUIREMENT MINIMUM	REQUIREMENT MAXIMUM	UNITS	ACTUAL READING	
5.1.5.1	Load and Efficiency- With Controller		--			
#4	TEST "B" (1300 Watts)					
	1) Three Phase Voltage					
	T_1-T_2	---	---	VAC	23.1	
	T_1-T_3	---	---	VAC	23.1	
	T_3-T_2	---	---	VAC	23.1	
	2) Three Phase Amps (AC)					
	Phase 1	---	---	Amps	42.0	
	Phase 2	---	---	Amps	42.1	
	Phase 3	---	---	Amps	42.0	
	3) Three Phase Watts (AC)					
	W_1	---	---	Watts	650	
	W_3	---	---	Watts	939	
	4) Field Voltage	---	1.60	VDC	6.7	A
	5) Field Current	---	---	Amps	1.39	
	6) Alternator Speed	33,400	34,000	RPM	33700	
	7) Torque	---	---	IN.LBS.	4.95	
	8) Housing Pressure	21	---	In.Hg.	22.8	
	9) Winding Temperatures					
	TC_1	180	275	°F	205	A
	TC_2	180	275	°F	209	A
	TC_3	180	275	°F	207	A
	TC_4	180	275	°F	208	A
	10) Cooling Oil Flow	---	---	GPM	(260) .71	
	11) Cooling Oil Temperature	150	230	°F	199	
	12) DC Volts	27.5	28.5	Volts	28.0	
	13) DC Amps	45.5	47.5	Amps	46.4	
	14) Cooling Oil Out Temperature	---	---	°F	195	A

.... NOTE ....
TS, MODEL NUMBER AND SERIAL NUMBER MUST APPEAR ON EVERY PAGE
RETAIN ONE COPY OF THIS DATA SHEET FOR QA FILE

Sundstrand Advanced Technology Operations
unit of Sundstrand Corporation
4747 HARRISON AVENUE, ROCKFORD, IL 61101

TEST RECORD–CONTINUATION

PAGE NO. 88

TEST SPEC: 2538 REV. A

MODEL NO. ORC1A3A01 SERIAL NO. 002 DATE 3-22-78 DATA SHEET 72 OF 120

PROCEDURE PARAGRAPH NUMBER	PARAMETER DESCRIPTION	REQUIREMENT MINIMUM	REQUIREMENT MAXIMUM	UNITS	ACTUAL READING	
5.1.5.1	Load and Efficiency- With Controller					
#5	TEST "A" (No Load)					
	1) Residual Voltage					
	T_1-T_2	---	---	VAC	5.7	
	T_1-T_3	---	---	VAC	5.7	
	T_3-T_2	---	---	VAC	5.7	
	2) Alternator Speed	33,400	34,000	RPM	33700	
	3) Torque	---	---	IN-LBS.	.68	
	4) Housing Pressure	21	---	In.Hg.	22.8	
	5) Winding Temperatures					
	TC_1	180	275	°F	204	A
	TC_2	180	275	°F	208	A
	TC_3	180	275	°F	205	A
	TC_4	180	275	°F	206	A
	6) Cooling Oil Flow	---	---	GPM	(251) .68	
	7) Cooling Oil Temperature	150	230	°F	195	
	8) Cooling Oil Out Temperature	---	---	°F	192	A

.... NOTE ....
TS, MODEL NUMBER AND SERIAL NUMBER MUST APPEAR ON EVERY PAGE
RETAIN ONE COPY OF THIS DATA SHEET FOR QA FILE

Sundstrand Advanced Technology Operations
unit of Sundstrand Corporation
4747 HARRISON AVENUE, ROCKFORD, IL 61101

TEST RECORD–CONTINUATION

PAGE NO. 89

TEST SPEC: 2538 REV. A

MODEL NO. ORC1A3A01 SERIAL NO. 002 DATE 3-22-78 DATA SHEET 73 OF 120

PROCEDURE PARAGRAPH NUMBER	PARAMETER DESCRIPTION	REQUIREMENT MINIMUM	REQUIREMENT MAXIMUM	UNITS	ACTUAL READING	
5.1.5.1	Load and Efficiency- With Controller					
#5	TEST "B" (1300 Watts)					
	1) Three Phase Voltage					
	T_1-T_2	---	---	VAC	23.1	
	T_1-T_3	---	---	VAC	23.1	
	T_3-T_2	---	---	VAC	23.2	
	2) Three Phase Amps (AC)					
	Phase 1	---	---	Amps	42.0	
	Phase 2	---	---	Amps	42.1	
	Phase 3	---	---	Amps	42.0	
	3) Three Phase Watts (AC)					
	W_1	---	---	Watts	651	
	W_3	---	---	Watts	943	
	4) Field Voltage	---	---	VDC	6.7	
	5) Field Current	---	1.60	Amps	1.39	A
	6) Alternator Speed	33,400	34,000	RPM	33700	
	7) Torque	---	---	IN.LBS.	4.96	
	8) Housing Pressure	21	---	In.Hg.	22.8	
	9) Winding Temperatures					
	TC_1	180	275	°F	206	A
	TC_2	180	275	°F	210	A
	TC_3	180	275	°F	208	A
	TC_4	180	275	°F	208	A
	10) Cooling Oil Flow	---	---	GPM	(267) .73	
	11) Cooling Oil Temperature	150	230	°F	200	
	12) DC Volts	27.5	28.5	Volts	27.9	
	13) DC Amps	45.5	47.5	Amps	46.2	
	14) Cooling Oil Out Temperature	---	---	°F	196	A

.... NOTE ....
TS, MODEL NUMBER AND SERIAL NUMBER MUST APPEAR ON EVERY PAGE
RETAIN ONE COPY OF THIS DATA SHEET FOR QA FILE

Sundstrand Advanced Technology Operations
unit of Sundstrand Corporation
4747 HARRISON AVENUE, ROCKFORD, IL 61101

TEST RECORD–CONTINUATION

PAGE NO. 90

TEST SPEC: 2538 REV. A

MODEL NO. ORC1A3A01 SERIAL NO. 002 DATE 3-22-78 DATA SHEET 74 OF 120

PROCEDURE PARAGRAPH NUMBER	PARAMETER DESCRIPTION	REQUIREMENT MINIMUM	REQUIREMENT MAXIMUM	UNITS	ACTUAL READING	
5.1.5.1	Load and Efficiency- With Controller					
#6	TEST "A" (No Load)					
	1) Residual Voltage					
	T_1-T_2	---	---	VAC	5.8	
	T_1-T_3	---	---	VAC	5.8	
	T_3-T_2	---	---	VAC	5.8	
	2) Alternator Speed	33,400	34,000	RPM	33700	
	3) Torque	---	---	IN-LBS.	.68	
	4) Housing Pressure	21	---	In.Hg.	22.8	
	5) Winding Temperatures					
	TC_1	180	275	°F	206	A
	TC_2	180	275	°F	209	A
	TC_3	180	275	°F	207	A
	TC_4	180	275	°F	207	A
	6) Cooling Oil Flow	---	---	GPM	(251) .68	
	7) Cooling Oil Temperature	150	230	°F	196	
	8) Cooling Oil Out Temperature	---	---	°F	193	A

.... NOTE ....
TS, MODEL NUMBER AND SERIAL NUMBER MUST APPEAR ON EVERY PAGE
RETAIN ONE COPY OF THIS DATA SHEET FOR QA FILE

Sundstrand Advanced Technology Operations
unit of Sundstrand Corporation
4747 HARRISON AVENUE, ROCKFORD, IL 61101

TEST RECORD–CONTINUATION

PAGE NO. 91

TEST SPEC: 2538 REV. A

MODEL NO. ORC1A3A01 SERIAL NO. 002 DATE 3-22-78 DATA SHEET 75 OF 120

PROCEDURE PARAGRAPH NUMBER	PARAMETER DESCRIPTION	REQUIREMENT MINIMUM	REQUIREMENT MAXIMUM	UNITS	ACTUAL READING	
5.1.5.1	Load and Efficiency- With Controller					
#6	TEST "B" (1300 Watts)					
	1) Three Phase Voltage					
	T_1-T_2	---	---	VAC	23.1	
	T_1-T_3	---	---	VAC	23.1	
	T_3-T_2	---	---	VAC	23.2	
	2) Three Phase Amps (AC)					
	Phase 1	---	---	Amps	42.0	
	Phase 2	---	---	Amps	42.1	
	Phase 3	---	---	Amps	42.0	
	3) Three Phase Watts (AC)					
	W_1	---	---	Watts	654	
	W_3	---	---	Watts	944	
	4) Field Voltage	---	---	VDC	6.7	
	5) Field Current	---	1.60	Amps	1.40	A
	6) Alternator Speed	33,400	34,000	RPM	33700	
	7) Torque	---	---	IN.LBS.	4.95	
	8) Housing Pressure	21	---	In.Hg.	22.8	
	9) Winding Temperatures					
	TC_1	180	275	°F	205	A
	TC_2	180	275	°F	210	A
	TC_3	180	275	°F	207	A
	TC_4	180	275	°F	208	A
	10) Cooling Oil Flow	---	---	GPM	(265) .72	
	11) Cooling Oil Temperature	150	230	°F	201	
	12) DC Volts	27.5	28.5	Volts	27.9	
	13) DC Amps	45.5	47.5	Amps	46.2	
	14) Cooling Oil Out Temperature	---	---	°F	198	A

.... NOTE ....
TS, MODEL NUMBER AND SERIAL NUMBER MUST APPEAR ON EVERY PAGE
RETAIN ONE COPY OF THIS DATA SHEET FOR QA FILE

Sundstrand Advanced Technology Operations
unit of Sundstrand Corporation
4747 HARRISON AVENUE, ROCKFORD, IL 61101

TEST RECORD–CONTINUATION

PAGE NO. 92

TEST SPEC: 2538 REV. A

MODEL NO. ORC1A3A01 SERIAL NO. 002 DATE 3-22-78 DATA SHEET 76 OF 120

PROCEDURE PARAGRAPH NUMBER	PARAMETER DESCRIPTION	REQUIREMENT MINIMUM	REQUIREMENT MAXIMUM	UNITS	ACTUAL READING	
5.1.5.1	Load and Efficiency- With Controller					
#7	TEST "A" (No Load)					
	1) Residual Voltage					
	T_1-T_2	---	---	VAC	5.8	
	T_1-T_3	---	---	VAC	5.8	
	T_3-T_2	---	---	VAC	5.8	
	2) Alternator Speed	33,400	34,000	RPM	33700	
	3) Torque	---	---	IN-LBS.	.69	
	4) Housing Pressure	21	---	In.Hg.	22.8	
	5) Winding Temperatures					
	TC_1	180	275	°F	205	A
	TC_2	180	275	°F	209	A
	TC_3	180	275	°F	206	A
	TC_4	180	275	°F	207	A
	6) Cooling Oil Flow	---	---	GPM	(254) .69	
	7) Cooling Oil Temperature	150	230	°F	198	
	8) Cooling Oil Out Temperature	---	---	°F	185	A

.... NOTE ....
TS, MODEL NUMBER AND SERIAL NUMBER MUST APPEAR ON EVERY PAGE
RETAIN ONE COPY OF THIS DATA SHEET FOR QA FILE

Sundstrand Advanced Technology Operations
unit of Sundstrand Corporation
4747 HARRISON AVENUE, ROCKFORD, IL 61101

TEST RECORD–CONTINUATION

PAGE NO. 93

TEST SPEC: 2538 REV. A

MODEL NO. ORC1A3A01 SERIAL NO. 002 DATE 3-22-78 DATA SHEET 77 OF 120

PROCEDURE PARAGRAPH NUMBER	PARAMETER DESCRIPTION	REQUIREMENT MINIMUM	REQUIREMENT MAXIMUM	UNITS	ACTUAL READING	
5.1.5.1	Load and Efficiency- With Controller		--			
#7	TEST "B" (1300 Watts)					
	1) Three Phase Voltage					
	T_1-T_2	---	---	VAC	23.1	
	T_1-T_3	---	---	VAC	23.1	
	T_3-T_2	---	---	VAC	23.2	
	2) Three Phase Amps (AC)					
	Phase 1	---	---	Amps	42.0	
	Phase 2	---	---	Amps	42.2	
	Phase 3	---	---	Amps	42.1	
	3) Three Phase Watts (AC)					
	W_1	---	---	Watts	653	
	W_3	---	---	Watts	944	
	4) Field Voltage	---	---	VDC	6.7	
	5) Field Current	---	1.60	Amps	1.39	A
	6) Alternator Speed	33,400	34,000	RPM	33700	
	7) Torque	---	---	IN.LBS.	4.95	
	8) Housing Pressure	21	---	In.Hg.	22.8	
	9) Winding Temperatures					
	TC_1	180	275	°F	207	A
	TC_2	180	275	°F	210	A
	TC_3	180	275	°F	208	A
	TC_4	180	275	°F	209	A
	10) Cooling Oil Flow	---	---	GPM	(250) .68	
	11) Cooling Oil Temperature	150	230	°F	211	
	12) DC Volts	27.5	28.5	Volts	28.0	
	13) DC Amps	45.5	47.5	Amps	46.3	
	14) Cooling Oil Out Temperature	---	---	°F	206	A

.... NOTE ....
TS, MODEL NUMBER AND SERIAL NUMBER MUST APPEAR ON EVERY PAGE
RETAIN ONE COPY OF THIS DATA SHEET FOR QA FILE

Sundstrand Advanced Technology Operations
unit of Sundstrand Corporation
4747 HARRISON AVENUE, ROCKFORD, IL 61101

TEST RECORD–CONTINUATION

PAGE NO. 94

TEST SPEC: 2538 REV. A

MODEL NO. ORC1A3A01 SERIAL NO. 002 DATE 3-23-78 DATA SHEET 78 OF 120

TEST MAN: 4931

PROCEDURE PARAGRAPH NUMBER	PARAMETER DESCRIPTION	REQUIREMENT MINIMUM	REQUIREMENT MAXIMUM	UNITS	ACTUAL READING	
5.1.5.2	Load and Efficiency- With Controller					
#1	TEST "A" (No Load)					
	1) Residual Voltage					
	T_1-T_2	---	---	VAC	5.7	
	T_1-T_3	---	---	VAC	5.7	
	T_3-T_2	---	---	VAC	5.7	
	2) Alternator Speed	33,400	34,000	RPM	33700	
	3) Torque	---	---	IN-LBS.	.51	
	4) Housing Pressure	21	---	In.Hg.	23.2	
	5) Winding Temperatures					
	TC_1	180	275	°F	188	A
	TC_2	180	275	°F	191	A
	TC_3	180	275	°F	189	A
	TC_4	180	275	°F	190	A
	6) Cooling Oil Flow	---	---	GPM	(256) .70	
	7) Cooling Oil Temperature	150	230	°F	194	
	8) Cooling Oil Out Temperature	---	---	°F	190	A

.... NOTE ....
TS, MODEL NUMBER AND SERIAL NUMBER MUST APPEAR ON EVERY PAGE
RETAIN ONE COPY OF THIS DATA SHEET FOR QA FILE

Sundstrand Advanced Technology Operations
unit of Sundstrand Corporation
4747 HARRISON AVENUE, ROCKFORD, IL 61101

TEST RECORD–CONTINUATION

PAGE NO. 95

TEST SPEC: 2538 REV. A

MODEL NO. ORC1A3A01 SERIAL NO. 002 DATE 3-23-78 DATA SHEET 79 OF 120

PROCEDURE PARAGRAPH NUMBER	PARAMETER DESCRIPTION	REQUIREMENT MINIMUM	REQUIREMENT MAXIMUM	UNITS	ACTUAL READING	
5.1.5.2	Load and Efficiency- With Controller					
#1	TEST "B" (500 Watts)					
	1) Three Phase Voltage					
	T_1-T_2	---	---	VAC	21.2	
	T_1-T_3	---	---	VAC	21.1	
	T_3-T_2	---	---	VAC	21.2	
	2) Three Phase Amps (AC)					
	Phase 1	---	---	Amps	22.1	
	Phase 2	---	---	Amps	22.1	
	Phase 3	---	---	Amps	22.0	
	3) Three Phase Watts (AC)					
	W_1	---	---	Watts	133	
	W_3	---	---	Watts	454	
	4) Field Voltage	---	---	VDC	2.4	
	5) Field Current	---	0.7	Amps	.50	A
	6) Alternator Speed	33,400	34,000	RPM	33700	
	7) Torque	---	---	IN.LBS.	2.05	
	8) Housing Pressure	21	---	In.Hg.	23.2	
	9) Winding Temperatures					
	TC_1	180	275	°F	195	A
	TC_2	180	275	°F	198	A
	TC_3	180	275	°F	196	A
	TC_4	180	275	°F	197	A
	10) Cooling Oil Flow	---	---	GPM	(251) .68	
	11) Cooling Oil Temperature	150	230	°F	194	
	12) DC Volts	27.5	28.5	Volts	28.0	
	13) DC Amps	17.3	18.5	Amps	18.0	
	14) Cooling Oil Out Temperature	---	---	°F	190	A

.... NOTE ....
TS, MODEL NUMBER AND SERIAL NUMBER MUST APPEAR ON EVERY PAGE
RETAIN ONE COPY OF THIS DATA SHEET FOR QA FILE

Sundstrand Advanced Technology Operations
unit of Sundstrand Corporation
4747 HARRISON AVENUE, ROCKFORD, IL 61101

TEST RECORD–CONTINUATION

PAGE NO. 96

TEST SPEC: 2538 REV. A

MODEL NO. ORC1A3A01 SERIAL NO. 002 DATE 3-23-78 DATA SHEET 80 OF 120

PROCEDURE PARAGRAPH NUMBER	PARAMETER DESCRIPTION	REQUIREMENT MINIMUM	REQUIREMENT MAXIMUM	UNITS	ACTUAL READING	
5.1.5.2	Load and Efficiency- With Controller					
#2	TEST "A" (No Load)					
	1) Residual Voltage					
	T_1-T_2	---	---	VAC	5.7	
	T_1-T_3	---	---	VAC	5.7	
	T_3-T_2	---	---	VAC	5.7	
	2) Alternator Speed	33,400	34,000	RPM	33700	
	3) Torque	---	---	IN-LBS.	.42	
	4) Housing Pressure	21	---	In.Hg.	23.2	
	5) Winding Temperatures					
	TC_1	180	275	°F	192	A
	TC_2	180	275	°F	196	A
	TC_3	180	275	°F	193	A
	TC_4	180	275	°F	195	A
	6) Cooling Oil Flow	---	---	GPM	(262) .71	
	7) Cooling Oil Temperature	150	230	°F	203	
	8) Cooling Oil Out Temperature	---	---	°F	195	A

.... NOTE ....
TS, MODEL NUMBER AND SERIAL NUMBER MUST APPEAR ON EVERY PAGE
RETAIN ONE COPY OF THIS DATA SHEET FOR QA FILE

Sundstrand Advanced Technology Operations
unit of Sundstrand Corporation
4747 HARRISON AVENUE, ROCKFORD, IL 61101

TEST RECORD–CONTINUATION

PAGE NO. 97

TEST SPEC: 2538 REV A

MODEL NO. ORC1A3A01 SERIAL NO. 002 DATE 3-23-78 DATA SHEET 81 OF 120

PROCEDURE PARAGRAPH NUMBER	PARAMETER DESCRIPTION	REQUIREMENT MINIMUM	REQUIREMENT MAXIMUM	UNITS	ACTUAL READING	
5.1.5.2	Load and Efficiency- With Controller		--			
#2	TEST "B" (500 Watts)					
	1) Three Phase Voltage					
	T_1-T_2	---	---	VAC	21.3	
	T_1-T_3	---	---	VAC	21.2	
	T_3-T_2	---	---	VAC	21.2	
	2) Three Phase Amps (AC)					
	Phase 1	---	---	Amps	22.2	
	Phase 2	---	---	Amps	22.2	
	Phase 3	---	---	Amps	22.2	
	3) Three Phase Watts (AC)					
	W_1	---	---	Watts	135	
	W_3	---	---	Watts	458	
	4) Field Voltage	---	---	VDC	2.3	
	5) Field Current	---	0.7	Amps	.48	A
	6) Alternator Speed	33,400	34,000	RPM	33700	
	7) Torque	---	---	IN.LBS.	2.08	
	8) Housing Pressure	21	---	In.Hg.	23.2	
	9) Winding Temperatures					
	TC_1	180	275	°F	194	A
	TC_2	180	275	°F	197	A
	TC_3	180	275	°F	195	A
	TC_4	180	275	°F	196	A
	10) Cooling Oil Flow	---	---	GPM	(246) .67	
	11) Cooling Oil Temperature	150	230	°F	211	
	12) DC Volts	27.5	28.5	Volts	28.2	
	13) DC Amps	17.3	18.5	Amps	18.1	
	14) Cooling Oil Out Temperature	---	---	°F	201	A

.... NOTE ....
TS, MODEL NUMBER AND SERIAL NUMBER MUST APPEAR ON EVERY PAGE
RETAIN ONE COPY OF THIS DATA SHEET FOR QA FILE

Sundstrand Advanced Technology Operations
unit of Sundstrand Corporation
4747 HARRISON AVENUE, ROCKFORD, IL 61101

TEST RECORD–CONTINUATION

PAGE NO. 98

TEST SPEC: 2538 REV. A

MODEL NO. ORC1A3A01 SERIAL NO. 002 DATE 3-23-78 DATA SHEET 82 OF 120

PROCEDURE PARAGRAPH NUMBER	PARAMETER DESCRIPTION	REQUIREMENT MINIMUM	REQUIREMENT MAXIMUM	UNITS	ACTUAL READING	
5.1.5.2	Load and Efficiency- With Controller					
#3	TEST "A" (No Load)					
	1) Residual Voltage					
	T_1-T_2	---	---	VAC	5.6	
	T_1-T_3	---	---	VAC	5.6	
	T_3-T_2	---	---	VAC	5.6	
	2) Alternator Speed	33,400	34,000	RPM	33700	
	3) Torque	---	---	IN-LBS.	.43	
	4) Housing Pressure	21	---	In.Hg.	23.2	
	5) Winding Temperatures					
	TC_1	180	275	°F	193	A
	TC_2	180	275	°F	196	A
	TC_3	180	275	°F	194	A
	TC_4	180	275	°F	185	A
	6) Cooling Oil Flow	---	---	GPM	(1m) .69	
	7) Cooling Oil Temperature	150	230	°F	199	
	8) Cooling Oil Out Temperature	---	---	°F	194	A

.... NOTE ....
TS, MODEL NUMBER AND SERIAL NUMBER MUST APPEAR ON EVERY PAGE
RETAIN ONE COPY OF THIS DATA SHEET FOR QA FILE

Sundstrand Advanced Technology Operations
unit of Sundstrand Corporation
4747 HARRISON AVENUE, ROCKFORD, IL 61101

TEST RECORD–CONTINUATION

PAGE NO. 99

TEST SPEC: 2538 REV. A

MODEL NO. ORC1A3A01 SERIAL NO. 002 DATE 3-23-78 DATA SHEET 83 OF 120

PROCEDURE PARAGRAPH NUMBER	PARAMETER DESCRIPTION	REQUIREMENT MINIMUM	REQUIREMENT MAXIMUM	UNITS	ACTUAL READING	
5.1.5.2	Load and Efficiency- With Controller		--			
#3	TEST "B" (500 Watts)					
	1) Three Phase Voltage					
	T_1-T_2	---	---	VAC	21.2	
	T_1-T_3	---	---	VAC	21.1	
	T_3-T_2	---	---	VAC	21.1	
	2) Three Phase Amps (AC)					
	Phase 1	---	---	Amps	21.8	
	Phase 2	---	---	Amps	21.8	
	Phase 3	---	---	Amps	21.8	
	3) Three Phase Watts (AC)					
	W_1	---	---	Watts	134	
	W_3	---	---	Watts	458	
	4) Field Voltage	---	---	VDC	2.3	
	5) Field Current	---	0.7	Amps	.48	A
	6) Alternator Speed	33,400	34,000	RPM	33700	
	7) Torque	---	---	IN.LBS.	2.0	
	8) Housing Pressure	21	---	In.Hg.	23.2	
	9) Winding Temperatures					
	TC_1	180	275	°F	191	A
	TC_2	180	275	°F	198	A
	TC_3	180	275	°F	196	A
	TC_4	180	275	°F	197	A
	10) Cooling Oil Flow	---	---	GPM	(245) .67	
	11) Cooling Oil Temperature	150	230	°F	201	
	12) DC Volts	27.5	28.5	Volts	28.1	
	13) DC Amps	17.3	18.5	Amps	18.0	
	14) Cooling Oil Out Temperature	---	---	°F	196	A

.... NOTE ....
TS, MODEL NUMBER AND SERIAL NUMBER MUST APPEAR ON EVERY PAGE
RETAIN ONE COPY OF THIS DATA SHEET FOR QA FILE

Sundstrand Advanced Technology Operations
unit of Sundstrand Corporation
4747 HARRISON AVENUE, ROCKFORD, IL 61101

TEST RECORD–CONTINUATION

PAGE NO. 100

TEST SPEC: 2538 REV. A

MODEL NO. ORC1A3A01 SERIAL NO. 001 DATE 3-23-78 DATA SHEET 84 OF 120

PROCEDURE PARAGRAPH NUMBER	PARAMETER DESCRIPTION	REQUIREMENT MINIMUM	REQUIREMENT MAXIMUM	UNITS	ACTUAL READING	
5.1.5.2	Load and Efficiency- With Controller					
#4	TEST "A" (No Load)					
	1) Residual Voltage					
	T_1-T_2	---	---	VAC	5.7	
	T_1-T_3	---	---	VAC	5.7	
	T_3-T_2	---	---	VAC	5.7	
	2) Alternator Speed	33,400	34,000	RPM	33700	
	3) Torque	---	---	IN-LBS.	.39	
	4) Housing Pressure	21	---	In.Hg.	23.2	
	5) Winding Temperatures					
	TC_1	180	275	°F	194	A
	TC_2	180	275	°F	196	A
	TC_3	180	275	°F	194	A
	TC_4	180	275	°F	196	A
	6) Cooling Oil Flow	---	---	GPM	(250) .68	
	7) Cooling Oil Temperature	150	230	°F	197	
	8) Cooling Oil Out Temperature	---	---	°F	193	A

.... NOTE ....
TS, MODEL NUMBER AND SERIAL NUMBER MUST APPEAR ON EVERY PAGE
RETAIN ONE COPY OF THIS DATA SHEET FOR QA FILE

Sundstrand Advanced Technology Operations
unit of Sundstrand Corporation
4747 HARRISON AVENUE, ROCKFORD, IL 61101

TEST RECORD–CONTINUATION

PAGE NO. 101

TEST SPEC: 2538 REV. A

MODEL NO. ORC1A3A01 SERIAL NO. 002 DATE 3-23-78 DATA SHEET 85 OF 120

PROCEDURE PARAGRAPH NUMBER	PARAMETER DESCRIPTION	REQUIREMENT MINIMUM	REQUIREMENT MAXIMUM	UNITS	ACTUAL READING	
5.1.5.2	Load and Efficiency- With Controller		--			
#4	TEST "B" (500 Watts)					
	1) Three Phase Voltage					
	T_1-T_2	---	---	VAC	21.3	
	T_1-T_3	---	---	VAC	21.2	
	T_3-T_2	---	---	VAC	21.2	
	2) Three Phase Amps (AC)					
	Phase 1	---	---	Amps	22.2	
	Phase 2	---	---	Amps	22.3	
	Phase 3	---	---	Amps	22.2	
	3) Three Phase Watts (AC)					
	W_1	---	---	Watts	136	
	W_3	---	---	Watts	462	
	4) Field Voltage	---	---	VDC	2.3	
	5) Field Current	---	0.7	Amps	.48	A
	6) Alternator Speed	33,400	34,000	RPM	33700	
	7) Torque	---	---	IN.LBS.	2.0	
	8) Housing Pressure	21	---	In.Hg.	23.2	
	9) Winding Temperatures					
	TC_1	180	275	°F	193	A
	TC_2	180	275	°F	188	A
	TC_3	180	275	°F	196	A
	TC_4	180	275	°F	196	A
	10) Cooling Oil Flow	---	---	GPM	(258) .71	
	11) Cooling Oil Temperature	150	230	°F	202	
	12) DC Volts	27.5	28.5	Volts	28.2	
	13) DC Amps	17.3	18.5	Amps	18.2	
	14) Cooling Oil Out Temperature	---	---	°F	197	A

.... NOTE ....
TS, MODEL NUMBER AND SERIAL NUMBER MUST APPEAR ON EVERY PAGE
RETAIN ONE COPY OF THIS DATA SHEET FOR QA FILE

Sundstrand Advanced Technology Operations
unit of Sundstrand Corporation
4747 HARRISON AVENUE, ROCKFORD IL 61101

TEST RECORD–CONTINUATION

PAGE NO. 102

TEST SPEC: 2538 REV. A

MODEL NO. ORC1A3A01 SERIAL NO. 002 DATE 3-23-78 DATA SHEET 86 OF 120

PROCEDURE PARAGRAPH NUMBER	PARAMETER DESCRIPTION	REQUIREMENT MINIMUM	REQUIREMENT MAXIMUM	UNITS	ACTUAL READING	
5.1.5.2	Load and Efficiency- With Controller					
#5	TEST "A" (No Load)					
	1) Residual Voltage					
	T_1-T_2	---	---	VAC	5.7	
	T_1-T_3	---	---	VAC	5.7	
	T_3-T_2	---	---	VAC	5.7	
	2) Alternator Speed	33,400	34,000	RPM	33700	
	3) Torque	---	---	IN-LBS.	.39	
	4) Housing Pressure	21	---	In.Hg.	23.2	
	5) Winding Temperatures					
	TC_1	180	275	°F	192	A
	TC_2	180	275	°F	195	A
	TC_3	180	275	°F	193	A
	TC_4	180	275	°F	194	A
	6) Cooling Oil Flow	---	---	GPM	(257) .68	
	7) Cooling Oil Temperature	150	230	°F	195	
	8) Cooling Oil Out Temperature	---	---	°F	190	A

.... NOTE ....
TS, MODEL NUMBER AND SERIAL NUMBER MUST APPEAR ON EVERY PAGE
RETAIN ONE COPY OF THIS DATA SHEET FOR QA FILE

Sundstrand
Advanced Technology
Operations
unit of Sundstrand Corporation
4747 HARRISON AVENUE, ROCKFORD, IL 61101

TEST RECORD–CONTINUATION

TEST SPEC: 2538 REV. A

MODEL NO. ORC1A3A01 SERIAL NO. 002 DATE 3-23-78 DATA SHEET 87 OF 120

PROCEDURE PARAGRAPH NUMBER	PARAMETER DESCRIPTION	REQUIREMENT MINIMUM	REQUIREMENT MAXIMUM	UNITS	ACTUAL READING	
5.1.5.2	Load and Efficiency- With Controller		--			
#5	TEST "B" (500 Watts)					
	1) Three Phase Voltage					
	T_1-T_2	---	---	VAC	21.0	
	T_1-T_3	---	---	VAC	21.0	
	T_3-T_2	---	---	VAC	21.0	
	2) Three Phase Amps (AC)					
	Phase 1	---	---	Amps	21.9	
	Phase 2	---	---	Amps	22.0	
	Phase 3	---	---	Amps	21.9	
	3) Three Phase Watts (AC)					
	W_1	---	---	Watts	133	
	W_3	---	---	Watts	439	
	4) Field Voltage	---	---	VDC	2.2	
	5) Field Current	---	0.7	Amps	.46	A
	6) Alternator Speed	33,400	34,000	RPM	33700	
	7) Torque	---	---	IN.LBS.	1.91	
	8) Housing Pressure	21	---	In.Hg.	23.2	
	9) Winding Temperatures					
	TC_1	180	275	°F	195	A
	TC_2	180	275	°F	199	A
	TC_3	180	275	°F	196	A
	TC_4	180	275	°F	197	A
	10) Cooling Oil Flow	---	---	GPM	(2L3) .72	
	11) Cooling Oil Temperature	150	230	°F	199	
	12) DC Volts	27.5	28.5	Volts	27.9	
	13) DC Amps	17.3	18.5	Amps	17.9	
	14) Cooling Oil Out Temperature	---	---	°F	194	A

.... NOTE ....
TS, MODEL NUMBER AND SERIAL NUMBER MUST APPEAR ON EVERY PAGE
RETAIN ONE COPY OF THIS DATA SHEET FOR QA FILE

Sundstrand
Advanced Technology
Operations
unit of Sundstrand Corporation
4747 HARRISON AVENUE, ROCKFORD, IL 61101

TEST RECORD–CONTINUATION

TEST SPEC: 2538 REV. A

MODEL NO. ORC1A3A01 SERIAL NO. 002 DATE 3-23-78 DATA SHEET 88 OF 120

PROCEDURE PARAGRAPH NUMBER	PARAMETER DESCRIPTION	REQUIREMENT MINIMUM	REQUIREMENT MAXIMUM	UNITS	ACTUAL READING	
5.1.5.2	Load and Efficiency- With Controller					
#6	TEST "A" (No Load)					
	1) Residual Voltage					
	T_1-T_2	---	---	VAC	5.7	
	T_1-T_3	---	---	VAC	5.7	
	T_3-T_2	---	---	VAC	5.7	
	2) Alternator Speed	33,400	34,000	RPM	33700	
	3) Torque	---	---	IN-LBS.	.34	
	4) Housing Pressure	21	---	In.Hg.	23.2	
	5) Winding Temperatures					
	TC_1	180	275	°F	193	A
	TC_2	180	275	°F	196	A
	TC_3	180	275	°F	194	A
	TC_4	180	275	°F	195	A
	6) Cooling Oil Flow	---	---	GPM	(247) .67	
	7) Cooling Oil Temperature	150	230	°F	212	
	8) Cooling Oil Out Temperature	---	---	°F	202	A

.... NOTE ....
TS, MODEL NUMBER AND SERIAL NUMBER MUST APPEAR ON EVERY PAGE
RETAIN ONE COPY OF THIS DATA SHEET FOR QA FILE

Sundstrand
Advanced Technology
Operations
unit of Sundstrand Corporation
4747 HARRISON AVENUE, ROCKFORD, IL 61101

TEST RECORD–CONTINUATION

TEST SPEC: 2538 REV. A

MODEL NO. ORC1A3A01 SERIAL NO. 002 DATE 3-23-78 DATA SHEET 89 OF 120

PROCEDURE PARAGRAPH NUMBER	PARAMETER DESCRIPTION	REQUIREMENT MINIMUM	REQUIREMENT MAXIMUM	UNITS	ACTUAL READING	
5.1.5.2	Load and Efficiency- With Controller		--			
#6	TEST "B" (500 Watts)					
	1) Three Phase Voltage					
	T_1-T_2	---	---	VAC	20.9	
	T_1-T_3	---	---	VAC	20.8	
	T_3-T_2	---	---	VAC	20.9	
	2) Three Phase Amps (AC)					
	Phase 1	---	---	Amps	22.0	
	Phase 2	---	---	Amps	22.0	
	Phase 3	---	---	Amps	22.0	
	3) Three Phase Watts (AC)					
	W_1	---	---	Watts	136	
	W_3	---	---	Watts	461	
	4) Field Voltage	---	---	VDC	2.2	
	5) Field Current	---	0.7	Amps	.147	A
	6) Alternator Speed	33,400	34,000	RPM	33700	
	7) Torque	---	---	IN.LBS.	1.99	
	8) Housing Pressure	21	---	In.Hg.	23.2	
	9) Winding Temperatures					
	TC_1	180	275	°F	195	A
	TC_2	180	275	°F	199	A
	TC_3	180	275	°F	196	A
	TC_4	180	275	°F	197	A
	10) Cooling Oil Flow	---	---	GPM	(253) .69	
	11) Cooling Oil Temperature	150	230	°F	197	
	12) DC Volts	27.5	28.5	Volts	27.9	
	13) DC Amps	17.3	18.5	Amps	17.9	
	14) Cooling Oil Out Temperature	---	---	°F	193	A

.... NOTE ....
TS, MODEL NUMBER AND SERIAL NUMBER MUST APPEAR ON EVERY PAGE
RETAIN ONE COPY OF THIS DATA SHEET FOR QA FILE

Sundstrand Advanced Technology Operations
unit of Sundstrand Corporation
4747 HARRISON AVENUE, ROCKFORD, IL 61101

TEST RECORD–CONTINUATION

PAGE NO. 106

TEST SPEC: 2538 REV. A

MODEL NO. ORC1A3A01 SERIAL NO. 002 DATE 3-23-78 DATA SHEET 90 OF 120

PROCEDURE PARAGRAPH NUMBER	PARAMETER DESCRIPTION	REQUIREMENT MINIMUM	REQUIREMENT MAXIMUM	UNITS	ACTUAL READING	
5.1.5.2	Load and Efficiency- With Controller					
#7	TEST "A" (No Load)					
	1) Residual Voltage					
	T_1-T_2	---	---	VAC	5.7	
	T_1-T_3	---	---	VAC	5.7	
	T_3-T_2	---	---	VAC	5.7	
	2) Alternator Speed	33,400	34,000	RPM	33700	
	3) Torque	---	---	IN-LBS.	.35	
	4) Housing Pressure	21	---	In.Hg.	23.2	
	5) Winding Temperatures					
	TC_1	180	275	°F	193	A
	TC_2	180	275	°F	196	A
	TC_3	180	275	°F	194	A
	TC_4	180	275	°F	195	A
	6) Cooling Oil Flow	---	---	GPM	(245) .66	
	7) Cooling Oil Temperature	150	230	°F	211	
	8) Cooling Oil Out Temperature	---	---	°F	202	A

.... NOTE ....
TS, MODEL NUMBER AND SERIAL NUMBER MUST APPEAR ON EVERY PAGE
RETAIN ONE COPY OF THIS DATA SHEET FOR QA FILE

Sundstrand Advanced Technology Operations
unit of Sundstrand Corporation
4747 HARRISON AVENUE, ROCKFORD, IL 61101

TEST RECORD–CONTINUATION

PAGE NO. 107

TEST SPEC: 2538 REV. A

MODEL NO. ORC1A3A01 SERIAL NO. 002 DATE 3-23-78 DATA SHEET 91 OF 120

PROCEDURE PARAGRAPH NUMBER	PARAMETER DESCRIPTION	REQUIREMENT MINIMUM	REQUIREMENT MAXIMUM	UNITS	ACTUAL READING	
5.1.5.2	Load and Efficiency- With Controller		--			
#7	TEST "B" (500 Watts)					
	1) Three Phase Voltage					
	T_1-T_2	---	---	VAC	21.2	
	T_1-T_3	---	---	VAC	21.1	
	T_3-T_2	---	---	VAC	21.2	
	2) Three Phase Amps (AC)					
	Phase 1	---	---	Amps	22.0	
	Phase 2	---	---	Amps	22.1	
	Phase 3	---	---	Amps	22.0	
	3) Three Phase Watts (AC)					
	W_1	---	---	Watts	134	
	W_3	---	---	Watts	457	
	4) Field Voltage	---	---	VDC	2.2	
	5) Field Current	---	0.7	Amps	.46	A
	6) Alternator Speed	33,400	34,000	RPM	33700	
	7) Torque	---	---	IN.LBS.	1.95	
	8) Housing Pressure	21	---	In.Hg.	22.3	
	9) Winding Temperatures					
	TC_1	180	275	°F	191	A
	TC_2	180	275	°F	199	A
	TC_3	180	275	°F	197	A
	TC_4	180	275	°F	188	A
	10) Cooling Oil Flow	---	---	GPM	(254) .69	
	11) Cooling Oil Temperature	150	230	°F	199	
	12) DC Volts	27.5	28.5	Volts	28.0	
	13) DC Amps	17.3	18.5	Amps	18.0	
	14) Cooling Oil Out Temperature	---	---	°F	184	A

.... NOTE . . .
TS, MODEL NUMBER AND SERIAL NUMBER MUST APPEAR ON EVERY PAGE
RETAIN ONE COPY OF THIS DATA SHEET FOR QA FILE

Sundstrand
Advanced Technology
Operations
unit of Sundstrand Corporation
4747 HARRISON AVENUE, ROCKFORD, IL 61101

TEST RECORD–CONTINUATION

TEST SPEC: 2538 REV. A

MODEL NO. ORC1A3A01 SERIAL NO. _____ DATE _____ DATA SHEET 92 OF 120

PROCEDURE PARAGRAPH NUMBER	PARAMETER DESCRIPTION	REQUIREMENT MINIMUM	REQUIREMENT MAXIMUM	UNITS	ACTUAL READING	
5.1.5.3	Load and Efficiency- With Controller					
#1	TEST "A" (No Load)					
	1) Residual Voltage					
	T_1-T_2	---	---	VAC	5.7	
	T_1-T_3	---	---	VAC	5.7	
	T_3-T_2	---	---	VAC	5.7	
	2) Alternator Speed	33,400	34,000	RPM	33700	
	3) Torque	---	---	IN-LBS.	.29	
	4) Housing Pressure	21	---	In.Hg.	23.2	
	5) Winding Temperatures					
	TC_1	180	275	°F	194	A
	TC_2	180	275	°F	198	A
	TC_3	180	275	°F	196	A
	TC_4	180	275	°F	197	A
	6) Cooling Oil Flow	---	---	GPM	(284) .69	
	7) Cooling Oil Temperature	150	230	°F	201	
	8) Cooling Oil Out Temperature	---	---	°F	197	A

.... NOTE ....
TS, MODEL NUMBER AND SERIAL NUMBER MUST APPEAR ON EVERY PAGE
RETAIN ONE COPY OF THIS DATA SHEET FOR QA FILE

Sundstrand Advanced Technology Operations
unit of Sundstrand Corporation
4747 HARRISON AVENUE, ROCKFORD, IL 61101

TEST RECORD–CONTINUATION

PAGE NO. 109

TEST SPEC: 2538 REV. A

MODEL NO. ORC1A3A01 SERIAL NO. 002 DATE 3-23-78 DATA SHEET 93 OF 120

PROCEDURE PARAGRAPH NUMBER	PARAMETER DESCRIPTION	REQUIREMENT MINIMUM	REQUIREMENT MAXIMUM	UNITS	ACTUAL READING	
5.1.5.3	Load and Efficiency- With Controller		--			
#1	TEST "B" (900 Watts)					
	1) Three Phase Voltage					
	T_1-T_2	---	---	VAC	22.1	
	T_1-T_3	---	---	VAC	22.1	
	T_3-T_2	---	---	VAC	22.2	
	2) Three Phase Amps (AC)					
	Phase 1	---	---	Amps	31.2	
	Phase 2	---	---	Amps	31.2	
	Phase 3	---	---	Amps	31.2	
	3) Three Phase Watts (AC)					
	W_1	---	---	Watts	373	
	W_3	---	---	Watts	684	
	4) Field Voltage	---	---	VDC	4.2	
	5) Field Current	---	1.2	Amps	.80	A
	6) Alternator Speed	33,400	34,000	RPM	33700	
	7) Torque	---	---	IN.LBS.	3.12	
	8) Housing Pressure	21	---	In.Hg.	23.2	
	9) Winding Temperatures					
	TC_1	180	275	°F	199	A
	TC_2	180	275	°F	204	A
	TC_3	180	275	°F	202	A
	TC_4	180	275	°F	202	A
	10) Cooling Oil Flow	---	---	GPM	(246) .67	
	11) Cooling Oil Temperature	150	230	°F	201	
	12) DC Volts	27.5	28.5	Volts	28.0	
	13) DC Amps	31.3	33.0	Amps	32.2	
	14) Cooling Oil Out Temperature	---	---	°F	197	A

.... NOTE ....
TS, MODEL NUMBER AND SERIAL NUMBER MUST APPEAR ON EVERY PAGE
RETAIN ONE COPY OF THIS DATA SHEET FOR QA FILE

Sundstrand Advanced Technology Operations
unit of Sundstrand Corporation
4747 HARRISON AVENUE, ROCKFORD, IL 61101

TEST RECORD—CONTINUATION

PAGE NO. 110

TEST SPEC: 2538 REV. A

MODEL NO. ORC1A3A01 SERIAL NO. 002 DATE 3-23-78 DATA SHEET 94 OF 120

PROCEDURE PARAGRAPH NUMBER	PARAMETER DESCRIPTION	REQUIREMENT MINIMUM	REQUIREMENT MAXIMUM	UNITS	ACTUAL READING	
5.1.5.3	Load and Efficiency- With Controller					
#2	TEST "A" (No Load)					
	1) Residual Voltage					
	T_1-T_2	---	---	VAC	5.6	
	T_1-T_3	---	---	VAC	5.6	
	T_3-T_2	---	---	VAC	5.6	
	2) Alternator Speed	33,400	34,000	RPM	33700	
	3) Torque	---	---	IN-LBS.	.32	
	4) Housing Pressure	21	---	In.Hg.	23.1	
	5) Winding Temperatures					
	TC_1	180	275	°F	198	A
	TC_2	180	275	°F	202	A
	TC_3	180	275	°F	200	A
	TC_4	180	275	°F	201	A
	6) Cooling Oil Flow	---	---	GPM	(251) .68	
	7) Cooling Oil Temperature	150	230	°F	197	
	8) Cooling Oil Out Temperature	---	---	°F	193	A

.... NOTE ....
TS, MODEL NUMBER AND SERIAL NUMBER MUST APPEAR ON EVERY PAGE
RETAIN ONE COPY OF THIS DATA SHEET FOR QA FILE

Sundstrand Advanced Technology Operations
unit of Sundstrand Corporation
4747 HARRISON AVENUE, ROCKFORD, IL 61101

TEST RECORD—CONTINUATION

PAGE NO. 111

TEST SPEC: 2538 REV. A

MODEL NO. ORC1A3A01 SERIAL NO. 002 DATE 3-23-78 DATA SHEET 95 OF 120

PROCEDURE PARAGRAPH NUMBER	PARAMETER DESCRIPTION	REQUIREMENT MINIMUM	REQUIREMENT MAXIMUM	UNITS	ACTUAL READING	
5.1.5.3	Load and Efficiency- With Controller					
#2	TEST "B" (900 Watts)					
	1) Three Phase Voltage					
	T_1-T_2	---	---	VAC	22.1	
	T_1-T_3	---	---	VAC	22.1	
	T_3-T_2	---	---	VAC	22.1	
	2) Three Phase Amps (AC)					
	Phase 1	---	---	Amps	31.0	
	Phase 2	---	---	Amps	31.1	
	Phase 3	---	---	Amps	31.2	
	3) Three Phase Watts (AC)					
	W_1	---	---	Watts	374	
	W_3	---	---	Watts	686	
	4) Field Voltage	---	---	VDC	4.2	
	5) Field Current	---	1.2	Amps	.90	A
	6) Alternator Speed	33,400	34,000	RPM	33700	
	7) Torque	---	---	IN.LBS.	3.12	
	8) Housing Pressure	21	---	In.Hg.	23.1	
	9) Winding Temperatures					
	TC_1	180	275	°F	198	A
	TC_2	180	275	°F	202	A
	TC_3	180	275	°F	200	A
	TC_4	180	275	°F	200	A
	10) Cooling Oil Flow	---	---	GPM	(238) .66	
	11) Cooling Oil Temperature	150	230	°F	204	
	12) DC Volts	27.5	28.5	Volts	28.0	
	13) DC Amps	31.3	33.0	Amps	32.2	
	14) Cooling Oil Out Temperature	---	---	°F	200	A

.... NOTE ....
TS, MODEL NUMBER AND SERIAL NUMBER MUST APPEAR ON EVERY PAGE
RETAIN ONE COPY OF THIS DATA SHEET FOR QA FILE

Sundstrand Advanced Technology Operations
unit of Sundstrand Corporation
4747 HARRISON AVENUE, ROCKFORD, IL 61101

TEST RECORD–CONTINUATION

PAGE NO. 112

TEST SPEC: 2538 REV. A

MODEL NO. ORC1A3A01 SERIAL NO. 002 DATE 3-23-78 DATA SHEET 96 OF 120

PROCEDURE PARAGRAPH NUMBER	PARAMETER DESCRIPTION	REQUIREMENT MINIMUM	REQUIREMENT MAXIMUM	UNITS	ACTUAL READING	
5.1.5.3	Load and Efficiency- With Controller					
#3	TEST "A" (No Load)					
	1) Residual Voltage					
	T_1-T_2	---	---	VAC	5.8	
	T_1-T_3	---	---	VAC	5.8	
	T_3-T_2	---	---	VAC	5.8	
	2) Alternator Speed	33,400	34,000	RPM	33700	
	3) Torque	---	---	IN-LBS.	.29	
	4) Housing Pressure	21	---	In.Hg.	23.1	
	5) Winding Temperatures					
	TC_1	180	275	°F	198	A
	TC_2	180	275	°F	202	A
	TC_3	180	275	°F	200	A
	TC_4	180	275	°F	201	A
	6) Cooling Oil Flow	---	---	GPM	(251) .68	
	7) Cooling Oil Temperature	150	230	°F	200	
	8) Cooling Oil Out Temperature	---	---	°F	196	A

.... NOTE ....
TS, MODEL NUMBER AND SERIAL NUMBER MUST APPEAR ON EVERY PAGE
RETAIN ONE COPY OF THIS DATA SHEET FOR QA FILE

Sundstrand
Advanced Technology
Operations
unit of Sundstrand Corporation
4747 HARRISON AVENUE, ROCKFORD IL 61101

TEST RECORD—CONTINUATION

TEST SPEC: 2538 REV. A

MODEL NO. ORCIA3A01 SERIAL NO. 002 DATE 3-23-78 DATA SHEET 97 OF 120

PROCEDURE PARAGRAPH NUMBER	PARAMETER DESCRIPTION	REQUIREMENT MINIMUM	REQUIREMENT MAXIMUM	UNITS	ACTUAL READING	
5.1.5.3	Load and Efficiency- With Controller					
#3	TEST "B" (900 Watts)					
	1) Three Phase Voltage					
	T_1-T_2	---	---	VAC	22.1	
	T_1-T_3	---	---	VAC	22.1	
	T_3-T_2	---	---	VAC	22.1	
	2) Three Phase Amps (AC)					
	Phase 1	---	---	Amps	31.2	
	Phase 2	---	---	Amps	31.2	
	Phase 3	---	---	Amps	31.2	
	3) Three Phase Watts (AC)					
	W_1	---	---	Watts	373	
	W_3	---	---	Watts	682	
	4) Field Voltage	---	---	VDC	4.3	
	5) Field Current	---	1.2	Amps	.90	A
	6) Alternator Speed	33,400	34,000	RPM	33700	
	7) Torque	---	---	IN.LBS.	3.09	
	8) Housing Pressure	21	---	In.Hg.	23.2	
	9) Winding Temperatures					
	TC_1	180	275	°F	199	A
	TC_2	180	275	°F	203	A
	TC_3	180	275	°F	201	A
	TC_4	180	275	°F	201	A
	10) Cooling Oil Flow	---	---	GPM	(248) .68	
	11) Cooling Oil Temperature	150	230	°F	206	
	12) DC Volts	27.5	28.5	Volts	28.0	
	13) DC Amps	31.3	33.0	Amps	32.2	
	14) Cooling Oil Out Temperature	---	---	°F	201	A

.... NOTE ....
TS, MODEL NUMBER AND SERIAL NUMBER MUST APPEAR ON EVERY PAGE
RETAIN ONE COPY OF THIS DATA SHEET FOR QA FILE

Sundstrand
Advanced Technology
Operations
unit of Sundstrand Corporation
4747 HARRISON AVENUE, ROCKFORD, IL 61101

TEST RECORD–CONTINUATION

TEST SPEC: 2538 REV. A

MODEL NO. ORC1A3A01 SERIAL NO. 002 DATE 3-23-78 DATA SHEET 98 OF 120

PROCEDURE PARAGRAPH NUMBER	PARAMETER DESCRIPTION	REQUIREMENT MINIMUM	REQUIREMENT MAXIMUM	UNITS	ACTUAL READING	
5.1.5.3	Load and Efficiency- With Controller					
#4	TEST "A" (No Load)					
	1) Residual Voltage					
	T_1-T_2	---	---	VAC	5.5	
	T_1-T_3	---	---	VAC	5.5	
	T_3-T_2	---	---	VAC	5.5	
	2) Alternator Speed	33,400	34,000	RPM	33700	
	3) Torque	---	---	IN-LBS.	.28	
	4) Housing Pressure	21	---	In.Hg.	23.1	
	5) Winding Temperatures					
	TC_1	180	275	°F	196	
	TC_2	180	275	°F	200	A
	TC_3	180	275	°F	198	
	TC_4	180	275	°F	199	
	6) Cooling Oil Flow	---	---	GPM	(252) .68	
	7) Cooling Oil Temperature	150	230	°F	195	
	8) Cooling Oil Out Temperature	---	---	°F	191	A

.... NOTE ....
TS, MODEL NUMBER AND SERIAL NUMBER MUST APPEAR ON EVERY PAGE
RETAIN ONE COPY OF THIS DATA SHEET FOR QA FILE

Sundstrand Advanced Technology Operations
unit of Sundstrand Corporation
4747 HARRISON AVENUE, ROCKFORD, IL 61101

TEST RECORD–CONTINUATION

PAGE NO. 115

TEST SPEC: 2538 REV. A

MODEL NO. ORC1A3A01 SERIAL NO. 002 DATE 3-23-78 DATA SHEET 99 OF 120

PROCEDURE PARAGRAPH NUMBER	PARAMETER DESCRIPTION	REQUIREMENT MINIMUM	REQUIREMENT MAXIMUM	UNITS	ACTUAL READING	
5.1.5.3	Load and Efficiency- With Controller		--			
#4	TEST "B" (900 Watts)					
	1) Three Phase Voltage					
	T_1-T_2	---	---	VAC	22.1	
	T_1-T_3	---	---	VAC	22.0	
	T_3-T_2	---	---	VAC	22.1	
	2) Three Phase Amps (AC)					
	Phase 1	---	---	Amps	31.1	
	Phase 2	---	---	Amps	31.1	
	Phase 3	---	---	Amps	31.0	
	3) Three Phase Watts (AC)					
	W_1	---	---	Watts	373	
	W_3	---	---	Watts	685	
	4) Field Voltage	---	---	VDC	4.3	
	5) Field Current	---	1.2	Amps	.9	A
	6) Alternator Speed	33,400	34,000	RPM	33700	
	7) Torque	---	---	IN.LBS.	3.05	
	8) Housing Pressure	21	---	In.Hg.	23.1	
	9) Winding Temperatures					
	TC_1	180	275	°F	196	A
	TC_2	180	275	°F	199	A
	TC_3	180	275	°F	197	A
	TC_4	180	275	°F	199	A
	10) Cooling Oil Flow	---	---	GPM	(259) .71	
	11) Cooling Oil Temperature	150	230	°F	214	
	12) DC Volts	27.5	28.5	Volts	28.0	
	13) DC Amps	31.3	33.0	Amps	32.2	
	14) Cooling Oil Out Temperature	---	---	°F	206	A

.... NOTE ....
TS, MODEL NUMBER AND SERIAL NUMBER MUST APPEAR ON EVERY PAGE
RETAIN ONE COPY OF THIS DATA SHEET FOR QA FILE

Sundstrand
Advanced Technology
Operations
unit of Sundstrand Corporation
4747 HARRISON AVENUE, ROCKFORD, IL 61101

TEST RECORD–CONTINUATION

TEST SPEC: 2538 REV. A

MODEL NO. ORC1A3A01 SERIAL NO. 002 DATE 3-23-78 DATA SHEET 100 OF 120

PROCEDURE PARAGRAPH NUMBER	PARAMETER DESCRIPTION	REQUIREMENT MINIMUM	REQUIREMENT MAXIMUM	UNITS	ACTUAL READING	
5.1.5.3	Load and Efficiency- With Controller					
#5	TEST "A" (No Load)					
	1) Residual Voltage					
	T_1-T_2	---	---	VAC	5.4	
	T_1-T_3	---	---	VAC	5.4	
	T_3-T_2	---	---	VAC	5.4	
	2) Alternator Speed	33,400	34,000	RPM	33700	
	3) Torque	---	---	IN-LBS.	.23	
	4) Housing Pressure	21	---	In.Hg.	23.1	
	5) Winding Temperatures					
	TC_1	180	275	°F	193	A
	TC_2	180	275	°F	197	A
	TC_3	180	275	°F	195	A
	TC_4	180	275	°F	186	A
	6) Cooling Oil Flow	---	---	GPM	(251) .68	
	7) Cooling Oil Temperature	150	230	°F	216	
	8) Cooling Oil Out Temperature	---	---	°F	207	A

.... NOTE ....
TS, MODEL NUMBER AND SERIAL NUMBER MUST APPEAR ON EVERY PAGE
RETAIN ONE COPY OF THIS DATA SHEET FOR QA FILE

Sundstrand
Advanced Technology
Operations
unit of Sundstrand Corporation
4747 HARRISON AVENUE, ROCKFORD, IL 61101

TEST RECORD–CONTINUATION

TEST SPEC: 2538 REV. A

MODEL NO. ORC1A3A01 SERIAL NO. 002 DATE 3-23-78 DATA SHEET 101 OF 120

PROCEDURE PARAGRAPH NUMBER	PARAMETER DESCRIPTION	REQUIREMENT MINIMUM	REQUIREMENT MAXIMUM	UNITS	ACTUAL READING	
5.1.5.3	Load and Efficiency- With Controller		--			
#5	TEST "B" (900 Watts)					
	1) Three Phase Voltage					
	T_1-T_2	---	---	VAC	22.1	
	T_1-T_3	---	---	VAC	22.1	
	T_3-T_2	---	---	VAC	22.1	
	2) Three Phase Amps (AC)					
	Phase 1	---	---	Amps	31.2	
	Phase 2	---	---	Amps	31.2	
	Phase 3	---	---	Amps	31.2	
	3) Three Phase Watts (AC)					
	W_1	---	---	Watts	372	
	W_3	---	---	Watts	682	
	4) Field Voltage	---	---	VDC	4.3	
	5) Field Current	---	1.2	Amps	.90	A
	6) Alternator Speed	33,400	34,000	RPM	33700	
	7) Torque	---	---	IN.LBS.	3.07	
	8) Housing Pressure	21	---	In.Hg.	23.1	
	9) Winding Temperatures					
	TC_1	180	275	°F	195	A
	TC_2	180	275	°F	188	A
	TC_3	180	275	°F	196	A
	TC_4	180	275	°F	198	A
	10) Cooling Oil Flow	---	---	GPM	(251) .68	
	11) Cooling Oil Temperature	150	230	°F	200	
	12) DC Volts	27.5	28.5	Volts	28.0	
	13) DC Amps	31.3	33.0	Amps	32.2	
	14) Cooling Oil Out Temperature	---	---	°F	195	A

.... NOTE ....
TS, MODEL NUMBER AND SERIAL NUMBER MUST APPEAR ON EVERY PAGE
RETAIN ONE COPY OF THIS DATA SHEET FOR QA FILE

Sundstrand Advanced Technology Operations
unit of Sundstrand Corporation
4747 HARRISON AVENUE, ROCKFORD, IL 61101

TEST RECORD–CONTINUATION

PAGE NO. 118

TEST SPEC: 2538 REV. A

MODEL NO. ORC1A3A01 SERIAL NO. 002 DATE 3-23-78 DATA SHEET 102 OF 120

PROCEDURE PARAGRAPH NUMBER	PARAMETER DESCRIPTION	REQUIREMENT MINIMUM	REQUIREMENT MAXIMUM	UNITS	ACTUAL READING	
5.1.5.3	Load and Efficiency- With Controller					
#6	TEST "A" (No Load)					
	1) Residual Voltage					
	T_1-T_2	---	---	VAC	5.6	
	T_1-T_3	---	---	VAC	5.6	
	T_3-T_2	---	---	VAC	5.6	
	2) Alternator Speed	33,400	34,000	RPM	33700	
	3) Torque	---	---	IN-LBS.	.20	
	4) Housing Pressure	21	---	In.Hg.	23.0	
	5) Winding Temperatures					
	TC_1	180	275	°F	197	A
	TC_2	180	275	°F	199	A
	TC_3	180	275	°F	197	A
	TC_4	180	275	°F	199	A
	6) Cooling Oil Flow	---	---	GPM	(246) .67	
	7) Cooling Oil Temperature	150	230	°F	202	
	8) Cooling Oil Out Temperature	---	---	°F	195	A

.... NOTE ....
TS, MODEL NUMBER AND SERIAL NUMBER MUST APPEAR ON EVERY PAGE
RETAIN ONE COPY OF THIS DATA SHEET FOR QA FILE

Sundstrand
Advanced Technology
Operations
unit of Sundstrand Corporation
4747 HARRISON AVENUE, ROCKFORD, IL 61101

TEST RECORD–CONTINUATION

TEST SPEC: 2538 REV. A

MODEL NO. ORC1A3A01 SERIAL NO. 002 DATE 3-23-78 DATA SHEET 103 OF 120

PROCEDURE PARAGRAPH NUMBER	PARAMETER DESCRIPTION	REQUIREMENT MINIMUM	REQUIREMENT MAXIMUM	UNITS	ACTUAL READING	
5.1.5.3	Load and Efficiency- With Controller		--			
#6	TEST "B" (900 Watts)					
	1) Three Phase Voltage					
	T_1-T_2	---	---	VAC	22.0	
	T_1-T_3	---	---	VAC	22.0	
	T_3-T_2	---	---	VAC	22.0	
	2) Three Phase Amps (AC)					
	Phase 1	---	---	Amps	31.1	
	Phase 2	---	---	Amps	31.1	
	Phase 3	---	---	Amps	31.1	
	3) Three Phase Watts (AC)					
	W_1	---	---	Watts	371	
	W_3	---	---	Watts	678	
	4) Field Voltage	---	---	VDC	4.4	
	5) Field Current	---	1.2	Amps	.92	A
	6) Alternator Speed	33,400	34,000	RPM	33700	
	7) Torque	---	---	IN.LBS.	3.05	
	8) Housing Pressure	21	---	In.Hg.	23.0	
	9) Winding Temperatures					
	TC_1	180	275	°F	196	A
	TC_2	180	275	°F	199	A
	TC_3	180	275	°F	197	A
	TC_4	180	275	°F	198	A
	10) Cooling Oil Flow	---	---	GPM	(251) .68	
	11) Cooling Oil Temperature	150	230	°F	200	
	12) DC Volts	27.5	28.5	Volts	27.9	
	13) DC Amps	31.3	33.0	Amps	32.1	
	14) Cooling Oil Out Temperature	---	---	°F	196	A

.... NOTE ....
TS, MODEL NUMBER AND SERIAL NUMBER MUST APPEAR ON EVERY PAGE
RETAIN ONE COPY OF THIS DATA SHEET FOR QA FILE

MODEL NO. ORC1A3A01 SERIAL NO. 002 DATE 3-23-78 DATA SHEET 104 OF 120

PROCEDURE PARAGRAPH NUMBER	PARAMETER DESCRIPTION	REQUIREMENT MINIMUM	REQUIREMENT MAXIMUM	UNITS	ACTUAL READING	
5.1.5.3	Load and Efficiency- With Controller					
#7	TEST "A" (No Load)					
	1) Residual Voltage					
	T_1-T_2	---	---	VAC	5.7	
	T_1-T_3	---	---	VAC	5.7	
	T_3-T_2	---	---	VAC	5.7	
	2) Alternator Speed	33,400	34,000	RPM	33700	
	3) Torque	---	---	IN-LBS.	.25	
	4) Housing Pressure	21	---	In.Hg.	23.0	
	5) Winding Temperatures					
	TC_1	180	275	°F	197	A
	TC_2	180	275	°F	200	A
	TC_3	180	275	°F	198	A
	TC_4	180	275	°F	199	A
	6) Cooling Oil Flow	---	---	GPM	(247) .67	
	7) Cooling Oil Temperature	150	230	°F	194	
	8) Cooling Oil Out Temperature	---	---	°F	190	A

.... NOTE ....
TS, MODEL NUMBER AND SERIAL NUMBER MUST APPEAR ON EVERY PAGE
RETAIN ONE COPY OF THIS DATA SHEET FOR QA FILE

Sundstrand Advanced Technology Operations
unit of Sundstrand Corporation
4747 HARRISON AVENUE, ROCKFORD, IL 61101

TEST RECORD–CONTINUATION

PAGE NO. 121

TEST SPEC: 2538 REV. A

MODEL NO. ORC1A3A01 SERIAL NO. 002 DATE 3-23-78 DATA SHEET 105 OF 120

PROCEDURE PARAGRAPH NUMBER	PARAMETER DESCRIPTION	REQUIREMENT MINIMUM	REQUIREMENT MAXIMUM	UNITS	ACTUAL READING	
5.1.5.3	Load and Efficiency- With Controller					
#7	TEST "B" (900 Watts)					
	1) Three Phase Voltage					
	T_1-T_2	---	---	VAC	22.2	
	T_1-T_3	---	---	VAC	22.1	
	T_3-T_2	---	---	VAC	22.2	
	2) Three Phase Amps (AC)					
	Phase 1	---	---	Amps	31.4	
	Phase 2	---	---	Amps	31.4	
	Phase 3	---	---	Amps	31.3	
	3) Three Phase Watts (AC)					
	W_1	---	---	Watts	375	
	W_3	---	---	Watts	688	
	4) Field Voltage	---	---	VDC	4.3	
	5) Field Current	---	1.2	Amps	.90	A
	6) Alternator Speed	33,400	34,000	RPM	33700	
	7) Torque	---	---	IN.LBS.	3.06	
	8) Housing Pressure	21	---	In.Hg.	23.0	
	9) Winding Temperatures					
	TC_1	180	275	°F	196	A
	TC_2	180	275	°F	200	A
	TC_3	180	275	°F	199	A
	TC_4	180	275	°F	199	A
	10) Cooling Oil Flow	---	---	GPM	(257).70	
	11) Cooling Oil Temperature	150	230	°F	202	
	12) DC Volts	27.5	28.5	Volts	28.1	
	13) DC Amps	31.3	33.0	Amps	32.3	
	14) Cooling Oil Out Temperature	---	---	°F	197	A

.... NOTE ....
TS, MODEL NUMBER AND SERIAL NUMBER MUST APPEAR ON EVERY PAGE
RETAIN ONE COPY OF THIS DATA SHEET FOR QA FILE

Sundstrand
Advanced Technology
Operations
unit of Sundstrand Corporation
4747 HARRISON AVENUE, ROCKFORD, IL 61101

TEST RECORD–CONTINUATION

TEST SPEC: 2538 REV. A

MODEL NO. ORC1A3A01 SERIAL NO. 002 DATE 3-23-78 DATA SHEET 106 OF 120

PROCEDURE PARAGRAPH NUMBER	PARAMETER DESCRIPTION	REQUIREMENT MINIMUM	REQUIREMENT MAXIMUM	UNITS	ACTUAL READING
5.1.5.4	Load and Efficiency- With Controller				
#1	TEST "A" (No Load)				
	1) Residual Voltage				
	T_1-T_2	---	---	VAC	5.7
	T_1-T_3	---	---	VAC	5.7
	T_3-T_2	---	---	VAC	5.7
	2) Alternator Speed	33,400	34,000	RPM	33700
	3) Torque	---	---	IN-LBS.	.27
	4) Housing Pressure	21	---	In.Hg.	23.0
	5) Winding Temperatures				
	TC_1	180	275	°F	199
	TC_2	180	275	°F	202
	TC_3	180	275	°F	200
	TC_4	180	275	°F	201
	6) Cooling Oil Flow	---	---	GPM	(249) .68
	7) Cooling Oil Temperature	150	230	°F	197
	8) Cooling Oil Out Temperature	---	---	°F	193

A
A

.... NOTE ....
TS, MODEL NUMBER AND SERIAL NUMBER MUST APPEAR ON EVERY PAGE
RETAIN ONE COPY OF THIS DATA SHEET FOR QA FILE

Sundstrand Advanced Technology Operations
unit of Sundstrand Corporation
4747 HARRISON AVENUE, ROCKFORD, IL 61101

TEST RECORD–CONTINUATION

PAGE NO. 123

TEST SPEC: 2538 REV. A

MODEL NO. ORC1A3A01 SERIAL NO. 002 DATE 3-23-78 DATA SHEET 107 OF 120

PROCEDURE PARAGRAPH NUMBER	PARAMETER DESCRIPTION	REQUIREMENT MINIMUM	REQUIREMENT MAXIMUM	UNITS	ACTUAL READING	
5.1.5.4	Load and Efficiency- With Controller		--			
#1	TEST "B" (2000 Watts)					
	1) Three Phase Voltage					
	T_1-T_2	---	---	VAC	24.6	
	T_1-T_3	---	---	VAC	24.7	
	T_3-T_2	---	---	VAC	24.7	
	2) Three Phase Amps (AC)					
	Phase 1	---	---	Amps	60.8	
	Phase 2	---	---	Amps	60.9	
	Phase 3	---	---	Amps	60.9	
	3) Three Phase Watts (AC)					
	W_1	---	---	Watts	1157	
	W_3	---	---	Watts	1404	
	4) Field Voltage	---	---	VDC	10.8	
	5) Field Current	---	2.5	Amps	2.2	A
	6) Alternator Speed	33,400	34,000	RPM	33700	
	7) Torque	---	---	IN.LBS.	7.22	
	8) Housing Pressure	21	---	In.Hg.	23.0	
	9) Winding Temperatures					
	TC_1	180	275	°F	216	A
	TC_2	180	275	°F	219	A
	TC_3	180	275	°F	218	A
	TC_4	180	275	°F	218	A
	10) Cooling Oil Flow	---	---	GPM	(246) .67	
	11) Cooling Oil Temperature	150	230	°F	194	
	12) DC Volts	27.5	28.5	Volts	28.0	
	13) DC Amps	70.2	72.8	Amps	71.5	
	14) Cooling Oil Out Temperature	---	---	°F	192	A

.... NOTE ....
TS, MODEL NUMBER AND SERIAL NUMBER MUST APPEAR ON EVERY PAGE
RETAIN ONE COPY OF THIS DATA SHEET FOR QA FILE

MODEL NO. ORC1A3A01 SERIAL NO. 002 DATE 3-23-78 DATA SHEET 108 OF 120

PROCEDURE PARAGRAPH NUMBER	PARAMETER DESCRIPTION	REQUIREMENT MINIMUM	REQUIREMENT MAXIMUM	UNITS	ACTUAL READING	
5.1.5.4	Load and Efficiency- With Controller					
#2	TEST "A" (No Load)					
	1) Residual Voltage					
	T_1-T_2	---	---	VAC	5.1	
	T_1-T_3	---	---	VAC	5.1	
	T_3-T_2	---	---	VAC	5.1	
	2) Alternator Speed	33,400	34,000	RPM	33700	
	3) Torque	---	---	IN-LBS.	.12	
	4) Housing Pressure	21	---	In.Hg.	23.0	
	5) Winding Temperatures					
	TC_1	180	275	°F	211	A
	TC_2	180	275	°F	213	A
	TC_3	180	275	°F	212	A
	TC_4	180	275	°F	213	A
	6) Cooling Oil Flow	---	---	GPM	(266) .71	
	7) Cooling Oil Temperature	150	230	°F	216	
	8) Cooling Oil Out Temperature	---	---	°F	208	A

.... NOTE ....
TS, MODEL NUMBER AND SERIAL NUMBER MUST APPEAR ON EVERY PAGE
RETAIN ONE COPY OF THIS DATA SHEET FOR QA FILE

Sundstrand
Advanced Technology
Operations
unit of Sundstrand Corporation
4747 HARRISON AVENUE, ROCKFORD, IL 61101

TEST RECORD—CONTINUATION

TEST SPEC: 2538 REV. A

MODEL NO. ORC1A3A01 SERIAL NO. 002 DATE 3-23-78 DATA SHEET 109 OF 120

PROCEDURE PARAGRAPH NUMBER	PARAMETER DESCRIPTION	REQUIREMENT MINIMUM	REQUIREMENT MAXIMUM	UNITS	ACTUAL READING	
5.1.5.4	Load and Efficiency- With Controller		--			
#2	TEST "B" (2000 Watts)					
	1) Three Phase Voltage					
	T_1-T_2	---	---	VAC	24.7	
	T_1-T_3	---	---	VAC	24.8	
	T_3-T_2	---	---	VAC	24.9	
	2) Three Phase Amps (AC)					
	Phase 1	---	---	Amps	61.5	
	Phase 2	---	---	Amps	61.4	
	Phase 3	---	---	Amps	61.3	
	3) Three Phase Watts (AC)					
	W_1	---	---	Watts	1171	
	W_3	---	---	Watts	1423	
	4) Field Voltage	---	---	VDC	10.8	
	5) Field Current	---	2.5	Amps	2.2	A
	6) Alternator Speed	33,400	34,000	RPM	33700	
	7) Torque	---	---	IN.LBS.	7.15	
	8) Housing Pressure	21	---	In.Hg.	23.0	
	9) Winding Temperatures					
	TC_1	180	275	°F	211	A
	TC_2	180	275	°F	213	A
	TC_3	180	275	°F	212	A
	TC_4	180	275	°F	213	A
	10) Cooling Oil Flow	---	---	GPM	(249) .68	
	11) Cooling Oil Temperature	150	230	°F	206	
	12) DC Volts	27.5	28.5	Volts	28.0	
	13) DC Amps	70.2	72.8	Amps	71.5	
	14) Cooling Oil Out Temperature	---	---	°F	202	A

.... NOTE ....
TS, MODEL NUMBER AND SERIAL NUMBER MUST APPEAR ON EVERY PAGE
RETAIN ONE COPY OF THIS DATA SHEET FOR QA FILE

Sundstrand
Advanced Technology
Operations
unit of Sundstrand Corporation
4747 HARRISON AVENUE, ROCKFORD, IL 61101

TEST RECORD—CONTINUATION

TEST SPEC: 2538 REV. A

MODEL NO. ORC1A3A01 SERIAL NO. 002 DATE 3-23-78 DATA SHEET 110 OF 120

PROCEDURE PARAGRAPH NUMBER	PARAMETER DESCRIPTION	REQUIREMENT MINIMUM	REQUIREMENT MAXIMUM	UNITS	ACTUAL READING	
5.1.5.4	Load and Efficiency- With Controller					
#3	TEST "A" (No Load)					
	1) Residual Voltage					
	T_1-T_2	---	---	VAC	5.6	
	T_1-T_3	---	---	VAC	5.6	
	T_3-T_2	---	---	VAC	5.6	
	2) Alternator Speed	33,400	34,000	RPM	33700	
	3) Torque	---	---	IN-LBS.	.16	
	4) Housing Pressure	21	---	In.Hg.	23.0	
	5) Winding Temperatures					
	TC_1	180	275	°F	208	A
	TC_2	180	275	°F	211	A
	TC_3	180	275	°F	209	A
	TC_4	180	275	°F	210	A
	6) Cooling Oil Flow	---	---	GPM	(254) .69	
	7) Cooling Oil Temperature	150	230	°F	200	
	8) Cooling Oil Out Temperature	---	---	°F	196	A

.... NOTE ....
TS, MODEL NUMBER AND SERIAL NUMBER MUST APPEAR ON EVERY PAGE
RETAIN ONE COPY OF THIS DATA SHEET FOR QA FILE

Sundstrand Advanced Technology Operations
unit of Sundstrand Corporation
4747 HARRISON AVENUE, ROCKFORD, IL 61101

TEST RECORD–CONTINUATION

PAGE NO. 127

TEST SPEC: 2538 REV. A

MODEL NO. ORC1A3A01 SERIAL NO. 002 DATE 3-23-78 DATA SHEET 111 OF 120

PROCEDURE PARAGRAPH NUMBER	PARAMETER DESCRIPTION	REQUIREMENT MINIMUM	REQUIREMENT MAXIMUM	UNITS	ACTUAL READING	
5.1.5.4	Load and Efficiency- With Controller					
#3	TEST "B" (2000 Watts)					
	1) Three Phase Voltage					
	T_1-T_2	---	---	VAC	24.9	
	T_1-T_3	---	---	VAC	25.0	
	T_3-T_2	---	---	VAC	25.0	
	2) Three Phase Amps (AC)					
	Phase 1	---	---	Amps	61.7	
	Phase 2	---	---	Amps	61.9	
	Phase 3	---	---	Amps	61.9	
	3) Three Phase Watts (AC)					
	W_1	---	---	Watts	1168	
	W_3	---	---	Watts	1416	
	4) Field Voltage	---	---	VDC	10.8	
	5) Field Current	---	2.5	Amps	2.2	A
	6) Alternator Speed	33,400	34,000	RPM	33700	
	7) Torque	---	---	IN.LBS.	7.20	
	8) Housing Pressure	21	---	In.Hg.	23.0	
	9) Winding Temperatures					
	TC_1	180	275	°F	212	A
	TC_2	180	275	°F	214	A
	TC_3	180	275	°F	213	A
	TC_4	180	275	°F	214	A
	10) Cooling Oil Flow	---	---	GPM	(249) .68	
	11) Cooling Oil Temperature	150	230	°F	217	
	12) DC Volts	27.5	28.5	Volts	28.0	
	13) DC Amps	70.2	72.8	Amps	71.5	
	14) Cooling Oil Out Temperature	---	---	°F	208	A

.... NOTE ....
TS, MODEL NUMBER AND SERIAL NUMBER MUST APPEAR ON EVERY PAGE
RETAIN ONE COPY OF THIS DATA SHEET FOR QA FILE

Sundstrand
Advanced Technology
Operations
unit of Sundstrand Corporation
4747 HARRISON AVENUE, ROCKFORD, IL 61101

TEST RECORD–CONTINUATION

TEST SPEC: 2538 REV. A

MODEL NO. ORC1A3A01 SERIAL NO. 002 DATE 3-23-78 DATA SHEET 112 OF 120

PROCEDURE PARAGRAPH NUMBER	PARAMETER DESCRIPTION	REQUIREMENT MINIMUM	REQUIREMENT MAXIMUM	UNITS	ACTUAL READING	
5.1.5.4	Load and Efficiency- With Controller					
#4	TEST "A" (No Load)					
	1) Residual Voltage					
	T_1-T_2	---	---	VAC	5.7	
	T_1-T_3	---	---	VAC	5.7	
	T_3-T_2	---	---	VAC	5.7	
	2) Alternator Speed	33,400	34,000	RPM	33700	
	3) Torque	---	---	IN-LBS.	.14	
	4) Housing Pressure	21	---	In.Hg.	23.0	
	5) Winding Temperatures					
	TC_1	130	275	°F	210	A
	TC_2	180	275	°F	213	A
	TC_3	180	275	°F	211	A
	TC_4	180	275	°F	212	A
	6) Cooling Oil Flow	---	---	GPM	(2ST) .69	
	7) Cooling Oil Temperature	150	230	°F	201	
	8) Cooling Oil Out Temperature	---	---	°F	198	A

.... NOTE ....
TS, MODEL NUMBER AND SERIAL NUMBER MUST APPEAR ON EVERY PAGE
RETAIN ONE COPY OF THIS DATA SHEET FOR QA FILE

Sundstrand Advanced Technology Operations
unit of Sundstrand Corporation
4747 HARRISON AVENUE, ROCKFORD, IL 61101

TEST RECORD–CONTINUATION

PAGE NO. 129

TEST SPEC: 2538 REV. A

MODEL NO. ORC1A3A01 SERIAL NO. 002 DATE 3-23-78 DATA SHEET 113 OF 120

PROCEDURE PARAGRAPH NUMBER	PARAMETER DESCRIPTION	REQUIREMENT MINIMUM	REQUIREMENT MAXIMUM	UNITS	ACTUAL READING	
5.1.5.4	Load and Efficiency- With Controller		--			
#4	TEST "B" (2000 Watts)					
	1) Three Phase Voltage					
	T_1-T_2	---	---	VAC	24.8	
	T_1-T_3	---	---	VAC	24.8	
	T_3-T_2	---	---	VAC	24.5	
	2) Three Phase Amps (AC)					
	Phase 1	---	---	Amps	61.2	
	Phase 2	---	---	Amps	61.4	
	Phase 3	---	---	Amps	61.3	
	3) Three Phase Watts (AC)					
	W_1	---	---	Watts	1162	
	W_3	---	---	Watts	1410	
	4) Field Voltage	---	---	VDC	10.8	
	5) Field Current	---	2.5	Amps	2.2	A
	6) Alternator Speed	33,400	34,000	RPM	33200	
	7) Torque	---	---	IN.LBS.	7.21	
	8) Housing Pressure	21	---	In.Hg.	23.0	
	9) Winding Temperatures					
	TC_1	180	275	°F	213	A
	TC_2	180	275	°F	215	A
	TC_3	180	275	°F	214	A
	TC_4	180	275	°F	215	A
	10) Cooling Oil Flow	---	---	GPM	(257) .68	
	11) Cooling Oil Temperature	150	230	°F	194	
	12) DC Volts	27.5	28.5	Volts	27.8	
	13) DC Amps	70.2	72.8	Amps	71.2	
	14) Cooling Oil Out Temperature	---	---	°F	191	A

.... NOTE ....
TS, MODEL NUMBER AND SERIAL NUMBER MUST APPEAR ON EVERY PAGE
RETAIN ONE COPY OF THIS DATA SHEET FOR QA FILE

MODEL NO. ORC1A3A01 SERIAL NO. 002 DATE 3-23-78 DATA SHEET 114 OF 120

PROCEDURE PARAGRAPH NUMBER	PARAMETER DESCRIPTION	REQUIREMENT MINIMUM	REQUIREMENT MAXIMUM	UNITS	ACTUAL READING	
5.1.5.4	Load and Efficiency- With Controller					
#5	TEST "A" (No Load)					
	1) Residual Voltage					
	T_1-T_2	---	---	VAC	5.6	
	T_1-T_3	---	---	VAC	5.6	
	T_3-T_2	---	---	VAC	5.6	
	2) Alternator Speed	33,400	34,000	RPM	33700	
	3) Torque	---	---	IN-LBS.	.11	
	4) Housing Pressure	21	---	In.Hg.	23.0	
	5) Winding Temperatures					
	TC_1	180	275	°F	209	A
	TC_2	180	275	°F	211	A
	TC_3	180	275	°F	209	A
	TC_4	180	275	°F	211	A
	6) Cooling Oil Flow	---	---	GPM	(262) .71	
	7) Cooling Oil Temperature	150	230	°F	217	
	8) Cooling Oil Out Temperature	---	---	°F	208	A

.... NOTE ....
TS, MODEL NUMBER AND SERIAL NUMBER MUST APPEAR ON EVERY PAGE
RETAIN ONE COPY OF THIS DATA SHEET FOR QA FILE

Sundstrand Advanced Technology Operations
unit of Sundstrand Corporation
4747 HARRISON AVENUE, ROCKFORD, IL 61101

TEST RECORD–CONTINUATION

PAGE NO. 131

TEST SPEC: 2538 REV. A

MODEL NO. ORC1A3A01 SERIAL NO. 002 DATE 3-23-78 DATA SHEET 115 OF 120

PROCEDURE PARAGRAPH NUMBER	PARAMETER DESCRIPTION	REQUIREMENT MINIMUM	REQUIREMENT MAXIMUM	UNITS	ACTUAL READING	
5.1.5.4	Load and Efficiency- With Controller		--			
#5	TEST "B" (2000 Watts)					
	1) Three Phase Voltage					
	T_1-T_2	---	---	VAC	25.0	
	T_1-T_3	---	---	VAC	25.0	
	T_3-T_2	---	---	VAC	25.1	
	2) Three Phase Amps (AC)					
	Phase 1	---	---	Amps	61.2	
	Phase 2	---	---	Amps	61.2	
	Phase 3	---	---	Amps	61.1	
	3) Three Phase Watts (AC)					
	W_1	---	---	Watts	1164	
	W_3	---	---	Watts	1413	
	4) Field Voltage	---	---	VDC	10.7	
	5) Field Current	---	2.5	Amps	2.2	A
	6) Alternator Speed	33,400	34,000	RPM	33700	
	7) Torque	---	---	IN.LBS.	7.18	
	8) Housing Pressure	21	---	In.Hg.	23.0	
	9) Winding Temperatures					
	TC_1	180	275	°F	213	A
	TC_2	180	275	°F	216	A
	TC_3	180	275	°F	215	A
	TC_4	180	275	°F	215	A
	10) Cooling Oil Flow	---	---	GPM	(253) .69	
	11) Cooling Oil Temperature	150	230	°F	196	
	12) DC Volts	27.5	28.5	Volts	27.9	
	13) DC Amps	70.2	72.8	Amps	71.4	
	14) Cooling Oil Out Temperature	---	---	°F	194	A

.... NOTE ....
TS, MODEL NUMBER AND SERIAL NUMBER MUST APPEAR ON EVERY PAGE
RETAIN ONE COPY OF THIS DATA SHEET FOR QA FILE

Sundstrand
Advanced Technology
Operations
unit of Sundstrand Corporation
4747 HARRISON AVENUE, ROCKFORD, IL 61101

TEST RECORD—CONTINUATION

TEST SPEC: 2538 REV. A

MODEL NO. ORC1A3A01 SERIAL NO. 002 DATE 3-23-78 DATA SHEET 116 OF 120

PROCEDURE PARAGRAPH NUMBER	PARAMETER DESCRIPTION	REQUIREMENT MINIMUM	REQUIREMENT MAXIMUM	UNITS	ACTUAL READING	
5.1.5.4	Load and Efficiency- With Controller					
#6	TEST "A" (No Load)					
	1) Residual Voltage					
	T_1-T_2	---	---	VAC	5.5	
	T_1-T_3	---	---	VAC	5.5	
	T_3-T_2	---	---	VAC	5.5	
	2) Alternator Speed	33,400	34,000	RPM	33700	
	3) Torque	---	---	IN-LBS.	.15	
	4) Housing Pressure	21	---	In.Hg.	22.0	
	5) Winding Temperatures					
	TC_1	180	275	°F	212	A
	TC_2	180	275	°F	213	A
	TC_3	180	275	°F	211	A
	TC_4	180	275	°F	213	A
	6) Cooling Oil Flow	---	---	GPM	(247) .67	
	7) Cooling Oil Temperature	150	230	°F	194	
	8) Cooling Oil Out Temperature	---	---	°F	192	

.... NOTE ....
TS, MODEL NUMBER AND SERIAL NUMBER MUST APPEAR ON EVERY PAGE
RETAIN ONE COPY OF THIS DATA SHEET FOR QA FILE

Sundstrand
Advanced Technology
Operations
unit of Sundstrand Corporation
4747 HARRISON AVENUE, ROCKFORD, IL 61101

TEST RECORD–CONTINUATION

TEST SPEC: 2538 REV. A

MODEL NO. ORC1A3A01 SERIAL NO. 002 DATE 3-23-78 DATA SHEET 117 OF 120

PROCEDURE PARAGRAPH NUMBER	PARAMETER DESCRIPTION	REQUIREMENT MINIMUM	REQUIREMENT MAXIMUM	UNITS	ACTUAL READING
5.1.5.4	Load and Efficiency- With Controller		--		
#6	TEST "B" (2000 Watts)				
	1) Three Phase Voltage				
	T_1-T_2	---	---	VAC	25.0
	T_1-T_3	---	---	VAC	24.9
	T_3-T_2	---	---	VAC	24.9
	2) Three Phase Amps (AC)				
	Phase 1	---	---	Amps	61.0
	Phase 2	---	---	Amps	61.0
	Phase 3	---	---	Amps	60.9
	3) Three Phase Watts (AC)				
	W_1	---	---	Watts	1165
	W_3	---	---	Watts	1415
	4) Field Voltage	---	---	VDC	10.8
	5) Field Current	---	2.5	Amps	2.2
	6) Alternator Speed	33,400	34,000	RPM	33700
	7) Torque	---	---	IN.LBS.	7.15
	8) Housing Pressure	21	---	In.Hg.	23.0
	9) Winding Temperatures				
	TC_1	180	275	°F	216
	TC_2	180	275	°F	218
	TC_3	180	275	°F	217
	TC_4	180	275	°F	218
	10) Cooling Oil Flow	---	---	GPM	(253) .69
	11) Cooling Oil Temperature	150	230	°F	205
	12) DC Volts	27.5	28.5	Volts	28.0
	13) DC Amps	70.2	72.8	Amps	71.3
	14) Cooling Oil Out Temperature	---	---	°F	199

.... NOTE ....
TS, MODEL NUMBER AND SERIAL NUMBER MUST APPEAR ON EVERY PAGE
RETAIN ONE COPY OF THIS DATA SHEET FOR QA FILE

Sundstrand
Advanced Technology
Operations
unit of Sundstrand Corporation
4747 HARRISON AVENUE, ROCKFORD, IL 61101

TEST RECORD–CONTINUATION

TEST SPEC: 2538 REV. A

MODEL NO. ORC1A3A01 SERIAL NO. 002 DATE 3-23-78 DATA SHEET 118 OF 120

PROCEDURE PARAGRAPH NUMBER	PARAMETER DESCRIPTION	REQUIREMENT MINIMUM	REQUIREMENT MAXIMUM	UNITS	ACTUAL READING	
5.1.5.4	Load and Efficiency- With Controller					
#7	TEST "A" (No Load)					
	1) Residual Voltage					
	T_1-T_2	---	---	VAC	5.7	
	T_1-T_3	---	---	VAC	5.7	
	T_3-T_2	---	---	VAC	5.7	
	2) Alternator Speed	33,400	34,000	RPM	33700	
	3) Torque	---	---	IN-LBS.	.10	
	4) Housing Pressure	21	---	In.Hg.	23.0	
	5) Winding Temperatures					
	TC_1	180	275	°F	213	A
	TC_2	180	275	°F	215	A
	TC_3	180	275	°F	213	A
	TC_4	180	275	°F	214	A
	6) Cooling Oil Flow	---	---	GPM	(265) .72	
	7) Cooling Oil Temperature	150	230	°F	213	
	8) Cooling Oil Out Temperature	---	---	°F	207	A

.... NOTE ....
TS, MODEL NUMBER AND SERIAL NUMBER MUST APPEAR ON EVERY PAGE
RETAIN ONE COPY OF THIS DATA SHEET FOR QA FILE

Sundstrand
Advanced Technology
Operations
unit of Sundstrand Corporation
4747 HARRISON AVENUE, ROCKFORD, IL 61101

TEST RECORD–CONTINUATION

TEST SPEC: 2538 REV. A

MODEL NO. ORC1A3A01 SERIAL NO. 002 DATE 3-23-78 DATA SHEET 119 OF 120

PROCEDURE PARAGRAPH NUMBER	PARAMETER DESCRIPTION	REQUIREMENT MINIMUM	REQUIREMENT MAXIMUM	UNITS	ACTUAL READING	
5.1.5.4	Load and Efficiency- With Controller					
#7	TEST "B" (2000 Watts)					
	1) Three Phase Voltage					
	T_1-T_2	---	---	VAC	24.9	
	T_1-T_3	---	---	VAC	24.9	
	T_3-T_2	---	---	VAC	24.9	
	2) Three Phase Amps (AC)					
	Phase 1	---	---	Amps	61.3	
	Phase 2	---	---	Amps	61.3	
	Phase 3	---	---	Amps	61.1	
	3) Three Phase Watts (AC)					
	W_1	---	---	Watts	1164	
	W_3	---	---	Watts	1409	
	4) Field Voltage	---	---	VDC	10.9	
	5) Field Current	---		Amps	2.2	
	6) Alternator Speed	33,400	34,000	RPM	33200	
	7) Torque	---	---	IN.LBS.	2.15	
	8) Housing Pressure	21	---	In.Hg.	23.0	
	9) Winding Temperatures					
	TC_1	180	275	°F	215	A
	TC_2	180	275	°F	218	A
	TC_3	180	275	°F	216	A
	TC_4	180	275	°F	217	A
	10) Cooling Oil Flow	---	---	GPM	(253) .69	
	11) Cooling Oil Temperature	150	230	°F	198	
	12) DC Volts	27.5	28.5	Volts	27.9	
	13) DC Amps	70.2	72.8	Amps	71.4	
	14) Cooling Oil Out Temperature	---	---	°F	195	A

.... NOTE ....
TS, MODEL NUMBER AND SERIAL NUMBER MUST APPEAR ON EVERY PAGE
RETAIN ONE COPY OF THIS DATA SHEET FOR QA FILE

Sundstrand Advanced Technology Operations
unit of Sundstrand Corporation
4747 HARRISON AVENUE, ROCKFORD, IL 61101

TEST RECORD—CONTINUATION

PAGE NO. 136

TEST SPEC: 2538 REV. A

MODEL NO. ORC1A3A01 SERIAL NO. 002 DATE 3-28-78 DATA SHEET 120 OF 120

PROCEDURE PARAGRAPH NUMBER	PARAMETER DESCRIPTION	REQUIREMENT MINIMUM	REQUIREMENT MAXIMUM	UNITS	ACTUAL READING
5.1.6	Dielectric Test				
	1) Phase leads to frame	---	15	ma	0.5
	2) Field leads to frame	---	15	ma	0.15
5.1.7	Insulation Resistance				
	1) Phase leads - 25 VDC	10	---	Megohms	2×10^6
	2) Phase leads - 50 VDC	10	---	Megohms	3×10^5
	3) Phase leads - 100 VDC	10	---	Megohms	2.5×10^5
	4) Phase leads - 250 VDC	10	---	Megohms	2.2×10^5
	5) Phase leads - 500 VDC	10	---	Megohms	2×10^5
	1) Field leads - 25 VDC	10	---	Megohms	1.3×10^5
	2) Field leads - 50 VDC	10	---	Megohms	1.3×10^5
	3) Field leads - 100 VDC	10	---	Megohms	1.4×10^5
	4) Field leads - 250 VDC	10	---	Megohms	1.3×10^5
	5) Field leads - 500 VDC	10	---	Megohms	1.3×10^5

.... NOTE ....
TS, MODEL NUMBER AND SERIAL NUMBER MUST APPEAR ON EVERY PAGE
RETAIN ONE COPY OF THIS DATA SHEET FOR QA FILE