GEFR-SP 222

DATE August 1980

CONF-801036--5

TITLE: STRESS CORROSION IN LIQUID METAL FAST BREEDER REACTOR SYSTEMS - LMFBR

AUTHORS: P.J. Ring, C.N. Spalaris, T.K. Odegaard and H.P. Offer

Prepared for presentation at

ANS Topical Conference on Materials
Performance in Nuclear Steam Generators
Conference

MASTER

Held in St. Petersburg, Florida
City, State

On October 6-9, 1980
Date

This paper contains material
resulting from work performed
for U.S. Department of Energy

Under Contract No. DE-AT03-76SF70030

Under DA__________________

ADVANCED REACTOR SYSTEMS DEPARTMENT • GENERAL ELECTRIC COMPANY
SUNNYVALE, CALIFORNIA 94086

GENERAL ELECTRIC

STRESS CORROSION IN LIQUID METAL FAST BREEDER REACTOR SYSTEMS - LMFBR

P.J. Ring, C.N. Spalaris, T.K. Odegaard and H.P. Offer
General Electric Company
Advanced Reactor Systems Department
175 Curtner Avenue
San Jose, CA 95125

P.J. Ring
(408) 925-2330
Mail Code 513

Total pages of text = 23
Total number of tables = 3
Total number of figures = 9

TABLES

FIGURES

STRESS CORROSION IN LIQUID METAL FAST BREEDER REACTOR SYSTEMS - LMFBR

P.J. Ring, C.N. Spalaris and T.K. Odegaard
General Electric Company
Advanced Reactor Systems Department
175 Curtner Avenue, M/C 513
San Jose, CA 95125

ABSTRACT

To a large extent, stress corrosion problems are minimized in the case of LMFBR's, because in the reactor core and intermediate heat transport system, the heat transfer medium is sodium. However, the steam generator system and ancillary systems where water is involved, introduce the problem of caustic corrosion.

There are two principal areas where effort has been concentrated in investigating the risk potential for stress corrosion, and approaches to reduce that risk. These areas are:

(1) Steam generator modules, especially the tube-to-tubesheet (T/TS) region, and

(2) The Sodium Water Reaction Products System (SWRPRS).

Work has been carried out to determine the degree of reduced SCC susceptibility obtained by the use of remelted rather than air melted 2¼Cr-1Mo steel. Both Vacuum Arc Remelt (VAR) and Electro Slag Remelt (ESR) material have been evaluated. This work has consisted of the testing of 2¼Cr-1Mo specimens in 10% and 20% sodium hydroxide at

(2¼Cr-1Mo)

(2¼Cr-1Mo)

232°C (450°F), using an autoclave system with a tensile loading capability.

The work has continued into an evaluation of stress corrosion resistance as a function of post weld heat treatment (PWHT) and as a function of the extent of weld repair by remelting.

The second area where attention has been focused is the Sodium Water Reaction Products System (SWRPRS). In the eventuality of a steam generator water leak and the resultant sodium-water reaction, this system is designed to accept the mixture of water-sodium and concomitant reaction products. Methods are now being developed to evaluate the risk of stress corrosion cracking (caustic embrittlement) and to permit requalification of the system.

Specially designed specimen holders have been installed in the SWRP system at the Energy Technology Engineering Center (ETEC). This system is connected to the Large Leak Test Vessel (LLTV) which will be used to provide data on the effects of large water leaks in LMFBR steam generator systems. Prototypical materials representing those alloys used for the sodium-water reaction products system are being exposed to determine whether stress corrosion causing conditions are likely to exist after a large leak. Base material, welded, welded and post weld heat treated samples are being evaluated. In addition, critical regions of the system piping have been ultrasonically inspected to provide baseline data. These regions will be reinspected following each sodium-water reaction event.

I. INTRODUCTION

Stress corrosion cracking is one of the most serious failure mechanisms for components in the power industry. Failures in BWR piping systems and PWR feedwater nozzles are very familiar, and the problems of austenitic steels in conventional plants and in the oil refining industry are well known. Experience with Liquid Metal Fast Breeder Reactor systems (LMFBR's) is much less extensive, but stress corrosion failures experienced for 2¼Cr-1Mo steel in the Fermi and PFR steam generators testify that the LMFBR systems are not invulnerable.

(2¼Cr-1Mo)

Attempts have been and are being made to reduce the probability of stress corrosion cracking (SCC) in LMFBR systems. The most critical and susceptible regions of the steam generator are the tube-to-tubesheet (T/TS) welds. The most serious risk of SCC of these joints occurs as a result of a small initial leak due to fabrication defects, such as inclusions, weld porosity and weld cracking. The first line of defense, therefore, is to minimize this risk. Prevention can take three paths:

(1) *Double barriers*, such as double walled tubing and double welds requiring *both* barriers to fail before a sodium-water reaction occurs.

(2) *High quality*; this means extremely tight specifications for the material, fabrication processes and inspection procedures.

(3) Avoidance of tube/tubesheet welds at the water-sodium interface through appropriate design.

In the case of the Clinch River Breeder Reactor (CRBR), the second approach was taken; the specifications and quality control methods have been discussed elsewhere.(1) The purpose of this paper is to present the results and conclusions of the stress corrosion testing of these tube-to-tubesheet welds.

A second area of potential SCC risk is the Sodium-Water Reaction Products System (SWRPRS). Following a serious leak and subsequent sodium-water reaction, a rupture disc bursts expelling the sodium-water and reaction products into the SWRPRS. Since the sodium and water are continually reacting, sodium hydroxide will be generated, but the lifetime of any hydrated NaOH will be short. The uncertainty is: Will the conditions be such that stress corrosion cracking of this system is a real possibility for CRBR, since before SCC can occur, the appropriate conditions of exposure, time, temperature, stress and chemical environment must all be present.

(NaOH)

Sodium-water reaction products (SWRP) nominally consists of unreacted sodium, sodium hydroxide, sodium oxide, sodium hydride and hydrogen. It is generally supposed that any free water is rapidly reacted with free sodium; therefore, hydrated sodium hydroxide could not exist for very long in a SWRP system. Laboratory experiments have shown that 2¼Cr-1Mo steel exhibits susceptibility to SCC in sodium hydroxide solutions ranging from 4 to 75% (2,3) over a relatively narrow range of electrode potentials (on the order of 200 mv), and over a range of temperatures. (4,5,6) The question is: Will those conditions or combination of conditions exist in the CRBR SWRPRS?

(2¼Cr-1Mo)

The SCC phenomena is so inadequately understood, and the synergistic effects of the various conditions so difficult to define, that extrapolation of laboratory tests to industrial plant conditions is difficult; in this case, it is much worse in that the range of conditions and environments likely to exist in a SWRPRS cannot even be defined. For this reason, it was decided that the only meaningful testing would be tests carried out in an actual SWRPRS. This paper discusses this in-situ test approach and the results to date.

II. STRESS CORROSION TESTING OF STEAM GENERATOR WELDS

A series of tests were performed on fully prototypic welds manufactured for the Clinch River Breeder Reactor Steam Generator System. The welds were taken both from a pre-production process demonstration run (termed "300 Series"), and from "off the line" start-of-shift welds used to demonstrate process control during fabrication. All of these welds were fabricated from remelt material since remelt material was selected for both the tubing (electroslag remelt or ESR) and the tubesheet (vacuum arc remelt or VAR). The remelt material was expected to reduce tubing and tubesheet inclusions and weld inclusions, and -- by minimizing tramp elements -- to reduce the degree of temper embrittlement, creep embrittlement and stress relief cracking. Welds repaired by manual welding and re-fusing (remelting) were included in the test program. Some air melt welds were also tested, since welds fabricated early in the program (before remelt material was available) were made from air melt material.

A full range of testing was carried out, such as flexural fatigue, biaxial creep, uniaxial creep, tensile and burst tests, in addition to nondestructive characterization -- microfocus rod anode, dye penetrant, ultrasonic examination and metallographic characterization. This paper will concentrate, however, on the stress corrosion susceptibility of the welds, since -- given a good weld to begin with -- the specimens invariably failed in the base metal in all tests except stress corrosion. [NOTE: It is to be noted, however, that all mechanical tests were of short duration when compared to 30-year design lifetime for the steam generator components.]

Stress corrosion testing was carried out under constant load in an autoclave (Fig. 1). Both tensile and U-bend specimens were used. Specimens for all tests were cut from the tube-to-tubesheet welds as illustrated in Figure 2. Three tensile specimen segments or four U-bend segments could be obtained from each weld. The test environment was 20% sodium hydroxide at a temperature of 232°C (450°F). Stresses ranged from 279 to 413 Mpa, i.e., from about 50% to 100% of the weld (Mpa)
metal yield stress.

Results from some of these tests are given in Table I and several observations can be made:

- Welds made from air melt material failed in 20% NaOH at 232°C (NaOH)
(450°F) -- whether the welds were post weld heat treated (PWHT) or not. Five out of six specimens failed, an 83% failure rate.

- No welds made from remelt material and PWHT have failed. Although not reported in detail here, sixty specimens with PWHT have been tested; none of the welds have failed.

- Even without PWHT, fewer welds made with remelt material (ESR and VAR) have failed. Fifteen out of thirty-one; a 48% failure rate.

- VAR material is apparently superior to ESR material in that no VAR welds, i.e., welds made with VAR material welded to VAR material (VAR/VAR) failed even when not PWHT. Several remelt material heats (both VAR and ESR) have been tested and the behavior is consistently better than air melt material.

- For ESR/VAR welds, when failure occurs in the heat affected zone (HAZ), it is typically on the ESR side.

The fact that the remelted steels -- with lower impurity levels -- are apparently more resistant to SCC than air melt materials, suggested a relationship between SCC and trace elements. This, in turn, suggests a relationship between SCC and other phenomena dependent on trace impurities, such as temper embrittlement, creep embrittlement and stress relief cracking or weld reheat cracking. This behavior was first observed in 1978. (7) Since that time, further work and study of the literature has shown that other investigators (8,9,10) have found a similar correlation. The tramp elements commonly considered aggressive in terms of embrittlement phenomena mentioned above (11,12,13) are P, Sb, Sn, As. In fact, Bruscato (14) defined a parameter he considered controlling in temper embrittlement as: (P,Sb,Sn,As)

$$\text{Embrittling factor} = \frac{10P+5Sb+4Sn+As}{100} \qquad (1)$$

P, Sb, Sn, As in w/o

As a first approach, it is reasonable to assume a similar correlation in the case of SCC, which would indicate phosphorus as the most powerful agent, with both antimony and tin contributing significantly. That the contribution of Sb and Sn (or, in fact, some other unidentified (Sb, Sn) element) may indeed be significant in SCC can be deduced from the following: The VAR material was more resistant to SCC than ESR material, yet neither the ESR nor the VAR processes are effective in removing phosphorus. This element must be removed by formation of a basic slag during primary melting. In fact, for the several heats of material examined, phosphorus content was quite similar for ESR and VAR. The VAR process <u>does</u>, however, remove both As and Sn (Fig. 3), (As,Sn) which may account for the better performance of the VAR material.

<u>Any</u> element with a low solid solubility must be viewed with suspicion. Sulfur, for example, would be expected to exert a strong effect; however, two factors suggest that sulfur is not effective:

(1) The ESR process removes sulfur, the VAR does not; yet the VAR material is more resistant to SCC.

(2) From thermodynamic considerations, all the sulfur should be combined with the manganese as MnS inclusions and, thus, prevented (MnS) from collecting at the grain boundaries.

II.A Mechanism Effecting SCC Susceptibility

A reasonable mechanism by which trace elements may influence the rate of SCC could be as follows: Since the solubility of all these tramp elements is low, their presence causes a distortion of the lattice, which promotes diffusion and segregation of these elements to the grain boundaries and a net reduction in free energy. Heating the alloy below approximately 650°C (1202°F) provides additional energy to accelerate this diffusion process. Conversely, as the temperature increases above 650°C and approaches the Ac_1 phase transformation temperature, the lattice structure at the grain boundaries becomes less stable and the tramp elements are displaced from the grain boundaries. The presence of absorbed solute atoms at the grain boundary reduces the energy needed for crack initiation and propagation. In a chemical environment, this phenomenon may well act in conjunction with an electrochemical effect. The grain boundaries already provide a disrupted region; a monolayer of phosphorus or another element would be expected to substantially increase electrochemical activity and the rate of grain boundary dissolution.

(Ac_1)

That the purely mechanical contribution is considerable, can be concluded from the effect of remelting on something as easily measured as the ductile brittle transition temperature, as given by RT_{NDT}. [For the remelted CRBR tubesheet material, this value was 0°C; for the air melted shell plate, about 65°C.]

(RT_{NDT})

An aspect which is not at all clear is the synergistic effects of elements in combination, in that J. R. Low et al (15) showed that the effectiveness of an embrittling agent in a particular steel was also a function of other alloying elements, such as nickel and chromium, for example. Tin and antimony are much more embrittling in NiCr steels than in plain chromium or plain nickel steels. Further, it should be noted that embrittlement (temper) does not occur at all in plain carbon steels, even when a large amount of the embrittling

(NiCr)

agent is present. From this, it would appear that although certain conclusions can be drawn, much remains to be discovered.

II.B Effect of Post Weld Heat Treatment

If we continue the correlation between temper embrittlement and stress corrosion cracking susceptibility, it is clear that PWHT will substantially reduce the propensity for SCC, not only by the normally accepted phenomena -- tempering of hard bainitic and martensitic microstructures and reduction of residual weld stresses -- but also by de-embrittling the steel by promoting diffusion of the deleterious elements away from the grain boundaries.

An interesting corollary to the above conclusion is that, after welding, the weld itself will have a relatively low concentration of grain boundary trace elements, since the temperature was well above the melting point. Regions in the HAZ, however, would certainly be in the prime temperature regime to promote embrittlement. This, in turn, suggests that repeated re-fusing or remelting of the weld, for example, to repair the weld, should substantially increase the degree of embrittlement, since it increases the time the HAZ material is held at the embrittling temperature. This, of course, becomes less significant if the weld is post weld heat treated.

II.B.1. Localized PWHT Considerations

It also follows from the above that localized PWHT may be deleterious, or at least less satisfactory than bulk PWHT, in that regions on either side of the weld would be heat treated precisely within the embrittling range. In this light, it is interesting to study Table II and note that re-fused welds and welds post weld heat treated by the localized PWHT method show a higher failure rate in the base metal away from the weld than non-repaired welds and welds given a bulk PWHT. Although the data are yet insufficient, the trend is in the direction one would logically expect.

II.C. Other Methods to Improve SCC Resistance

If the conclusions we have advanced are correct -- that SCC and temper embrittlement are related in that both are greatly enhanced by the presence of tramp elements and that by remelting and removal of tramp elements P, Sb, Sn and As, 2¼Cr-1Mo steel substantially increases resistance to both stress corrosion and the embrittling phenomena -- then it is reasonable to conclude that further refinement may further increase SCC resistance. However, it may be cheaper and easier to follow the approach already taken to reduce temper embrittlement susceptibility; that is, by the addition of rare earth metals such as Lanthanum. (16) An addition of La would precipitate phosphorus as LaP and, importantly, also precipitate tin. Work in this direction has, in fact, already been undertaken. (10)

(P,Sb,Sn,As)
(2¼Cr-1Mo)
(La)
(LaP)

II.D Conclusions

(1) Welds made with remelted 2¼Cr-1Mo have improved resistance to stress corrosion cracking (SCC) compared with welds made with conventional air melted material.

(2¼Cr-1Mo)

(2) Vacuum Arc Remelted (VAR) material was superior in this respect to Electroslag Remelted (ESR) material.

(3) SCC in 2¼Cr-1Mo appears to bear a relationship to embrittlement phenomena, such as temper embrittlement and weld reheat cracking. Both appear to be a function of tramp elements present at the grain boundaries.

(2¼Cr-1Mo)

(4) Given the temper embrittlement/SCC relationship, heating in the temper embrittlement temperature regime, 480-650°C without a subsequent higher temperature heat treatment, can be expected to increase susceptibility to SCC. This implies that a weld HAZ and also base metal adjacent to welds locally post weld heated might be expected to show increased susceptibility to SCC.

(5) Rare earth (e.g., Lanthanum) additions to 2¼Cr-1Mo should be considered and further investigated as a method to precipitate phosphorus and tin, reduce embrittlement and substantially improve SCC resistance.

(2¼Cr-1Mo)

III. STRESS CORROSION IN A SWRP SYSTEM

That stress corrosion can occur under certain conditions of exposure to sodium-water reaction products (SWRP) is certain. Stress corrosion cracking has been experienced as a result of a BN350 SWRP incident and at the Energy Technology Engineering Center (ETEC) facility during the Series I large leak tests. (Figs. 4 and 5) In both these incidents, however, the alloy involved was an austenitic stainless steel and, although information concerning the first incident is sparse, in the second case, it is highly possible that a nitrogen "blanket" was not continuously maintained. Thus, if at some time 'wet' air entered the system, any sodium hydroxide on the pipe walls would deliquesce, producing prime conditions for stress corrosion cracking.

There is no doubt, therefore, that SCC of austenitic stainless steel can occur in a SWRP system. It, however, is not clear that the conditions will exist to cause cracking of carbon steel under the limits of SWR exposure predicted for CRBR. If data were available to define the envelope under which caustic SCC will occur in a SWRPRS environment (i.e., to show that SCC and the consequent development of a potential safety hazard are not likely to occur in the carbon steels selected for use in the SWRPRS components), then a modest program of inspection of critical areas of the relief system would suffice to permit requalification subsequent to an incident.

III.A. Description of the Development Program

In the development of a program to determine the caustic SCC susceptibility of SWRPRS materials, several alternate approaches were considered. The simplest approach involved the use of conventional stress corrosion specimens (fixed displacement U-bend coupons) subjected to an artificially produced SWRP environment. In another approach, stress corrosion specimens would be inserted into an actual SWRPRS, subjected to a number of full scale incidents and monitored for caustic SCC. A more involved test would call for the construction of a scale model simulated CRBRP-SWRPRS.

In all of these approaches, the issue of primary concern is the correspondence between the test (and test results) and a typical CRBRP steam generator large leak event. Specifically, we must be certain that the tests accurately simulate the conditions which would be present during an actual SWR incident. The concern arises because of the complex and imprecisely determined nature of the SWRP. The composition of these products is a function of the particular incident (temperature and pressure conditions), relative volumes of water/steam and sodium, and the geometry of the SWRPRS. Indeed, in the same system, one incident may well produce SWRP which differ substantially from those produced during a different incident. Thus, we are at a loss to forecast the precise composition of SWRP and, consequently, its effects on the system.

The obvious solution to this dilemma would be to construct a complete full scale SWRPRS and subject it to a number of SWR incidents, all the while monitoring the system for SCC. This is clearly not practical. The next best approach would be to construct a scale model system and evaluate for SCC as indicated above. This approach was also rejected on the basis of cost and because it possesses little advantage over the next best alternative, which is to utilize an existing SWRP system and ensure that, as much as possible, the conditions of the test simulate project worst case conditions in the CRBRP-SWRPRS during a SWR incident, and provide for inspection of that test system by all means possible. Accordingly, the Large Leak Test Rig (LLTR) at ETEC, whose lower relief line simulates the CRBRP system, was selected as the vehicle for conducting these tests. This approach is considered to be the best route to generate a case for the requalification of the CRBRP-SWRPRS.

A description of the test program is as follows: The LLTR facility at ETEC is to be used to evaluate the effects of varying size leaks on a sodium steam generator. The 'leaks' are artificially induced by causing one or more tubes to fail. The location, size and duration of the leak is varied, and the effects of each leak on the system is evaluated; for example, tube wastage and tube bowing in the surrounding tubes. From the point of view of stress corrosion, the most dangerous situation is a leak followed by a continuing flow of water. The sodium-water reaction products are driven by the pressure pulse into the SWRP system, through, and into the Reaction Products Separator Tank (RPST), presumably leaving small amounts of sodium and sodium hydroxide lodged in crevices in the system. Water/steam continuing to flow into the system will form hydrated sodium hydroxide and cracking can occur. This type of leak will be simulated in the LLTR tests.

III.B Experimental Methods

To evaluate the risk of stress corrosion cracking in a CRBR-type SWRPRS, the following approaches are being followed:

(1) Insertion of fixed displacement U-bend coupons into the relief line piping (near the relief disc assembly as shown in Figure 6) and the RPST. Full details of the specimens are given in Section III.C.1.

(2) Inspection of the U-bend coupons, using liquid dye penetrant and stereo binocular microscope examination subsequent to each test.

(3) Provision of a method to obtain samples of SWRP from both the relief line port (near the relief disc assembly) and the RPST. The

SWRP can be analyzed at a later date, if it is deemed necessary and feasible. By analyzing SWRP taken from both locations, it may be possible to determine if a compositional evolution has occurred.

(4) Determination of the degree of simulation of the postulated worst case CRBRP incident as the tests proceed. Recommendations for additions or modifications to the test will be developed, if necessary, on the basis of initial test results.

(5) Non-destructive examination of selected sections of the relief system piping.

(6) Destructive and nondestructive examination of selected portions of the relief system piping at the conclusion of the Large Leak Test Program.

The results of the various examinations will compare the degree of correspondence between cracking of the U-bend specimens and the respective SWRPRS sections. This will establish whether U-bend specimens can be used as indicators, a sort of 'Litmus paper' in CRBRP to determine if the risk of SCC has been present during a particular incident.

III.C. Experimental Considerations

III.C.1. U-Bend Specimen Materials

U-bend coupons (fixed displacement) were fabricated according to ASTM G30-72. The preformed blanks have dimensions of 3.18 x 11.11 x
82.55 mm (1/8 x 7/16 x 3¼ inches) with a 0.76 μm (30 μin.) and 1.5 μm (μ, μ, μ)
(60 μin.) surface finish on the exposed face and sides, respectively. (μ)
The materials used for the LLTR-SWRP system are not prototypic of the

actual CRBRP-SWRPRS materials. For this reason, test specimens representative of CRBRP-SWRP materials have been placed in the LLTR-SWR system. A second consideration, of course, is that such specimens can be standardized in terms of stress and heat treatment and easily removed for examination. The main CRBRP relief lines are fabricated from SA155 (KCF60). The plate used to fabricate the piping is SA516, Grade 60, a fine grained carbon steel.

U-bend specimens have been fabricated using the welding procedures and filler metals expected to be used for the pipe field welds. Some were post weld heat treated (all field welds are to receive a PWHT at 593-677°C (1100-1250°F) for one hour), and others left in the as-welded condition. These specimens, along with unwelded SA516 U-bend coupons, have been introduced into the relief line piping, as described in Section III.C.2.

The CRBRP-RPST is fabricated from SA533 plate, Type A, Class 1. This is a manganese molybdenum composition steel for use in the quenched and tempered conditions.

Following welding, the tank was given a PWHT at 593-677°C (1100-1250°F) for one hour. SA533 material, both unwelded and welded plate (using the Shielded Metal Arc Welding (SMAW) procedure), has been obtained from the RPST manufacturer. U-bend coupons fabricated from post weld heat treated and non-post weld heat treated material, as well as unwelded material, have been attached to a specimen rack in the RPST (see Section III.C.3 for specimen insertion details).

In addition to using prototypic material in these tests, SS304 coupons have also been included. The higher SCC susceptibility of the austenitic material will serve as an indicator and will help to define or bracket the SWRP environment.

III.C.2. Relief Line Port

The test rack holding seventy two specimens is placed into a port built into the relief line near the rupture disc (Fig. 6). This location has the advantage of complementing the non-destructive examination of the piping adjacent to the rupture disc assembly.

Figure 7 shows the general orientation of the test rack in the pipeline; the 10° below horizontal orientation of the port will provide a means of ensuring that at least some of the U-bend coupons are wetted by the SWRP. A penetration is provided in the flange to allow for drainage of the SWRP just prior to the removal of the rack assembly. Figure 8 shows assembly of the rack into the pipe systems. The port is instrumented with thermocouples. In addition, a separate line has been provided to permit sampling of the system gas immediately after a SWRP incident to establish the moisture content of the gas in the system.

III.C.3. Reaction Products Tank Sample Station

The geometry of the RPST, as shown in Figure 6, requires a different type of test rack. Unlike the relief line port, there is adequate room for placing specimens. In fact, the settling of SWRP in the tank over a length of time dictates that the specimens be placed at intervals in depth. This necessitates the use of a long specimen rack reaching to the bottom of the tank.

The SWRP enters tangentially at high velocities into the tank. It will cause a whirlpool in the tank, but a four foot heel remaining from each previous test should reduce the amount of turbulence. The tank is drained to 1.22 m (4 feet) prior to each test. Up to 11,356 liters (3,000 gallons) of SWRP enter the tank during each test, raising the level by 1.82 m (6 feet). The RPST test rack is 8.4 m (27.5 feet) long. The U-bend specimens are attached by 6.3 mm (¼ inch) bolts to the lower 3.6 m (12 feet) which is a smaller diameter (∿5 cm) pipe. (∿) The large diameter pipe at the top imparts to the rack the strength required to resist the moment forces applied due to whirlpooling. A total of 100 test stations are included in the rack design. Thermocouples are attached to the rack at two locations.

III.D. Test Philosophy

It is expected that two major benefits will emerge from these tests:

(1) A determination of whether cracking is likely to occur in a CRBR-SWRP system.

(2) An evaluation of the effectiveness of groups of U-bend specimens as indicators or 'Litmus paper'. Both stainless steel and carbon steel specimens are being used. It is assumed, based upon earlier data (17,18,19) that austenitic stainless steel is more susceptible to stress corrosion than low alloy or carbon steel. Using this assumption, the following scenarios are possible:

(INSERT TABLE III HERE)

III.E. Results

None of the specimens exposed to the SWRPRS from the initial runs, show any indications of stress corrosion cracking. Examination of the specimens and evaluation of the data from the initial testing is still in progress.

REFERENCES

1. C. N. SPALARIS, K. O. CHALLENGER, D. DUTINA and P. J. RING, "Sodium Heated Steam Generators: Near Term and Projected Information Needs -- Ferritic Steels," British Nuclear Energy Conference, London (June 1977).

2. H. MAZILLE and H. H. UHLIG, "Effect of Temperature and Some Inhibitors on Stress Corrosion Cracking of Carbon Steels in Nitrate and Alkaline Solutions," Corrosion - NACE, 28, 11, 427 (November 1972).

3. J. E. REINOEHL and W. E. BERRY, Corrosion, 28, 151 (1972).

4. J. E. REINOEHL, "Natural Conditions for Caustic Cracking of a Mild Steel," Columbus Laboratories, Columbus, Ohio, Corrosion/72, Paper No. 62.

5. R. N. PARKINS, Paper E-3 presented at the Int. Conf. on SCC and Hydrogen Embrittlement of Iron Base Alloys, Unieux-Firminy, France (1973).

6. M. E. INDIG and N. J. HOFFMAN, "Effect of Heating Rate on Caustic Stress Corrosion Cracking," General Electric Report NEDO-12676, 77NED 167, Class 1 (March 1977). Presented at the NACE Conference, San Francisco, March 14-18, 1977, Paper No. 135.

7. C. N. SPALARIS, P. J. RING, R. E. DURAND and E. A. WRIGHT, "Welding for the CRBRP Steam Generators," British Nuclear Energy Society (BNES), London (1979).

8. I. L. WILSON and R. G. ASPDEN, "The Influence of Specimen Type and Heat Treatment on the Caustic Stress Corrosion Cracking of Some Stainless Steels," Corrosion-NACE, 32, 5 (May 1976).

9. K. L. MOLOZNIK, C. L. BRIANT and C. J. McMAHON, Jr., "The Effect of Grain Boundary Impurities on the Stress Corrosion Cracking of a Low Alloy Steel," Corrosion-NACE, 35, 7 (July 1979).

10. C. LEA, "Stress Corrosion Cracking and Temper Brittleness: Effect of Phosphorus Grain Boundary Segregation in a Low Alloy Steel," Metal Science, 107-112 (March 1980).

11. L. G. EMMER, C. D. CLAUSER and J. R. LOW, "Critical Literature Review of Embrittlement in $2\frac{1}{4}$Cr-1Mo Steel," WRC Bulletin No. 183, Welding Research Council, New York, N.Y. (May 1973).

12. C. L. BRIANT, H.C. FENG and C. J. McMahon, Jr., "Embrittlement of a 5 Pct. Nickel High Strength Steel by Impurities and Their Effect on Hydrogen-Induced Cracking," Metallurgical Transactions, 9A (May 1978).

13. R. A. SWIFT and H. C. ROGERS, "Embrittlement of $2\frac{1}{4}$Cr-1Mo Steel Weld Metal by Postweld Heat Treatment," Welding Research Supplement, 145-s to 153-s, 172-s (April 1973).

14. R. BRUSCATO, "Temper Embrittlement and Creep Embrittlement of $2\frac{1}{4}$Cr-1Mo Shielded Metal-Arc Weld Deposits," Welding Research Supplement, 148-s to 156-s (April 1970).

15. J. R. LOW, Jr, D. F. STERN, A. M. TURKALO and R. P. Laforce, "Alloy & Impurity Effects on Temper Brittleness of Steel," Trans. of Met. Soc. of AIME, 242 (January 1968).

16. M. P. SEAH, P. J. SPENCER and F. D. HONDROS, "Additive Remedy for Temper Brittleness," Metal Science, 307-314 (May 1979).

17. M. E. INDIG and N. J. HOFFMAN, "Effect of Heating Rate on Caustic Stress Corrosion Cracking," General Electric Report NEDO-12676 (March 1977).

18. G. J. LICINA and J. F. COPELAND, "A Review of $2\frac{1}{4}$Cr-1Mo Steel for Steam Generator Applications in the Clinch River Breeder Reactor," General Electric Report GEAP 20589 (October 1974).

19. M. E. INDIG, "Stress Corrosion Studies of LMFBR Steam Generator Materials," General Electric Report GEAP 12536 (August 1974).

Table I

(a) CONSTANT LOAD STRESS CORROSION TESTS

Temperature: Run Nos. 1, 2, and 3 - 232°C
Time: Run No. 1: 1 hour; Run No. 2: 1248 hours; Run No. 3: 1607 hours
Sodium hydroxide concentration: Run Nos. 1 and 2: 10%; Run No. 3: 20%

Sample Number	Stress MPa/Ksi	Material Combination[1]	Heat Treatment[2]	Total Exposure		Failure Time, Hrs.
				Run No.	Total Hours	
1529	414/60	AA	AW	1&2	1249	1.8
1530	414/60	AA	AW	1	1	<1
1531	414/60*	AA	AW	1,2&3	2856	No Failure
1538	414/60	EV	AW	1&2	1249	1.6
1539	414/60	EV	AW	1&2	1249	No Failure
1560	379/55	EV	AW	2	1607	No Failure
1563	379/55	EV	AW	3	1607	.067
1566	379/55	EV	AW	3	1607	No Failure
1540	379/55	EV	AW	1,2&3	2856	No Failure
1528	379/55	VV	AW	1,2&3	2856	No Failure
1526	379/55	VV	AW	1&2	1249	No Failure
1527	379/55	VV	AW	1&2	1249	No Failure
1533	379/55	AA	PWHT	1,2&3	2856	1627
1534	379/55	AA	PWHT	1	1	<1
1532	414/60	AA	PWHT	1	1	<1
1541	379/55	EV	PWHT	1,2&3	2856	No Failure
1542	379/55	EV	PWHT	1,2&3	2856	No Failure
1555	379/55	EV	PWHT	3	1607	No Failure
1556	379/55	EV	PWHT	3	1607	No Failure
1558	379/55	EV	PWHT	3	1607	No Failure
1561	379/55	EV	PWHT	3	1607	No Failure
1562	379/55	EV	PWHT	3	1607	No Failure
1564	379/55	EV	PWHT	3	1607	No Failure
1565	379/55	EV	PWHT	3	1607	No Failure
1543	344/50	EV	PWHT	2	1248	No Failure
1536	344/50	VV	PWHT	2	1248	No Failure
1535	379/55	VV	PWHT	1&2	1249	No Failure
1537	379/55	VV	PWHT	1&2	1249	No Failure

---

[1] Material combinations: V = Vacuum arc remelted; E = Electroslag remelted; A = Air melted.

[2] Heat treatments: AW = As-welded; PWHT-1 hour 727°C (1340°C), or as noted.

*The stress for specimen 1531 was varied for each test run, i.e., Run No. 1: 414 7 MPa; Run No. 2: 310 Mpa; Run No. 3: 377 MPa.

(b) U-BEND CAUSTIC STRESS CORROSION TESTS

20% NaOH, 232°C (450°F)
Exposure time: 1607 hours All Specimens ESR/VAR

Weld No.	Bend Type*	Heat Treatment**	Failure Location
1079A	Root	AW	Weld
1081A	Root	AW	HAZ
1083A	Root	AW	None
1082A	Root	AW	None
1086A	Face	AW	HAZ
1088A	Face	AW	HAZ
1092A	Face	AW	HAZ
1087A	Face	AW	HAZ
1081B	Root	PWHT	None
1083B	Root	PWHT	None
1082B	Root	PWHT	None
1079B	Root	PWHT	None
1088B	Face	PWHT	None
1086B	Face	PWHT	None
1092B	Face	PWHT	None
1087B	Face	PWHT	None

---

* Weld Root is tube OD. Weld Face is tube ID.

**Heat treatments: AW-As-welded; PWHT = 1 hour, 727°C (1340°F).

Table II

STRESS CORROSION TESTS (232°C, 20% NaOH)
RE-FUSED WELDS AND WELDS WITH LOCALIZED PWHT

(a) Constant Load (Tensile) Tests

Sample No.	Stress MPa/Ksi	Failure Time Hours	Failure Location	Exposure Time, Hrs
RM-3-2	138/20	-	-	169.0
RM-3-2	138/20	-	-	169.0
RM-4-3	207/30	-	-	169.0
RM-4-2	207/30	-	-	169.0
RM-1-1	276/40	-	-	169.0
RM-1-2	276/40	88.1	Base Metal	88.1
RM-2-1	276/40	73.3	Base Metal	73.3
RM-2-3	276/40	73.3	Base Metal	73.3
RM-1-3	276/40	-	-	22.0
RM-4-1	345/50	41.3	Base Metal	41.3
RM-3-1	414/60	-	-	22.0
AIP 8-1	138/20	On-Loading	Base Metal	
AIP 8-2	138/20	-	-	100.9
AIP 11-1	207/30	-	-	1036
AIP 10-3	207/30	-	-	1036
AIP 8-3	276/40	-	-	784
AIP 9-2	276/40	-	-	784
AIP 9-3	345/50	-	-	1036
AIP 9-1	414/60	-	-	100.9
AIP 11-2	414/60	On-Loading	Base Metal	-

(b) U-Bend Tests

Sample No.	Bend Type	Failure Location	Exposure Time Hrs
RM UB 5-1	Root	-	169
RM UB 5-2	Root	-	169
RM UB 5-3	Root	-	169
RM UB 5-4	Root	-	169
RM UB 6-1	Root	-	169
RM UB 6-2	Root	-	169
RM UB 6-3	Root	-	169
RM UB 6-4	Face	-	169
AIP 5-1	Face	Weld/HAZ	1035
AIP 5-2	Face	Weld/HAZ	1035
AIP 5-3	Root	-	1035
AIP 5-4	Root	-	1035
AIP 7-1	Face	-	1035
AIP 7-2	Face	Weld-HAZ	1035
AIP 7-3	Root	-	1035
AIP 7-4	Root	HAZ	1035

Key: RM = Re-fused welds, post weld heat treated 20 minutes at 727°C.

AIP = Localized PWHT - Nominally 727°C (1340°F) for twenty minutes, although temperature distribution would be typical bell-shaped curve.

NOTE: All weld material combinations were ESR/VAR.

TABLE III

ANTICIPATED SPECIMEN BEHAVIOR & CONCLUSIONS TO BE DRAWN

Stainless Steel Samples	Carbon Steel Samples	LLTR Piping*	Conclusions
No failure	No failure	No failure	Stress corrosion environment not present. No need for detailed NDE of system.
Failure	No failure	No failure	Specimens are representative of system. A stress corrosion environment was present for that test, but the environment was not sufficiently aggressive to damage the carbon steel system.
Failure	Failure	No failure	Specimens as indicators are successful and conservative. A stress corrosion environment was present. Damage to the system could occur; detailed NDE of the system would be necessary.
Failure	No Failure	Failure	Approach non-conservative and unsatisfactory. Specimens do not represent system conditions.
No failure	No failure	Failure	As above.

*Evaluated by U/S NDE after each test and destructive examination after completion of all testing.

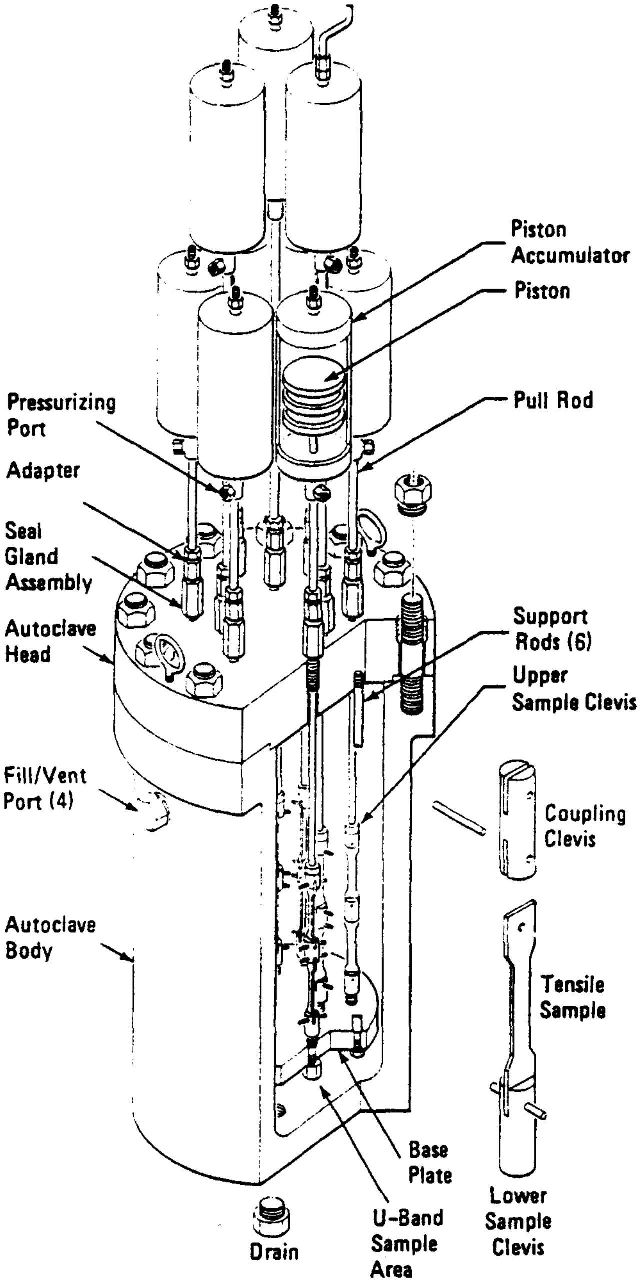

FIG. 1 CONSTANT LOAD STRESS CORROSION TESTING AUTOCLAVE

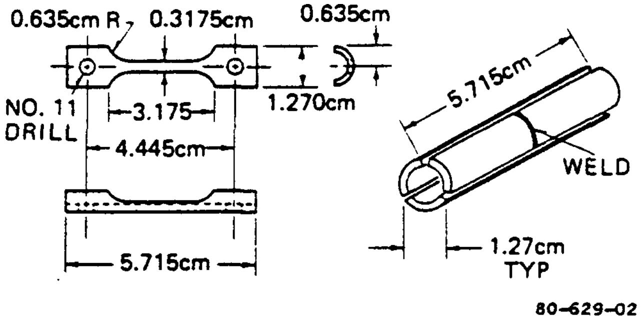

FIG. 2 STRESS CORROSION SAMPLE DESIGN

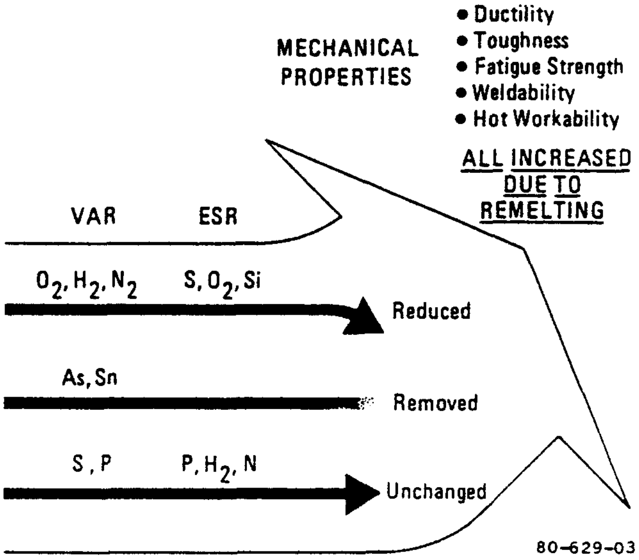

FIG. 3 ADVANTAGE OF REMELTING

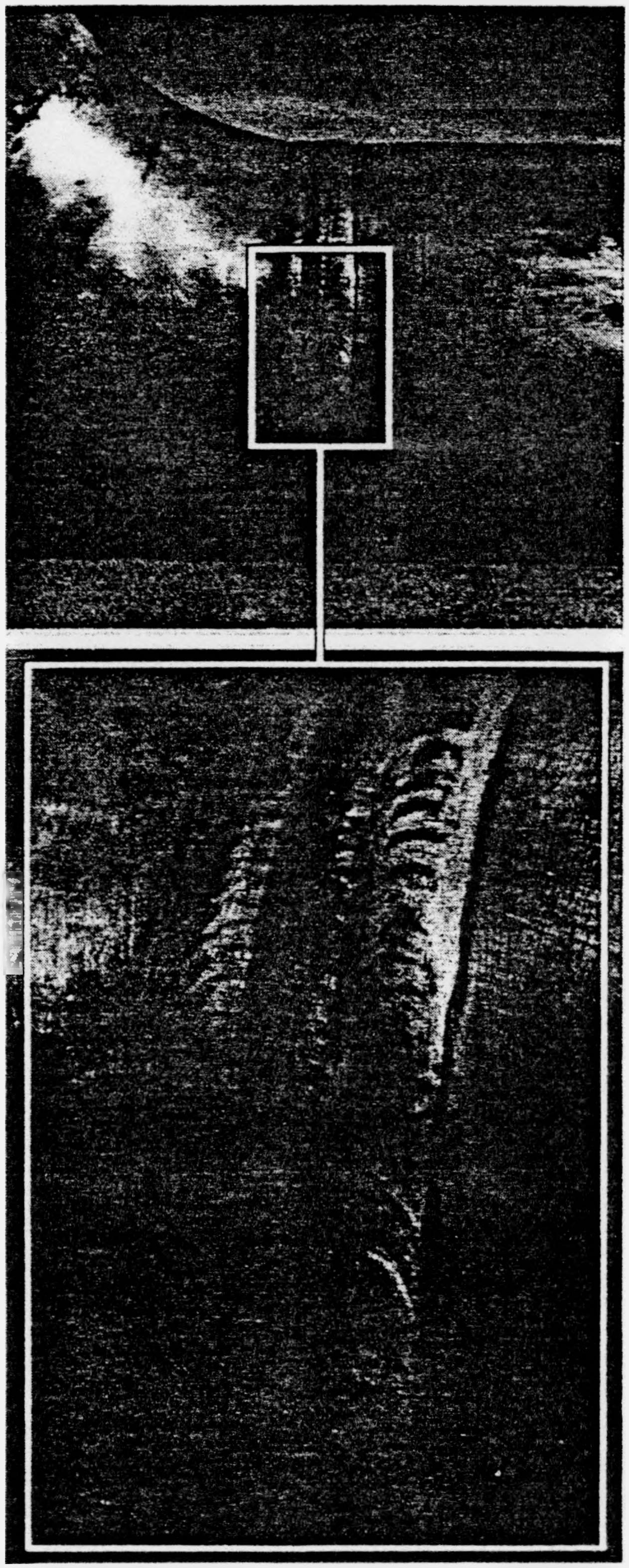

80–629–04

FIG. 4 STAINLESS STEEL ELBOW WELD SHOWING SEVERE SCC

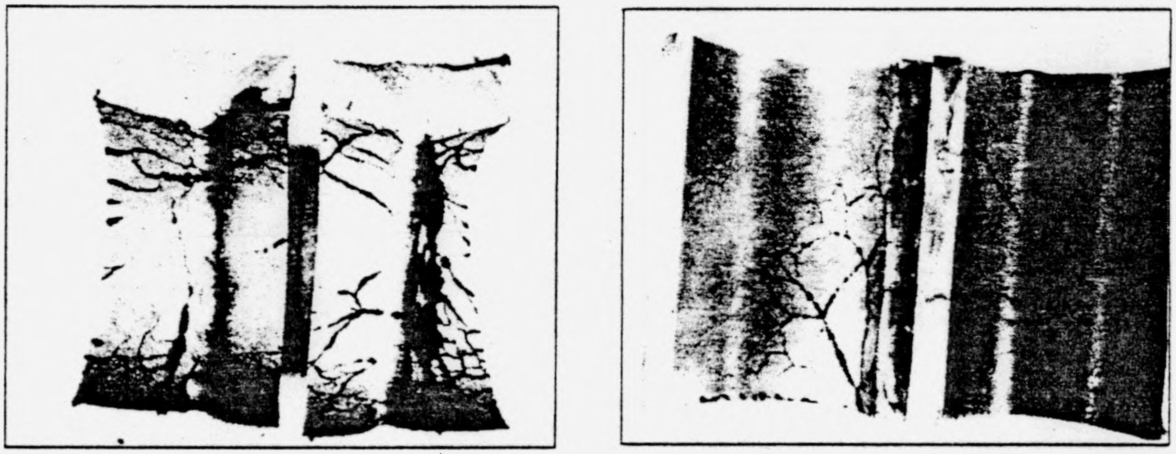

a) Liquid Dye Penetrant Indications

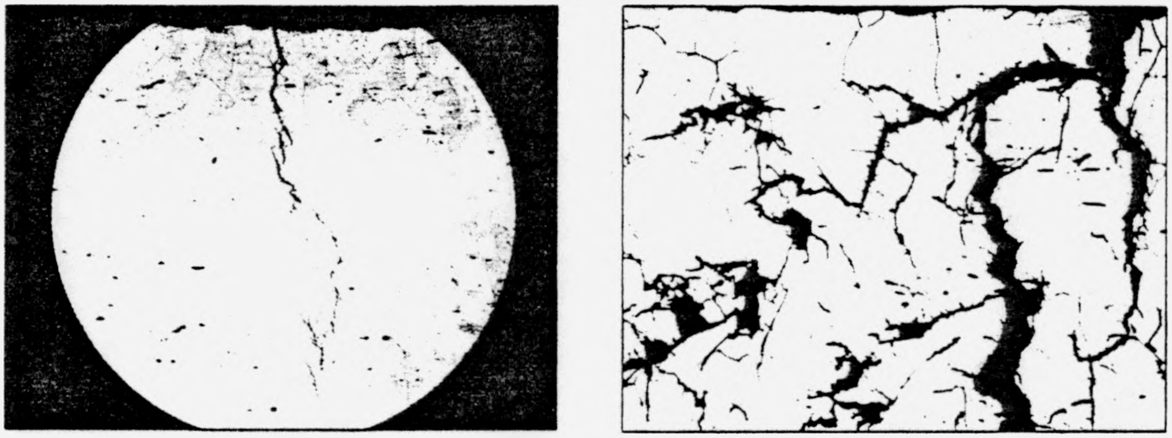

b) Crack Appearance

80–629–05

FIG. 5 CROSS SECTIONAL VIEW OF SS ELBOW WELD SCC

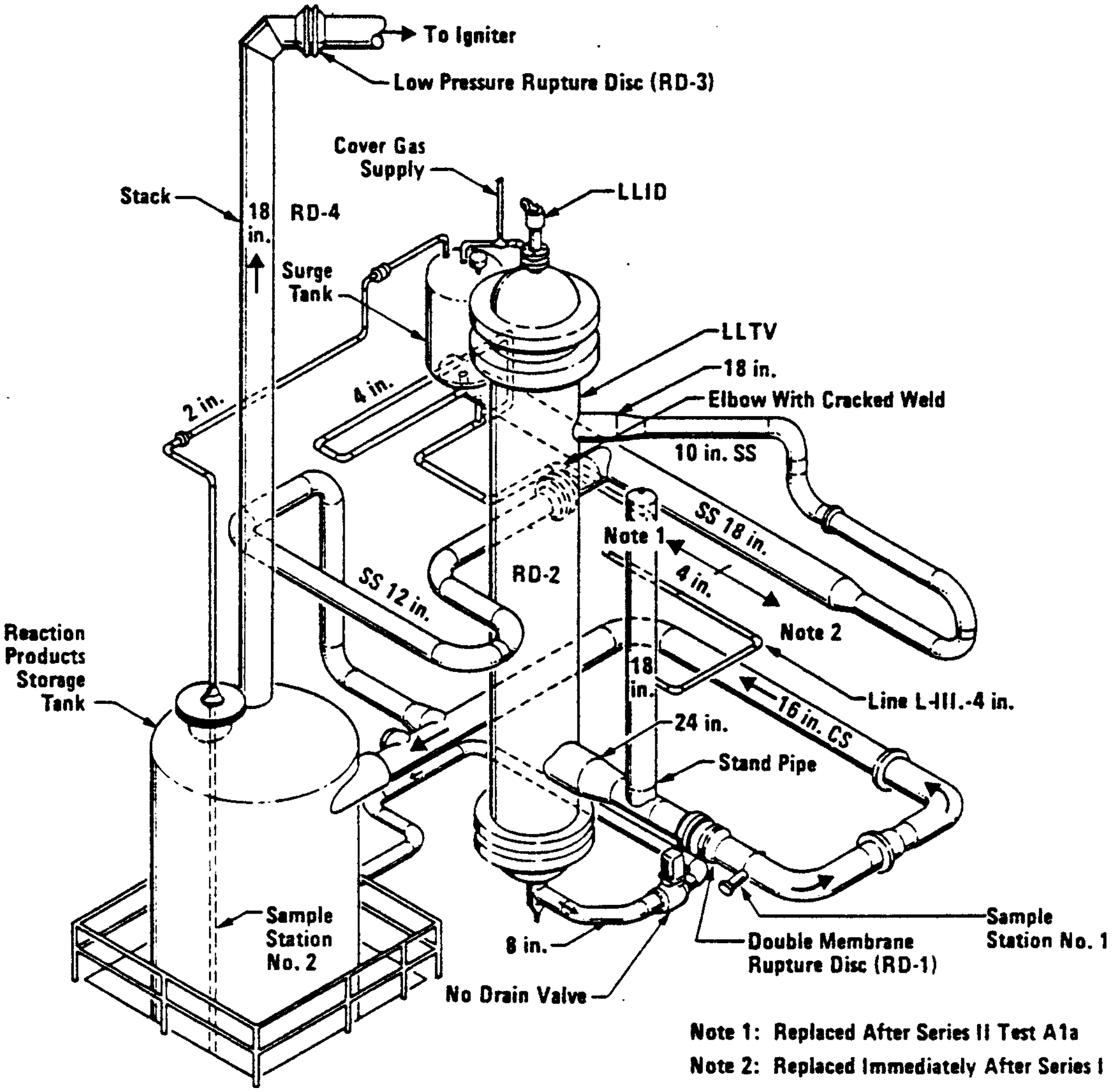

FIG. 6 SERIES II LLTR SHOWING LOCATION OF CRACKED WELD

80-629-06

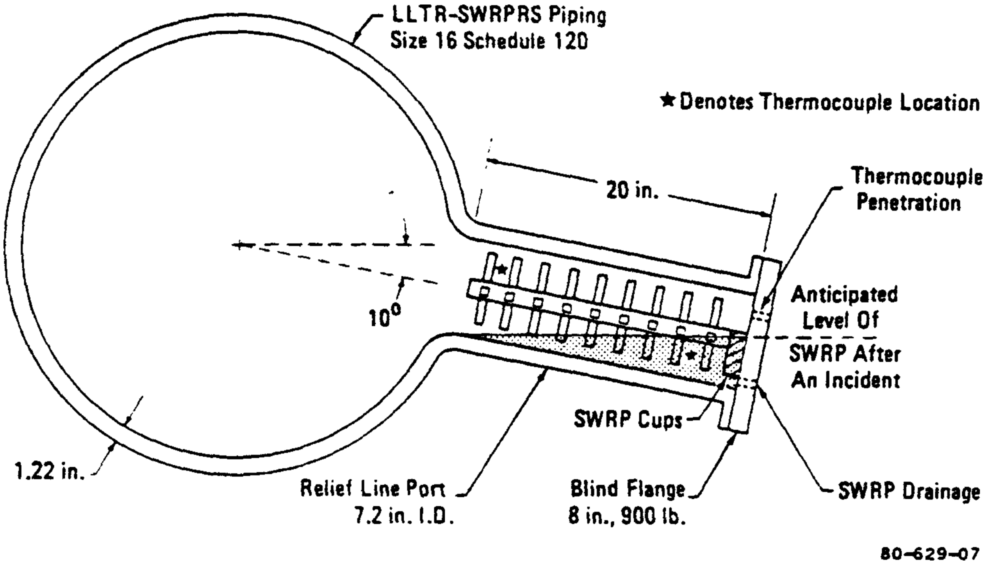

FIG. 7 ORIENTATION OF TEST RACK INTO RELIEF LINE PORT RELIEF LINE PORT

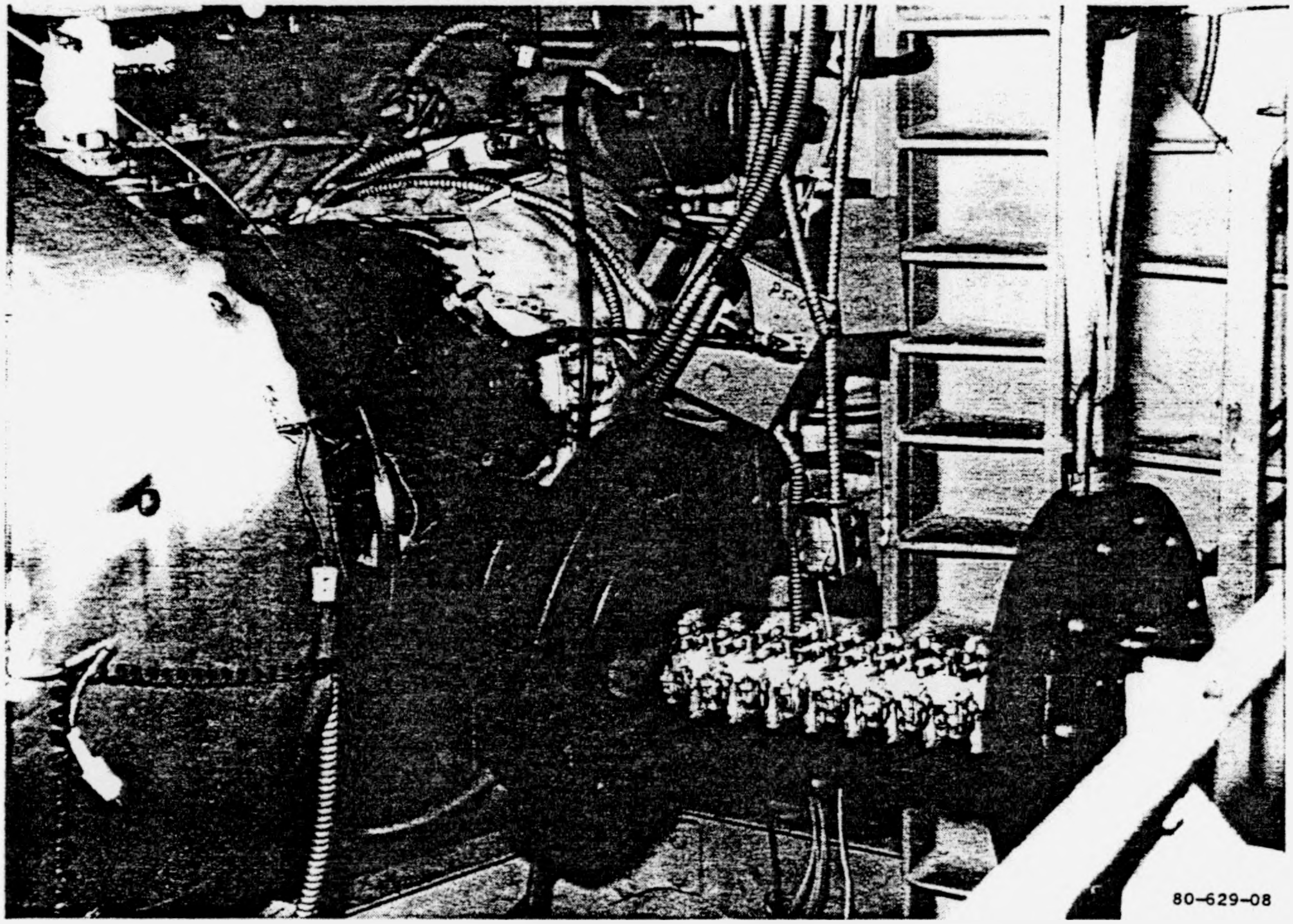

FIG. 8 INSERTION OF TEST RACK INTO RELIEF LINE PORT

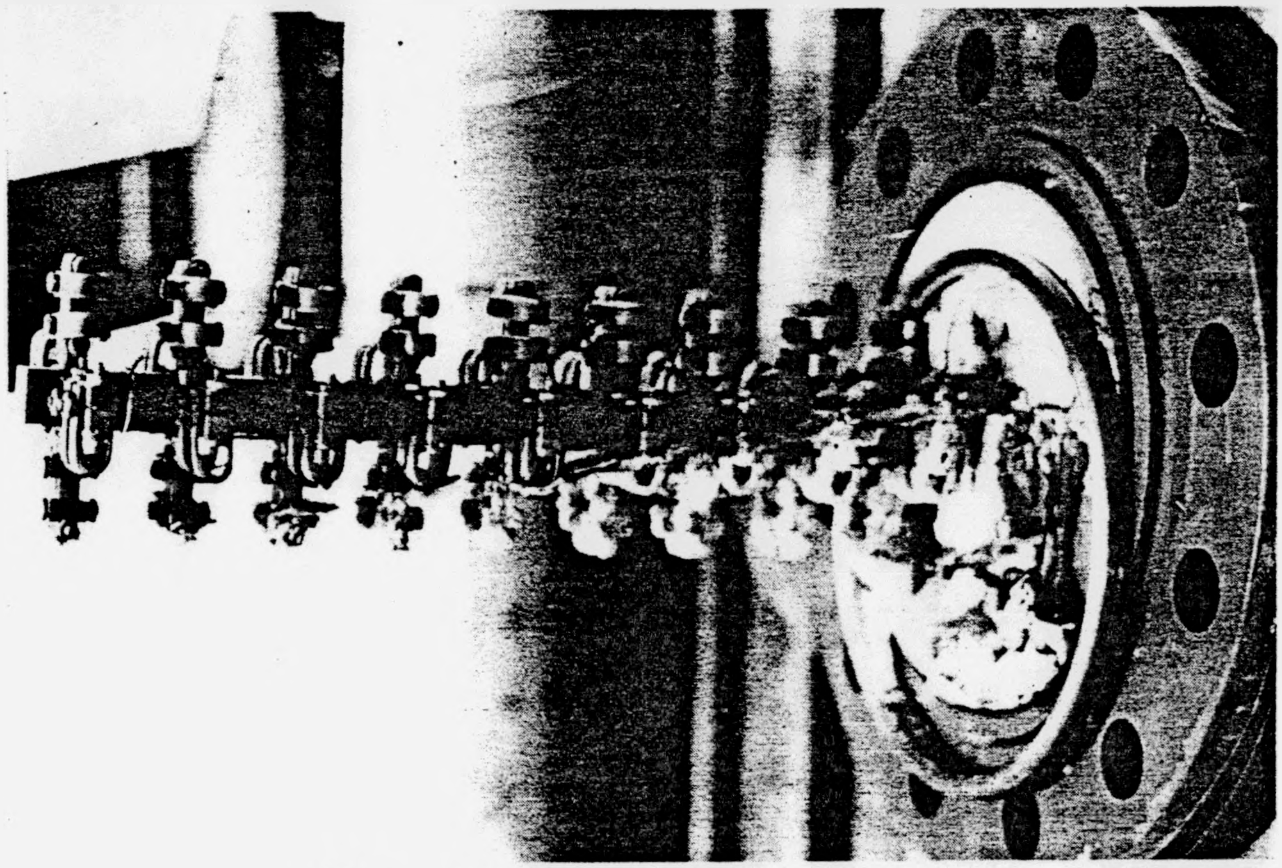

FIG. 9a RELIEF LINE RACK AFTER SWRP EXPOSURE

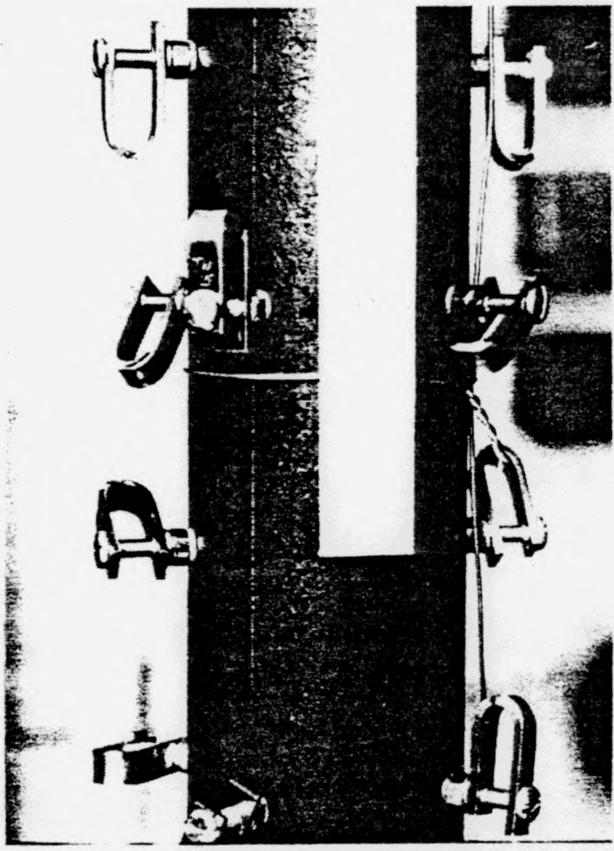

FIG. 9b RPT RACK BEFORE SWRP EXPOSURE

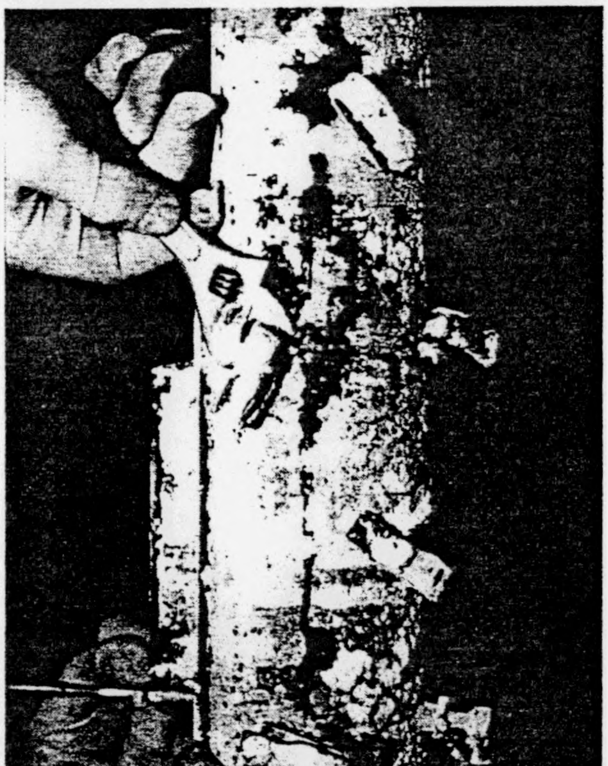

FIG. 9c RPT RACK AFTER SWRP EXPOSURE