188
4/13/78
NTIS

Ar. 2017

CONS/0385-2
NASA CR-135284
BCS 40180-2

A SIMULATION MODEL FOR WIND ENERGY STORAGE SYSTEMS

MASTER

Volume II: Operation Manual

A. W. Warren, R. W. Edsinger, J.D. Burroughs
ENERGY TECHNOLOGY APPLICATIONS DIVISION
BOEING COMPUTER SERVICES COMPANY
A Division of The Boeing Company

August 1977

Prepared for the
NATIONAL AERONAUTICS AND SPACE ADMINISTRATION
Lewis Research Center
Cleveland, Ohio 44135

Contract NAS 3-20385

As a part of the
ENERGY RESEARCH AND DEVELOPMENT ADMINISTRATION
Division of Energy Storage Systems

TABLE OF CONTENTS

TABLE OF CONTENTS (Continued)

TABLE OF CONTENTS (Continued)

TABLE OF CONTENTS (Continued)

LIST OF FIGURES

LIST OF FIGURES (Continued)

LIST OF FIGURES (Continued)

THIS PAGE
WAS INTENTIONALLY
LEFT BLANK

LIST OF TABLES

THIS PAGE
WAS INTENTIONALLY
LEFT BLANK

FOREWARD

This report presents results of work conducted by Boeing Computer Services Company under NASA Contract NAS3-20385, "Wind Energy Storage Model Development." This program was conducted under the sponsorship of the Advanced Physical Methods Branch, Office of Conservation, ERDA, under the direction of Dr. G. C. Chang, and was administered by the NASA-Lewis Research Center Thermal and Mechanical Storage Section with Mr. L. H. Gordon as Project Manager. This report is in three volumes.

I. Technical Report
II. Operation Manual
III. Program Descriptions

The Boeing Program Manager for this work was R. W. Edsinger, and A. W. Warren was the principal investigator.

For completeness, the summary sections 1.1 and 1.2 of Volume I have been repeated in the Operation Manual, Volume II.

THIS PAGE
WAS INTENTIONALLY
LEFT BLANK

1.0 INTRODUCTION

Energy storage systems for the utilization of intermittent power sources have received increased study over the past few years. However, the type and degree of storage required for optimal utilization of wind energy and the total costs and utility of the resulting wind turbine/generator/storage system have not been thoroughly analyzed. The purpose of the SIMWEST (Simulation Model for Wind Energy Storage) program described in this document is to provide a tool for performing this needed analysis. It is a tool to aid in the design of an optimal wind energy system for a given application and to allow the resulting system to be evaluated and verified through realistic simulation.

SIMWEST consists of a library of system components and a precompiler program which allows these components to be put together in building block form. The present library contains components for five types of energy storage systems. They are pumped hydro, battery, thermal, flywheel, and pneumatic. The SIMWEST program, as described here runs on the UNIVAC 1100 series of computers.

Other computer programs exist for the simulation of wind systems and various forms of energy storage. However SIMWEST is the only program capable of simulating total wind systems containing any one or combination of the above types of storage and at the same time having the flexibility and depth required to perform thorough and meaningful parameter studies.

1.1 GENERAL APPROACH

The structure and much of the software for the SIMWEST program is based on a computer program called EASY, which was prevously developed by Boeing Computer Services, Inc. (BCS). SIMWEST consists of two basic programs, and a library of system, environmental, and load components. The first program, the Model Generation Program, is a precompiler which generates computer models (in FORTRAN) of complex wind energy generator/storage/application systems, from user specifications using SIMWEST library components. The second program exercises the resulting computer model to perform cost and potential utiliza-

tion analysis. It handles input, output, integration of system dynamics, and iterates to obtain convergence of variables involved in implicit loops. The combination of these two programs provides a powerful tool for analyzing alternate storage system designs.

Figure 1-1 shows the general organization of the SIMWEST program. In addition to the two programs described above, there is a third which performs file maintenance. It is used to incorporate user supplied data for new subsystem models. Although the program is shown to be made up of a number of subprograms, it can be executed as a single batch program by supplying the model description control cards and the control cards describing the desired analysis to be performed and the desired tabular and/or plotted output.

1.2 SIMWEST LIBRARY

1.2.1 Overview

The SIMWEST library is listed in Table 1-1. It is made up of five types of components: physical, environmental, load, logical, and utility.

Physical components encompass such things as motors, generators, transmissions, flywheels, etc. These components model actual physical hardware which might be used in a wind energy system. The selection of the particular SIMWEST library set of physical components was based on the requirement that it be capable of modeling five types of energy storage systems mentioned previously: thermal, flywheel, battery, pumped hydro and pneumatic.

The degree of detail in the component models is based upon two design criteria. First, all models should contain sufficient detail to simulate all physical characteristics and constraints having significant impact on the systems overall cost effectiveness. Second, the models should be designed to minimize computer time and required user specification. It is assumed that a typical SIMWEST simulation might cover a time span of one year. Thus

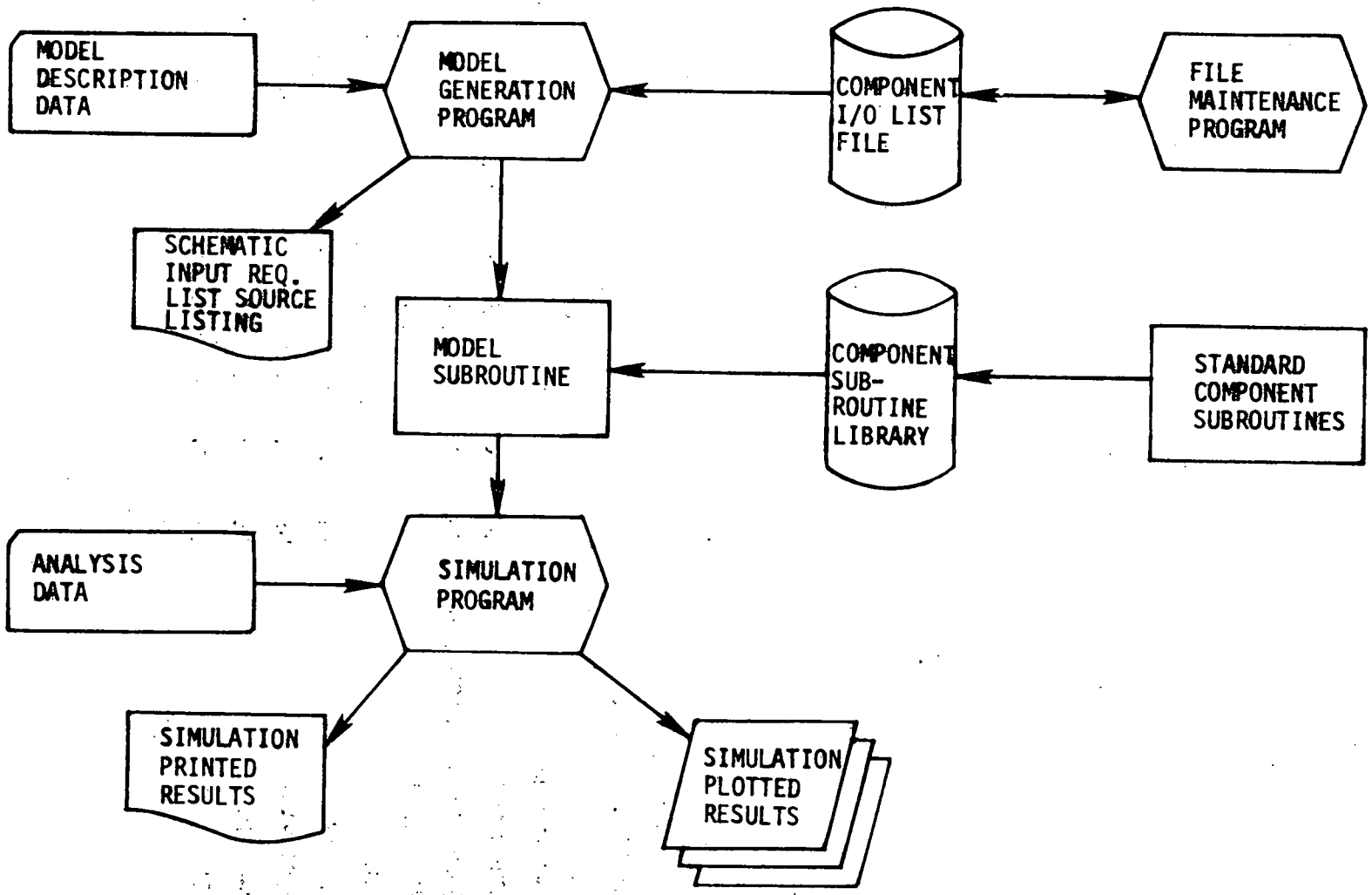

FIGURE 1-1 SIMWEST PROGRAM ORGANIZATION

TABLE 1-1 SIMWEST LIBRARY COMPONENTS

PHYSICAL		ENVIRONMENTAL	
WIND TURBINE	WT	WIND	WD
TURBINE/GENERATOR	WP	AMBIENT TEMP	TP
AC INDUCTION GEN.	GE		
FIXED RATIO TRANSMISSION	GR	**LOAD**	
RECTIFIER	RE	ELECTRICAL LOAD	LO
BATTERY	BA	THERMAL LOAD	TL
INVERTER	IV		
ADMITTANCE	AD	**LOGIC**	
COMPRESSOR (PNEUMATIC)	CO	POWER DIVIDER	PD
ADIABATIC HEAT EXCHANGER		POWER ACCUMULATOR	PA
(INPUT CYCLE)	HX	PRIORITY INTERRUPT	PI
ADIABATIC HEAT EXCHANGER		SWITCH	SW,SX,SY,SZ
(OUTPUT CYCLE)	HY		
PNEUMATIC STORAGE VESSEL	CS	**UTILITY**	
BURNER	BN	COST MONITOR	CM
TURBINE (PNEUMATIC)	TU	SATURATION	SA
INDUCTION MOTOR	MO	RANDOM NUMBER GENERATOR	RN
VARIABLE RATIO TRANSMISSION	TR	TEST FUNCTIONS	AF
FLYWHEEL/CLUTCH	FL	TABLE LOOKUP	FU,FV
PUMP (HYDRO)	PU	TRANSFER FUNCTION	IT,LA,LL,TF
TURBINE (HYDRO)	HT	ARITHMETIC ELEMENT	MA,MB,MC
HYDRO STORAGE	HS	HISTOGRAM	HG
THERMAL STORAGE	TS	TAPE READ	TA
UTILITY	UT	TIME CONVERSION	TI

from a computer run time and economic impact point of view a simulation step size of between 15 minutes and one hour seemed reasonable.

As a result of the above two design criteria many physical components, such as the electrical components, were modeled mainly in terms of power flow and steady state response. This lack of detail is consistent with the 15 minute time step and with the concept that the important transients are on the time scale of demand curves or weather patterns, i.e. an hour or more, rather than on the time scale of electric motor transients of a few seconds. If short electric transients were to be modeled, much detail would need to be added to the component models which would greatly increase the user's task of specifying the model. Further, the simulation time step would have to be reduced to a fraction of a second so the model would not only be much larger but computer runs would be much costlier.

Environmental components are those which simulate environmental conditions. In the present SIMWEST library these conditions are wind speed and ambient temperature. These variables are generally used as inputs to physical components. Environmental component output can either be computed from measurement data provided by the user on a data tape, or from randomly generated data, based on user furnished profiles.

The load components in the SIMWEST library are used to simulate various types of power demand. They also monitor how well the system meets the simulated demand and compute the value of the energy delivered by the wind energy system to the load. Like the environmental components these components may be computed from actual measurement data or from randomly generated data based on user furnished load profiles.

The library's logical components are the power dividers, power accumulators, switches and priority interrupts. Although physical hardware could generally be built to serve the function of the logical components, they are not meant to represent any particular piece of existing hardware. Instead, they are

idealized components that allow the user the flexibility of modeling the wide variety of control logic which a wind energy storage system would require. In practice, the control function might be performed by a control room operator using a predefined control strategy or by use of a minicomputer.

Finally, the utility components include such things as the tape read, the histogram and the cost monitor. These components serve only to help the user run the simulation and analyze its results.

1.2.2 Storage Subsystems

Figures 1-2 through 1-6 give example configurations of the five types of storage subsystems which can be modeled with the present SIMWEST library. For illustrative purposes the number of variables shown passed between components is limited. A description of the variables being passed is given in Table 1-2.

A total wind energy system will generally be made up of elements from a number of different subsystems (see Figure 1-8). In addition, the SIMWEST program can be used for models which include networks of storage subsystems of the same type or a network of wind generators.

1.2.3 Logic Components

The capability for modeling complex system control logic is provided by the power divider, power accumulator and priority interrupt components. Both the divider and accumulator operate on a priority basis. The priority interrupt is used by other system components to change the priority setting of the divider and accumulator.

The power divider has one input power port and four output power ports (not all output ports need be used for a given simulation). The divider also has

TABLE 1-2 PARTIAL LIST OF COMPONENT INPUTS AND OUTPUTS

SYMBOLS	
P	POWER
RE	POWER REQUEST
MP	MAXIMUM POWER
RS	ROTOR SPEED
T	TEMPERATURE
TA	AMBIENT TEMPERATURE
M	MASS FLOW RATE
H	RESERVOIR HEIGHT
LD	THERMAL LOAD DELIVERED
WV	WIND VELOCITY
GR	GEAR RATIO
EF	EFFICIENCY
INT	INTERRUPT FLAG
TSO	MINIMUM AIR TEMPERATURE
PR	PRESSURE
PS	PRIORITY SEQUENCE
WY	WEEK OF YEAR
DW	DAY OF WEEK
TD	TIME OF DAY
SP	SURPLUS POWER
VAR	FILE READ VARIABLE

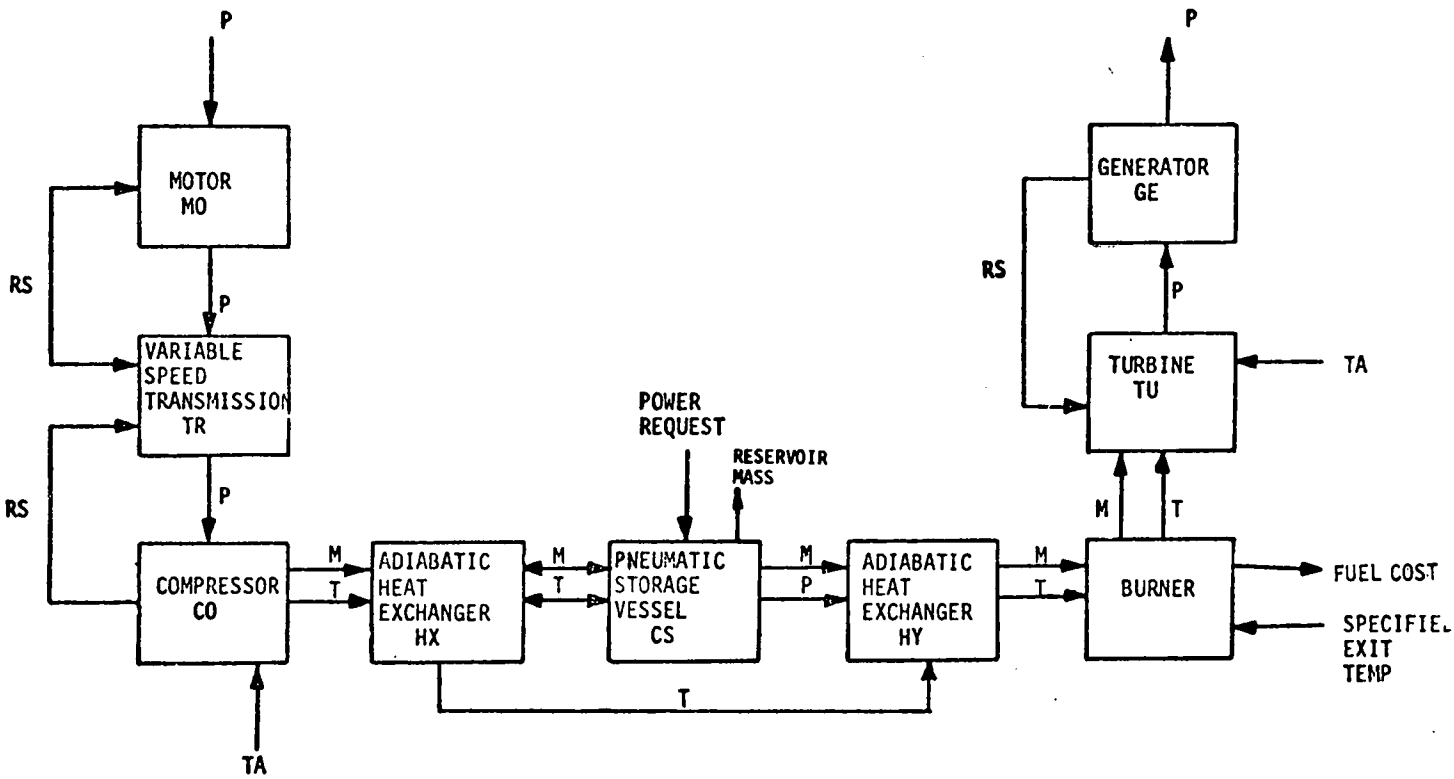

FIGURE 1-2 PNEUMATIC STORAGE SUBSYSTEM

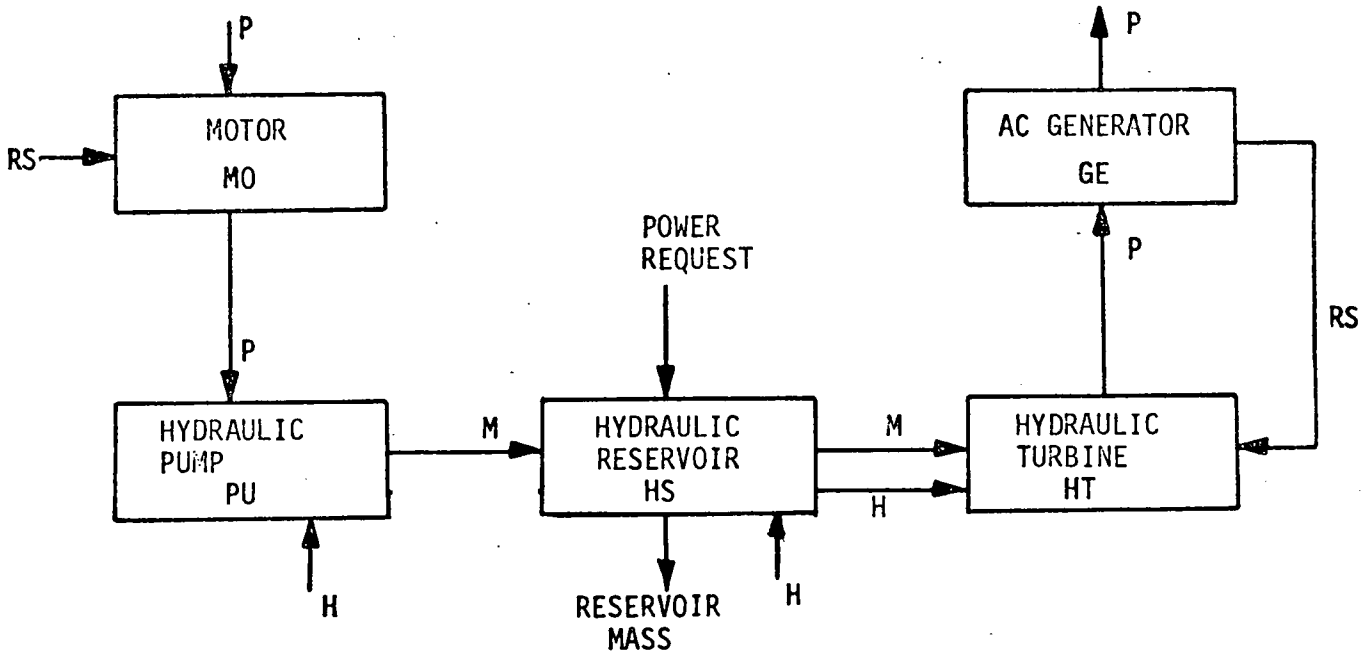

FIGURE 1-3 PUMPED HYDRO STORAGE SUBSYSTEM

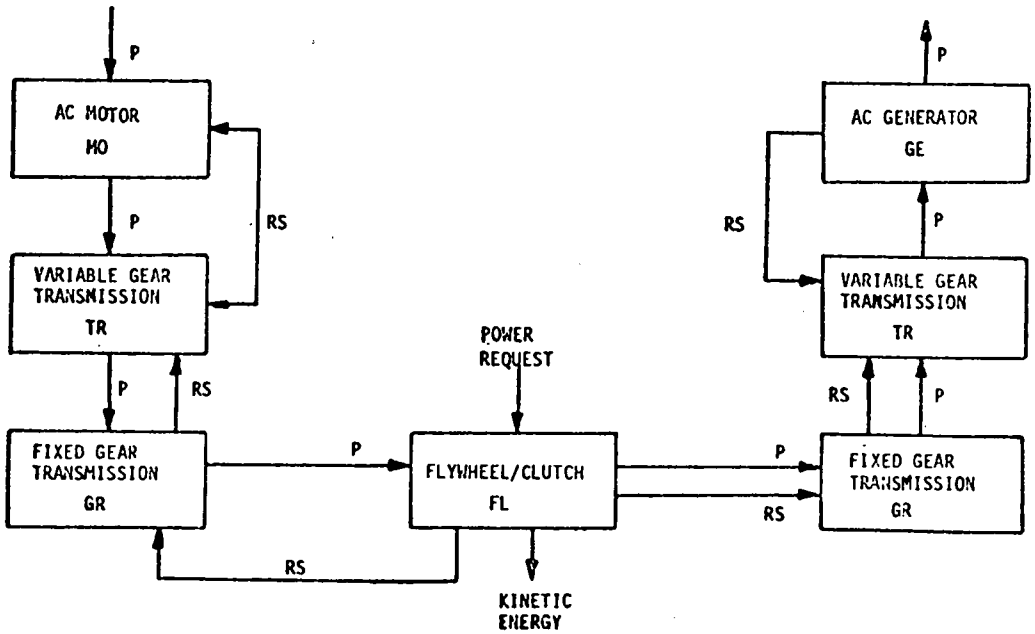

FIGURE 1-4 FLYWHEEL STORAGE

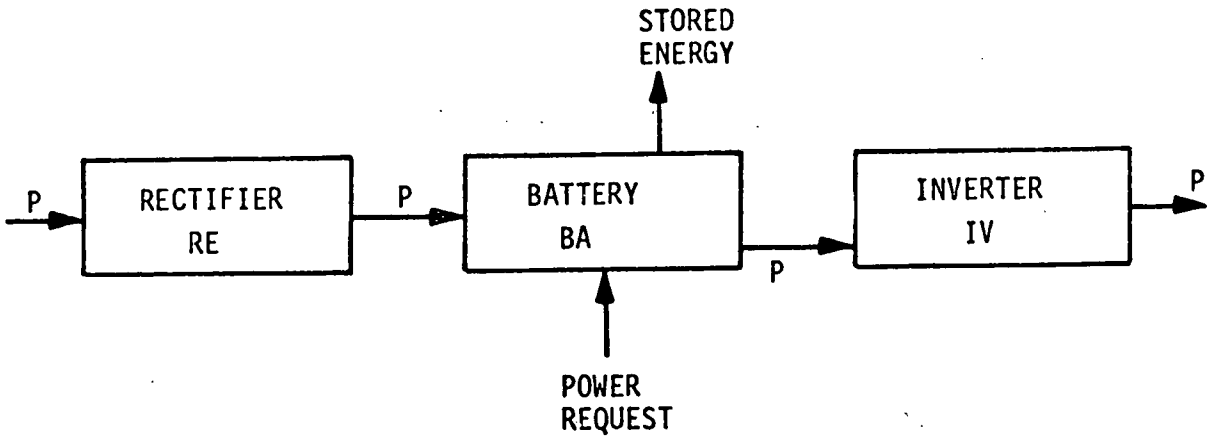

FIGURE 1-5 BATTERY STORAGE

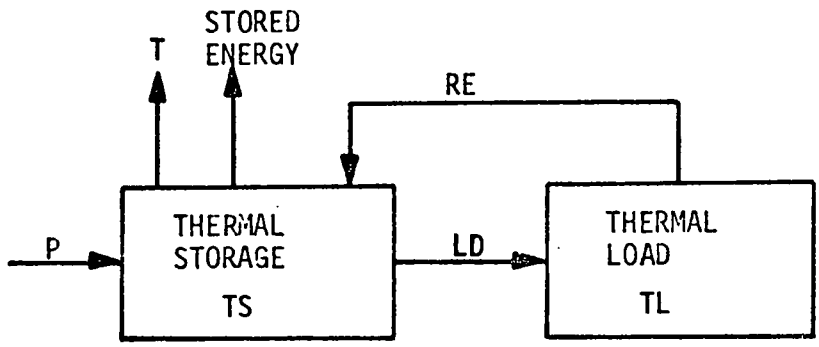

LD = LOAD DELIVERED

FIGURE 1-6 THERMAL STORAGE

an input request associated with each of its output power ports. These power requests generally come from a component with which the output power port is directly or indirectly connected. The user specifies priorities of either 0,1,2,3, or 4 to be associated with each of the output ports. If the input power to the power divider exceeds that requested of the port with highest priority (priority 1) then the excess power goes to the port with the next lower priority. This process continues until either all power is distributed or all requests of non-zero priority ports are met. A port with zero (0) priority will never receive power. Such ports are included so that the port may be connected to a component but transmit power only in critical situations, say, when a battery has been in discharge state for a critical amount of time. In these situations, the connected component would have to change the zero priority setting of the power divider by use of a priority interrupt.

Two or more ports may be assigned the same priority in which case the user may specify weights to be associated with each port. Then if there is not enough power available to satisfy all requests of equal priority the power is divided between them in proportion to the user specified weights.

The power accumulator is similar to the divider except that instead of distributing power from a single input port between four output ports, it accumulates power from four input ports and sends it out through a single output port. The power accumulator also accepts output power requests from the component connected to its single output power port and it outputs requests for each of its input ports in order to service the output power request.

In addition to the actual power delivered to each input port, the power accumulator also accepts information as to the maximum power that can be delivered to that port. These values are used by the accumulator to determine how to distribute its power request between its four input ports. If the input power request exceeds the maximum deliverable power for the port of highest priority, then the remainder is shifted to the port with the next lower priority. This process continues until either the power request has been completely distributed between the highest priority input ports or all input

ports have requests equal to their maximum deliverable power. An example illustrative of the use of power dividers and power accumulators is given in Figure 1-7.

Here the wind turbine distributes power first to satisfy the request from load 1. If there is power left over, it then tries to satisfy the request from the battery. Finally, if the battery is full or if its charging rate is met, then the excess power goes to the flywheel. The battery is connected to the wind turbine and also has a priority zero connection to the utility. Thus, if the battery remains in a discharge state for more than a specified amount of time, it can change the utility priority (from 0 to 1) to receive the needed power.

Also in Figure 1-7, we see that load 2 prefers to draw power from the flywheel before turning to the battery. This configuration tends to keep the flywheel as discharged as possible, using it primarily as a means to absorb large influxes of power.

Figure 1-7 is a rather simple configuration used for illustrative purposes. A more complex configuration is shown in Figure 1-8.

1.2.4 SIMWEST Output

There are three basic forms of SIMWEST output to facilitate the analysis of wind energy storage systems; line printer plots, histograms of system variables and time sequenced output of variable values. To enhance the usefulness of these outputs each SIMWEST library component is associated with a number of output variables. Prior to simulating a given system the user specifies which of these variables he wants plotted. For plotted output he may select to have the independent variable be the plot time or any of the other variables. For example he may want to plot the energy of pneumatic storage as a function of time and/or as a function of storage versus temperature. If the user wants s time sequenced listing of all variable values

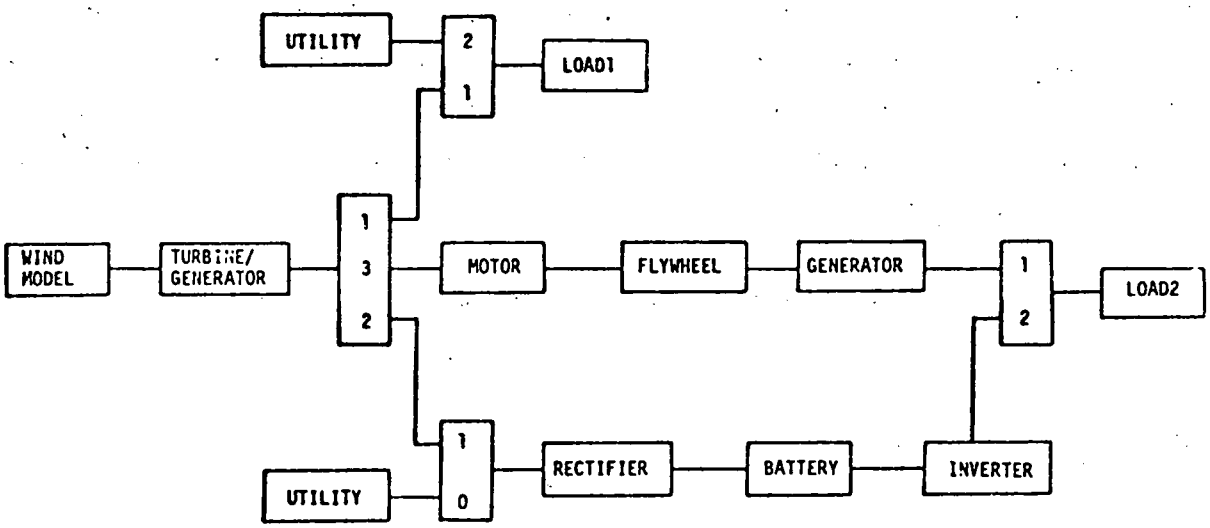

FIGURE 1-7 EXAMPLE OF POWER DIVIDER & ACCUMULATOR USE

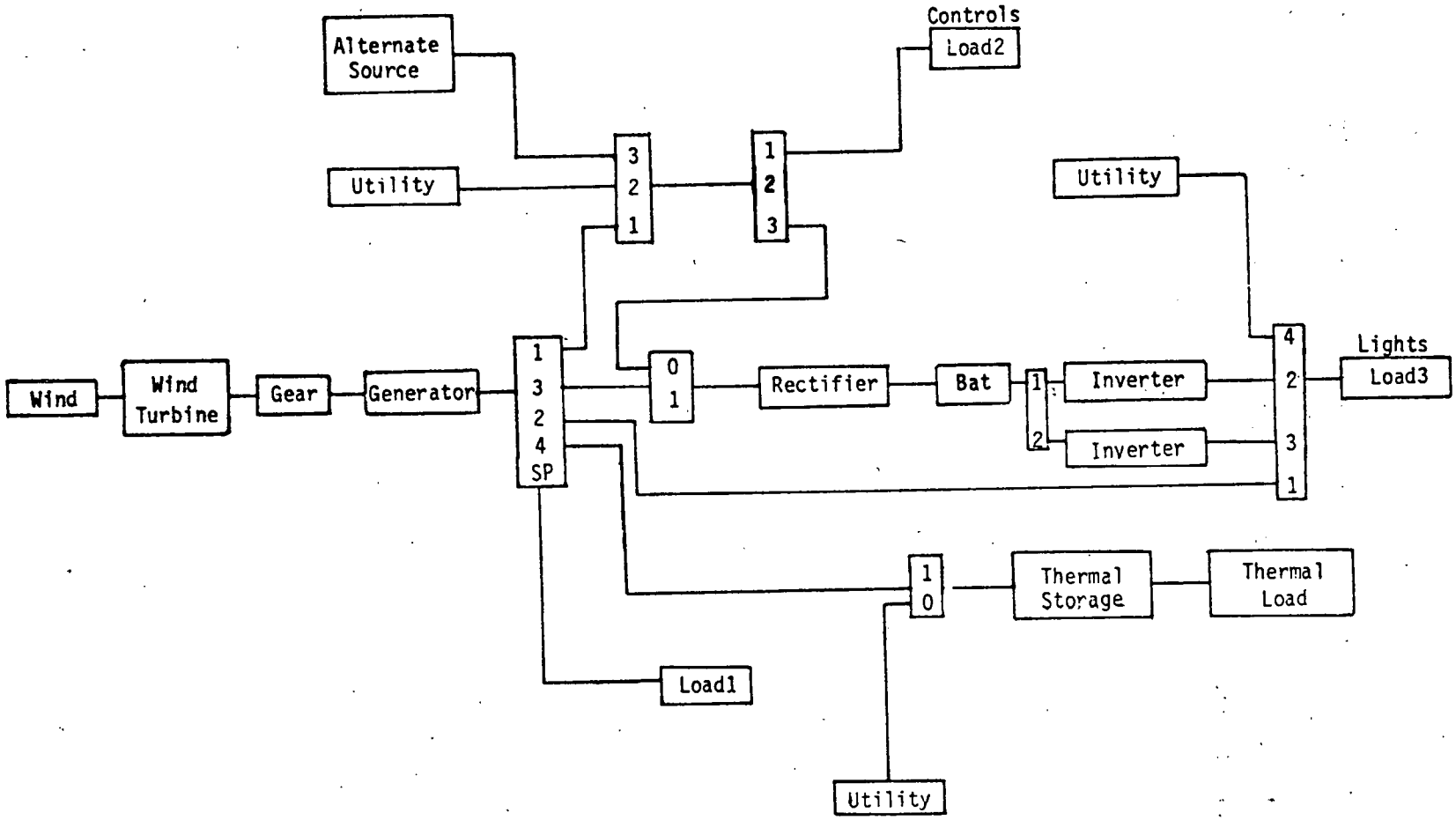

FIGURE 1-8 PLUMBROOK CONFIGURATION FOR PARAMETER STUDY

he just specifies the time step between printouts. The listing of all variables has proven to be a useful tool in understanding the performance of the storage system under consideration and a valuable aid in validating the system design.

2.0 MODEL GENERATION

The Model Generation program design is based on the assumption that the system analyst will begin by constructing a schematic diagram of the system he wishes to analyze. This schematic will be comprised primarily of standard SIMWEST library components. Standard library components include wind turbine, wind models, AC induction motors, inverters, rectifiers, etc. If a particular system cannot be modeled with existing standard components, the analyst may construct the model by including appropriate FORTRAN statements in his system description.

All interconnections between standard components are accomplished by the Model Generation program. The analyst merely specifies each standard component in the schematic diagram and all of the components that provide inputs to that component. The Model Generation program then generates names and the proper interconnections between the specified components. This is accomplished by matching the input quantities required by each standard component to the output quantities of the specified input components.

After processing the complete system model description, the Model Generation program generates a schematic diagram of the model showing the interconnections between standard components and the quantities such as power, pressure, temperature, mass flow rates, etc., that pass through each interconnection. This schematic is produced on the lineprinter to provide a rapid graphic check on the program's interpretation of the model description.

In addition, the program produces a list of input data that will be required by each component to complete the model description. Both the scalar parameters and tabular data required for the analysis are included in this list. The program assumes that any quantity not supplied by another component will be supplied as a fixed parameter by the analyst. Thus requests for non-parameter items in the input data list will reveal any connection that was omitted from the system model description.

2.1 MODEL DESCRIPTION

The Model Generation program is a precompiler program which accepts model description instructions and from these instructions generates a FORTRAN model of a system. These instructions, referred to as "program commands," are made up of one or more words. In addition, the system model description contains numeric values, standard component names, and standard input and output quantity names.

The Model Generation commands may be best introduced with a simple example of their use to describe a wind turbine system. Figure 2.1-1 shows an analyst's schematic of a wind turbine model that has been constructed using standard components on a SIMWEST schematic form. The standard component names used in this sample are:

WD - Wind Model
WT - Wind Turbine
TI - Time Conversion
HG - Histogram Generator
GR - Fixed Ratio Transmission
LO - Electrical Load
GE - AC Induction Generator

The SIMWEST description of this model would be as follows:

Example 2.1

```
LIST STANDARD COMPONENTS
MODEL DESCRIPTION        WIND TURBINE TEST CASE
LOCATION=15      TI
LOCATION=11      WD       INPUTS=TI
LOCATION=31      WT       INPUTS=WD
```

SIMWEST SCHEMATIC FORM

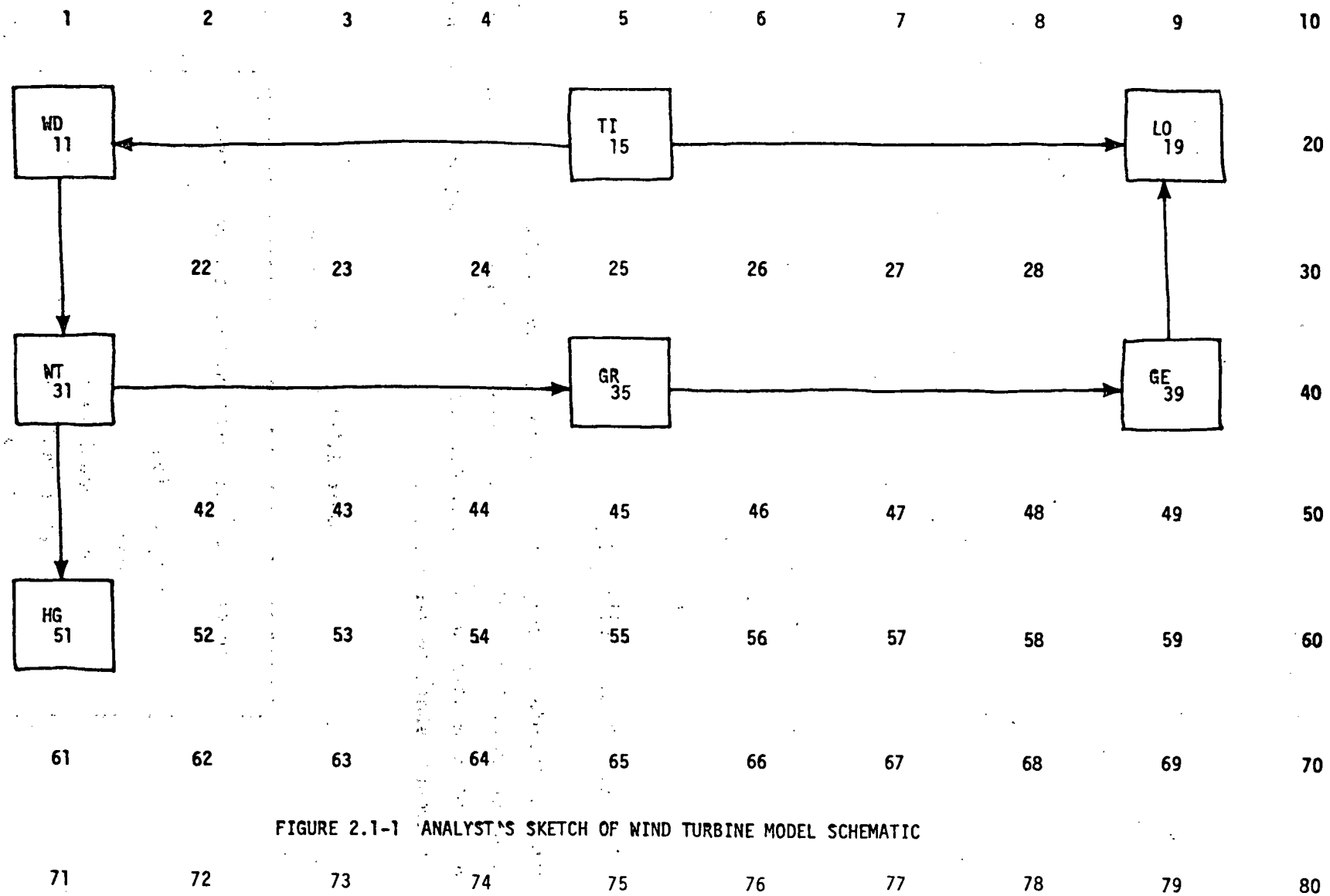

FIGURE 2.1-1 ANALYST'S SKETCH OF WIND TURBINE MODEL SCHEMATIC

Example 2.1 (Cont.)

```
LOCATION=35     GR     INPUTS=WT
LOCATION=51     HG     INPUTS=WT(P =FIN)
LOCATION=39     GE     INPUTS=GR
LOCATION=19     LO     INPUTS=GE,TI
END OF MODEL
PRINT
```

The model description consists of a statement as to the location of each component in the schematic and a list of all components that provide inputs to that component. The location of the component in the schematic is used for a line printer drawn schematic of the model, such as shown in Figure 2.1-2. In the line printer schematic the input and output quantities such as powers (P2 WT, P2 GE, P2 GR) are shown on the various connecting lines.

2.1.1 Phrases and Delimiters

The system model description is interpreted by the Model Generation program as a series of "phrases", which can appear in a free field format in any position on a data card. Phrases must be separated by any one of the delimiter symbols shown in Table 2.1-1.

Table 2.1-1

Model Generation Program Language Delimiters
= equal sign
, comma
(left parenthesis
) right parenthesis
three or more blanks

WIND TURBINE TEST CASE

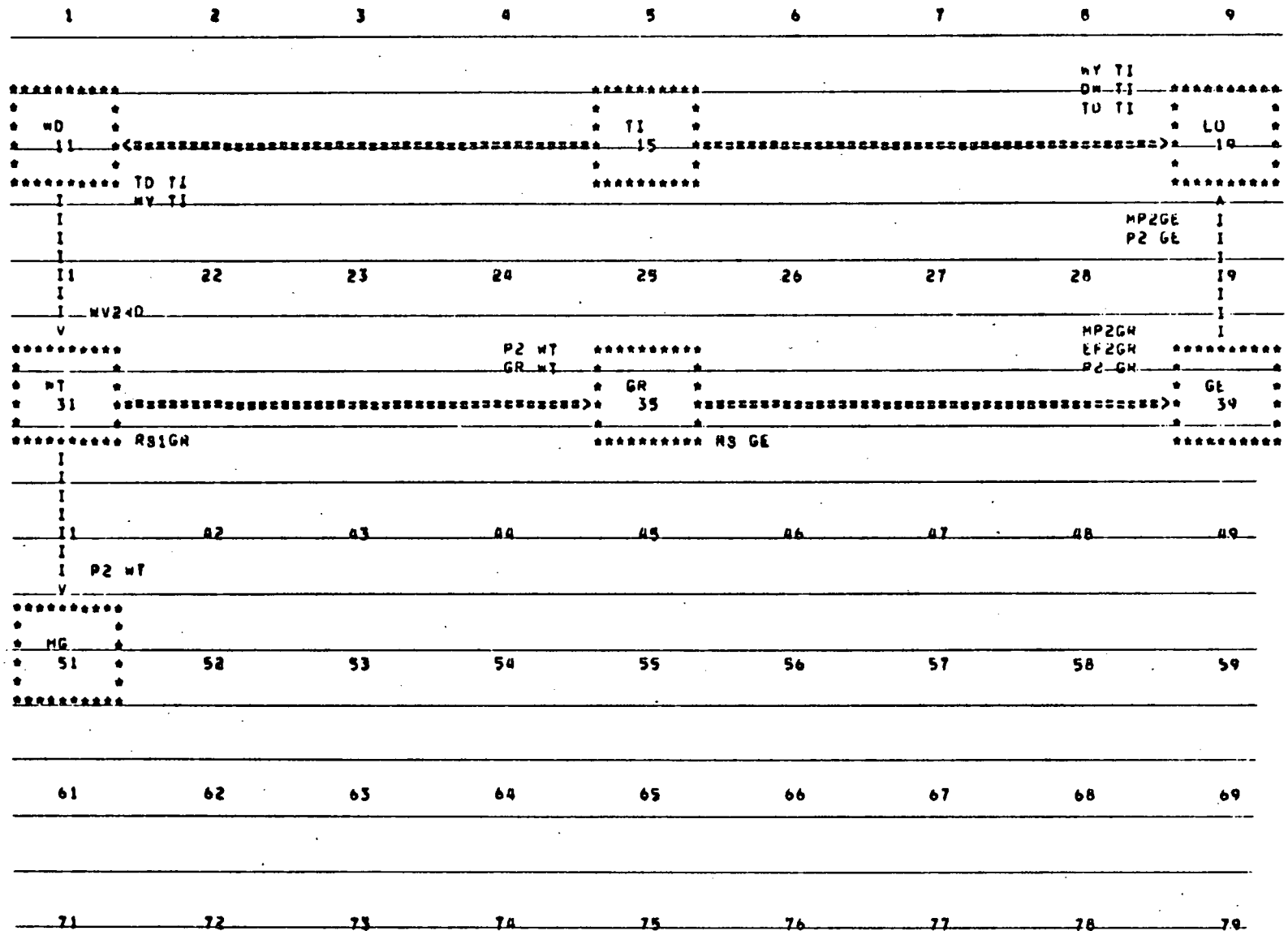

FIGURE 2.1-2 LINEPRINTER-DRAWN WIND TURBINE MODEL SCHEMATIC

2.1.2. Command Phrases

The Model Generation command phrases are described in this section in a logical sequence similar to that in which they appear in system model descriptions.

MODEL DESCRIPTION

The MODEL DESCRIPTION command phrase indicates the start of a new system model. This phrase may be followed, (on the same card), by a title of up to 60 characters. This title will be used to identify various program output schematics, lists and program listings. In Example 2.1, the title was "Wind Turbine Test Case."

LOCATION

The LOCATION command phrase indicates the start of the description of a new component in the system model. This command must be followed by a numeric value phrase that specifies the location of the new component on the model schematic. Thus in the example of Figure 2.1-1, the location number of the wind model WD was 11 and the wind turbine WT was 31, etc. To be a valid component location, the last two digits of this number must comprise a number between 1 and 80. The hundreds column is used to specify additional pages as needed for the schematic. Thus the numbers:

1, 13, 51, 80

would be valid location numbers for components on the first page, (PAGE 0), of a system schematic. These same locations on the second page of the schematic, (PAGE 1), would be:

101, 113, 151, 180

The location number phrase is followed by the name of the component at that location. Component names are discussed in Section 2.2.

A LOCATION statement should be given only once for each component. That is, once a LOCATION statement is started for a component the complete description of all inputs to that component should be given.

INPUTS

The INPUTS command phrase indicates that the following phrases contain the names of the components that provide inputs to the component at the specified location. Thus in the example of Figure 2.1-1, the electric load at location 19 which receives inputs from generator GE and the time source TI was described as:

```
LOCATION=19      LO      INPUTS=GE,TI
```

In this example the command phrase INPUTS is followed by two component names. As many component names as are necessary to specify the inputs to a particular system component may be included in each component description.

For some system components there are multiple input and/or output ports. For example, a power divider has four input power ports. When specifying the connections between such components, it is advisable to specify which ports are to be connected. This is done by adding the port numbers to be connected after the name of the input component. Thus, the wind turbine to transmission connection could have been more explicitly described as:

```
LOCATION=35      GR      INPUTS=WT(2,1)
```

This says that port 2 of the wind turbine (WT) drives port 1 of the transmission (GR). Any quantities which have no port numbers are considered "universal ports" for input connections. Thus, the GR input of GR is connected

up to GR WT, and the RS input of WT is connected up to RSIGR by the above command. If the port designations are omitted, as they were in example 2.1., the connections will be made to the first available input port starting with the minimum port number. Once a connection has been made to an input port, those input quantities that are connected are unavailable for further connections. An exception is made when the physical quantities of both input and output are specified. This method of specifying connections is described in the following paragraphs.

For certain components, such as control elements, the inputs to the component can be any physical quantity in the model. For these components, the input component names must be supplemented by the name of the particular output quantity that is to provide the input.

As an example, consider a component that represents a linear first order lag transfer function. If the transfer function component's input, FIN, was to be the rotor speed of the wind turbine WT in example 2.1, then the statement:

```
LOCATION=53      LA      INPUTS=WT(RS=FIN)
```

would indicate to the program that of the outputs of the wind turbine, the output rotor speed, RS, was to be used as the input, FIN, to the transfer function, LA.

To summarize, there are three levels of connection specification:

1. Default (only component names are specified)

   Connections are made between all unconnected inputs and outputs for the first ports for which a match of physical quantity names occurs.

2. Ports Specified

Connections are made between matching physical quantities for all unconnected inputs and outputs of the specified ports.

3. Physical Quantities Specified

Connections are made between only those quantities specified. Previous connections can be over-ridden, providing the three character physical quantity name of the previously connected variable is used. For example, the phrase

```
LOCATION=19     LO     INPUTS=GE,GE(P,2=MP2),TI
```

will replace the input parameter MP1LO by MP26E and then override the connection MP2GE and substitute P2 GE as the LO input.

END OF MODEL

The END OF MODEL command phrase indicates that model description has been completed and that the Model Generation program should proceed with the generation of the model subroutines.

PRINT

The PRINT command phrase causes the program to: (1) draw a schematic of the system model, as shown in Figure 2.1-2; (2) print a list of input requirements for the model; and (3) print a source listing of the FORTRAN subroutines that were generated for the model. The Model Generation program then terminates.

PUNCH

The PUNCH command phrase has the same effect as the PRINT command, but in addition a FORTRAN source deck of the system model is produced.

FORTRAN STATEMENTS

The FORTRAN STATEMENTS command phrase allows the system analyst to supplement the library components with FORTRAN statements. Using this feature, the analyst can introduce his own program logic, DO loops, etc., as necessary to model any system feature not obtainable with standard library components.

One of the common uses of the FORTRAN STATEMENTS command is to input large tables into the model. Two function subprograms TBLU1 and TBLU2 are provided for this use. They perform linear interpolation from one and two dimension tables, respectively. TBLU1 is in general called in the form

```
F = TBLU1(X,TAB(4),TAB(4+N),I,±N),
```

where F is the interpolated value at the desired point X, TAB is a one dimension table with dimension N, TAB(4) is the independent variable and TAB (4+N) is the dependent variable list, I = 0 for equal spaced data, I = 1 for unequal spaced data, and the dimension N is specified as the last variable if linear extrapolation is desired, and -N is specified if truncation is desired outside the table limits. Similarly, TBLU2 is in general called using the form

```
F = TBLU2(X,Y,TAB(4+M),TAB(4),TAB(4+M+N),IX,IY,±N,±M,N,M),
```

where X and Y are the values of the primary and secondary independent variables, N and M are the dimensions of the primary and secondary variable arrays, IX and IY are indicators for equal spaced or unequal spaced data as above, and the sign convention on N and M is positive for extrapolation, negative for truncation.

The FORTRAN STATEMENTS command would normally be used only when some portion of the system cannot be modeled with library components. Then using this feature of the program, the analyst must perform many of the detail connections

and naming of variables, that are normally accomplished by the Model Generation program. In return for these added tasks, the analyst gains a great deal of additional freedom and flexibility in forming details of his system model. Non-executable code such as common blocks must precede the first component definition and executable code should come after a component has been defined for the iteration logic to work properly.

ADD STATES
ADD VARIABLES
ADD PARAMETERS
ADD TABLES

The ADD commands may be used in conjunction with the FORTRAN STATEMENTS to add states, variables, parameters, and tables that occur within the FORTRAN statements, to the system model. Quantities that are not specified by one of these commands cannot be accessed or manipulated by the Analysis Program.

Before discussing these commands, a few definitions of terms are in order.

States: States are those quantities in the system model that are described by first order differential equations. The state variables are the result of integrating the set of first order differential equations that comprise the dynamic system model. The number of states equals the order of the system model. The states are dynamic, time varying quantities during most simulation studies. The initial values, (initial conditions), of the states must be input as part of the system model description.

Variables: Variables are all other dynamic time varying quantities in the system model that are not states. In general, variables are related to states by algebraic relationships.

Parameters: Parameters are constant scalar quantities in the system model. Parameters can be manipulated by the analyst to alter the system model. All parameter values* should be input as part of the system model description.

Tables: Tables are constant nonscalar quantities in the system model. Tables are used to represent algebraic functional relationships with one or two independent variables. All table values must be input as part of the system model description.

The format for the ADD commands is that the command is followed by one or more phrases that contain the names of the states, variables, parameters, or tables. In addition to each table name, a number, specifying the amount of storage to be allocated for that table must be given. This number is positive if the table is two dimensional and negative if one dimensional, with absolute value determined by the formula:

$$N = 3 + I + J + D$$

N = the total storage required by the table, in words.

* For certain components, default values are provided for some parameters.

I = the number of data points in the primary independent variable table.

J = the number of data points in the secondary independent variable table. (J=0 if there is only one independent variable.)

D = the number of data points in the dependent variable table. (D=I if there is only one independent variable. D=I*J if there are two independent variables.

The following example illustrates the use of FORTRAN STATEMENTS in the parameter study model:

Example 2.2

```
MODEL DESCRIPTION      PARAMETER STUDY
          .
          .
          .
ADD TABLES = WIND,802
LOCATION = 41   TI
FORTRAN STATEMENTS
C          READ WIND VELOCITY DATA
      WVIWD = TBLU2(TD TI,DY TI,WIND(35),WIND(4),
     1 WIND(59),0,0,24,-31,24,31)
LOCATION = 71   WD     INPUTS = TI
          .
          .
          .
```

In this model, Fortran is used to input wind velocity data. The wind table, denoted WIND, consists of up to 31 days of hourly wind speeds. Hence, as described previously, the total storage required is 3+24+31+24*31=802. The Fortran is inserted after time of day and day of the year are computed in TI. In this case, N=24, M=31, the data is equal spaced, and extrapolation is used to provide velocity data over each 24 hour period. The variable WVIWD is the name at the wind input to WD generated by the precompiler. Fortran insertion in the model ends when the LOCATION=71 ... command is read and a call to the subroutine WD is then generated.

LIST STANDARD COMPONENTS

The LIST STANDARD COMPONENTS command phrase causes the program to print a list of all standard components. For each standard component, lists of inputs, outputs, and tables for that component are provided. For each input, the physical quantity name and port number is given. For each output, the physical quantity name, port number, and the letter S, if the quantity is a state is given. For each table, the table name, the number of independent variables and the maximum amount of storage allowed is provided. This command is usually given as the first command of a model description and will result in a list of all standard component information as the first output from the Model Generation program.

2.2 NAMING CONVENTION

All standard components are given names consisting of two characters, the first of which is alphabetical. Thus we have WT for wind turbine, GE for generator, WD for wind model, etc. Where multiple components of the same type are required, the second character is used to distinguish between the different models of the same basic component type. A specific component in a model can be distinguished from other components of the same type by adding one

more character to the standard component name. This character is usually numeric but can also be alphabetical or blank. Thus a given model can contain up to 37 different components of the same standard component type. For example, a model with ten different wind turbines might have these components designated as:

WT1,WT2,WT3,.....,WT8,WT9,WTA

2.2.1 Variable, Parameter, and Table Naming Conventions

All of the input, output, and tabular quantities required by each component in a system model must have unique FORTRAN names. These quantities are given names consisting of up to three characters that describe the physical quantity they represent.

Since a single component may have several inputs or outputs of the same physical quantity, the program adds the port number to the second or third character of the physical quantity name to prevent such a duplication.

The physical quantities that are outputs of a given component are identified by adding the three character name of that component to the three character name of the physical quantity. In this way, unique six character FORTRAN names are generated for all output quantities of the system model components.

Input quantities to a component that are driven by another component carry the names of the component that drives them. Any inputs that are not driven by other model components are assumed to be parameters and are assigned the name of the component for which they are an input.

If a component should require tabular data as an input, unique table names are generated just as scalar input quantity names by adding the component

name to the table name. A pictorial representation of the character assignment in component, variable, and table names is given in Figure 2.2-1.

2.3 MODEL SCHEMATIC

The Model Generation program produces a schematic diagram of the system being modeled. This schematic is crude but is inexpensive and does not have the flow time delays associated with more elaborate plotting methods. Its purpose is to provide a means of rapidly locating errors in the model description.

In order to construct a schematic diagram in an efficient manner with a reasonable size program, it was necessary to establish some simple rules for symbol generation, component connection paths, and labeling. If these rules are kept in mind when laying-out a schematic for the system, the SIMWEST produced schematic will match that developed by the analyst. If the rules are violated by the analyst's schematic, the SIMWEST schematic should still be correct, but may contain some unusual component connection paths and some labeling information may be overwritten.

2.3.1 Standard Schematic Form

The SIMWEST schematic diagrams are produced on a standard 11" by 14" lineprinter page with 80 component locations per page. A standard form containing only the location numbers can be obtained by executing the Model Generation program with the single program command, PRINT. This form can then be reproduced and the copies used as forms for drawing system model schematics.

2.3.2 Input Quantity Labeling

The names of the physical quantities that are input to one component from another component are listed adjacent to the downstream component symbol.

INPUT/OUTPUT OR TABLE NAMES

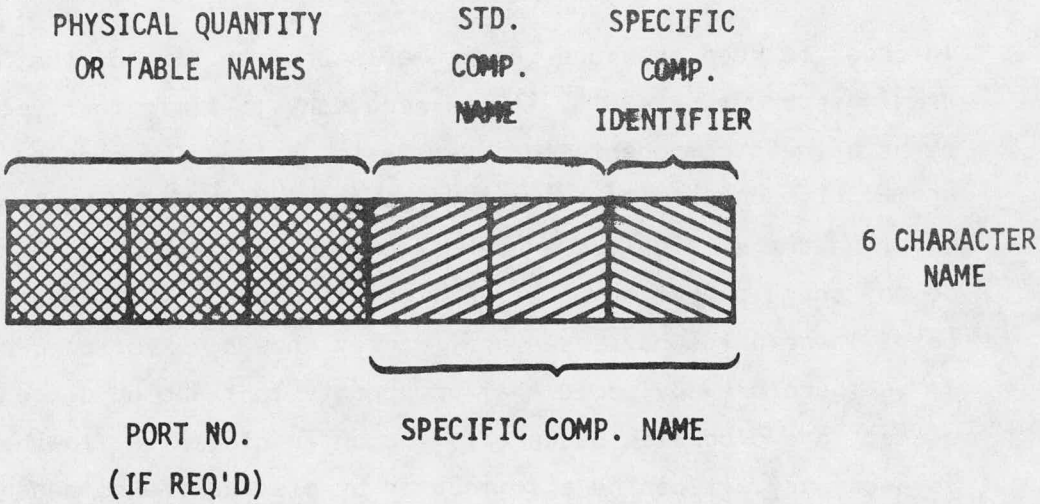

FIGURE 2.2-1 CHARACTER ASSIGNMENT INPUT/OUTPUT OR TABLE NAME

These labels are placed near the connecting line that joins the two components. Since these names are composed of the physical quantity name and the name of the component that generates the information, the source of the input is evident from the name itself. Parameter and tabular inputs to a component are not shown on the schematic. These constant inputs are described in the Input Requirements List.

2.3.3 Component Connection Paths

In order to keep the core requirements and run time of the SIMWEST schematic drawing subroutine small, it was necessary to limit the types of connecting paths between components to a few basic routes. These paths are shown in Figure 2.3-1. Connections between components on the same horizontal or vertical line are straightforward. However, connections between components that do not share a horizontal or vertical line require at least a two segment path. These paths have been arbitrarily chosen to follow a clockwise route. It is therefore advisable that components that are on diagonal locations be placed in a clockwise sequence. If counter-clockwise flow between components is necessary, it can be accommodated by placing the components on the same horizontal or vertical lines.

The SIMWEST schematic drawing subroutine makes no attempt to go around components that get in the way of a connection path. Such components are "run-over" by the connecting line.

2.3.4 Additional Pages

The SIMWEST schematic diagram may be broken down into as many pages as are necessary. No attempt is made to draw connecting paths between components located on different pages. It is therefore advisable to minimize the number of connecting paths between pages. This can usually be done by grouping

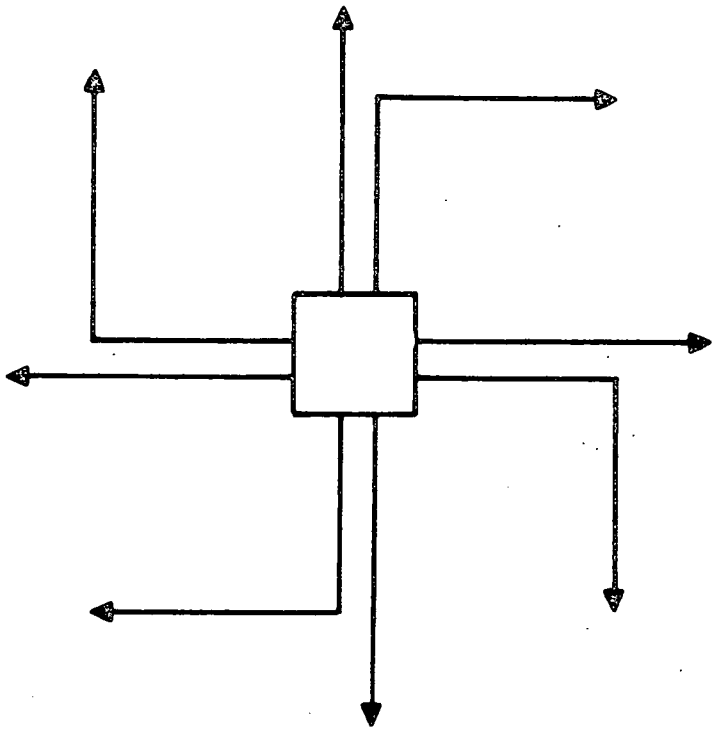

POSSIBLE OUTPUT PATHS

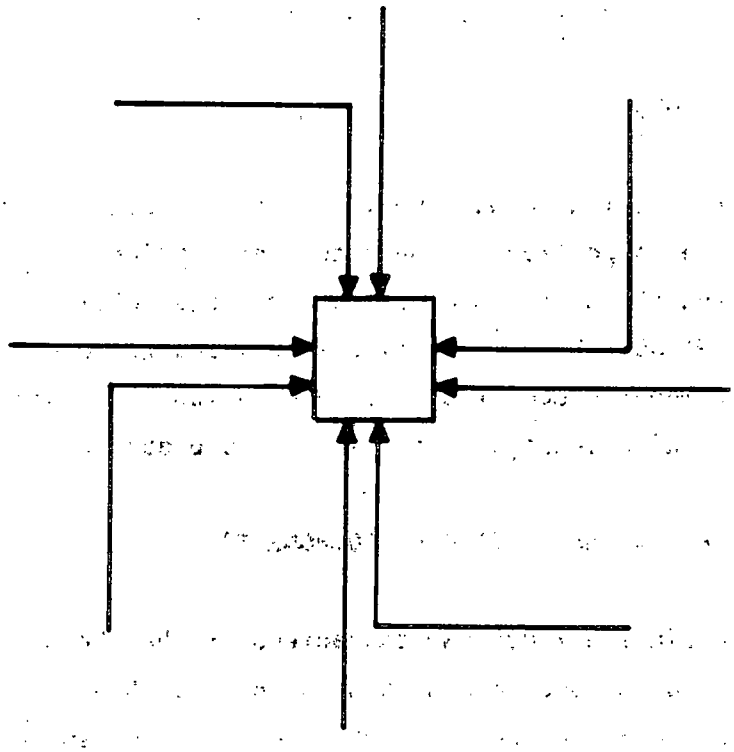

POSSIBLE INPUT PATHS

FIGURE 2.3-1 COMPONENT CONNECTION PATHS

components with many interconnections on the same page and placing page boundaries between such groups of components.

2.3.5 Guidelines for Schematic Layout

The following guidelines may help in creating schematic layouts that can be duplicated by the SIMWEST program.

1. Try to place connected components on the same horizontal or vertical line.

2. Avoid placing components on adjacent location points.

3. Place diagonal components so that flow is clockwise.

4. Group components to minimize flow paths between pages.

2.4 WARNING MESSAGES

One or more of the following warning messages will occur if the program is unable to interpret a portion of the model description or encounters problems in assembling the system model. These messages will be preceded by: *** WARNING *** or *** NOTICE ***. The symbols xxx and zzz are used to indicate phrases from the model description that are included as part of the warning message. The following messages are listed in alphabetical order:

1. CAN'T IDENTIFY xxx AS A STANDARD COMPONENT

   xxx will contain the first two characters of the phrase which cannot be identified as a command or standard component. This message will often follow other warning messages as the program makes successive attempts to interpret the given phrase.

2. CAN'T IDENTIFY xxx AS A VALID INPUT COMPONENT TO zzz

The component xxx cannot be found in the list of components for the current system model.

3. CAN'T LOCATE xxx AS AN INPUT COMPONENT TO LOCATION n

This message indicates that the component xxx, which provides inputs to location n in the schematic, has not been assigned a location number. Check for a missing LOCATION statement or misspelling of the component name.

4. COMPONENT xxx DEFINITION WASN'T COMPLETED BEFORE STARTING THE DEFINITION OF COMPONENT zzz

The command INPUTS was not given between the component names xxx and zzz. Check for proper spelling of INPUTS and a valid delimiter after the phrase xxx.

5. COMPONENT xxx HAS ALREADY BEEN DEFINED

The component xxx was defined in a previous LOCATION statement.

6. LOCATION NO. xxx FOR COMPONENT zzz HAS LAST TWO DIGITS OUTSIDE THE ALLOWABLE RANGE 1 TO 80. NO SYMBOL WILL BE PLACED IN SCHEMATIC FOR THIS COMPONENT

This message will occur at the end of the model description for a component zzz which has an invalid location number. The system model may still be valid but the schematic will not contain this component.

7. NO xxx OUTPUTS MATCH UNSATISFIED zzz INPUTS

Check that it was intended to drive component zzz with component xxx or that the inputs to zzz have been previously satisfied by other component connections.

8. TABLE NAME xxx MUST BE FOLLOWED BY A NUMERIC DIMENSION RATHER THAN zzz

When using the ADD TABLES command, it is necessary to provide the maximum amount of storage to be allocated for the table as well as the table name. This storage value must be a numeric quantity.

9. xxx IS NOT A VALID INPUT QUANTITY OR PORT DESIGNATION FOR COMPONENT zzz

The phrase xxx cannot be located as one of the input quantities or input ports of the component zzz. No connections will occur. Check the list of standard components for the proper spelling or port designations for this component.

10. xxx IS NOT A VALID LOCATION NUMBER

The LOCATION command must be followed by a numeric location number.

11. xxx IS NOT A VALID PORT DESIGNATION FOR INPUT COMPONENT zzz. ERRONEOUS CONNECTIONS MAY OCCUR.

The phrase xxx cannot be located as a valid input port for the component zzz. Connections will be attempted using the upstream output port that was identified.

2.5 MODEL GENERATION LIMITATIONS

Certain limitations exist in the Model Generation program due to array dimensions within the program. For most applications these limits should not be encountered. However, if they should be encountered they can usually be extended at the expense of larger core requirements to execute the program. The following table describes these limitations:

Limitation Description	Maximum Value
Standard components in library	150
Components per model	200
Inputs per any standard component	50
Outputs per any standard component	50
Tables per any standard component	15
Tables per model	100
Table dimension (words)	960

THIS PAGE
WAS INTENTIONALLY
LEFT BLANK

3.0 SIMULATION PROGRAM

Once a model has been generated as described in Section 2, the user must describe the simulation he wishes to perform. This involves specifying the various parameters detailing the model components and setting the models initial conditions. It involves defining input data tables and the type and quantities of printed output, both tabular and plotted. The user must also specify the number of iterations he wishes to perform at each time step and the maximum number of component diagnostics. This section describes in detail the commands for specifying the simulation and gives some example output.

3.1 MODEL INPUT DATA

A dynamic system model requires that the values of numerous model parameters, tables and initial conditions, be provided to complete the model description. Sections 3.1.1, 3.1.2 and 3.2 describe the methods used to specify parameter values, tables, and initial conditions.

3.1.1 Scalar Data

PARAMETER VALUES (Default values = .99999)

This program command allows the numeric values of parameters to be loaded into the system model. The PARAMETER VALUES command is followed by one or more parameter names followed by a numeric value. Each name and its value are separated by one of the standard delimiter symbols. This command is used to specify the values of all system model parameters at the beginning of an analysis. It may also be used at any point between analyses to modify the value of one or more model parameters. A default value of .99999 is provided by the Model Generation program for all parameters not so specified.

Example 3.1-1

PARAMETER VALUES = CYCLES = 6.01, TO TI = 0, EC WP = .2,
CR CM = 15, LE CM = 30, MDEHS = 4.E5, ...

3.1.2 Tabular Data

If tabular data is required by the system model, it should be loaded before any of the simulation commands described in Section 3.4 are issued. Tables may be modified between analyses by loading new values. The tables required by a SIMWEST generated model are specified in the Input Requirements List. These tables may have either one or two independent variables. All data items are in a free field format with each item separated by one of the standard delimiters: comma [,], equal sign =[,]left or right parenthesis () , or three or more consecutive blank spaces. The data items required for each table are placed on cards as follows:

Card 1	TABLE	table name	NX	NZ
Card 2*	Z table values			
Card 3*	X table values			
Card 4*	Y table values			

where:

Table Name	- The six character table name generated by the Model Generation program.
NX	- The number of points in the primary independent variable table.
NZ**	- The number of points in the secondary independent variable table.
Z table **	- Table of NZ secondary independent variable values.
X table	- Table of NX independent table values.
Y table	- 1 or NZ tables of NX dependent variable values.

* As many cards as required may be used. Each table must start with a new card and NZ, NX, and NX*NZ points must be given per table.

** These items are omitted for tables with one independent variable.

A copy of all tabular input data is printed as it is interpreted from data cards. The following example shows the data cards for a one and a two independent variable table.

Example 3.1-2

```
Card 1     TABLE, TABONE,     10
Card 2     1, 2, 3, 4, 5, 6, 7, 8, 9, 10
Card 3     11, 12, 13, 14, 15, 16, 17, 18, 19, 110
Card 4     TABLE, TABTWO, 5, 4
Card 5     10.3, 20.4, 30.5, 40.6
Card 6     1, 2, 3, 4, 5
Card 7     11, 12, 13, 14, 15
Card 8     21, 22, 23, 24, 25
Card 9     31, 32, 33, 34, 35
Card 10    41, 42, 43, 44, 45
```

The printout of these tables would be:

```
                    TABLE TABONE
     PRIMARY INDEPENDENT VARIABLE TABLE
1.000  2.000  3.000  4.000  5.000  6.000  7.000  8.000  9.000  10.00
          DEPENDENT VARIABLE TABLE
11.00  12.00  13.00  14.00  15.00  16.00  17.00  18.00  19.00  110.00
                    TABLE TABTWO
     SECONDARY INDEPENDENT VARIABLE TABLE
10.30        20.40        30.50        40.60
      PRIMARY INDEPENDENT VARIABLE TABLE
1.000        2.000        3.000        4.000        5.000
          DEPENDENT VARIABLE TABLE
11.00        12.00        13.00        14.00        15.00
21.00        22.00        23.00        24.00        25.00
31.00        32.00        33.00        34.00        35.00
41.00        42.00        43.00        44.00        45.00
```

3.2 INITIAL CONDITION AND INTEGRATION CONTROLS

INITIAL CONDITIONS (Default value = 0)
INT CONTROLS (Default value = 1.0)

These program commands may be used to specify initial condition values and the integrator status, (either active (=1) or frozen (=0)). Default values of 0. for initial conditions and 1 for integration controls are furnished by the simulation program. However, it is strongly recommended that values appropriate to the particular system model be furnished for the initial conditions.

Each of these commands is followed by phrases of the form of a state name followed by a numeric value.

Example 3.2-1:

```
INITIAL CONDITIONS = MA HS = 1.6E6, E  TS = 600, VDELO = 0, ....
INT CONTROLS = MA HS = 0, E  TS = 1, VDELO = 1, .....
```

ALL STATES (Default Condition)
NO STATES

These program commands may be used to activate or freeze all system integrators. These commands are normally used together with the INT CONTROLS command to specify the desired integrator configuration.

3.3 INITIAL CONDITION STORAGE COMMANDS

XIC-X
XIC-XIC1
XIC-XIC2
XIC-XIC3
XIC1-XIC
XIC2-XIC
XIC3-XIC

These program commands are used to transfer data from the current state vector, X, to the initial condition vector, XIC, and between the XIC vector and three auxiliary initial condition vectors XIC1, XIC2, XIC3.

Example 3.3-1

XIC1-XIC, XIC-X, XIC2-XIC

The three program commands shown above would take the current operating point (initial condition vector) and store it in vector XIC1; then transfer the current state, X, into XIC; and then store that value of XIC in XIC2.

3.4 SIMULATION COMMANDS

SIMULATE

This program command initiates simulation operation. Associated with this command are the program values:

			Default Values:
TINC	=	time increment, hours	0.1
TMAX	=	duration of the simulation run hours	1.0
OUTRATE	=	output rate	1
PRATE	=	print rate	1
PRINT CONTROL	=	print control variable	0

These program commands specify the integration time increment, duration of simulation run, the simulation output rate, the printing rate, and the quantity of printing, at each point in time. These quantities should be specified before the first issuance of the SIMULATE command.

The Time increment, TINC, provides the integrator time step size, in hours, for the integrator. TINC also provides the report interval for which data will be available for printing or plotting. The default value for TINC is 0.1.

The duration of a simulation calculation in hours, is specified by the TMAX parameter. The default value of TMAX is 1.

The output rate parameter, OUTRATE, determines the sampling rate at which simulation data is added to plots. Thus, if OUTRATE is set equal to 10, data will be plotted every 10th time increment, TINC. The default value of OUTRATE is 1. OUTRATE should only be set to positive integer values.

The number of data samples plotted for a simulation analysis is thus given by:

$$\text{No. of Plotted Samples} = \frac{\text{TMAX}}{\text{TINC*OUTRATE}} + 1$$

For most simulation operation, the plotted output specified by the DISPLAY commands is the primary output and no line printer output is used. However, for diagnosing problems in a simulation, the line printer options provided by the PRINT CONTROL parameter allow large amounts of detailed information about the simulated system to be obtained.

The value of the PRINT CONTROL parameter controls the quantity of data printed at each print report interval as shown in Table 3.4-1. Options 1 through 4 give "snap-shots" of all states, rates, variables, and parameters of the system model at a particular point in time. Option 5 provides tabular lists

of up to 10 specified quantities.* The default value for PRINT CONTROL is 0.

TABLE 3.4-1

Print Control Values

PRINT CONTROL	Resultant Lineprinter Output.
0	None (Default Condition)
1	All states, rates, and time
2	All states, rates, variables, and time
3	All states, rates, variables, and parameters at time = 0
4	All states, rates, variables, and parameters
5	Time and the quantities specified via PRINT VARIABLES command.

The PRATE parameter determines the sampling rate at which the simulation data specified by the PRINT CONTROL parameter is presented on the line-printer. Thus, if PRATE is set equal to 5, data will be printed on the line printer every 5th time it is added to the output plots. The rate of output to the lineprinter can never be greater than that to the plots. The default value of PRATE is 1. PRATE should only be set to positive integer values.

The number of data samples printed for a simulation analysis is thus given by:

$$\text{No. of Printed Samples} = \frac{\text{TMAX}}{\text{TINC*OUTRATE*PRATE}} + 1$$

*See the PRINT VARIABLES command description below.

Example 3.4-1:

```
PRINT CONTROL = 2, TINC = .01, TMAX = 10.,
OUTRATE = 10, PRATE = 10, SIMULATE
```

In the example, the simulation would run for 10 hours. Plotted output would occur every .1 hour, (10* .01), and printed output would occur every 1. hour (10* 10* .01).

PRINT VARIABLES

This program command allows up to ten variables to be specified for printing under option 5 of the PRINT CONTROL. This command is followed by from one to ten state, rate, or variable names separated by delimiters. This command wipes out all previously stored PRINT VARIABLES names.

Example 3.4-2:

```
PRINT VARIABLES = MA HS, E  TS, VDELO
```

3.5 PLOT DESIGNATION COMMANDS

DISPLAY1
DISPLAY2
DISPLAY3
DISPLAY4
DISPLAY5
DISPLAY6

These program commands may be used to define the quantities to be displayed by lineprinter plots for simulation calculations. These commands must be issued <u>before</u> the simulation analysis is requested. From one to five plots may be specified per display. Each plot is specified by stating the dependent variable and the independent variable separated by the letters VS. If

desired, the independent and dependent axis scale ranges can also be specified. The independent scale range is specified by the word XRANGE followed by the minimum and maximum values for this scale. The dependent scale similarly is specified by the word YRANGE. If scale ranges are not specified, values will be used that span the given data.

SI MANUAL SCALES

SI AUTO SCALES (Default Condition)

The SI MANUAL SCALES command allows the plotted output requested by the DISPLAY commands to be plotted on manual scales specified by the YRANGE and XRANGE commands. The SI AUTO SCALES command can be used to return plotting to the automatic scaling mode. Auto scales are selected so that they span each plotted quantity. The auto scale option is the default used until manual scales are requested. The PRINTER PLOTS command is also required to obtain plots.

Example 3.5-1:

```
SI MANUAL SCALES, PRINTER PLOTS
DISPLAY1
WV2WD, VS, TIME, YRANGE = 10,40
P1 PD, VS, TIME, YRANGE = 0,1000
P2 PD, VS, TIME, YRANGE = 0,1000
DISPLAY2
P2 IV, VS, TIME
RE2BA, VS, TIME
RE1LO, VS, TIME
DISPLAY3
P1 PD, VS, P2 PD, YRANGE = 0,1000, XRANGE = 0,1000
```

TITLE

The TITLE command allows a title to be placed on all plotted output. Up to 74 characters may follow the delimiter that follows the TITLE command. The TITLE command may be changed before each analysis. Once defined, the title remains in effect until a new title is entered.

Example 3.5-2:

TITLE = BATTERY TEST MODEL

3.6 ITERATION AND DIAGNOSTIC CONTROL

There are three built-in parameters in any SIMWEST model : CYCLES, DLINES and RESET. These parameters are specified similar to component parameters using the PARAMETER VALUES command.

CYCLES controls the number of iterations through the model to obtain steady state. If CYCLES $\leq$ 0. then only one pass is made through the model. If CYCLES is a positive integer then the number of iterations through the model is equal to CYCLES + 1. If cycles is positive, but not an integer, then the number of iterations is equal to the smallest integer value exceeding cycles. A maximum of 20 iterations are permitted per time step. Most of the simple models of Section 8 require between four and six iterations per time step to attain steady state. A complex model with cascaded logic components may require more.

The task of finding the correct value for CYCLES is facilitated by the program printing at each time step all variables which have a greater than 5% change in value in the last iteration.

Since output statistics are only updated the last iteration, many of the variables printed indicating nonconvergence are just statistics, and as such should be ignored.

DLINES controls the amount of convergence related printout to be controlled as well as the amount of diagnostic printout put out by the library components. If DLINES >0 then the total number of diagnostic printouts is no greater than DLINES. Figure 3.6 shows a typical section of diagnostic printout using DLINES >0. If DLINES <0 then only library component diagnostics are printed with no greater than - DLINES of output. Typically, DLINES = 100 is sufficient to catch most simulation errors per run.

```
        PC3PA    NONCONVERGENCE, OLD VALUE=        4.209    NEW VALUE=        6.109
        SR UT    NONCONVERGENCE, OLD VALUE=      177.720    NEW VALUE=      264.359

        PC3PA    NONCONVERGENCE, OLD VALUE=        6.109    NEW VALUE=        7.054
        SR UT    NONCONVERGENCE, OLD VALUE=      264.359    NEW VALUE=      312.718

FLYWHEEL KINETIC ENERGY       39.875 FALLS BELOW MINIMUM REQUIREMENT        40.000

FLYWHEEL CLUTCH LOSS          1.217 EXCEEDS DELIVERABLE POWER          .400

        SP MO    NONCONVERGENCE, OLD VALUE=      553.569    NEW VALUE=      601.994
        SPCFL    NONCONVERGENCE, OLD VALUE=      543.583    NEW VALUE=      590.798
        PC3PA    NONCONVERGENCE, OLD VALUE=        7.054    NEW VALUE=        8.152
        SR UT    NONCONVERGENCE, OLD VALUE=      312.718    NEW VALUE=      370.217
```

FIGURE 3.6 TYPICAL DIAGNOSTIC OUTPUT

RESET controls the initialization value for the random number generators if several simulations are run back to back. If RESET >0 (Default) then the same random numbers are used for each simulation. If RESET ≤ 0 then the random numbers at the start of each simulation are obtained from the last value at the end of the previous simulation.

3.7 DEFINE COMMANDS

DEFINE STATES

DEFINE RATES

DEFINE PARAMETERS

DEFINE VARIABLES

These program commands may be used to define the alphanumeric names that will be used to refer to states, rates, parameters, and variables. All system models formed by the Model Generation program have model related names generated for all states, variables, and parameters in the model. State variable derivatives, (Rates), are generated as R1, R2,... for all models. R1, R2, ... refer to the rates of the first, second,... states respectively. If it is desired to replace these machine generated names with other names, the DEFINE command may be used to substitute any eight character name of the analyst's choosing. These names are associated with the corresponding numeric quantities located in the labeled commons /CX/, /CXDOT/, /CP/, and /CV/. The appropriate location for each quantity is printed out along with the quantity name prior to each simulation. Each of these commands is followed by phrases containing the location numeric followed by an alphanumeric name with one to eight characters the first of which must be alphabetic.

Example 3.7:

```
DEFINE STATES
1 = PRESSURE, 2 = STROKE, 5 = VELOCITY, 7 = ANGLE

DEFINE PARAMETERS
5 = MASS, 35 = DCT AREA
DEFINE VARIABLES, 1 = T OUTLET, 2 = LIQ H2O
```

Note that the program commands, numeric values and alphanumeric names must be separated by delimiters which are: comma [,], equals [=], left parentheses [(], right parenthesis [)], or three or more consecutive spaces.

3.8 EXAMPLE OUTPUT

Figure 3.8 shows a sample of the output print format generated using PRINT CONTROL = 3. This sample is taken from the Wind Turbine and File Read run

```
        TIME =    .0000                                   STATES
  1 VDELU    =   .00000

                                                          RATES
  1 H1       =   5.0009

                                                          VARIABLES
  1 T  TI    =   .00000     2 TO TI    =   .00000     3 TH TI    =   .00000     4 DW TI    =   1.0000     5 DY TI    =   1.0000
  6 HY TI    =   1.0000     7 HY TI    =   1.0000     8 VARTAW   =   18.477     9 N  TAW   =   446.00    10 TO TAW   =   .00000
 11 M  TAW   =   .25000    12 HV2WD    =   18.477    13 HV WD    =   18.477    14 AV WD    =   20.354    15 M  WD    =   58.846
 16 TIMWD    =  -1.0000    17 P2 WT    =   241.84    18 TO WT    =   72080.    19 CO WT    =   .12500    20 GR WT    =   76.391
 21 RAPWT    =   795.36    22 MT WT    =   72080.    23 MPUWT    =   241.84    24 SP WT    =   30.230    25 P2 GR    =   229.65
 26 TO GR    =   895.98    27 PL GR    =   12.184    28 EF2GR    =   .94961    29 MP2GR    =   .10000+11 30 RS1GR    =   23.631
 31 SAMHG    =   1.0000    32 AV HG    =   241.84    33 SD HG    =   58485.    34 P2 GE    =   217.43    35 EE GE    =   .97710
 36 RS GE    =   1605.2    37 PL GE    =   12.224    38 EF2GE    =   .89906    39 MP2GE    =   750.00    40 MPNGE    =   .28991
 41 SP GE    =   27.179    42 VARTAL   =   572.02    43 N  TAL   =   446.00    44 TO TAL   =   .00000    45 M  TAL   =   .25000
 46 RE1LU    =   636.24    47 LO2LU    =   572.02    48 SRELU    =   71.502    49 SDELU    =   27.179    50 PC LU    =   38.011
 51 TIMLU    =  -1.0000    52 CN LU    =  -1.9575

                                                          PARAMETERS
  1 TO TI    =   .00000     2 NSTTAW   =   .00000     3 ITFTAW   =   1.0000     4 VO WT    =   21.000     5 VR WT    =   28.350
  6 RSGWT    =   1800.0     7 BR WT    =   80.000     8 EC WT    =   1.0000     9 AD WT    =   .23000-02 10 LAMWT    =   9.4000
 11 CPMWT    =   .41000    12 CP WT    =   .99999    13 CC WT    =   16000.    14 CM WT    =   2000.0    15 EF1GR    =   .99999
 16 MP1GR    =   .10000+11 17 CC GR    =   1000.0    18 CM GR    =   200.00    19 F1 HG    =   .00000    20 F2 HG    =   .00000
 21 F3 HG    =   .00000    22 F4 HG    =   1.0000    23 F5 HG    =   .00000    24 F6 HG    =   .00000    25 F7 HG    =   .00000
 26 F8 HG    =   .00000    27 F9 HG    =   .00000    28 F10HG    =   .00000    29 F11HG    =   .00000    30 F12HG    =   .00000
 31 F13HG    =   .00000    32 F14HG    =   .00000    33 F15HG    =   .00000    34 F16HG    =   .00000    35 FA HG    =   67.857
 36 FUPHG    =   1000.0    37 FLUHG    =   50.000    38 RAPGE    =   750.00    39 RSYGE    =   1800.0    40 RASGE    =   .10000-01
 41 DA GE    =   .20000    42 SR GE    =   .50000-02 43 VO GE    =   400.00    44 CC GE    =   1000.0    45 CM GE    =   200.00
 46 NSTTAL   =   .00000    47 ITFTAL   =   2.0000    48 NC LO    =   .57400-02 49 CT LO    =   4.0000    50 MN LO    =   .00000
 51 STDLU    =   6.0000    52 VE LU    =   .23000-01 53 CYCLES   =   2.0100    54 DLINES   =   .99999    55 RESET    =   .99999

        TIME =    12.00                                   STATES
  1 VDELU    =   97.264

                                                          RATES
  1 H1       =   .63123

                                                          VARIABLES
  1 T  TI    =   12.000     2 TO TI    =   12.000     3 TH TI    =   12.000     4 DW TI    =   1.0000     5 DY TI    =   1.0000
  6 HY TI    =   1.0000     7 HY TI    =   1.0000     8 VARTAW   =   13.444     9 N  TAW   =   446.00    10 TO TAW   =   .00000
 11 M  TAW   =   .25000    12 HV2WD    =   13.444    13 HV WD    =   39.006    14 AV WD    =   20.354    15 M  WD    =   58.846
 16 TIMWD    =  -1.0000    17 P2 WT    =   36.664    18 TO WT    =   10956.    19 CO WT    =   12.125    20 GR WT    =   76.391
 21 RAPWT    =   795.36    22 MT WT    =   .23555+06 23 MPUWT    =   795.36    24 SP WT    =   4861.1    25 P2 GR    =   35.198
 26 TO GR    =   137.67    27 PL GR    =   1.4660    28 EF2GR    =   .95999    29 MP2GR    =   .10000+11 30 RS1GR    =   23.572
 31 SAMHG    =   97.000    32 AV HG    =   38889.    33 SD HG    =   .24279+08 34 P2 GE    =   27.445    35 EE GE    =   .97710
 36 RS GE    =   1800.7    37 PL GE    =   7.7533    38 EF2GE    =   .74853    39 MP2GE    =   750.00    40 MPNGE    =   .93304
 41 SP GE    =   4256.0    42 VARTAL   =   1024.2    43 N  TAL   =   446.00    44 TO TAL   =   .00000    45 M  TAL   =   .25000
 46 RE1LU    =   1002.0    47 LO2LU    =   1024.2    48 SRELU    =   8481.5    49 SDELU    =   4256.0    50 PC LU    =   50.180
 51 TIMLU    =  -1.0000    52 CN LU    =  -1.9575

        TIME =    24.00                                   STATES
  1 VDELU    =   239.65
```

FIGURE 3.8 SAMPLE PRINTER OUTPUT

described in Section 8.1, which is a very simple model. At each print time the output quantities are indexed by number and component name as they occur in the model. For example, first all the variables for component TI are printed, then all variables for component TAW, etc. The parameter values at time = 0 show both the input values and the default parameters. After T = 0 only the states, rates, and output variables are printed. Since all the model connection variables and output variables are printed, this mode is especially valuable for program debugging and analysis at a fixed time. The printer plots, samples of which are shown in Section 8, are useful for monitoring the time behavior of critical parameters such as energy in storage and percent of load delivered by storage.

4.0 JOB CONTROL PROCEDURES

In this section, we describe job control procedures for running and maintaining the SIMWEST programs. For the convenience of the user, a number of procedure files have been set up which simplify the user control cards required. In Section 4.1, we describe the control cards for executing the model generation and analysis programs. Section 4.2 describes the procedures to maintain the programs and update the component library.

4.1 MODEL GENERATION AND ANALYSIS EXECUTION

Figure 4.1-1 shows an overview of the program structure to execute a simulation run. The program FILOAD is only executed when the component library is updated, and is thus described in the next section. The user input data for the model generation program is put on a file called EASYCARDS. A procedure file called XQTEASY is then used to generate the model Fortran and compile this model. Similarly, the user input data for the analysis program is put on a file called NONSIMCARDS, and a file called XQTANALYSIS maps the relocatable elements into absolute file elements, and executes both the simulation and printer plot programs.

A job control stream to execute these programs in a batch environment is given by:

```
@RUN ...
@DELETE,C EASYCARDS.
@ASG,UP EASYCARDS.
@DATA,IL EASYCARDS.
          .
          .
          .
     INPUT DATA DECK
       FOR MODEL
          .
          .
          .
@END
@ASG,A XQTEASY.
```

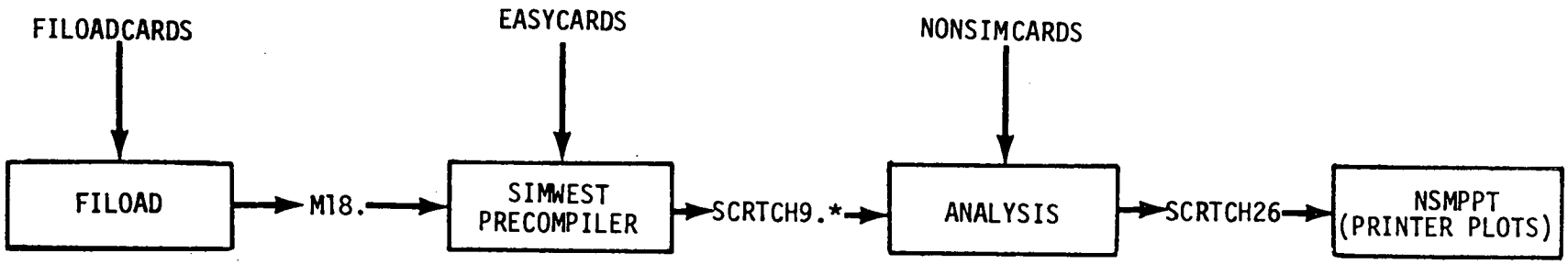

*SCRTCH9 IS FORTRAN SOURCE CODE OUTPUT

FIGURE 4.1-1 SIMWEST PROGRAM EXECUTION STRUCTURE

```
@ADD,PL XQTEASY.
@DELETE,C NONSIMCARDS.
@ASG,UP NONSIMCARDS.
@DATA,IL NONSIMCARDS.
          .
          .
          .
     INPUT DATA DECK
      FOR ANALYSIS
          .
          .
          .
@END
@ASG,A XQTANALYSIS.
@ADD,PL XQTANALYSIS.
@FIN
```

The job control procedures XQTEASY and XQTANALYSIS are shown in Figures 4.1-2 and 4.1-3. If a user is creating data inputs from a terminal, then it may be somewhat simpler to create new job control procedures similar to XQTEASY and XQTANALYSIS, but substituting his data input file names for EASYCARDS and NONSIMCARDS, respectively. If the same model is used for a series of runs, then only the analysis program is required for execution. However, it is safer and also relatively inexpensive to execute both programs when using the above job stream. Whenever the file read component is desired, the user must either substitute his file for F1 or F2, or add the following job cards to XQTANALYSIS:

```
@ASG,A MYFILE.
@USE M, MYFILE.
```

where MYFILE is the user time history file and M is a unit number between 13 and 18. (See 7.38 for a discussion of the tape/file read component.)

4.2 PROGRAM MAINTENANCE AND LIBRARY UPDATES

Whenever the component library is updated, the user must compile the Fortran code and run the FILOAD program to furnish the model generation program com-

```
@HDG  SIMWEST MODEL GENERATION
@ASG,AX MGABS.
@ASG,A  M18.
@USE 18,M18.
@ASG,T M7.
@USE 7,M7.
@ASG,T SCRTCH8.
@USE 8,SCRTCH8.
@DELETE,C SCRTCH9.
@ASG,UP SCRTCH9.
@USE 9,SCRTCH9.
@ASG,T SCRTCH10.
@USE 10,SCRTCH10.
@ASG,T SCRTCH11.
@USE 11,SCRTCH11.
@ASG,T SCRTCH12.
@USE 12,SCRTCH12.
@ASG,A  EASYCARDS.
@USE 5,EASYCARDS.
@XQT MGABS.EASY
@ASG,AX ASRO.
@ASG,AX ASSI.
@ADD,PL 9.
@FREE 18.,7.,8.,9.,10.,11.,12.
```

FIGURE 4.1-2 XQTEASY JOB CONTROL FILE

```
@HDG  SIMWEST ANALYSIS
@ASG,AX MAPANALYSIS.
@ADD,PL MAPANALYSIS.
@ASG,AX ASABS.
@ASG,AX F1.
@USE 11,F1.
@ASG,AX F2.
@USE 12,F2.
@ASG,T SCRTCH25.
@USE 25,SCRTCH25.
@DELETE,C SCRTCH26.
@ASG,UP SCRTCH26.
@USE 26,SCRTCH26.
@ASG,AX NONSIMCARDS.
@USE 5,NONSIMCARDS.
@XQT ASABS.NONSIM
@XQT ASABS.NSMPPT
@FREE 11.,12.,25.,26.
```

FIGURE 4.1-3 XQTANALYSIS JOB CONTROL FILE

ponent input and output name lists. A job control stream to compile a new component denoted DC and add it to the component library is given by:

```
@ASG,T SOURCE.
@DATA,IL SOURCE.
@FOR,IS COSI.DC,CORO.DC
          .
          .
          .
    USER FORTRAN SUBROUTINE DC
          .
          .
          .
@END
@ASG,A COSI.
@ASG,A CORO.
@ADD,PL SOURCE.
@ASG,A CMPLCO.
@ED,U CMPLCO.
ADD SOURCE.
EXIT
```

If an old component is to be updated, then one can edit the source code on CMPLCO and recompile entirely, or copy the edited subroutine including the @FOR,IS control card onto a new file and recompile. A job stream to execute the FILOAD program is given by:

```
@DELETE,C FILOADCARDS.
@ASG,UP FILOADCARDS.
@DATA,IL FILOADCARDS.
          .
          .
          .
    USER INPUT DATA
      FOR FILOAD
          .
          .
          .
@END
@ASG,A XQTFILOAD.
@ADD,PL XQTFILOAD.
```

The procedure file XQTFILOAD is shown in Figure 4.2-1. If a mistake is made in the input cards, it is possible that the output file M18 will be destroyed. As a backup, M18 is copied onto M18X before FILOAD is run.

```
@HDG FILOAD EXECUTION
@ASG,AX FILOAD4.
@DELETE,C M19.,M18X.
@ASG,UP M19.,F/O/TRK/1000/      . FILOAD DATA FILE
@ASG,UP M18X.,F/O/TRK/1000/
@ASG,AX DUMPF9.
@ASG,AX M18.
@COPY M18.,M18X.
@USE 18,M18.
@USE 19,M19.
@USE 9,DUMPF9.
@ASG,AX FILOADCARDS.
@USE 3,FILOADCARDS.
@XQT FILOAD4.
@COPY 19.,18.
@FREE 18.,19.,9.
```

FIGURE 4.2-1 XQTFILOAD JOB CONTROL FILE

It may be necessary to modify the Fortran code for one or more of the SIM-WEST programs from time to time. In this case, the procedure is to edit the source file, recompile the file, and remap the relocatables to obtain absolute file elements. Table 4.2 gives the file names for using this procedure.

TABLE 4.2 SIMWEST MAINTENANCE FILE DIRECTORY

	LIBRARY UPDATE	MODEL GENERATION	ANALYSIS	PRINTER PLOTS
FORTRAN SOURCE FILES - SDF	UTIL FILOAD	CMPLMG CMPLMG2	CMPLAS CMPLAS2	NSMPPT
FORTRAN SOURCE FILES - ELT	FSSI	MGSI	ASSI	ASSI
RELOCATABLE FILES	FSRO	MGRO	ASRO	ASRO
COLLECTION PROCEDURES	MAPFILOAD	MAPEASY	MAPANALYSIS	MAPNSMPPT

The collection procedures are shown in Figures 4.2-2 to 4.2-5. As an example, the jobstream to edit, recompile and remap a subroutine in CMPLMG is given by:

```
@ASG,A CMPLMG.
@ED,U CMPLMG.
          .
          .
          .
    FORTRAN EDITING
          .
          .
          .
@ASG,A MGSI.
@ASG,A MGRO.
@ADD,PL CMPLMG.
@ASG,A MAPEASY.
@ADD,PL MAPEASY.
```

```
@ASG,AX FSRO.
@PREP FSRO.
@ASG,AX MAPFSSI.
@ASG,AX FILOAD4.
@MAP,I MAPFSSI.FILOAD,FILOAD4.
 IN FSRO.FILOAD
 LIB FSRO.
END
```

FIGURE 4.2-2 MAPFILOAD PROCEDURE FILE

```
@ASG,AX MGRO.
@PREP MGRO.
@ASG,AX MAPMGSI.
@ASG,AX MGABS.
@ASG,AX FSRO.
@PREP FSRO.
@MAP,I MAPMGSI.EASY,MGABS.EASY
 IN MGRO.EASY
 LIB FSRO.,MGRO.,FSRO.
END
```

FIGURE 4.2-3 MAPEASY PROCEDURE FILE

```
@ASG,AX FSRO.
@ASG,AX ASRO.
@ASG,AX CORO.
@PREP CORO.
@PREP FSRO.
@PREP ASRO.
@ASG,AX MAPASSI.
@ASG,AX ASABS.
@MAP,I MAPASSI.NONSIM,ASABS.NONSIM
 IN ASRO.NONSIM
 IN ASRO.BLOCKDA
 IN ASRO.MODEL
 LIB  FSRO.,ASRO.,FSRO.,CORO.
 END
```

FIGURE 4.2-4 MAPANALYSIS PROCEDURE FILE

```
@ASG,AX FSRO.
@ASG,AX ASRO.
@PREP FSRO.
@PREP ASRO.
@ASG,AX MAPASSI.
@ASG,AX ASABS.
@MAP,I MAPASSI.NSMPPT,ASABS.NSMPPT
 IN ASRO.NSMPPT
 LIB FSRO.,ASRO.,FSRO.
 END
```

FIGURE 4.2-5 MAPNSMPPT PROCEDURE FILE

THIS PAGE
WAS INTENTIONALLY
LEFT BLANK

5.0 DIAGNOSTICS

Diagnostic messages are printed by both the model generation and the simulation program. In addition, individual library components generally have diagnostic printout associated with them. The diagnostics associated with the model generation program are discussed in Section 2. Section 5 describes the diagnostics associated with the simulation program and the library components.

5.1 WARNING MESSAGES

One or more of the following warning messages will occur if the program encounters difficulty in interpreting analysis instructions or performing an analysis. These messages will be preceded by the flag:

*** WARNING ***

Message symbols xxx, zzz, or nnn are used to indicate phrases from the analysis description that are included as part of the warning message. The following messages are listed in alphabetical order:

1. A VALID PARAMETER NAME MUST PRECEDE THE NUMERIC VALUE nnn

   This message indicates that a valid parameter name was not identified preceding the numeric value nnn. Check for missing delimiters or misspelled parameter name.

2. xxx CAN'T BE SET EQUAL TO zzz. VALUE MUST BE NUMERIC

   Check for missing numeric value or delimiters.

3. CAN'T IDENTIFY xxx AS A VALID PRINT VARIABLE

   Check spelling of xxx or for missing delimiters.

4. CAN'T IDENTIFY xxx VALUE WILL BE IGNORED.

This will result in not setting the quantity intended by xxx to its new value. Check for spelling of xxx or for missing delimiters.

5. CAN'T INTERPRET xxx

The phrase xxx cannot be recognized as a valid program command, program name, or program value. Check spelling of xxx or for missing delimiters.

6. nnn EXCEEDS THE ALLOWABLE INDEX RANGE FOR xxx THIS QUANTITY WILL NOT BE DEFINED

The number nnn was outside the allowable range of states, rates, variables, or parameters. Therefore, the name xxx cannot be assigned as a name for the nnnth state, rate, variable or parameter.

7. NON-ALPHA NAME ON THIS CARD --- xxx. WILL IGNORE THIS CARD.

The table inputs routine expected an alphanumeric table name but encountered a numeric value on the data card printed. Check the sequence and number of tabular data cards to assure that they match those required by the model's tables and table input formats. See Section 3.1.2 for correct formats.

8. NON-NUMERIC DATA ON THIS CARD --- xxx. WILL READ NEXT TABLE

The table input routine expected a numeric value but encountered an alphanumeric name on the data card printed. Check that the sequence and number of tabular data cards matches the model's tables and table input formats. See Section 3.1.2 for correct formats.

9. nnn PRIMARY and xxx SECONDARY INDEPENDENT VARIABLE POINTS EXCEEDS THE zzz WORD STORAGE LIMIT FOR THE FOLLOWING TABLE. SOME DATA WILL BE LOST.

The maximum amount of data allowed for each table is given in the Input Requirements List produced by the Model Generation program. Check that given data falls within this limit or for data card errors.

5.2 DIAGNOSTIC MESSAGES FOR LIBRARY COMPONENTS

A diagnostic message associated to a component is printed when a variable gets out of bounds during analysis. Adjustment of component parameters may be necessary.

In component alphabetical order, these diagnostic messages are:

AD: INPUT POWER xxxx TOO HIGH RELATIVE TO ADMITTANCE xxxx AND RATED VOLTAGE xxx
ADMITTANCE POWER LOSS xxxx EXCEEDS INPUT POWER xxxx

BA: POWER REQUEST xxxx EXCEEDS BATTERY CAPABILITY. CHECK VC, VO, AND RT.

BN: BN INLET AIR MASS FLOW RATE xxxx GREATER THAN MAXIMUM ALLOWABLE xxxx

CO: MAX ITERATIONS FOR COMPRESSOR EFFICIENCY. NP, XNP, RS = xxxx, xxxx, xxxx

CS: CS STORAGE TEMPERATURE xxxx GREATER THAN ALLOWABLE xxxx
CS MASS OF AIR IN STORAGE xxxx BELOW MINIMUM ALLOWABLE xxxx
CS MASS OF AIR IN STORAGE xxxx EXCEEDS MAXIMUM ALLOWABLE xxxx

FL: FLYWHEEL POWER LOSS xxxx EXCEEDS CHARGING POWER xxxx
FLYWHEEL LOSS xxxx EXCEEDS DISCHARGING POWER xxxx
FLYWHEEL CLUTCH LOSS xxxx EXCEEDS MAXIMUM INPUT POWER xxxx
FLYWHEEL CLUTCH LOSS xxxx EXCEEDS DELIVERABLE POWER xxxx

FLYWHEEL KINETIC ENERGY xxxx EXCEEDS CAPACITY xxxx

FLYWHEEL KINETIC ENERGY xxxx FALLS BELOW MINIMUM REQUIREMENT xxxx

GE: GENERATOR OUTPUT EXCEEDS RATED POWER

HS: HS INLET MASS FLOW RATE xxxx OR OUTLET MASS FLOW RATE xxxx IS GREATER THAN MAXIMUM xxxx

HS RESERVOIR VOLUME xxxx EXCEEDED MAXIMUM ALLOWABLE xxxx

HS RESERVOIR VOLUME xxxx DROPPED BELOW MINIMUM xxxx

HT: HT TURBINE CHARACTERISTIC PARAMETER OUT OF RANGE

HT INLET MASS FLOW RATE xxxx GREATER THAN MAXIMUM DESIGN VALUE

HX: HX EXIT TEMPERATURE xxxx GREATER THAN MAXIMUM ALLOWABLE xxxx

IV: IV POWER LOSS xxxx EXCEEDS INPUT POWER xxxx CHECK RATED DC VOLTAGE VDC

MB: WARNING-DIVISOR IN MB EQUALS 0., HAS BEEN SET = 1.

MO: MOTOR INPUT POWER xxxx .GT. RATED INPUT POWER xxxx

MOTOR SLIP xxxx EXCEEDS RATED POWER SLIP xxxx

STATOR RESISTANCE xxxx OR DAMPING xxxx TOO HIGH FOR MOTOR

RE: RE POWER LOSS xxxx EXCEEDS INPUT POWER xxxx

RE, AC INPUT POWER xxxx TOO LARGE IN RELATION TO TRANSFORMER REACTANCE xxxx AND RATED AC VOLTAGE xxxx

TA: FILE DATA OUT OF RANGE. INITIAL VALUE = xxxx ON UNIT xx

TIME POINT PAST TABLE RANGE. LAST VALUE = xxxx ON UNIT xx

READ ERROR OR END OF FILE ON UNIT xx

TR: TRANSMISSION POWER LOSS xxxx EXCEEDS INPUT xxxx

TRANSMISSION POWER LOSS xxxx EXCEEDS MAXIMUM INPUT POWER

TS: TS WORKING FLUID FLOW RATE xxxx GREATER THAN MAXIMUM ALLOWED xxxx

TS INPUT POWER xxxx GREATER THAN MAXIMUM ALLOWED CHARGE RATE xxxx

TS STORAGE TEMPERATURE xxxx OUTSIDE MINIMUM xxxx OR MAXIMUM xxxx

TU: TURBINE BACK PRESSURE xxxx GREATER THAN STORAGE VESSEL PRESSURE xxxx

THIS PAGE
WAS INTENTIONALLY
LEFT BLANK

6.0 CREATION OF NEW LIBRARY COMPONENTS

The addition of new standard components to the SIMWEST library involves two steps. The first is the design of the component. This design must conform to certain design conventions if the new component is to be compatible with existing components. Section 6.1 discusses these design conventions and the addition of the component subroutine to the SIMWEST library. The second step involves the addition of the new component's input and output description to the SIMWEST file M18. File M18 is used by the precompiller to generate subroutine calling sequences for the library components. Section 6.2 discusses the use of the FILOAD program to accomplish this task.

6.1 LIBRARY COMPONENT CODING

6.1.1 Component Call Sequence

The items in the component subroutine call sequence must be arranged in the following order:

1. Tables
2. Output Quantities
3. Input Quantities

Tables or inputs may not be present in the subroutine call sequence. However those items that are present must follow the sequence given above.

Dummy argument names for the call sequence quantities that are used within each subroutine should be chosen to match the physical quantity names placed in the input, output, and table name lists. Exceptions to this policy may be made when integer names (names starting with I through N) must be avoided or when additional letters will clarify the name.

The subroutine name must contain only two characters and must not duplicate the name of an existing standard component.

Tables

The table arrays must be dimensioned within the component subroutine. They must be dimensioned with only one subscript; e.g. DIMENSION TABLE (1). When table data is passed to the component subroutine, the first word in the array contains the name of the table. The second word contains the number of values given for the primary independent variable. The third word contains the number of values given for the secondary independent variable. Both of these numbers are stored as REAL quantities and must be converted to INTEGER before they can be used as a subscript. This can be done by a statement such as:

```
NX = TABLE (2) - number of primary independent variables
NZ = TABLE (3) - number of secondary independent variables
```

If there is a secondary independent variable, the secondary independent variable array will begin with the fourth word in the array. Thus if this array is designated as z(1), z(2),...., then:

```
z(1) = TABLE (4)
z(2) = TABLE (5)
z(3) = TABLE (6)
  .      .
  .      .
  .      .
```

The primary independent variable array begins with word NZ + 4. Thus if this array is designated as X (1), X(2), ... , then:

```
X(1) = TABLE (NZ + 4)
X(2) = TABLE (NZ + 5)
.        .
.        .
.        .
```

The dependent variable array begins with word NX + 4 if there is no secondary independent variable. Thus if this array is designated as Y(1), Y(2),..., then:

```
Y(1) = TABLE (NX + 4)
Y(2) = TABLE (NX + 5)
.        .
.        .
.        .
```

If there is a secondary independent variable array and this array was designated Y (I,J), with $1 \leq I \leq NX$ and $1 \leq J \leq NZ$, then Y(I,J) would be related to the table array as:

```
Y(I,J) = TABLE(NX+NZ+3+I+(J-1)*NX)
```

Normally the individual elements in the table are not used directly but are passed to a table look-up routine. In this case the starting address of the X, Y, and Z tables would be referred to as:

```
Z(1) = TABLE (4)          secondary independent variable table
X(1) = TABLE (NZ+4)       primary independent variable table
Y(1,1) = TABLE (NX+NZ+4)  dependent variable table
```

If more than one table is used by a component subroutine, the table names must appear in the same sequence in the table name list stored in M18 file as in the subroutine call sequence.

Example 6.1: Given a component, HA, that requires the tables TPH and TPC as an inputs. The call sequence of this subroutine would appear as:

```
SUBROUTINE HA(TPH,TPC,...
```

Output Quantities

The term "output quantity" refers to information that is calculated and then "output" by a particular component subroutine. This is not to be confused with the "outlet quantities" of the component. The outlet quantities are associated with a particular component port as a result of assigning a positive direction of power or information flow through the component. Some outlet quantities may be calculated by the component subroutine and thus become output quantities of that component. While other outlet quantities may be furnished to the component subroutine and thus become input quantities to that subroutine.

The output quantities should be grouped together by port. That is, all outlet, (port two quantities), then all inlet, (port one quantities), etc. If a component has multiple outlet ports, the output quantities associated with each outlet port should be grouped together and listed before any inlet port output quantities.

Certain output quantities may be internal to the component and not associated with any port. In other cases the same output quantity may be associated with several ports. In such cases, no port designation is assigned to the output quantity. Such quantities are referred to as "universal port" quantities. As such, they are allowed to connect to any other similar physical quantity regardless of the input quantities port number. This is not the case for quantities with specified port numbers. Once a connection has been made between an input and output quantity with given port numbers, only connections of matching physical quantities with those port numbers occur. Manual override of this provision can be made by specifying particular physical quantity connections.

Three quantities are required for each state variable output. The first is the state variable, the second is the state variable derivative, (rate),

and the third is an integer quantity, the integrator control variable.

Example: Given a component, HA, with the following outputs:

Physical Quantity	Port No.	
T	3	Outlet Ports
T	4	
P	1 (State Variable)	Inlet Ports
P	2 (State Variable)	

The call sequence arguments for these outputs would be:

```
SUBROUTINE HA(TPH,TPC,T3,T4,P1,P1DOT,IP1,P2,P2DOT,IP2,...
```

<u>Input Quantities</u>

The term "input quantity" refers to information that is provided to a particular component subroutine. This is not be be confused with the "inlet quantities" of the component. The inlet quantities are associated with a particular component port as a result of assigning a positive direction of power or information, through the component. Some inlet quantities may be calculated by the component subroutine and thus become output quantities of that component, while other inlet quantities may be furnished to the component subroutine and thus become input quantities to that subroutine.

The input quantities should be grouped together by port. That is, all inlet, (port one quantities), then all outlet, (port two quantities), etc. Port designations for two port components which have the same physical quantity on both inlet and outlet will be: port 1 for upstream or inlet port and port 2 for downstream or outlet port. It is important that the inlet port quantities be listed before any outlet port quantities. If a component has multiple inlet ports, the input quantities associated with each inlet port should be grouped together and listed before any outlet port quantities.

Certain input quantities may be internal to the component and not associated with any port. In other cases the same input quantity may be associated with several ports. In such cases, no port designation is assigned to the input quantity. Such quantities are referred to as "universal port" quantities. As such, they are allowed to connect to any other similar physical quantity regardless of the output quantities port number. This is not the case for quantities with specified port numbers. Once a connection has been made between an input and output quantity with given port numbers, only connections of matching physical quantities with those port numbers occur. Manual override of this provision can be made by specifying particular physical quantity connections.

Example: Given the component HA described in the above example, with the following inputs:

Physical Quantity	Port No.	
T	1	Inlet Ports
T	2	
P	3	Outlet Ports
P	4	
AKH	(universal port quantity)	

The call sequence for these inputs would follow the output arguments, giving the complete call sequence:

```
SUBROUTINE HA(TPH,TPC,T3,T4,P1,P1DOT,IP1,P2,P2DOT,IP2,T1,T2,P3,P4,AKH)
```

The call sequence for standard component subroutines should follow the order shown in Table 6.1-1.

6.1.2 Additions and Modifications to Component Library

Section 4.2 describes the job control procedures to add a new component to the component library, compile the source code that describes the new component and add the relocatable binaries to the component library CORO.

TABLE 6.1-1

COMPONENT SUBROUTINE
CALL SEQUENCE ORDER

1. Tables

2. Output Quantities
   - 2.1 All Outlet Port Quantities*
   - 2.2 All Inlet Port Quantities* (feedback variables)
   - 2.3 All Other Output Quantities

3. Input Quantities
   - 3.1 All Inlet Port Quantities*
   - 3.2 All Outlet Port Quantities* (feedback variables)
   - 3.3 All Other Input Quantities

* Group quantities with the same port number together. If multiple inlet or outlet ports exist, arrange port quantities in order of increasing port numbers.

6.1.3 Coding Conventions

There are several coding rules which apply to any component coded. First of all, the calling sequence must be ordered so that it agrees with that constructed from the Fiload program. Hence the calling sequence begins with table arrays, is followed by output variables, and then by input parameters. State variables require three sequential parameters in the calling sequence: the state variable, the state derivative, and an integer valued integration control. With the exception of the latter, all parameters in the calling sequence are real valued. In general one cannot use any local variables or arrays to store information from call to call since there may be several components in the model which call a given subroutine. In other words, local variables can only be used for scratch calculations, unless the computed information is based on COMMON block inputs.

Most of the coding conventions and techniques used are illustrated in Figures 6.1-1 and 6.1-2. Figure 6.1-1 shows the code for the simple power curve component WP. Following the call sequence are a number of comment cards including the component purpose and calling sequence. The table PW is treated as a single dimension Fortran array. Power output is obtained from the table interpolation subroutine TBLU1. (Use of the table interpolation routines TBLU1 and TBLU2 is explained in Section 2.1). The rest of the code shows the conventions used to compute output statistics and add costs for the cost summary. IMPL is an integer variable which indicates the iteration control status:

IMPL = 0 the first time in a simulation that the model (EQMO) is called

= 1 if more iterations and hence subroutine calls are expected at a given time step

>1 the final iteration through the model.

Hence when IMPL = 0, subroutine variables are initialized, default values are assigned, etc. The statistics are only updated at the final iteration

```
00100      1*      CWP
00101      2*            SUBROUTINE WP ( PW,BI,PO,AMI,AMP,SP,CO,VO,WV0,WV1,WV,CCI,CMI,EC)
00101      3*      C
00101      4*      C   PURPOSE    MODEL THE WIND TURBINE AND GENERATOR USING A POWER CURVE
00101      5*      C
00101      6*      C   WRITTEN BY A.W. WARREN                          VERSION 1, MARCH 3 1977
00101      7*      C
00101      8*      C   CALL SEQUENCE
00101      9*      C         TABLES
00101     10*      C              PW   - WIND GENERATION POWER IN KW VERSUS WIND VELOCITY IN MPH
00101     11*      C
00101     12*      C         OUTPUTS
00101     13*      C              BI   - OUTPUT BUS CURRENT, AMPS
00101     14*      C              PO   - POWER OUTPUT, KW
00101     15*      C              AMI  - MAX. OBSERVED CURRENT, AMPS
00101     16*      C              AMP  - MAX. OBSERVED POWER, KW
00101     17*      C              SP   - TOTAL OUTPUT ENERGY,KWH
00101     18*      C              CO   - OPERATING COST, $
00101     19*      C
00101     20*      C         INPUTS
00101     21*      C              VO   - RATED BUS VOLTAGE, VOLTS
00101     22*      C              WV0  - POWER CUTIN VELOCITY, MPH
00101     23*      C              WV1  - POWER CUTOUT VELOCITY, MPH
00101     24*      C              WV   - WIND VELOCITY, MPH
00101     25*      C              CCI  - CAPITOL COST / YEAR, $
00101     26*      C              CMI  - MAINTENANCE COST / YEAR, $
00101     27*      C              EC   - CONTROL ENERGY RATE, $/HR
00101     28*      C
00103     29*            DIMENSION PW(1)
00104     30*            COMMON / CIMPL / IMPL
00105     31*            COMMON/COST/ CC,CM,COP /CTIME/ TIME /CSIMUL/ DUM(6),TINC,TMAX
00105     32*      C
00105     33*      C                         POWER OUTPUT CALCULATIONS
00105     34*      C
00106     35*            PO = 0.
00107     36*            IF(WV.LT.WV0 .OR. WV.GT.WV1) GO TO 10
00111     37*            N = PW(2)
00112     38*            PO = TBLU1(WV,PW(4),PW(4+N),1,-N)
00113     39*         10 BI = PO*1000/VO
00113     40*      C                         STATISTICS
00113     41*      C
00114     42*            IF(IMPL.GT.0) GO TO 20
00116     43*            CO= 0.
00117     44*            AMI = 0.
00120     45*            AMP = 0.
00121     46*            SP = 0.
00122     47*            TMAX1=TMAX*.99999
00123     48*         20 IF(IMPL.LE.1) RETURN
00125     49*            AMI = AMAX1(AMI,BI)
00126     50*            AMP = AMAX1(AMP,PO)
00127     51*            SP = SP + PO*.5*TINC
00130     52*            CO= CO + EC*.5*TINC
00130     53*      C                         COST SUMMATION
00131     54*            IF( TIME.LT.TMAX1) RETURN
00133     55*            CC = CC + CCI
00134     56*            CM = CM + CMI
00135     57*            COP= COP +.CO
  136     58*            RETURN
  137     59*            END
  ) FOR
```

FIGURE 6.1-1 SAMPLE COMPONENT CODE

```
00100      1*      CGE                                                                                  000000
00101      2*            SUBROUTINE GE(P2,EE,RS,PL,EF2,PM2,PMN,SP,P1,RAP,RSY,RAS,DA,SR,VO,              000000
00101      3*          1 EF1,PM1,CCI,CMI)                                                               000000
00101      4*      C                                                                                    000000
00101      5*      C   PURPOSE     MODEL AC INDUCTION GENERATOR                                         000000
00101      6*      C                                                                                    000000
00101      7*      C   METHOD      MECHANICAL AND ELECTRICAL EFFICIENCIES ARE USED TO COMPUTE           000000
00101      8*      C               OUTPUT POWER.  ROTOR SPEED IS COMPUTED ASSUMING POWER IS             000000
00101      9*      C               PROPORTIONAL TO SLIP.                                                000000
00101     10*      C                                                                                    000000
00101     11*      C   WRITTEN BY A.A. WARREN                          VERSION 1, MARCH 16 1977         000000
00101     12*      C                                                                                    000000
00101     13*      C   CALL SEQUENCE                                                                    000000
00101     14*      C          OUTPUTS                                                                   000000
00101     15*      C               P2  - OUTPUT POWER, KW                                               000000
00101     16*      C               EE  - ELECTRICAL EFFICIENCY                                          000000
00101     17*      C               RS  - ROTOR SPEED, RPM                                               000000
00101     18*      C               PL  - POWER LOSS, KW                                                 000000
00101     19*      C               EF2 - OUTPUT PRODUCT EFFICIENCY                                      000000
00101     20*      C               PM2 - MAXIMUM OUTPUT POWER, KW                                       000000
00101     21*      C               PMN - MAX. OBSERVED OUTPUT POWER / RATED POWER                       000000
00101     22*      C               SP  - TOTAL OUTPUT ENERGY, KWH                                       000000
00101     23*      C                                                                                    000000
00101     24*      C          INPUTS                                                                    000000
00101     25*      C               P1  - INPUT POWER, KW                                                000000
00101     26*      C               RAP - RATED OUTPUT POWER, KW                                         000000
00101     27*      C               RSY - SYNCHRONOUS ROTOR SPEED, RPMN                                  000000
00101     28*      C               RAS - RATED POWER SLIP (DEFAULT = .05)                               000000
00101     29*      C               DA  - MECHANICAL DAMPING, JOULE-SEC                                  000000
00101     30*      C               SR  - STATOR RESISTANCE, OHMS                                        000000
00101     31*      C               VO  - RATED BUS VOLTAGE, VOLTS                                       000000
00101     32*      C               EF1 - INPUT PRODUCT EFFICIENCY                                       000000
00101     33*      C               PM1 - MAXIMUM INPUT POWER, KW                                        000000
00101     34*      C               CCI - CAPITAL COST/YEAR, $                                           000000
00101     35*      C               CMI - MAINTENANCE COST/YEAR, $                                       000000
00101     36*      C                                                                                    000000
00103     37*            COMMON /CIMPL/ IMPL,ICNT /CTIME/ TIME                                          000000
00104     38*            COMMON /COST/ CC,CM,CO,CV /CSIMUL/ DUM(6),TINC,TMAX                            000000
00104     39*      C                         INITIALIZATION                                             000000
00104     40*      C                                                                                    000000
00105     41*            IF( IMPL.GT.0) GO TO 10                                                        000000
00107     42*            EFF = 1.                                                                       000002
00110     43*            TMAX1 = TMAX* .99999                                                           000004
00111     44*            IF(RSY.EQ. .99999) RSY = 1800.                                                 000007
00113     45*            IF(RAS.EQ. .99999) RAS = .05                                                   000014
00115     46*            IF(DA .EQ. .99999) DA = 0.                                                     000021
00117     47*            IF(SR .EQ. .99999) SR = 6.4/RAP                                                000025
00121     48*            IF(VO .EQ. .99999) VO = 400.                                                   000033
00123     49*            IF(PM1.EQ. .99999) PM1 = 1.E10                                                 000040
00125     50*            PMN =0.0                                                                       000045
00126     51*            SP  =0.0                                                                       000046
00127     52*            RATI = RAP*1000./VO                                                            000047
00130     53*            EE  = RAP/(RAP + SR*.001*RATI**2)                                              000053
00130     54*      C                         COMPUTE ROTOR SPEED AND OUTPUT POWER                       000053
00130     55*      C                                                                                    000053
00130     56*      C                                                                                    000053
00131     57*         10 IF( P1.GT. 0.) GO TO 20                                                        000064
00133     58*            P2 =0.0                                                                        000066
00134     59*            PL =0.0                                                                        000067
00135     60*            RS = RSY                                                                       000070
00136     61*            GO TO 30                                                                       000072
00136     62*      C                                                                                    000072
00137     63*         20 A = RAP/(EE*RAS)                                                               000074
00140     64*            B = RSY/( A + RSY**2*DA*1.0966E-5)                                             000100
00141     65*            RS = B*(A + P1)                                                                000110
00142     66*            P2 = RAP*(RS/RSY -1.)/RAS                                                      000114
00143     67*            IF (P2.GT.RAP .AND.IMPL.EQ.2) WRITE(6,100)                                     000121
00146     68*        100 FORMAT(1H0, 40X,37HGENERATOR OUTPUT EXCEEDS RATED POWER /)                     000143
00146     69*      C                                                                                    000143
00147     70*            IF(P2.GT.RAP .AND. IMPL.EQ.2)ICNT=ICNT+1                                       000143
00151     71*            PL = P1 - P2                                                                   000163
00152     72*            EFF = P2/P1                                                                    000166
00153     73*         30 EF2 = EF1*EFF                                                                  000172
00154     74*            PM2 = AMIN1(RAP, PM1*EFF)                                                      000174
00154     75*      C                                                                                    000174
00154     76*      C                         STATISTICS                                                 000174
00155     77*            IF(IMPL.LE.1) RETURN                                                           000203
00157     78*            PMN = AMAX1(PMN, P2/RAP)                                                       000212
00160     79*            SP = SP + P2*.5*TINC                                                           000221
00160     80*      C                                                                                    000221
00160     81*      C                         COST SUMMATION                                             000221
00161     82*            IF( TIME.LT.TMAX1) RETURN                                                      000226
00163     83*            CC = CC + CCI                                                                  000235
00164     84*            CM = CM + CMI                                                                  000240
00164     85*      C                                                                                    000240
00165     86*            RETURN                                                                         000243
00166     87*            END                                                                            000362
END FOR
```

FIGURE 6.1-2 SAMPLE COMPONENT CODE

when the model has presumably attained steady state values. Finally, the costs are added up when the simulation has reached the maximum time point. Capital costs, maintenance costs, and operating costs are stored in the first three locations of common block COST.

Figure 6.1-2 shows the code for the generator component GE. The program automatically assigns default parameters = .99999. Hence, when IMPL = 0 component dependent default values are assigned whenever the .99999 default is assumed. The code near Format statement 100 shows a typical diagnostic printout. The diagnostic is only printed if IMPL = 2 since we need only diagnose errors at the final iteration. Note that a counter ICNT is updated each time a diagnostic is printed. It is stored in the second location of common block CIMPL and is monitored to see if diagnostic print lines exceeds DLINES. If so, IMPL is set to 3 the final iteration, so that no further diagnostics are printed. The last convention observed here concerns the use of the maximum power and product efficiency variables denoted PM1, EF1, PM2, EF2. These variables are used to communicate information to the logic components PD and PA. The efficiency variable EFF is defined as the ratio of output power to input power except when P1 = 0. In this case the old EFF value is used, but in any case EFF = 0 must be avoided since this would communicate a zero efficiency to a logic device which would then generate an infinite request. It is seen that EF2 and PM2 represent the joint efficiency and maximum power at the output port as a consequence of the rated generator power and computed input/output efficiency.

Storage devices have in addition to the above, certain conventions to communicate with the logic components. An input parameter RE1 for port 1 request is used to initiate power discharge from storage. An output variable RE2 for port 2 request is used to communicate a maximum charge rate request and is usually computed by

$$RE2 = MIN\ (MP1,\ RAP)/EF1$$

where MP1 and EF1 are the input maximum power and input product efficiency,

and RAP denotes the maximum storage charging rate. A priority interrupt INT should also be defined so that INT = 1. when storage is empty or at a minimum, INT = 0. if no interrupt is required, and INT = -1. at full storage capacity. The state of storage is normally a state variable so that the code computes the state derivative at each time point and lets the integrator update the state at each time point.

6.2 FILOAD PROGRAM

In addition to placing the subroutine representing the new standard component in the component library, descriptions of the inputs, outputs, and tables required by the new component must be added to the permanent file, M18. These lists are used by the Model Generation program to direct the connection of component inputs and outputs. The program FILOAD is provided to perform any of the following tasks:

1. Add new input, output, or table name lists.
2. Replace existing input, output or table name lists.
3. Remove all name lists for specified components.
4. Dump contents of M18 file onto Tape 9 in input format.

6.2.1 FILOAD Program Commands

The FILOAD program will recognize the following commands.

LIST STANDARD COMPONENTS

The LIST COMPONENTS command causes the program to print the input, output, and table lists for all components modified or added to the M18 file. If this command is not given the program will merely give a message stating the name of the new components being added to the file.

PURGE

The PURGE command can be used to remove a component from the M18 file. The PURGE command is followed by the names of the components to be purged. The command and the component names must be separated by one of the standard delimiters; i.e. [ ] three or more blanks, [,] comma, [=] equal sign, [( )] left or right parentheses.

Example 6.3: PURGE = CM, TB, OB

This command would remove all lists for the CM, TB, and OB components from the name list file.

SYMBOL

The SYMBOL command may be used to designate the type of symbol that is to appear for each standard component in the lineprinter drawn model schematic diagram. The SYMBOL command is followed by the names of the components each followed by a symbol number. The symbol numbers and their associated symbols are shown in Figure 6.2-1. The SYMBOL command, component names, and symbol numbers are separated by standard delimiters.

Example: SYMBOL, CO = 100, SH = 200, TU = 300, OC = 400

If a symbol number is not specified for a component the default symbol of a square box will be used.

DUMP FILE

The DUMP FILE command causes the FILOAD program to dump the contents of the M18 file onto DUMPF9, in the input format of the FILOAD program. Thus for each standard component, a list of inputs, outputs, and tables will be produced. This data will be preceded by the command NEW FILE described below. This file may be edited to modify the input, output or tables description of any existing standard component or to derive a new standard component

STANDARD SCHEMATIC SYMBOLS

```
4          5          6          7          8

           **
           *  *
           *    *                 00000000
           *      *              0        0
           *  CO    *            0  OC    0
14         *   15   *     16     0   17   0     18
           *      *              0        0
           *    *                 00000000
           *  *
           **  SYMBOL = 100                 SYMBOL = 400

24         25         26         27         28

           ******                *********
          *      *               *       *
         *  SH    *              *  ME   *
34       *   35   *     36       *   37  *     38
          *      *               *       *
           ******                *********
                SYMBOL = 200      SYMBOL = ANY OTHER NUMBER

44         45         46         47         48

                 **
              *  *
            *    *
          *      *
        *  TU    *
54      *   55   *     56         57         58
          *      *
            *    *
              *  *
                 **      SYMBOL = 300

64         65         66         67         68
```

FIGURE 6.2-1 LIST OF STANDARD COMPONENT SYMBOLS

description from an existing one. The results of such an editing would then serve as input data to a subsequent run of the FILOAD program. Unless it is intended to purge the M18 file and start anew, the NEW FILE command at the beginning of DUMPF9 should be removed before the subsequent run of the FILOAD program.

NEW FILE

The NEW FILE command instructs the FILOAD program to construct a new M18 file. This command must occur as the first card in a set of data describing a completely new M18 file. Any previous components that may have existed on the M18 file are purged by this command. It is therefore only used when installing a complete new M18 file.

FILE NAME

This command is used to load the file name to be associated with the M18 file. The current M18 file name is WINDENERGY. This command is used as:

FILE NAME = WINDENERGY

6.2.2 Input Name Lists

Input name lists are identified by the letters INPT following the component name. Thus, the input name list for a component DC would be introduced with the phrase, DCINPT. This must be followed by a phrase that contains the number of names in the input name list.

The input names are contained on the following data cards, 8 names per card. The names must be left adjusted in fields, 10 characters wide. The names are placed in Columns 1 through 3 of each field. Column 9 of each field can be used to indicate a port number which can be attached to the name to distinguish it from other quantities of the same name that occur with the given

component. Thus, to indicate that temperature, T, is an input to port 1, the input name list would be:

```
Column:   1  2  3  4  5  6  7  8  9  10
Item:     T                       1
```

This quantity would then be referred to as T1.

Example 6.4:

```
SWINPT = 3
IN......1.IN......2.CNT
```

(The dots are used here to indicate blank spaces and would not be included in an actual data card).

These two data cards would indicate that the component SW had 3 input quantity names. A quantity IN appears at port 1, and is to be referred to as IN1. A quantity IN appears at port 2, and is to be referred to as IN2. A third input quantity CNT has no port designation. Note that if a port number is to be attached to a quantity name, that name should contain no more than 2 characters.

The sequence of names in the input name list must match the sequence of input arguments in the component call sequence.

6.2.3 Output Name Lists

Output name lists are identified by the letters OUTP following the component name. Thus, the output name list for a component DC would be introduced with the phrase, DCOUTP. This must be followed by a phrase that contains the number of names in the output name list.

The output names are contained on the following data cards, 8 names per card. The names must be left adjusted in fields 10 characters wide. The names are placed in Columns 1 through 3 of each field. Column 9 of each field can be used to introduce a port number which can be attached to the name to distinguish it from other quantities of the same name that occur with the given component. If the output quantity is a state variable, this must be indicated by placing S in Column 10 of the field. Thus, if power P is a state variable output quantity at port 2, the output name list would be:

```
Column:  1  2  3  4  5  6  7  8  9  10
Item:    P                       2   S
```

This quantity would then be referred to as P2.

Example 6.5:

```
TZOUTP = 3
X.......1SX.......2SOUT
```

(The dots are used here to indicate blank spaces, and would not be included on an actual data card).

These two data cards would indicate that the component TZ had 3 output quantity names. A quantity X appears at port 1. This is a state variable, and will be referred to as X1. A quantity X is also a state variable that appears at port 2. It will be referred to as X2. The quantity OUT is an output variable, not a state variable, and does not have a port number associated with it. Note, that if a port number is to be attached to a quantity name that name should contain no more than 2 characters. These two characters plus the port number will reach the maximum number of 3 characters in a quantity name.

The sequence of names in the output name list must match the sequence of output arguments in the component call sequence. However, whereas three argu-

ments are provided for each state in the subroutine call sequence, only one name is included in the output name list.

6.2.4 Table Name Lists

Table name lists are identified by the letters TABS, following the component name. Thus, the table name list for a component CM would be introduced with the phrase CMTABS. This must be followed by a phrase containing the number of names in the table name list. The table names are contained in the following cards, one table name per card. The name is located in the first 3 columns of the card. It must be accompanied by the maximum dimension that is to be provided for this table. This number must be given in columns 4 through 10 and should have a decimal point given. For single independent variable tables this number must be negative. For tables with two independent variables, this number must be positive.

Example:

```
CMTABS = 3
TAM      53.
TAB      43.
TCM     -27.
```

These four data cards would indicate that the component CM had 3 tables. The first two tables TAM and TAB have two independent variables each, as indicated by the positive dimension numbers. The table TCM has only one independent variable, as indicated by the negative dimension number. 53, 43, and 27 words of storage are to be provided for tables TAM, TAB, and TCM respectively. The maximum storage is related to the maximum number of primary, NX, and secondary, NZ, independent variables by:

MAX = 3 + NX+NZ+NX*NZ for tables with two independent variables

MAX = 3 + 2*NX for tables with one independent variable

7.0 LIBRARY COMPONENT DESCRIPTIONS

This section describes the mathematical algorithms and input/output structure of the SIMWEST library components. Each component writeup contains a brief textual description of the algorithms, a mathematical expression summarizing its function, a list of input and output variables, and a description of the calculation sequence and logic used in the model. A figure is provided which shows the nominal input and output connections, and the state variables of each component.

There are a number of features and conventions in the component descriptions which require some elaboration. These are briefly summarized below.

7a. INPUT/OUTPUT NAME LISTS

A potentially confusing factor is the way port numbers on input parameters and output variables are designated. On the model generation input cards the name of the physical quantity and the port number is separated by a comma. For example, the power variable with port designation 1 is denoted P,1. In defining input to the simulation program, this same variable would be denoted P1. To emphasize the distinction between the physical quantities and port numbers, they are listed separately in the name lists of the component write-ups. For example, P 1 in the name list denotes the power variable (or parameter) with port designation 1 even though in other parts of the text it may simply be denoted P1.

Another convention in the name lists is that the alphabetic symbol 'O' is shown as Ø to distinguish this symbol from a zero. Elsewhere in the text symbols such as VØ may be referred to as VO.

7b. INPUT PARAMETER SPECIFICATION

All input parameters are associated with default values. Many of the parameters have default values denoted in the parameter description by the letter D. For example in the Battery component the default value for terminal resistance, RT, is D = .001 ohms. All input parameters for which a default value is not so specified has a default value of .99999. Default values are intended to enable users to put models together quickly by specifying a minimum of input data. Users need only specify detailed parameter values for those components of current interest. One must be careful using this approach since the operating characteristics and efficiency of a 10kw rated device may for example be quite different than for a 100kw device.

Any user specified input parameter can be driven by one or two dimension table lookups using the FU and FV components. This enables the user to build more detailed models using time or other output variables to drive the tables. For example, if one needs to specify cost of peak load generation to the utility component as a function of peak load request, then one adds FU as an input to UT and specifies load request as an input connection to FU. The desired function table is then input to FU.

It may be noted that not all of the components have maintenance or operating cost inputs. Thus, whenever these costs are important, one can aggregate such costs and input lumped costs to the model. For example, the maintenance cost of the hydro storage system may include maintenance costs for the pump and turbine.

7c. COMPONENT LOGIC

In constructing SIMWEST components, we have adopted several conventions to aid communication with the logic components. All physical components distributing power are given two input parameters EF and MP (port 1) and two output

variables EF and MP (port 2). The output EF is the product efficiency of all components in the distribution subsystem up to and including the given component, and MP is the maximum power deliverable at the output of the component. Each storage component has in addition a power request input denoted RE (port 1), a power request output denoted RE (port 2), and a priority interrupt flag denoted INT.

Figure 7.0 shows the logic and physical variable connections for power flow in and out of a hydro reservoir. Power flows from the power divider to the pump at a rate not to exceed the request RE from HS. The HS request is computed by dividing the input maximum power by the input (or pump) efficiency EF. Hence, the maximum power flowing to HS cannot exceed RE*EF = MP. Similarly, the input request to HS is computed by the PA component so as not to exceed the maximum input power MP divided by EF (turbine efficiency). Hence, the power that flows to PA cannot exceed RE*EF = input maximum power.

When the hydro reservoir is empty, the interrupt flag is turned on and the priority sequence is changed to 1 so that the reservoir is given access to power flowing into the divider.

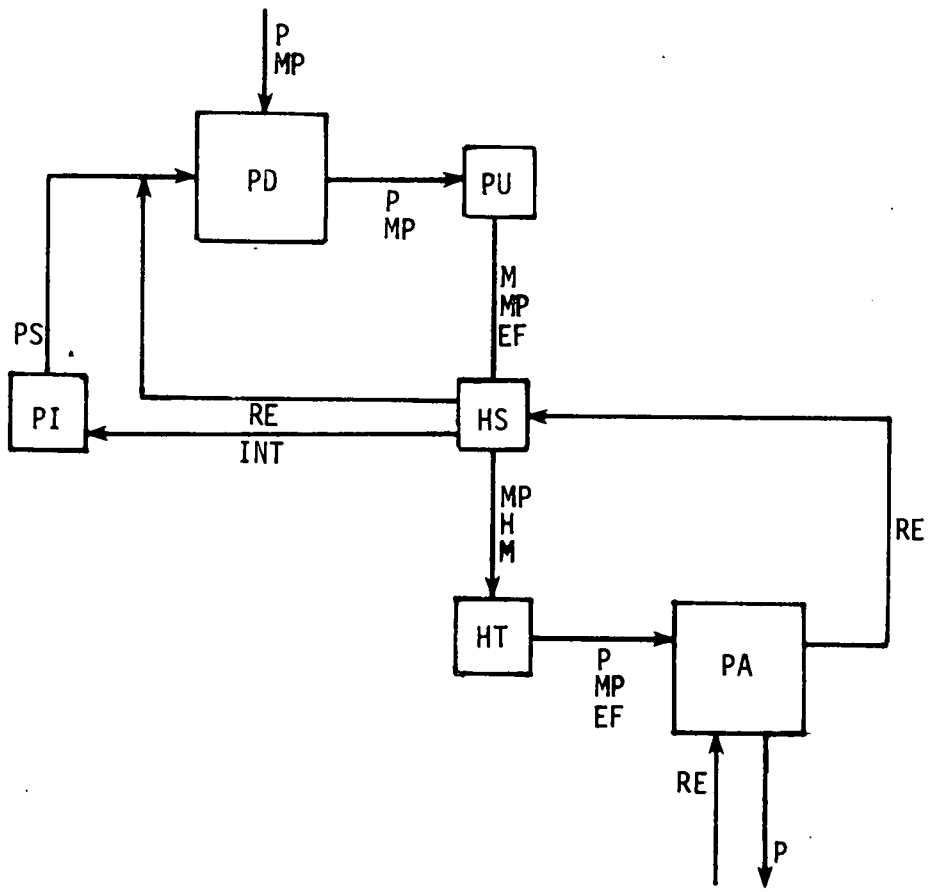

FIGURE 7.0 SAMPLE CONNECTIONS FOR LOGIC COMPONENTS

7.1 ADMITTANCE

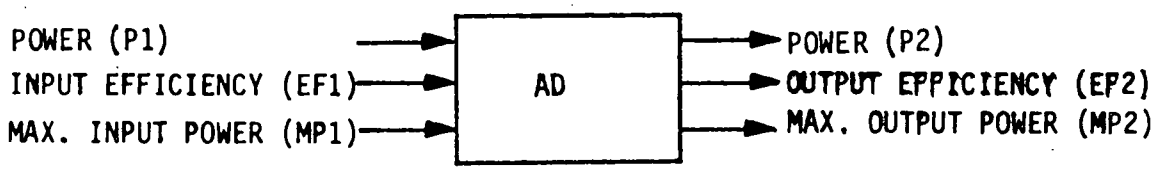

The admittance model can be used to model transmission lines, transformers, capacitors or impedance power flows. A primary assumption is that the reactive parameters dominate the real parameters so that power transfer angle is solely based on reactive values, and power losses are based on the real admittance parameters and on power angle. The equation for power loss is based upon the following model:

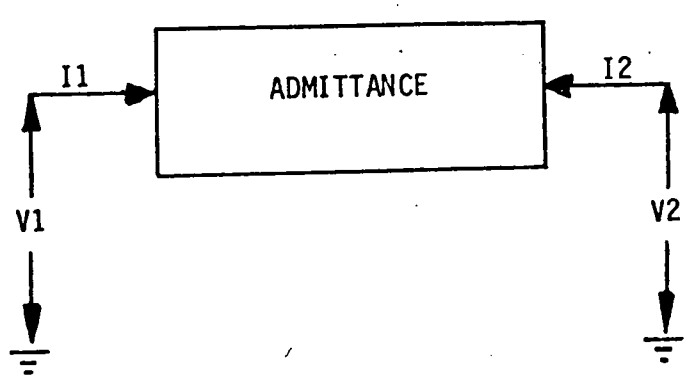

FIGURE 7.1 ADMITTANCE NETWORK MODEL

$$\begin{pmatrix} I1 \\ I2 \end{pmatrix} = \begin{pmatrix} G1 + jB1 & GM + jBM \\ GM + jBM & G2 + jB2 \end{pmatrix} \begin{pmatrix} V1 \\ V2 \end{pmatrix}$$

Where the reactive parameters B_1 and B_2 do not enter into the power loss calculations.

Inputs

Parameter/Port		Description	Units
G1,GM,G2		Real admittance parameters *	mho
BM		Reactive admittance parameter *(≠0)	mho
VØ		Rated voltage magnitude	volts
P	1	Input power	kw
EF	1	Input product efficiency	-
MP	1	Maximum input power	kw
CC		Capital cost/year	$

Outputs

Variable/Port			
P	2	Output power	kw
PL		Power loss	kw
PA		Power angle	deg
EF	2	Output product efficiency	-
MP	2	Maximum output power	kw

* - See next page for User Input to Model Transmission lines, Transformers and Impedances.

AD

Transmission Line Input:

$G1 = G2 = g*\ell$

$GM = -g*\ell$

$BM = 1/(\omega*L*\ell)$

where g = line conductance per unit length

ℓ = length of line

ω = frequency in radians/sec = 120π

L = line inductance per unit length

Transformer Input:

$G1 = G2 = GM = 0$

$BM = 1/X*h$

where X = reactance in ohms

h = turns ratio

(No power loss modeled with a transformer)

Impedance Input: (Includes capacitors and inductors)

$G1 = G2 = -GM = R/(R^2+X^2)$

$BM = X/(R^2+X^2)$

where R = resistance in ohms

X = reactance in ohms

$$= \begin{pmatrix} \omega L & \text{for an inductance } L \\ -\frac{1}{\omega C} & \text{for a capacitance } C \end{pmatrix}$$

Calculation Sequence

If $P1 \leq 0$ P2 = PL = PA = 0 and Return

1) Compute power angle

If $P1*1000 > BM*V\emptyset^2$, $\cos\theta = 0$ and write DIAGNOSTIC

$\theta = -SIN^{-1}(P1*1000/BM*V\emptyset^2)$

$PA = \theta*180/\pi$

$\cos\theta = \sqrt{1 - (P1*1000/BM*V\emptyset^2)^2}$

2) Compute power loss and output power

$PL = V\emptyset^2*(G1+G2+2*GM*\cos\theta)/1000$

P2 = P1 - PL

EFF = P2/P1

If $P2 > 0$ go to 3)

write DIAGNOSTIC

EFF = 1.

3) Efficiency and maximum output power

EF2 = EF1*EFF

$MP2 = MIN(MP1, |BM| *V\emptyset^2/1000) * EFF$

4) Compute costs

```
SUBROUTINE AD          ENTRY POINT 000212

STORAGE USED  CODE(1) 000264; DATA(0) 000072; BLANK COMMON(2) 000000

 COMMON BLOCKS

 0003   CIMPL   000002
 0004   CTIME   000001
 0005   CSIMUL  000010
 0006   COST    000001

EXTERNAL REFERENCES (BLOCK, NAME)

 0007   NWDU$
 0010   NIO2$
 0011   ASIN
 0012   SQRT
 0013   NERR3$

STORAGE ASSIGNMENT  (BLOCK, TYPE, RELATIVE LOCATION, NAME)

 0001   000017 10L       0001   000060 100L      0000   000006 108F      0001   000076 200L      0001   000140 300L
 0000   000027 308F      0001   000162 400L      0006 R 000000 CCI       0005   000000 DUM       0000 R 000005 EFF
 0003 I 000001 ICNT      0003 I 000000 IMPL      0000   000054 INJP$     0000 R 000001 RR        0000 R 000003 RRC
 0000 R 000002 RR2       0000 R 000004 THETA     0004 R 000000 TIME      0005 R 000007 TMAX      0000 R 000000 TMAX1
```

```
00100      1*      CAD                                                                    000000
00101      2*            SUBROUTINE AD(P2,PL,PA,EF2,MP2,  G1,GM,G2,BM,VO,P1,EF1,MP1,CC)   000000
00101      3*      C                                                                      000000
00101      4*      C              PURPOSE    MODEL OF TRANSMISSION LINES,TRANSFORMERS,    000000
00101      5*      C                         CAPACITORS, OR IMPEDANCE POWER LOSS          000000
00101      6*      C                                                                      000000
00101      7*      C              METHOD     OUTPUT POWER AND POWER LOSS COMPUTED FROM    000000
00101      8*      C                         INPUT POWER                                  000000
00101      9*      C                                                                      000000
00101     10*      C              WRITTEN BY Y.K.CHAN      VERSION 1, JULY,1977           000000
00101     11*      C                                                                      000000
00101     12*      C  CALL SEQUENCE                                                       000000
00101     13*      C         OUTPUTS                                                      000000
00101     14*      C              P2  -OUTPUT POWER,KW                                    000000
00101     15*      C              PL  -POWER LOSS,KW                                      000000
00101     16*      C              PA  -POWER ANGLE,DEG                                    000000
00101     17*      C              EF2 -OUTPUT PRODUCT EFFICIENCY                          000000
00101     18*      C              MP2 -MAXIMUM OUTPUT POWER,KW                            000000
00101     19*      C         INPUTS                                                       000000
00101     20*      C              G1,GM,G2  -REAL ADMITTANCE PARAMETERS,MHO               000000
00101     21*      C              BM  -REACTIVE ADMITTANCE PARAMETERS (.NE.0.),MHO        000000
```

AD

```
00101     22*     C              VO  -RATED VOLTAGE MAGNITUDE,VOLTS                                  000000
00101     23*     C              P1  -INPUT POWER,KW                                                 000000
00101     24*     C              EF1 -INPUT PRODUCT EFFICIENCY                                       000000
00101     25*     C              MP1 -MAXIMUM INPUT POWER,KW                                         000000
00101     26*     C              CC  -CAPITAL COST/YEAR,$                                            000000
00101     27*     C                                                                                  000000
00103     28*           COMMON /CIMPL/IMPL,ICNT/CTIME/TIME/CSIMUL/DUM(7),TMAX                        000000
00103     29*          X       /COST/CCI                                                             000000
00104     30*           REAL MP2,MP1                                                                 000000
00104     31*     C                                                                                  000000
00105     32*           P2=0.                                                                        000000
00106     33*                                                                                        000000
00106     34*           TMAX1=TMAX*.99999                                                            000000
00107     35*           IF(P1.GT.0.)GO TO 10                                                         000003
00111     36*           P2=0.                                                                        000006
00112     37*           PL=0.                                                                        000007
00113     36*           PA=0.                                                                        000010
00114     39*           MP2=MP1                                                                      000011
00115     40*           EF2=EF1                                                                      000013
00116     41*           GO TO 400                                                                    000015
00116     42*     C                                                                                  000015
00116     43*     C              COMPUTE POWER ANGLE                                                 000015
00116     44*     C                                                                                  000015
00117     45*        10 RR=P1*1000./(BM*VO*VO)                                                       000017
00120     46*           RR2=RR*RR                                                                    000025
00121     47*           IF(RR2.LE.1.)GO TO 100                                                       000027
00123     48*           PA=-90.                                                                      000032
00124     49*           RRC=0.                                                                       000034
00125     50*           IF(IMPL.EQ.2)WRITE(6,108)P1,BM,VO                                            000035
00133     51*       108 FORMAT(1HO,13H INPUT POWER ,F12.3,33H TOO HIGH RELATIVE TO ADMITTA           000050
00133     52*          XNCE ,F12.3,19H AND RATED VOLTAGE ,F12.3)                                     000050
00134     53*           IF(IMPL.EQ.2)ICNT=ICNT+1                                                     000050
00136     54*           GO TO 200                                                                    000056
00137     55*       100 THETA=-ASIN(RR)                                                              000060
00140     56*           PA=THETA*180./3.14159                                                        000063
00141     57*           RRC=SQRT(1.-RR2)                                                             000066
00141     58*     C                                                                                  000066
00141     59*     C              COMPUTE POWER LOSS AND OUTPUT POWER                                 000066
00141     60*     C                                                                                  000066
00142     61*       200 PL=VO*VO*(G1+G2+2.*GM*RRC)/1000.                                             000076
00143     62*           P2=P1-PL                                                                     000110
00144     63*           EFF= P2/P1                                                                   000112
00145     64*           IF(P2.GE.0.)GO TO 300                                                        000114
00147     65*           P2=0.                                                                        000117
00150     66*           EFF=1.                                                                       000120
00151     67*           IF(IMPL.NE.2)GO TO 300                                                       000122
00153     68*           WRITE(6,308)PL,P1                                                            000125
00157     69*       308 FORMAT(1HO,24H ADMITTANCE POWER LOSS ,F12.3,21H EXCEEDS INPUT POWE           000134
00157     70*          XR  ,F12.3)                                                                   000134
00160     71*           ICNT=ICNT+1                                                                  000134
00160     72*     C                                                                                  000134
00161     73*       300 EF2=EF1                                                                      000140
00162     74*           IF(P2.GT.0.)EF2=EF1*EFF                                                      000141
00164     75*           MP2=AMIN1(MP1,ABS(BM)*VO*VO/1000.)*EFF                                       000147
00164     76*     C                                                                                  000147
00165     77*       400 IF(IMPL.LE.1)RETURN                                                          000162
00167     78*           IF(TIME.LT.TMAX1)RETURN                                                      000170
```

```
00171     79*          CCI=CCI+CC                                    000177
00171     80*     C                                                  000177
00172     81*          RETURN                                        000202
00173     82*          END                                           000263
```


AD

7.2 TEST FUNCTION GENERATOR

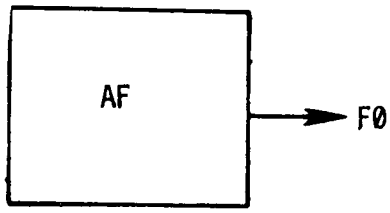

Inputs

Parameter/Port	Description
CØD	Specifies which analytic function is calculated. (See equations below for use of these inputs)
C1	
C2	
C3	
C4	
C5	

Outputs

Variable/Port	
FØ	Output variable

Calculation Sequence

```
CØD = 1   FØ = C1 + C2*SIN(C3*T + C4)
      2   FØ = C1 + C2*COS(C3*T + C4)
      3   FØ = C1 + exp(-C5*T) * SIN(C3*T + C4)
      4   FØ = C1 + exp(-C5*T) * COS(C3*T + C4)
      5   FØ = C1 + C2*T
      6   FØ = C1 + C2*exp(-C3*T)
          where: T = TIME
```

```
SUBROUTINE AF        ENTRY POINT 000143

STORAGE USED  CODE(1) 000166; DATA(0) 000014; BLANK COMMON(2) 000000

 COMMON BLOCKS

 0003   CTIME   000001

EXTERNAL REFERENCES (BLOCK, NAME)

 0004   NERR2$
 0005   SIN
 0006   COS
 0007   EXP
 0010   NERR3$

STORAGE ASSIGNMENT  (BLOCK, TYPE, RELATIVE LOCATION, NAME)

 0001   000022 10L      0001   000138 100L     0001   000035 20L      0001   000050 30L      0001   000073 40L
 0001   000116 50L      0001   000123 60L      0000   000001 INJP$    0000 I 000000 NCODE    0003 R 000000 TIME


00100      1*     CAF                                                                          000000
00101      2*            SUBROUTINE AF(FO,COD,C1,C2,C3,C4,C5)                                  000000
00101      3*     C                                                                            000000
00101      4*     C   PURPOSE - TO SIMULATE ANALYTICAL FUNCTIONS                               000000
00101      5*     C                                                                            000000
00101      6*     C                                                                            000000
00101      7*     C   METHOD  - SEE CODING                                                     000000
00101      8*     C                                                                            000000
00101      9*     C                                                                            000000
00101     10*     C   WRITTEN BY  -  ADAM LLOYD                LATEST REVISION     FEB 76      000000
00101     11*     C                                                                            000000
00101     12*     C                                                                            000000
00101     13*     C   LIMITATIONS -  NONE                                                      000000
00101     14*     C                                                                            000000
00101     15*     C                                                                            000000
00101     16*     C   INPUT/OUTPUT LIST                                                        000000
00101     17*     C                                                                            000000
00101     18*     C   FO          OUTPUT VARIABLE                        ANY    OUTPUT VAR     000000
00101     19*     C   COD         CODE IDENTIFYING ANALYTICAL FUNCTION   ---    INPUT  PARAM   000000
00101     20*     C               CODE=     FO=                                                000000
00101     21*     C               1         C1+C2*SIN(C3*TIME+C4)                              000000
00101     22*     C               2         C1+C2*COS(C3*TIME+C4)                              000000
00101     23*     C               3         C1+C2*EXP(-C5*TIME)*SIN(C3*TIME+C4)                000000
00101     24*     C               4         C1+C2*EXP(-C5*TIME)*COS(C3*TIME+C4)                000000
00101     25*     C               5         C1+C2*TIME                                         000000
00101     26*     C               6         C1+C2*EXP(-C5*TIME)                                000000
```

AF

```
00101     27*     C   C1          CONSTANT INPUTS FOR ABOVE EQNS        ---    INPUT  PARAM        000000
00101     28*     C   C2          CONSTANT INPUTS FOR ABOVE EQNS        ---    INPUT  PARAM        000000
00101     29*     C   C3          CONSTANT INPUTS FOR ABOVE EQNS        ---    INPUT  PARAM        000000
00101     30*     C   C4          CONSTANT INPUTS FOR ABOVE EQNS        ---    INPUT  PARAM        000000
00101     31*     C   C5          CONSTANT INPUTS FOR ABOVE EQNS        ---    INPUT  PARAM        000000
00103     32*           COMMON/CTIME/TIME                                                          000000
00104     33*           NCODE=C0D                                                                  000000
00105     34*           GO TO (10,20,30,40,50,60),NCODE                                            000006
00106     35*      10   FO=C1+C2*SIN(C3*TIME+C4)                                                   000022
00107     36*           GO TO 100                                                                  000033
00110     37*      20   FO=C1+C2*COS(C3*TIME+C4)                                                   000035
00111     38*           GO TO 100                                                                  000046
00112     39*      30   FO=C1+C2*EXP(-C5*TIME)*SIN(C3*TIME+C4)                                     000050
00113     40*           GO TO 100                                                                  000071
00114     41*      40   FO=C1+C2*EXP(-C5*TIME)*COS(C3*TIME+C4)                                     000073
00115     42*           GO TO 100                                                                  000114
00116     43*      50   FO=C1+C2*TIME                                                              000116
00117     44*           GO TO 100                                                                  000121
00120     45*      60   FO=C1+C2*EXP(-C5*TIME)                                                     000123
00121     46*      100  RETURN                                                                     000134
00122     47*           END                                                                        000165
```

7.3 BATTERY

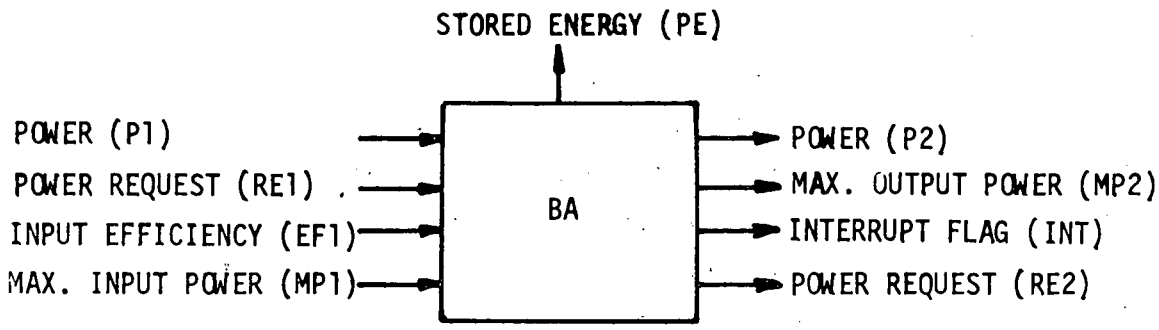

The battery model is based on the circuit diagram shown below. Current flow is determined by the output power request minus input power. Battery leakage is proportional to stored energy. Priority interrupt logic is activated when a minimum or maximum capacity level is attained.

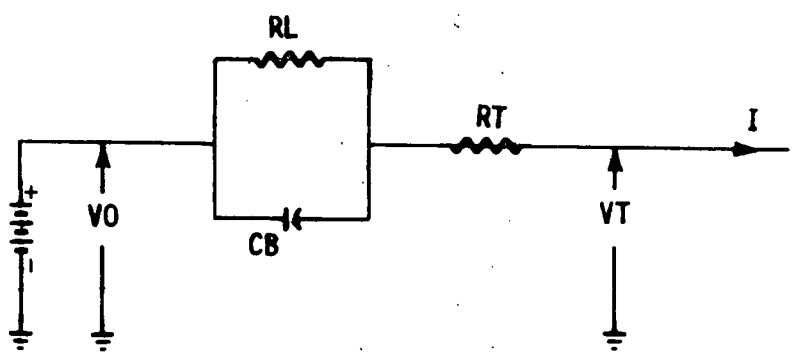

FIGURE 7.3 BATTERY CIRCUIT DIAGRAM

<u>Basic Equations</u>

The output power P2, stored energy PE, terminal current I, and capacitor voltage VC is computed using the following equations:

$$P2 = RE1$$

$$PE = (VC^2+2*V0*VC)*CB/7.2X10^6$$

$$(P2-P1)*1000 = (V0+VC)I - I^2*RT$$

$$\dot{PE} = -(I+VC/RL)(VC+V0)/1000$$

BA

Inputs

Parameter/Port		Description	Units
P	1	Input power	kw
VØ		Internal voltage	volts
RT		Terminal resistance (D = 0.001)	ohms
CB[1]		Battery capacitance (D = 2.88×10^8)	farads
RL[1]		Leakage resistance (D = 0.05)	ohms
RAP		Rated input power	kw
EF	1	Input product efficiency	-
MP	1	Maximum input power	kw
E1		Maximum energy storage	kwh
RE	1	Power request	kw
EDE		Energy deadband for priority resequencing	kwh
DT		Down time for priority resequencing	h
CC		Capital cost/year	$
CM		Maintenance cost/year	$

Outputs

Variable/Port			
P	2	Output power (=RE1)	kw
PE		Stored energy (state of charge)	kwh
I		Terminal current (+=out,-=in)	amps
VC		Capacitor voltage	volts
VT		Terminal voltage	volts
PL		Power loss	kw
TØ		Time when battery was discharged	h
MP	2	Maximum output power	kw
INT		Priority interrupt flag	-
RE	2	Maximum charging rate request	kw

D - Default values supplied
1 - Battery leakage time constant in hours = CB*RL/3600

Statistics

Variable/Port	Description	Units
MPE	Maximum stored energy	kwh
SPC	Sum of charging energy	kwh
SPD	Sum of discharging energy	kwh

Calculation Sequence

1) Compute VC

$$VC = \sqrt{7.2X10^6 * PE/CB + V\emptyset^2} - V\emptyset$$

2) Solve for terminal current I

If $(P2-P1)*1000 \geq (VC+V\emptyset)^2/4*RT$, GO TO 2'

$$I = \frac{(VC+V\emptyset) - \sqrt{(VC+V\emptyset)^2 - 4*RT*(P2-P1)*1000}}{2*RT}$$

Go to 3)

2)' $I = (VC+V\emptyset)/2*RT$ and write DIAGNOSTIC

3) Compute VT

$VT = VC+V\emptyset-I*RT$

4) Potential energy balance and power loss

$\dot{PE} = -(I+VC/RL)(VC+V\emptyset)/1000.$

$PL = (I^2*RT + VC^2/RL)/1000.$

5) Maximum charging and discharging rates

$RE2 = MIN(MP1, RAP, (E1-PE)/TINC)/EF1$

$MP2 = MIN(RAP, (VC+V\emptyset)^2/(4000*RT), (PE-EDE)/TINC)$

where TINC = integration step size

Calculation Sequence Cont.

6) Priority interrupt logic

If PE $\leq$ EDE and TØ = 10^6, TØ = TIME

If PE $\leq$ EDE and TIME - TØ $\geq$ DT, INT = 1 and go to 7)

TØ = 10^6

If PE > 2*EDE and INT = 1, INT = 0

If PE $\geq$ E1, INT = -1

If PE < E1 - EDE and INT = -1, INT = 0

7) Compute Statistics and Costs

```
SUBROUTINE BA          ENTRY POINT 000372

STORAGE USED  CODE(1) 000537; DATA(0) 000105; BLANK COMMON(2) 000000

 COMMON BLOCKS

 0003   CIMPL   000002
 0004   CTIME   000001
 0005   CSTMUL  000010
 0006   COST    000002

EXTERNAL REFERENCES (BLOCK, NAME)

 0007   SQRT
 0010   DSQRT
 0011   NWDU$
 0012   NIO2$
 0013   NERR3$

STORAGE ASSIGNMENT  (BLOCK, TYPE, RELATIVE LOCATION, NAME)

 0001   000036 100L      0001   000111 200L      0000   000015 208F      0001   000136 300L      0001   000316 400L
 0001   000274 401L      0001   000314 403L      0000 D 000000 AA        0000 R 000010 AP1       0000 R 000011 AP2
 0000 D 000002 B         0000 D 000004 B2        0000 R 000012 C         0006 R 000000 CCI       0006 R 000001 CMI
 0005 R 000000 DUM       0000 R 000013 ED2       0003 I 000001 ICNT      0003 I 000000 IMPL      0000   000053 INJP$
 0004 R 000000 TIME      0000 R 000006 TINC1     0005 R 000007 TMAX      0000 R 000007 TMAX1     0000 R 000014 WAIT
```

```
00100      1*      CBA                                                                    000000
00101      2*            SUBROUTINE BA(P2,PE,PED,IPE,I,VC,VT,PL,TO,MP2,INT,RE2,MPE,SPC,SPD,  000000
00101      3*          1      P1,VO,RT,CB,RL,RAP,EF1,MP1,E1,RE1,EDE,DT,CC,CM)                 000000
00101      4*      C                                                                          000000
00101      5*      C              PURPOSE    BATTERY MODEL                                   000000
00101      6*      C                                                                          000000
00101      7*      C              METHOD     COMPUTE STORED ENERGY AND POWER OUTPUT AS       000000
00101      8*      C                         FUNCTIONS OF POWER INPUT AND POWER REQUEST.     000000
00101      9*      C                         A RESISTOR/CAPACITOR NETWORK IS USED TO         000000
00101     10*      C                         MODEL BATTERY STORAGE.                          000000
00101     11*      C                                                                          000000
00101     12*      C              WRITTEN BY Y.K.CHAN                VERSION 1, JUNE 3,1977   000000
00101     13*      C                                                                          000000
00101     14*      C   CALL SEQUENCE                                                          000000
00101     15*      C         OUTPUTS                                                          000000
00101     16*      C              P2   -OUTPUT POWER, KW                                      000000
00101     17*      C              PE   -STORED ENERGY (STATE),KWH                             000000
00101     18*      C              PED  -STORED ENERGY DERIVATIVE                              000000
00101     19*      C              IPE  -INTEGRATOR CONTROL                                    000000
00101     20*      C              I    -TERMINAL CURRENT (+=OUT,-=IN),AMPS                    000000
```

BA

```
00101      21*      C              VC  -CAPACITOR VOLTAGE, VOLTS                                  000000
00101      22*      C              VT  -TERMINAL VOLTAGE, VOLTS                                   000000
00101      23*      C              PL  -POWER LOSS, KW                                            000000
00101      24*      C              TO  TIME WHEN BATTERY WAS DISCHARGED, HR                       000000
00101      25*      C              MP2 -MAXIMUM OUTPUT POWER, KW                                  000000
00101      26*      C              INT -PRIORITY INTERRUPT FLAG                                   000000
00101      27*      C              RE2 -MAXIMUM CHARGING RATE REQUEST, KW                         000000
00101      28*      C         STATISTICS                                                          000000
00101      29*      C              SPC -SUM OF CHARGING ENERGY, KWH                               000000
00101      30*      C              MPE -MAXIMUM STORED ENERGY,KWH                                 000000
00101      31*      C              SPD -SUM OF DISCHARGING ENERGY, KWH                            000000
00101      32*      C         INPUTS                                                              000000
00101      33*      C              P1  -INPUT POWER, KW                                           000000
00101      34*      C              VO  -INTERNAL VOLTAGE, VOLTS                                   000000
00101      35*      C              RT  -TERMINAL RESISTANCE, OHMS                                 000000
00101      36*      C              CB  -BATTERY CAPACITANCE, FARADS                               000000
00101      37*      C              RL  -LEAKAGE RESISTANCE, OHMS                                  000000
00101      38*      C              RAP -RATED INPUT POWER, KW                                     000000
00101      39*      C              EF1 -INPUT PRODUCT EFFICIENCY                                  000000
00101      40*      C              MP1 -MAXIMUM INPUT POWER, KW                                   000000
00101      41*      C              E1  -MAXIMUM ENERGY STORAGE, KWH                               000000
00101      42*      C              RE1 -POWER REQUEST, KW                                         000000
00101      43*      C              EDE -ENERGY DEADBAND FOR PRIORITY RESEQUENCING, KWH            000000
00101      44*      C              DT  -DOWNTIME FOR PRIORITY RESEQUENCING, HR                    000000
00101      45*      C              CC  -CAPITAL COST/YEAR, $                                      000000
00101      46*      C              CM  -MAINTENANCE COST/YEAR, $                                  000000
00101      47*      C                                                                             000000
00103      48*           COMMON /CIMPL/IMPL,ICNT/CTIME/TIME/CSIMUL/DUM(7),TMAX/COST/CCI,CMI       000000
00104      49*           REAL I,MP2,MPE,MP1,INT                                                   000000
00105      50*           DOUBLE PRECISION AA,B,B2                                                 000000
00106      51*           TINC1=DUM(7)*.5                                                          000000
00106      52*      C                                                                             000000
00107      53*           IF(IMPL.GT.0) GO TO 100                                                  000002
00111      54*           IF(RT.EQ..99999)RT=.001                                                  000005
00113      55*           IF(CB.EQ..99999)CB=2.88E8                                                000012
00115      56*           IF(RL.EQ..99999)RL=.05                                                   000017
00117      57*           TO=1000000.                                                              000024
00120      58*           INT=0                                                                    000026
00121      59*           TMAX1=TMAX*.99999                                                        000027
00122      60*                                                                                    000032
00122      61*           MPE=0.                                                                   000032
00123      62*           SPC=0.                                                                   000033
00124      63*           SPD=0.                                                                   000034
00124      64*      C                                                                             000034
00124      65*      C              CAPACITOR VOLTAGE                                              000034
00124      66*      C                                                                             000034
00125      67*        100 VC=SQRT((7.2E6)*PE/CB + VO**2) -VO                                      000036
00125      68*      C                                                                             000036
00125      69*      C              TERMINAL CURRENT                                               000036
00125      70*      C                                                                             000036
00126      71*           P2=RE1                                                                   000051
00127      72*           AA=(P2-P1)*4000.*RT                                                      000053
00130      73*           B=VC+VO                                                                  000062
00131      74*           B2=B*B                                                                   000066
001[illegible]      75*           IF(AA.GT.B2) GO TO 200                                           000070
001        76*           I= B-DSQRT(B2-AA)                                                        000073
001        77*           I=I/(2.*RT)                                                              000103
```

```
00136      78*          GO TO 300                                                    000107
00136      79*    C                                                                  000107
00137      80*      200 I=B/(2.*RT)                                                  000111
00140      81*          IF(IMPL.EQ.2)WRITE(6,208)P2                                  000116
00144      82*      208 FORMAT(1H0,15H POWER REQUEST ,F12.3,50H EXCEEDS BATTERY CAPABILITY  000127
00144      83*         1. CHECK VC,VO, AND RT. )                                     000127
00145      84*          IF (IMPL.EQ.2)ICNT=ICNT+1                                    000127
00145      85*    C                                                                  000127
00145      86*    C                TERMINAL VOLTAGE                                  000127
00145      87*    C                                                                  000127
00147      88*      300 VT=VC+VO-I*RT                                                000136
00147      89*    C                                                                  000136
00147      90*    C                POTENTIAL ENERGY BALANCE AND ENERGY LOSS          000136
00147      91*    C                                                                  000136
00150      92*          IF(IPE.NE.0)PED=(-I-VC/RL)*(VC+VO)/1000.                     000144
00152      93*          PL=(I*I*RT+VC*VC/RL)/1000.                                   000154
00152      94*    C                                                                  000154
00152      95*    C                MAXIMUM CHARGING AND DISCHARGING RATES            000154
00152      96*    C                                                                  000154
00153      97*          AP1= AMAX1(0.,(E1-PE)/DUM(7))                                000165
00154      98*          RE2=AMIN1(MP1,RAP,AP1)                                       000175
00155      99*          RE2=RE2/EF1                                                  000207
00156     100*          AP2= AMAX1(0.,(PE-EDE)/DUM(7))                               000211
00157     101*          MP2=AMIN1(RAP,B2/(4000.*RT),AP2)                             000221
00157     102*    C                                                                  000221
00157     103*    C                PRIORITY INTERRUPT                                000221
00157     104*    C                                                                  000221
00160     105*          C=E1-EDE                                                     000241
00161     106*          ED2=EDE+EDE                                                  000244
00162     107*          IF(PE.GT.EDE)GO TO 401                                       000247
00164     108*          IF(TO.GT.999999.)TO=TIME                                     000253
00166     109*          WAIT=TIME-TO                                                 000261
00167     110*          IF (WAIT.GT.DT)INT=1                                         000264
00171     111*          GO TO 400                                                    000272
00172     112*      401 TO=1000000                                                   000274
00173     113*          IF(PE.LE.ED2)GO TO 400                                       000275
00175     114*          IF(PE.GT.E1)GO TO 403                                        000301
00177     115*          IF(PE.GT.C)GO TO 400                                         000305
00201     116*          INT=0                                                        000311
00202     117*          GO TO 400                                                    000312
00203     118*      403 INT=-1                                                       000314
00204     119*      400 CONTINUE                                                     000316
00204     120*    C                                                                  000316
00205     121*          IF(IMPL.LE.1)RETURN                                          000316
00205     122*    C                                                                  000316
00205     123*    C                STATISTICS                                        000316
00205     124*    C                                                                  000316
00207     125*          MPE=AMAX1(MPE,PE)                                            000324
00210     126*          SPC=SPC+TINC1*P1                                             000332
00211     127*          SPD=SPD+TINC1*P2                                             000336
00211     128*    C                                                                  000336
00212     129*          IF(TIME.LT.TMAX1)RETURN                                      000342
00214     130*          CCI=CCI+CC                                                   000351
00215     131*          CMI=CMI+CM                                                   000354
00215     132*    C                                                                  000354
00216     133*          RETURN                                                       000357
00217     134*          END                                                          000536
```

7.4 BURNER

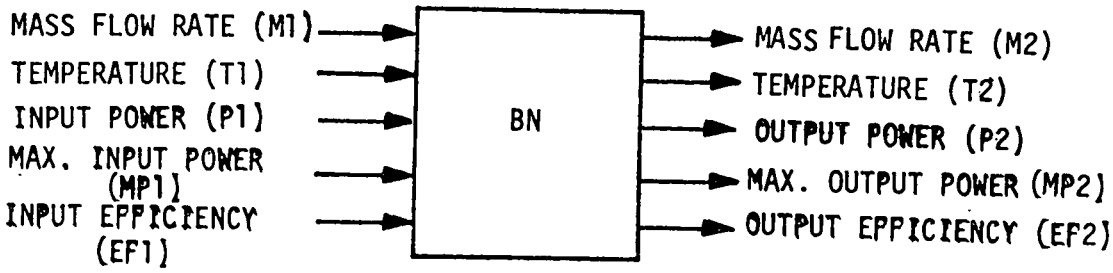

The burner model computes the amount of fuel required to be burned in the inlet airstream to raise the air temperature from the given inlet temperature to the specified outlet temperature. The fuel mass flow rate when integrated over time allows calculation of the cost of burner fuel.

Basic Equation

The mass of fuel consumed, F, is computed from the equation:

$$\dot{F} = \frac{M1*CP*(T2-T1)}{NU*HF}$$

BN

Inputs

Parameter/Port		Description	Units
M	1	Inlet air mass flow rate	lb/h
CP		Air heat capacity (D = $72X10^{-6}$)	kwh/lb-°F
T	1	Inlet air temperature	°F
T	3	Outlet air temperature (specified)	°F
NU		Combustor efficiency (D = 0.98)	-
HF		Fuel heating value (D = 5.56)	kwh/lb
CF		Specific fuel cost (D = 0.094)	$/lb
FDM		Maximum allowable fuel mass flow rate (D=17800)	lb/h
CB		Burner cost coefficient (D = 1.683)	$/lb/h
LE		Burner life expectancy	years
MDM		Maximum allowable air mass flow rate (D=27000)	lb/h
EF	1	Input product efficiency	-
MP	1	Maximum input power	kw
P	1	Input power	kw

Outputs

Variable/Port			
F		Fuel mass consumed (state)	lb
EF	2	Output product efficiency	-
MP	2	Maximum output power	kw
T	2	Outlet air temperature	°F
FD		Fuel mass flow rate	lb/h
CCØ		Burner capital cost/year	$
CØ		Fuel cost	$
M	2	Outlet mass flow rate (= M1)	lb/h
P	2	Output power	kw

Statistics

FDU	Maximum fuel mass flow rate	lb/h

D - Default values supplied

The calculation sequence and default values are based on a burner sized using first principles to maintain the outlet temperature at 600°F assuming an inlet temperature of 120°F and a mass flowrate of 2.7×10^4 lb/h. These conditions represent the extreme conditions expected and should satisfy all burner requirements. No. 6 fuel oil is assumed to be the fuel type. Cost and heating values were obtained from References 1 and 2. Cost estimates for the burner were estimated from the results of Reference 1.

Calculation Sequence

1) Capital Cost

CCØ = CB*MDM/LE

2) Maximum air mass flow rate allowed

If M1 = 0 set EFF = 1, MP2 = MP1 and go to 3)

$$M1M = \min \left\{ \frac{NU*HF*FDM}{CP*(T3-T1)} , MDM \right\}$$

If T1 > T3, M1M = MDM

3) Efficiency and maximum discharge power

EFF = 1 + M1*CP*(T2-T1)/P1 (if P1 > 0)

EF2 = EF1*EFF

MP2 = min {MP1*EFF, P1 * M1M/M1} (if M1 > 0)

P2 = P1*EFF

1. "Preliminary Feasibility Evaluation of Compressed Air Storage Power Systems," United Technologies AER 74-00242, December 1976.

2. Steam, Its Generation and Use, Babcock and Wilcox, New York, NY, 1972.

Calculation Sequence Cont.

4) Fuel mass flow rate

$$\dot{F} = \frac{M1*CP*(T2-T1)}{NU*HF}$$

T2 = MAX(T1, T3)

If M1 > M1M write DIAGNOSTIC

5) Compute Statistics and Costs

CØ = CF * F

```
SUBROUTINE BN        ENTRY POINT 000270

STORAGE USED  CODE(1) 000411; DATA(0) 000052; BLANK COMMON(2) 000000

 COMMON BLOCKS

 0003   CIMPL  000002
 0004   CTIME  000001
 0005   CSIMUL 000010
 0006   COST   000003

EXTERNAL REFERENCES (BLOCK, NAME)

 0007   NWDUS
 0010   NIO2$
 0011   NERR3$

STORAGE ASSIGNMENT  (BLOCK, TYPE, RELATIVE LOCATION, NAME)

 0001   000056 100L      0001   000237 1000L     0000   000003 1010F     0001   000121 200L      0001   000107 300L
 0006 R 000000 CCI       0006   000001 CMI       0006 R 000002 COP       0005   000000 DUM       0000 R 000002 EFF
 0003 I 000001 ICNT      0003 I 000000 IMPL      0000   000034 INJPS     0000 R 000000 M1M       0004 R 000000 TIME
 0005 R 000007 TMAX      0000 R 000001 TMAX1
```

```
00100      1*      CBN                                                                    000000
00101      2*            SUBROUTINE BN(F,DF,IF,EF2,MP2,T3,FD,CC,CO,M2,P2,FDU,M1,CP,T1,T2  000000
00101      3*          1             ,NU,HF,CF,FDM,CB,LE,MDM,EF1,MP1,P1)                  000000
00101      4*      C                                                                      000000
00101      5*      C   PURPOSE    COMPUTE FUEL REQUIRED TO RAISE THE AIRSTREAM            000000
00101      6*      C                                                                      000000
00101      7*      C              TEMPERATURE A GIVEN INCREMENT.                          000000
00101      8*      C                                                                      000000
00101      9*      C   METHOD     INTEGRATE THE FUEL MASS FLOW RATE OVER TIME             000000
00101     10*      C                                                                      000000
00101     11*      C   WRITTEN BY F.O. MAHONY                  VERSION 1, MARCH 22 1977   000000
00101     12*      C                                                                      000000
00101     13*      C   CALL SEQUENCE                                                      000000
00101     14*      C                                                                      000000
00101     15*      C         OUTPUTS                                                      000000
00101     16*      C              F    - FUEL MASS CONSUMED SINCE TIME=0 (STATE), LB     000000
00101     17*      C              DF   - FUEL MASS DERIVATIVE                            000000
00101     18*      C              IF   - STATUS INDICATOR                                000000
00101     19*      C              EF2  - OUTPUT PRODUCT EFFICIENCY                       000000
00101     20*      C              MP2  - MAXIMUM OUTPUT POWER, KW                        000000
00101     21*      C              T3   - OUTLET AIR TEMPERATURE, DEG F                   000000
00101     22*      C              FD   - FUEL MASS FLOW RATE, LB/HR                      000000
00101     23*      C              CC   - BURNER CAPITAL COST/YEAR, $                     000000
```

```
00101      24*      C              CO  - FUEL COST, $                                          000000
00101      25*      C              M2  - OUTLET MASS FLOW RATE, LB/HR                          000000
00101      26*      C              P2  - OUTPUT POWER, KW                                      000000
00101      27*      C              FDU - OBSERVED MAXIMUM FUEL MASS FLOW RATE, LB/HR           000000
00101      28*      C                                                                          000000
00101      29*      C         INPUTS                                                           000000
00101      30*      C              M1  - INLET AIR MASS FLOW RATE, LB/HR                       000000
00101      31*      C              CP  - AIR HEAT CAPACITY, KWH/LB-DEG F                       000000
00101      32*      C              T1  - INLET AIR TEMPERATURE, DEG F                          000000
00101      33*      C              T2  - OUTLET AIR TEMPERATURE, DEG F                         000000
00101      34*      C              NU  - COMBUSTER EFFICIENCY                                  000000
00101      35*      C              HF  - FUEL HEATING VALUE, KWH/LB-DEG F                      000000
00101      36*      C              CF  - SPECIFIC FUEL COST                                    000000
00101      37*      C              FDM - MAXIMUM ALLOWABLE FUEL MASS FLOW RATE, LB/HR          000000
00101      38*      C              CB  - BURNER COST COEFFICIENT                               000000
00101      39*      C              LE  - BURNER LIFE EXPECTANCY, YEARS                         000000
00101      40*      C              MDM - MAXIMUM ALLOWABLE AIR MASS FLOW RATE, LB/HR           000000
00101      41*      C              EF1 - INPUT PRODUCT EFFICIENCY                              000000
00101      42*      C              MP1 - MAXIMUM INPUT POWER, KW                               000000
00101      43*      C              P1  - INPUT POWER, KW                                       000000
00101      44*      C                                                                          000000
00103      45*           COMMON/CIMPL/IMPL,ICNT /CTIME/TIME /CSIMUL/DUM(7),TMAX                000000
00104      46*           COMMON/COST/CCI,CMI,COP                                               000000
00105      47*           REAL MP2,M2,M1,NU,LE,MDM,MP1,M1M                                      000000
00105      48*      C                                                                          000000
00106      49*           IF(IMPL.GT.0) GO TO 100                                               000000
00110      50*           TMAX1 =TMAX*.99999                                                    000002
00111      51*           IF(CP .EQ. .99999) CP = 72.0E-6                                       000005
00113      52*           IF(NU .EQ. .99999) NU = 0.98                                          000012
00115      53*           IF(HF .EQ. .99999) HF = 5.56                                          000017
00117      54*           IF(CF .EQ. .99999) CF = 0.094                                         000024
00121      55*           IF(FDM.EQ. .99999) FDM=1.78E+4                                        000031
00123      56*           IF(CB .EQ. .99999) CB =1.683                                          000036
00125      57*           IF(MDM.EQ. .99999) MDM=2.7E+4                                         000043
00125      58*      C                                                                          000043
00127      59*           FDU = 0.0                                                             000050
00130      60*           CC =CB*MDM/LE                                                         000051
00131      61*       100 EFF=1.0                                                               000056
00132      62*           IF(M1.EQ.0.0)GO TO 200                                                000057
00134      63*           M1M=MDM                                                               000061
00135      64*           IF(T1.GT.T2) GO TO 200                                                000063
00135      65*      C                                                                          000063
00135      66*      C              MAXIMUM ALLOWABLE AIR FLOW RATE                             000063
00135      67*      C                                                                          000063
00137      68*           M1M=AMIN1(NU*HF*FDM/CP/(T2-T1),MDM)                                   000067
00137      69*      C                                                                          000067
00140      70*           IF(M1.GT.M1M) GO TO 1000                                              000103
00142      71*       300 CONTINUE                                                              000107
00142      72*      C                                                                          000107
00142      73*      C              EFFICIENCY AND MAXIMUM DISCHARGE POWER                      000107
00143      74*           IF(P1.EQ.0.0)GO TO 200                                                000107
00143      75*      C                                                                          000107
00143      76*      C                                                                          000107
00145      77*           EFF = 1.0+M1*CP*(T2-T1)/P1                                            000110
00145      78*      C                                                                          000110
00146      79*       200 EF2 = EF1*EFF                                                         000121
00147      80*           MP2=MP1                                                               000123
```

```
00150      81*          IF(M1.GT.0.) MP2=AMIN1(MP1*EFF,P1*M1M/M1)                    000125
00152      82*          P2=P1*EFF                                                    000142
00152      83*     C                                                                 000142
00152      84*     C                FUEL FLOW RATE                                   000142
00152      85*     C                                                                 000142
00153      86*          IF(IF.NE.0) DF= M1*CP*(T2-T1)/NU/HF                          000145
00155      87*          IF(T1.GT.T2) DF=0.0                                          000157
00157      88*          FD=DF                                                        000164
00157      89*     C                                                                 000164
00157      90*     C                COSTS                                            000164
00160      91*          CO = CF*F                                                    000166
00161      92*          T3= AMAX1(T1,T2)                                             000171
00162      93*          M2=M1                                                        000177
00162      94*     C                                                                 000177
00162      95*     C                STATISTICS                                       000177
00163      96*          IF(IMPL.LE.1) RETURN                                         000201
00163      97*     C                                                                 000201
00165      98*          FDU = AMAX1(FD,FDU)                                          000210
00165      99*     C                                                                 000210
00166     100*          IF(TIME.LT.TMAX1) RETURN                                     000216
00170     101*          CCI= CCI + CC                                                000225
00171     102*          COP= COP + CO                                                000230
00172     103*          RETURN                                                       000233
00172     104*     C                                                                 000233
00173     105*     1000 IF(IMPL.EQ.2)WRITE(6,1010) M1,M1M                            000237
00200     106*     1010 FORMAT(1H0,28HBN INLET AIR MASS FLOW RATE ,F12.3,            000250
00200     107*         1          36H    GREATER THAN MAXIMUM ALLOWABLE ,F12.3)     000250
00201     108*          IF(IMPL.EQ.2)ICNT=ICNT+1                                     000250
00203     109*          GO TO 300                                                    000256
00204     110*          END                                                          000410
```


BN

7.5 COST MONITOR[1]

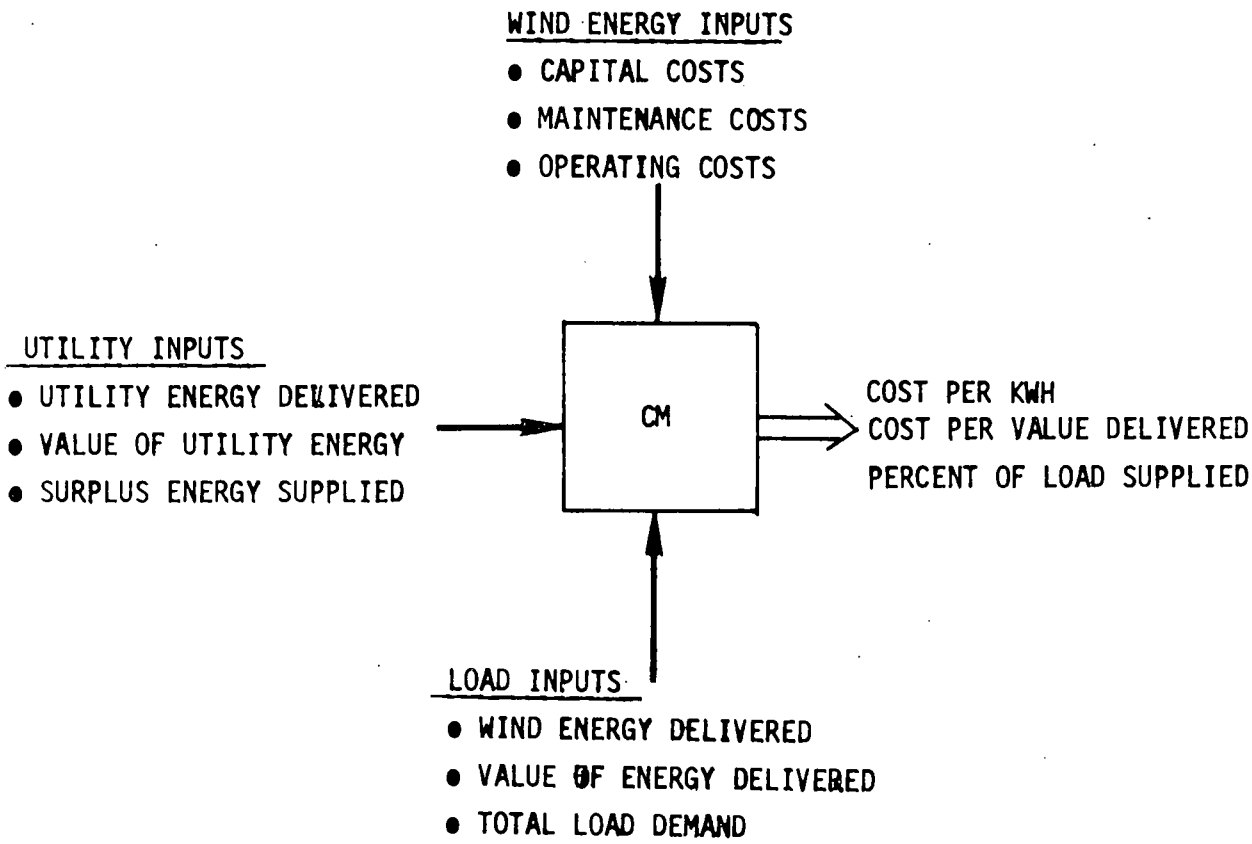

This component sums the capital, operating and maintenance costs of all system components. The total yearly cost TC is then computed using a fixed charge rate factor which represents depreciation, cost of money, insurance and taxes.

---

[1] This component must be placed last in the model generation input file, i.e., just prior to the END OF MODEL command.

The total wind energy delivered to the loads plus surplus energy is then summed and yearly energy delivered TED computed. Cost of operation in mills is then given by

Wind system cost/kwh = TC * 1000./TED

Similarly, the value of energy delivered to the loads is summed minus the utility energy value and including the value of surplus energy, and factored to give yearly energy value delivered VED. Energy value in mills is given by

Load value/kwh = VED * 1000./TED.

Cost per value delivered is the ratio of the above two equations.

In addition to the above cost calculations, percent of total load supplied by wind storage PCW, percent of load supplied by utilities PCU and, percent of wind energy surplused to the utilities PCS is computed. The total cost in mills to meet the load is then given by

Load cost/kwh = (wind system cost/kwh * PCW + utility cost/kwh * PCU)/100.,

where

Utility cost/kwh = value of utility energy * 1000./utility energy delivered.

CM

Inputs

Parameter/Port	Description	Units
CR	Capital charge rate	%/year
LE	System life expectancy	years

Common Block Inputs

CC	Total yearly capital costs	$
CM	Total yearly maintenance costs	$
CO	Operating and fuel costs over TMAX	$
TMAX	Simulation time interval	hr
VDE	Value of energy delivered (including surplus)	$
TDE	Wind energy delivered (including surplus)	kwh
TLD	Total load demand	kwh
UTV	Value of utility energy	$
UTD	Utility energy delivered	kwh
SPD	Surplus wind energy supplied	kwh

Outputs [1]

	Total yearly costs (TC)	$
	Yearly energy delivered (TED)	kwh
	Cost of energy per kwh	mills
	Yearly value delivered (VED)	$
	Cost per value delivered	-
	Percent of load supplied by	
	Wind Storage (PCW)	-
	Utility (PCU)	-
	Surplus energy load factor (PCS)	-
	Total load cost per kwh	mills

[1] Printout only occurs when simulation is completed. Thus no output variable symbol is required.

```
SUBROUTINE CM        ENTRY POINT 000213

STORAGE USED  CODE(1) 000226; DATA(0) 000330; BLANK COMMON(2) 000000

 COMMON BLOCKS

 0003   COST   000011
 0004   CIMPL  000001
 0005   CTIME  000001
 0006   CSIMUL 000010

EXTERNAL REFERENCES (BLOCK, NAME)

 0007   NWDU$
 0010   NIO2$
 0011   NERR3$

STORAGE ASSIGNMENT  (BLOCK, TYPE, RELATIVE LOCATION, NAME)

 0001   000020 100L      0000   000016 200F      0000   000034 300F      0000   000105 400F      0000   000210 500F
 0003 R 000000 CC        0000 R 000003 CCY       0003 R 000001 CMA       0003 R 000002 CO        0000 R 000002 COY
 0000 R 000015 CPKWH     0000 R 000011 CPV       0006   000000 DUM       0000 R 000005 EDE       0004 I 000000 IMPL
 0000   000313 INJP$     0000 I 000006 IVDE      0000 I 000001 LLE       0000 R 000012 PCD       0000 R 000014 PCS
 0000 R 000013 PCU       0003 R 000010 SPD       0003 R 000004 TDE       0005 R 000000 TIME      0003 R 000005 TLD
 0006 R 000007 TMAX      0000 R 000000 TMAX1     0000 R 000004 TOY       0000 R 000007 TOYN      0003 R 000007 UTD
 0003 R 000006 UTV       0003 R 000003 VDE       0000 R 000010 VDEN
```

```
00100      1*     COST                                                                    000000
00101      2*            SUBROUTINE CM(DUMM,FCR,LE)                                       000000
00101      3*     C                                                                       000000
00101      4*     C   PURPOSE    SUMMARIZE WIND ENERGE STORAGE COSTS AND LEVELIZED         000000
00101      5*     C              ENERGY COSTS PER KWH.                                    000000
00101      6*     C                                                                       000000
00101      7*     C   WRITTEN BY A.W. WARREN                        VERSION 1, MAY 1977    000000
00101      8*     C                                                                       000000
00101      9*     C   INPUT PARAMETERS                                                    000000
00101     10*     C                                                                       000000
00101     11*     C              FCR  - FIXED CHARGE RATE FACTOR INCLUDING DEPRECIATION,  000000
00101     12*     C                     MONEY COST, INSURANCE, AND TAXES,  PER YEAR       000000
00101     13*     C              LE   - SYSTEM LIFE EXPECTANCY , YEARS                    000000
00101     14*     C              TMAX - SIMULATION TIME, HR                               000000
00101     15*     C              CC   - TOTAL YEARLY CAPITAL COSTS, $                     000000
00101     16*     C              CM   - TOTAL YEARLY MAINTENANCE COSTS, $                 000000
00101     17*     C              CO   - TOTAL OPERATING AND FUEL COSTS OVER TMAX, $       000000
001       18*     C              VDE  - VALUE OF ENERGY DELIVERED OVER TMAX, $            000000
001       19*     C              TDE  - TOTAL ENERGY DELIVERED OVER TMAX, KWH             000000
001       20*     C              TLD  - TOTAL LOAD DEMAND OVER TMAX, KWH                  000000
```

```
00101      C              UTV  - VALUE OF UTILITY ENERGY SUPPLIED LESS SURPLUS VALUE, $      000000
00101      C              UTD  - TOTAL UTILITY ENERGY DELIVERED, KWH                        000000
00101      C              SPD  - TOTAL SURPLUS ENERGY SUPPLIED TO UTILITY, $                000000
00101      C                                                                                000000
00103            COMMON /COST/ CC, CMA,CO,VDE,TDE,TLD,UTV,UTD ,SPD                          000000
00104            COMMON /CIMPL/IM L  /CTIME/ TIME /CSIMUL/ DUM(7),TMAX                      000000
00105            REAL LE                                                                    000000
00105      C                                INITIALIZATION                                  000000
00105      C                                                                                000000
00106            IF(IMPL.GT.0)GO TO 100                                                     000000
00110            DUMM=0.0                                                                   000002
00111            CC = 0 .                                                                   000003
00112            CMA = 0.                                                                   000004
00113            CO = 0.                                                                    000005
00114            VDE= 0.                                                                    000006
00115            TDE= 0.                                                                    000007
00116            TLD= 0.                                                                    000010
00117            UTV=0.                                                                     000011
00120            UTD=0.                                                                     000012
00121            SPD=0.                                                                     000013
00122            TMAX1= TMAX*.99999                                                         000014
00122      C                                                                                000014
00123        100 IF(TIME.LT.TMAX1)RETURN                                                    000020
00125            IF(IMPL.LE.1)RETURN                                                        000026
00125      C                                                                                000026
00125      C                                COST SUMMARY OUTPUT                             000026
00125      C                                                                                000026
00127            LLE = LE                                                                   000040
00130            WRITE(6,200)LLE                                                            000047
00133        200 FORMAT(1H1,35X,33H WIND ENERGY STORAGE COST SUMMARY // 1H ,40X,I2,         000055
00133          1 17H  YEAR LIFE CYCLE )                                                     000055
00133      C                                                                                000055
00134            COY = CO*8760./TMAX                                                        000055
00135            CCY = CC*LE*FCR*.01                                                        000061
00136            TOY = COY + CMA + CCY                                                      000066
00137            WRITE(6,300)CCY,CMA,COY,TOY                                                000071
00145        300 FORMAT(//// 30X,22H0  YEARLY SYSTEM COSTS/ 1H*,29X,1H*/ 1H-,42X,          000102
00145          1 12HCAPITAL COST,12X,F8.0,2H $ / 1H ,42X, 17H(INCLUDING FIXED ,              000102
00145          2  8HCHARGES) / 1H0,42X,16HFIXED O + M COST, 8X,F8.0,2H $ /1H0 ,             000102
00145          3 42X,21HOPERATING + FUEL COST, 3X,F8.0,2H $ / 1H0,42X,5HTOTAL,              000102
00145          4 19X,F8.0,2H $ )                                                            000102
00145      C                                                                                000102
00146            EDE  = TDE * 8760./TMAX                                                    000102
00147            IVDE = VDE * 8760./TMAX                                                    000106
00150            TOYN = TOY*1000./ EDE                                                      000120
00151            VDEN = VDE*1000./ TDE                                                      000124
00152            CPV  = TOYN / VDEN                                                         000130
00152      C                                                                                000130
00153            WRITE(6,400)EDE,TOYN,IVDE,VDEN,CPV                                         000132
00162        400 FORMAT(//// 30X,26H0  ENERGY DELIVERED        / 1H*,29X,1H* / 1H-,         000144
00162          1 42X,16HENERGY DELIVERED, 7X,F9.0,4H KWH / 1H0,33X,50(1H*) /                000144
00162          1  1H ,33X,1H*,48X,1H* /                                                     000144
00162          2 1H ,33X,1H*, 8X,19HENERGY COST PER KWH, 7X,F6.1,9H MILLS  * /              000144
00162          2  1H ,33X,1H*,48X,1H* / 1H ,                                                000144
00162          3 33X,10(5H*****) / 1H0,42X,25HVALUE OF ENERGY DELIVERED,I7,                 000144
00162          4 2H $ / 1H ,42X,22H(VALUE OF FUEL SAVED) / 1H0,42X,20HENERGY VALUE          000144
00162          5 PER KWH, 6X,F6.1,6H MILLS / 1H0,42X,24HCOST PER VALUE DELIVERED,           000144
```

```
00162     78*          6 2X,F6.2)                                                    000144
00162     79*     C                                                                  000144
00163     80*          PCD= (TDE-SPD)*100./TLD                                       000144
00164     81*          PCU= UTD*100./TLD                                             000150
00165     82*          PCS= SPD*100./TLD                                             000154
00166     83*          CPKWH= (TOYH*(TDE-SPD) + UTV*1000.)/TLD                       000160
00167     84*          WRITE(6,500)PCD ,PCU,PCS,CPKWH                                000167
00175     85*        500 FORMAT(//// 30X,31HO  LOAD FACTOR                  / 1H+,29X,  000200
00175     86*          1  1H+ / 1H-,42X,                                             000200
00175     87*          1 26HPERCENT OF LOAD SUPPLIED  , F6.1, 2H  / 1H ,42X,22HBY TOTAL WIN  000200
00175     88*          2ND SYSTEM        / 1H0,42X,24HPERCENT OF LOAD SUPPLIED,2X,F6.1 /  000200
00175     89*          2 1H ,41X,11H BY UTILITY  /                                   000200
00175     90*          3  1H0,42X,26HPERCENT OF WIND ENERGY     , F6.1 /             000200
00175     91*          3 1H ,42X,9HSURPLUSED  /                                      000200
00175     92*          4  1H0,42X,23HCOST TO MEET LOAD        , 3X,F6.1,6H MILLS/    000200
00175     93*          5 1H ,42X,27H(WIND + UTILITY)            / 1H1)               000200
00175     94*     C                                                                  000200
00176     95*          RETURN                                                        000200
00177     96*          END                                                           000225
```

7.6 COMPRESSOR (PNEUMATIC)

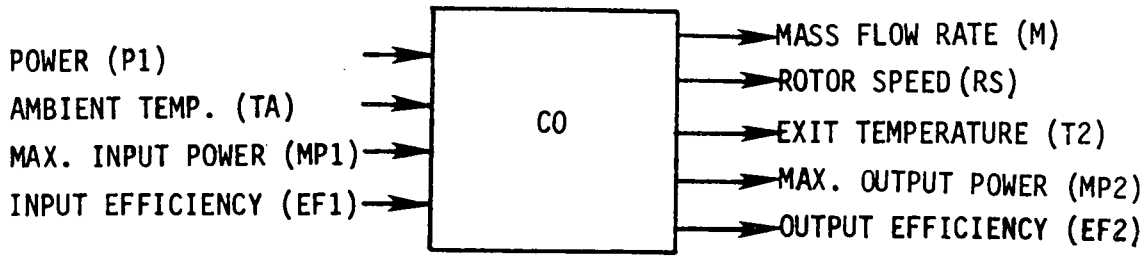

The compressor model represents the off-design performance of a typical axial flow compressor. The compressor is assumed designed for a specified set of design operating conditions and performance requirements. The mass flow rate is assumed directly proportional to angular velocity and independent of the pressure ratio across the compressor. This is expected to hold for ±15% of the design mass flow rate. The polytropic efficiency of the compressor is assumed to be a weak function of the angular velocity. Initial calculations are made with the design polytropic efficiency, and refinements made after the off-design parameters are calculated.

Basic Equations

The expression for the angular velocity is

$$RS = P1 * \frac{RSD}{MD} \frac{EFF}{CP*(TA+460)*\left[(PR2/PA)**A - 1\right]}$$

where:

```
EFF = ((PR2/PA)**(A*NP) - 1.)/((PR2/PA)**A - 1.)
A = (GAM -1)/GAM*NP)
```

Inputs

Parameter/Port		Description	Units
P	1	Input power	kw
RSD		Design angular velocity (D = 3600)	rpm
MD		Design mass flow rate (D = 3000)	lb/h
CP		Heat capacity of air (D = 7.2×10^{-5})	kwh/lb°F
TA		Inlet air temperature (ambient) (D = 70)	°F
PR	2	Exit pressure (D = 147)	psi
PA		Inlet pressure (ambient) (D = 14.7)	psi
GAM		Heat capacity ratio (D = 1.4)	-
EF	1	Input product efficiency	-
MP	1	Maximum input power	kw
NPD		Design polytropic efficiency (D = 0.88)	-
PID		Design inlet pressure (ambient) (D = 14.7)	psi
PØD		Design outlet pressure (D = 147)	psi
TID		Design inlet air temp (ambient) (D = 70)	°F
CK		Compressor capacity cost coefficient[1] (D = 1.0)	-
FØ		Compressor exponent for cost calculations (D = 0.75)	-

Outputs

Variable/Port			
NP		Polytropic efficiency	-
EF	2	Output product efficiency	-
MP	2	Maximum output power	kw
TØ		Torque	ft-lb
M		Mass flow rate	lb/h
T	2	Exit temperature	°F
RS		Angular velocity	rpm
CCØ		Cost of compressor/year	$

[1] CK = capital cost (known unit)/(design point mass flow rate)^{FO}* LN (outlet/inlet pressure ratio)*(life expectancy of unit)

D - Default values supplied

Statistics	Description	Units
MT	Maximum temperature	^{o}F
MF	Maximum mass flow rate	lb/h

The calculation sequence and the default values are based on the assumption of an axial flow compressor, nominally rated at 125kw, and a pressure ratio of 10. The equations used relate first order effects among the various physical quantities and were derived from first principles originally to support the research work of Reference 1. Cost scaling was also developed in that reference based on cost estimates obtained from turbomachinery manufacturers.

Calculation Sequence

1) Costs (First pass only)

$$CC\emptyset = CK * (MD)**F\emptyset * LN\left(\frac{P\emptyset D}{PID}\right)$$

If P1 > 0 go to 2)

A = (GAM-1)/(GAM*NPD)

RAT = (PØD/PID)**A

EFF = 1, RS = 0, go to 3)

1. "Closed Cycle High Temperature Central Receiver Concept for Solar Electric Power," BEC/EPRI RP 377-1, June 1976.

Calculation Sequence Cont.

2) Angular velocity iteration

A = (GAM-1)/(GAM*NP) (Initially NP = NPD)

RAT = (PR2/PA)**A

EFF = (RAT**NP-1)/(RAT-1)

$$\frac{RS}{RSD} = \frac{P1}{MD} \frac{EFF}{CP*(TA+460) * (RAT - 1)}$$

Polytropic efficiency

$$NP = 1 - (1 - NPD)*[2.0- (\frac{PID}{PA}* \frac{(TA+460)}{(TID+460)} *\frac{RSD}{RS})**0.2]$$

Iterate until NP and RS are consistent

(If iteration doesn't converge, then write DIAGNOSTIC and exit)

3) Mass flow rate

M = MD*RS/RSD

4) Exit temperature

T2 = (TA+460)*RAT -460

5) Torque

If P1 ≤ 0, set TØ = 0 and go to 6)

TØ = P1*737.6/(RS*2π/60)

6) Efficiency and maximum power

EF2 = EF1*EFF

MP2 = MIN(MP1*EFF, 1.5*MD*CP*(T2-TA))

7) Compute Statistics and Costs

```
SUBROUTINE CO          ENTRY POINT 000420

STORAGE USED  CODE(1) 000613; DATA(0) 000066; BLANK COMMON(2) 000000

 COMMON BLOCKS

 0003   CIMPL   000001
 0004   CTIME   000001
 0005   CSTMUL  000010
 0006   COST    000001

EXTERNAL REFERENCES (BLOCK, NAME)

 0007   XPRR
 0010   ALOG
 0011   NWDUS
 0012   NIO2S
 0013   NSTOPS
 0014   NERR3S

STORAGE ASSIGNMENT  (BLOCK, TYPE, RELATIVE LOCATION, NAME)

 0001   000136 100L      0001   000375 1000L     0000   000010 101CF     0001   000166 200L      0001   000271 300L
 0001   000315 400L      0000 R 000005 A         0006 R 000000 CC1       0005   000000 DUM       0000 R 000003 EFF
 0003 I 000000 IMPL      0000   000052 INJPS     0000 I 000002 ISP       0000 R 000000 PI        0000 R 000004 RAT
 0000 R 000006 RSNO      0004 R 000000 TIME      0005 R 000007 TMAX      0000 R 000001 TMAX1     0000 R 000007 XNP
```

```
00100      1*     CCO                                                                    000000
00101      2*            SUBROUTINE CO(NP,EF2,MP2,TO,M,T2,RS,CC,MT,MF,P1,RSD,MD,CP,TA,PR2,   000000
00101      3*          1          PR1,GAM,EF1,MP1,NPD,PID,POD,TID,CK,FO)                   000000
00101      4*     C                                                                       000000
00101      5*     C   PURPOSE    PERFORMANCE MODEL OF AXIAL FLOW COMPRESSOR                000000
00101      6*     C                                                                       000000
00101      7*     C   METHOD     COMPRESSOR IS SIZED FROM INPUT OPERATING REQUIREMENTS.    000000
00101      8*     C                                                                       000000
00101      9*     C              MASS FLOW IS ASSUMED PROPORTIONAL TO ANGULAR VELOCITY     000000
00101     10*     C                                                                       000000
00101     11*     C              AND INDEPENDENT OF PRESSURE RATIO.                        000000
00101     12*     C                                                                       000000
00101     13*     C   WRITTEN BY F.O. MAHONY                    VERSION 1, MARCH 22 1977  000000
00101     14*     C                                                                       000000
00101     15*     C   CALL SEQUENCE                                                       000000
00101     16*     C         OUTPUTS                                                       000000
00101     17*     C              NP   - POLYTROPIC EFFICIENCY                             000000
00101     18*     C              EF2  - OUTPUT PRODUCT EFFICIENCY                         000000
00101     19*     C              MP2  - MAXIMUM OUTPUT POWER, KW                          000000
00101     20*     C              TO   - TORQUE, FT-LB                                     000000
```

CO

```
00101   21*   C              M    - MASS FLOW RATE, LB/HR                                  000000
00101   22*   C              T2   - EXIT TEMPERATURE, DEG F                                000000
00101   23*   C              RS   - ANGULAR VELOCITY, RPM                                  000000
00101   24*   C              CC   - COST OF COMPRESSOR PER YEAR, $/YEAR                    000000
00101   25*   C              MT   - MAXIMUM TEMPERATURE OBSERVED, DEG F                    000000
00101   26*   C              MF   - MAXIMUM MASS FLOW RATE, LB/HR                          000000
00101   27*   C                                                                            000000
00101   28*   C         INPUTS                                                             000000
00101   29*   C              P1   - INPUT POWER, KW                                        000000
00101   30*   C              RSD  - DESIGN ANGULAR VELOCITY, RPM                           000000
00101   31*   C              MD   - DESIGN MASS FLOW RATE, LB/HR                           000000
00101   32*   C              CP   - HEAT CAPACITY OF AIR, KWH/LB-DEG F                     000000
00101   33*   C              TA   - INLET AIR TEMPERATURE (AMBIENT), DEG F                 000000
00101   34*   C              PR2  - EXIT PRESSURE, PSI                                     000000
00101   35*   C              PR1  - INLET PRESSURE (AMBIENT), PSI                          000000
00101   36*   C              GAM  - HEAT CAPACITY RATIO                                    000000
00101   37*   C              EF1  - INPUT PRODUCT EFFICIENCY                               000000
00101   38*   C              MP1  - INPUT MAXIMUM DISCHARGE POWER, KW                      000000
00101   39*   C              NPD  - DESIGN POLYTROPIC EFFICIENCY                           000000
00101   40*   C              PID  - DESIGN INLET PRESSURE (AMBIENT),PSI                    000000
00101   41*   C              POD  - DESIGN OUTLET PRESSURE (AMBIENT), PSI                  000000
00101   42*   C              TID  - DESIGN INLET TEMPERATURE (AMBIENT), DEG F              000000
00101   43*   C              CK   - COMPRESSOR CAPCITY COST COEFFICIENT                    000000
00101   44*   C              FO   - COMPRESSOR EXPONENT FOR COST CALCULATION               000000
00101   45*   C                                                                            000000
00103   46*         COMMON /CIMPL/ IMPL /CTIME/ TIME /CSIMUL/DUM(7),TMAX /COST/CCI         000000
00104   47*         REAL MD,MP1,NPD,NP,MP2,M,MT,MF                                         000000
00105   48*         DATA PI  /3.14159/                                                     000000
00105   49*   C                          INITIALIZATION                                   000000
00105   50*   C                                                                            000000
00107   51*         IF(IMPL.GT.0) GO TO 100                                                000000
00111   52*         MT = 0.0                                                               000002
00112   53*         MF = 0.0                                                               000003
00112   54*   C                                                                            000003
00113   55*         IF (RSD.EQ. .99999) RSD = 3600.0                                       000004
00115   56*         IF (MD .EQ. .99999)MD = 3.0E3                                          000011
00117   57*         IF(MP1.EQ. .99999) MP1= 1.E8                                           000016
00121   58*         IF (CP .EQ. .99999)CP = 72.0E-6                                        000023
00123   59*         IF (TA .EQ. .99999)TA = 70.0                                           000030
00125   60*         IF (PR2.EQ. .99999)PR2 = 147.0                                         000035
00127   61*         IF (PR1.EQ. .99999)PR1 = 14.7                                          000042
00131   62*         IF (GAM.EQ. .99999)GAM = 1.4                                           000047
00133   63*         IF (NPD.EQ. .99999)NPD = 0.88                                          000054
00135   64*         IF (PID.EQ. .99999)PID = 14.7                                          000061
00137   65*         IF (POD.EQ. .99999)POD = 147.0                                         000066
00141   66*         IF (TID.EQ. .99999)TID = 70.0                                          000073
00143   67*         IF (CK .EQ. .99999)CK = 1.0                                            000100
00145   68*         IF (FO .EQ. .99999)FO = 0.75                                           000105
00147   69*         NP = NPD                                                               000112
00147   70*   C                                                                            000112
00147   71*   C                          COST                                              000112
00147   72*   C                                                                            000112
00150   73*         CC = CK*MD**FO*ALOG(POD/PID)                                           000114
00151   74*         TMAX1 = TMAX*.99999                                                    000132
00152   75*     100 CONTINUE                                                               000136
00      76*   C                                                                            000136
00      77*   C                          SOLVE FOR POLYTROPIC EFFICIENCY                   000136
```

```
00152      78*      C                                AND ANGULAR VELOCITY                                    000136
00152      79*      C                                                                                        000136
00153      80*               ISP = 0                                                                         000136
00153      81*      C                                                                                        000136
00154      82*               EFF=1.0                                                                         000136
00155      83*               IF(P1.GT.0.0)GO TO 200                                                          000140
00155      84*      C                                                                                        000140
00157      85*               RAT= (POD/PID)**((GAM-1.0)/(GAM*NPD))                                           000143
00160      86*               TO =0.0                                                                         000160
00161      87*               RS=0.0                                                                          000161
00162      88*               NP=NPD                                                                          000162
00163      89*               GO TO 300                                                                       000164
00163      90*      C                                                                                        000164
00164      91*         200 A = (GAM-1.0)/(GAM*NP)                                                            000166
00165      92*               RAT= (PR2/PP1)**A                                                               000173
00166      93*               EFF=(RAT**NP - 1.)/(RAT - 1.)                                                   000203
00166      94*      C                                                                                        000203
00167      95*               RSNO = EFF*P1/MD*1.0/CP/(TA+460.0)/(RAT-1.0)                                    000214
00167      96*      C                                                                                        000214
00170      97*               XNP = NP                                                                        000224
00170      98*      C                                                                                        000224
00171      99*               NP = 1.0-(1.0-NPD)*(2.0-(PID/PR1*(TA+460.0)/(TID+460.0)/RSNO)                   000226
00171     100*              1                  **0.2)                                                         000226
00171     101*      C                                                                                        000226
00172     102*               IF(ISP.GT.10) GO TO 1000                                                        000250
00172     103*      C                                                                                        000250
00174     104*               ISP = ISP+1                                                                     000254
00174     105*      C                                                                                        000254
00175     106*               IF(ABS((NP-XNP)/NP).GT.0.001) GO TO 200                                         000257
00177     107*               RS= RSD*RSNO                                                                    000265
00177     108*      C                                                                                        000265
00177     109*      C                                MASS FLOW RATE                                          000265
00177     110*      C                                                                                        000265
00200     111*         300 M = MD*RS/RSD                                                                     000271
00200     112*      C                                                                                        000271
00200     113*      C                                EXIT TEMPERATURE                                        000271
00200     114*      C                                                                                        000271
00201     115*               T2 = (TA+460.0)*RAT-460.0                                                       000274
00202     116*               IF(P1.LE.0.0)GO TO 400                                                          000301
00202     117*      C                                                                                        000301
00202     118*      C                                TORQUE                                                  000301
00202     119*      C                                                                                        000301
00204     120*               TO = P1*737.6/(RS*2.0*PI/60.0)                                                  000304
00204     121*      C                                                                                        000304
00204     122*      C                                EFFICIENCY AND MAXIMUM POWER                            000304
00204     123*      C                                                                                        000304
00204     124*      C                                                                                        000304
00204     125*      C                                                                                        000304
00205     126*         400 EF2 = EF1*EFF                                                                     000315
00205     127*      C                                                                                        000315
00206     128*               MP2 = AMIN1(MP1*EFF,1.5*MD*CP*(T2-TA))                                          000317
00206     129*      C                                STATISTICS AND COST SUMMATION                           000317
00206     130*      C                                                                                        000317
00207     131*               IF (IMPL.LE.1) RETURN                                                           000334
00211     132*               MT = AMAX1(MT, T2)                                                              000343
00212     133*               MF = AMAX1(MF, M)                                                               000351
00213     134*               IF(TIME.LT.TMAX1) RETURN                                                        000357
```

```
00215     135*          CCI = CCI + CC                                          000366
00215     136*     C                                                            000366
00216     137*          RETURN                                                  000371
00216     138*     C                                                            000371
00217     139*      1000 WRITE (6,1010) NP,XNP,RS                               000375
00224     140*      1010 FORMAT (1H0,40HMAX ITERATIONS FOR COMPRESSOR EFFICIENCY,  000404
00224     141*          1            15H - NP,XNP,RS = ,3F12.6)                 000404
00225     142*          STOP                                                    000404
00226     143*          END                                                     000612
```

7.7 PNEUMATIC STORAGE VESSEL (CONSTANT PRESSURE)

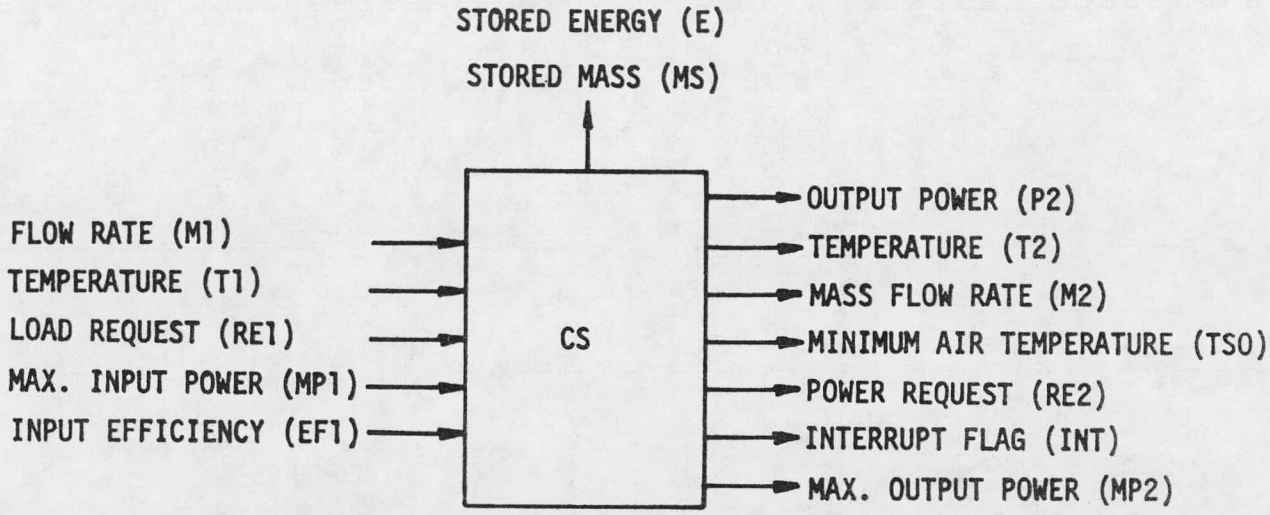

The pneumatic storage vessel is based on a constant pressure underground cavern design as represented in Figure 7.7. A surface pressure-compensation pond via a water shaft is assumed to maintain the vessel pressure at a constant value. This model is assumed to be used in conjunction with a heat exchanger. The energy is calculated as a function of the stored gas mass, the inlet/storage air temperature, and a leakage function proportional to the stored energy.

Basic Equation

The rate of energy storage is computed from the equation

$$\dot{E} = M1*CP*(T1-TO) - NU*E, \text{ charging}$$

$$\dot{E} = -M2*CP*(T2-TO) - NU*E, \text{ discharging}$$

where M1 = mass flow rate during charge

M2 = mass flow rate during discharge

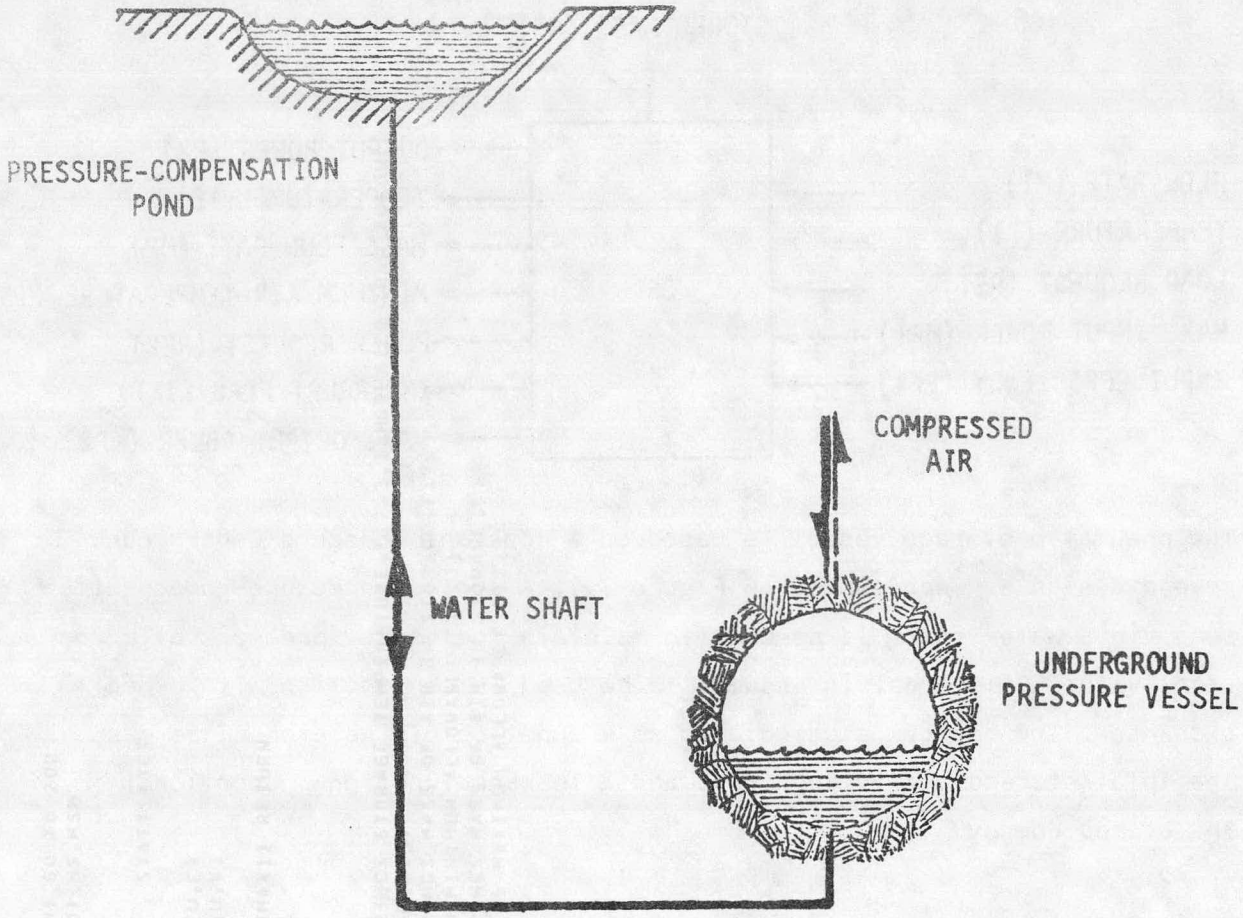

FIGURE 7.7 CONSTANT PRESSURE AIR STORAGE

Inputs

Parameter/Port		Description	Units
M	1	Inlet air mass flow rate	lb/h
CP		Air heat capacity (D = 7.2×10^{-5})	kwh/lb°F
T	1	Inlet air temperature	°F
TØ		Minimum air temperature (D = 60)	°F
NU		Leakage coefficient (D = 0.0008)	h^{-1}
R		Gas constant (D = 2.009×10^{-5})	kwh/lb
VM		Maximum storage capacity (D = 1.2×10^{6})	ft^3
PR	1	Vessel pressure (D = 147)	psi
LE		Life expectancy of vessel	years
CV		Vessel capacity cost (D = 0.22)	$/$ft^3$
RE	1	Load request	kw
EF	1	Input product efficiency	-
MP	1	Input maximum power	kw
MDE		Mass threshold for priority resequencing	lb
MD		Maximum charge or discharge mass flow rate	lb
TM		Maximum allowable air temperature (D = 120)	°F
TEM		Maximum allowable inlet temperature	°F
CM		Maintenance cost/year	$

Outputs

Variable/Port			
E		Stored energy (state)	kwh
M	2	Outlet mass flowrate	lb/hr
T	2	Storage temperature	°F
V		Storage volume	ft^3
CCØ		Cost of vessel/year	$
MS		Mass of air in storage (state)	lb
MP	2	Maximum output power	kw
RE	2	Maximum charging rate	kw
INT		Interrupt priority flag	-
TSØ		Minimum air temperature (=TO)	°F

D - Default values supplied

Outputs Cont.

Variable/Port			
PR	2	Vessel pressure (=PR1)	psi
P	2	Output power (discharge)	kw
MDM		Maximum allowable mass flow rate (=MD)	

Statistics

EU	Maximum stored energy	kwh
VU	Maximum storage volume	ft^3

The pneumatic storage vessel calculation sequence and default values assume a 10atm cavern approximately 340 ft. below ground and sized for storage of 120kw for 24 hours. A maximum cavern wall temperature of 120°F is assumed. Cost estimates for the vessel were estimated from the results of Reference 1, with cost scaling by .05 to account for plant size differences.

1. "Preliminary Feasibility Evaluation of Compressed Air Storage Power Systems," United Technologies AER 74-00242, December 1976.

Calculation Sequence

TINC = integration step size, hr

C1 = conversion constant = 5.43×10^{-5} $\frac{kwh/ft^3}{psi}$

1) Vessel Cost

CCØ = CV*VM/LE

2) Storage temperature

$$T2 = \frac{E}{CP*MS} + TØ$$

3) Storage volume

$$V = MS* \frac{R*(T2+460)}{PR1*C1}$$

4) Maximum Mass and charging rate

$$MSM = VM* \frac{(PR1*C1)}{R*(T2+460)}$$

MD1 = MIN(MDM,(MSM-MS)/TINC)

$$RE2 = \min \left\{ MP1,\ MD1*CP*(TEM-TØ) \right\} / EF1$$

5) Mass flow out (discharge mode)

$$M2 = \frac{RE1}{CP*(T2-TØ)}$$

P2 = RE1

6) Maximum discharge rate

MD = MIN(MDM,(MS-MDE)/TINC)

MP2 = CP*(T2-TØ)*MD

Calculation Sequence Cont.

7) Stored energy rate

$$\dot{E} = CP*(T1-T0)*M1 - NU*E - RE1$$

8) Stored mass rate

$$\dot{MS} = M1 - M2$$

9) Priority interrupt

If MS ≤ MDE, INT = 1

If MS > 2*MDE and INT = 1, INT = 0

If MS ≥ MSM, INT = -1

If MS < MSM-MDE and INT = -1, INT = 0

If T2>TM write diagnostic and set INT = -1

If MS < MDE or MS > MSM write diagnostic

10) Compute Statistics and Costs

```
SUBROUTINE CS        ENTRY POINT 000427

STORAGE USED  CODE(1) 000637; DATA(0) 000125; BLANK COMMON(2) 000000

 COMMON BLOCKS

 0003   CIMPL   000002
 0004   CTIME   000001
 0005   CSIMUL  000010
 0006   CGST    000002

EXTERNAL REFERENCES (BLOCK, NAME)

 0007   NWDU$
 0010   NIO2$
 0011   NERR3$

STORAGE ASSIGNMENT  (BLOCK, TYPE, RELATIVE LOCATION, NAME)

 0001   000326 10L       0001   000074 100L      0000   000004 1000F     0000   000021 1010F     0000   000036 1020F
 0001   000344 20L       0001   000362 200L      0006 R 000000 CCI       0006 R 000001 CMI       0000 R 000003 C1
 0005 R 000000 DUM       0003 I 000001 ICNT      0003 I 000000 IMPL      0000   000072 INJP$     0000 R 000001 MD1
 0000 R 000000 MSM       0004 R 000000 TIME      0005 R 000007 TMAX      0000 R 000002 TMAX1
```

```
00100      1*      CCS
00101      2*            SUBROUTINE CS( E,DE,IE,MS,DMS,IMS,M2,T2,V,CC,MP2,RE2,INT,TSO,PR2                  000000
00101      3*           1 ,P,MDM,EU,VU,M1,CP,T,TO,R,VM,PR1,LE,NU,CV,RE1,EF1,MP1,MDE,MD,TM                 000000
00101      4*           2 ,TEM,CM)                                                                        000000
00101      5*      C                                                                                      000000
00101      6*      C   PURPOSE     PERFORMANCE MODEL OF CONSTANT PRESSURE STORAGE VESSEL                  000000
00101      7*      C                                                                                      000000
00101      8*      C   METHOD      ENERGY IN STORAGE COMPUTED AS A FUNCTION MASS AND                      000000
00101      9*      C                                                                                      000000
00101     10*      C               INLET TEMPERATURE.                                                     000000
00101     11*      C                                                                                      000000
00101     12*      C   WRITTEN BY F.O. MAHONY                    VERSION 1, MARCH 23 1977                 000000
00101     13*      C                                                                                      000000
00101     14*      C  CALL SEQUENCE                                                                       000000
00101     15*      C                                                                                      000000
00101     16*      C          OUTPUTS                                                                     000000
00101     17*      C               E   - STORED ENERGY (STATE VARIABLE), KWH                              000000
00101     18*      C               DE  - STORED ENERGY DERIVATIVE, KW                                     000000
00101     19*      C               IE  - STATUS INDICATOR FOR E                                           000000
00101     20*      C               MS  - MASS OF AIR IN STORAGE (STATE VARIABLE), LB                      000000
00101     21*      C               DMS - AIR FLOW RATE, LB/HR                                             000000
00101     22*      C               IMS - STATUS INDICATOR FOR MS                                          000000
00101     23*      C               M2  - OUTLET MASS FLOWRATE, LB/HR                                      000000
```

CS

```
00101      C          T2  - STORAGE TEMPERATURE, DEG F                          000000
00101      C          V   - STORAGE VOLUME, FT**3                               000000
00101      C          CC  - COST OF VESSEL/YEAR, $                              000000
00101      C          MP2 - MAXIMUM OUTPUT POWER, KW                            000000
00101      C          RE2 - MAXIMUM CHARGING RATE, KW                           000000
00101      C          INT - INTERRUPT PRIORITY FLAG                             000000
00101      C          TSO - MINIMUM AIR TEMPERATURE, DEG F                      000000
00101      C          PR2 - VESSEL PRESSURE, PSI                                000000
00101      C          P   - OUTPUT POWER (DISCHARGE), KW                        000000
00101      C          MDM - MAXIMUM ALLOWABLE MASS FLOW RATE, LB/HR             000000
00101      C          EU  - MAXIMUM STORED ENERGY, KWH                          000000
00101      C          VU  - MAXIMUM STORAGE VOLUME, FT**3                       000000
00101      C                                                                    000000
00101      C       INPUTS                                                       000000
00101      C          M1  - INLET AIR MASS FLOW RATE, LB/HR                     000000
00101      C          CP  - AIR HEAT CAPACITY, KWH/LB-DEG F                     000000
00101      C          T   - INLET AIR TEMPERATURE, DEG F                        000000
00101      C          TO  - MINIMUM AIR TEMPERATURE, DEG F                      000000
00101      C          R   - GAS CONSTANT, KWH/LB-DEG R                          000000
00101      C          VM  - MAXIMUM STORAGE CAPACITY, FT**3                     000000
00101      C          PR1 - VESSEL PRESSURE, PSI                                000000
00101      C          LE  - LIFE EXPECTANCY OF VESSEL, YEARS                    000000
00101      C          NU  - LEAKAGE COEFFICIENT . , 1/HR                        000000
00101      C          CV  - VESSEL CAPACITY COST  , $/FT**3                     000000
00101      C          RE1 - LOAD REQUEST, KW                                    000000
00101      C          EF1 - INPUT PRODUCT EFFICIENCY                            000000
00101      C          MP1 - INPUT MAXIMUM POWER, KW                             000000
00101      C          MDE - RESERVOIR THRESHOLD MASS FOR PRIORITY               000000
00101      C                RESEQUENCING, LB                                    000000
00101      C          MD  - MAXIMUM CHARGE / DISCHARGE MASS FLOW RATE, LB/HR    000000
00101      C          TM  - MAXIMUM ALLOWABLE STORAGE TEMPERATURE, DEG F        000000
00101      C          TEM - MAXIMUM ALLOWABLE INLET TEMPERATURE, DEG F          000000
00101      C          CM  - MAINTENANCE COST / YEAR , $                         000000
00101      C                                                                    000000
00101      C                                                                    000000
00103            COMMON /CIMPL/IMPL,ICNT/CTIME/ TIME /CSIMUL/DUM(7),TMAX       000000
00104            COMMON /COST/ CCI,CMI                                         000000
00105            REAL NU,MS,MP2,INT,MDM,M1,LE,MP1,MDE,MD,M2,MSM,MD1            000000
00105      C                                                                    000000
00105      C                                                                    000000
00106            IF(IMPL.GT.0) GO TO 100                                       000000
00106      C                                                                    000000
00110            IF(CP .EQ. .99999) CP = 72.0E-6                               000002
00112            IF(TM .EQ. .99999) TM= 120.0                                  000007
00114            IF(TO .EQ. .99999) TO = 60.0                                  000014
00116            IF(NU .EQ. .99999) NU = 0.0008                                000021
00120            IF(R  .EQ. .99999) R  = 2.009E-5                              000026
00122            IF(VM .EQ. .99999) VM = 1.2E+6                                000033
00124            IF(PR1.EQ. .99999) PR1 = 147.0                                000040
00126            IF(CV .EQ. .99999) CV  = 0.22                                 000045
00130            RE1=0.0                                                       000052
00130      C                                                                    000052
00131            TMAX1 = TMAX*0.99999                                          000053
00132            TSO=TO                                                        000056
00132      C                                                                    000056
00133            CC = CV*VM/LE                                                 000060
00134            C1 = 5.43E-5                                                  000064
```

```
00134      81*      C                                                                    000064
00135      82*               INT = 0.                                                    000066
00136      83*               PR2=PR1                                                     000067
00137      84*               EU= 0.                                                      000071
00140      85*               VU= 0.                                                      000072
00141      86*          100  CONTINUE                                                    000074
00141      87*      C                                                                    000074
00141      88*      C                                                                    000074
00141      89*      C                                                                    000074
00141      90*      C                         STORAGE TEMPERATURE                        000074
00141      91*      C                                                                    000074
00142      92*               T2 = E/CP/MS+TO                                             000074
00142      93*      C                                                                    000074
00142      94*      C                         STORAGE VOLUME                             000074
00142      95*      C                                                                    000074
00143      96*               V = MS*R*(T2+460.0)/PR1/C1                                  000100
00143      97*      C                                                                    000100
00143      98*      C                         MAXIMUM MASS AND  CHARGING RATE            000100
00143      99*      C                                                                    000100
00144     100*               MSM = VM*PR1*C1/R/(T2+460.0)                                000110
00145     101*               MDM=MD                                                      000116
00146     102*               MD1= AMIN1(MDM,AMAX1(0.,(MSM-MS)/DUM(7)))                   000120
00147     103*               RE2 = AMIN1(MP1,MD1*CP*(TEM-TO))/EF1                        000133
00147     104*      C                                                                    000133
00147     105*      C                         MASS FLOW OUT (DISCHARGE)                  000133
00147     106*      C                                                                    000133
00150     107*               M2 = RE1/CP/(T2-TO)                                         000145
00151     108*               P = RE1                                                     000153
00151     109*      C                                                                    000153
00151     110*      C                         MAXIMUM DISCHARGE RATE                     000153
00151     111*      C                                                                    000153
00152     112*               MDM= AMIN1(MDM,AMAX1(0.,(MS-MDE)/DUM(7)))                   000155
00153     113*               MP2 = CP*(T2-TO)*MDM                                        000171
00153     114*      C                                                                    000171
00153     115*      C                         STORED ENERGY RATE                         000171
00153     116*      C                                                                    000171
00154     117*               IF(IE.NE.0) DE=CP*(T-TO)*M1 - NU*E -RE1                     000174
00154     118*      C                                                                    000174
00154     119*      C                         STORED MASS RATE                           000174
00154     120*      C                                                                    000174
00156     121*               IF(IMS.NE.0) DMS=M1-M2                                      000207
00156     122*      C                                                                    000207
00156     123*      C                                   PRIORITY INTERRUPT LOGIC         000207
00160     124*               IF(MS .LE. MDE) INT=1.                                      000214
00162     125*               IF(MS.GT. 2.*MDE .AND. INT.EQ.1.) INT=0.                    000222
00164     126*               IF(MS .GE.MSM) INT = -1.                                    000241
00166     127*               IF(MS.LT. MSM-MDE .AND. INT.EQ.-1.) INT=0.                  000247
00170     128*               IF(T2 .GT. TM) INT= -1.                                     000266
00170     129*      C                                                                    000266
00172     130*               IF(IMPL.LE.1) RETURN                                        000274
00174     131*               IF(IMPL.GT.2)GO TO 200                                      000303
00176     132*               IF(T2.LT.TM) GO TO 10                                       000307
00200     133*               WRITE(6,1000) T2,TM                                         000313
00204     134*               ICNT=ICNT+1                                                 000322
00205     135*            10 IF(MS.GT.MDE) GO TO 20                                      000326
00207     136*               WRITE(6,1010)MS,MDE                                         000331
00213     137*               ICNT=ICNT+1                                                 000340
```

```
00214     138*        20 IF(MS.LT.MSM) GO TO 200                                    000344
00216     139*           WRITE(6,1020) MS,MSM                                       000347
00222     140*           ICNT=ICNT+1                                                000356
00222     141*     C                                                                C00356
00222     142*     C                    STATISTICS                                  000356
00222     143*     C                                                                000356
00223     144*       200 EU = AMAX1(EU,E)                                           000362
00224     145*           VU = AMAX1(VU,V)                                           000367
00224     146*     C                                                                C00367
00225     147*           IF(TIME.LT.TMAX1) RETURN                                   000375
00227     148*           CCI = CCI+CC                                               C00404
00230     149*           CMI=CMI+CM                                                 000407
00230     150*     C                                                                C00407
00231     151*           RETURN                                                     000412
00232     152*      1000 FORMAT(1H0,23HCS STORAGE TEMPERATURE,F12.3,18HGREATER THAN ALLOW,  000636
00232     153*          1 5HABLE ,   F12.3)                                         000636
00233     154*      1010 FORMAT(1H0,25HCS MASS OF AIR IN STORAGE,F12.3,             000636
00233     155*          1 26H   BELOW MINIMUM ALLOWABLE,F12.3)                      000636
00234     156*      1020 FORMAT(1H0,25HCS MASS OF AIR IN STORAGE,F12.3,             000636
00234     157*          1 28H   EXCEEDS MAXIMUM ALLOWABLE,F12.3)                    000636
00235     158*           END                                                        000636
```

7.8 FLYWHEEL/CLUTCH

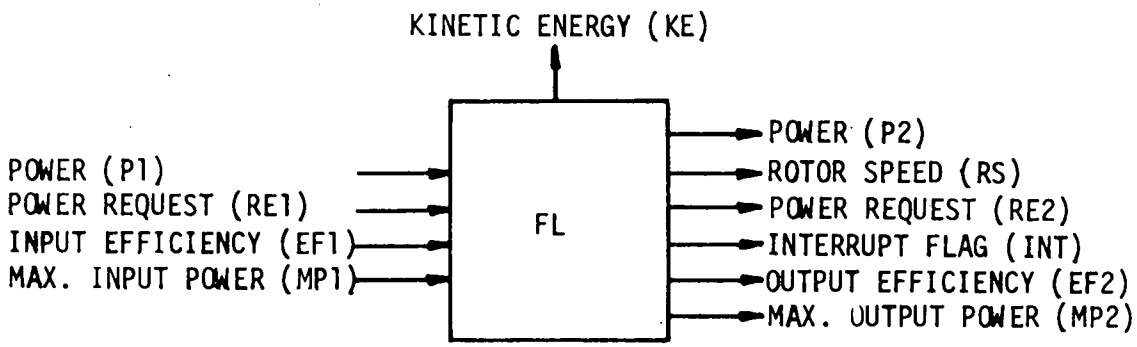

The flywheel model is a first order differential equation for kinetic energy which is driven by input power when charging and by a load request when discharging. Power losses include clutch losses versus shaft speed and torque, windage losses, and friction losses due to bearing and seals. Shaft speed is determined analytically from kinetic energy. Priority interrupt logic is activated if minimum or maximum capacity levels are reached.

<u>Basic Equations</u>

$$KE = k * \omega^2$$

$$\dot{KE} = P_{IN} - P_{OUT} - C_1 * \omega - C_2 * \omega^{2.8},$$

where k, C_1, C_2 are flywheel constants

ω = rotor speed in rad/sec

P_{IN} = input power - clutch losses

P_{OUT} = output load request

Tables		Description	Units
CLØ		Clutch losses versus rotor speed (rpm) and torque (ft-lb), when engaged (Table dimension = 90)	kw
CL1		Clutch losses versus rotor speed (rpm) when disengaged (Table dimension = 17)	kw

Inputs

Parameter/Port			
PR		Pressure in vacuum housing	psi
HM		Moment of inertia[1]	slug-ft^2
RF		Radius of flywheel	ft
SR		Shaft radius	ft
WT		Flywheel weight	lb
KF		Coefficient of friction	-
ZE		Width of flywheel at tip	ft
C2		Windage loss coefficient (analytic default)	-
P	1	Input power	kw
EF	1	Input product efficiency	-
MP	1	Input maximum charging rate	kw
RAP		Rated power, charge or discharge	kw
RE	1	Discharge load request	kw
EØ		Minimum allowable storage capacity	kwh
E1		Maximum allowable storage capacity	kwh
EDE		Energy deadband for priority resequencing	kwh
CM		Maintenance cost/year	$
CC		Capital cost/year	$

Outputs

Variable/Port		
RS	Rotor speed	rpm
KE	Kinetic energy (state)	kwh

[1] Includes physical drive system.

Outputs Cont.

Variable/Port		Description	Units
TØ		Input torque (charging)	ft-lb
T1		Output torque (discharging)	ft-lb
P	2	Output power	kw
PLØ		Clutch losses (charging)	kw
PL1		Clutch losses (discharging)	kw
EF	2	Output efficiency	–
MP	2	Maximum output power	kw
INT		Priority interrupt flag	–
RE	2	Maximum charging power request	kw

Statistics

ME		Maximum stored energy	kwh
MPC		Maximum charge rate	kw
MPD		Maximum discharge rate	kw
SPC		Sum of charging energy	kwh
SPD		Sum of discharging energy	kwh

Calculation Sequence

1) Compute flywheel constants

$$k = \frac{1}{2} * HW * / 3.76616 * 10^{-7}$$

$$C_1 = KF * WT * SR * / 1.3558 * 10^{-3}$$

$$C_2 = C_o * PR^{0.8} * RF^{4.6} * (1 + 2.3 * ZE/RF) \quad \text{(DEFAULT)}$$

$$C_o = 1.0946 * 10^{-7}$$

If KE < E0 or KE > E1 write diagnostic

2) Compute rotor speed

$$\omega = \sqrt{KE/k}$$

$$RS = \omega * (60/2\pi)$$

$$P_{IN} = 0$$

3) Compute power losses and net power when charging

If P1 = 0, set TØ = PLØ = P_{IN} = 0 and go to 4)

$$TO = P1 * 737.6/\omega$$

$$PLO = CLØ(RS, TØ)$$

$$P_{IN} = P1 - PLØ$$

If $P_{IN} < 0$, write diagnostic

4) Compute power losses and output power when discharging

If RE1 = 0, set T1 = PL1 = P2 = P_{OUT} = 0 and go to 5)

$$T1 = RE1 * 737.6/\omega$$

$$PL1 = CLØ(RS, -T1)$$

Calculation Sequence

4) Cont.

$$P2 = RE1 - PL1$$

$$P_{OUT} = RE1$$

If P2 < 0, set P2 = 0. and write diagnostic

5) Compute power losses when disengaged

If P1 > 0 or RE1 > 0, go to 6)

$$P_{OUT} = CL1(RS)$$

6) Flywheel kinetic energy rate

$$\dot{KE} = P_{IN} - P_{OUT} - C_1 * \omega - C_2 * \omega^{2.8}$$

7) Maximum Input (charging power)

$$TM = MP1*737.6/\omega$$

$$MP\emptyset = MP1 - CL\emptyset(RS,TM)$$

If MPØ ≤ 0, write diagnostic and go to 8)

$$EF\emptyset = EF1*MP\emptyset/MP1$$

$$RE2 = MIN(MP\emptyset,RAP),(EI-KE)/TINC)/EF\emptyset$$

8) Output efficiency and maximum power

RAP1 = MIN(RAP,(KE-EØ)/TINC), TINC = integration step

$$TM = RAP1*737.6/\omega$$

$$MP2 = RAP1 - CL\emptyset(RS,-TM)$$

Calculation Sequence

8) Cont.

If MP2 < 0 write diagnostic

EF2 = MP2/RAP1

If RE1 > 0, EF2 = P2/RE1

9) Priority interrupt logic

If KE ≤ EØ , INT = 1

If KE > EØ + EDE and INT=1, INT=0

If KE ≥ E1 , INT = -1

If KE < E1 - EDE and INT= -1, INT=0

10) Compute Statistics and Costs

```
SUBROUTINE FL          ENTRY POINT 001125

STORAGE USED  CODE(1) 001333; DATA(0) 000231; BLANK COMMON(2) 000000

 COMMON BLOCKS

 0003   CIMPL  000002
 0004   CTIME  000001
 0005   CSIMUL 000010
 0006   COST   000002

EXTERNAL REFERENCES (BLOCK, NAME)

 0007   TBLU2
 0010   TBLU1
 0011   XPRR
 0012   NWDU$
 0013   NIO2$
 0014   SQRT
 0015   NERR3$

STORAGE ASSIGNMENT  (BLOCK, TYPE, RELATIVE LOCATION, NAME)

 0001   000060 10L       0000   000042 108F      0000   000026 109F      0001   000147 20L       0001   000315 200L
 0000   000060 208F      0001   000412 300L      0000   000074 308F      0001   000440 400L      0001   000544 500L
 0000   000110 508F      0001   000578 600L      0001   000705 700L      0000   000125 708F      0000 R 000005 AK
 0000 R 000022 APC       0006 R 000000 CCI       0006 R 000001 CMI       0000 R 000006 C1        0005 R 000000 DUM
 0000 R 000025 EC0       0000 R 000024 EC1       0000 R 000021 EF0       0003 I 000001 ICNT      0003 I 000000 IMPL
 0000   000166 INJP$     0000 I 000012 MN4       0000 R 000001 MPA       0000 R 000002 MPB       0000 R 000000 MPO
 0000 I 000011 M4        0000 I 000013 NNNRS     0000 I 000014 NNNRS4    0000 I 000007 NNRS      0000 I 000010 NNT
 0000 R 000015 OMEGA     0000 R 000016 PIN       0000 R 000017 POUT      0000 R 000023 RAPT      0010 R 000000 TBLU1
 0007 R 000000 TBLU2     0004 R 000000 TIME      0000 R 000003 TINC      0000 R 000020 TM        0005 R 000007 TMAX
 0000 R 000004 TMAX1
```

```
00100      1*     CFL                                                                    000007
00101      2*            SUBROUTINE FL(CL0,CL1,RS,KE,KED,IKE,T0,T1,P2,PL0,PL1,EF2,MP2,INT,  000007
00101      3*          1   RE2,ME,MPC,MPD,SPC,SPD,  PR,HM,RF,SR,WT,KF,ZE,C2,P1,EF1,MP1,RAP  000007
00101      4*          2   ,RE1,E0,E1,EDE,CM,CC)                                            000007
00101      5*     C                                                                        000007
00101      6*     C              PURPOSE    MODEL OF FLYWHEEL CAPABLE OF ABSORBING POWER   000007
00101      7*     C                         AND OF DELIVERING POWER ON REQUEST             000007
00101      8*     C                                                                        000007
00101      9*     C              METHOD     OUTPUT POWER AND KINETIC ENERGY COMPUTED FROM  000007
00103     10*                                                                              000007
00103     11*     C                         POWER REQUEST AND INPUT POWER                  000007
00103     12*     C                                                                        000007
00103     13*                                                                              000007
```

```
00103   14*
00103   15*   C              WRITTEN BY Y.K.CHAN          VERSION 1, JUNE 17, 1977                    000007
00103   16*   C                                                                                       000007
00103   17*   C  CALL SEQUENCE                                                                        000007
00103   18*   C        TABLES                                                                         000007
00103   19*   C             CLO -CLUTCH LOSSES VS ROTOR SPEED(RPM) AND TORQUE(FT-LB),KW               000007
00103   20*   C             CL1 -CLUTCH LOSSES VS ROTOR SPEED(RPM) WHEN DISENGAGED,KW                 000007
00103   21*   C        OUTPUTS                                                                        000007
00103   22*   C             RS  -ROTOR SPEED, RPM                                                     000007
00103   23*   C             KE  -KINETIC ENERGY(STATE),KWH                                            000007
00103   24*   C             KED -KINETIC ENERGY INCREASE RATE,KW                                      000007
00103   25*   C             IKE -INTEGRATOR CONTROL                                                   000007
00103   26*   C             TO  -INPUT TORQUE (CHARGING), FT-LB                                       000007
00103   27*   C             T1  -OUTPUT TORQUE (DISCHARGING),FT-LB                                    000007
00103   28*   C             P2  -OUTPUT POWER,KW                                                      000007
00103   29*   C             PLO -CLUTCH LOSSES (CHARGING),KW                                          000007
00103   30*   C             PL1 -CLUTCH LOSSES (DISCHARGING),KW                                       000007
00103   31*   C             EF2 -OUTPUT EFFICIENCY                                                    000007
00103   32*   C             MP2 -MAXIMUM OUTPUT POWER,KW                                              000007
00103   33*   C             INT -PRIORITY INTERRUPT FLAG                                              000007
00103   34*   C             RE2 -MAXIMUM CHARGING POWER REQUEST                                       000007
00103   35*   C        STATISTICS                                                                     000007
00103   36*   C             ME  MAXIMUM STORED ENERGY,KWH                                             000007
00103   37*   C             MPC -MAXIMUM CHARGE RATE,KW                                               000007
00103   38*   C             MPD -MAXIMUM DISCHARGE RATE,KW                                            000007
00103   39*   C             SPC -SUM OF CHARGING POWER,KWH                                            000007
00103   40*   C             SPD -SUM OF DISCHARGING POWER,KWH                                         000007
00103   41*   C        INPUTS                                                                         000007
00103   42*   C             PR  -PRESSURE IN VACUUM HOUSING,PSI                                       000007
00103   43*   C             HM  -MOMENT OF INERTIA,SLUG-FT2                                           000007
00103   44*   C             RF  -RADIUS OF FLYWHEEL,FT                                                000007
00103   45*   C             SR  -SHAFT RADIUS,FT                                                      000007
00103   46*   C             WT  -FLYWHEEL WEIGHT,LB                                                   000007
00103   47*   C             KF  -COEFFICIENT OF FRICTION                                              000007
00103   48*   C             ZE  -WIDTH OF FLYWHEEL AT TIP,FT                                          000007
00103   49*   C             C2  -WINDAGE COEFFICIENT (ANALYTIC DEFAULT)                               000007
00103   50*   C             P1  -INPUT POWER,KW                                                       000007
00103   51*   C             EF1 -INPUT PRODUCT EFFICIENCY                                             000007
00103   52*   C             MP1 -INPUT MAXIMUM.CHARGING RATE,KW                                       000007
00103   53*   C             RAP -RATED POWER, CHARGE OR DISCHARGE,KW                                  000007
00103   54*   C             RE1 -DISCHARGE LOAD REQUEST,KW                                            000007
00103   55*   C             EO  -MINIMUM ALLOWABLE STORAGE CAPACITY,KWH                               000007
00103   56*   C             E1  -MAXIMUM ALLOWABLE STORAGE CAPACITY,KWH                               000007
00103   57*   C             EDE -ENERGY DEADBAND FOR PRIORITY RESQUENCING,KWH                         000007
00103   58*   C             CM  -MAINTENANCE COST/YEAR,$                                              000007
00103   59*   C             CC  -CAPITAL COST/YEAR,$                                                  000007
00103   60*   C                                                                                       000007
00103   61*         COMMON /CIMPL/IMPL,ICNT/CTIME/TIME/CSIMUL/DUM(7),TMAX                             000007
00103   62*        X       /COST/CCI,CMI                                                              000007
00104   63*         REAL KE,KED,MP2,INT,ME,MPC,MPD,KF,MP1,MPO,MPA,MPB                                 000007
00105   64*         DIMENSION CLO(1),CL1(1)                                                           000007
00105   65*   C                                                                                       000007
00106   66*         IF(IMPL.GT.0)GO TO 10                                                             000007
00110   67*         TINC=DUM(7)*.5                                                                    000007
00111   68*         IF(C2.EQ..99999)C2=(1.0946E-7)*(PR**.8)*(RF**4.6+2.3*ZE*(RF**3.6))                000012
00113   69*         INT=0.                                                                            000015
00114   70*         TMAX1=TMAX*.99999                                                                 000045
                                                                                                      000046
```

```
00114      71*      C                                                                  000046
00115      72*            MF=0.                                                        000051
00116      73*            RE1=0.                                                       000052
00117      74*            MPC=0.                                                       000053
00120      75*            MPD=0.                                                       000054
00121      76*            SPC=0.                                                       000055
00122      77*            SPD=0.                                                       000056
00123      78*         10 CONTINUE                                                     000060
00124      79*            AK=.5*HM*3.76616E-7                                          000060
00125      80*            C1=KF*WT*SR*1.3558E-3                                        000063
00126      81*            IF(((KE.GT.E0).AND.(KE.LT.E1)).OR.(IMPL.NE.2))GO TO 20       000070
00130      82*            IF(KE.LE.E0)WRITE(6,108)KE,E0                                000115
00135      83*            IF(KE.GE.E1)WRITE(6,109)KE,E1                                000130
00142      84*        109 FORMAT(1H0,26H FLYWHEEL KINETIC ENERGY ,F12.3,               000143
00142      85*           X 18H EXCEEDS CAPACITY ,F12.3)                                000143
00143      86*        108 FORMAT(1H0,24H FLYWHEEL KINETIC ENERGY,F12.3,                000143
00143      87*           X 33H FALLS BELOW MINIMUM REQUIREMENT ,F12.3)                 000143
00144      88*            ICNT=ICNT+1                                                  000143
00145      89*         20 CONTINUE                                                     000147
00146      90*            NNRS=CL0(2)                                                  000147
00147      91*            NNT=CL0(3)                                                   000155
00150      92*            M4=NNT+4                                                     000164
00151      93*            MN4=M4+NNRS                                                  000166
00152      94*            NNNRS=CL1(2)                                                 000170
00153      95*            NNNRS4=NNNRS+4                                               000177
00154      96*            T0=0.                                                        000201
00155      97*            T1=0.                                                        000202
00156      98*            P2=0.                                                        000203
00157      99*            PL0=0.                                                       000204
00160     100*            PL1=0.                                                       000205
00161     101*            RE2=0.                                                       000206
00161     102*      C                                                                  000206
00161     103*      C                COMPUTE ROTOR SPEED                               000206
00161     104*      C                                                                  000206
00162     105*        100 OMEGA=1.E-6                                                  000207
00163     106*            IF(KE.GT.0.)OMEGA=SQRT(KE/AK)                                000211
00165     107*            RS= OMEGA*30./3.14159                                        000223
00166     108*            PIN=0.                                                       000227
00166     109*      C                                                                  000227
00166     110*      C                COMPUTE POWER LOSSES AND NET POWER WHEN CHARGING  000227
00166     111*      C                                                                  000227
00167     112*            IF(P1.EQ.0.)GO TO 200                                        000230
00171     113*            T0=P1*737.6/OMEGA                                            000236
00172     114*            PL0=TBLU2(RS,T0,CL0(M4),CL0(4),CL0(MN4),1,1,-NNRS,-NNT,NNRS,NNT)  000242
00173     115*            PIN=P1-PL0                                                   000272
00174     116*            POUT=0.                                                      000274
00174     117*      C                                                                  000274
00175     118*            IF(PIN.GE.0.)GO TO 200                                       000275
00177     119*            IF(IMPL.NE.2)GO TO 200                                       000277
00201     120*            WRITE(6,208)PL0,P1                                           000302
00205     121*        208 FORMAT(1H0,21H FLYWHEEL POWER LOSS ,F12.3,                   000311
00205     122*           X24H EXCEEDS CHARGING POWER ,F12.3)                           000311
00206     123*            ICNT=ICNT+1                                                  000311
00206     124*      C                                                                  000311
00206     125*      C                COMPUTE POWER LOSSES AND OUTPUT POWER WHEN DISCHARGING  000311
00206     126*      C                                                                  000311
00207     127*        200 IF(RE1.EQ.0.)GO TO 300                                       000315
```

```
00211   128*          T1=RE1*737.6/OMEGA                                          000316
00212   129*        PL1=TBLU2(RS,-T1,CLO(M4),CLO(4),CLO(MN4),1,1,-NNRS,-NNT,NNRS,NNT)  000322
00213   130*        P2=RE1-PL1                                                  000357
00214   131*        POUT=RE1                                                    000361
00215   132*        IF(P2.GT.0..OR.IMPL.NE.2)GO TO 300                          000363
00217   133*         WRITE(6,308)PL1,RE1                                        000376
00223   134*    308 FORMAT(1H0,16H  FLYWHEEL LOSS ,F12.3,                       000405
00223   135*       X27H EXCEEDS DISCHARGING POWER ,F12.3)                       000405
00224   136*        ICNT=ICNT+1                                                 000405
00225   137*        P2=0.                                                       000410
00225   138*  C                                                                 000410
00225   139*  C              COMPUTE POWER LOSSES WHEN DISENGAGED               000410
00225   140*  C                                                                 000410
00226   141*                                                                    000412
00226   142*                                                                    000412
00226   143*    300 IF(P1.GT.0.)GO TO 400                                       000412
00230   144*        IF(RE1.GT.0.)GO TO 400                                      000414
00232   145*        POUT=TBLU1(RS,CL1(4),CL1(NNNRS4),1,-NNNRS)                  000421
00232   146*  C                                                                 000421
00232   147*  C              FLYWHEEL KINETIC ENERGY BALANCE                    000421
00232   148*  C                                                                 000421
00233   149*    400 IF(IKE.NE.0)KED=PIN-POUT-C1*OMEGA-C2*(OMEGA**2.8)           000440
00233   150*  C                                                                 000440
00233   151*  C              MAXIMUM CHARGING POWER REQUEST                     000440
00233   152*  C                                                                 000440
00235   153*        TM=MP1*737.6/OMEGA                                          000456
00236   154*        MPA=TBLU2(RS,TM,CLO(M4),CLO(4),CLO(MN4),1,1,-NNRS,-NNT,     000462
00236   155*       X    NNRS,NNT)                                               000462
00237   156*        MPO=MP1-MPA                                                 000516
00240   157*        IF(MPO.GT.0.)GO TO 500                                      000520
00242   158*        IF(IMPL.EQ.2)WRITE(6,508)MPA,MP1                            000522
00247   159*    508 FORMAT(1H0,22H FLYWHEEL CLUTCH LOSS  ,F12.3,                000534
00247   160*       X 31H EXCEEDS MAXIMUM INPUT POWER  ,F12.3)                   000534
00250   161*        IF(IMPL.EQ.2)ICNT=ICNT+1                                    000534
00252   162*        GO TO 600                                                   000542
00253   163*    500 EFO=EF1*MPO/MP1                                             000544
00254   164*         APC= AMAX1(0.,(E1-KE)/DUM(7))                              000547
00255   165*        RE2=AMIN1(MPO,RAP,APC)                                      000557
00256   166*        RE2=RE2/EFO                                                 000571
00256   167*  C                                                                 000571
00256   168*  C              OUTPUT EFFICIENCY AND MAXIMUM POWER                000571
00256   169*  C                                                                 000571
00257   170*    600 RAPT=(KE-E0)/(TINC*2.)                                      000574
00260   171*        RAPT=AMIN1(RAPT,RAP)                                        000601
00261   172*        RAPT=AMAX1(RAPT,RAP/1000.)                                  000606
00262   173*        TM=RAPT*737.6/OMEGA                                         000615
00263   174*        MPB=TBLU2(RS,-TM,CLO(M4),CLO(4),CLO(MN4),1,1,-NNRS,-NNT,    000620
00263   175*       X   NNRS,NNT)                                                000620
00264   176*        MP2=RAPT-MPB                                                000655
00265   177*        IF(MP2.GT.0..OR.IMPL.NE.2)GO TO 700                         000657
00267   178*    708 FORMAT(1H0,22H FLYWHEEL CLUTCH LOSS ,F12.3,                 000672
00267   179*       X27H EXCEEDS DELIVERABLE POWER  ,F12.3)                      000672
00270   180*        WRITE(6,708)MPB,RAPT                                        000672
00274   181*        ICNT=ICNT+1                                                 000701
00275   182*    700 MP2=AMAX1(MP2,RAP/1000.)                                    000705
00276   183*        EF2=MP2/RAPT                                                000713
002     184*        IF(RE1.GT.0..AND.P2.GT.0.)EF2=P2/RE1                        000715
```

```
00277     185*     C                                                    000715
00277     186*     C                PRIORITY INTERRUPT                  000715
00277     187*     C                                                    000715
00301     188*          EC1=E1-EDE                                      000734
00302     189*          ECO=EO+EDE                                      000737
00303     190*          IF((KE.GT.ECO).AND.(INT.EQ.1.))INT=0.           000742
00305     191*          IF((KE.LT.EC1).AND.(INT.EQ.-1.))INT=0.          000760
00307     192*                                                          000776
00307     193*          IF(KE.LE.EO)INT=1.                              000776
00311     194*          IF(KE.GT.E1)INT=-1.                             001004
00313     195*          IF((KE.GT.ECO).AND.(KE.LT.EC1))INT=0.           001012
00315     196*          IF(IMPL.LE.1)RETURN                             001031
00315     197*     C                                                    001031
00315     198*     C                STATISTICS                          001031
00315     199*     C                                                    001031
00317     200*          ME=AMAX1(ME,KE)                                 001040
00320     201*          MPC=AMAX1(MPC,KED)                              001046
00321     202*          MPD=AMAX1(MPD,-KED)                             001054
00322     203*          SPC=SPC+TINC*P1                                 001062
00323     204*          SPD=SPD+TINC*P2                                 001066
00323     205*     C                                                    001066
00324     206*          IF(TIME.LT.TMAX1)RETURN                         001072
00326     207*          CCI=CCI+CC                                      001101
00327     208*          CMI=CMI+CM                                      001104
00327     209*     C                                                    001104
00330     210*                                                          001107
00330     211*          RETURN                                          001107
00331     212*          END                                             001332
```

7.9 ONE DIMENSION TABLE LOOKUP

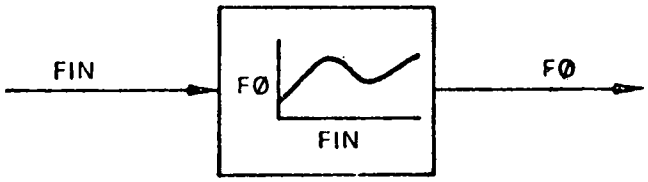

Tables	Description
FTA	Tabular values of function

Inputs

Parameter/Port	
FIN	Input quantity
AN	ABS(AN) $\leq$ 0.5 for equispaced interpolation (AN < 0 prevents extrapolation)

Outputs

Variable/Port	
FØ	Output quantity

Calculation Sequence

FØ = FTA(FIN)

NOTE: A maximum of 18 points is allowed in the table.

```
SUBROUTINE FU        ENTRY POINT 000065

STORAGE USED  CODE(1) 000075; DATA(0) 000014; BLANK COMMON(2) 000000

EXTERNAL REFERENCES (BLOCK, NAME)

 0003   TBLU1
 0004   NERR3$

STORAGE ASSIGNMENT  (BLOCK, TYPE, RELATIVE LOCATION, NAME)

 0000   000005 INJP$     0000 I 000002 N         0000 I 000000 NA        0000 I 000001 NB        0003 R 000000 TBLU1


00100      1*     CFU                                                                                  000003
00101      2*            SUBROUTINE FU(FTA,FO,FIN,AN)                                                  000003
00101      3*     C                                                                                    000003
00101      4*     C   PURPOSE - TO CALCULATE OUTPUT FO AS AN ARBITRARY FUNCTION OF                     000003
00101      5*     C             INPUT FIN USING TABULAR INPUT FTA GIVING FO=F(FIN)                     000003
00101      6*     C                                                                                    000003
00101      7*     C   METHOD  - SELF EXPLANATORY                                                       000003
00101      8*     C                                                                                    000003
00101      9*     C                                                                                    000003
00101     10*     C   LIMITATIONS - MAXIMUM ARRAY SIZE IS 18                                           000003
00101     11*     C                                                                                    000003
00101     12*     C                                                                                    000003
00101     13*     C   WRITTEN BY - ADAM LLOYD              LATEST REVISION     APRIL   77              000003
00101     14*     C                                                                                    000003
00101     15*     C                                                                                    000003
00101     16*     C   INPUT/OUTPUT LIST                                                                000003
00101     17*     C                                                                                    000003
00101     18*     C   FTA        TABULAR INPUT FO=F(FIN)        ANY            INPUT  TABLE             000003
00101     19*     C   FO         OUTPUT                         ANY            OUTPUT VAR               000003
00101     20*     C   FIN        INPUT                          ANY            INPUT  VAR               000003
00101     21*     C   AN         SET ABS(AN).GT.0.5 FOR UNEQUAL SPACED TABLE DATA---INPUT               000003
00101     22*     C              SET ABS(AN).LE.0.5 FOR EQUI-SPACED TABLE DATA                          000003
00101     23*     C              A NEGATIVE VALUE OF AN WILL                                            000003
00101     24*     C              PREVENT EXTRAPOLATION BEYOND                                           000003
00101     25*     C              TABLE LIMITS                                                           000003
00101     26*     C                                                                                    000003
00103     27*            DIMENSION FTA(1)                                                              000003
00104     28*            NA= SIGN(FTA(2),AN)                                                           000003
00105     29*            NP=FTA(2)+4                                                                   000015
00106     30*            N=1                                                                           000026
00107     31*            IF(ABS(AN).LE.0.5) N=0                                                        000030
00111     32*            FO=TBLU1(FIN,FTA(4),FTA(NB),N,NA)                                             000035
00112     33*            RETURN                                                                        000053
00113     34*            END                                                                           000074
```

FU

7.10 TWO DIMENSION TABLE LOOKUP

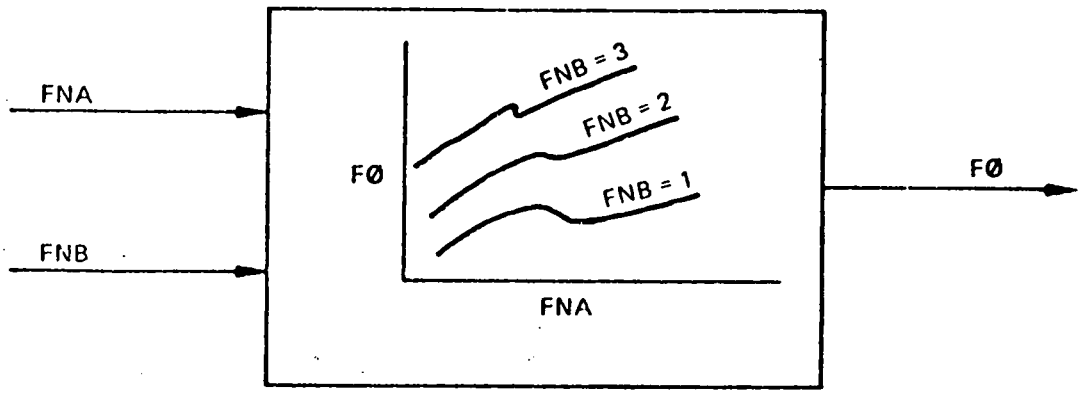

Tables	Description
FTA	Table of functional relationships (maximum number of table values = 144)

Inputs

Parameter/Port	
FNA	Input quantity (primary)
FNB	Input quantity (secondary)
AN	ABS(AN) ≤ 0.5 for equal spaced FNA data*
BN	ABS(BN) ≤ 0.5 for equal spaced FNB data*

Outputs

Variable/Port	
FØ	Output quantity

Calculation Sequence

FØ = FTA(FNA,FNB)

* A negative value for AN or BN prevents extrapolation beyond the table boundaries.

```
SUBROUTINE FV          ENTRY POINT 000161

STORAGE USED  CODE(1) 000204; DATA(0) 000036; BLANK COMMON(2) 000000

EXTERNAL REFERENCES (BLOCK, NAME)

 0003   TBLU2
 0004   NERR3$

STORAGE ASSIGNMENT  (BLOCK, TYPE, RELATIVE LOCATION, NAME)

 0000   000012 INJP$      0000 I 000006 NAN       0000 I 000007 NBN       0000 I 000000 N1        0000 I 000001 N2
 0000 I 000002 N3         0000 I 000003 N4        0000 I 000004 N5        0000 I 000005 N6        0003 R 000000 TBLU2


00100      1*      CFV                                                                                    000003
00101      2*            SUBROUTINE FV(FTA,FO,FNA,FNB,AN,BN)                                              000003
00101      3*      C                                                                                      000003
00101      4*      C   PURPOSE - TO CALCULATE OUTPUT FO AS AN ARBITRARY FUNCTION OF INPUT                 000003
00101      5*      C             VARIABLES FNA AND FNB. INPUT TABLE FTA IS USED GIVING                    000003
00101      6*      C             FO=F(FNA,FNB)                                                            000003
00101      7*      C                                                                                      000003
00101      8*      C   METHOD  - TWO DIMENSIONAL TABLE LOOKUP                                             000003
00101      9*      C                                                                                      000003
00101     10*      C                                                                                      000003
00101     11*      C   LIMITATIONS - MAX ALLOWABLE SIZE OF TABULAR ARRAY IS 12X12.                        000003
00101     12*      C                                                                                      000003
00101     13*      C                                                                                      000003
00101     14*      C   WRITTEN BY  - GEORGE DULEBA                    LATEST REVISION   MAY 76            000003
00101     15*      C                                                                                      000003
00101     16*      C                                                                                      000003
00101     17*      C   INPUT/OUTPUT LIST                                                                  000003
00101     18*      C                                                                                      000003
00101     19*      C   FTA        TABULAR INPUT                       ---            INPUT TABLE          000003
00101     20*      C   FO         OUTPUT                              ANY            OUTPUT VAR           000003
00101     21*      C   FNA        INPUT A                             ANY            INPUT  VAR           000003
00101     22*      C   FNB        INPUT B                             ANY            INPUT  VAR           000003
00101     23*      C   AN         SET ABS(AN) .GT. 0.5 FOR UNEQUAL SPACED FNA DATA- INPUT PARM            000003
00101     24*      C                  A NEGATIVE VALUE INDICATES THAT THE NEAREST END                     000003
00101     25*      C                  POINT IS TO BE USED UPON EXTRAPOLATION.                             000003
00101     26*      C   BN         SET ABS(BN) .GT. 0.5 FOR UNEQUAL SPACED FNB DATA- INPUT PARM            000003
00101     27*      C                  A NEGATIVE VALUE INDICATES THAT THE NEAREST END                     000003
00101     28*      C                  POINT IS TO BE USED UPON EXTRAPOLATION.                             000003
00101     29*      C                                                                                      000003
00103     30*            DIMENSION FTA(1)                                                                 000003
00104     31*            N1=FTA(3)+4                                                                      000003
00105     32*            N2=FTA(2)+FTA(3)+4                                                               000014
00106     33*            N3=FTA(2)                                                                        000026
```


FV

```
00107   34*        N4=FTA(3)                                                    000035
00110   35*        N5= SIGN(FTA(2),AN)                                          000044
00111   36*        N6= SIGN(FTA(3),BN)                                          000056
00112   37*        NAN=1                                                        000070
00113   38*        IF(ABS(AN).LE.0.5) NAN=0                                     000072
00115   39*        NBN=1                                                        000077
00116   40*        IF(ABS(BN).LE.0.5) NBN=0                                     000101
00120   41*        FO=TBLU2(FNA,FNB,FTA(N1),FTA(4),FTA(N2),NAN,NBN,N5,N6,N3,N4) 000114
00121   42*        RETURN                                                       000142
00122   43*        END                                                          000203
```

7.11 AC INDUCTION GENERATOR

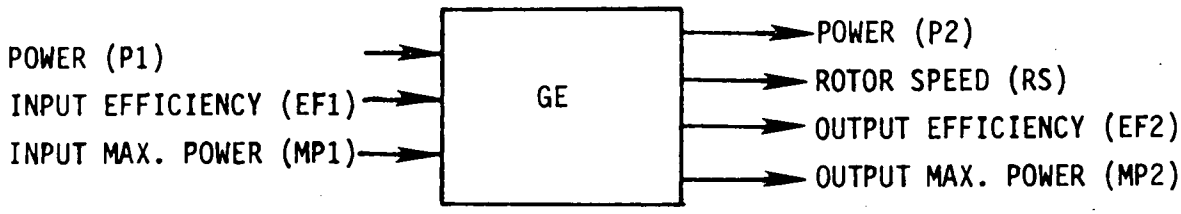

The induction generator produces electrical power proportional to rotor slip, i.e. difference between rotor speed and synchronous speed. This relationship is used to compute rotor speed given input power and the generator parameters. Two power losses are modeled: a constant multiplicative term due to resistive heating and an additive term due to mechanical friction. Default parameters are based on a conventional squirrel-cage induction motor/generator machine. This component can also be used as a synchronous generator with RAS$\leq$.01.

Basic Equations

Output power P2 and rotor speed RS are computed from the following equations:

$$P2 = EE*(P1-C*RS^2)$$

$$\frac{P2}{RAP} = \frac{(RS/RSY-1)}{RAS} \qquad \text{(Power is proportional to slip)}$$

where EE = electrical efficiency

C = constant of conversion

Inputs

Parameter/Port		Description	Units
P	1	Input power	kw
RAP		Rated output power	kw
RSY		Synchronous rotor speed (D = 1800)	rpm
RAS		Rated power slip (D = 0.05)	-
DA		Mechanical damping (D = 0.0)	joule-sec
SR		Internal stator resistance (D = 6.4/RAP)	ohms
VØ		Rated bus voltage (D = 400)	volts
EF	1	Input product efficiency	-
MP	1	Maximum input discharge rate (D = 1×10^8)	kw
CC		Capital cost/year	$
CM		Maintenance cost/year	$

Outputs

Variable/Port			
P	2	Output power	kw
EE		Electrical efficiency	-
RS		Rotor speed	rpm
PL		Power loss	kw
EF	2	Output product efficiency	-
MP	2	Maximum output discharge rate	kw

Statistics

MPN	Maximum output power/rated power	kw
SP	Total output energy	kwh

D - Default values supplied.

Calculation Sequence

1) First pass only

$$EFF = 1$$

$$I_{RAT} = RAP*1000/V\emptyset$$

$$EE = \frac{RAP}{RAP+SR*I^2_{RAT}/1000}$$

2) If P1 = 0 set P2 = 0, RS = RSY and go to 4)

Compute rotor speed ω in rad/sec using

$$\frac{EE(P1*1000 - \omega^2*DA)}{RAP*1000} = \frac{(\omega/\omega_o - 1)}{RAS}$$

with $\omega_o = RSY*(2\pi/60)$

3) Compute RS and output power

$$RS = \omega*(60/2\pi)$$

$$P2 = RAP(RS/RSY-1)/RAS$$

$$P2 > RAP \Rightarrow \text{DIAGNOSTIC}$$

$$EFF = P2/P1$$

4) Compute loss, efficiency terms

$$PL = P1-P2$$

$$EF2 = EF1*EFF$$

5) Compute maximum output rate

$$MP2 = MIN(RAP,MP1*EFF)$$

6) Compute Statistics and Costs

```
SUBROUTINE GE        ENTRY POINT 000253

STORAGE USED  CODE(1) 000363; DATA(0) 000043; BLANK COMMON(2) 000000

 COMMON BLOCKS

 0003   CIMPL  000002
 0004   CTIME  000001
 0005   COST   000004
 0006   CSIMUL 000010

EXTERNAL REFERENCES (BLOCK, NAME)

 0007   NWDU$
 0010   NIO2$
 0011   NERR3$

STORAGE ASSIGNMENT  (BLOCK, TYPE, RELATIVE LOCATION, NAME)

 0001   000064 10L      0000   000005 100F     0001   000074 20L      0001   000172 30L      0000 R 000003 A
 0000 R 000004 B        0005 R 000000 CC       0005 R 000001 CM       0005   000003 CV       0005   000002 CO
 0006   000000 DUM      0000 R 000000 EFF      0003 I 000001 ICNT     0003 I 000000 IMPL     0000   000032 INJPS
 0000 R 000002 RATI     0004 R 000000 TIME     0006 R 000006 TINC     0006 R 000007 TMAX     0000 R 000001 TMAX1
```

```
00100      1*     C6E                                                                          000000
00101      2*            SUBROUTINE GE(P2,EE,RS,PL,EF2,PM2,PMN,SP,P1,RAP,RSY,RAS,DA,SR,VO,     000000
00101      3*          1 EF1,PM1,CCI,CMI)                                                      000000
00101      4*     C                                                                            000000
00101      5*     C   PURPOSE     MODEL AC INDUCTION GENERATOR                                 000000
00101      6*     C                                                                            000000
00101      7*     C   METHOD      MECHANICAL AND ELECTRICAL EFFICIENCIES ARE USED TO COMPUTE   000000
00101      8*     C               OUTPUT POWER.  ROTOR SPEED IS COMPUTED ASSUMING POWER IS     000000
00101      9*     C               PROPORTIONAL TO SLIP.                                        000000
00101     10*     C                                                                            000000
00101     11*     C   WRITTEN BY A.W. WARREN                          VERSION 1, MARCH 16 1977 000000
00101     12*     C                                                                            000000
00101     13*     C   CALL SEQUENCE                                                            000000
00101     14*     C         OUTPUTS                                                            000000
00101     15*     C               P2  - OUTPUT POWER, KW                                       000000
00101     16*     C               EE  - ELECTRICAL EFFICIENCY                                  000000
00101     17*     C               RS  - ROTOR SPEED, RPM                                       000000
00101     18*     C               PL  - POWER LOSS, KW                                         000000
00101     19*     C               EF2 - OUTPUT PRODUCT EFFICIENCY                              000000
00101     20*     C               PM2 - MAXIMUM OUTPUT POWER, KW                               000000
00101     21*     C               PMN - MAX. OBSERVED OUTPUT POWER / RATED POWER               000000
00101     22*     C               SP  - TOTAL OUTPUT ENERGY, KWH                               000000
00101     23*     C                                                                            000000
```

```
00101     24*     C          INPUTS                                                  000000
00101     25*     C               P1  - INPUT POWER, KW                              000000
00101     26*     C               RAP - RATED OUTPUT POWER, KW                       000000
00101     27*     C               RSY - SYNCHRONOUS ROTOR SPEED, RPMN                000000
00101     28*     C               RAS - RATED POWER SLIP (DEFAULT = .05)             000000
00101     29*     C               DA  - MECHANICAL DAMPING, JOULE-SEC                000000
00101     30*     C               SR  - STATOR RESISTANCE, OHMS                      000000
00101     31*     C               VO  - RATED BUS VOLTAGE, VOLTS                     000000
00101     32*     C               EF1 - INPUT PRODUCT EFFICIENCY                     000000
00101     33*     C               PM1 - MAXIMUM INPUT POWER, KW                      000000
00101     34*     C               CCI - CAPITAL COST/YEAR, $                         000000
00101     35*     C               CMI - MAINTENANCE COST/YEAR, $                     000000
00101     36*     C                                                                  000000
00103     37*           COMMON /CIMPL/ IMPL,ICNT /CTIME/ TIME                        000000
00104     38*           COMMON /COST/ CC,CM,CO,CV /CSIMUL/ DUM(6),TINC,TMAX          000000
00104     39*     C                        INITIALIZATION                            000000
00104     40*     C                                                                  000000
00105     41*           IF( IMPL.GT.0) GO TO 10                                      000000
00107     42*           EFF = 1.                                                     000002
00110     43*           TMAX1 = TMAX* .99999                                         000004
00111     44*           IF(RSY.EQ. .99999) RSY = 1800.                               000007
00113     45*           IF(RAS.EQ. .99999) RAS = .05                                 000014
00115     46*           IF(DA .EQ. .99999) DA = 0.                                   000021
00117     47*           IF(SR .EQ. .99999) SR = 6.4/RAP                              000025
00121     48*           IF(VO .EQ. .99999) VO = 400.                                 000033
00123     49*           IF(PM1.EQ. .99999) PM1 = 1.E10                               000040
00125     50*           PMN =0.0                                                     000045
00126     51*           SP  =0.0                                                     000046
00127     52*           RATI = RAP*1000./VO                                          000047
00130     53*           EE  = RAP/(RAP + SR*.001*RATI**2)                            000053
00130     54*     C                                                                  000053
00130     55*     C                        COMPUTE ROTOR SPEED AND OUTPUT POWER      000053
00130     56*     C                                                                  000053
00131     57*        10 IF( P1.GT. 0.) GO TO 20                                      000064
00133     58*           P2 =0.0                                                      000066
00134     59*           PL =0.0                                                      000067
00135     60*           RS = RSY                                                     000070
00136     61*           GO TO 30                                                     000072
00136     62*     C                                                                  000072
00137     63*        20 A = RAP/(EE*RAS)                                             000074
00140     64*           B = RSY/( A + RSY**2*DA*1.0966E-5)                           000100
00141     65*           RS = B*(A + P1)                                              000110
00142     66*           P2 = RAP*(RS/RSY -1.)/RAS                                    000114
00143     67*           IF (P2.GT.RAP.AND.IMPL.EQ.2) WRITE(6,100)                    000121
00146     68*       100 FORMAT(1H0, 40X,37HGENERATOR OUTPUT EXCEEDS RATED POWER /)   000143
00146     69*     C                                                                  000143
00147     70*           IF(P2.GT.RAP .AND. IMPL.EQ.2)ICNT=ICNT+1                     000143
00151     71*           PL = P1 - P2                                                 000163
00152     72*           EFF = P2/P1                                                  000166
00153     73*        30 EF2 = EF1*EFF                                                000172
00154     74*           PM2 = AMIN1(RAP, PM1*EFF)                                    000174
00154     75*     C                                                                  000174
00154     76*     C                        STATISTICS                                000174
00155     77*           IF(IMPL.LE.1) RETURN                                         000203
00157     78*           PMN = AMAX1(PMN, P2/RAP)                                     000212
00160     79*           SP = SP + P2*.5*TINC                                         000221
00160     80*     C                                                                  000221
```

```
00160      81*      C                                COST SUMMATION                                    000221
00161      82*               IF( TIME.LT.TMAX1) RETURN                                                 000226
00163      83*               CC = CC + CCI                                                             000235
00164      84*               CM = CM + CMI                                                             000240
00164      85*      C                                                                                  000240
00165      86*               RETURN                                                                    000243
00166      87*               END                                                                       000362
```

7.12 FIXED RATIO TRANSMISSION

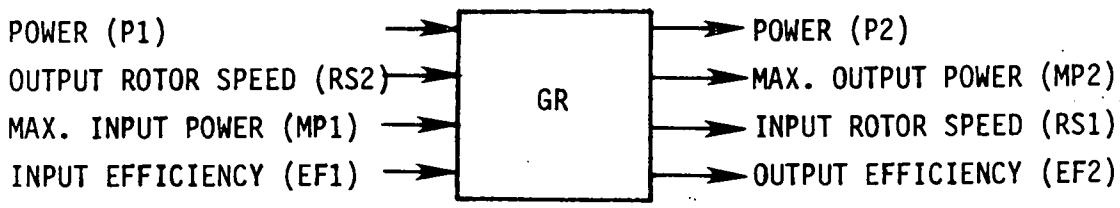

This component models a fixed gear ratio transmission. Power losses are modeled by a table lookup depending on input power. Rotor input speed is used as a feedback variable.

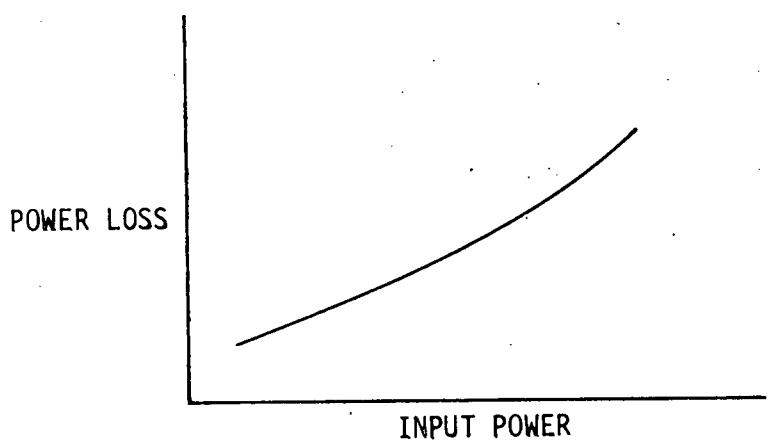

FIGURE 7.12: FIXED GEAR POWER LOSS

Tables		Description	Units
PLØ		Power loss versus input power	kw

Inputs

Parameter/Port			
GR		Gear ratio	-
RS	2	Output rotor speed	rpm
P	1	Input power	kw
EF	1	Input product efficiency	-
MP	1	Maximum input power (Default = 1×10^8)	kw
CC		Capital cost/year	$
CM		Maintenance cost/year	$

Outputs

Variable/Port			
P	2	Output power	kw
TØ		Output torque	ft-lb
PL		Power loss	kw
EF	2	Output product efficiency	-
MP	2	Maximum output power	kw
RS	1	Input rotor speed	rpm

Calculation Sequence

1) MP2 = MP1 - PLØ(MP1) (First Pass Only)

If P1 ≤ 0, set PL = P2 = 0 and go to 2)

PL = PLØ(P1)

P2 = P1 - PL

RS1 = RS2/GR

EF2 = EF1*P2/P1

2) TØ = P2*737.6/(RS2*2π/60)

3) Compute Costs

```
SUBROUTINE GR          ENTRY POINT 000157

STORAGE USED  CODE(1) 000237; DATA(0) 000023; BLANK COMMON(2) 000000

 COMMON BLOCKS

 0003   CIMPL   000001
 0004   CTIME   000001
 0005   COST    000004
 0006   CSIMUL  000010

EXTERNAL REFERENCES (BLOCK, NAME)

 0007   TBLU1
 0010   NEPR3$

STORAGE ASSIGNMENT  (BLOCK, TYPE, RELATIVE LOCATION, NAME)

 0001   000057 10L       0001   000113 20L       0005 R 000000 CC        0005 R 000001 CM        0005   000002 CO
 0005   000003 CV        0006   000000 DUM       0003 I 000000 IMPL      0000   000007 INJPS     0000 I 000000 NP
 0007 R 000000 TBLU1     0004 R 000000 TIME      0006 R 000007 TMAX      0000 R 000001 TMAX1
```

```
00100      1*     CGR                                                                    000000
00101      2*            SUBROUTINE GR(PLO,P2,TO,PL,EF2,PM2,RS1,GRA,RS2,P1,EF1,PM1,CCI,CMI)  000000
00101      3*     C                                                                      000000
00101      4*     C    PURPOSE   MODEL A FIXED GEAR RATIO TRANSMISSION                   000000
00101      5*     C                                                                      000000
00101      6*     C    METHOD    POWER LOSSES ARE INPUT AS A FUNCTION OF INPUT POWER P1. 000000
00101      7*     C                                                                      000000
00101      8*     C    WRITTEN BY A.W. WARREN                          VERSION 1, MARCH 16 1977  000000
00101      9*     C                                                                      000000
00101     10*     C    CALL SEQUENCE                                                     000000
00101     11*     C         TABLES                                                       000000
00101     12*     C              PLO - POWER LOSS IN KW VERSUS INPUT POWER IN KW         000000
00101     13*     C                                                                      000000
00101     14*     C         OUTPUTS                                                      000000
00101     15*     C              P2  - OUTPUT POWER, KW                                  000000
00101     16*     C              TO  - OUTPUT TORQUE, FT-LB                              000000
00101     17*     C              PL  - POWER LOSS, KW                                    000000
00101     18*     C              EF2 - OUTPUT PRODUCT EFFICIENCY                         000000
00101     19*     C              PM2 - MAXIMUM OUTPUT POWER, KW                          000000
00101     20*     C              RS1 - INPUT ROTOR SPEED, RPM                            000000
00101     21*     C                                                                      000000
00101     22*     C         INPUTS                                                       000000
00101     23*     C              GRA - GEAR RATIO                                        000000
00101     24*     C              RS2 - OUTPUT ROTOR SPEED, RPM                           000000
00101     25*     C              P1  - INPUT POWER, KW                                   000000
```

```
00101   26*   C              EF1 - INPUT PRODUCT EFFICIENCY                    000000
00101   27*   C              PM1 - MAXIMUM INPUT POWER, KW                     000000
00101   28*   C              CCI - CAPITAL COST / YEAR, $                      000000
00101   29*   C              CMI - MAINTENANCE COST / YEAR, $                  000000
00101   30*   C                                                                000000
00103   31*         DIMENSION PLO(1)                                            000000
00104   32*         COMMON /CIMPL/IMPL /CTIME/ TIME                             000000
00105   33*         COMMON /COST/CC,CM,CO,CV /CSIMUL/ DUM(7),TMAX               000000
00105   34*   C                                                                000000
00105   35*   C                        INITIALIZATION                          000000
00105   36*   C                                                                000000
00106   37*         NP = PLO(2)                                                 000000
00107   38*         IF( IMPL.GT.0) GO TO 10                                     000000
00111   39*         EF2= 1.                                                     000007
00112   40*         TMAX1 = .99999*TMAX                                         000012
00113   41*         RS2=1.                                                      000014
00114   42*         IF(PM1.EQ. .99999) PM1=1.E10                                000021
00116   43*         PM2 = PM1                                                   000023
00117   44*         IF(PM1.LE. PLO(3+NP) ) PM2 = PM1-TBLU1(PM1,PLO(4),PLO(4+NP),1,-NP)  000030
00117   45*   C                                                                000032
00117   46*   C                        POWER LOSS AND ROTOR SPEED CALUCATIONS  000032
00121   47*      10 PL=0.                                                       000032
00122   48*         P2=0.                                                       000057
00123   49*         IF(P1 .EQ. 0.) GO TO 20                                     000057
00125   50*         PL = TBLU1(P1,PLO(4),PLO(4+NP),1,-NP)                       000060
00126   51*         P2 = P1 - PL                                                000062
00127   52*         EF2 = EF1*P2/ P1                                            000102
00130   53*         RS1 = RS2/GPA                                               000104
00131   54*      20 IF(RS2 .GT. 0.) TO = P2*7043./RS2                           000107
00131   55*   C                                                                000113
00131   56*   C                        COST SUMMATION                          000113
00133   57*         IF(IMPL.LE.1) RETURN                                        000113
00135   58*         IF(TIME.LE.TMAX1) RETURN                                    000121
00137   59*         CC = CC + CCI                                               000130
00140   60*         CM = CM + CMI                                               000137
00141   61*         RETURN                                                      000142
00142   62*         END                                                         000145
                                                                                000236
```

7.13 HISTOGRAM

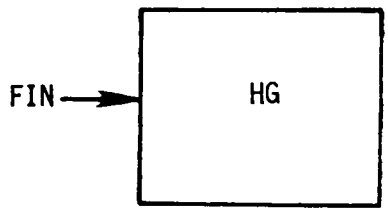

The input quantity is monitored during a SIMULATE analysis. When time reaches TMAX a plotted histogram is produced with 16 intervals that span the range from FLO to FUP.

Inputs

Variable/Port	Description
FIN	Input quantity to be monitored
FUP	Upper limit for histogram
FLØ	Lower limit for histogram
F1,...F16[1]	Array containing histogram data
FA[1]	Measurement interval

Outputs

Variable/Port	
AV	Mean value (running sum during simulation)
SD	Standard deviation (running sum squared)
SAM	Number of samples

[1] These quantities do not require data input values.

```
SUBROUTINE HG          ENTRY POINT 000430

STORAGE USED  CODE(1) 000506; DATA(0) 000166; BLANK COMMON(2) 012174

 COMMON BLOCKS

 0003    CTIME   000001
 0004    CSIMUL  000010
 0005    COVRLY  000004
 0006    CIMPL   000001

EXTERNAL REFERENCES (BLOCK, NAME)

 0007    SQRT
 0010    NWNUS
 0011    NIO3$
 0012    NIO2$
 0013    NIO1$
 0014    NERR3$

STORAGE ASSIGNMENT  (BLOCK, TYPE, RELATIVE LOCATION, NAME)

 0001    000023 100L      0000    000052 100CF     0000    000056 110CF     0001    000012 120G      0000    000062 120CF
 0000    000067 130CF     0001    000034 134G      0000    000073 140CF     0001    000111 154G      0001    000154 166G
 0001    000175 177G      0001    000203 205G      0001    000211 213G      0001    000216 220G      0001    000223 225G
 0001    000224 230G      0001    000234 236G      0001    000257 243G      0001    000272 246G      0001    000306 255G
 0001    000314 262G      0001    000053 300L      0001    000364 303G      0001    000364 305G      0000    000047 900F
 0000 R  000010 AX1       0000 R  000030 BLANK     0005    000003 CPUSEC    0004    000000 DUM       0005    000000 DUMM
 0000 R  000036 FAX       0002 R  000000 GRAPH     0000 R  000032 HORIZ     0000 R  000041 HX        0000 I  000034 I
 0000 I  000043 IC        0006 I  000000 IMPL      0000    000135 INJPS     0000 I  000037 ISAMP     0000 I  000042 J
 0000 I  000044 J1        0000 I  000045 J2        0000 I  000046 J3        0000 I  000035 L         0000 R  000033 POINT
 0000 R  000000 TD1       0003 R  000000 TIME      0004 R  000007 TMAX      0000 R  000031 VERT      0000 R  000040 XMAX


00100      1*      CHG                                                                                    000003
00101      2*            SUBROUTINE HG(SAMP,AV,SD,F1,F2,F3,F4,F5,F6,F7,F8,F9,F10,F11,                    000003
00101      3*           1 F12,F13,F14,F15,F16,FA, FIN,FUP,FLO )                                          000003
00101      4*      C      VERSION 2.        REVISED   MARCH  1977                                         000003
00101      5*      C  PURPOSE - DEVELOP A RUNNING HISTOGRAM OF AN INPUT SEQUENCE                          000003
00101      6*      C  CALL SEQUENCE                                                                       000003
00101      7*      C            SAMP- OUTPUT NUMBER OF SAMPLES                                            000003
00101      8*      C            AV  - OUTPUT AVERAGE (RUNNING SUM)                                        000003
00101      9*      C            SD  - OUTPUT STANDARD DEVIATION (RUNNING SUM SQUARED)                     000003
00101     10*      C        F1-F16  -  ARRAY WITH NUMBER OF OCCURENCES IN EACH INTERVAL                   000003
00101     11*      C           FA   - OUTPUT CONTAINING MEASUREMENT INTERVAL                              000003
00101     12*      C           FUP  - INPUT SPECIFYING UPPER MEASUREMENT LIMIT                            000003
00101     13*      C           FLO  - INPUT SPECIFYING LOWER MEASUREMENT LIMIT                            000003
00101     14*      C           FIN  - INPUT MEASUREMENT                                                   000003
```

HG

```
00103   15*          DIMENSION F1(16),TD1(8),AX1(16)                    000003
00104   16*        DIMENSION GRAPH(114,46)                              000003
00105   17*        COMMON GRAPH                                         000003
00106   18*        COMMON/CTIME/TIME/CSIMUL/DUM(7),TMAX                 000003
00107   19*        COMMON/COVRLY/DUMM(3),CPUSEC /CIMPL/IMPL             000003
00110   20*        DATA PLANK,VERT,HORIZ,POINT/1H ,1HI,1H-,1H*/         000003
00115   21*        IF(IMPL.GT.0) GO TO 100                              000003
00117   22*        DO 50 I=1,16                                         000003
00122   23*     50 F1(I)=0.                                             000012
00124   24*        FA=(FUP-FLO)/14.                                     000012
00125   25*        SD=0.                                                000013
00126   26*        AV =0.0                                              000017
00127   27*        SAMP=0.0                                             000020
00130   28*    100 CONTINUE                                             000021
00131   29*        IF(IMPL.LT.2) RETURN                                 000023
00133   30*        DO 200 I=1,16                                        000023
00136   31*        L=I                                                  000034
00137   32*        FAX=FLO+(I-1)*FA                                     000034
00140   33*        IF(FIN.LE.FAX) GO TO 300                             000036
00142   34*    200 CONTINUE                                             000045
00144   35*    300 F1(L)=F1(L)+1.                                       000053
00145   36*        SAMP=SAMP+1.                                         000053
00146   37*        AV=AV+FIN                                            000057
00147   38*        SD=SD+FIN*FIN                                        000062
00150   39*        IF(TIME.LT.TMAX*.99999)RETURN                        000065
00152   40*        SAMP=0.                                              000071
00153   41*        DO 350 I=1,16                                        000104
00156   42*    350 SAMP=SAMP+F1(I)                                      000111
00160   43*        ISAMP=SAMP                                           000111
00161   44*        ISAMP=MAX0(1,ISAMP)                                  000114
00162   45*        AV=AV/ISAMP                                          000123
00163   46*        SD=SQRT(SD/ISAMP-AV*AV)                              000130
00164   47*        XMAX=F1(1)                                           000135
00165   48*        DO 360 I=1,16                                        000147
00170   49*    360 IF(F1(I).GE.XMAX) XMAX=F1(I)                         000154
00173   50*        IF(XMAX.EQ.0.) XMAX=10.                              000154
00175   51*        HX=XMAX/44.                                          000163
00176   52*        DO 370 I=1,46                                        000167
00201   53*        GRAPH(1,I)=VERT                                      000175
00202   54*    370 GRAPH(114,I)=VERT                                    000175
00204   55*        DO 380 I=2,113                                       000176
00207   56*        GRAPH(I,1)=HORIZ                                     000203
00210   57*    380 GRAPH(I,46)=HORIZ                                    000203
00212   58*        DO 400 I=5,103,14                                    000204
00215   59*    400 GRAPH(I,46)=VERT                                     000211
00217   60*        DO 450 I=8,106,7                                     000211
00222   61*    450 GRAPH(I,1)=VERT                                      000216
00224   62*        DO 500 I=2,45                                        000216
00227   63*        DO 500 J=2,113                                       000224
00232   64*    500 GRAPH(J,I)=BLANK                                     000224
00235   65*        DO 600 IC=1,16                                       000224
00240   66*        J=IFIX(45.5-F1(IC)/HX)                               000234
00241   67*        DO 600 J1=1,7                                        000240
00244   68*        J2=(IC-1)*7+J1+1                                     000252
00245   69*        DO 600 J3=J,45                                       000257
00250   70*                                                             000263
00250   71*    600 GRAPH(J2,J3)=POINT                                   000272
                                                                        000272
```

```
00254      72*          DO 700 I=1,16                                          000306
00257      73*                                                                 000306
00257      74*      700 AX1(I)=F1(I)/ISAMP                                     000306
00261      75*          DO 800 I=1,8                                           000314
00264      76*                                                                 000314
00264      77*      800 TD1(I)=FLO+(I-1)*2.*FA-FA/2.                           000314
00266      78*                                                                 000330
00266      79*          WRITE(6,900)(GRAPH(I,1),I=1,114)                       000330
00271      80*      900 FORMAT(1HI,9X,114A1/)                                  000340
00272      81*          WRITE(6,1000)(AX1(I),I=1,16)                           000340
00275      82*     1000 FORMAT(1H+,9X,1HI,16F7.5,1HI/)                         000350
00276      83*          WRITE(6,1100)                                          000350
00300      84*     1100 FORMAT(1H+,9X,1HI,112X,1HI/)                           000355
00301      85*          WRITE(6,1200)((GRAPH(I,J),I=1,114),J=2,46)             000355
00312      86*     1200 FORMAT(1H+,9X,114A1/45(10X,114A1/))                    000367
00313      87*          WRITE(6,1300)(TD1(I),I=1,8)                            000367
00316      88*     1300 FORMAT (1H+,9X,8(F13.5,1X)//)                          000377
00317      89*          WRITE(6,1400) ISAMP,AV,SD                              000377
00324      90*     1400 FORMAT(1H+,10X,14HHISTOGRAM FOR ,I7,8H SAMPLES,        000407
00324      91*         19H   MEAN= ,F13.5,18H   STANDARD DEV.= ,F13.5/)        000407
00325      92*          RETURN                                                 000407
00326      93*          END                                                    000505
```

7.14 HYDRO STORAGE VESSEL

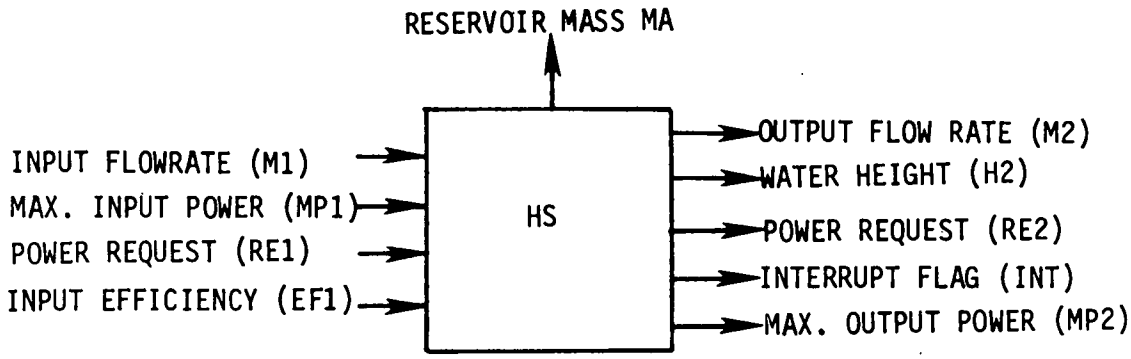

The hydro storage vessel is modeled as an above ground reservoir with a large and constant surface area. The change in reservoir height between maximum and minimum levels is assumed small in comparison to the height of the water above the turbine. Hence, reservoir height is assumed constant. The reservoir has specified evaporation and leakage rates. Average input flow gained by rainfall is also specified. Energy storage is calculated based on the potential energy of the water in the reservoir relative to the turbine inlet.

<u>Basic Equation</u>

$$MA = M1 - M2 - NE*AS - NL + MDR*AS/14052$$

Inputs

Parameter/Port		Description	Units
M	1	Input water mass flow rate	gal/h
NE		Evaporation coefficient (D = 0.03)	gal/ft^2-h
AS		Reservoir surface area	ft^2
NL		Leakage coefficient (D = 8.0)	gal/h
MDR		Rainfall rate	inches/year
MDM		Maximum allowable mass flow rate (D = 4X10^5)	gal/h
MM		Maximum allowable reservoir capacity (D=5X10^6)	gal
MØ		Minimum allowable reservoir capacity	gal
H	1	Reservoir height above turbine	ft
MDE		Reservoir deadband for priority resequence	gal
RE	1	Power request (discharge)	kw
CR		Reservoir cost coefficient (D = 0.025)	$/gal
EF	1	Input product efficiency	-
MP	1	Maximum input charging rate	kw
LE		Reservoir life expectancy	years
CM		Maintenance cost/year	$

Outputs

Variable/Port			
M	2	Outlet water mass flow rate	gal/hr
E		Energy stored	kwh
H	2	Reservoir height above turbine (=H1)	ft
MA		Reservoir mass (state)	gal
CCØ		Reservoir cost/year	$
MP	2	Maximum discharge rate allowable	kw
INT		Priority interrupt flag	-
RE	2	Maximum charging rate request	kw

D - Default values supplied

Statistics	Description	Units
MDU	Maximum mass flow rate	gal/hr
MU	Maximum reservoir mass	gal
ML	Minimum reservoir mass	gal

The calculation sequence and default values assume a pond sized for 120kw storage for 24 hours ($5x10^6$ gallons of water 200 ft. above turbine inlet). The evaporation coefficient NE assures the pond drops ½" in height per 10 hours. To obtain a more accurate value for this parameter requires knowledge of local conditions. The leakage coefficient NL is based on the assumption of a loss of 0.1% of the maximum reservoir capacity in the rated storage time of 24 hours. The reservoir cost estimates are based on the compensation reservoir given in Reference 1.

1. "Preliminary Feasibility Evaluation of Compressed Air Storage Power Systems," United Technologies AER 74-00242, December 1976.

Calculation Sequence

C1 = conversion constant = $0.377 \times 10^{-6} \frac{kwh}{ft-lb}$

C2 = conversion constant = 8.3398 lb/gal

A = C1*C2*H1

1) Reservoir cost

CC = CR*MM/LE

2) Volume of water discharged

M2 = RE1/A

3) Reservoir water volume

$\dot{M}A$ = M1 - M2 - NE*AS-NL +(MDR*AS/14052.)

4) Energy stored

E = A*M

5) Checks

M1 > MDM or M2 > MDM ⇨ DIAGNOSTIC

M>MM, ⇨ DIAGNOSTIC

M<MØ ⇨ DIAGNOSTIC

6) Priority interrupt

If M≤MØ, INT = 1

IF M>MØ+MDE and INT=1, INT = 0

If M≥MM, INT = -1

If M<MM-DME and INT = -1, INT = 0

Calculation Sequence Cont.

7) Maximum charging rate request

MD1 = MIN (MDM,(MM-M)/TINC)

RE2 = MIN (MP1,MD1*A)/EF1

Maximum discharge rate

MP2 = A * MIN (MDM,(M-MØ)/TINC)

where TINC = integration step size in hrs

8) Compute Statistics and Costs

```
SUBROUTINE HS          ENTRY POINT 000405

STORAGE USED  CODE(1) 000551; DATA(0) 000117; BLANK COMMON(2) 000000

 COMMON BLOCKS

 0003   CIMPL   000002
 0004   CTIME   000001
 0005   CSIMUL  000010
 0006   COST    000002

EXTERNAL REFERENCES (BLOCK, NAME)

 0007   NWDU$
 0010   N102$
 0011   NERR3$

STORAGE ASSIGNMENT  (BLOCK, TYPE, RELATIVE LOCATION, NAME)

 0001   000055 100L      0000   000005 1010F     0000   000030 1020F     0000   000045 1030F     0001   000144 200L
 0001   000171 300L      0001   000215 400L      0000 R 000004 A         0006 R 000000 CCI       0006 R 000001 CMI
 0000 R 000003 C1        0005 R 000000 DUM       0003 I 000001 ICNT      0003 I 000000 IMPL      0000   000076 INJP$
 0000 R 000001 MDM1      0000 R 000000 MD1       0004 R 000000 TIME      0005 R 000007 TMAX      0000 R 000002 TMAX1
```

```
00100      1*      CHS                                                                    000000
00101      2*            SUBROUTINE HS(M,DM,IM,M2,E,H2,CC,MP2,INT,RE2,MDU,MU,ML,M1,NE    000000
00101      3*           1           ,AS,NL,MDR,MDM,MH,MO,H1,MDE,RE1,CR,EF1,MP1,LE,CM)    000000
00101      4*      C                                                                      000000
00101      5*      C   PURPOSE    PERFORMANCE OF A LARGE RESERVOIR AS AN ENERGY STORAGE   000000
00101      6*      C                                                                      000000
00101      7*      C              DEVICE.                                                 000000
00101      8*      C                                                                      000000
00101      9*      C   METHOD     ENERGY IN STORAGE IS CALCULATED FROM THE POTENTIAL      000000
00101     10*      C                                                                      000000
00101     11*      C              BETWEEN THE RESERVOIR AND THE TURBINE INLET.            000000
00101     12*      C                                                                      000000
00101     13*      C   WRITTEN BY F. O. MAHONY                  VERSION 1, MARCH 30 1977  000000
00101     14*      C                                                                      000000
00101     15*      C   CALL SEQUENCE                                                      000000
00101     16*      C         OUTPUTS                                                      000000
00101     17*      C             M    - RESERVOIR MASS (STATE VARIABLE), GAL              000000
00101     18*      C             DM   - RESERVOIR MASS FLOWRATE, GAL/HR                   000000
00101     19*      C             IM   - STATUS INDICATOR                                  000000
00101     20*      C             M2   - OUTLET WATER MASS FLOW RATE, GAL/HR               000000
00101     21*      C             E    - ENERGY STORED, KWH                                000000
00101     22*      C             H2   - RESERVOIR HEIGHT ABOVE TURBINE (=H1), FT          000000
00101     23*      C             CC   - RESERVOIR COST/YEAR, $                            000000
```

HS

```
00101   24*   C          MP2 - MAXIMUM DISCHARGE RATE ALLOWABLE, KW                    000000
00101   25*   C          INT - PRIORITY INTERUPT FLAG                                  000000
00101   26*   C          RE2 - MAXIMUM CHARGING RATE REQUEST, KW                       000000
00101   27*   C          MDU - MAXIMUM MASS FLOW RATE, GAL/HR                          000000
00101   28*   C          MU  - MAXIMUM RESERVOIR MASS, GAL                             000000
00101   29*   C          ML  - MINIMUM RESERVOIR MASS, GAL                             000000
00101   30*   C                                                                        000000
00101   31*   C      INPUTS                                                            000000
00101   32*   C          M1  - INPUT WATER MASS FLOW RATE, GAL/HR                      000000
00101   33*   C          NE  - EVAPORATION COEFFICIENT, GAL/FT**2-HR                   000000
00101   34*   C          AS  - RESERVOIR SURFACE AREA, FT**2                           000000
00101   35*   C          NL  - LEAKAGE COEFFICIENT                                     000000
00101   36*   C          MDR - RAINFALL RATE, INCHES/YEAR                              000000
00101   37*   C          MDM - MAXIMUM ALLOWABLE MASS FLOW RATE, GAL/HR                000000
00101   38*   C          MM  - MAXIMUM ALLOWABLE RESERVOIR CAPACITY, GAL               000000
00101   39*   C          MO  - MINIMUM ALLOWABLE RESERVOIR CAPACITY, GAL               000000
00101   40*   C          H1  - RESERVOIR HEIGHT ABOVE TURBINE, FT                      000000
00101   41*   C          MDE - RESERVOIR DEADBAND FOR PRIORITY RESEQUENCE, GAL         000000
00101   42*   C          RE1 - POWER REQUEST (DISCHARGE), KW                           000000
00101   43*   C          CR  - RESERVOIR COST COEFFICIENT                              000000
00101   44*   C          EF1 - INPUT PRODUCT EFFICIENCY                                000000
00101   45*   C          MP1 - MAXIMUM INPUT CHARGING RATE, KW                         000000
00101   46*   C          LE  - RESERVOIR LIFE EXPECTANCY, YEARS                        000000
00101   47*   C          CM  - MAINTENANCE COST/YEAR, $                                000000
00101   48*   C                                                                        000000
00103   49*        COMMON/CIMPL/IMPL,ICNT/CTIME/TIME/CSIMUL/DUM(7),TMAX                000000
00104   50*        COMMON/COST/CCI,CMI                                                 000000
00105   51*        REAL M2,MP2,MDU,MU,ML,M1,NE,NL,MDR,MDM,MM,MO,MDE,MP1,LE,INT,M       000000
00106   52*        REAL MD1,MDM1                                                       000000
00106   53*   C                                                                        000000
00107   54*        IF(IMPL.GT.0)GO TO 100                                              000000
00107   55*   C                                                                        000000
00111   56*        RF1=0.0                                                             000002
00112   57*        H2=H1                                                               000003
00113   58*        TMAX1=TMAX*0.99999                                                  000005
00114   59*        C1 = 3.1441E-6                                                      000010
00114   60*   C                                                                        000010
00115   61*        INT=0.0                                                             000012
00116   62*        MDU=0.0                                                             000013
00117   63*        MU =0.0                                                             000014
00120   64*        ML =1.0E10                                                          000015
00121   65*        IF(NE .EQ. .99999)NE =0.03                                          000017
00123   66*        IF(NL .EQ. .99999)NL =8.0                                           000024
00125   67*        IF(MDM.EQ. .99999)MDM=4.0E5                                         000031
00127   68*        IF(MM .EQ. .99999)MM =5.0E6                                         000036
00131   69*        IF(CR .EQ. .99999)CR =0.025                                         000043
00131   70*   C                                                                        000043
00131   71*   C                                                                        000043
00131   72*   C                    RESERVOIR COST                                      000043
00131   73*   C                                                                        000043
00133   74*        CC =CR*MM/LE                                                        000050
00133   75*   C                                                                        000050
00133   76*   C                    VOLUME OF WATER DISCHARGED                          000050
00133   77*   C                                                                        000050
00134   78*    100 A=C1*H1                                                             000055
0013    79*        M2 =RE1/A                                                           000057
0013    80*   C                                                                        000057
```

```
00135      81*      C                    RESERVOIR MASS FLOW RATE                                    000057
00135      82*      C                                                                                000057
00136      83*            IF(IM.NE.0)DM=M1-M2-NE*AS-NL*MDR*AS/14052.0                                000062
00136      84*      C                                                                                000062
00136      85*      C                    ENERGY STORED                                               000062
00136      86*      C                                                                                000062
00140      87*            E =A*M                                                                     000077
00140      88*      C                                                                                000077
00141      89*            MDM1=MDM/.9999                                                             000102
00142      90*            IF(M1.LT.MDM1.AND.                                                         000105
00142      91*           1  M2.LT.MDM1)GO TO 200                                                     000105
00142      92*      C                                                                                000105
00144      93*            IF(IMPL.EQ.2)WRITE(6,1010)M1,M2,MDM                                        000122
00152      94*            IF(IMPL.EQ.2) ICNT=ICNT+1                                                  000135
00152      95*      C                                                                                000135
00154      96*        200 IF(M .LT.MM+MDE)GO TO 300                                                  000144
00154      97*      C                                                                                000144
00156      98*            IF(IMPL.EQ.2)WRITE(6,1020)M,MM                                             000150
00163      99*            IF(IMPL.EQ.2)ICNT=ICNT+1                                                   000162
00163     100*      C                                                                                000162
00165     101*        300 IF(M .GT.MO)GO TO 400                                                      000171
00165     102*      C                                                                                000171
00167     103*            IF(IMPL.EQ.2)WRITE(6,1030)M,MO                                             000174
00174     104*            IF(IMPL.EQ.2) ICNT=ICNT+1                                                  000206
00174     105*      C                                                                                000206
00174     106*      C                    PRIORITY INTERRUPT                                          000206
00174     107*      C                                                                                000206
00176     108*        400 IF(M .LE.MO)INT=1.0                                                        000215
00200     109*            IF(M .GT.(MO+MDE).AND.                                                     000222
00200     110*           1  INT.EQ.1.0)INT=0.0                                                       000222
00202     111*            IF(M .GT.MM)INT=-1.0                                                       000241
00204     112*            IF(M .LT.(MM-MDE).AND.                                                     000247
00204     113*           1   INT.EQ.-1.0)INT=0.0                                                     000247
00204     114*      C                                                                                000247
00204     115*      C                    MAXIMUM CHARGE RATE REQUEST AND DISCHARGE RATE              000247
00204     116*      C                                                                                000247
00206     117*            MD1= AMIN1(MDM,AMAX1(0.,(MM-M)/DUM(7)))                                    000266
00207     118*            RE2=AMIN1(MP1,MD1*A)/EF1                                                   000302
00210     119*            MP2=AMIN1(MDM,AMAX1(0.,(M-MO)/DUM(7)))*A                                   000311
00210     120*      C                                                                                000311
00211     121*            IF(IMPL.LE.1)RETURN                                                        000326
00211     122*      C                                                                                000326
00211     123*      C                    STATISTICS                                                  000326
00211     124*      C                                                                                000326
00213     125*            MDU=AMAX1(DM,MDU)                                                          000335
00214     126*            MU =AMAX1(M ,MU )                                                          000343
00215     127*            ML =AMIN1(M ,ML )                                                          000351
00215     128*      C                                                                                000351
00216     129*            IF(TIME.LT.TMAX1)RETURN                                                    000357
00216     130*      C                                                                                000357
00220     131*            CCI=CCI+CC                                                                 000366
00221     132*            CMI=CMI+CM                                                                 000371
00221     133*      C                                                                                000371
00222     134*            RETURN                                                                     000374
00222     135*      C                                                                                000374
00223     136*       1010 FORMAT(1H0,23HHS INLET MASS FLOW RATE,F12.3, 5H  OR ,                      000550
00223     137*           1            21HOULET MASS FLOW RATE,F12.3,                                 000550
```

```
00223     138*          2            26H   IS GREATER THAN MAXIMUM,F12.3)                    000550
00224     139*      1020 FORMAT(1H0,19HHS RESERVOIR VOLUME,F12.3,                             000550
00224     140*          1            30H    EXCEEDED MAXIMUM ALLOWABLE,F12.3)                 000550
00225     141*      1030 FORMAT(1H0,19HHS RESERVOIR VOLUME,F12.3,                             000550
00225     142*          1            24H    DROPED BELOW MINIMUM,F12.3)                       000550
00225     143*      C                                                                         000550
00226     144*           END                                                                  000550
```

7.15 HYDRAULIC TURBINE

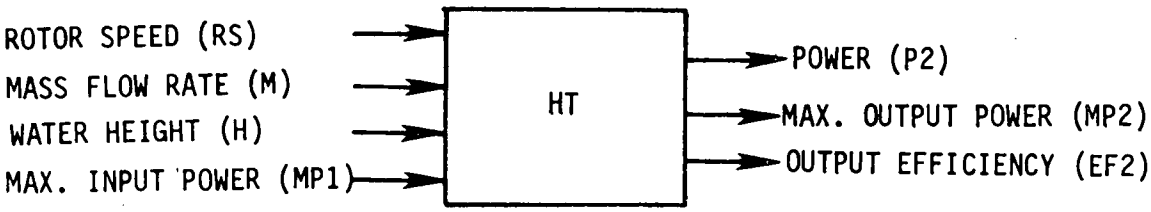

The hydraulic turbine model is based on a constant speed design and is typical of a reaction/Francis type turbine. The turbine is assumed to be designed to a specified operating point and output power.

For off design performance the pump efficiency is assumed to be functionally related to the first power of the mass flow rate. The equations are assumed to be valid over a specified range of values for the turbine parameter.

<u>Basic Equations</u>

$$P = EFF*M*C1*C2*H$$

$$EFF = 1-(1-EFD)*MD/M$$

where C1, C2 are conversion constants.

HT

Inputs

Parameter/Port		Description	Units
M		Inlet mass flow rate	gal/h
H		Height of reservoir above turbine inlet	ft
EFD		Design pt. turbine efficiency (D = 0.90)	-
MD		Design pt. mass flow rate (D = $2X10^5$)	gal/h
MM		Maximum mass flow rate (D = $3X10^5$)	gal/h
EF	1	Input product efficiency	-
MP	1	Input maximum discharge rate	kw
CK		Turbine capacity cost coefficient[1] (D = 0.011)	-
FØ		Turbine exponent for cost calculations (D = 0.5)	-
RS		Angular velocity	rpm
X		Turbine head exponent for cost calculations (D = 0.25)	-

Outputs

Variable/Port			
CCØ		Turbine cost/year	$
EFF		Turbine efficiency	-
P	2	Output power	kw
EF	2	Output product efficiency	-
MP	2	Output maximum discharge rate	kw
CP		Turbine characteristic parameter	-

Statistics

CPU	Maximum CP	-
CPL	Minimum CP	-
PU	Maximum output power	kw

D - Default values

[1] CK = Capital cost (known unit)/((MD*481.2)**FO*H**X*life expectancy)

The calculation sequence and default values assume a constant speed reaction type hydraulic turbine nominally rated for 120kw and located 200 ft. below the reservoir. The equations relating the various physical parameters are assumed to be valid for the indicated range of the characteristic turbine parameter, CP. The equations and cost estimates are based on the data given in Reference 1, and the cost estimates on data from Reference 2.

Calculation Sequence

$$C1 = 0.377 \times 10^{-6} \frac{kwh}{ft\text{-}lb}$$

$$C2 = 8.3398 \ lb/gal$$

$$A = C1*C2*H$$

1) Costs

CCØ = CK* (MD*481.2)**FØ*H**X

2) Efficiency

If M ≤ 0 set EFF = 1 and go to 3)

EFF = 1-(1-EFD)*MD/M

EFF = MAX(EFF, 0.6)

---

1. L. Marks and T. Baumeister, "Mechanical Engineers Handbook", McGraw Hill, N.Y., 1958, Section 9, p. 207.

2. Carson and Fogleman, "Comparison of Methods for Converting Existing Power Plants to Pumped Storage Facilities", International Engineering Company, Inc., 1974.

Calculation Sequence Cont.

3) Output Power

P2 = EFF*A*M

4) Product Efficiency

EF2 = EF1*EFF

EFM = MM -(1-EFD)*MD

5) Maximum Discharge Rate

MP2 = Min { MP1*EFD, EFM*A}

6) Turbine Characteristic Parameter

(If P2 ≤ 0 go to 7)

CP = RS*SQRT (P2*0.746)/H**1.25

If CP>100 write DIAGNOSTIC

If M> MM write DIAGNOSTIC

7) Compute Statistics and Costs

```
SUBROUTINE HT          ENTRY POINT 000305

STORAGE USED  CODE(1) 000430; DATA(0) 000075; BLANK COMMON(2) 000000

 COMMON BLOCKS

 0003   CIMPL   000002
 0004   CTIME   000001
 0005   CSIMUL  000010
 0006   COST    000001

EXTERNAL REFERENCES (BLOCK, NAME)

 0007   XPRR
 0010   SQRT
 0011   NWDU$
 0012   NIO2$
 0013   NERR3$

STORAGE ASSIGNMENT  (BLOCK, TYPE, RELATIVE LOCATION, NAME)

 0001   000073 100L      0000   000003 1010F     0000   000016 1020F     0001   000205 200L      0001   000231 300L
 0001   000113 400L      0006 R 000000 CCI       0000 R 000001 C1        0005   000000 DUM       0000 R 000002 EFM
 0003 I 000001 ICNT      0003 I 000000 IMPL      0000   000057 INJP$     0004 R 000000 TIME      0005 R 000007 TMAX
 0000 R 000000 TMAX1
```

```
00100      1*     CHT                                                                    000000
00101      2*          SUBROUTINE HT(CC,EFF,P,EF2,MP2,CP,CPU,CPL,PU,M,H,EFD,MD,MM        000000
00101      3*        1              ,EF1,MP1,CK,FO,RS,X)                                000000
00101      4*     C                                                                      000000
00101      5*     C   PURPOSE    PERFORMANCE OF A HYDRAULIC TURBINE                      000000
00101      6*     C                                                                      000000
00101      7*     C   METHOD     OFF DESIGN PERFORMANCE IS ASSUMED PROPORTIONAL TO       000000
00101      8*     C                                                                      000000
00101      9*     C              MASS FLOW RATE                                          000000
00101     10*     C                                                                      000000
00101     11*     C       WRITTEN BY F. O. MAHONY                VERSION 1, MARCH 30 1977 000000
00101     12*     C                                                                      000000
00101     13*     C   CALL SEQUENCE                                                      000000
00101     14*     C         OUTPUTS                                                      000000
00101     15*     C             CC  - TURBINE COST/YEAR, $                               000000
00101     16*     C             EFF - TURBINE EFFICIENCY                                 000000
00101     17*     C             P   - OUTPUT POWER, KW                                   000000
00101     18*     C             EF2 - OUTPUT PRODUCT EFFICIENCY                          000000
00101     19*     C             MP2 - OUTPUT MAXIMUM DISCHARGE RATE, KW                  000000
00101     20*     C             CP  - TURBINE CHARACTERISTIC PARAMETER                   000000
00101     21*     C             CPU - MAXIMUM CP                                         000000
```

HT

```
00101     22*     C              CPL  - MINIMUM CP                                                  000000
00101     23*     C              PU   - MAXIMUM OUTPUT POWER, KW                                    000000
00101     24*     C                                                                                 000000
00101     25*     C          INPUTS                                                                 000000
00101     26*     C              M    - INLET MASS FLOW RATE, GAL/HR                                000000
00101     27*     C              H    - HEIGHT OF RESERVOIR ABOVE TURBINE INLET, FT                 000000
00101     28*     C              EFD  - DESIGN POINT TURBINE EFFICIENCY                             000000
00101     29*     C              MD   - DESIGN POINT MASS FLOW RATE, GAL/HR                         000000
00101     30*     C              MM   - MAXIMUM MASS FLOW RATE, GAL/HR                              000000
00101     31*     C              EF1  - INPUT PRODUCT EFFICIENCY                                    000000
00101     32*     C              MP1  - INPUT MAXIMUM DISCHARGE RATE                                000000
00101     33*     C              CK   - TURBINE CAPACITY COST COEFFICIENT                           000000
00101     34*     C              FO   - TURBINE EXPONENT FOR COST CALCULATIONS                      000000
00101     35*     C              RS   - ANGULAR VELOCITY, RPM                                       000000
00101     36*     C              X    - TURBINE HEAD EXPONENT FOR COST CALCULATIONS                 000000
00101     37*     C                                                                                 000000
00103     38*           COMMON/CIMPL/IMPL,ICNT/CTIME/TIME /CSIMUL/DUM(7),TMAX /COST/ CCI            000000
00104     39*           REAL MP2,M,MD,MM,MP1                                                        000000
00104     40*     C                                                                                 000000
00105     41*           IF(IMPL.GT.0)GO TO 100                                                      000000
00105     42*     C                                                                                 000000
00107     43*           TMAX1=TMAX*0.99999                                                          000002
00110     44*           RS =3600.0                                                                  000005
00110     45*     C                                                                                 000005
00111     46*           IF(EFD.EQ. .99999)EFD=0.9                                                   000007
00113     47*           IF(MD .EQ. .99999)MD =2.0E5                                                 000014
00115     48*           IF(MM .EQ. .99999)MM =3.0E5                                                 000021
00117     49*           IF(CK .EQ. .99999)CK =0.011                                                 000026
00121     50*           IF(FO .EQ. .99999)FO =0.5                                                   000033
00123     51*           IF(X  .EQ. .99999)X  =0.25                                                  000040
00123     52*     C                                                                                 000040
00125     53*           CPL=1.0E10                                                                  000045
00126     54*           CPU=0.0                                                                     000047
00127     55*           PU =0.0                                                                     000050
00127     56*     C                                                                                 000050
00130     57*           C1 = 3.1441E-6                                                              000051
00131     58*           CC =CK*(MD*481.2)**FO*H**X                                                  000053
00131     59*     C                                                                                 000053
00131     60*     C                          EFFICIENCY                                             000053
00132     61*       100 EFF =1.0                                                                    000073
00132     62*     C                                                                                 000073
00133     63*           IF(M.LE.0.0)GO TO 400                                                       000074
00133     64*     C                                                                                 000074
00135     65*           EFF=1.0-(1.0-EFD)*MD/M                                                      000077
00136     66*           IF(EFF.LT.0.6) EFF=0.6                                                      000104
00136     67*     C                                                                                 000104
00136     68*     C                          OUTPUT POWER                                           000104
00136     69*     C                                                                                 000104
00140     70*       400 P  =EFF*M*H*C1                                                              000113
00140     71*     C                                                                                 000113
00140     72*     C                          PRODUCT EFFICIENCY                                     000113
00140     73*     C                                                                                 000113
00141     74*           EF2=EF1*EFF                                                                 000117
00141     75*     C                                                                                 000117
00141     76*     C                          MAXIMUM DISCHARGE RATE                                 000117
0014      77*     C                                                                                 000117
0014      78*           EFM =MM*.9999-(1.0-EFD)*MD                                                  000122
```

```
00142      79*      C                                                                                  000122
00143      80*            MP2=AMIN1(MP1*EFD,EFM*H*C1)                                                  000131
00143      81*      C                                                                                  000131
00143      82*      C                    TURBINE CHARACTERISTIC PARAMETER                              000131
00143      83*      C                                                                                  000131
00144      84*            IF(P .LE. 0.0) GO TO 300                                                     000142
00146      85*            CP =RS*SQRT(P*0.746)/H**1.25                                                 000144
00146      86*      C                                                                                  000144
00147      87*            IF(CP.LT.100.0)GO TO 200                                                     000162
00147      88*      C                                                                                  000162
00151      89*            IF(IMPL.EQ.2)WRITE(6,1010)CP                                                 000165
00155      90*            IF(IMPL.EQ.2) ICNT=ICNT+1                                                    000176
00155      91*      C                                                                                  000176
00157      92*        200 IF(M.LT.MM)GO TO 300                                                         000205
00157      93*      C                                                                                  000205
00161      94*            IF(IMPL.EQ.2)WRITE(6,1020)M,MM                                               000210
00166      95*            IF(IMPL.EQ.2) ICNT=ICNT+1                                                    000222
00166      96*      C                                                                                  000222
00170      97*        300 IF(IMPL.LE.1)RETURN                                                          000231
00170      98*      C                                                                                  000231
00170      99*      C                    STATISTICS                                                    000231
00170     100*      C                                                                                  000231
00172     101*            CPU=AMAX1(CPU,CP)                                                            000237
00173     102*            CPL=AMIN1(CPL,CP)                                                            000245
00174     103*            PU =AMAX1(PU ,P )                                                            000253
00174     104*      C                                                                                  000253
00175     105*            IF(TIME.LT.TMAX1)RETURN                                                      000261
00175     106*      C                                                                                  000261
00175     107*      C                    COST                                                          000261
00175     108*      C                                                                                  000261
00177     109*            CCI=CCI+CC                                                                   000270
00177     110*      C                                                                                  000270
00200     111*            RETURN                                                                       000273
00200     112*      C                                                                                  000273
00201     113*       1010 FORMAT(1H0,48HHT TURBINE CHARACTERISTIC PARAMETER OUT OF RANGE               000427
00201     114*          1 F12.3)                                                                       000427
00202     115*       1020 FORMAT(1H0,23HHT INLET MASS FLOW RATE,F12.3                                  000427
00202     116*          1           ,37H    GREATER THAN MAXIMUM DESIGN VALUE,F12.3)                   000427
00202     117*      C                                                                                  000427
00203     118*            END                                                                          000427
```

7.16 ADIABATIC HEAT EXCHANGER

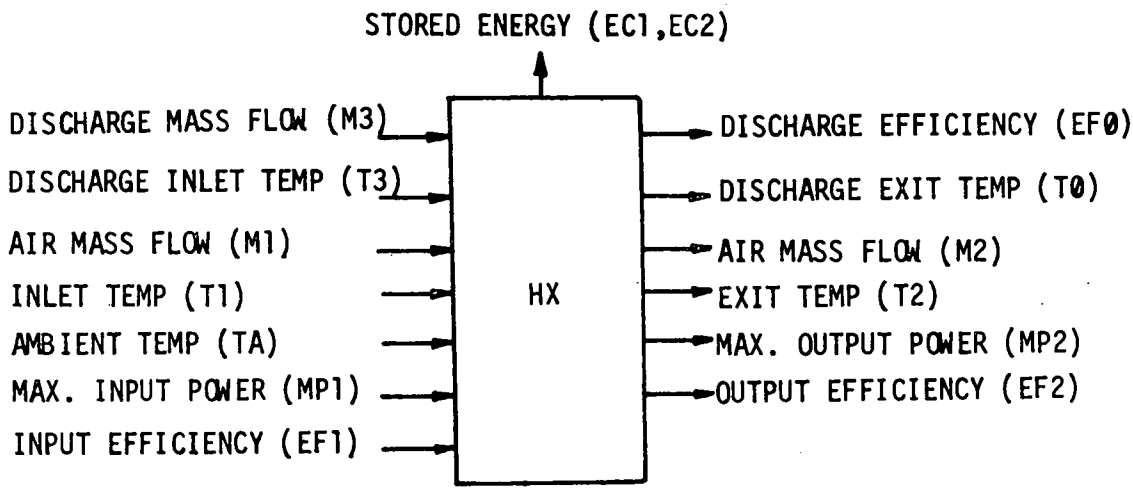

The purpose of the adiabatic heat exchanger is to recover a portion of the heat of compression from the high pressure, high temperature air exiting from the compressor. Figure 7.16-1 shows an adiabatic heat exchanger used in an underground, constant pressure compressed air energy storage system. The adiabatic heat exchanger operates in a manner similar to the high temperature thermal energy storage systems currently conceived for solar thermal power plants[1]. In the storage charging mode, high pressure, high temperature air enters the top of the heat exchanger and deposits a portion of its thermal energy in the storage media as either sensible heat or latent heat of fusion. The exiting high pressure air is stored in an appropriate vessel, e.g., underground cavern. In the discharge cycle (HY), high pressure, low temperature air enters the bottom of the heat exchanger, recovers thermal energy from the storage media and exits to the turbine.

The adiabatic heat exchanger model is based on a two cell storage model. Given the stored energy in both cells, a linear temperature profile is computed

[1] BEC/EPRI RP 788-1, "Advanced Thermal Energy Storage Systems," November 1976.

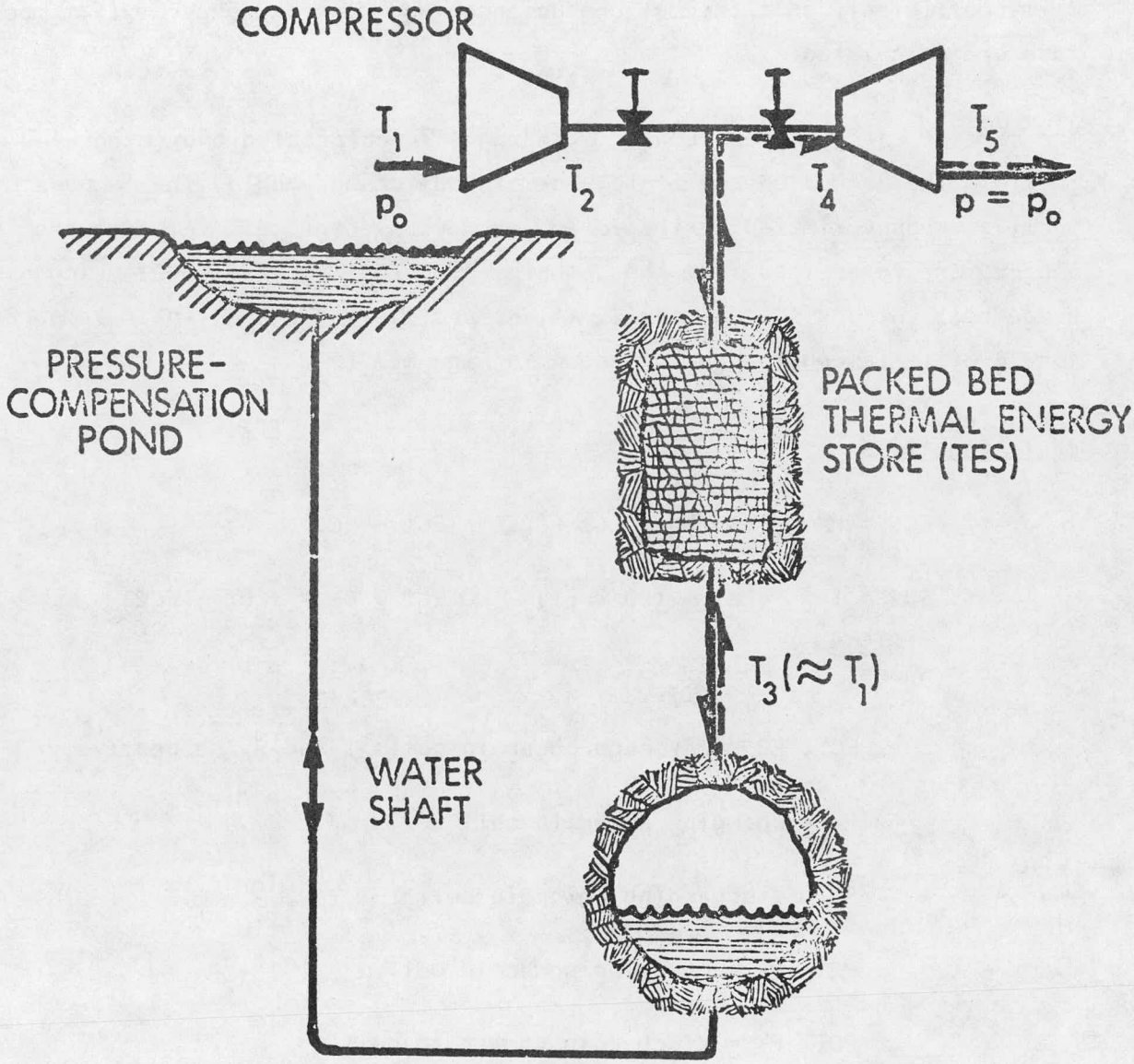

FIGURE 7.16-1 KOUTZ-GLENDENNING ADIABATIC COMPRESSED AIR STORAGE SCHEME (SINGLE-STAGE HEAT-OF-COMPRESSION STORAGE)

for the media mass. Based on a given inlet mass flow rate, the convective film coefficient, unit thermal conductance, and heat exchanger exit temperature are calculated.

The rate of energy deposited (or withdrawn) is calculated and integrated to yield the stored energy state. For a phase change media, the temperature profile is approximated in the following way: Average cell temperatures TS1 and TS2 are determined from the enthalpy diagram (Figure 7.16-2) using average cell entropy EC1/MA and EC2/MA, respectively. Then a linear temperature profile is constructed as shown in Figure 7.16-3.

Basic Equations

$$\dot{EC1} = PX - PY - NU * EC1 - BE * (EC1 - EC2)$$

$$\dot{EC2} = (P2 - PX) - (P0 - PY) - NU*EC2 + BE * (EC1 - EC2)$$

where

EC1, EC2 = storage power in cells 1 and 2, respectively

PX = charging power in cell 1

PY = discharging power in cell 1

P2 - PX = charging power in cell 2

P0 - PY = discharging power in cell 2

NU = storage media leakage constant

BE = storage media mixing constant

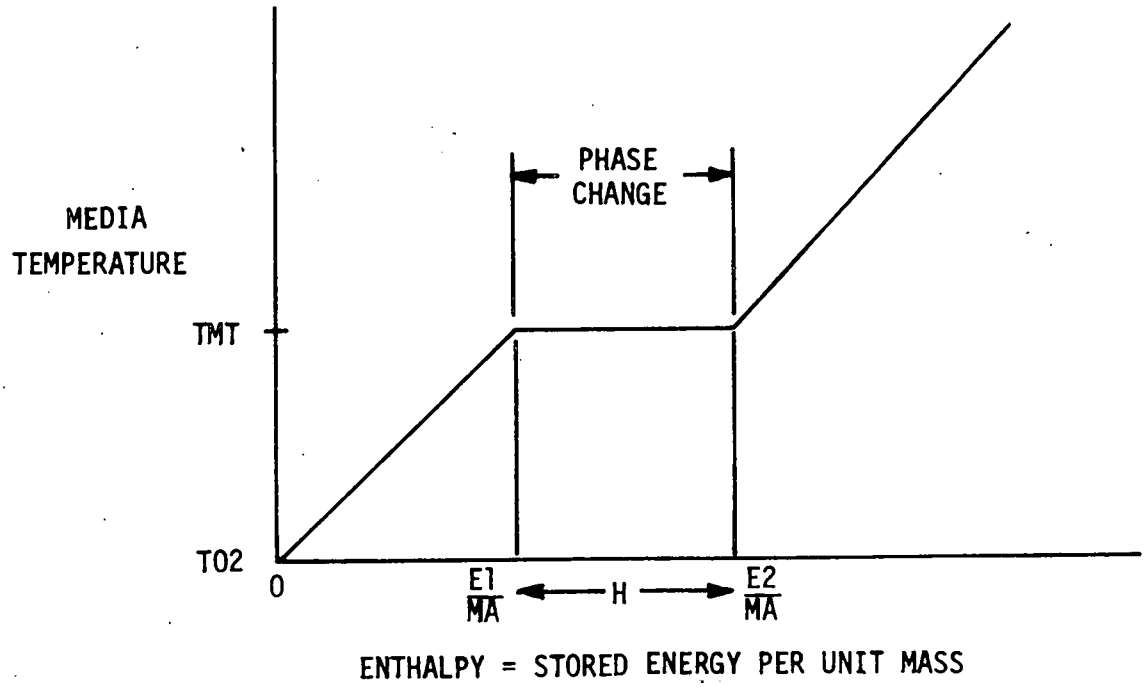

FIGURE 7.16-2: ENTHALPY-TEMPERATURE DIAGRAM FOR HX

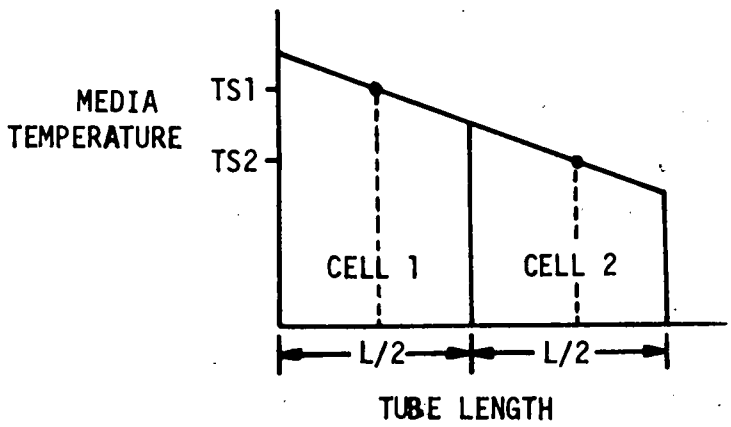

FIGURE 7.16-3: STORAGE TEMPERATURE VERSUS TUBE LENGTH

HX

Inputs

Parameter/Port		Description	Units
NU		Storage energy loss coefficient (D = 0.002)	$(h)^{-1}$
ST		Rated storage time[1]	h
BE		Storage energy mixing coefficient (D = 0.0)	h^{-1}
TØ1		Minimum allowable storage temperature (D = 60)	°F
DTD		Media temperature swing[1] (D = 400)	°F
PD		Rated storage thermal power	kw
TEM		Maximum allowable exit temperature (D = 240)	°F
XD		Design point fraction of molten media mass (D = 0.8)	-
EF	1	Input product efficiency	-
MP	1	Maximum input charging rate	kw
CP1		Storage media heat capacity (D = 2.93×10^{-4})	kwh/lb °F
H		Storage media heat of fusion[2] (D = 0.0219)	kwh/lb
TMT		Storage media melt temperature[2] (D = 147)	°F
CPF		Air heat capacity (D = 7.6×10^{-5})	kwh/lb °F
KF		Air thermal conductivity (D = 1.03×10^{-4})	kw/ft °F
MU		Air viscosity (D = 0.055)	lb/ft-h
NT		Number of tubes (D = 200)	-
D		Tube diameter (D = 0.03)	ft
L		Tube length (D = 4)	ft
DEL		Tube half spacing (D = 0.085)	ft
K		Storage media thermal conductivity (D = 0.0078)	kw/ft-°F
T	1	Inlet air temperature	°F
M	1	Inlet mass flow rate	lb/h
CM		Storage device yearly maintenance cost (D = 0.6)	$/kw
CSA		Storage device capacity cost (D = 50)	$/kw
CSB		Storage device energy cost (D = 15.6)	$/kwh
LE		Unit life expectancy	years

D - Default values specified
1 - Design point conditions
2 - Used for phase change media, H = 0 for sensible heat

HX

Inputs

Parameter/Port		Description	Units
M	3	Discharge cycle mass flow rate from storage	lb/hr
T	3	Discharge cycle temperature from storage	^oF
TA		Ambient temperature	^oF
TSØ		Storage vessel minimum temperature	^oF

Outputs

Variable/Port		Description	Units
EC1		Stored energy (state) for cell 1 (hot side)	kwh
EC2		Stored energy (state) for cell 2 (cold side)	kwh
M	2	Outlet mass flow rate (=M1)	lb/hr
MP	2	Maximum discharge rate	kw
TS1,TS2		Average temperatures for cells 1 and 2	^oF
T	2	Air exit temperature	^oF
MA		Required storage media mass	lb
CCØ		Storage device capital cost/year	$
HF		Convective heat transfer coefficient	kwh/ft^2-^oF
U		Unit thermal conductance	kwh/ft^2-^oF
P	2	Charge rate into heat exchanger	kw
E1,E2		Energy stored at start and end of melt	kwh
PM		Maximum allowable charge rate	kw
EF	2	Output product efficiency	-
RT		Thermal resistance	$^oF/kw$
PØ		Discharge power taken from heat exchanger	kw
TØ		Discharge cycle output temperature	^oF
EFØ		Discharge cycle efficiency	-

Statistics

TSU	Maximum storage temperature	^oF
TSL	Minimum storage temperature	^oF
ME	Maximum stored energy	kwh
MT	Maximum exit temperature	^oF

The default values assume use of paraffin wax as the phase change storage medium. (In reality, paraffin wax may not be applicable to temperatures as high as 600°F. The selection of a phase change medium involves careful consideration of a number of factors [see Reference 1]). The heat exchanger geometric parameters, i.e., tube number, diameter, etc., and heat exchanger cost estimates are based on the baseline phase change storage device developed in Reference 1, but scaled down to reflect expected mass flow rates and required media mass. Although these data were developed for a different application (50 MWe, 6 hour storage, average temperature = 786°C), they can be considered representative until detail design data is available.

1. "Advanced Thermal Energy Storage," BEC/EPRI RP 788-1, July 1976.

Calculation Sequence

1) Initial Calculations

$$MA = \frac{PD*ST*0.5}{XD*H+CP1*DTD}$$

CCØ = (CSA+CSB*ST)*PD/LE

E1 = MA*CP1*(TMT-TØ1)

E2 = MA*[H+CP1*(TMT-TØ1)]

T3 = TSØ=TA

A = (D*DEL+DEL**2)/5.

RB(1) = D/2, RB(I+1) = SQRT(RB(I)**2+A) I=1,5

RN(I) = SQRT((RB(I+1)**2+RB(I)**2)/2)

$$RT = \frac{D}{2*k} \sum_{i=1}^{4} LN\left(\frac{RN(I+1)}{RN(I)}\right)$$

2) Storage Temperature (see Figure 7.16-2)

$$TS = \begin{cases} TØ1 + \dfrac{E}{MA*CP1} & \text{if } E < E_1 \\ TMT & \text{if } E_1 \leq E \leq E_2 \\ TØ1 + \dfrac{\left(\dfrac{E}{MA} - H\right)}{CP1} & \text{if } E > E_2 \end{cases}$$

where TS = TS1 and E = EC1 for storage cell 1 and similarly for cell 2.

3) HX Exit Temperature Calculations

M2 = M1

P2 = 0

PX = 0

3) Cont.

$$T2 = TS2 - (TS1-TS2)/2$$

$$\Delta T = TS1-TS2$$

If M1 = 0, GO TO 7)

4) Convective Heat Transfer Coefficient[1]

$$HF = \frac{KF}{D}\left[0.0215 * \left(\frac{M1}{NT} * \frac{4}{MU*PI*D}\right)^{0.8} * \left(\frac{CPF*MU}{KF}\right)^{0.6}\right]$$

5) Thermal Conductance

$$U = \left\{\frac{1}{HF} + RT\right\}^{-1}$$

$$UA = U*PI*D*L*NT/(CPF*M1*2)$$

6) Exit Temperature and Charge Rate (See Equation A2. in Appendix)

$$TX = T1 - \Delta T -(1. - EXP(-UA))*(T1 - TS1 - \Delta T/2 - \Delta T/UA)$$

$$T2 = TX - \Delta T - (1.-EXP(-UA))*(TX - (TS1+TS2)/2-\Delta T/UA)$$

$$P2 = M1*CPF*(T1-T2)$$

$$PX = M1*CPF*(T1-TX)$$

7) HY Exit Temperature Calculations

$$T\emptyset = TS1 + \Delta T/2$$

$$P\emptyset = 0.$$

$$PY = 0.$$

If M3 = 0 GO TO 11)

---

[1] Kays, W. M., Convective Heat and Mass Transfer, McGraw Hill, N.Y., 1966, p. 173.

8) Convective Heat Transfer Coefficient

$$HF\emptyset = \frac{KF}{D}\left(.0215*\left(\frac{M3}{NT} * \frac{4}{MU*PI*D}\right)^{0.8} * \left(\frac{CPF*MU}{KF}\right)^{0.6}\right)$$

9) Thermal Conductance

$$U\emptyset = \left(\frac{1}{HF\emptyset} + RT\right)^{-1}$$

UA = UØ*PI*D*L*NT/(CPF*M3*2)

10) Exit Temperature and Discharge Rate (See Equation A3. in Appendix)

TY = T3 + ΔT - (1.-EXP(-UA))*(T3 - TS2 + ΔT/2 + ΔT/UA)

TØ = TY + ΔT - (1.-EXP(-UA))*(TY - (TS1 + TS2)/2 + ΔT/UA)

PØ = M3*CPF*(TØ-T3)

PY = M3*CPF*(TØ-TY)

11) Energy Deposited

$\dot{EC1}$ = PX - NU * EC1 - PY - BE * (EC1 - EC2)

$\dot{EC2}$ = (P2-PX) - NU * EC2 - (PØ - PY) + BE* (EC1 - EC2)

If T2 ≥ TEM, WRITE DIAGNOSTIC

12) Maximum Allowable Mass Flow Rate

MDM = PD/(CPF*DTD)

13) Maximum Allowable Charge Rate

PM = MDM * CPF * (T1-TA)

14) Charging and Discharging Efficiency

EFF = 1

If T2 > TSØ $\quad EFF = \frac{T2 - TSØ}{T1 - TA}$

EFØ = 1

If T3 > TSØ $\quad EFØ = \frac{TØ - TA}{T3 - TSØ}$

MP2 = MIN (MP1, PM) * EFF

EF2 = EF1*EFF

15) Compute Statistics and Cost Summation

Appendix: Temperature Equations for a Media with Constant Gradient

Assumptions

1) Constant Gradient Media Temperature:

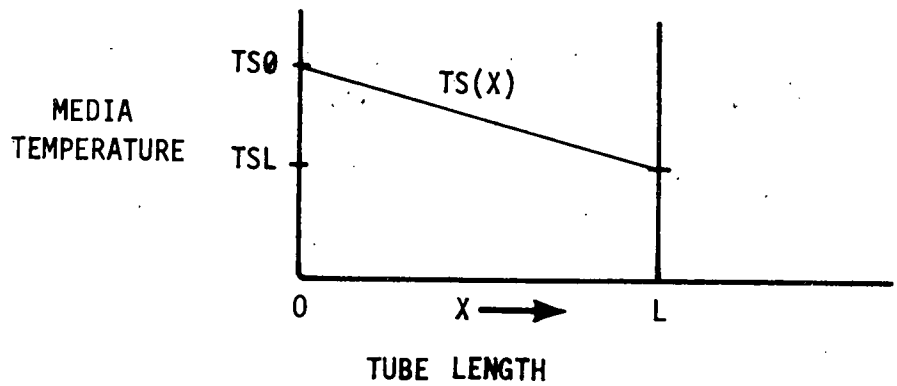

2) Working Fluid Differential Equation:

A1. $$\frac{\partial Tf}{\partial X} = \frac{UA}{L}(TS - Tf) \qquad 0 < x < L$$

Main Results: Exit temperature in the charging and discharging cycles are given by

A2. $$Tf(L) = Tf(0) + \Delta TS - (1-\exp(-UA))*\left(Tf(0) - TS\emptyset + \frac{\Delta TS}{UA}\right)$$

A3. $$Tf(0) = Tf(L) - \Delta TS - (1-\exp(-UA))*\left(Tf(L) - TSL - \frac{\Delta TS}{US}\right)$$

where $\Delta TS = TSL - TS\emptyset$.

Proof: Multiplying A1. by exp(UA·X/L) and recombining terms yields:

A4. $$\frac{\partial}{\partial X}\left(\exp(UA*X/L)*Tf\right) = \frac{UA}{L}*\exp(UA*X/L)*TS(X).$$

Integrating A4. and subsituting $TS(X) = TS\emptyset + \frac{\Delta TS}{L} * X$ yields

A5. $$Tf(X) = \exp(-UA*X/L)*Tf(0) + \frac{UA}{L}\int_0^X \exp(-UA(x-y)/L)*TS(y)dy$$

$$= \exp(-UA*X/L)Tf(0) + (1-\exp(-UA*X/L))*(TS\emptyset - \Delta TS/UA)$$

$$+ \frac{\Delta TS}{L} * X$$

Recombining terms in A5. and letting X=L yields A2. Equation A3. follows from A2. by symmetry, i.e., substitute in A2:

Tf(0) for Tf(L)

Tf(L) for Tf(0)

TSL for TSØ

TSØ for TSL.

```
SUBROUTINE HX          ENTRY POINT 001065

STORAGE USED  CODE(1) 001517; DATA(0) 000143; BLANK COMMON(2) 000000

 COMMON BLOCKS

 0003   CIMPL   000002
 0004   CTIME   000001
 0005   CSIMUL  000010
 0006   COST    000002

EXTERNAL REFERENCES (BLOCK, NAME)

 0007   SQRT
 0010   ALOG
 0011   XPRR
 0012   EXP
 0013   NWDU$
 0014   N102$
 0015   NERR3$

STORAGE ASSIGNMENT  (BLOCK, TYPE, RELATIVE LOCATION, NAME)

 0001   000301 100L      0000   000034 1010F     0001   000514 200L      0001   000236 205G      0001   000264 214G
 0001   000637 300L      0001   000714 500L      0000 R 000016 A         0006 R 000000 CCI       0006 R 000001 CMI
 0000 R 000020 DELT      0005   000000 DUM       0000 R 000033 EFF       0000 R 000030 HFO       0000 I 000017 I
 0003 I 000001 ICNT      0003 I 000000 IMPL      0000   000107 INJP$     0000 R 000000 MDM       0000 R 000014 PI
 0000 R 000023 PX        0000 R 000027 PY        0000 R 000001 RB        0000 R 000007 RN        0000 R 000025 TEMP
 0004 R 000000 TIME      0005 R 000007 TMAX      0000 R 000015 TMAX1     0000 R 000022 TSC       0000 R 000021 TSH
 0000 R 000026 TX        0000 R 000032 TY        0000 R 000024 UA        0000 R 000031 UO
```

```
00100     1*     CHX                                                                    000000
00101     2*            SUBROUTINE HX(EC1,DE1,IE1,EC2,DE2,IE2,M2,MP2,TS1,TS2,T2,MA,     000000
00101     3*           1CC,HF,U,P,E1,E2,PM,EF2,PO,TO,EFO,R,TSU,TSL,ME,MT,NU,ST,BE,TO1,DTD 000000
00101     4*           2          ,PD,TEM,XD,EF1,MP1,CP1,H,TMT,CPF,KF,MU,NT,D,L,DEL,K,T1 000000
00101     5*           3             ,M1,CM,CSA,CSB,LE,M3,T3,TA,TSO)                    000000
00101     6*     C                                                                      000000
00101     7*     C    PURPOSE   PERFORMANCE OF ADIABATIC HEAT EXCHANGER DURING CHARGE   000000
00101     8*     C                                                                      000000
00101     9*     C              CYCLE                                                   000000
00101    10*     C                                                                      000000
00101    11*     C   METHOD     HEAT STORAGE MEDIA ASSUMED TO CONTAIN NO TEMPERATURE    000000
00101    12*     C                                                                      000000
00101    13*     C              GRADIENTS. ENERGY DEPOSITED IS A FUNCTION OF TEMPERATURE 000000
00101    14*     C                                                                      000000
00101    15*     C              AND THERMAL CONDUCTANCE                                 000000
00101    16*     C                                                                      000000
```

```
C     WRITTEN BY F. O. MAHONY                    VERSION 2, JUNE 1977
C
C     CALL SEQUENCE
C          OUTPUTS
C               EC1 - STORED ENERGY (STATE ) FOR STORAGE CELL 1, KWH
C               DE1 - ENERGY RATE FOR EC1, KW
C               IE1 - STATUS INDICATOR FOR EC1
C               EC2 - STORED ENERGY STATE FOR STORAGE CELL 2, KWH
C               DE2 - ENERGY RATE FOR EC2, KW
C               IE2 - STATUS INDICATOR FOR EC2
C               M2  - OUTLET MASS FLOW RATE, LB/HR
C               MP2 - MAXIMUM DISCHARGE RATE ALLOWABLE, KW
C               TS1 - STORAGE TEMPERATURE IN CELL 1, DEG F
C               TS2 - STORAGE TEMPERATURE IN CELL 2, DEG F
C               T2  - AIR EXIT TEMPERATURE, DEG F
C               MA  - REQUIRED STORAGE MEDIA MASS  LB
C               CC  - STORAGE DEVICE CAPITAL COST/YEAR, $
C               HF  - CONVECTIVE HEAT TRANSFER COEFFICIENT, KWH/FT2-F
C               U   - UNIT THERMAL CONDUCTANCE, KWH/FT2-F
C               P   - CHARGE RATE OF HEAT EXCHANGER
C               E1  - ENERGY STORED AT START OF MELT PHASE, KWH
C               E2  - ENERGY STORED AT END OF MELT PHASE, KWH
C               PM  - MAXIMUM ALLOWABLE CHARGE RATE, KW
C               EF2 - OUTPUT PRODUCT EFFICIENCY
C               PO  - DISCHARGE POWER TAKEN FROM HEAT EXCHANGER, KW
C               TO  - DISCHARGE CYCLE OUTPUT TEMPERATURE, DEG F
C               EFO - DISCHARGE CYCLE EFFICIENCY
C               R   - THERMAL RESISTANCE, DEG F/KW
C
C          STATISTICS
C               TSU - MAXIMUM STORAGE TEMPERATURE, DEG F
C               TSL - MINIMUM STORAGE TEMPERATURE, DEG F
C               ME  - MAXIMUM STORED ENERGY, KWH
C               MT  - MAXIMUM EXIT TEMPERATURE, DEG F
C
C          INPUTS
C               NU  - STORAGE ENERGY LOSS COEFFICIENT
C               ST  - RATED STORAGE TIME, HR
C               BE  - STORAGE ENERGY MIXING COEFFICIENT, 1/HR
C               TO1 - MINIMUM ALLOWABLE STORAGE TEMPERATURE, DEG F
C               DTD - MEDIA TEMPERATURE SWING, DEG F
C               PD  - RATED THERMAL STORAGE POWER, KW
C               TEM - MAXIMUM ALLOWABLE EXIT TEMPERATURE, DEG F
C               XD  - DESIGN POINT FRACTION OF MOLTEN MEDIA MASS
C               EF1 - INPUT PRODUCT EFFICIENCY
C               MP1 - MAXIMUM INPUT CHARGING RATE
C               CP1 - STORAGE MEDIA HEAT CAPACITY, KWH/LB-F
C               H   - STORAGE MEDIA HEAT OF FUSION, KWH/LB
C               TMT - STORAGE MEDIA MELT TEMPERATURE, DEG F
C               CPF - AIR HEAT CAPACITY, KWH/LB-F
C               KF  - AIR THERMAL CONDUCTIVITY, KWH/FT-F
C               MU  - AIR VISCOSITY, LB/FT-HR
C               NT  - NUMBER OF H/X TUBES
C               D   - TUBE DIAMETER, FT
C               L   - TUBE LENGTH, FT
C               DEL - TUBE HALF SPACING, FT
C               K   - STORAGE MEDIA THERMAL CONDUCTIVITY
```


HX

```
00101      74*     C              T1  - INLET AIR TEMPERATURE, DEG F                                  000000
00101      75*     C              M1  - INLET MASS FLOW RATE, LB/HR                                   000000
00101      76*     C              CM  - STORAGE DEVICE YEARLY MAINTENANCE COST $/KW                   000000
00101      77*     C              CSA - STORAGE DEVICE CAPACITY COST, $/KW                            000000
00101      78*     C              CSB - STORAGE DEVICE ENERGY COST, $/KWH                             000000
00101      79*     C              LE  - UNIT LIFE EXPECTANCY, YEARS                                   000000
00101      80*     C              M3  - DISCHARGE CYCLE MASS FLOW RATE FROM CS, LB/HR                 000000
00101      81*     C              T3  - DISCHARGE CYCLE TEMPERATURE FROM CS, DEG F                    000000
00101      82*     C              TA  - AMBIENT TEMPERATURE, DEG F                                    000000
00101      83*     C              TSO - STORAGE VESSEL MINIMUM TEMPERATURE FROM CS, DEG F             000000
00101      84*     C                                                                                  000000
00103      85*            COMMON /CIMPL/IMPL,ICNT/CTIME/TIME /CSIMUL/DUM(7),TMAX                      000000
00104      86*            COMMON /COST/ CCI,CMI                                                       000000
00105      87*            REAL M3,MDM,NU,M2,MP2,MA,ME,MT,MP1,MU,NT,M1,LE,KF,K,L                       000000
00106      88*            DIMENSION RR(6),RN(5)                                                       000000
00107      89*            DATA PI/3.14159/                                                            000000
00107      90*     C                                                                                  000000
00111      91*            IF(IMPL.GT.0)GO TO 100                                                      000000
00111      92*     C                                                                                  000000
00113      93*            IF(NU .EQ. .99999)NU =0.002                                                 000002
00115      94*            IF(BE .EQ. .99999)BE = 0.0                                                  000007
00117      95*            IF(T01.EQ. .99999)T01=60.0                                                  000013
00121      96*            IF(DTD.EQ. .99999)DTD=400.0                                                 000020
00123      97*            IF(TEM.EQ. .99999)TEM=240.0                                                 000025
00125      98*            IF(CP1.EQ. .99999)CP1=2.93E-4                                               000032
00127      99*            IF(H  .EQ. .99999)H  =2.188E-2                                              000037
00131     100*            IF(XD .EQ. .99999)XD =0.8                                                   000044
00133     101*            IF(TMT.EQ. .99999)TMT=147.0                                                 000051
00135     102*            IF(CPF.EQ. .99999)CPF=7.6E-5                                                000056
00137     103*            IF(KF .EQ. .99999)KF =1.03E-4                                               000066
00141     104*            IF(MU .EQ. .99999)MU =0.055                                                 000073
00143     105*            IF(NT .EQ. .99999)NT =200.0                                                 000100
00145     106*            IF(D  .EQ. .99999)D  =3.0E-2                                                000105
00147     107*            IF(L  .EQ. .99999)L  =4.0                                                   000112
00151     108*            IF(DEL.EQ. .99999)DEL=8.5E-2                                                000117
00153     109*            IF(K  .EQ. .99999)K  =7.8E-3                                                000124
00155     110*            IF(CM .EQ. .99999)CM =0.6                                                   000131
00157     111*            IF(CSA.EQ. .99999)CSA=50.0                                                  000136
00161     112*            IF(CSB.EQ. .99999)CSB=15.6                                                  000143
00161     113*     C                                                                                  000143
00163     114*            TSL=1.0E8                                                                   000150
00164     115*            PO=0.0                                                                      000152
00165     116*            PM= 0.0                                                                     000153
00166     117*            TSU=0.0                                                                     000154
00167     118*            ME=0.0                                                                      000155
00170     119*            MT=0.0                                                                      000156
00171     120*            M3=0.0                                                                      000157
00172     121*            T3=TA                                                                       000160
00173     122*            TSO=TA                                                                      000162
00174     123*            MA =PD*0.5*ST/(XD*H*CP1*DTD)                                                000163
00175     124*            CC =(CSA+CSB*ST)*PD/LE                                                      000175
00176     125*            CM= CM*PD                                                                   000203
00177     126*            E1 =MA*CP1*(TMT-T01)                                                        000206
00200     127*            E2 =MA*(H+CP1*(TMT-T01))                                                    000211
00201     128*            TMAX1=TMAX*0.99999                                                          000216
00202     129*            A  =(D*DEL+DEL**2)/5.0                                                      000221
00202     130*     C                                                                                  000221
```

```
00202     131*      C                    COMPUTE THERMAL RESISTANCE OF MEDIA                    000221
00202     132*      C                                                                           000221
00203     133*            RB(1)=D/2.0                                                           000230
00203     134*      C                                                                           000230
00204     135*            DO 20 I=1,5                                                           000236
00207     136*            RB(I+1)=SQRT(RB(I)**2+A)                                              000236
00210     137*         20 RN(I)=SQRT((RB(I+1)**2+RB(I)**2)/2.0)                                 000245
00210     138*      C                                                                           000245
00212     139*            R=0.0                                                                 000260
00212     140*      C                                                                           000260
00213     141*            DO 30 I=1,4                                                           000264
00216     142*         30 R=R+ALOG(RN(I+1)/RN(I))                                               000264
00216     143*      C                                                                           000264
00220     144*            R=R*D/2.0/K                                                           000274
00220     145*      C                                                                           000274
00220     146*      C                    STORAGE TEMPERATURES                                   000274
00220     147*      C                                                                           000274
00221     148*        100 TS1=TMT                                                               000301
00221     149*      C                                                                           000301
00222     150*            IF(EC1.LT.E1) TS1= TO1+ EC1/(MA*CP1)                                  000302
00224     151*            IF(EC1.GT.E2) TS1= TO1+ (EC1/MA - H)/CP1                              000315
00226     152*            TS2=TMT                                                               000327
00227     153*            IF(EC2.LT.E1)TS2= TO1+ EC2/(MA*CP1).                                  000331
00231     154*            IF(EC2.GT.E2) TS2= TO1+ (EC2/MA - H)/CP1                              000341
00231     155*      C                                                                           000341
00233     156*            DELT= TS1 - TS2                                                       000353
00234     157*            TSH= TS1+ .5*DELT                                                     000356
00235     158*            TSC= TS2 - .5*DELT                                                    000362
00235     159*      C                                                                           000362
00236     160*            T2= TSC                                                               000365
00237     161*            M2=M1                                                                 000366
00240     162*            P =0.0                                                                000370
00241     163*            PX=0.0                                                                000371
00242     164*            U=1.0/R                                                               000372
00242     165*      C                                                                           000372
00243     166*            IF(M1.LT.0.001)GO TO 200                                              000375
00243     167*      C                                                                           000375
00243     168*      C                    CONVECTIVE HEAT TRANSFER COEFFICIENT                   000375
00243     169*      C                                                                           000375
00245     170*            HF =KF/D*(0.0215*(M1/NT*4.0/MU/PI/D)**0.8*(CPF*MU/KF)**0.6)           000400
00245     171*      C                                                                           000400
00245     172*      C                    UNIT THERMAL CONDUCTANCE                               000400
00245     173*      C                                                                           000400
00246     174*            U = 1.0/(1.0/HF+R)                                                    000432
00247     175*            UA= U*PI*D*L*NT/(M1*CPF*2.)                                           000440
00250     176*            TEMP= DELT/UA                                                         000452
00251     177*            UA= 1. - EXP(-UA)                                                     000455
00251     178*      C                                                                           000455
00251     179*      C                    EXIT TEMPERATURE                                       000455
00251     180*      C                                                                           000455
00252     181*            TX= T1 - DELT - UA*(T1-TSH-TEMP)                                      000463
00253     182*            T2= TX- DELT - UA*(TX-(TS1+TS2)*.5-TEMP)                              000473
00253     183*      C                                                                           000473
00253     184*      C                    CHARGE RATE                                            000473
00257     185*      C                                                                           000473
0025      186*            P =M1*CPF*(T1-T2)                                                     000504
0025      187*            PX = M1*CPF*(T1-TX)                                                   000507
```

```
00255     188*      C                                                                    000507
00255     189*      C                    HY EXIT TEMPERATURE CALCULATIONS                000507
00255     190*      C                                                                    000507
00256     191*        200 TO = TSH                                                       000514
00257     192*            PO =0.0                                                        000515
00260     193*            PY=0.0                                                         000516
00261     194*            IF(M3.LT. .001)GO TO 300                                       000517
00261     195*      C                                                                    000517
00261     196*      C                    CONVECTIVE HEAT TRANSFER COEFFICIENT            000517
00261     197*      C                                                                    000517
00263     198*            HFO =KF/D*(0.0215*(M3/NT*4.0/MU/PI/D)**0.8*(CPF*MU/KF)**0.6)   000523
00263     199*      C                                                                    000523
00263     200*      C                    UNIT THERMAL CONDUCTANCE                        000523
00263     201*      C                                                                    000523
00264     202*            UO=1.0/(1.0/HFO+R)                                             000555
00265     203*            UA= UO*PI*D*L*NT/(M3*CPF*2.)                                   000563
00266     204*            TEMP= DELT/UA                                                  000575
00267     205*            UA= EXP(-UA) - 1.                                              000600
00267     206*      C                                                                    000600
00267     207*      C                    EXIT TEMPERATURE AND DISCHARGE RATE             000600
00267     208*      C                                                                    000600
00270     209*            TY= T3+ DELT+ UA*(T3-TSC+TEMP)                                 000606
00271     210*            TO= TY+ DELT + UA*(TY-(TS1+TS2)*.5+TEMP)                       000616
00272     211*            PO =M3*CPF*(TO-T3)                                             000627
00273     212*            PY= M3*CPF*(TO-TY)                                             000632
00273     213*      C                                                                    000632
00273     214*      C                    ENERGY DEPOSITED                                000632
00273     215*      C                                                                    000632
00273     216*      C                                                                    000632
00274     217*        300 IF(IE1.NE.0) DE1= PX- PY -NU*EC1 -BE*(EC1-EC2)                 000637
00276     218*            IF(IE2.NE.0) DE2= P-PX - (PO-PY) -NU*EC2 +BE*(EC1-EC2)         000653
00276     219*      C                                                                    000653
00300     220*            IF (T2.LT.TEM) GO TO 500                                       000667
00300     221*      C                                                                    000667
00302     222*            IF(IMPL.EQ.2)WRITE(6,1010)T2,TEM                               000673
00307     223*            IF(IMPL.EQ.2)ICNT=ICNT+1                                       000705
00307     224*      C                                                                    000705
00307     225*      C                    MAXIMUM ALLOWABLE CHARGE AND FLOW RATES         000705
00307     226*      C                                                                    000705
00311     227*        500 MDM= PO/(CPF*DTO)                                              000714
00311     228*      C                                                                    000714
00312     229*            PM =MDM*CPF*(T1-TA)                                            000720
00312     230*      C                                                                    000720
00312     231*      C                     CHARGING AND DISCHARGING EFFICIENCY            000720
00312     232*      C                                                                    000720
00313     233*            EFF=1.0                                                        000726
00313     234*      C                                                                    000726
00314     235*            IF(T2.GE.TSO)EFF=(T2-TSO)/(T1-TA)                              000730
00314     236*      C                                                                    000730
00316     237*            EFO =1.0                                                       000740
00316     238*      C                                                                    000740
00317     239*            IF(T3.GT.TSO)EFO=(TO-TA)/(T3-TSO)                              000742
00317     240*      C                                                                    000742
00321     241*            MP2=AMIN1(MP1,PM)*EFF                                          000754
00321     242*      C                                                                    000754
00322     243*            EF2=EF1*EFF                                                    000763
00322     244*      C                                                                    000763
```

```
00322     245*      C                                                                                  000763
00322     246*      C                          STATISTICS                                              000763
00322     247*      C                                                                                  000763
00323     248*                IF(IMPL.LE.1)RETURN                                                      000766
00323     249*      C                                                                                  000766
00325     250*                TSU =AMAX1(TSU,TS1)                                                      000775
00326     251*                TSL =AMIN1(TSL,TS2)                                                      001003
00327     252*                ME = AMAX1(ME, EC1+EC2)                                                  001011
00330     253*                MT  =AMAX1(MT ,T2)                                                       001020
00330     254*      C                                                                                  001020
00331     255*                IF(TIME.LT.TMAX1)RETURN                                                  001026
00331     256*      C                                                                                  001026
00333     257*                CCI =CCI+CC                                                              001035
00334     258*                CMI=CMI+CM                                                               001040
00335     259*                CM= CM/PD                                                                001043
00335     260*      C                                                                                  001043
00336     261*                RETURN                                                                   001046
00336     262*      C                                                                                  001046
00337     263*       1010 FORMAT(1H0,22HHX    EXIT TEMPERATURE ,F12.3                                 001516
00337     264*           1            ,35H   GREATER THAN MAXIMUM ALLOWABLE   ,F12.3)                  001516
00337     265*      C                                                                                  001516
00340     266*                END                                                                      001516
```

7.17 ADIABATIC HEAT EXCHANGER - DISCHARGING CYCLE

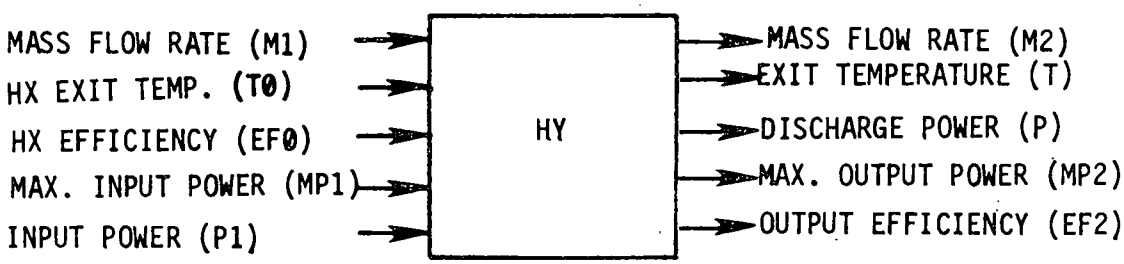

HY is the discharge cycle complement to HX. All the calculations to obtain the exit temperature and heat exchange power deposited or withdrawn are done in HX. The results are then passed to HY for summary.

Inputs

Parameter/Port		Description	Units
M	1	Air mass flow rate from storage	lb/hr
TØ		Exit temperature from HX	°F
P	1	Discharge power from storage	kw
EFØ		Discharge cycle efficiency from HX	-
MP	1	Maximum power from storage	kw

Outputs

Variable/Port			
M	2	Exit air mass flow rate (=M1)	lb/hr
T		Exit temperature (=TØ)	°F
P	2	Discharge power	kw
MP	2	Maximum discharge power	kw
EF	2	Output product efficiency	-

Statistics

TL	Minimum exit temperature	°F
TU	Maximum exit temperature	°F
SP	Total energy discharged	kwh

Calculation Sequence

1) M2 = M1

T = TØ

MP2 = MP1*EFØ

EF2 = EFØ

P2 = P1*EFØ

2) Compute Statistics

```
SUBROUTINE HY        ENTRY POINT 000064

STORAGE USED  CODE(1) 000135; DATA(0) 000017; BLANK COMMON(2) 000000

 COMMON BLOCKS

 0003   CIMPL  000001
 0004   CSIMUL 000007

EXTERNAL REFERENCES (BLOCK, NAME)

 0005   NERR3$

STORAGE ASSIGNMENT  (BLOCK, TYPE, RELATIVE LOCATION, NAME)

 0001   0C0007 100L      0004   000000 DUM       0003 I 000000 IMPL      0000   000002 INJP$     0004 R 000006 TINC


00100      1*     CHY                                                                    000000
00101      2*            SUBROUTINE HY(M2,T,P2,MP2,EF2,TL,TU,SP,M1,TO,P1,EFO,MP1)        000000
00101      3*     C                                                                      000000
00101      4*     C    PURPOSE   PERFORMANCE OF ADIABATIC HEAT EXCHANGER DURING DISCHARGE 000000
00101      5*     C                                                                      000000
00101      6*     C              CYCLE                                                   000000
00101      7*     C                                                                      000000
00101      8*     C    METHOD    COMPUTE EXIT CONDITIONS USING HEAT EXCHANGER STATE      000000
00101      9*     C                                                                      000000
00101     10*     C              DETERMINED IN HX                                        000000
00101     11*     C                                                                      000000
00101     12*     C    WRITEN BY F. O. MAHONY                  VERSION 1, MARCH 27 1977  000000
00101     13*     C                                                                      000000
00101     14*     C    CALL SEQUENCE                                                     000000
00101     15*     C         OUTPUTS                                                      000000
00101     16*     C              M2  - EXIT AIR MASS FLOW RATE (=M1), LB/HR              000000
00101     17*     C              T   - EXIT TEMPERATURE (=TO), DEG F                     000000
00101     18*     C              P2  - TOTAL DISCHARGE POWER, KW                         000000
00101     19*     C              MP2 - MAXIMUM DISCHARGE POWER, KW                       000000
00101     20*     C              EF2 - OUTPUT PRODUCT EFFICIENCY                         000000
00101     21*     C                                                                      000000
00101     22*     C         STATISTICS                                                   000000
00101     23*     C              TL  - MINIMUM EXIT TEMPERATURE, DEG F                   000000
00101     24*     C              TU  - MAXIMUM EXIT TEMPERATURE, DEG F                   000000
00101     25*     C              SP  - TOTAL ENERGY DISCHARGED, KWH                      000000
00101     26*     C                                                                      000000
00101     27*     C         INPUTS                                                       000000
00101     28*     C              M1  - AIR MASS FLOW RATE FROM STORAGE, LB/HR            000000
00101     29*     C              TO  - EXIT TEMPERATURE FROM HX, DEG F                   000000
00101     30*     C              P1  - DISCHARGE POWER FROM STORAGE, KW                  000000
```

```
00101      31*      C              EFO - DISCHARGE CYCLE EFFICIENCY                    000000
00101      32*      C              MP1 - MAXIMUM POWER FROM STORAGE, KW                000000
00101      33*      C                                                                  000000
00103      34*               COMMON /CIMPL/IMPL /CSIMUL/DUM(6),TINC                    000000
00103      35*      C                                                                  000000
00104      36*            REAL M2,MP2,M1,MP1                                           000000
00104      37*      C                                                                  000000
00105      38*            IF(IMPL.GT.0)GO TO 100                                       000000
00105      39*      C                                                                  000000
00107      40*            TU =0.0                                                      000002
00110      41*            SP =0.0                                                      000003
00110      42*      C                                                                  000003
00111      43*            TL =1.0E10                                                   000004
00112      44*        100 M2 =M1                                                       000007
00113      45*            T  =T0                                                       000010
00114      46*            P2 =P1*EFO                                                   000012
00115      47*            MP2=MP1*EFO                                                  000015
00116      48*            EF2=EFO                                                      000020
00116      49*      C                                                                  000020
00117      50*            IF(IMPL.LE.1)RETURN                                          000022
00117      51*      C                                                                  000022
00121      52*            TL =AMIN1(TL ,T )                                            000031
00122      53*            TU =AMAX1(TU ,T )                                            000037
00122      54*      C                                                                  000037
00123      55*            SP =SP +P2*TINC/2.0                                          000045
00123      56*      C                                                                  000045
00124      57*            RETURN                                                       000052
00125      58*            END                                                          000134
```

7.18 INTEGRATOR WITH SATURATION

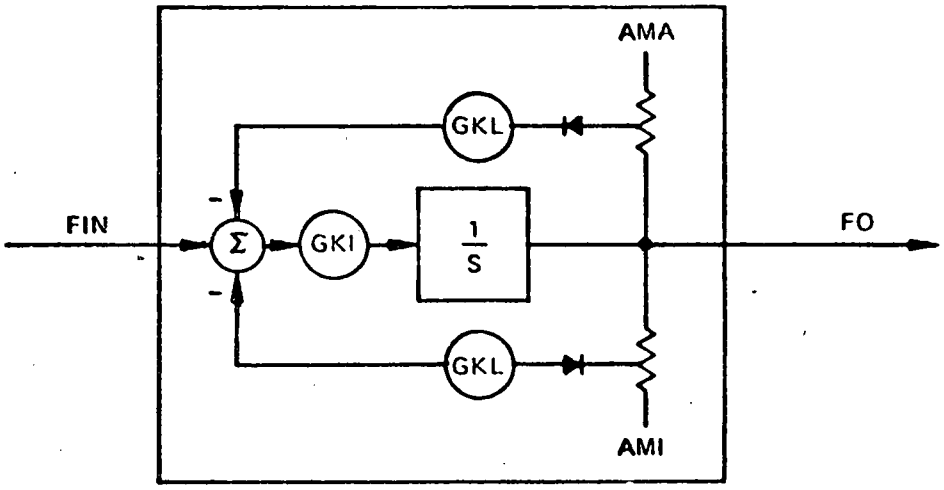

Inputs

Parameter/Port	Description
FIN	Input
GKI	Integration gain
GKL	Saturation limiter gain
AMA	Upper limit of output (Default = 10^{36})
AMI	Lower limit of output (Default = -10^{36})

Outputs

Variable/Port	
FØ	Output (state)

Calculation Sequence

$$\dot{F\emptyset} = GKI * [FIN - GKL * (F\emptyset - AMA)] \quad \text{if} \quad F\emptyset > AMA$$

$$\dot{F\emptyset} = GKI * FIN \quad \text{if} \quad AMI \leq F\emptyset \leq AMA$$

$$\dot{F\emptyset} = GKI * [FIN - GKL * (F\emptyset - AMI)] \quad \text{if} \quad F\emptyset < AMI$$

```
SUBROUTINE IT        ENTRY POINT 000051

STORAGE USED  CODE(1) 000067; DATA(0) 000007; BLANK COMMON(2) 000000

EXTERNAL REFERENCES (BLOCK, NAME)

 0003   NEPR3$

STORAGE ASSIGNMENT  (BLOCK, TYPE, RELATIVE LOCATION, NAME)

 0000 R 000000 EPS        0000   000003 INJPS


00100      1*      CIT                                                                    000000
00101      2*            SUBROUTINE IT(FO,FODOT,IFO,FIN,GKI,GKL,AMA,AMI)                  000000
00101      3*      C  VERSION 2.                        REVISED  OCT 8 1976               000000
00101      4*      C                                                                      000000
00101      5*      C   PURPOSE - SIMULATION OF AN INTEGRATOR WITH SATURATION              000000
00101      6*      C                                                                      000000
00101      7*      C                                                                      000000
00101      8*      C   METHOD  - SEE CODING                                               000000
00101      9*      C                                                                      000000
00101     10*      C                                                                      000000
00101     11*      C   LIMITATIONS - EXCESSIVELY HIGH VALUES OF GKL MAY RESULT IN POOR    000000
00101     12*      C                 STEADY STATE CONVERGENCE                             000000
00101     13*      C                                                                      000000
00101     14*      C                                                                      000000
00101     15*      C   WRITTEN BY  - ADAM LLOYD                LATEST REVISION - NOV 75   000000
00101     16*      C                                                                      000000
00101     17*      C                                                                      000000
00101     18*      C   INPUT/OUTPUT LIST                                                  000000
00101     19*      C                                                                      000000
00101     20*      C   FO         INTEGRATOR OUTPUT            ANY          OUTPUT STATE  000000
00101     21*      C   FODOT      OUTPUT DERIVATIVE            ANY          OUTPUT DERIV  000000
00101     22*      C   IFO        INTEGRATOR CONTROL           ---          PROGRAM VAR   000000
00101     23*      C   FIN        FUNCTION INPUT               ANY          INPUT  VAR    000000
00101     24*      C   GKI        INTEGRATOR GAIN              ANY          INPUT  PARAM  000000
00101     25*      C   GKL        DERIVATIVE LIMITER GAIN      ANY          INPUT  PARAM  000000
00101     26*      C   AMA        UPPER LIMIT OF OUTPUT        ANY          INPUT  PARAM  000000
00101     27*      C              WHERE DERIV. LIMITER STARTS                             000000
00101     28*      C   AMI        LOWER LIMIT OF OUTPUT        ANY          INPUT  PARAM  000000
00101     29*      C              WHERE DERIV. LIMITER STARTS                             000000
00103     30*            EPS=FIN                                                          000000
00103     31*      C  ------------  PROVIDE DEFAULTS THAT ELLIMINATE SATURATION           000000
00104     32*            IF(AMA.EQ..99999)AMA=1.E36                                       000001
00[illegible]  33*            IF(AMI.EQ..99999)AMI=-1.E36                                 000006
00[illegible]  34*            IF(FO.GT.AMA)EPS = FIN - GKL*(FO-AMA)                       000013
00[illegible]  35*            IF(FO.LT.AMI)EPS = FIN - GKL*(FO-AMI)                       000024
```

```
00114     36*          IF(IFO.NE.0)FODOT=GKI*EPS                    000035
00116     37*          RETURN                                       000042
00117     38*          END                                          000066
```

7.19 DC-AC INVERTER

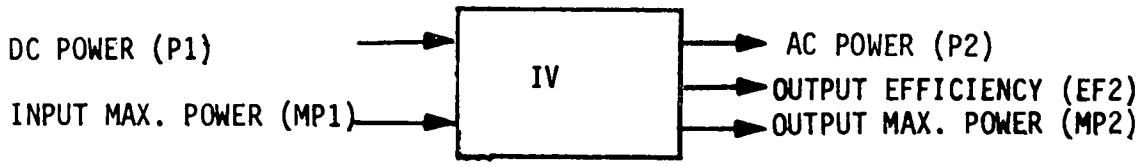

This component models a solid state inverter/transformer. Power losses due to resistive heating and contact potential loss are modeled. A step-up transformer may also be needed to boost output voltage up to that of the bus. Default parameter values are based on rated power = 200 kw.

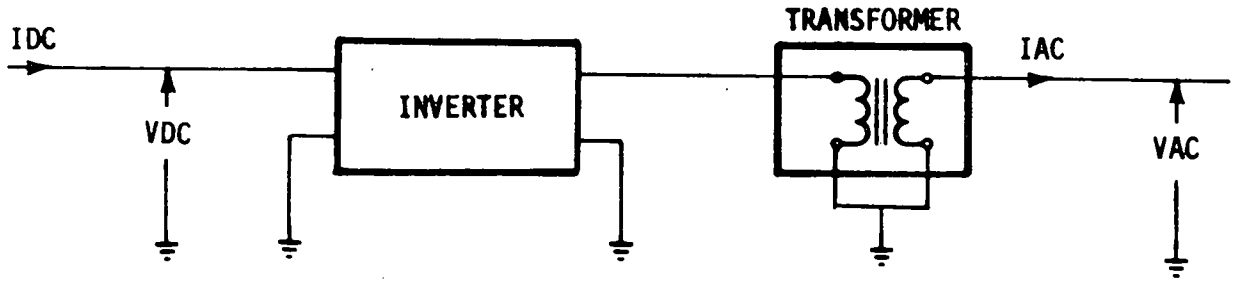

FIGURE 7.19 INVERTER FUNCTIONAL DIAGRAM

Inputs

Parameter/Port		Description	Units
P	1	DC input power	kw
RT		Transformer resistance (D = 0)	ohms
VDC		Rated DC voltage (D = 100)	volts
DI		Inverter contact potential (D = 0)	volts
RI		Inverter resistance (D = 0.005)	ohms
RAP		Rated input power	kw
EF	1	Input product efficiency	-
MP	1	Maximum input power	kw
CC		Inverter cost/year	$

Outputs

Variable/Port			
P	2	AC output power	kw
IDC		DC input current	amps
PL		Power loss	kw
EF	2	Output product efficiency	-
MP	2	Maximum output power	kw

D - Default values supplied.

Calculation Sequence

If $P1 \leq 0$, $P2 = IDC = PL = 0$, $EFF = 1$ and go to 3)

1) Input and output current

$IDC = P1*1000/VDC$

$IAC = \sqrt{6}*IDC/\pi$

2) Power loss and output power

$PL = (IDC*(DI+RI*IDC) + \sqrt{3}*RT*IAC^2)/1000$

$P2 = P1 - PL$

$EFF = P2/P1$

$P2 \leq 0$ ⇨ Diagnostic, $EFF = 1$

3) Efficiency and maximum power

$EF2 = EF1*EFF$

$MP2 = MIN(MP1,RAP)*EFF$

4) Compute Costs

```
SUBROUTINE IV          ENTRY POINT 000175

STORAGE USED  CODE(1) 000261; DATA(0) 000046; BLANK COMMON(2) 000000

 COMMON BLOCKS

 0003   CIMPL   000002
 0004   CTIME   000001
 0005   CSIMUL  000010
 0006   COST    000001

EXTERNAL REFERENCES (BLOCK, NAME)

 0007   SQRT
 0010   NWDU$
 0011   NIO2$
 0012   NERR3$

STORAGE ASSIGNMENT  (BLOCK, TYPE, RELATIVE LOCATION, NAME)

 0001   000030 100L      0001   000047 200L      0000   000004 208F      0001   000145 400L      0006 R 000000 CCI
 0005   000000 DUM       0000 R 000003 EFF       0000 R 000000 IAC       0003 I 000001 ICNT      0003 I 000000 IMPL
 0000   000034 INJP$     0000 R 000001 PI        0004 R 000000 TIME      0005 R 000007 TMAX      0000 R 000002 TMAX1
```

```
00100     1*     CTV                                                                    000000
00101     2*            SUBROUTINE IV(P2,IDC,PL,EF2,MP2,P1,RT,VDC,DI,RI,RAP,EF1,MP1,CC)  000000
00101     3*     C                                                                      000000
00101     4*     C              PURPOSE   SOLID STATE INVERTER/TRANSFORMER MODEL        000000
00101     5*     C                                                                      000000
00101     6*     C              METHOD    COMPUTE AC POWER AS A FUNCTION OF            000000
00101     7*     C                        INPUT DC POWER                                000000
00101     8*     C                                                                      000000
00101     9*     C              WRITTEN BY  Y.K.CHAN      VERSION 1, JUNE 2, 1977       000000
00101    10*     C                                                                      000000
00101    11*     C   CALL SEQUENCE                                                      000000
00101    12*     C              OUTPUTS                                                 000000
00101    13*     C              P2  -AC OUTPUT POWER, KW                                000000
00101    14*     C              IDC -DC INPUT CURRENT, AMPS                             000000
00101    15*     C              PL  -POWER LOSS, KW                                     000000
00101    16*     C              EF2 -OUTPUT POWER EFFICIENCY                            000000
00101    17*     C              MP2 -MAXIMUM OUTPUT POWER, KW                           000000
00101    18*     C         INPUTS                                                       000000
00101    19*     C              P1  -DC INPUT POWER, KW                                 000000
00101    20*     C              RT  -TRANSFORMER RESISTANCE, OHMS                       000000
00101    21*     C              VDC -RATED DC VOLTAGE, VOLTS                            000000
00101    22*     C              DI  -INVERTER CONTACT POTENTIAL, VOLTS                  000000
00101    23*     C              RI  -INVERTER RESISTANCE, OHMS                          000000
```

```
00101      24*      C                RAP -RATED OUTPUT POWER, KW                                    000000
00101      25*      C                EF1 -INPUT PRODUCT EFFICIENCY                                  000000
00101      26*      C                MP1 -MAXIMUM INPUT POWER, KW                                   000000
00101      27*      C                CC  -INVERTER COST/YEAR                                        000000
00101      28*      C                                                                               000000
00103      29*               COMMON /CIMPL/IMPL,ICNT/CTIME/TIME/CSIMUL/DUM(7),TMAX/COST/CCI        000000
00104      30*               REAL IDC,MP2,MP1,IAC                                                  000000
00105      31*               DATA PI/3.14159/                                                      000000
00105      32*      C                                                                               000000
00107      33*               IF(IMPL.GT.0) GO TO 100                                               000000
00111      34*               IF(RT.EQ..99999)RT=0.                                                 000002
00113      35*               IF(VDC.EQ..99999)VDC=100.                                             000006
00115      36*               IF(DI.EQ..99999)DI=0.                                                 000013
00117      37*               IF(RI.EQ..99999)RI=.005                                               000017
00121      38*               TMAX1=TMAX*.99999                                                     000024
00121      39*      C                                                                               000024
00121      40*      C                COMPUTE INPUT AND OUTPUT CURRENT                               000024
00121      41*      C                                                                               000024
00122      42*        100 IF(P1.GT.0.)GO TO 200                                                    000030
00124      43*             P2=0.                                                                   000032
00125      44*             IDC=0.                                                                  000033
00126      45*             PL=0.                                                                   000034
00127      46*             EF2=EF1                                                                 000035
00130      47*             MP2=AMIN1(MP1,RAP)                                                      000037
00131      48*             GO TO 400                                                               000045
00132      49*        200 IDC=P1*1000./VDC                                                         000047
00133      50*             IAC=SQRT(6.)*IDC/PI                                                     000052
00133      51*      C                                                                               000052
00133      52*      C                POWER LOSS AND OUTPUT POWER                                    000052
00133      53*      C                                                                               000052
00134      54*               PL=(IDC*(DI+RI*IDC)+SQRT(3.)*RT*IAC*IAC)/1000.                        000060
00135      55*               P2=P1-PL                                                              000075
00136      56*               EFF=P2/P1                                                             000077
00136      57*      C                                                                               000077
00136      58*      C                EFFICIENCY AND MAXIMUM POWER                                   000077
00136      59*      C                                                                               000077
00137      60*               EF2=EF1*EFF                                                           000101
00140      61*               MP2=AMIN1(MP1,RAP)                                                    000103
00141      62*               MP2=MP2*EFF                                                           000111
00142      63*               IF(P2.GT.0.)GO TO 400                                                 000114
00142      64*      C                                                                               000114
00144      65*               EF2=EF1                                                               000117
00145      66*               MP2=AMIN1(MP1,RAP)                                                    000121
00146      67*               IF(IMPL.EQ.2)WRITE(6,208)PL,P1                                        000123
00153      68*        208 FORMAT(1H0,14HIV POWER LOSS ,F12.3,21H EXCEEDS INPUT POWER ,F12.3,       000135
00153      69*           128H CHECK RATED DC VOLTAGE VDC  )                                        000135
00154      70*               IF(IMPL.EQ.2)ICNT=ICNT+1                                              000135
00156      71*               P2=0.                                                                 000143
00156      72*      C                                                                               000143
00157      73*        400 IF(IMPL.LE.1)RETURN                                                      000145
00161      74*               IF(TIME.LT.TMAX1)RETURN                                               000153
00163      75*               CCI=CCI+CC                                                            000162
00164      76*               RETURN                                                                000165
00165      77*               END                                                                   000260
```

7.20 FIRST ORDER LAG

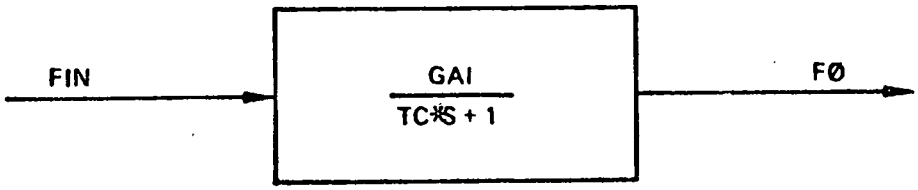

Inputs

Parameter/Port	Description
FIN	Input quantity
GAI	Gain
TC	Time constant[1] (hours)
FØ	Output variable (state)

Calculation Sequence

$$\dot{F\emptyset} = (GAI * FIN - F\emptyset)/TC$$

NOTE: d.c. gain = GAI; time constant = TC

infinite frequency gain = 0

pole location = $\frac{1}{TC}$ rad/sec.

---

1 If TC = 0, then FØ = FIN*GAI

```
SUBROUTINE LA        ENTRY POINT 000026

STORAGE USED  CODE(1) 000045; DATA(0) 000010; BLANK COMMON(2) 000000

 COMMON BLOCKS

 0003   CIO    000003

EXTERNAL REFERENCES (BLOCK, NAME)

 0004   NERR3$

STORAGE ASSIGNMENT  (BLOCK, TYPE, RELATIVE LOCATION, NAME)

 0001   000010 10L       0003   000002 IDIAG     0000   000000 INJPS     0003   000000 IREAD     0003   000001 IWRITE


00100      1*     CLA                                                                                    000000
00101      2*            SUBROUTINE LA(FO,FODOT,IFO,FIN,GAI,TC)                                          000000
00101      3*     C                                                                                      000000
00101      4*     C   PURPOSE - TO SIMULATE FIRST ORDER LAG      FO        GAI                           000000
00101      5*     C                                             ---- = -----------                       000000
00101      6*     C                                             FIN     (1.+TC*S)                        000000
00101      7*     C                                                                                      000000
00101      8*     C                                                                                      000000
00101      9*     C   METHOD  - SEE CODING                                                               000000
00101     10*     C                                                                                      000000
00101     11*     C                                                                                      000000
00101     12*     C   WRITTEN BY  -   ADAM LLOYD          LATEST REVISION     NOV 75                     000000
00101     13*     C                                                                                      000000
00101     14*     C                                                                                      000000
00101     15*     C   INPUT/OUTPUT LIST                                                                  000000
00101     16*     C                                                                                      000000
00101     17*     C   FO          TRANSFER FUNCTION OUTPUT            ANY       OUTPUT STATE             000000
00101     18*     C   FODOT       TRANSFER FUNCTION OUTPUT DERIV.     ANY       OUTPUT STATE             000000
00101     19*     C   IFO         INTEGERATOR CONTROL                 ---       PROGRAM VAR              000000
00101     20*     C   FIN         TRANSFER FUNCTION INPUT             ANY       INPUT  VAR               000000
00101     21*     C   GAI         TRANSFER FUNCTION GAIN              ---       INPUT  PARAM             000000
00101     22*     C   TC          TIME CONSTANT                       SECS      INPUT  PARAM             000000
00103     23*           COMMON/CIO/IREAD,IWRITE,IDIAG                                                    000000
00104     24*           IF(TC.NE.0.) GO TO 10                                                            000000
00106     25*           FO= GAI*FIN                                                                      000001
00107     26*           RETURN                                                                           000004
00110     27*        10 IF(IFO.NE.0) FODOT=(GAI*FIN-FO)/TC                                               000010
00112     28*           RETURN                                                                           000016
00113     29*           END                                                                              000044
```

7.21 LEAD LAG

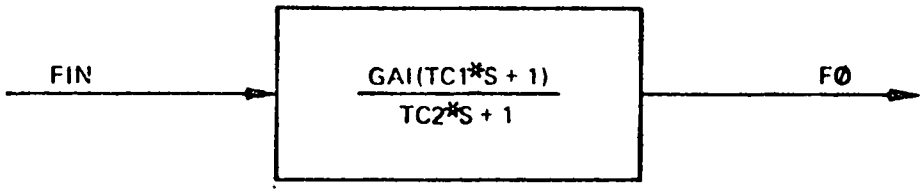

Inputs

Parameter/Port	Description
FIN	Input quantity
TC1	Numerator time constant (hours)
TC2	Denominator time constant (hours)
GAI	Gain

Outputs

Variable/Port	
X1	Intermediate quantity (state)
FØ	Output quantity (variable)

Calculation Sequence

$$FØ = (X1 + FIN*TC1*GAI)/TC2$$

$$\dot{X1} = GAI*FIN-FØ$$

NOTE: d.c. gain = GAI

$$\text{infinite gain} = \frac{GAI*TC1}{TC2}$$

$$\text{zero location} = -\frac{1}{TC1}\text{, rad/sec}$$

$$\text{pole location} = -\frac{1}{TC2}\text{, rad/sec}$$

```
SUBROUTINE LL        ENTRY POINT 000022

STORAGE USED  CODE(1) 000031; DATA(0) 000004; BLANK COMMON(2) 000000

 COMMON BLOCKS

 0003   CIO    000003

EXTERNAL REFERENCES (BLOCK, NAME)

 0004   NERR3$

STORAGE ASSIGNMENT  (BLOCK, TYPE, RELATIVE LOCATION, NAME)

 0003   000002 IDIAG     0000   000000 INJP$     0003   000000 IREAD     0003   000001 IWRITE
```

```
00100      1*      CLL                                                                    000000
00101      2*            SUBROUTINE LL(X1,X1DOT,IX1,FO,FIN,TC1,TC2,GAI)                   000000
00101      3*      C                                                                      000000
00101      4*      C   PURPOSE - TO SIMULATE LEAD LAG TRANSFER FUNCTION                   000000
00101      5*      C                                                                      000000
00101      6*      C                          FO     GAI*(1.+TC1*S)                      000000
00101      7*      C                         ----- = ---------------                      000000
00101      8*      C                          FIN      (1.+TC2*S)                         000000
00101      9*      C                                                                      000000
00101     10*      C                                                                      000000
00101     11*      C   METHOD  - SELF EXPLANATORY                                         000000
00101     12*      C                                                                      000000
00101     13*      C                                                                      000000
00101     14*      C   LIMITATIONS -   NONE                                               000000
00101     15*      C                                                                      000000
00101     16*      C                                                                      000000
00101     17*      C   WRITTEN BY  -   ADAM LLOYD          LATEST REVISION  NOV 75        000000
00101     18*      C                                                                      000000
00101     19*      C                                                                      000000
00101     20*      C   INPUT/OUTPUT LIST                                                  000000
00101     21*      C                                                                      000000
00101     22*      C   X1          STATE VARIABLE                    ANY       OUTPUT STATE  000000
00101     23*      C   X1DOT       STATE VARIABLE DERIVATIVE         ANY       OUTPUT STATE  000000
00101     24*      C   IX1         INTEGRATOR CONTROL                ---       PROGRAM VAR   000000
00101     25*      C   FO          TRANSFER FUNCTION OUTPUT          ANY       OUTPUT VAR    000000
00101     26*      C   FIN         TRANSFER FUNCTION INPUT           ANY       INPUT  VAR    000000
00101     27*      C   TC1         TIME CONSTANT (NUMERATOR)         SECS      INPUT  PARAM  000000
00101     28*      C   TC2         TIME CONSTANT (DENOMINATOR)       SECS      INPUT  PARAM  000000
00101     29*      C   GAI         TRANSFER FUNCTION GAIN            ---       INPUT  PARAM  000000
00010     30*            COMMON/CIO/IREAD,IWRITE,IDIAG                                    000000
00010     31*            FO=(X1+FIN*TC1*GAI)/TC2                                          000000
```

```
C0105     32*          IF(IX1.NE.0)X1DOT= GAI*FIN-FO                    000005
C0107     33*          RETURN                                           000013
C0110     34*          END                                              000030
```

7.22 ELECTRICAL LOAD

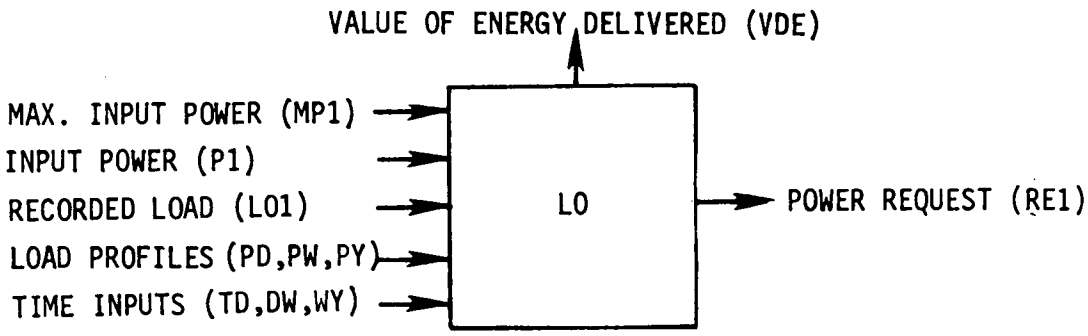

This component represents electrical load either by a user-specified data file time history or by a set of random numbers with user-specified daily, weekly, and yearly average profiles and user-specified random variation. It also computes the value of the power delivered to the load by the system. This value delivered is determined from a user-specified value per kwh. This value may be input in tabular form as a function of time of day, time of year, or any other system parameter.

If the user selects to have the electrical load represented by random numbers, then the load (LO2) is generated from the following equation:

<u>Basic Equation</u>

$$LØ2 = \left[PD(TD) + CN(t) \right] * PW(DW)*PY(WY)*NC$$

where

PD, PW, PY are the daily, weekly, and yearly profiles, respectively, and TD, DW, WY are the time of day, day of the week, and week of the year, respectively. NC is a normalizing constant.

CN is a colored noise term with user-specified correlation time, standard deviation and mean.

LO

Tables		Description	Units
PD		Daily profile (tabular with TD)	kw
PW		Weekly profile (tabular with DW)	arbitrary
PY		Yearly profile (tabular with WY)	arbitrary
Inputs			
Parameter/Port			
P	1	Power delivered	kw
MP	1	Maximum Input Power deliverable (D = $1X10^{10}$)	kw
NC		Normalizing constant	
VE		Value of Electrical Energy	$/kwh
LØ	1	Electrical load data file input	kw
TD		Time of day	-
DW		Day of week	-
WY		Week of year	-
CT		Correlation time of random noise	hr
MN,STD		Mean (D = 0) and std. deviation of random noise	kw
EF	1	Input Power Efficiency	-
Outputs			
Variable/Port			
RE	1	Power request	kw
VDE		Value of energy delivered (state)	$
LØ	2	Electrical load	kw
TIM		Last time a random sample was used	hr
CN		Colored noise sample	kw
Statistics			
SRE		Total energy requested	kwh
SDE		Total energy delivered	kwh
PC		Percentage of load met	-

D - Default values supplied

Calculation Sequence

1) Initialize CN(0) (first pass)

2) Check for data file input

If LØ1 = .99999 go to 3)

LØ2 = LØ1 and go to 5)

3) Generate colored noise CN

If TIM = TIME go to 5)

$$A = \begin{pmatrix} \exp(-\Delta/CT), & CT > 0, \ \Delta = \text{integration step size, hr} \\ 0. & CT = 0 \end{pmatrix}$$

CN = A*CN+W,

Where W is white noise generated by RN with

Mean = MN * (1-A) and standard deviation = STD * $\sqrt{1-A^2}$

4) Compute LØ2

LØ2 = (PD(TD) + CN) * PW(DW) * PY (WY) * NC

TIM = TIME

5) Power request and value delivered

RE = MIN(MP,LØ2)/EF1

6) Statistics

VDE = P1*VE

SRE = SRE + LØ2* Δ/2

SDE = SDE + P1* Δ/2

PC = 100.* SDE/SRE

```
SUBROUTINE LO        ENTRY POINT 000344

STORAGE USED  CODE(1) 000471; DATA(0) 000055; BLANK COMMON(2) 000000

 COMMON BLOCKS

 0003   CIMPL   000001
 0004   CSIMUL  000010
 0005   CTIME   000001
 0006   COST    000006

EXTERNAL REFERENCES (BLOCK, NAME)

 0007   RN
 0010   TBLU1
 0011   EXP
 0012   SQRT
 0013   NERR3$

STORAGE ASSIGNMENT  (BLOCK, TYPE, RELATIVE LOCATION, NAME)

 0001   000062 10L       0001   000070 100L      0001   000233 150L      0000 R 000005 A         0000 R 000000 AX
 0006   000000 CC        0006 R 000004 CDE       0006   000001 CM        0006   000002 CO        0006 R 000005 CRE
 0006 R 000003 CV        0000 R 000011 DLO       0004   000000 DUM       0003 I 000000 IMPL      0000   000022 INJPS
 0000 I 000001 ND        0000 I 000002 NW        0000 I 000003 NY        0010 R 000000 TBLU1     0005 R 000000 TIME
 0004 R 000006 TINC      0004 R 000007 TMAX      0000 R 000004 TMAX1     0000 R 000010 W         0000 R 000012 WLO
 0000 R 000006 WMN       0000 R 000007 WSD       0000 R 000013 YLO
```

```
00100      1*      CLO                                                                    000002
00101      2*            SUBROUTINE LO (PD,PW,PY,VDE,DVD,IVD,RE,LO2,SRE,SDE,PC,TIMO,XN,   000002
00101      3*           1 TD,DW,WY,XNC,CT,XMN,STD,VE,LO1,PMAX,PO,EF)                      000002
00101      4*      C                                                                      000002
00101      5*      C   PURPOSE     GENERATE ELECTRICAL LOAD FROM DAILY, WEEKLY, YEARLY AND 000002
00101      6*      C               RANDOM PROFILE DATA AND EVALUATE PERFORMANCE STATISTICS 000002
00101      7*      C                                                                      000002
00101      8*      C   METHOD      COLORED NOISE IS ADDED TO A MEAN DAILY PROFILE AND MULTIPLIED 000002
00101      9*      C               BY WEEKLY AND YEARLY WEIGHTING FCNS. POWER REQUESTED IS EITHER 000002
00101     10*      C               THE GENERATED LOAD OR THE MAX. POWER DELIVERABLE.      000002
00101     11*      C                                                                      000002
00101     12*      C   WRITTEN BY A.W.WARREN                          VERSION 1, MARCH 9 1977 000002
00101     13*      C                                                                      000002
00101     14*      C   CALL SEQUENCE                                                      000002
00101     15*      C         TABLES                                                       000002
00101     16*      C               PD  - MEAN DAILY PROFILE, KW                           000002
00101     17*      C               PW  - MEAN WEEKLY PROFILE, -                           000002
00101     18*      C               PY  - MEAN YEARLY PROFILE, -                           000002
00101     19*      C                                                                      000002
```

```
00101      20*      C          OUTPUTS                                                    000002
00101      21*      C               VDE - VALUE OF ENERGY DELIVERED (STATE), $            000002
00101      22*      C               DVD - DERIVATIVE OF VDE                               000002
00101      23*      C               IVD - INDICATOR FOR VDE                               000002
00101      24*      C               RE  - POWER REQUEST, KW                               000002
00101      25*      C               LO2 - ELECTRICAL LOAD DEMAND, KW                      000002
00101      26*      C               SRE - SUM OF ENERGY DESIRED, KWH                      000002
00101      27*      C               SDE - SUM OF ENERGY DELIVERED, KWH                    000002
00101      28*      C               PC  - CUMULATIVE PERCENT OF LOAD DELIVERED, -         000002
00101      29*      C               TIMO- LAST TIME A RANDOM SAMPLE WAS USED, HR          000002
00101      30*      C               XN  - COLORED NOISE SAMPLE, KW                        000002
00101      31*      C                                                                     000002
00101      32*      C          INPUTS                                                     000002
00101      33*      C               TD  - TIME OF DAY, HR                                 000002
00101      34*      C               DW  - DAY OF WEEK (1-7)                               000002
00101      35*      C               WY  - WEEK OF YEAR (1-52)                             000002
00101      36*      C               XNC - NORMALIZING CONSTANT, -                         000002
00101      37*      C               CT  - CORRELATION TIME OF RANDOM NOISE, HR            000002
00101      38*      C               XMN - MEAN OF RANDOM NOISE, KW                        000002
00101      39*      C               STD - STANDARD DEVIATION OF RANDOM NOISE, KW          000002
00101      40*      C               VE  - VALUE OF ELECTRICAL ENERGY, $/KWH               000002
00101      41*      C               LO1 - ELECTRICAL LOAD DATA FILE INPUT, KW             000002
00101      42*      C               PMAX- MAX. INPUT POWER DELIVERABLE, KW                000002
00101      43*      C               PO  - POWER DELIVERED TO LOAD, KW                     000002
00101      44*      C               EF  - INPUT POWER EFFICIENCY                          000002
00101      45*      C                                                                     000002
00103      46*           DIMENSION PD(1),PW(1),PY(1)                                      000002
00104      47*           REAL LO1,LO2                                                     000002
00105      48*           COMMON /CIMPL/ IMPL /CSIMUL/ DUM(6),TINC,TMAX/CTIME/TIME         000002
00106      49*           COMMON /COST/CC,CM,CO,CV,CDE,CRE                                 000002
00107      50*           DATA AX/.99999/                                                  000002
00107      51*      C                                                                     000002
00107      52*      C                         INITIALIZATION                              000002
00107      53*      C                                                                     000002
00111      54*           ND = PD(2)                                                       000002
00112      55*           NW = PW(2)                                                       000011
00113      56*           NY = PY(2)                                                       000020
00114      57*           IF(IMPL.GT.0) GO TO 10                                           000027
00116      58*           IF(XMN.EQ. .99999)XMN=0.                                         000032
00120      59*           TMAX1 = TMAX*.99999                                              000036
00121      60*           TIMO=-1.                                                         000041
00122      61*           SRE =0.0                                                         000043
00123      62*           SDE =0.0                                                         000044
00124      63*           PC  =0.0                                                         000045
00125      64*           CALL RN(XN,AX,STD,XMN)                                           000046
00126      65*           IF(PMAX.EQ. .99999) PMAX = 1.E10                                 000054
00126      66*      C                                                                     000054
00126      67*      C                         CHECK FOR DATA FILE INPUT                   000054
00126      68*      C                                                                     000054
00130      69*        10 IF(LO1.EQ. .99999) GO TO 100                                    000062
00132      70*           LO2 = LO1                                                        000064
00133      71*           GO TO 150                                                        000066
00133      72*      C                                                                     000066
00133      73*      C                         GENERATE COLORED NOISE SAMPLE XN            000066
0013       74*      C                                                                     000066
0013       75*       100 IF(  TIMO.EQ.TIME) GO TO 150                                    000070
0013       76*           A=0.                                                             000072
```

```
00137     77*          IF(CT.GT.0.) A = EXP(-TINC/CT)                                  000073
00141     78*          WMN = XMN*(1.-A)                                                000116
00142     79*          WSD = STD*SQRT(1.-A*A)                                          000122
00143     80*          CALL RN(W,AX,WSD,WMN)                                           000133
00144     81*          XN = XN*A + W                                                   000141
00144     82*     C                        COMPUTE ELECTRICAL LOAD DEMAND              000141
00144     83*     C                                                                    000141
00145     84*          DLO = TBLU1(TD,PD(4),PD(ND+4),1,-ND)                            000145
00146     85*          WLO = TBLU1(DW,PW(4),PW(NW+4),1,-NW)                            000164
00147     86*          YLO = TBLU1(WY,PY(4),PY(NY+4),1,-NY)                            000203
00150     87*          LO2 = (DLO+XN)*WLO + YLO*XNC                                    000222
00151     88*          TIMO = TIME                                                     000230
00152     89*      150 RE = AMIN1(PMAX,LO2)/EF                                         000233
00152     90*     C                        PERFORMANCE STATISTICS                      000233
00152     91*     C                                                                    000233
00153     92*          IF(IMPL.LE.1) RETURN                                            000241
00155     93*          IF(IVD.NE. 0) DVD = PO*VE                                       000250
00157     94*          SRE = SRE + LO2*0.5*TINC                                        000261
00160     95*          SDE = SDE + PO*0.5*TINC                                         000266
00161     96*          IF(SRE.GT.0.) PC = 100.*SDE/SRE                                 000271
00161     97*     C                                                                    000271
00163     98*          IF(TIME.LT.TMAX1) RETURN                                        000300
00165     99*          CV = CV + VDE                                                   000307
00166    100*          CDE= CDE + SDE- PO*0.5*TINC                                     000312
00167    101*          CRE= CRE + SRE- LO2*0.5*TINC                                    000316
00170    102*          RETURN                                                          000325
00171    103*          END                                                             000470
```

7.23 MULTIPLY AND ADD

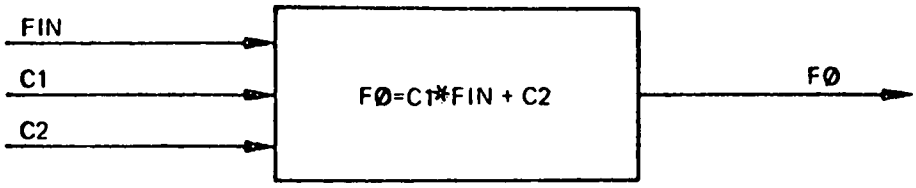

Inputs

Parameter/Port	Description
FIN	Input quantity
C1	Input quantity
C2	Input quantity

Outputs

Variable/Port	
FØ	Output quantity

Calculation Sequence

FØ = C1*FIN + C2

```
SUBROUTINE MA        ENTRY POINT 000012

STORAGE USED  CODE(1) 000016; DATA(0) 000004; BLANK COMMON(2) 000000

EXTERNAL REFERENCES (BLOCK, NAME)

 0003   NERR3$

STORAGE ASSIGNMENT  (BLOCK, TYPE, RELATIVE LOCATION, NAME)

 0000   000000 INJPS
```

```
00100      1*      CMA                                                                    000000
00101      2*            SUBROUTINE MA(FO,FIN,C1,C2)                                      000000
00101      3*      C                                                                      000000
00101      4*      C   PURPOSE - TO SIMULATE THE EQUATION   OUTPUT=C1*INPUT + C2          000000
00101      5*      C                                                                      000000
00101      6*      C                                                                      000000
00101      7*      C   METHOD  - SEE CODING                                               000000
00101      8*      C                                                                      000000
00101      9*      C                                                                      000000
00101     10*      C   WRITTEN BY  -  ADAM LLOYD          LATEST REVISION     NOV 75      000000
00101     11*      C                                                                      000000
00101     12*      C                                                                      000000
00101     13*      C   LIMITATIONS - NONE                                                 000000
00101     14*      C                                                                      000000
00101     15*      C                                                                      000000
00101     16*      C   INPUT/OUTPUT LIST                                                  000000
00101     17*      C                                                                      000000
00101     18*      C   FO          OUTPUT VARIABLE              ANY          OUTPUT VAR    000000
00101     19*      C   FIN         INPUT  VARIABLE              ANY          INPUT  VAR    000000
00101     20*      C   C1          CONSTANT MULTIPLIER          ---          INPUT  PARAM  000000
00101     21*      C   C2          CONSTANT ADDITION            ---          INPUT  PARAM  000000
00103     22*            FO=C1*FIN + C2                                                   000000
00104     23*            RETURN                                                           000003
00105     24*            END                                                              000015
```

MA

7.24 MULTIPLY, DIVIDE, AND ADD

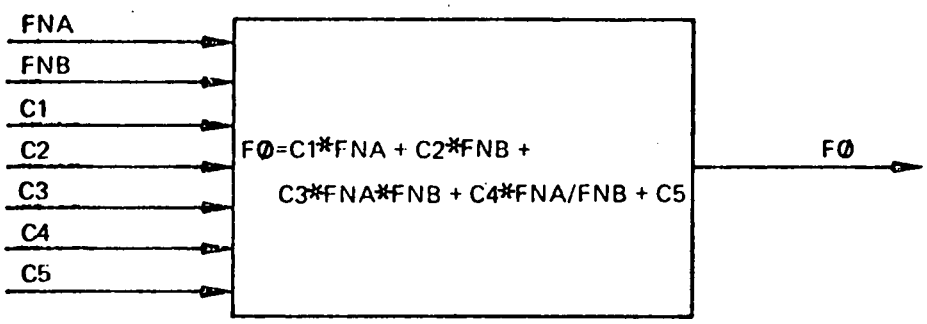

Inputs

Parameter/Port	Description
FNA	Input quantity
FNB	Input quantity
C1	Input quantity
C2	Input quantity
C3	Input quantity
C4	Input quantity
C5	Input quantity.

Outputs

Variable/Port	
FØ	Output quantity

Calculation Sequence

FØ = C1*FNA+C2*FNB+C3*FNA*FNB+C4*FNA/FNB+C5

```
SUBROUTINE MB          ENTRY POINT 000051

STORAGE USED  CODE(1) 000064; DATA(0) 000023; BLANK COMMON(2) 000000

 COMMON BLOCKS

 0003   ERMESS 000002
 0004   CIO    000003

EXTERNAL REFERENCES (BLOCK, NAME)

 0005   NWDUS
 0006   N102$
 0007   NERR3$

STORAGE ASSIGNMENT  (BLOCK, TYPE, RELATIVE LOCATION, NAME)

 0001   000030 10L       0000   000000 20F       0001   000042 30L       0004   000002 IDIAG     0003   000001 IERR
 0003   000000 IFATAL    0000   000015 INJP$     0004   000000 IREAD     0004 I 000001 IWRITE
```

```
00100      1*      CMB                                                                                  000000
00101      2*              SUBROUTINE MB(FO,FNA,FNB,C1,C2,C3,C4,C5)                                     000000
00101      3*      C                                                                                    000000
00101      4*      C   PURPOSE - TO SIMULATE THE EQUATION   Y=C1*XA+C2*XB+C3*XA*XB+C4*XA/XB+C5          000000
00101      5*      C                                                                                    000000
00101      6*      C                                                                                    000000
00101      7*      C   WRITTEN BY - GEORGE DULEBA                    LATEST REVISION   MAY 76           000000
00101      8*      C                                                                                    000000
00101      9*      C                                                                                    000000
00101     10*      C   LIMITATIONS - IF FNB=0 DURING DIVISION, FNB IS SET TO E-20.                      000000
00101     11*      C                 DIAGNOSTIC MESSAGE IS GIVEN.                                       000000
00101     12*      C                                                                                    000000
00101     13*      C                                                                                    000000
00101     14*      C   INPUT/OUTPUT LIST                                                                000000
00101     15*      C                                                                                    000000
00101     16*      C   FO          OUTPUT VARIABLE                        ANY          OUTPUT  VAR       000000
00101     17*      C   FNA         INPUT VARIABLE A                       ANY          INPUT   VAR       000000
00101     18*      C   FNB         INPUT VARIABLE B                       ANY          INPUT   VA        000000
00101     19*      C   C1          MULTIPLIER 1                           ANY          INPUT   VAR       000000
00101     20*      C   C2          MULTIPLIER 2                           ANY          INPUT   VAR       000000
00101     21*      C   C3          MULTIPLIER 3                           ANY          INPUT   VAR       000000
00101     22*      C   C4          MULTIPLIER 4                           ANY          INPUT   VAR       000000
00101     23*      C   C5          ADDITIVE VARIABLE                      ANY          INPUT   VAR       000000
00101     24*      C                                                                                    000000
00101     25*      C                                                                                    000000
00103     26*              COMMON/ERMESS/IFATAL,IERR                                                    000000
00104     27*              COMMON/CIO/IREAD,IWRITE,IDIAG                                                000000
```

MB

```
00105     28*          FO= C1*FNA + C2*FNB + C3*FNA*FNB + C5                    000000
00106     29*          IF(C4.EQ.0.99999) GO TO 30                               000012
00110     30*          IF(FNB.EQ.0.) GO TO 10                                   000015
00112     31*          FO= FO + C4*FNA/FNB                                      000017
00113     32*          RETURN                                                   000024
00114     33*     10   WRITE(IWRITE,20)                                         000030
00116     34*     20   FORMAT(/,30X, 53HWARNING- DIVISOR IN MB EQUALS 0., HAS BEEN SET=1.  000034
00116     35*         2E-20)                                                    000034
00117     36*          FO= FO + C4*FNA*1.E+20                                   000034
00120     37*     30   RETURN                                                   000042
00121     38*          END                                                      000063
```

7.25 MULTIPLY AND ADD

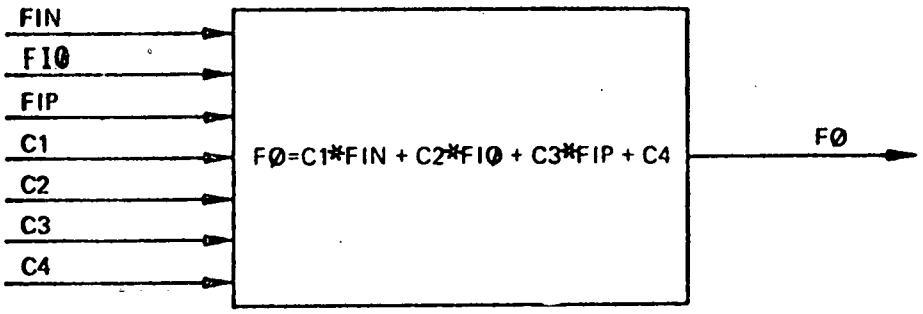

Inputs

Parameter/Port	Description
FIN	Input quantity
FIØ	Input quantity
FIP	Input quantity
C1	Input quantity
C2	Input quantity
C3	Input quantity
C4	Input quantity

Outputs

Variable/Port	
FØ	Output quantity

Calculation Sequence

FØ = C1*FIN + C2*FIØ + C3*FIP + C4

```
SUBROUTINE MC        ENTRY POINT 000020

STORAGE USED  CODE(1) 000024; DATA(0) 000004; BLANK COMMON(2) 000000

EXTERNAL REFERENCES (BLOCK, NAME)
 0003   NERR3$

STORAGE ASSIGNMENT  (BLOCK, TYPE, RELATIVE LOCATION, NAME)
 0000   000000 INJP$
```

```
00100      1*     CMC                                                                    000000
00101      2*            SUBROUTINE MC(FO,FIN,FIO,FIP,C1,C2,C3,C4)                       000000
00101      3*     C                                                                      000000
00101      4*     C   PURPOSE - TO SIMULATE THE EQUATION  FO=C1*FIN+C2*FIO+C3*FIP+C4     000000
00101      5*     C                                                                      000000
00101      6*     C                                                                      000000
00101      7*     C   METHOD  - SEE CODING                                               000000
00101      8*     C                                                                      000000
00101      9*     C                                                                      000000
00101     10*     C   WRITTEN BY  -  ADAM LLOYD           LATEST REVISION   NOV 75       000000
00101     11*     C                                                                      000000
00101     12*     C                                                                      000000
00101     13*     C   LIMITATIONS - NONE                                                 000000
00101     14*     C                                                                      000000
00101     15*     C                                                                      000000
00101     16*     C   INPUT/OUTPUT LIST                                                  000000
00101     17*     C                                                                      000000
00101     18*     C   FO          OUTPUT VARIABLE              ANY          OUTPUT VAR    000000
00101     19*     C   FIN         INPUT  VARIABLE              ANY          INPUT  VAR    000000
00101     20*     C   FIO         INPUT  VARIABLE              ANY          INPUT  VAR    000000
00101     21*     C   FIP         INPUT  VARIABLE              ANY          INPUT  VAR    000000
00101     22*     C   C1          CONSTANT MULTIPLIER          ---          INPUT  PARAM  000000
00101     23*     C   C2          CONSTANT MULTIPLIER          ---          INPUT  PARAM  000000
00101     24*     C   C3          CONSTANT MULTIPLIER          ---          INPUT  PARAM  000000
00101     25*     C   C4          CONSTANT ADDITION            ---          INPUT  PARAM  000000
00103     26*           FO=C1*FIN+C2*FIO+C3*FIP+C4                                       000000
00104     27*           RETURN                                                           000011
00105     28*           END                                                              000023
```


MC

7.26 AC INDUCTION MOTOR

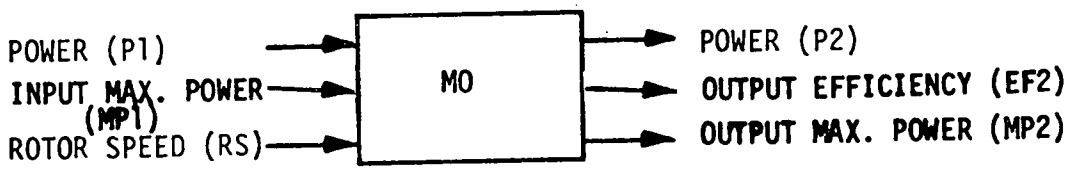

The induction motor produces mechanical power and torque proportional to slip speed, i.e. power and torque approach zero as the rotor approaches synchronous speed. Two power losses are modeled: a constant multiplicative term due to resistive heating and an additive term due to mechanical friction. Default parameters are based on a conventional squirrel-cage induction motor/generator machine.

Basic Equations

$$P2 = EE*P1 + DA*RS^2*C$$

where

P1,P2 = input and output power

EE = electrical efficiency

DA = mechanical damping

C = conversion constant

Inputs

Parameter/Port		Description	Units
P	1	Input power	kw
DA		Mechanical damping (D = 0)	joule-sec
RS		Rotor speed	rpm
RSY		Synchronous rotor speed (D = 1800)	rpm
SR		Stator resistance (D = 8/RAP)	ohms
VØ		Rated input voltage (D = 400)	volts
RAP		Rated input power	kw
RAS		Rated power slip (D = 0.05)	-
EF	1	Input product efficiency	-
MP	1	Maximum input power (D = 1×10^8)	kw
CC		Capital cost/year	$
CM		Maintenance cost/year	$

Outputs

Variable/Port			
P	2	Output mechanical power	kw
EE		Electrical efficiency	-
TØ		Mechanical torque	ft-lb
PL		Power loss	kw
EF	2	Output product efficiency	-
MP	2	Output maximum power	kw

Statistics

MT	Maximum torque	ft-lb
MPN	Maximum output power/rated power	-
SP	Output energy sum	kwh

D - Default values supplied.

Calculation Sequence

1) Compute electrical efficiency (first pass only)

I_{RAT} = RAP*1000/VO

EE = 1 - SR*I^2_{RAT}/RAP*1000

2) Diagnostics

P1 > RAP ⇨ DIAGNOSTIC

SLIP = 1 - RS/RSY > RAS ⇨ DIAGNOSTIC

3) Output power and power loss

ω = RS*(2π/60)

P2 = EE*P1 - DA* ω^2/1000

PL = P1 - P2

4) If P2 > 0 go to 5)

P1 > 0 ⇨ DIAGNOSTIC

EF2 = EF1, MP2 = MIN(MP1,RAP)

Go to 7)

5) Compute torque

TØ = P2*1000/ω*k

k = 1.3558 joules/ft-lb

Calculation Sequence Cont.

6) Efficiency and maximum output power

EF2 = EF1*(P2/P1)

MP2 = MIN(MP1,RAP)*(P2/P1)

7) Compute Statistics and Costs

```
SUBROUTINE MO          ENTRY POINT 000312

STORAGE USED  CODE(1) 000434; DATA(0) 000102; BLANK COMMON(2) 000000

 COMMON BLOCKS

 0003   CIMPL   000002
 0004   CTIME   000001
 0005   CSIMUL  000010
 0006   COST    000010

EXTERNAL REFERENCES (BLOCK, NAME)

 0007   NWDUS
 0010   N102S
 0011   NERR3S

STORAGE ASSIGNMENT  (BLOCK, TYPE, RELATIVE LOCATION, NAME)

 0001   000062 100L      0001   000106 200L      0000   000004 208F      0001   000135 300L      0000   000017 308F
 0001   000213 400L      0000   000032 408F      0001   000201 409L      0001   000235 500L      0006 R 000000 CCI
 0006 R 000001 CMI       0006   000002 COP       0005 R 000000 DUM       0003 I 000001 ICNT      0003 I 000000 IMPL
 0000   000066 INJPS     0000 R 000003 OMEGA     0000 R 000002 SLIP      0006   000004 TDE       0004 R 000000 TIME
 0000 R 000001 TINC      0006   000005 TLD       0005 R 000007 TMAX      0000 R 000000 TMAX1     0006   000007 UTD
 0006   000006 UTV       0006   000003 VDE

00100      1*     CMO                                                                                    000000
00101      2*            SUBROUTINE MO(P2,EE,TO,PL,EF2,MP2,MT,MPN,SP,                                    000000
00101      3*          1                P1,DA,RS,RSY,SR,VO,RAP,RAS,EF1,MP1,CC,CM)                         000000
00101      4*     C                                                                                      000000
00101      5*     C              PURPOSE    AC INDUCTION MOTOR MODEL                                     000000
00101      6*     C                                                                                      000000
00101      7*     C              METHOD     MECHANICAL POWER AND TORQUE CALCULATED                       000000
00101      8*     C                         FROM INPUT AC POWER AND ROTOR SPEED                          000000
00101      9*     C                                                                                      000000
00101     10*     C              WRITTEN BY Y.K.CHAN          VERSION 1, JUNE 13, 1977                    000000
00101     11*     C                                                                                      000000
00101     12*     C   CALL SEQUENCE                                                                      000000
00101     13*     C          OUTPUTS                                                                     000000
00101     14*     C              P2   -OUTPUT MECHANICAL POWER,KW                                        000000
00101     15*     C              EE   -ELECTRICAL EFFICIENCY                                             000000
00101     16*     C              TO   -MECHANICAL TORQUE,FT-LB                                           000000
00101     17*     C              PL   -POWER LOSS,KW                                                     000000
00101     18*     C              EF2  -OUTPUT POWER EFFICIENCY                                           000000
00101     19*     C              MP2  -OUTPUT MAXIMUM POWER,KW                                           000000
00101     20*     C          STATISTICS                                                                  000000
00101     21*     C              MT   -MAXIMUM TORQUE,FT-LB                                              000000
```

MO

```
00101      22*      C              MPN -MAXIMUM OUTPUT POWER/RATED POWER                                  000000
00101      23*      C              SP-OUTPUT POWER SUM                                                    000000
00101      24*      C          INPUTS                                                                     000000
00101      25*      C              P1  -INPUT POWER,KW                                                    000000
00101      26*      C              DA  -MECHANICAL DAMPING,JOULE-SEC                                      000000
00101      27*      C              RS  -ROTOR SPEED,RPM                                                   000000
00101      28*      C              RSY -SYNCHRONOUS ROTOR SPEED,RPM                                       000000
00101      29*      C              SR  -STATOR RESISTANCE,OHMS                                            000000
00101      30*      C              VO  -RATED INPUT VOLTAGE,VOLTS                                         000000
00101      31*      C              RAP -RATED INPUT POWER,KW                                              000000
00101      32*      C              RAS -RATED PWER SLIP                                                   000000
00101      33*      C              EF1 -INPUT PRODUCT EFFICIENCY                                          000000
00101      34*      C              MP1 -MAXIMUM INPUT POWE,KW                                             000000
00101      35*      C              CC  -CAPITAL COST/YEAR,$                                               000000
00101      36*      C              CM  -MAINTENANCE COST/YEAR,$                                           000000
00101      37*      C                                                                                     000000
00103      38*           COMMON /CIMPL/IMPL,ICNT/CTIME/TIME/CSIMUL/DUM(7),TMAX                            000000
00103      39*          X        /COST/CCI,CMI,COP,VDE,TDE,TLO,UTV,UTD                                    000000
00104      40*           REAL MP2,MT,MPN,MP1                                                              000000
00104      41*      C                                                                                     000000
00105      42*           IF(IMPL.GT.0)GO TO 100                                                           000000
00107      43*           IF(DA.EQ..99999)DA=0.                                                            000002
00111      44*           IF(RSY.EQ..99999)RSY=1800.                                                       000006
00113      45*           IF(SR.EQ..99999)SR=8./RAP                                                        000013
00115      46*           IF(VO.EQ..99999)VO=400.                                                          000021
00117      47*           IF(MP1.EQ..99999)MP1=1.E8                                                        000026
00121      48*           IF(RAS.EQ..99999)RAS=.05                                                         000033
00123      49*           TMAX1=TMAX*.99999                                                                000040
00124      50*           MT=0.                                                                            000043
00125      51*           MPN=0.                                                                           000044
00126      52*           SP=0.                                                                            000045
00127      53*           TINC=DUM(7)*.5                                                                   000046
00127      54*      C                                                                                     000046
00127      55*      C              COMPUTE ELECTRICAL EFFICIENCY                                          000046
00127      56*      C                                                                                     000046
00130      57*           EE=1.-SR*RAP*1000./(VO*VO)                                                       000051
00131      58*       100 IF(P1.LE.RAP)GO TO 200                                                           000062
00133      59*           IF(IMPL.EQ.2)WRITE(6,208)P1,RAP                                                  000065
00140      60*       208 FORMAT(1H0,18H MOTOR INPUT POWER,F12.3,23H .GT.RATED INPUT POWER ,               000077
00140      61*          1  F12.3)                                                                         000077
00141      62*           IF(IMPL.EQ.2)ICNT=ICNT+1                                                         000077
00143      63*       200 SLIP=1.-(RS/RSY)                                                                 000106
00144      64*           IF(SLIP.LE.PAS)GO TO 300                                                         000111
00146      65*           IF(IMPL.EQ.2)WRITE(6,308)SLIP,RAS                                                000114
00153      66*       308 FORMAT(1H0,11H MOTOR SLIP,F12.3,25H EXCEEDS RATED POWER SLIP,                    000126
00153      67*          1  F12.3)                                                                         000126
00154      68*           IF(IMPL.EQ.2)ICNT=ICNT+1                                                         000126
00154      69*      C                                                                                     000126
00154      70*      C              COMPUTE POWER AND POWER LOSS                                           000126
00154      71*      C                                                                                     000126
00156      72*       300 OMEGA=RS*3.14159/30.                                                             000135
00157      73*           P2=EE*P1-DA*OMEGA*OMEGA/1000.                                                    000140
00160      74*           PL=P1-P2                                                                         000147
00161      75*           TO=0.                                                                            000151
00162      76*           IF(P2.GT.0.)GO TO 400                                                            000152
00164      77*           IF(P1.LE.0.)GO TO 409                                                            000155
00166      78*           IF(IMPL.EQ.2)WRITE(6,408)SR,DA                                                   000160
```

```
00173      79*        408 FORMAT(1H0,19H STATOR RESISTANCE  ,F12.3,12H OR DAMPING ,      000172
00173      80*           XF12.3,20H TOO HIGH FOR MOTOR  )                                000172
00174      81*            IF(IMPL.EQ.2)ICNT=ICNT+1                                       000172
00174      82*      C                                                                    000172
00174      83*      C              EFFICIENCY AND MAXIMUM OUTPUT POWER                   000172
00174      84*      C                                                                    000172
00176      85*        409 CONTINUE                                                       000201
00177      86*            P2=0.                                                          000201
00200      87*            EF2=EF1                                                        000201
00201      88*            MP2=AMIN1(MP1,RAP)                                             000203
00202      89*            GO TO 500                                                      000211
00203      90*        400 EF2=EF1*P2/P1                                                  000213
00204      91*            MP2=AMIN1(MP1,RAP)*P2/P1                                       000216
00205      92*            IF(RS.NE.0.)TO=P2*737.6/OMEGA                                  000226
00205      93*      C                                                                    000226
00207      94*        500 IF(IMPL.LE.1)RETURN                                            000235
00207      95*      C                                                                    000235
00207      96*      C              STATISTICS                                            000235
00207      97*      C                                                                    000235
00211      98*            MT=AMAX1(TO,MT)                                                000243
00212      99*            MPN=AMAX1(P2/RAP,MPN)                                          000251
00213     100*            SP=SP+P2*TINC                                                  000260
00213     101*      C                                                                    000260
00214     102*            IF(TIME.LT.TMAX1)RETURN                                        000264
00216     103*            CCI=CCI+CC                                                     000273
00217     104*            CMI=CMI+CM                                                     000276
00217     105*      C                                                                    000276
00220     106*            RETURN                                                         000301
00221     107*            END                                                            000433
```

PA

7.27 POWER ACCUMULATOR

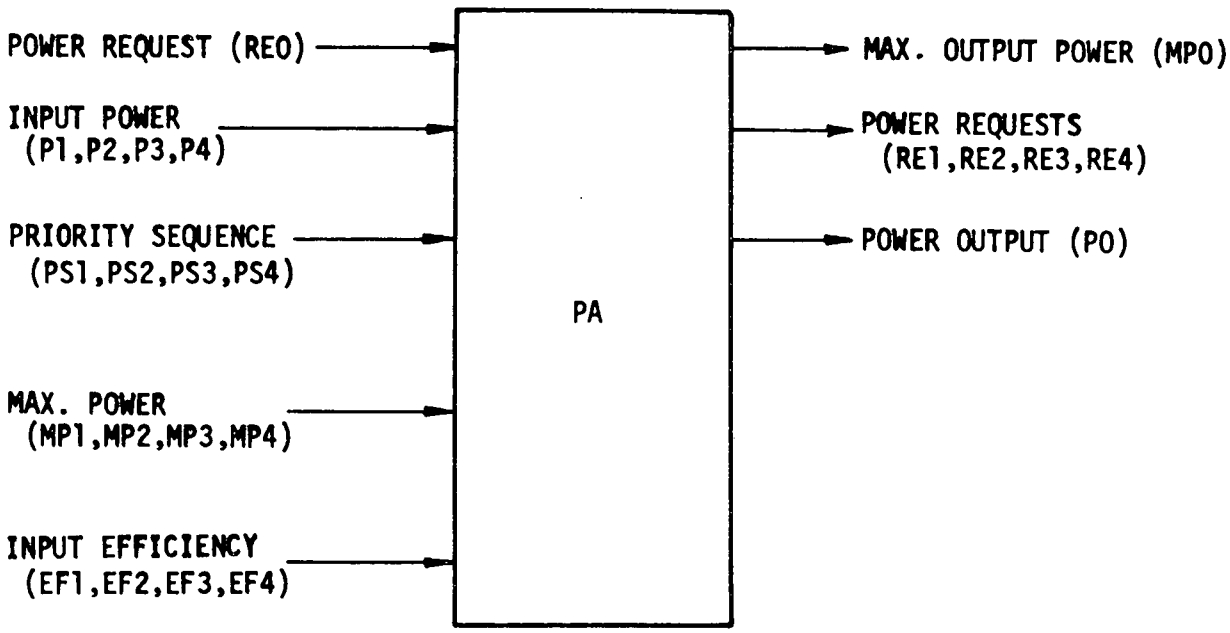

This component sums power from four input ports and allocates power requests to each port's source of power generation. If an input power request (load) exceeds the maximum power that can be delivered by the port of highest priority, then the remaining load is allocated according to weight within priority, and then allocated to the next priority ports. (See 1.2.3 for further discussion.)

PA

Inputs[1]

Parameter/Port		Description	Units
RE	0	Load request	kw
EF	1,2,3,4	Input efficiency from port i	-
P	1,2,3,4	Input power from port I (default = 0.)	kw
PS	1,2,3,4	Priority sequence (default=1,2,3,4)	-
F	1,2,3,4	Allocation weight (for equal priorities)	-
MP	1,2,3,4	Maximum power (default = 1×10^8)	kw

Outputs

Variable/Port			
MP	0	Maximum deliverable power ($\Sigma MP(i)$)	kw
RE	1,2,3,4	Power request for port i	kw
P	0	Power output	kw
SP		Supplemental power request to meet load (Power deficit) = $RE_0 - \Sigma MP_i$	kw

Statistics

SRE		Sum of energy requested	kwh
PC	1,2,3,4	Percent of cumulative load request delivered by port i	%

[1] No capital costs assigned since this is an allocation component, not a physical device.

CALCULATION LOGIC

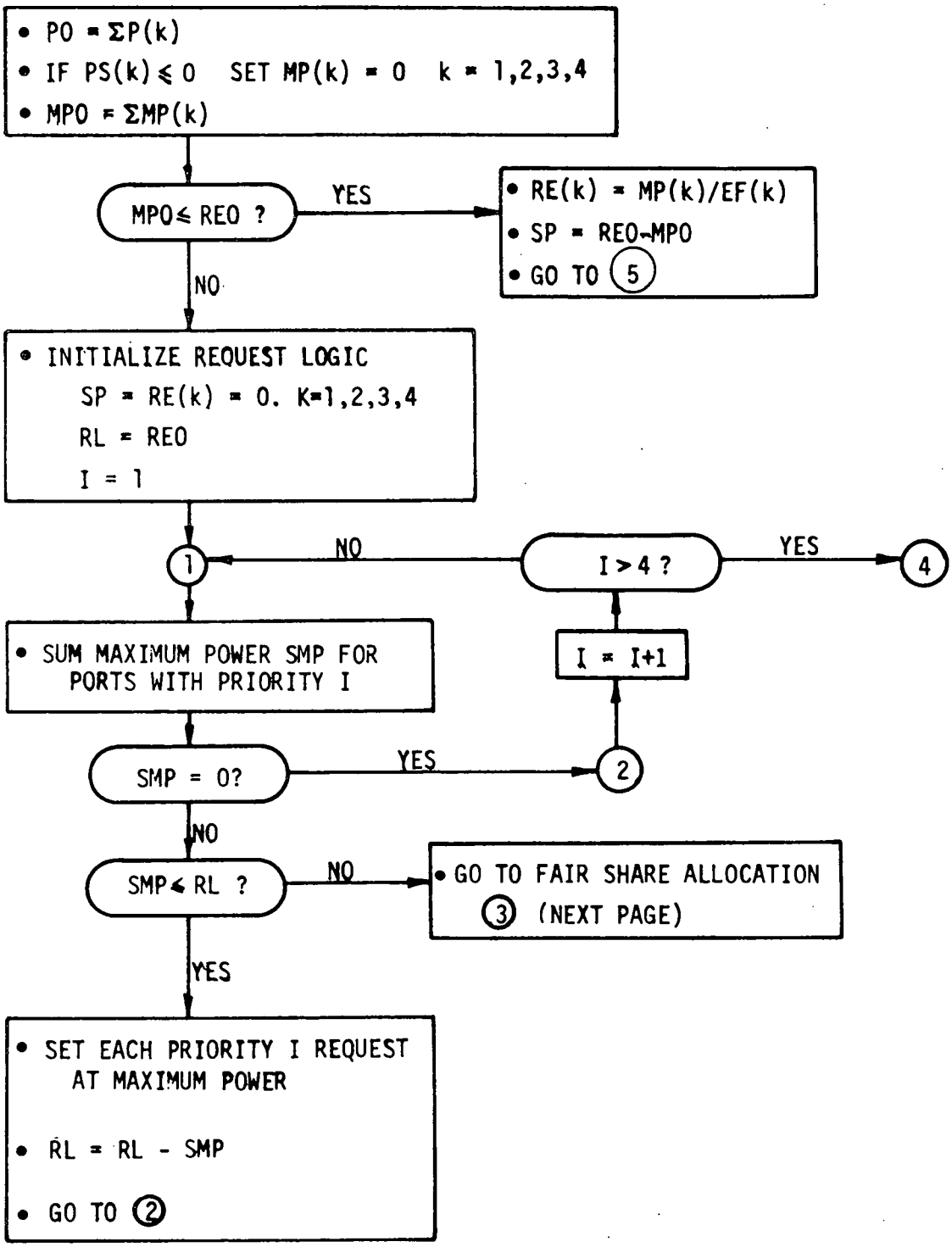

PA FAIR SHARE ALLOCATION

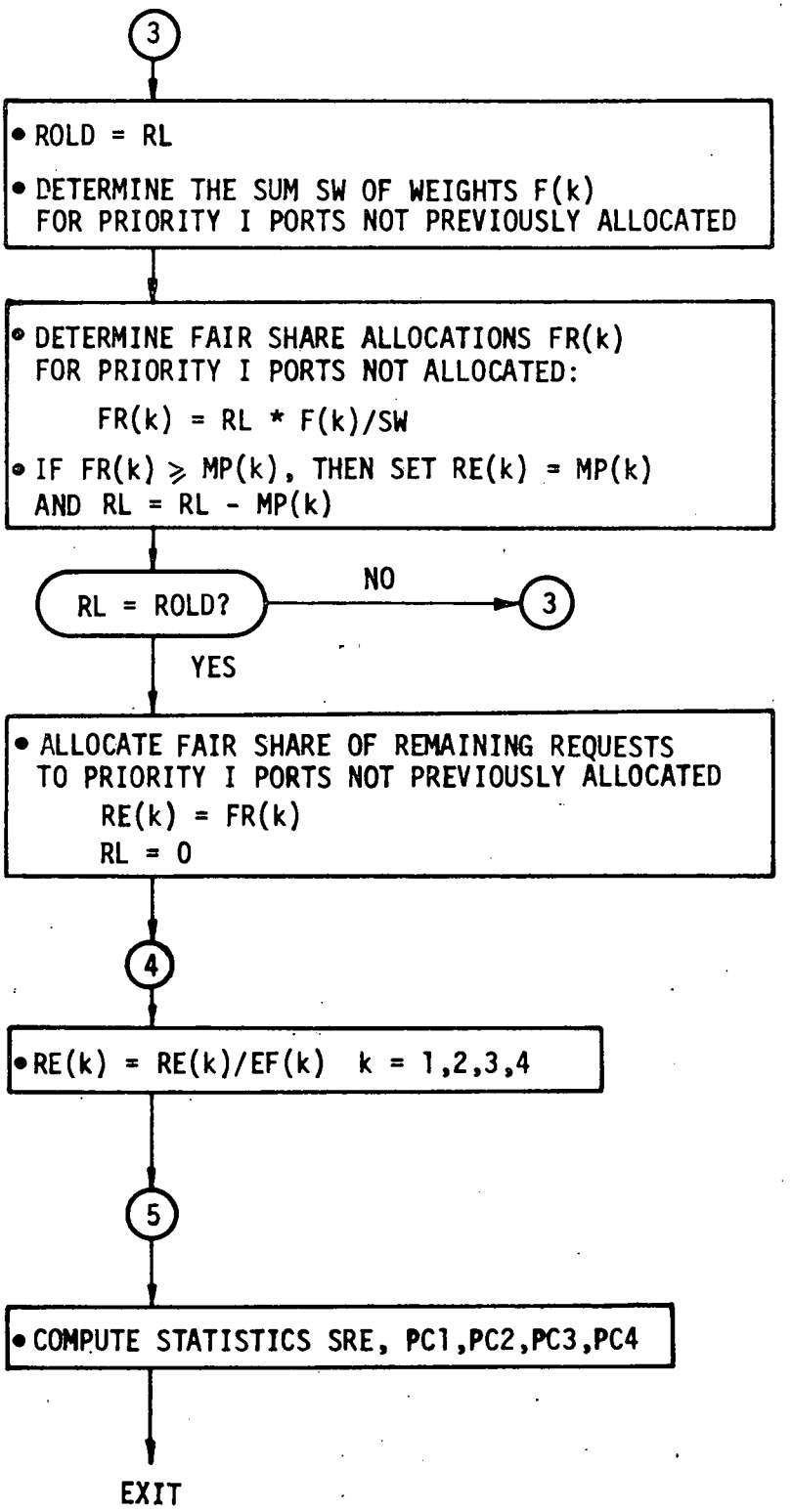

```
SUBROUTINE PA        ENTRY POINT 000520

STORAGE USED  CODE(1) 000752; DATA(0) 000110; BLANK COMMON(2) 000000

 COMMON BLOCKS

 0003   CIMPL  000001
 0004   CSIMUL 000010

EXTERNAL REFERENCES (BLOCK, NAME)

 0005   NERR3$

STORAGE ASSIGNMENT  (BLOCK, TYPE, RELATIVE LOCATION, NAME)

 0001   000376 1000L     0001   000401 2000L     0001   000235 2346      0001   000244 2416      0001   000264 2546
 0001   000306 2736      0001   000325 3056      0001   000363 3256      0001   000104 40L       0001   000301 400L
 0001   000417 500L      0001   000301 600L      0001   000316 700L      0001   000161 80L       0001   000353 800L
 0001   000372 900L      0004   000000 DUM       0000 R 000030 FR        0000 R 000042 FRU       0000 I 000037 I
 0003 I 000000 IMPL      0000   000055 INJP$     0000 I 000041 K         0000 R 000034 LL        0000 R 000035 LOLD
 0000 R 000014 MP        0000 R 000004 PR        0000 R 000000 R         0000 R 000024 SMP       0000 R 000044 SRI
 0000 R 000043 SRO       0000 R 000020 SW        0004 R 000006 TINC      0000 R 000036 TINC1     0004   000007 TMAX
 0000 R 000010 W         0000 R 000040 XI
```

```
00100      1*      CPA                                                                    000000
00101      2*              SUBROUTINE PA(MPO,                                             000000
00101      3*          1       R1, R2, R3, R4,                                            000000
00101      4*          2       PO,SP,                                                     000000
00101      5*          3       SR,PC1,PC2,PC3,PC4,                                        000000
00101      6*          4       RO,                                                        000000
00101      7*          4       EF1, EF2, EF3, EF4,                                        000000
00101      8*          5       P1, P2, P3, P4,                                            000000
00101      9*          6       PR1, PR2, PR3, PR4,                                        000000
00101     10*          7       W1, W2, W3, W4,                                            000000
00101     11*          8       MP1, MP2, MP3, MP4)                                        000000
00101     12*      C                                                                      000000
00101     13*      C     PURPOSE.   MODEL POWER ACCUMULATOR                               000000
00101     14*      C                                                                      000000
00101     15*      C     METHOD.  PRIMARY REQUEST ALLOCATION RESULTING FROM PRIORITY      000000
00101     16*      C     ASSIGNMENTS.  SECONDARY REQUEST ALLOCATION RESULTING             000000
00101     17*      C     FROM WEIGHT ASSIGNMENTS.                                         000000
00101     18*      C     THAT IS, REQUESTS ARE ALLOCATED ACCORDING TO                     000000
00101     19*      C       *  PORT PRIORITY (HIGHEST PRIORITY = 1)                        000000
00101     20*      C       *  PORT WEIGHTS (IN CASE OF EQUAL PRIORTIES.  )                000000
00101     21*      C                                                                      000000
00101     22*      C     FORMAL ARGUMENT DEFINITION.                                      000000
00101     23*      C     R1,...., R4      POWER REQUESTS IN KW      (OUTPUTS)             000000
```

PA

```
00101   24*   C     MPO              TOTAL MAXIMUM POWER       (OUTPUT)                    000000
00101   25*   C     SP               SURPLUS REQUEST           (OUTPUT)                    000000
00101   26*   C     PO               TOTAL LOAD IN KW          (OUTPUT)                    000000
00101   27*   C     SR               SUM OF ENERGY REQUESTED, KWH (OUTPUT)                 000000
00101   28*   C     PC1,...,PC4      PERCENT OF CUM LOAD DELIVERED (OUTPUT)                000000
00101   29*   C     RO               TOTAL POWER REQUESTED,KW (INPUT)                      000000
00101   30*   C     P1,..., P4       INPUT POWER IN KW         (INPUTS)                    000000
00101   31*   C     PR1,..., PR4     PORT PRIORITIES           (INPUTS)                    000000
00101   32*   C     W1,..., W4       PORT WEIGHTS              (INPUTS)                    000000
00101   33*   C     MP1, ..., MP4      MAXIMUM POWERS          (INPUTS)                    000000
00101   34*   C     EF1, ..., EF4      EFFICIENCIES            (INPUTS)                    000000
00101   35*   C      COMMON STORAGE                                                        000000
00103   36*          COMMON/ CIMPL / IMPL                                                  000000
00104   37*          COMMON / CSIMUL / DUM(6), TINC, TMAX                                  000000
00105   38*          REAL MPO,MP1,MP2,MP3,MP4                                              000000
00105   39*   C                                                                            000000
00105   40*   C     LOCAL VARIABLES                                                        000000
00105   41*   C                                                                            000000
00105   42*   C                                                                            000000
00105   43*   C     R(K) IS THE POWER REQUEST AT PORT K                                    000000
00106   44*          REAL R(4)                                                             000000
00106   45*   C                                                                            000000
00106   46*   C     PR(K) IS THE PRIORITY ASSIGNED TO PORT K                               000000
00107   47*          REAL PR(4)                                                            000000
00107   48*   C                                                                            000000
00107   49*   C     W(K) IS THE WEIGHT ASSIGNED TO PORT K                                  000000
00110   50*          REAL W(4)                                                             000000
00110   51*   C                                                                            000000
00110   52*   C     MP(K) IS MAXIMUM POWER TO BE ALLOCATED TO PORT K                       000000
00111   53*          REAL MP(4)                                                            000000
00111   54*   C                                                                            000000
00111   55*   C     SW(I) IS THE SUM OF THE WEIGHTS ASSIGNED TO PRIORITY-I PORTS           000000
00112   56*          REAL SW(4)                                                            000000
00112   57*   C                                                                            000000
00112   58*   C     SMP(I) IS THE SUM OF THE MAXIMUM POWER AT PRIORITY-I PORTS             000000
00113   59*          REAL SMP(4)                                                           000000
00113   60*   C                                                                            000000
00113   61*   C     FRU IS "FAIR SHARE" UNIT FOR PRIORITY-I PORTS                          000000
00113   62*   C                                                                            000000
00113   63*   C     FR(K) IS THE COMPUTED "FAIR SHARE" REQUEST FOR PORT K                  000000
00114   64*          REAL FR(4)                                                            000000
00114   65*   C                                                                            000000
00114   66*   C     LL IS THE LOAD LEFT AT EACH POINT IN THE ITERATION                     000000
00115   67*          REAL LL,LOLD                                                          000000
00115   68*   C                                                                            000000
00115   69*   C     IF IMPL IS ZERO, THEN ASSIGN DEFAULT VALUES                            000000
00116   70*          IF (IMPL .GT. 0) GO TO 40                                             000000
00120   71*          RO = 0.0                                                              000002
00121   72*          IF (PR1 .EQ. 0.99999) PR1 = 1.0                                       000003
00123   73*          IF (PR2 .EQ. 0.99999) PR2 = 2.0                                       000010
00125   74*          IF (PR3 .EQ. 0.99999) PR3 = 3.0                                       000015
00127   75*          IF (PR4 .EQ. 0.99999) PR4 = 4.0                                       000022
00131   76*          IF (MP1 .EQ. 0.99999) MP1 = 1.0E8                                     000027
00133   77*          IF (MP2 .EQ. 0.99999) MP2 = 1.0E8                                     000034
00135   78*          IF (MP3 .EQ. 0.99999) MP3 = 1.0E8                                     000041
00137   79*          IF (MP4 .EQ. 0.99999) MP4 = 1.0E8                                     000046
00141   80*          IF(P1  .EQ. .99999) P1=0.0                                            000053
```


PA

```
00143      81*          IF(P2  .EQ. .99999) P2=0.0                                  000057
00145      82*          IF(P3  .EQ. .99999) P3= 0.0                                 000063
00147      83*          IF(P4  .EQ. .99999) P4=0.0                                  000067
00151      84*          SR=0.                                                       000073
00152      85*          PC1=0.                                                      000074
00153      86*          PC2=0.                                                      000075
00154      87*          PC3=0.                                                      000076
00155      88*          PC4=0.                                                      000077
00156      89*          TINC1= 0.5*TINC                                             000100
00157      90*       40 CONTINUE                                                    000104
00157      91*    C                                                                 000104
00157      92*    C     IF THE TOTAL MAXIMUM POWER IS .LE. TOTAL POWER              000104
00157      93*    C     REQUESTED, THEN SUBMIT REQUESTS AT MAX-POWER, SET REQUEST   000104
00157      94*    C     SURPLUS EQUAL TO THE DIFFERENCE, AND RETURN                 000104
00160      95*          PC = P1 + P2 + P3 + P4                                      000104
00161      96*          IF(PR1.LE.0.0) MP1=0.                                       000110
00163      97*          IF(PR2.LE.0.0) MP2=0.                                       000114
00165      98*          IF(PR3.LE.0.0) MP3=0.                                       000120
00167      99*          IF(PR4.LE.0.0) MP4=0.                                       000124
00171     100*          MPO = MP1 + MP2 + MP3 + MP4                                 000130
00172     101*          IF (MPO .GT. RO) GO TO 80                                   000135
00174     102*          R1 = MP1/EF1                                                000140
00175     103*          R2 = MP2/EF2                                                000143
00176     104*          R3 = MP3/EF3                                                000146
00177     105*          R4 = MP4/EF4                                                000151
00200     106*          SP = RO - MPO                                               000154
00201     107*          GO TO 500                                                   000157
00202     108*       80 CONTINUE                                                    000161
00202     109*    C                                                                 000161
00202     110*    C     PROCEED WITH ALLOCATION ALGORITHM SINCE THE SUM OF          000161
00202     111*    C     ALL MAXIMUM POWER INPUTS EXCEEDS THE TOTAL REQUEST RO       000161
00202     112*    C                                                                 000161
00202     113*    C     INITIALIZATION                                              000161
00203     114*          LL = RO                                                     000161
00204     115*          R1 = 0.0                                                    000162
00205     116*          R2 = 0.0                                                    000163
00206     117*          R3 = 0.0                                                    000164
00207     118*          R4 = 0.0                                                    000165
00210     119*          SP = 0.0                                                    000166
00210     120*    C                                                                 000166
00210     121*    C     IF THE TOTAL REQUEST (OR LOAD) IS ZERO, THEN RETURN         000166
00211     122*          IF (RO .LE. 0.0) GO TO 500                                  000167
00213     123*          R(1)=R1                                                     000171
00214     124*          R(2)=R2                                                     000173
00215     125*          R(3)=R3                                                     000175
00216     126*          R(4)=R4                                                     000177
00217     127*          PR(1) = PR1                                                 000201
00220     128*          PR(2) = PR2                                                 000203
00221     129*          PR(3) = PR3                                                 000205
00222     130*          PR(4) = PR4                                                 000207
00223     131*          W(1) = W1                                                   000211
00224     132*          W(2) = W2                                                   000213
00225     133*          W(3) = W3                                                   000215
00226     134*          W(4) = W4                                                   000217
00[illegible]  135*     MP(1) = MP1                                                 000221
00[illegible]  136*     MP(2) = MP2                                                 000223
00[illegible]  137*     MP(3) = MP3                                                 000225
```


PA

```
00232     138*          MP(4) = MP4                                                  000227
00232     139*    C                                                                  000227
00232     140*    C                                                                  000227
00232     141*    C     ITERATE ON PRIORITY I FOR I = 1, 2, 3, 4                     000227
00232     142*    C                                                                  000227
00233     143*          DO 1000 I = 1, 4                                             000235
00233     144*    C                                                                  000235
00236     145*          XI = I                                                       000235
00236     146*    C     OBTAIN SUM OF MAXIMUM POWER FOR PORTS WITH PRIORITY I        000235
00237     147*          SMP(I) = 0.0                                                 000240
00240     148*          DO 100 K = 1, 4                                              000244
00243     149*          IF (PR(K) .EQ. XI) SMP(I) = SMP(I) + MP(K)                   000244
00245     150*      100 CONTINUE                                                     000253
00245     151*    C                                                                  000253
00245     152*    C     IF NO PRIORITY-I MAXIMUM POWER EXISTS, THEN PROCEED WITH     000253
00245     153*    C     THE NEXT HIGHER PRIORITY                                     000253
00247     154*          IF (SMP(I) .EQ. 0.0) GO TO 1000                              000253
00247     155*    C                                                                  000253
00247     156*    C     IF THE SUM OF ALL PRIORITY-I MAXIMUM POWER .GT. LOAD         000253
00247     157*    C     LEFT, THEN GO AROUND                                         000253
00251     158*          IF (SMP(I) .GT. LL) GO TO 400                                000255
00251     159*    C                                                                  000255
00251     160*    C     THE SUM OF ALL PRIORITY-I MAXIMUM POWER .LE. LOAD            000255
00251     161*    C     LEFT, SO SUBMIT EACH PRIORITY-I REQUEST                      000255
00253     162*          DO 200 K = 1, 4                                              000264
00256     163*          IF (PR(K) .EQ. XI) R(K) = MP(K)                              000264
00260     164*      200 CONTINUE                                                     000272
00260     165*    C                                                                  000272
00260     166*    C     UPDATE LOAD LEFT                                             000272
00262     167*          LL = LL - SMP(I)                                             000272
00262     168*    C                                                                  000272
00262     169*    C     IF THE REMAINING LOAD IS ZERO, THEN EXIT THE ITERATION       000272
00263     170*          IF (LL .LE. 0.0) GO TO 2000                                  000275
00263     171*    C                                                                  000275
00263     172*    C     OTHERWISE, PROCEED WITH NEXT HIGHER PRIORITY                 000275
00265     173*          GO TO 1000                                                   000277
00265     174*    C                                                                  000277
00266     175*      400 CONTINUE                                                     000301
00266     176*    C                                                                  000301
00266     177*    C     THE SUM OF THE PRIORITY-I MAXIMUM POWER EXCEEDS THE          000301
00266     178*    C     LOAD LEFT, SO COMPUTE AND SUBMIT FAIR SHARE REQUESTS         000301
00266     179*    C      TO EACH PRIORITY-I PORT                                     000301
00266     180*    C                                                                  000301
00267     181*      600 CONTINUE                                                     000301
00267     182*    C                                                                  000301
00267     183*    C     SAVE LL FOR LATER REFERENCE                                  000301
00270     184*          LOLD = LL                                                    000301
00270     185*    C                                                                  000301
00270     186*    C     DETERMINE FAIR SHARE UNITS FOR ALL PRIORITY-I                000301
00270     187*    C     PORTS TO WHICH NO REQUEST HAS BEEN SUBMITTED                 000301
00271     188*          SW(I) = 0.0                                                  000302
00272     189*          DO 700 K = 1, 4                                              000306
00275     190*          IF (R(K) .NE. 0.0) GO TO 700                                 000306
00277     191*          IF (PR(K) .EQ. XI) SW(I) = SW(I) + W(K)                      000307
00301     192*      700 CONTINUE                                                     000317
00303     193*          FRU = 1.0 / SW(I)                                            000317
00303     194*    C                                                                  000317
```


PA

```
00303      C     FIRST, SUBMIT FAIR SHARE REQUESTS TO PORTS FOR WHICH THE                000317
00303      C     FAIR SHARE REQUEST EXCEEDS THE MAXIMUM POWER.  CONSIDER ONLY            000317
00303      C     PORTS TO WHICH NO REQUEST HAS BEEN SUBMITTED                            000317
00304            DO 800 K = 1, 4                                                         000325
00307            IF (R(K) .NE. 0.0) GO TO 800                                            000325
00311            IF (PR(K) .NE. XI) GO TO 800                                            000326
00311      C                                                                             000326
00311      C     COMPUTE FAIR SHARE                                                      000326
00313            FR(K) = (W(K) * FRU) * LL                                               000331
00313      C                                                                             000331
00313      C     IF FAIR SHARE EXCEEDS MAXIMUM POWER, THEN SUBMIT REQUEST                000331
00314            IF (FR(K) .GE. MP(K)) R(K) = MP(K)                                      000335
00314      C     - - - AND REDUCE LOAD LEFT TALLY                                        000335
00316            IF (FR(K) .GE. MP(K)) LL = LL - MP(K)                                   000343
00320        800 CONTINUE                                                                000354
00320      C                                                                             000354
00320      C     IF LL .NE. LOLD, THEN LL WAS REDUCED DURING THE                         000354
00320      C     PROCESSING IN THE "DO 800" LOOP ABOVE.  THIS CHANGES                    000354
00320      C     THE FAIR SHARE COMPUTATION.  IT IS THEREFORE                            000354
00320      C     NECESSARY TO GO BACK THROUGH THE "DO 800" LOOP IN                       000354
00320      C     ORDER TO RECONSIDER ANY PORT WHICH MAY NOW                              000354
00320      C     SATISFY THE REQUIREMENT THAT FR(K) .GE. MP(K).  ONLY                    000354
00320      C     PRIORITY-I PORTS TO WHICH NO REQUEST HAS BEEN                           000354
00320      C     MADE ARE ELIGIBLE FOR RECONSIDERATION                                   000354
00322            IF (LL .LT. LOLD) GO TO 600                                             000354
00322      C                                                                             000354
00322      C     FINALLY, SUBMIT REQUESTS TO THOSE PORTS FOR WHICH THE FAIR SHARE        000354
00322      C     .LT. THAN THEIR MAXIMUM POWER.  CONSIDER ONLY                           000354
00322      C     PRIORITY-I PORTS TO WHICH NO REQUEST HAS BEEN SUBMITTED                 000354
00324            DO 900 K = 1, 4                                                         000363
00327            IF (R(K) .NE. 0.0) GO TO 900                                            000363
00331            IF (PR(K) .NE. XI) GO TO 900                                            000364
00333            R(K) = FR(K)                                                            000367
00334        900 CONTINUE                                                                000373
00336            LL=0.0                                                                  000373
00337            GO TO 2000                                                              000374
00337      C                                                                             000374
00340       1000 CONTINUE                                                                000401
00340      C                                                                             000401
00342       2000 CONTINUE                                                                000401
00342      C                                                                             000401
00342      C     FINALLY, ASSIGN OUTPUTS TO NON-SUBSCRIPTED FORMAL PARAMETERS.           000401
00342      C     ALSO, MODIFY ALL REQUESTS ACCORDING TO THE INPUT EFFICIENCIES           000401
00343            R1 = R(1) / EF1                                                         000401
00344            R2 = R(2) / EF2                                                         000403
00345            R3 = R(3) / EF3                                                         000406
00346            R4 = R(4) / EF4                                                         000411
00347            SP = LL                                                                 000414
00350        500 IF(IMPL.LE.1) RETURN                                                    000417
00352            SPO= SR                                                                 000425
00353            SR=SR+ RO*TINC1                                                         000427
00354            IF(SR.LE.0.) RETURN                                                     000433
00356            SRO=SRO/SR                                                              000441
00357            SRI= TINC1*100./SR                                                      000444
00360            PC1= PC1*SRO + P1*SRI                                                   000450
00361            PC2= PC2*SRO + P2*SRI                                                   000454
00362            PC3= PC3*SRO + P3*SRI                                                   000462
```

```
00363    252*        PC4= PC4*SRO + P4*SRI                    000470
00364    253*        RETURN                                   000476
00365    254*        END                                      000751
```


PA

7.28 POWER DIVIDER

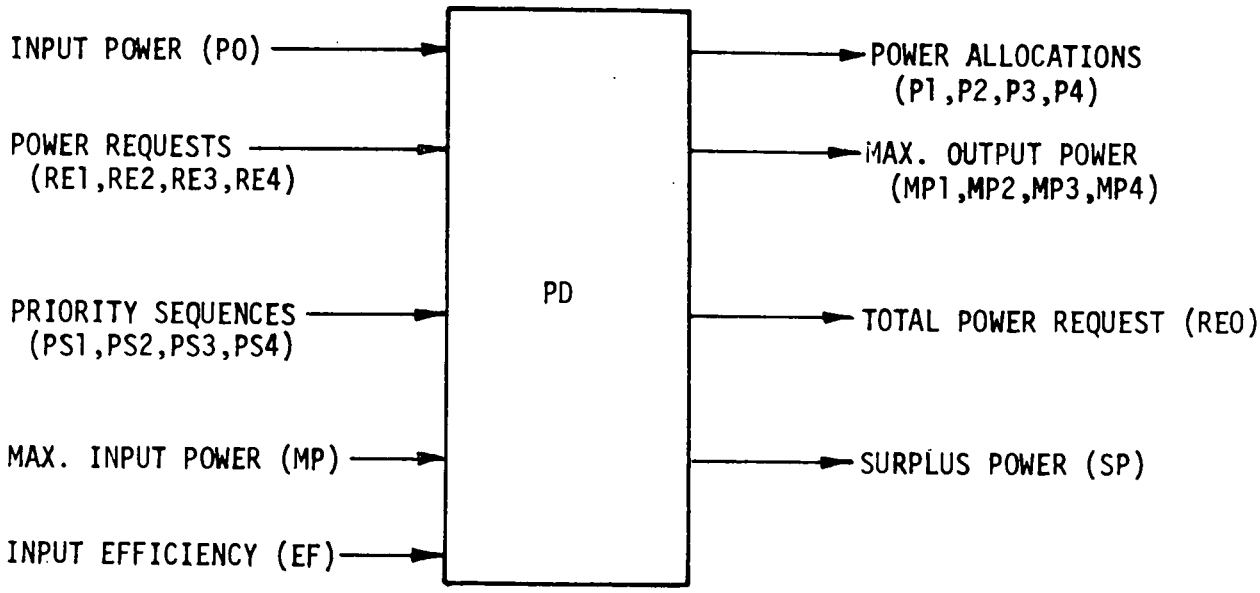

This component allocates power to four ports plus surplus based on priority, port requests, and allocation weights for equal priority ports. Each port is assigned a priority sequence from 1 to 4, and a weighting $F_i>0$, i=1,2,3,4 for proportional allocation among equal priority ports. If power available exceeds the power requested for a set of ports of equal priority, then the remaining power is allocated to ports having the next highest priority. If power available is less than the power requested for ports of equal priority then power is allocated between them in proportion to their respective allocation weights.

The total power request is the sum of the port requests divided by input efficiency. The maximum power outputs MP1,...MP4 are necessary for direct connections to a power accumulator PA. These variables may be used as maximum power inputs to other components, although such connections are not required. (See 1.2.3 for further discussion.)

Inputs[1]

Parameter/Port		Description	Units
P	0	Input power	kw
RE	1,2,3,4	Power requests of output ports	kw
PS	1,2,3,4	Priority sequence (default = 1,2,3,4)	-
F	1,2,3,4	Allocation weight (for equal priorities)	-
MP		Maximum input power (default = 1×10^8)	kw
EF		Input efficiency	-

Outputs

Variable/Port			
P	1,2,3,4	Output power for port i	kw
RE	0	Output power request	kw
SP		Surplus power	kw
MP	1,2,3,4	Output maximum power based on MP	kw

[1] No capital costs assigned since this is an allocation component, not a physical device.

CALCULATION LOGIC

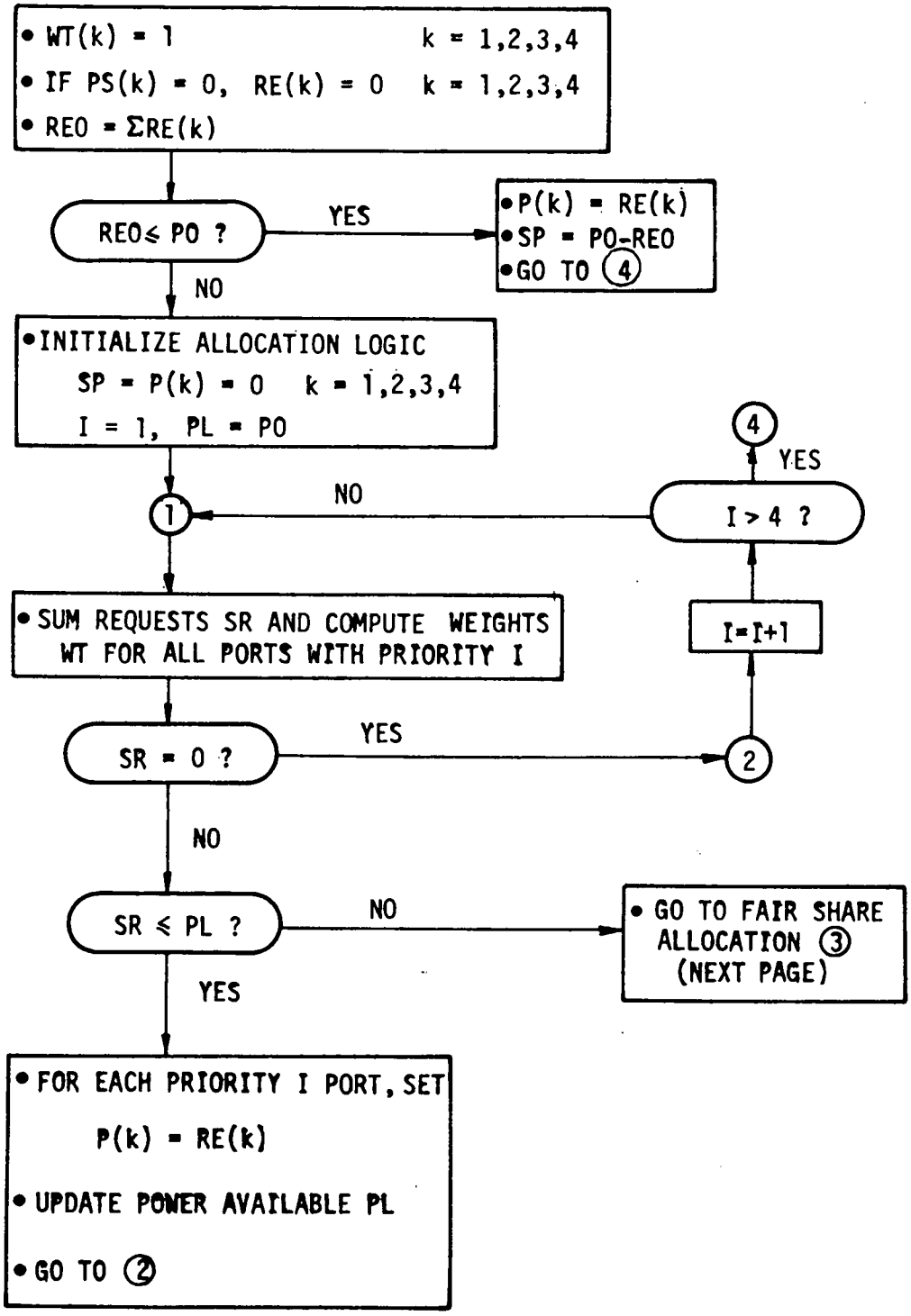

PD FAIR SHARE ALLOCATION

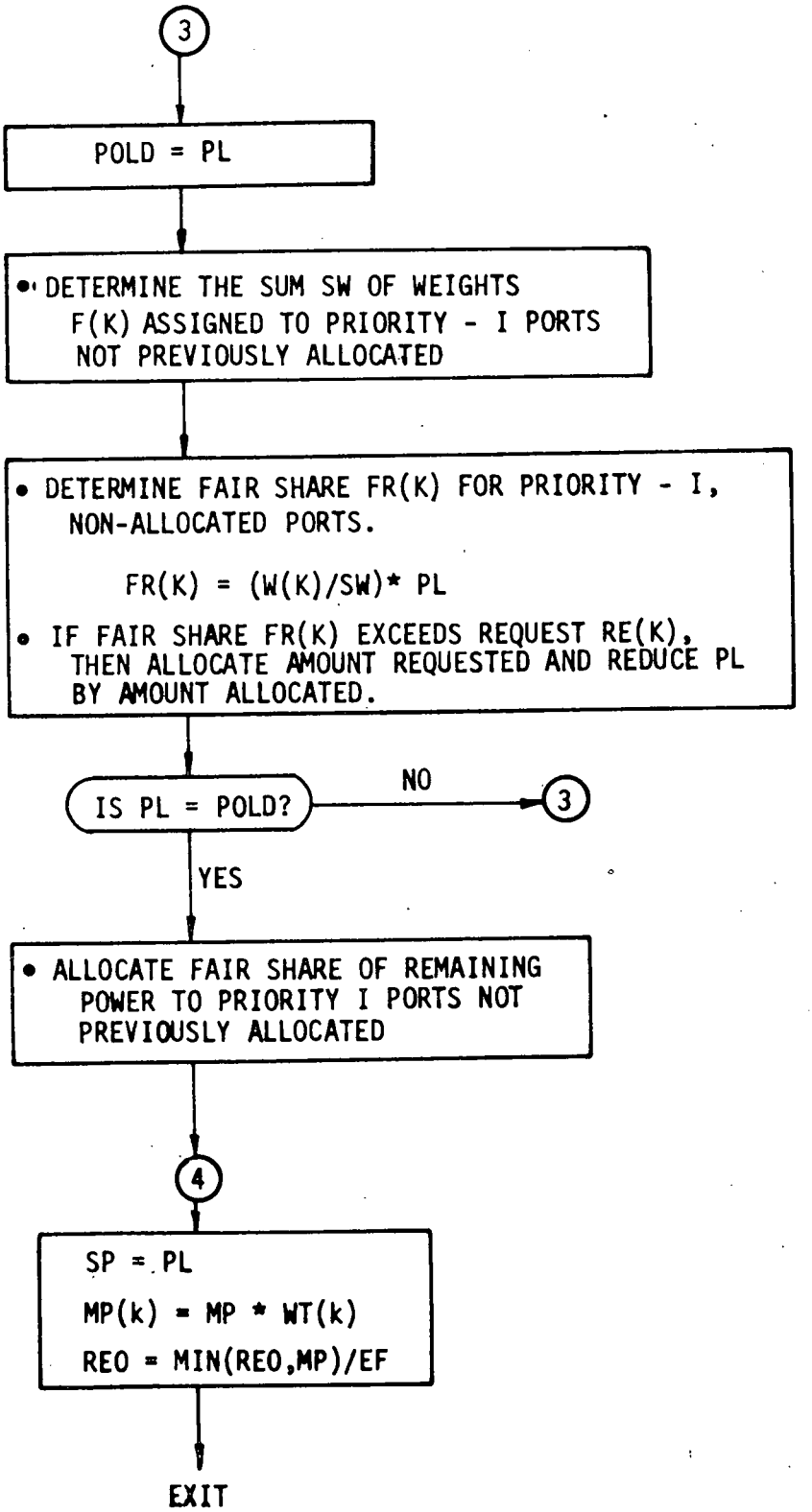

```
SUBROUTINE PD          ENTRY POINT 000452

STORAGE USED  CODE(1) 000642; DATA(0) 000106; BLANK COMMON(2) 000000

 COMMON BLOCKS

 0003   CIMPL  000001

EXTERNAL REFERENCES (BLOCK, NAME)

 0004   NERR3$

STORAGE ASSIGNMENT  (BLOCK, TYPE, RELATIVE LOCATION, NAME)

 0001   000371 1000L     0001   000172 216G     0001   000202 224G     0001   000263 253G     0001   000303 270G
 0001   000406 3000L     0001   000322 302G     0001   000357 322G     0001   000045 40L      0001   000276 400L
 0001   000276 600L      0001   000313 700L     0001   000116 80L      0001   000350 800L     0001   000366 900L
 0000 R 000030 FR        0000 R 000046 FRU      0000 R 000035 F1       0000 R 000036 F2       0000 R 000037 F3
 0000 R 000040 FN        0000 I 000041 I        0003 I 000000 IMPL     0000   000055 INJP$    0000 I 000044 K
 0000 R 000000 P         0000 R 000034 PL       0000 R 000045 POLD     0000 R 000010 PR       0000 R 000004 R
 0000 R 000024 SR        0000 R 000020 SW       0000 R 000014 W        0000 R 000043 WT       0000 R 000042 XI
```

```
00100      1*      CPD                                                                    000000
00101      2*              SUBROUTINE PD(                                                 000000
00101      3*          1       P1, P2, P3, P4,                                            000000
00101      4*          2       RO,                                                        000000
00101      5*          3       SP,PM1,PM2,PM3,PM4,                                        000000
00101      6*          4       PO,                                                        000000
00101      7*          5       R1, R2, R3, R4,                                            000000
00101      8*          6       PR1, PR2, PR3, PR4,                                        000000
00101      9*          7       W1, W2, W3, W4, PM, EF)                                    000000
00101     10*      C                                                                      000000
00101     11*      C     PURPOSE.   MODEL POWER DIVIDER                                   000000
00101     12*      C                                                                      000000
00101     13*      C     METHOD.   PRIMARY FLOW ALLOCATION RESULTING FROM PRIORITY        000000
00101     14*      C     ASSIGNMENTS.   SECONDARY FLOW ALLOCATION RESULTING               000000
00101     15*      C     FROM WEIGHT ASSIGNMENTS.                                         000000
00101     16*      C     THAT IS, TOTAL AVAILABLE POWER IS ALLOCATED                      000000
00101     17*      C     ACCORDING TO                                                     000000
00101     18*      C       * PORT REQUESTS                                                000000
00101     19*      C       * PORT PRIORITY (HIGHEST PRIORITY = 1)                         000000
00101     20*      C       * PORT WEIGHTS (IN CASE OF EQUAL PRIORTIES)                    000000
00101     21*      C                                                                      000000
00101     22*      C     ALLOCATION SCHEME.                                               000000
00101     23*      C     IS SUM OF ALL REQUESTS .LT. POWER AVAILABLE PO                   000000
00101     24*      C     YES.                                                             000000
00101     25*      C       FULFILL EACH REQUEST                                           000000
```


PJ

```
00101   26*   C      UPDATE POWER AVAILABLE                                    000000
00101   27*   C      EXIT                                                      000000
00101   28*   C    NO.                                                         000000
00101   29*   C      IS SUM OF ALL PRIORITY-1 REQUESTS .LT. PO                 000000
00101   30*   C      YES.                                                      000000
00101   31*   C        FULFILL EACH PRIORITY-1 REQUEST                         000000
00101   32*   C        UPDATE POWER AVAILABLE (TO PL)                          000000
00101   33*   C        GO ON TO PRIORITY-2 REQUESTS                            000000
00101   34*   C      NO.                                                       000000
00101   35*   C        ALLOCATE "FAIR SHARE" TO EACH PRIORITY-1 PORT           000000
00101   36*   C        EXIT.                                                   000000
00101   37*   C        IS SUM OF ALL PRIORITY-2 REQUESTS .LT. PL               000000
00101   38*   C                                                                000000
00101   39*   C     AND SO ON AND SO FORTH                                     000000
00101   40*   C                                                                000000
00101   41*   C    FORMAL ARGUMENT DEFINITION.                                 000000
00101   42*   C    P1,...., P4      POWER ALLOCATIONS IN KW  (OUTPUTS)         000000
00101   43*   C    RC              TOTAL POWER REQUESTED    (OUTPUT)          000000
00101   44*   C    SP               SURPLUS POWER            (OUTPUT)          000000
00101   45*   C    PM1,....,PM4    PORT MAXIMUM OUTPUT POWER IN KW      (OUTPUT) 000000
00101   46*   C    PO               TOTAL POWER INPUT IN KW  (INPUT)           000000
00101   47*   C    R1,...., R4      PORT REQUESTS IN KW      (INPUTS)          000000
00101   48*   C    PR1,...., PR4    PORT PRIORITIES          (INPUTS)          000000
00101   49*   C    W1,...., W4      PORT WEIGHTS             (INPUTS)          000000
00101   50*   C    PM               MAXIMUM INPUT POWER IN KW  (INPUT)         000000
00101   51*   C    EF               INPUT EFFICIENCY      (INPUT)              000000
00101   52*   C                                                                000000
00101   53*   C     COMMON STORAGE                                             000000
00103   54*          COMMON/ CIMPL / IMPL                                      000000
00103   55*   C                                                                000000
00103   56*   C    LOCAL VARIABLES                                             000000
00103   57*   C                                                                000000
00103   58*   C    P(K) IS THE POWER ALLOCATED TO PORT K                       000000
00104   59*          REAL P(4)                                                 000000
00104   60*   C                                                                000000
00104   61*   C    R(K) IS THE POWER REQUEST AT PORT K                         000000
00105   62*          REAL R(4)                                                 000000
00105   63*   C                                                                000000
00105   64*   C    PR(K) IS THE PRIORITY ASSIGNED TO PORT K                    000000
00106   65*          REAL PR(4)                                                000000
00106   66*   C                                                                000000
00106   67*   C    W(K) IS THE WEIGHT ASSIGNED TO PORT K                       000000
00107   68*          REAL W(4)                                                 000000
00107   69*   C                                                                000000
00107   70*   C    SW(I) IS THE SUM OF THE WEIGHTS ASSIGNED TO PRIORITY-I PORTS 000000
00110   71*          REAL SW(4)                                                000000
00110   72*   C                                                                000000
00110   73*   C    SR(I) IS THE SUM OF THE REQUESTS AT PRIORITY-I PORTS        000000
00111   74*          REAL SR(4)                                                000000
00111   75*   C                                                                000000
00111   76*   C    FRU IS "FAIR SHARE" UNIT FOR PRIORITY-I PORTS               000000
00111   77*   C                                                                000000
00111   78*   C    FR(K) IS THE COMPUTED "FAIR SHARE" ALLOCATION TO PORT K     000000
00112   79*          REAL FR(4)                                                000000
00112   80*   C                                                                000000
00112   81*   C    PL IS THE POWER LEFT AT EACH POINT IN THE ITERATION         000000
00113   82*          REAL PL                                                   000000
```


PD

```
00113      83*      C                                                                    000000
00113      84*      C     IF IMPL IS ZERO, THEN ASSIGN DEFAULT VALUES                    000000
00114      85*            IF (IMPL .GT. 0) GO TO 40                                      000000
00116      86*            R1 = 0.0                                                       000002
00117      87*            R2 = 0.0                                                       000003
00120      88*            R3 = 0.0                                                       000004
00121      89*            R4 = 0.0                                                       000005
00122      90*            IF(PM.EQ. .99999) PM=1.E8                                      000006
00124      91*            IF (PR1 .EQ. 0.99999) PR1 = 1.0                                000013
00126      92*            IF (PR2 .EQ. 0.99999) PR2 = 2.0                                000020
00130      93*            IF (PR3 .EQ. 0.99999) PR3 = 3.0                                000025
00132      94*            IF (PR4 .EQ. 0.99999) PR4 = 4.0                                000032
00134      95*            IF(PM .EQ. .99999) PM= 1.E8                                    000037
00134      96*      C                        INITIALIZATION OF F"S                        000037
00134      97*      C                                                                    000037
00136      98*         40 CONTINUE                                                       000045
00137      99*            F1= 1.                                                         000045
00140     100*            F2= 1.                                                         000046
00141     101*            F3= 1.                                                         000047
00142     102*            F4= 1.                                                         000050
00142     103*      C                                                                    000050
00142     104*      C     IF THE TOTAL POWER REQUESTED IS .LE. TOTAL POWER               000050
00142     105*      C     INPUT, THEN SATISFY REQUESTS, SET POWER SURPLUS                000050
00142     106*      C     EQUAL TO THE DIFFERENCE, AND RETURN                            000050
00143     107*            IF(PR1.LE.0.0) R1=0.0                                          000051
 0145     108*            IF(PR2.LE.0.0) R2=0.0                                          000055
00147     109*            IF(PR3.LE.0.0) R3=0.0                                          000061
00151     110*            IF(PR4.LE.0.0) R4=0.0                                          000065
00153     111*            RD = R1 + R2 + R3 + R4                                         000071
00154     112*            IF (RD .GT. PD) GO TO 80                                       000076
00156     113*            P1 = R1                                                        000101
00157     114*            P2 = R2                                                        000103
00160     115*            P3 = R3                                                        000105
00161     116*            P4 = R4                                                        000107
00162     117*            SP = PD - RD                                                   000111
00163     118*            GO TO 3000                                                     000114
00164     119*         80 CONTINUE                                                       000116
00164     120*      C                                                                    000116
00164     121*      C     PROCEED WITH ALLOCATION ALGORITHM SINCE THE SUM OF             000116
00164     122*      C     ALL REQUESTS EXCEEDS THE TOTAL AVAILABLE POWER PD              000116
00164     123*      C                                                                    000116
00164     124*      C     INITIALIZATION                                                 000116
00165     125*            PL = PD                                                        000116
00166     126*            P1 = 0.0                                                       000117
00167     127*            P2 = 0.0                                                       000120
00170     128*            P3 = 0.0                                                       000121
00171     129*            P4 = 0.0                                                       000122
00172     130*            SP = 0.0                                                       000123
00172     131*      C                                                                    000123
00172     132*      C     IF THE TOTAL POWER IS ZERO, THEN RETURN                        000123
00173     133*            IF (PD .EQ. 0.0) GO TO 3000                                    000124
00175     134*            P(1) = P1                                                      000126
00176     135*            P(2) = P2                                                      000130
00177     136*            P(3) = P3                                                      000132
00200     137*            P(4) = P4                                                      000134
00201     138*            R(1) = R1                                                      000136
00202     139*            R(2) = R2                                                      000140
```

```
00203          R(3) = R3                                                 000142
00204          R(4) = R4                                                 000144
00205          PR(1) = PR1                                               000146
00206          PR(2) = PR2                                               000150
00207          PR(3) = PR3                                               000152
00210          PR(4) = PR4                                               000154
00211          W(1) = W1                                                 000156
00212          W(2) = W2                                                 000160
00213          W(3) = W3                                                 000162
00214          W(4) = W4                                                 000164
00214    C                                                               000164
00214    C                                                               000164
00214    C     ITERATE ON PRIORITY I FOR I = 1, 2, 3, 4                  000164
00214    C                                                               000164
00215          DO 1000 I = 1, 4                                          000172
00215    C                                                               000172
00220          XI = I                                                    000172
00220    C     OBTAIN SUM OF REQUESTS FROM PORTS WITH PRIORITY I         000172
00221          SR(I) = 0.0                                               000175
00222          WT=0.0                                                    000176
00223          DO 100 K = 1, 4                                           000202
00226          IF (PR(K) .EQ. XI) SR(I) = SR(I) + R(K)                   000202
00230          IF(PR(K) .EQ. XI) WT= WT+ W(K)                            000207
00232      100 CONTINUE                                                  000217
00232    C                                                               000217
00234          IF(PR1 .EQ. XI) F1= W1/WT                                 000217
00236          IF( PR2.EQ. XI) F2 =W2/WT                                 000225
00240          IF(PR3 .EQ. XI) F3= W3/WT                                 000233
00242          IF(PR4 .EQ. XI) F4= W4/WT                                 000241
00244          IF(PL.LE.0.0) GO TO 1000                                  000247
00244    C                                                               000247
00244    C     IF NO PRIORITY-I REQUESTS EXIST, THEN PROCEED WITH        000247
00244    C     THE NEXT HIGHER PRIORITY                                  000247
00246          IF (SR(I) .EQ. 0.0) GO TO 1000                            000252
00246    C                                                               000252
00246    C     IF THE SUM OF ALL PRIORITY-I REQUESTS .GT. POWER          000252
00246    C     AVAILABLE, THEN GO AROUND                                 000252
00250          IF (SR(I) .GT. PL) GO TO 400                              000254
00250    C                                                               000254
00250    C     THE SUM OF ALL PRIORITY-I REQUESTS .LE. POWER             000254
00250    C     AVAILABLE, SO FULFILL EACH PRIORITY-I REQUEST             000254
00252          DO 200 K = 1, 4                                           000263
00255          IF (PR(K) .EQ. XI) P(K) = R(K)                            000263
00257      200 CONTINUE                                                  000271
00257    C                                                               000271
00257    C     UPDATE POWER AVAILABLE                                    000271
00261          PL = PL - SR(I)                                           000271
00262          GO TO 1000                                                000274
00262    C                                                               000274
00263      400 CONTINUE                                                  000276
00263    C                                                               000276
00263    C     THE SUM OF THE PRIORITY-I REQUESTS EXCEEDS THE            000276
00263    C     POWER AVAILABLE, SO COMPUTE AND ALLOCATE FAIR             000276
00263    C     SHARE TO EACH PRIORITY-I PORT                             000276
00263    C                                                               000276
00264      600 CONTINUE                                                  000276
00264    C                                                               000276
```


PD

```
00264   197*   C      SAVE PL FOR LATER REFERENCE                                  000276
00265   198*          POLD = PL                                                    000276
00265   199*   C                                                                   000276
00265   200*   C      DETERMINE FAIR SHARE UNITS FOR ALL PRIORITY-I                000276
00265   201*   C      PORTS FOR WHICH NO ALLOCATION HAS BEEN MADE                  000276
00266   202*          SW(I) = 0.0                                                  000277
00267   203*          DO 700 K = 1, 4                                              000303
00272   204*          IF (P(K) .NE. 0.0) GO TO 700                                 000303
00274   205*          IF (PR(K) .EQ. XI) SW(I) = SW(I) + W(K)                      000304
00276   206*      700 CONTINUE                                                     000314
00300   207*          FRU = 1.0 / SW(I)                                            000314
00300   208*   C                                                                   000314
00300   209*   C      FIRST, ALLOCATE FAIR SHARE TO PORTS FOR WHICH THE            000314
00300   210*   C      FAIR SHARE EXCEEDS THE REQUEST.  CONSIDER ONLY PRIORITY-I    000314
00300   211*   C      PORTS, AND CONSIDER ONLY PORTS TO WHICH NO ALLOCATION        000314
00300   212*   C      HAS YET BEEN MADE                                            000314
00301   213*          DO 800 K = 1, 4                                              000322
00304   214*          IF (P(K) .NE. 0.0) GO TO 800                                 000322
00306   215*          IF (PR(K) .NE. XI) GO TO 800                                 000323
00306   216*   C                                                                   000323
00306   217*   C      COMPUTE FAIR SHARE                                           000323
00310   218*          FR(K) = (W(K) * FRU) * PL                                    000326
00310   219*   C                                                                   000326
00310   220*   C      IF FAIR SHARE EXCEEDS REQUEST, THEN FULFILL REQUEST          000326
00311   221*          IF (FR(K) .GE. R(K)) P(K) = R(K)                             000332
00311   222*   C      - - - AND REDUCE AVAILABLE POWER                             000332
00313   223*          IF (FR(K) .GE. R(K)) PL = PL - P(K)                          000340
00315   224*      800 CONTINUE                                                     000351
00315   225*   C                                                                   000351
00315   226*   C      IF PL .NE. POLD, THEN PL WAS REDUCED DURING THE              000351
00315   227*   C      PROCESSING IN THE "DO 800" LOOP ABOVE.  THIS CHANGES         000351
00315   228*   C      THE FAIR SHARE COMPUTATION.  IT IS THEREFORE                 000351
00315   229*   C      NECESSARY TO GO BACK THROUGH THE "DO 800" LOOP IN            000351
00315   230*   C      ORDER TO RECONSIDER ANY PORT WHICH MAY NOW                   000351
00315   231*   C      SATISFY THE REQUIREMENT THAT FR(K) .GE. R(K).  ONLY          000351
00315   232*   C      PRIORITY-I PORTS FOR WHICH NO ALLOCATION HAS BEEN            000351
00315   233*   C      MADE ARE ELIGIBLE FOR RECONSIDERATION                        000351
00317   234*          IF (PL .NE. POLD) GO TO 600                                  000351
00317   235*   C                                                                   000351
00317   236*   C      FINALLY, ALLOCATE POWER TO THOSE PORTS REQUESTING            000351
00317   237*   C      MORE THAN THEIR FAIR SHARE.  CONSIDER ONLY                   000351
00317   238*   C      PRIORITY-I PORTS FOR WHICH NO ALLOCATION HAS BEEN MADE       000351
00321   239*          DO 900 K = 1, 4                                              000357
00324   240*          IF (P(K) .NE. 0.0) GO TO 900                                 000357
00326   241*          IF (PR(K) .NE. XI) GO TO 900                                 000360
00330   242*          P(K) = FR(K)                                                 000363
00331   243*      900 CONTINUE                                                     000367
00333   244*          PL = 0.0                                                     000367
00333   245*   C                                                                   000367
00334   246*     1000 CONTINUE                                                     000373
00334   247*   C                                                                   000373
00334   248*   C                                                                   000373
00334   249*   C      FINALLY, ASSIGN OUTPUTS TO NON-SUBSCRIPTED                   000373
0033    250*   C      FORMAL PARAMETERS                                            000373
0033    251*          P1 = P(1)                                                    000373
0033    252*          P2 = P(2)                                                    000375
00340   253*          P3 = P(3)                                                    000377
```

```
00341   254*          P4 = P(4)                                  000401
00342   255*          SP = PL                                    000403
00343   256*     3000 PM1=PM*F1                                  000406
00344   257*          PM2=PM*F2                                  000410
00345   258*          PM3=PM*F3                                  000413
00346   259*          PM4=PM*F4                                  000416
00347   260*           RO= AMIN1(RO,PM)/EF                       000421
00350   261*          RETURN                                     000430
00351   262*          END                                        000641
```


PD

7.29 PRIORITY INTERRUPT

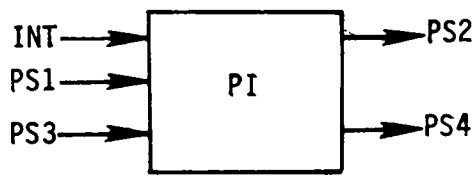

This component is used by the storage components to change priority of the power requests when minimum or maximum capacity is approached.

Inputs

Parameter/Port		Description
PS	1	Input priority for PS4 output
PS	3	Input priority for PS2 output (default=PS1)
INT		Interrupt flag

Outputs

Variable/Port		
PS	2	Output priority for charge cycle
PS	4	Output priority for discharge cycle

Equations

PS2 = PS1 if INT=0

PS2 = 1 if INT > 0

PS2 = 0 if INT < 0

PS4 = PS3 if INT ≤ 0

PS4 = 0 if INT > 0

```
SUBROUTINE PI        ENTRY POINT 000040

STORAGE USED  CODE(1) 000061; DATA(0) 000010; BLANK COMMON(2) 000000

 COMMON BLOCKS

 0003   CIMPL   000001

EXTERNAL REFERENCES (BLOCK, NAME)

 0004   NERR3$

STORAGE ASSIGNMENT  (BLOCK, TYPE, RELATIVE LOCATION, NAME)

 0001   000010 10L       0003 I 000000 IMPL      0000   000002 INJPS


00100      1*      CPI                                                          000000
00101      2*            SUBROUTINE PI(PS2,PS4,PS1,PS3,INT)                     000000
00101      3*      C                                                            000000
00101      4*      C   PURPOSE    CHANGE PRIORITY OF POWER ALLOCATION TO STORAGE COMPONENTS  000000
00101      5*      C                                                            000000
00101      6*      C   WRITTEN BY A.W.WARREN                          VERSION 1, APRIL 14 1977  000000
00101      7*      C                                                            000000
00101      8*      C   CALL SEQUENCE                                            000000
00101      9*      C              PS2 - OUTPUT PRIORITY (0 TO 4)                000000
00101     10*      C              PS4 - OUTPUT PRIORITY (COMPLEMENT TO PS2)     000000
00101     11*      C              PS1 - INPUT PRIORITY FOR PS2                  000000
00101     12*      C              PS3 - INPUT PRIORITY FOR PS4                  000000
00101     13*      C              INT - INTERRUPT FLAG                          000000
00101     14*      C                      0= NO INTERRUPT                       000000
00101     15*      C                      1= INCREASE ALLOCATION PRIORITY       000000
00101     16*      C                     -1= DECREASE ALLOCATION PRIORITY       000000
00101     17*      C                                                            000000
00103     18*            REAL INT                                               000000
00104     19*            COMMON /CIMPL/IMPL                                     000000
00105     20*            IF(IMPL.GT.0) GO TO 10                                 000000
00107     21*            IF(PS3.EQ. .99999) PS3=PS1                             000002
00107     22*      C                                                            000002
00111     23*         10 PS2=PS1                                                000010
00112     24*            PS4=PS3                                                000011
00113     25*            IF(INT.GT.0.) PS2=1.                                   000013
00115     26*            IF(INT.LT.0.) PS2=0.                                   000020
00117     27*            IF(INT.GT.0) PS4= 0.                                   000024
00121     28*            RETURN                                                 000030
00122     29*            END                                                    000060
```

PI

7.30 HYDRAULIC PUMP

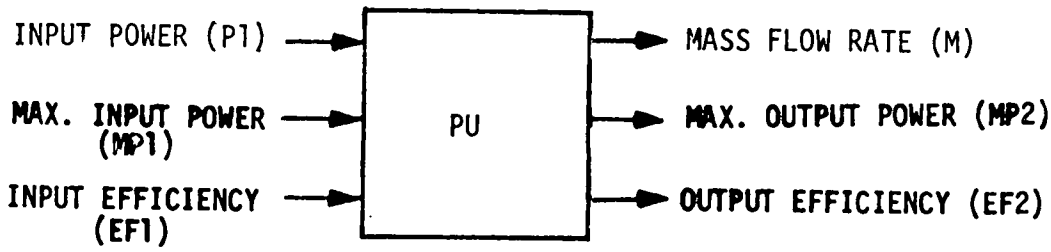

The hydraulic pump model is based on a constant speed design. The pump is assumed to be designed to a nominal operating point and input power. For off-design performance the pump efficiency is assumed to be functionally related to the square root of the mass flow rate.

Basic Equations

The output mass flow rate is based on the equations

M = P1*EFF/(C1*C2*H1)

EFF = 1 - (1-EFD)*SQRT(MD/M)

where C1, C2 are conversion constants

PU

Inputs

Parameter/Port		Description	Units
P	1	Input power	kw
H	1	Height of water above inlet	ft
EFD		Pump efficiency at design pt. (D = 0.90)	-
MD		Mass flow rate at design pt. (D = $2X10^5$)	gal/h
EF	1	Input product efficiency	-
MP	1	Input maximum charging rate	kw
MM		Maximum allowable mass flow rate (D = $3X10^5$)	gal/h
CK		Pump capacity cost coefficient[1] (D = 0.011)	
FØ		Pump exponent for cost calculations (D = 0.5)	-
Y		Pumphead exponent for cost calculations (D=0.25)	-

Outputs

Variable/Port			
M		Output mass flow rate	gal/h
EFF		Pump efficiency	-
CCØ		Pump cost/year	$
EF	2	Output product efficiency	-
MP	2	Maximum output power	kw

Statistics

M2U	Maximum output mass flow rate	gal/h

D - default values

[1]CK = capital cost (known unit)/((MD*481.2)**FO*H1 **Y * expected life time)

The calculation sequence and default values assume a constant speed hydraulic pump nominally rated for 120KW and located 200 ft. below a reservoir. The equations relating the various physical quantities and the cost estimates are based on first principles and the data presented in Reference 1, and the cost estimates on Reference 2.

Calculation Sequence

$$C1 = 0.377*10^{-6} \quad \frac{kwh}{ft-lb}$$

$$C2 = 8.3398 \text{ lb/gal}$$

1) Costs (first pass only)

$$CC = CK*(MD*481.2)^{F\emptyset}*H1**Y$$

1. L. Marks and T. Baumeister, "Mechanical Engineers Handbook", McGraw Hill, N.Y., 1958, Section 14, p. 19.
2. Carson and Fogleman, "Comparison of Methods for Converting Existing Power Plants to Pumped Storage Facilities", International Engineering Company, Inc., 1974.

Calculation Sequence Cont.

2) Mass flow rate and pump efficiency

If P1 $\leq$ 0, set EFF = 1, M = 0 and go to 3)

Solve the basic equations for M and EFF using:

$$X^3 - XA + B = 0$$

where

$$A = P1/(C1*C2*H1)$$

$$B = A*(1-EFD)*\sqrt{MD}$$

$$M = X^2$$

$$EFF = 1-(1-EFD)*\sqrt{MD}/X$$

3) Product efficiency and maximum charge rate

$$EF2 = EF1*EFF$$

$$MP2 = MIN(MP1*EFF,\quad MM*C1*C2*H1)$$

4) Compute Statistics and Costs

```
SUBROUTINE PU        ENTRY POINT 000216

STORAGE USED  CODE(1) 000313; DATA(0) 000033; BLANK COMMON(2) 000000

 COMMON BLOCKS

 0003   CIMPL   000001
 0004   CTIME   000001
 0005   CSIMUL  000010
 0006   COST    000001

EXTERNAL REFERENCES (BLOCK, NAME)

 0007   CUBIC
 0010   XPRR
 0011   SQRT
 0012   NERR3S

STORAGE ASSIGNMENT  (BLOCK, TYPE, RELATIVE LOCATION, NAME)

 0001   000073 100L      0001   000142 200L      0000 R 000004 ANS       0000 R 000002 A3        0000 R 000003 A4
 0006 R 000000 CCI       0000 R 000001 C1        0005   000000 DUM       0003 I 000000 IMPL      0000   000020 INJPS
 0004 R 000000 TIME      0005 R 000007 TMAX      0000 R 000000 TMAX1
```

```
00100      1*     CPU                                                                    000000
00101      2*          SUBROUTINE PU(M,EFF,CC,EF2,MP2,M2U,P1,H1,EFD,MD,EF1,MP1,MM        000000
00101      3*        1              ,CK,FO,Y)                                            000000
00101      4*     C                                                                      000000
00101      5*     C   PURPOSE    PERFORMANCE OF HYDRAULIC PUMP                           000000
00101      6*     C                                                                      000000
00101      7*     C   METHOD     COMPUTE PUMP FLOW RATES ASSUMING CONSTANT SPEED WITH    000000
00101      8*     C                                                                      000000
00101      9*     C              EFFICIENCY A FUNCTION OF SQRT(FLOW RATE)                000000
00101     10*     C                                                                      000000
00101     11*     C   WRITTEN BY F. O. MAHONY                  VERSION 1, MARCH 29 1977  000000
00101     12*     C                                                                      000000
00101     13*     C   CALL SEQUENCE                                                      000000
00101     14*     C        OUTPUTS                                                       000000
00101     15*     C             M   - OUTPUT MASS FLOW RATE, GAL/HR                      000000
00101     16*     C             EFF- PUMP EFFICIENCY                                     000000
00101     17*     C             CC  - PUMP COST/YEAR, $                                  000000
00101     18*     C             EF2 - OUTPUT PRODUCT EFFICIENCY                          000000
00101     19*     C             MP2 - MAXIMUM OUTPUT CHARGE RATE, KW                     000000
00101     20*     C             M2U - MAXIMUM OUTPUT MASS FLOW RATE, GAL/HR              000000
001       21*     C                                                                      000000
001       22*     C        INPUTS                                                        000000
001       23*     C             P1  - INPUT POWER, KW                                    000000
```


PU

```
00101   24*   C          H1  - HEIGHT OF WATER ABOVE INLET, FT                    000000
00101   25*   C          EFD - PUMP EFFICIENCY AT DESIGN POINT                    000000
00101   26*   C          MD  - MASS FLOW RATE AT DESIGN POINT, GAL/HR             000000
00101   27*   C          EF1 - INPUT PRODUCT EFFICIENCY                           000000
00101   28*   C          MP1 - INPUT MAXIMUM CHARGING RATE, KW                    000000
00101   29*   C          MM  - MAXIMUM ALLOWABLE MASS FLOW RATE, GAL/HR           000000
00101   30*   C          CK  - PUMP CAPACITY COST COEFFICIENT                     000000
00101   31*   C          FO  - PUMP EXPONENT FOR COST CALCULATIONS                000000
00101   32*   C          Y   - PUMP HEAD EXPONENT FOR COST CALCULATIONS           000000
00101   33*   C                                                                   000000
00103   34*        COMMON /CIMPL/IMPL /CTIME/TIME/CSIMUL/DUM(7),TMAX /COST/CCI    000000
00103   35*   C                                                                   000000
00104   36*        REAL M,MP2,M2U,MD,MP1,MM                                       000000
00104   37*   C                                                                   000000
00105   38*        IF(IMPL.GT.0)GO TO 100                                         000000
00105   39*   C                                                                   000000
00107   40*        TMAX1=TMAX*.99999                                              000002
00107   41*   C                                                                   000002
00110   42*        C1= 3.1441E-6                                                  000005
00110   43*   C                                                                   000005
00111   44*        IF(EFD.EQ. .99999)EFD=0.9                                      000007
00113   45*        IF(MD .EQ. .99999)MD =2.0E5                                    000014
00115   46*        IF(MP1.EQ. .99999)MP1=1.E8                                     000021
00117   47*        IF(MM .EQ. .99999)MM =3.0E5                                    000026
00121   48*        IF(CK .EQ. .99999)CK =0.011                                    000033
00123   49*        IF(FO .EQ. .99999)FO =0.5                                      000040
00125   50*        IF(Y  .EQ. .99999)Y  =0.25                                     000045
00127   51*        CC =CK*(MD*481.2)**FO*H1**Y                                    000052
00127   52*   C                                                                   000052
00130   53*        M2U =0.0                                                       000071
00131   54*    100 EFF= 1.0                                                       000073
00132   55*        M= 0.0                                                         000074
00133   56*        IF(P1 .LE. 0.0) GO TO 200                                      000075
00133   57*   C                                                                   000075
00133   58*   C                 SOLVE CUBIC EQUATION FOR M AND EFF               000075
00133   59*   C                                                                   000075
00135   60*        A3= -P1/(C1*H1)                                                000100
00136   61*        A4 =-A3*(1.0-EFD)*SQRT(MD)                                     000105
00136   62*   C                                                                   000105
00137   63*        CALL CUBIC(A3,A4,ANS)                                          000115
00140   64*        IF(ANS.LE.0.) GO TO 200                                        000122
00140   65*   C                                                                   000122
00142   66*        M  =ANS**2                                                     000125
00143   67*        EFF=1.0-(1.0-EFD)*SQRT(MD)/ANS                                 000130
00143   68*   C                                                                   000130
00143   69*   C                 PRODUCT EFFICIENCY AND CHARGE RATE               000130
00143   70*   C                                                                   000130
00144   71*    200 EF2=EF1*EFF                                                    000142
00145   72*        MP2=AMIN1(MP1*EFF,MM*H1*C1)                                    000144
00145   73*   C                                                                   000144
00146   74*        IF(IMPL.LE.1)RETURN                                            000156
00146   75*   C                                                                   000156
00146   76*   C                 STATISTICS                                       000156
00146   77*   C                                                                   000156
00150   78*        M2U=AMAX1(M2U,M )                                              000165
00150   79*   C                                                                   000165
00151   80*        IF(TIME.LT.TMAX1)RETURN                                        000173
```

```
00151     81*     C                                                    000173
00153     82*             CCI=CCI+CC                                   000202
00153     83*     C                                                    000202
00154     84*             RETURN                                       000205
00155     85*             END                                          000312
```

7.31 AC-DC RECTIFIER

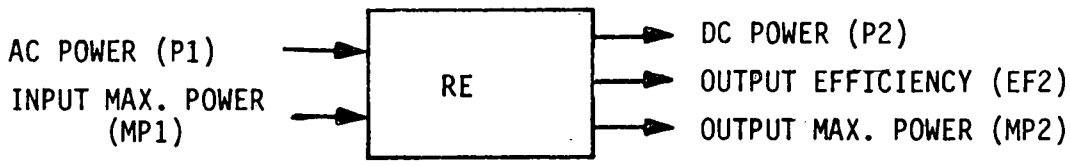

This component models a solid-state rectifier/transformer. Power losses due to resistive heating and contact potential loss are modeled. Default parameter values determining power losses are based on 200 kw rated power.

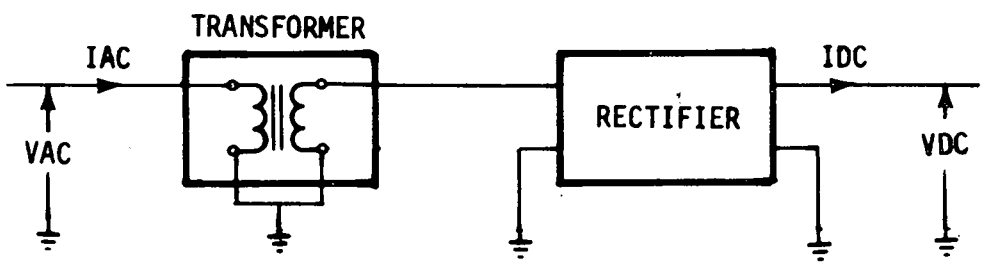

FIGURE 7.31: RECTIFIER FUNCTIONAL DIAGRAM

RE

Inputs

Parameter/Port		Description	Units
P	1	AC input power	kw
RT		Transformer resistance (D = 0)	ohms
XT		Transformer reactance (D = 0.03)	ohms
VAC		Rated AC voltage (D = 440)	volts
DR		Rectifier contact potential (D = 0)	volts
RR		Rectifier resistance (D = 0.02)	ohms
RAP		Rated input power	kw
EF	1	Input product efficiency	-
MP	1	Maximum input power (D = $1.\times10^{8}$)	kw
CC		Rectifier cost/year	$

Outputs

Variable/Port			
P	2	DC output power	kw
IAC		AC input current	amps
PL		Power loss	kw
EF	2	Output product efficiency	-
MP	2	Maximum output power	kw

D - Default values supplied.

RE

Calculation Sequence

1) Compute transformer power angles

$$Y = SIN(\theta) = \sqrt{3}*XT*P1*1000/VAC^2$$

$$ABS(Y) > 1 \Rightarrow DIAGNOSTIC$$

2) Input and output current

If $P1 \leq 0$ set $P2 = IAC = PL = 0.$, $EFF = 1$ and go to 4)

$$IAC = VAC \sqrt{2-2COS(\theta)} \;/\; (\sqrt{3}*XT)$$

$$'' = VAC \sqrt{2-2*\sqrt{1-Y^2}} \;/\; (\sqrt{3}*XT)$$

$$IDC = \pi*IAC \;/\; \sqrt{6}$$

3) Power loss and output power

$$PL = (\sqrt{3}*RT*IAC^2 + IDC*(DR+IDC*RR))/1000$$

$$P2 = P1 - PL$$

$$EFF = P2/P1$$

$$P2 \leq 0 \Rightarrow DIAGNOSTIC,\ EFF = 1$$

4) Efficiency and maximum power

$$EF2 = EF1*EFF$$

$$MP2 = MIN(MP1,RAP)*EFF$$

5) Compute Costs

```
SUBROUTINE RE        ENTRY POINT 000257

STORAGE USED  CODE(1) 000352; DATA(0) 000073; BLANK COMMON(2) 000000

 COMMON BLOCKS

 0003   CIMPL   000002
 0004   CTIME   000001
 0005   CSIMUL  000010
 0006   COST    000001

EXTERNAL REFERENCES (BLOCK, NAME)

 0007   NWDU$
 0010   NIO2$
 0011   SQRT
 0012   NEPR3$

STORAGE ASSIGNMENT  (BLOCK, TYPE, RELATIVE LOCATION, NAME)

 0001   000042 100L      0000   000007 108F      0001   000100 200L      0001   000117 300L      0000   000034 308F
 0001   000214 400L      0006 R 000000 CCI       0005   000000 DUM       0000 R 000006 EFF       0003 I 000001 ICNT
 0000 R 000000 IDC       0003 I 000300 IMPL      0000   000061 INJP$     0000 R 000001 PI        0000 R 000002 ROOT3
 0004 R 000000 TIME      0005 R 000007 TMAX      0000 R 000003 TMAXI     0000 R 000004 Y         0000 R 000005 YY
```

```
00100      1*     CRE                                                                    000000
00101      2*            SUBROUTINE RE(P2,IAC,PL,EF2,MP2,P1,RT,XT,VAC,DR,RR,RAP,EF1,MP1,CC)  000000
00101      3*     C                                                                      000000
00101      4*     C              PURPOSE        SOLID STATE RECTIFIER/TRANSFORMER MODEL  000000
00101      5*     C                                                                      000000
00101      6*     C              METHOD          COMPUTE OUTPUT DC POWER AS A FUNCTION  000000
00101      7*     C                              OF INPUT AC POWER                       000000
00101      8*     C                                                                      000000
00101      9*     C              WRITTEN BY Y.K.CHAN          VERSION 1, JUNE 1, 1977    000000
00101     10*     C                                                                      000000
00101     11*     C   CALL SEQUENCE                                                      000000
00101     12*     C         OUTPUTS                                                      000000
00101     13*     C              P2  -DC OUTPUT POWER, KW                                000000
00101     14*     C              IAC -AC INPUT CURRENT, AMPS                             000000
00101     15*     C              PL  -POWER LOSS, KW                                     000000
00101     16*     C              EF2 -OUTPUT PRODUCT EFFICIENCY                          000000
00101     17*     C              MP2 -MAXIMUM OUTPUT POWER, KW                           000000
00101     18*     C         INPUTS                                                       000000
00101     19*     C              P1  -AC INPUT POWER, KW                                 000000
00101     20*     C              RT  -TRANSFORMWR RESISTANCE, OHMS                       000000
00101     21*     C              XT  -TRANSFORMER REACTANCE, OHMS                        000000
00101     22*     C              VAC -RATED AC VOLTAGE, VOLTS                            000000
```

```
00101     23*     C              DR  -RECTIFIER CONTACT POTENTIAL, VOLTS                    000000
00101     24*     C              RR  -RECTIFIER RESISTANCE, OHMS                            000000
00101     25*     C              RAP -RATED INPUT POWER, KW                                 000000
00101     26*     C              EF1 -INPUT PRODUCT EFFICIENCY                              000000
00101     27*     C              MP1 -MAXIMUM INPUT POWER, KW                               000000
00101     28*     C              CC  -RECTIFIER COST/YEAR, $                                000000
00101     29*     C                                                                         000000
00103     30*          COMMON /CIMPL/IMPL,ICNT/CTIME/TIME/CSIMUL/DUM(7),TMAX/COST/CCI       000000
00104     31*          REAL IAC,MP2,MP1,IDC                                                 000000
00105     32*          DATA PI/3.14159/                                                     000000
00107     33*          DATA ROOT3/1.73205/                                                  000000
00107     34*     C                                                                         000000
00111     35*          IF(IMPL.GT.0) GO TO 100                                              000000
00113     36*          IF(MP1.EQ..99999)MP1=1.E8                                            000002
00115     37*          IF(RT.EQ..99999) RT=0.                                               000007
00117     38*          IF(XT.EQ..99999) XT=.03                                              000013
00121     39*          IF(VAC.EQ..99999) VAC=440.                                           000020
00123     40*          IF(DR.EQ..99999) DR=0.                                               000025
00125     41*          IF(RR.EQ..99999) RR=.02                                              000031
00127     42*          TMAX1=TMAX*.99999                                                    000036
00127     43*     C                                                                         000036
00127     44*     C              COMPUTE TRANSFORMER POWER ANGLES                           000036
00127     45*     C                                                                         000036
00130     46*      100 Y=ROOT3*XT*P1*1000./(VAC*VAC)                                         000042
00131     47*          YY=Y*Y                                                               000051
00132     48*          IF(YY.LE.1.)GO TO 200                                                000053
00134     49*          IF(IMPL.EQ.2)WRITE(6,108)P1,XT,VAC                                   000056
00142     50*      108 FORMAT(1H0,19HRE, AC INPUT POWER ,F12.3,49H TOO LARGE IN RELATION    000071
00142     51*         1TO TRANSFORMER REACTANCE ,F12.3,22H AND RATED AC VOLTAGE  ,F12.3)    000071
00143     52*          IF(IMPL.EQ.2)ICNT=ICNT+1                                             000071
00145     53*      200 YY=AMIN1(1.,YY)                                                      000100
00145     54*     C                                                                         000100
00145     55*     C              INPUT AND OUTPUT CURRENT                                   000100
00145     56*     C                                                                         000100
00146     57*          IF(P1.GT.0.)GO TO 300                                                000105
00150     58*          P2=0.                                                                000110
00151     59*          IAC=0.                                                               000111
00152     60*          PL=0.                                                                000112
00153     61*          EFF=1.                                                               000113
00154     62*          GO TO 400                                                            000115
00154     63*     C                                                                         000115
00155     64*      300 IAC=VAC*SQRT(2.-2.*SQRT(1.-YY))/(ROOT3*XT)                           000117
00156     65*          IDC=PI*IAC/SQRT(6.)                                                  000140
00156     66*     C                                                                         000140
00156     67*     C              POWER LOSS AND OUTPUT POWER                                000140
00156     68*     C                                                                         000140
00157     69*          PL=(ROOT3*RT*IAC*IAC+IDC*(DR+IDC*RR))/1000.                          000147
00160     70*          P2=P1-PL                                                             000161
00161     71*          EFF=P2/P1                                                            000163
00162     72*          IF(P2.GT.0.) GO TO 400                                               000165
00164     73*          IF(IMPL.EQ.2)WRITE(6,308)PL,P1                                       000170
00171     74*      308 FORMAT(1H0,14HRE POWER LOSS ,F12.3,21H EXCEEDS INPUT POWER ,F12.3)   000202
00172     75*          IF(IMPL.EQ.2)ICNT=ICNT+1                                             000202
00174     76*          P2=0.                                                                000210
00175     77*          EFF=1.                                                               000211
00175     78*     C                                                                         000211
00175     79*     C              EFFICIENCY AND MAXIMUM POWER                               000211
```

```
00175      80*      C                                                          000211
00176      81*        400 EF2=EF1*EFF                                          000214
00177      82*            MP2=AMIN1(MP1,RAP)                                   000216
00200      83*            MP2=MP2*EFF                                          000224
00201      84*            IF(IMPL.LE.1)RETURN                                  000226
00203      85*            IF(TIME.LT.TMAX1)RETURN                              000235
00205      86*            CCI=CCI+CC                                           000244
00205      87*      C                                                          000244
00206      88*            RETURN                                               000247
00207      89*            END                                                  000351
```

7.32 RANDOM NUMBERS

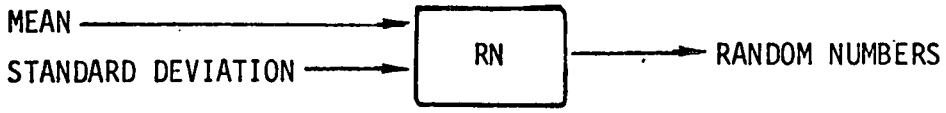

This component generates an uncorrelated sequence of normally distributed random numbers with a specified mean and standard deviation.

Inputs

Parameter/Port	Description
MN	Mean value of sequence
SIG	Standard deviation of sequence
NST[1]	Start parameter. (Use any odd integer greater than 1). Default supplied.

Outputs

Variable/Port	
FØ	Random number output

[1] If RESET parameter > 0 then succeeding simulations use NST to start random sequence.

```
SUBROUTINE RN        ENTRY POINT 000065

STORAGE USED  CODE(1) 000105; DATA(0) 000033; BLANK COMMON(2) 000000

 COMMON BLOCKS

 0003   CIMPL   000003

EXTERNAL REFERENCES (BLOCK, NAME)

 0004   NEPR3S

STORAGE ASSIGNMENT  (BLOCK, TYPE, RELATIVE LOCATION, NAME)

 0001   000026 123G      0001   000021 5L        0000 R 000006 AX0       0000 I 000007 I         0003   000001 ICNT
 0003 I 000000 IMPL      0000   000024 INJPS     0003 I 000002 ITEST     0000 D 000004 SUM       0000 D 000000 X
 0000 D 000002 Y
```

```
00100      1*      CRN                                                                          000000
00101      2*              SUBROUTINE RN(U,AX,SIG,AMN)                                          000000
00101      3*      C     VERSION 2.                 REVISED  MAY 1977                           000000
00101      4*      C     PURPOSE -  GENERATES A NORMALLY DISTRIBUTED RANDOM NUMBER               000000
00101      5*      C     CALL SEQUENCE                                                           000000
00101      6*      C                    U - RANDOM NUMBER OUTPUT                                 000000
00101      7*      C                    AX- A START PARAMETER WHICH CONTROLS THE BEGINNING POINT 000000
00101      8*      C                        OF THE OUTPUT SEQUENCE.  AX SHOULD BE ANY ODD INTEGER 000000
00101      9*      C                        GREATER THAN ONE.  THE DEFAULT VALUE OF AX IS 431469. 000000
00101     10*      C                        AX IS UPDATED FOR NEW CALLS TO THE SUBROUTINE.        000000
00101     11*      C                   SIG- THE DESIRED STANDARD DEVIATION OF THE SEQUENCE        000000
00101     12*      C                   AMN- THE DESIRED MEAN OF THE SEQUENCE                      000000
00101     13*      C                                                                               000000
00101     14*      C     DESIGNED BY        ROGER W. CALL            SEPT 1976                   000000
00103     15*             COMMON /CIMPL/IMPL,ICNT,ITEST                                          000000
00104     16*             DOUBLE PRECISION X,Y,SUM                                               000000
00105     17*             DATA Y /253967.D0/ AX0/0./                                             000000
00110     18*             IF(IMPL.GT.0)GO TO 5                                                   000000
00112     19*             IF(AX.EQ..99999) AX=431469.                                            000002
00114     20*             IF(AX0.EQ.0.) AX0= AX                                                  000007
00116     21*             IF(ITEST.EQ.1) AX= AX0                                                 000013
00120     22*           5 X =AX                                                                  000021
00121     23*             SUM=0.D0                                                               000022
00122     24*             DO 1 I=1,12                                                            000026
00125     25*             X= DMOD(X*Y,16777216.D0)                                               000026
00126     26*           1 SUM= SUM+ X/16777215.D0                                                000036
00130     27*             AX= X                                                                  000043
00131     28*             U=(SUM-6.0)*SIG+AMN                                                    000045
00132     29*             RETURN                                                                 000054
00133     30*             END                                                                    000104
```

RN

7.33 SATURATION FUNCTION

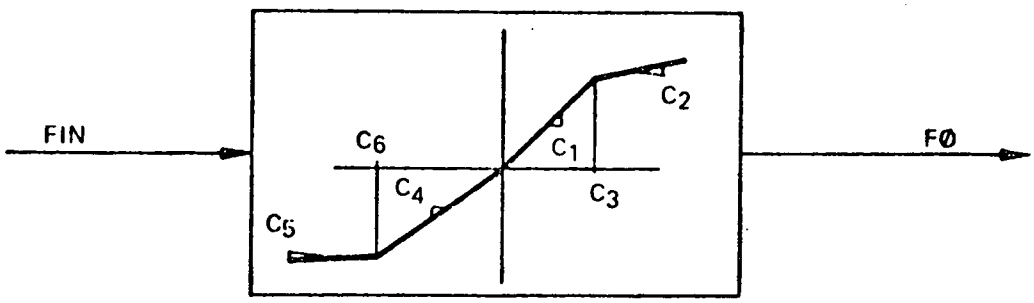

Inputs

Parameter/Port	Description
FIN	Input quantity
C1	Slope 0 < FIN < C3
C2	Slope FIN > C3
C3	Positive saturation intercept
C4	Slope 0 > FIN > C6
C5	Slope FIN < C6
C6	Negative saturation intercept

Outputs

Variable/Port	
FØ	Output quantity

Calculation Sequence

FØ = C1*C3 + C2*(FIN-C3) if FIN > C3

FØ = C1*FIN if 0 < FIN < C3

FØ ≠ C4*FIN if 0 > FIN > C6

FØ = C4*C6 + C5*(FIN-C6) if FIN < C6

```
SUBROUTINE SA        ENTRY POINT 000051

STORAGE USED  CODE(1) 000076; DATA(0) 000013; BLANK COMMON(2) 000000

EXTERNAL REFERENCES (BLOCK, NAME)
 0003   NERR3$

STORAGE ASSIGNMENT  (BLOCK, TYPE, RELATIVE LOCATION, NAME)
 0001   000017 10L      0001   000042 100L      0001   000027 20L      0001   000037 30L      0000   000000 INJPS


00100      1*     CSA                                                                                  000000
00101      2*          SUBROUTINE SA(FO,FIN,C1,C2,C3,C4,C5,C6)                                         000000
00101      3*     C                                                                                    000000
00101      4*     C   PURPOSE - TO SIMULATE SATURATION                                                 000000
00101      5*     C                                                                                    000000
00101      6*     C                                                                                    000000
00101      7*     C   METHOD - SEE CODING. C3 AND C6 ARE VALUES OF THE INPUT AT WHICH                  000000
00101      8*     C            SATURATION OCCURS.  C3 IS GREATER THAN C6. THE ROUTINE                  000000
00101      9*     C            CAN SIMULATE A CHANGE OF SLOPE AT THE ORIGIN (C1.NE.C4)                 000000
00101     10*     C            PROVIDED C6 IS LESS THAN ZERO. SIMILARLY THE SLOPES                     000000
00101     11*     C            IN THE SATURATION REGION (C2 AND C5)CAN DIFFER.                         000000
00101     12*     C            THE SLOPES CAN BE POSITIVE OR NEGATIVE                                  000000
00101     13*     C                                                                                    000000
00101     14*     C                                                                                    000000
00101     15*     C   WRITTEN BY  -  ADAM LLOYD                 LATEST REVISION - NOV 75               000000
00101     16*     C                                                                                    000000
00101     17*     C   LIMITATIONS - USE OF ZERO SLOPES (C2=0 OR C5=0) IN THE SATURATION                000000
00101     18*     C                 REGION SHOULD BE AVOIDED. IT IS DESIRABLE THAT THE                 000000
00101     19*     C                 SLOPE RATIOS C1/C2 AND C4/C5 SHOULD NOT EXCEED 100.               000000
00101     20*     C                 EXCESSIVE SLOPE RATIOS MAY RESULT IN VERY SLOW                     000000
00101     21*     C                 CONVERGENCE                                                        000000
00101     22*     C                                                                                    000000
00101     23*     C                                                                                    000000
00101     24*     C   INPUT/OUTPUT LIST                                                                000000
00101     25*     C                                                                                    000000
00101     26*     C   FO          OUTPUT VARIABLE                 ANY          OUTPUT  VAR             000000
00101     27*     C   FIN         INPUT  VARIABLE                 ANY          INPUT   VAR             000000
00101     28*     C   C1          SLOPE                ) FIRST    ANY          INPUT   PARAM           000000
00101     29*     C   C2          SATURATION SLOPE     ) SLOPE    ANY          INPUT   PARAM           000000
00101     30*     C   C3          SATURATION INTERCEPT)           ANY          INPUT   PARAM           000000
00101     31*     C   C4          SLOPE                ) SECOND   ANY          INPUT   PARAM           000000
00101     32*     C   C5          SATURATION SLOPE     ) SLOPE    ANY          INPUT   PARAM           000000
00101     33*     C   C6          SATURATION INTERCEPT)           ANY          INPUT   PARAM           000000
00101     34*     C                                                                                    000000
00101     35*          IF(FIN.GT.C3)GO TO 10                                                           000000
```


S1

```
00105      36*          IF(FIN.LT.C6)GO TO 20                          000003
00107      37*          IF(FIN.LT.0.)GO TO 30                          000007
00111      38*          FO=C1*FIN                                      000012
00112      39*          GO TO 100                                      000015
00112      40*     C   POSITIVE SATURATION                             000015
00113      41*      10  FO=C1+C3+C2*(FIN-C3)                           000017
00114      42*          GO TO 100                                      000025
00114      43*     C   NEGATIVE SATURATION                             000025
00115      44*      20  FO=C4+C6+C5*(FIN-C6)                           000027
00116      45*          GO TO 100                                      000035
00116      46*     C   NEGATIVE UNSATURATED                            000035
00117      47*      30  FO=C4*FIN                                      000037
00120      48*      100 RETURN                                         000042
00121      49*          END                                            000075
```

7.34 SINGLE POLE SWITCH

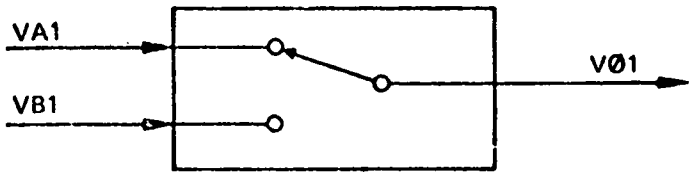

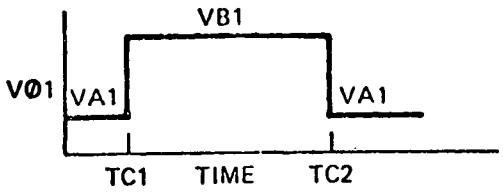

SW1=1

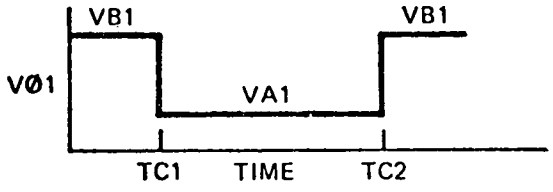

SW1=0

THE SWITCHING OPERATION MAY BE CONTROLLED BY EITHER TIME OR THE INPUT PARAMETER SW1. THE TIME DEPENDENCE MAY BE ELIMINATED BY SETTING TC1 = 10^{36}

Inputs

Parameter/Port	Description
VA1	Input to switch
VB1	Input to switch
SW1	Switch control parameter
TC1	Time for first switching (hours)
TC2	Time for second switching (hours)

Outputs

Variable/Port	
VØ1	Switch output

Calculation Sequence

If SW1 = 0 then

$$VØ1 = \begin{pmatrix} VA1 & TC1 < TIME < TC2 \\ VB1 & \text{otherwise} \end{pmatrix}$$

If SW1 = 1 then

$$VØ1 = \begin{pmatrix} VB1 & TC1 < TIME < TC2 \\ VA1 & \text{otherwise} \end{pmatrix}$$

```
SUBROUTINE SW          ENTRY POINT 000C42

STORAGE USED  CODE(1) 000047; DATA(0) 000007; BLANK COMMON(2) 000CC0

 COMMON BLOCKS

 0003   CTIME   000001
 0004   CIO     000003

EXTERNAL REFERENCES (BLOCK, NAME)

 0005   NERR3$

STORAGE ASSIGNMENT  (BLOCK, TYPE, RELATIVE LOCATION, NAME)

 0004   C00002 IDIAG     0000   000003 INJPS     0004   C00000 IREAD     0004   000001 IWRITE    0C00 R 000000 SX
 0003 R 000000 TIME
```

```
00100      1*      CSW                                                                                    000000
00101      2*              SUBROUTINE SW(VO1,VA1,VB1,SW1,TC1,TC2)                                         000000
00101      3*      C                                                                                      000000
00101      4*      C   PURPOSE - TO PROVIDE SWITCH CONTROL FOR ONE VARIABLE                               000000
00101      5*      C                                                                                      000000
00101      6*      C                                                                                      000000
00101      7*      C   METHOD  - SEE CODING                                                               000000
00101      8*      C                                                                                      000000
00101      9*      C                                                                                      000000
00101     10*      C   WRITTEN BY  - ADAM LLOYD            LATEST REVISION     NOV 75                     000000
00101     11*      C                                                                                      000000
00101     12*      C                                                                                      000000
00101     13*      C   LIMITATIONS - NOT MORE THAN TWO SWITCHINGS AT TIMES TC1 AND TC2                    000000
00101     14*      C                                                                                      000000
00101     15*      C                                                                                      000000
00101     16*      C   INPUT/OUTPUT LIST                                                                  000000
00101     17*      C                                                                                      000000
00101     18*      C   VO1         OUTPUT VARIABLE NO 1                ANY       OUTPUT VAR               000000
00101     19*      C   VA1         INPUT VARIABLE NO A1                ANY       INPUT  VAR               000000
00101     20*      C   VB1         INPUT VARIABLE NO B1                ANY       INPUT  VAR               000000
00101     21*      C   SW1         SWITCH CONTROL INITIAL VALUE        ---       INPUT  PARAM             000000
00101     22*      C                   =1.    VO=VB                                                       000000
00101     23*      C                   =0.    VO=VA                                                       000000
00101     24*      C   TC1         TIME FOR FIRST SWITCH               SECS      INPUT  PARAM             000000
00101     25*      C   TC2         TIME FOR SECOND SWITCH              SECS      INPUT  PARAM             000000
00101     26*      C                   (TC2.GT.TC1)                                                       000000
00103     27*              COMMON/CTIME/TIME                                                              000000
00104     28*              COMMON/CIO/IREAD,IWRITE,IDIAG                                                  000000
00105     29*              SX=SW1                                                                         000000
```


SW

```
00106     30*          IF(TIME.GT.TC1.AND.TIME.LT.TC2)SX=ABS(SW1-1.)          000001
00110     31*          VO1=VA1                                                000023
00111     32*          IF(SX.GT.0.5)VO1=VB1                                   000025
00113     33*          RETURN                                                 000033
00114     34*          END                                                    000046
```

7.35 TWO POLE SWITCH

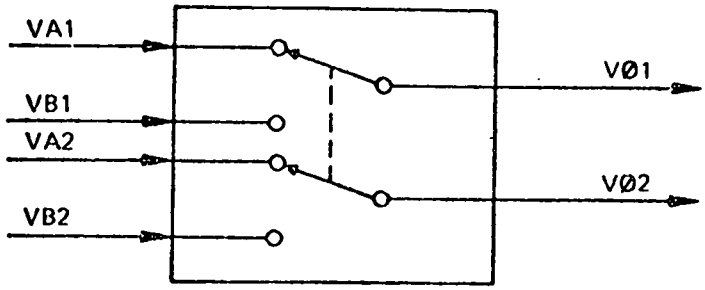

SEE SW FOR SWITCH CONTROL LOGIC

Inputs

Parameter/Port	Description
VA1	Input to switch 1
VA2	Input to switch 2
VB1	Input to switch 1
VB2	Input to switch 2
SW1	Switch control parameter
TC1	Time for first switching (hours)
TC2	Time for second switching (hours)

Outputs

Variable/Port	
VØ1	Output from switch 1
VØ2	Output from switch 2

```
SUBROUTINE SX        ENTRY POINT 000052

STORAGE USED  CODE(1) 000062; DATA(0) 000007; BLANK COMMON(2) 000000

 COMMON BLOCKS

 0003   CTIME   000001
 0004   CIO     000003

EXTERNAL REFERENCES (BLOCK, NAME)

 0005   NERR3$

STORAGE ASSIGNMENT  (BLOCK, TYPE, RELATIVE LOCATION, NAME)

 0004   000002 IDIAG     0000   000003 INJPS     0004   000000 IREAD     0004   000001 IWRITE    0000 R 000000 SW
 0003 R 000000 TIME
```

```
00100      1*      CSX                                                                                    000000
00101      2*            SUBROUTINE SX(VO1,VO2,VA1,VA2,VB1,VB2,SW1,TC1,TC2)                               000000
00101      3*      C                                                                                      000000
00101      4*      C   PURPOSE - TO PROVIDE A SWITCH COMPONENT FOR TWO VARIABLES                          000000
00101      5*      C                                                                                      000000
00101      6*      C                                                                                      000000
00101      7*      C   METHOD  - SEE CODING                                                               000000
00101      8*      C                                                                                      000000
00101      9*      C                                                                                      000000
00101     10*      C   WRITTEN BY  - ADAM LLOYD            LATEST REVISION     NOV 75                     000000
00101     11*      C                                                                                      000000
00101     12*      C                                                                                      000000
00101     13*      C   LIMITATIONS - NOT MORE THAN TWO SWITCHINGS AT TIMES TC1 AND TC2                    000000
00101     14*      C                                                                                      000000
00101     15*      C                                                                                      000000
00101     16*      C   INPUT/OUTPUT LIST                                                                  000000
00101     17*      C                                                                                      000000
00101     18*      C   VO1        OUTPUT VARIABLE NO 1                ANY       OUTPUT VAR                000000
00101     19*      C   VO2        OUTPUT VARIABLE NO 2                ANY       OUTPUT VAR                000000
00101     20*      C   VA1        INPUT VARIABLE NO A1                ANY       INPUT  VAR                000000
00101     21*      C   VA2        INPUT VARIABLE NO A2                ANY       INPUT  VAR                000000
00101     22*      C   VB1        INPUT VARIABLE NO B1                ANY       INPUT  VAR                000000
00101     23*      C   VB2        INPUT VARIABLE NO B2                ANY       INPUT  VAR                000000
00101     24*      C   SW1        SWITCH CONTROL INITIAL VALUE        ---       INPUT  PARAM              000000
00101     25*      C                   =1.   VO=VB                                                       000000
00101     26*      C                   =0.   VO=VA                                                       000000
0         27*      C   TC1        TIME FOR FIRST SWITCH               SECS      INPUT  PARAM              000000
0         28*      C   TC2        TIME FOR SECOND SWITCH              SECS      INPUT  PARAM              000000
0         29*      C                   (TC2.GT.TC1)                                                      000000
```

```
00103     30*        COMMON/CTIME/TIME                                          00000
00104     31*        COMMON/CIO/IREAD,IWRITE,IDIAS                              00000
00105     32*        SW=SW1                                                     00000
00106     33*        IF(TIME.GT.TC1.AND.TIME.LT.TC2)SW=ABS(SW1-1.)              00001
00110     34*        V01=VA1                                                    00023
00111     35*        V02=VA2                                                    00025
00112     36*        IF(SW.GT.0.5)V01=VB1                                       00027
00114     37*        IF(SW.GT.0.5)V02=VB2                                       00035
00116     38*        RETURN                                                     00043
00117     39*        END                                                        00061
```

7.36 THREE POLE SWITCH

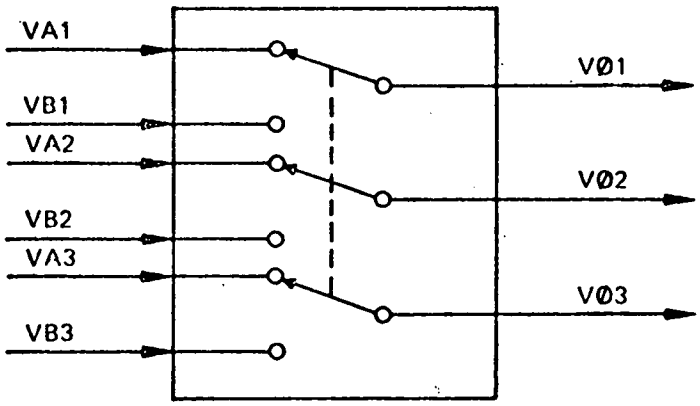

SEE SW FOR SWITCH CONTROL LOGIC

Inputs

Parameter/Port	Description
VA1	Input to switch 1
VA2	Input to switch 2
VA3	Input to switch 3
VB1	Input to switch 1
VB2	Input to switch 2
VB3	Input to switch 3
SW1	Switch control parameter
TC1	Time for first switching (hours)
TC2	Time for second switching (hours)

Outputs

Variable/Port	
VØ1	Output from switch 1
VØ2	Output from switch 2
VØ3	Output from switch 3

```
SUBROUTINE SY        ENTRY POINT 000063

STORAGE USED  CODE(1) 000077; DATA(0) 000011; BLANK COMMON(2) 000000

 COMMON BLOCKS

 0003   CTIME   000001
 0004   CIO     000003

EXTERNAL REFERENCES (BLOCK, NAME)

 0005   NERR3$

STORAGE ASSIGNMENT  (BLOCK, TYPE, RELATIVE LOCATION, NAME)

 0004   000002 IDIAG     0000   000003 INJP$     0004   000000 IREAD     0004   000001 IWRITE    0000 R 000000 SW
 0003 R 000000 TIME


00100      1*      CSY                                                                                    000000
00101      2*            SUBROUTINE SY(VO1,VO2,VO3,VA1,VA2,VA3,VB1,VB2,VB3,SW1,TC1,TC2)                   000000
00101      3*      C                                                                                      000000
00101      4*      C   PURPOSE - TO PROVIDE A SWITCH COMPONENT FOR THREE VARIABLES                        000000
00101      5*      C                                                                                      000000
00101      6*      C                                                                                      000000
00101      7*      C   METHOD  - SEE CODING                                                               000000
00101      8*      C                                                                                      000000
00101      9*      C                                                                                      000000
00101     10*      C   WRITTEN BY  - ADAM LLOYD            LATEST REVISION     NOV 75                     000000
00101     11*      C                                                                                      000000
00101     12*      C                                                                                      000000
00101     13*      C   LIMITATIONS - NOT MORE THAN TWO SWITCHINGS AT TIMES TC1 AND TC2                    000000
00101     14*      C                                                                                      000000
00101     15*      C                                                                                      000000
00101     16*      C   INPUT/OUTPUT LIST                                                                  000000
00101     17*      C                                                                                      000000
00101     18*      C   VO1        OUTPUT VARIABLE NO 1                ANY        OUTPUT VAR              000000
00101     19*      C   VO2        OUTPUT VARIABLE NO 2                ANY        OUTPUT VAR              000000
00101     20*      C   VO3        OUTPUT VARIABLE NO 3                ANY        OUTPUT VAR              000000
00101     21*      C   VA1        INPUT VARIABLE NO A1                ANY        INPUT  VAR              000000
00101     22*      C   VA2        INPUT VARIABLE NO A2                ANY        INPUT  VAR              000000
00101     23*      C   VA3        INPUT VARIABLE NO A3                ANY        INPUT  VAR              000000
00101     24*      C   VB1        INPUT VARIABLE NO B1                ANY        INPUT  VAR              000000
00101     25*      C   VB2        INPUT VARIABLE NO B2                ANY        INPUT  VAR              000000
00101     26*      C   VB3        INPUT VARIABLE NO B3                ANY        INPUT  VAR              000000
00101     27*      C   SW1        SWITCH CONTROL INITIAL VALUE        ---        INPUT  PARAM            000000
00101     28*      C                  =1.    VO=VB                                                       000000
00101     29*      C                  =0.    VO=VA                                                       000000
```

SY

```
00101     30*     C   TC1        TIME FOR FIRST SWITCH                SECS      INPUT  PARAM          000000
00101     31*     C   TC2        TIME FOR SECOND SWITCH               SECS      INPUT  PARAM          000000
00101     32*     C                   (TC2.GT.TC1)                                                    000000
00103     33*           COMMON/CTIME/TIME                                                             000000
00104     34*           COMMON/CIO/IREAD,IWRITE,IDIAG                                                 000000
00105     35*           SW=SW1                                                                        000000
00106     36*           VO1=VA1                                                                       000001
00107     37*           VO2=VA2                                                                       000003
00110     38*           VO3=VA3                                                                       000005
00111     39*           IF(TIME.GT.TC1.AND.TIME.LT.TC2)SW=ABS(SW1-1.)                                 000007
00113     40*           IF(SW.GT.0.5)VO1=VB1                                                          000031
00115     41*           IF(SW.GT.0.5)VO2=VB2                                                          000037
00117     42*           IF(SW.GT.0.5)VO3=VB3                                                          000045
00121     43*           RETURN                                                                        000053
00122     44*           END                                                                           000076
```

7.37 FOUR POLE SWITCH

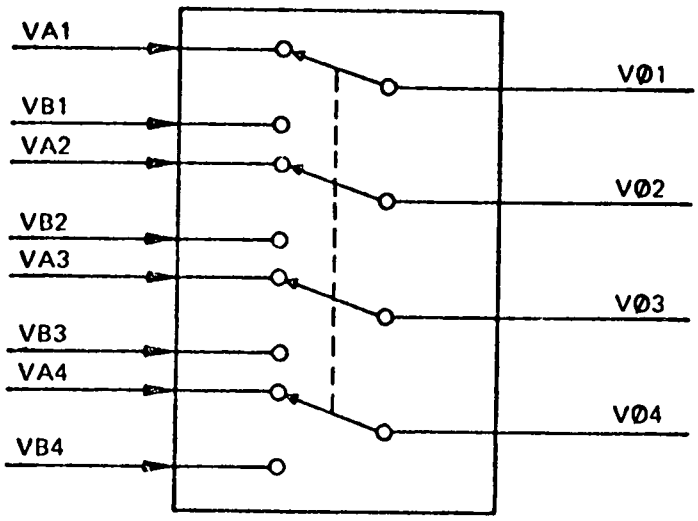

SEE SW FOR SWITCH CONTROL LOGIC

Inputs

Parameter/Port	Description
VA1	Input to switch 1
VA2	Input to switch 2
VA3	Input to switch 3
VA4	Input to switch 4
VB1	Input to switch 1
VB2	Input to switch 2
VB3	Input to switch 3
VB4	Input to switch 4
SW1	Switch control parameter
TC1	Time for first switching (hours)
TC2	Time for second switching (hours)

Outputs

Variable/Port	
VØ1	Output from switch 1
VØ2	Output from switch 2
VØ3	Output from switch 3
VØ4	Output from switch 4

```
SUPROUTINE SZ        ENTRY POINT 000073

STORAGE USED  CODE(1) 000112; DATA(0) 000011; BLANK COMMON(2) 000000

 COMMON BLOCKS

 0003   CTIME   000001
 0004   CIO     000003

EXTERNAL REFERENCES (BLOCK, NAME)

 0005   NERR3$

STORAGE ASSIGNMENT  (BLOCK, TYPE, RELATIVE LOCATION, NAME)

 0004   000002 INIAG      0000   000003 INJP$     0004   000000 IREAD     0004   000001 IWRITE    0000 R 000000 SW
 0003 R 000000 TIME
```

```
00100      1*     CSZ
00101      2*          SUBROUTINE SZ(V01,V02,V03,V04,VA1,VA2,VA3,VA4,VB1,VB2,VB3,VB4,
00101      3*         1 SW1,TC1,TC2)
00101      4*     C
00101      5*     C   PURPOSE - TO PROVIDE A SWITCH COMPONENT FOR FOUR VARIABLES
00101      6*     C
00101      7*     C
00101      8*     C   METHOD  - SEE CODING
00101      9*     C
00101     10*     C
00101     11*     C   WRITTEN BY  - ADAM LLOYD            LATEST REVISION     NOV 75
00101     12*     C
00101     13*     C
00101     14*     C   LIMITATIONS - NOT MORE THAN TWO SWITCHINGS AT TIMES TC1 AND TC2
00101     15*     C
00101     16*     C
00101     17*     C   INPUT/OUTPUT LIST
00101     18*     C
00101     19*     C   V01        OUTPUT VARIABLE NO 1              ANY       OUTPUT VAR
00101     20*     C   V02        OUTPUT VARIABLE NO 2              ANY       OUTPUT VAR
00101     21*     C   V03        OUTPUT VARIABLE NO 3              ANY       OUTPUT VAR
00101     22*     C   V04        OUTPUT VARIABLE NO 4              ANY       OUTPUT VAR
00101     23*     C   VA1        INPUT VARIABLE NO A1              ANY       INPUT  VAR
00101     24*     C   VA2        INPUT VARIABLE NO A2              ANY       INPUT  VAR
00101     25*     C   VA3        INPUT VARIABLE NO A3              ANY       INPUT  VAR
00101     26*     C   VA4        INPUT VARIABLE NO A4              ANY       INPUT  VAR
00101     27*     C   VB1        INPUT VARIABLE NO B1              ANY       INPUT  VAR
00101     28*     C   VB2        INPUT VARIABLE NO B2              ANY       INPUT  VAR
00101     29*     C   VB3        INPUT VARIABLE NO B3              ANY       INPUT  VAR
```

```
00101     30*     C   VB4        INPUT VARIABLE NO B4                ANY       INPUT  VAR      000000
00101     31*     C   SW1        SWITCH CONTROL INITIAL VALUE        ---       INPUT  PARAM    000000
00101     32*     C                   =1.   VO=VB                                             000000
00101     33*     C                   =0.   VO=VA                                             000000
00101     34*     C   TC1        TIME FOR FIRST SWITCH               SECS      INPUT  PARAM    000000
00101     35*     C   TC2        TIME FOR SECOND SWITCH              SECS      INPUT  PARAM    000000
00101     36*     C                   (TC2.GT.TC1)                                            000000
00103     37*           COMMON/CTIME/TIME                                                     000000
00104     38*           COMMON/CIO/IREAD,IWRITE,IDIAG                                         000000
00105     39*           SW=SW1                                                                000000
00106     40*           IF(TIME.GT.TC1.AND.TIME.LT.TC2)SW=ABS(SW1-1.)                         000001
00110     41*           VO1=VA1                                                               000023
00111     42*           VO2=VA2                                                               000025
00112     43*           VO3=VA3                                                               000027
00113     44*           VO4=VA4                                                               000031
00114     45*           IF(SW.GT.0.5)VO1=VB1                                                  000033
00116     46*           IF(SW.GT.0.5)VO2=VB2                                                  000041
00120     47*           IF(SW.GT.0.5)VO3=VB3                                                  000047
00122     48*           IF(SW.GT.0.5)VO4=VB4                                                  000055
00124     49*           RETURN                                                                000063
00125     50*           END                                                                   000111
```

7.38 TAPE/FILE READ

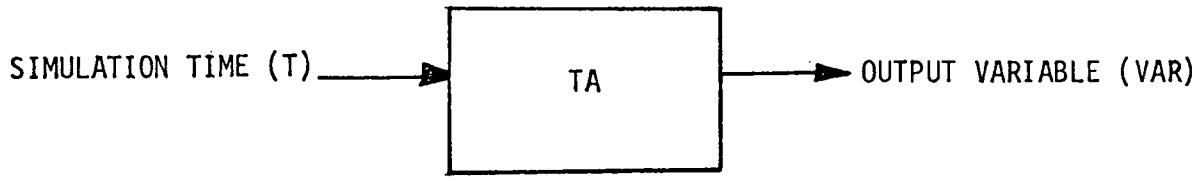

This component reads a data file containing a single output variable time history. The file structure is specified below, and assumes equal increment data. Linear interpolation is used to obtain the output value. No more than eight TA components are allowed per model. The component TI is used to supply the time input T. The data files must be catalogued using the names F1, F2, or the JCL procedure file XQTANALYSIS modified appropriately. If tape data is used, it must be read into permanent storage files in a prior job step.

Inputs

Parameter/Port	Description	Units
NST	Number of records to skip at start[1]	
T	Simulation time referenced to start of year	hr
ITF	Indicator function:	
	0 = no read	
	J = read data into Jth array ($J \leq 8$)	

[1] NST = (start time of simulation-start time of file)/(data increment x 446)

Outputs

Variable/Port	Description	Units
VAR	Output variable at time T	
N	Length of file record	
TØ	Time of first data value in current record	hr
H	Time increment between data values	hr

Record Structure

1st record = identification header, 28 words

Nth record (N > 1): 448 words

first word = time of first data value in hours (TØ)

second word = time increment between data values (H)

J+2 word = data value at time = TØ + (J-1)H

(J=1,...,446)

If the useful data ends in the middle of a record, then an end value = .99999 is used to signal end of information.

Calculation Sequence

If ITF = 0 RETURN

1) Initialization. (First Pass Only)

- o Read 1st record and write out identification header data and unit number. (Error exit to 6))
- o Read past NST data records. Go to 4)

Calculation Sequence Cont.

2) File location incorrect; use initial value

o If T ≥ TØ GO TO 3)

```
Write diagnostic
VAR = A(1,J)     (J=ITF)
Return
```

3) Table Interpolation for Output

o If T ≥ TØ + N * H GO TO 4)

```
XT(1) = TØ
XT(2) = TØ+H
VAR = TBLU1(T,XT,A(1,J),0,N)
Return
```

4) Read Next Data Record

If end has been encountered previously go to 5)
Read next record into array A(•,J). If end encountered, set N = last value. (Error exit to 6))

```
TØ = A(1,J)
H  = A(2,J)
GO TO 3)
```

5) End of File. Use last value.

```
VAR = A(N,J)
Write Diagnostic
Return
```

6) Read Error Encountered

```
Write Diagnostic and STOP
```

```
SUBROUTINE TA          ENTRY POINT 000343

STORAGE USED  CODE(1) 000403; DATA(0) 007132; BLANK COMMON(2) 000000

 COMMON BLOCKS

 0003   CIMPL  000002
 0004   DATARD 000700

EXTERNAL REFERENCES (BLOCK, NAME)

 0005   NTRAN
 0006   TBLU1
 0007   NWDU$
 0010   NIO3$
 0011   NIO2$
 0012   NSTOP$
 0013   NERR3$

STORAGE ASSIGNMENT  (BLOCK, TYPE, RELATIVE LOCATION, NAME)

 0001   000321 10L       0001   000102 100L      0001   000231 167G      0000   007035 20F       0001   000135 200L
 0000   007046 30F       0001   000176 300L      0001   000262 400L      0001   000244 60L       0000   007062 80F
 0000   007076 90F       0000 R 000000 A         0000 R 006760 B         0000 I 007034 I         0003 I 000001 ICNT
 0003 I 000000 IMPL      0000 I 007014 IND       0000   007121 INJP$     0000 I 007030 IUN       0000 I 007027 J
 0000 I 007031 L1        0000 I 007033 N         0000 I 007032 NO        0006 R 000000 TBLU1     0004 R 000000 TEMP
 0000 R 007026 X         0000 R 007024 XT
```

```
00100      1*     CTAPE                                                          000000
00101      2*            SUBROUTINE TA(VAR,NOUT,TO,H,NST,T,ITF)                  000000
00101      3*     C                                                              000000
00101      4*     C     PURPOSE     READ TIME HISTORY DATA ON STORAGE DEVICE     000000
00101      5*     C                                                              000000
00101      6*     C                                                              000000
00101      7*     C     METHOD      USE NTRAN SEQENTIAL BLOCK READ FROM MASS STORAGE 000000
00101      8*     C                 INTO CORE.  LINEAR INTERPOLATION IS USED TO OBTAIN 000000
00101      9*     C                 VALUE AT SPECIFIED TIME T.                   000000
00101     10*     C                                                              000000
00101     11*     C    WRITTEN BY A.W. WARREN                 JUNE 1977           000000
00101     12*     C                                                              000000
00101     13*     C    CALL SEQUENCE                                             000000
00101     14*     C          OUTPUTS                                             000000
00101     15*     C               VAR   - OUTPUT VARIABLE AT TIME T              000000
00101     16*     C               NOUT  - LENGTH OF DATA BLOCK LAST READ         000000
00101     17*     C               TO    - TIME OF FIRST DATA VALUE IN CORE, HR   000000
00101     18*     C               H     - TIME INCREMENT BETWEEN DATA VALUES, HR 000000
00101     19*     C          INPUTS                                              000000
```

TA

```
00101      20*     C                 NST  - NUMBER OF BLOCKS TO SKIP AT START                    000000
00101      21*     C                 T    - SIMULATION TIME REFERENCED TO START OF YEAR, HR      000000
00101      22*     C                 ITF  - INDICATOR FOR LOGICAL UNIT TO READ                   000000
00101      23*     C                        = 0   NO READ                                        000000
00101      24*     C                        = 1,...8 FOR LOGICAL UNITS 11,...18, RESP.           000000
00101      25*     C                                                                             000000
00103      26*           DIMENSION A(446,8),B(28),IND(8),XT(2)                                   000000
00104      27*           COMMON /CIMPL/ IMPL,ICNT /DATARD/ TEMP(448)                             000000
00105      28*           REAL NST,NOUT,ITF                                                       000000
00106      29*           DATA X/.99999/                                                          000000
00106      30*     C                                                                             000000
00106      31*     C                        INITIALIZE AND POSITION THE FILE                     000000
00106      32*     C                                                                             000000
00110      33*           VAR=X                                                                   000000
00111      34*           J=ITF+.001                                                              000001
00112      35*           IF(J.EQ.0) RETURN                                                       000012
00114      36*           IUN= J+10                                                               000017
00115      37*           IF(IMPL.GT.0) GO TO 100                                                 000022
00115      38*     C                                                                             000022
00117      39*           CALL NTRAN(IUN,10)                                                      000026
00120      40*           CALL NTRAN(IUN,2,28,B,L1,22)                                            000032
00121      41*           IF(L1.LT.0)GO TO 10                                                     000042
00123      42*           WRITE(6,20) IUN,B                                                       000045
00127      43*        20 FORMAT(1H0,30HIDENTIFICATION HEADER FOR UNIT,I3/(1H ,10A6))             000056
00130      44*           NO= NST*16.+.001                                                        000056
00131      45*           CALL NTRAN(IUN,6,NO,22)                                                 000070
00132      46*           IND(J)= L1                                                              000076
00133      47*           GO TO 300                                                               000100
00133      48*     C                                                                             000100
00133      49*     C                        TOO MANY BLOCKS READ                                 000100
00133      50*     C                                                                             000100
00134      51*       100 IF(T.GE.TO) GO TO 200                                                   000102
00136      52*           VAR= A(1,J)                                                             000105
00137      53*           IF(IMPL.EQ.2) WRITE(6,30) VAR,IUN                                       000111
00144      54*        30 FORMAT(1H0,39HFILE DATA OUT OF RANGE. INITIAL VALUE= ,                  000123
00144      55*          1  F12.5,9H  ON UNIT,I4)                                                 000123
00145      56*           IF(IMPL.EQ.2)ICNT=ICNT+1                                                000123
00147      57*           RETURN                                                                  000131
00147      58*     C                                                                             000131
00147      59*     C                        TABLE INTERPOLATION FOR OUTPUT                       000131
00147      60*     C                                                                             000131
00150      61*       200 IF(T.GE.TO+NOUT*H) GO TO 300                                            000135
00152      62*           XT(1)= TO                                                               000142
00153      63*           XT(2)= TO+H                                                             000144
00154      64*           N=NOUT                                                                  000146
00155      65*           VAR = TBLU1(T,XT,A(1,J),0,N)                                            000155
00156      66*           RETURN                                                                  000172
00156      67*     C                                                                             000172
00156      68*     C                        READ NEXT DATA BLOCK                                 000172
00156      69*     C                                                                             000172
00157      70*       300 IF(IND(J).EQ.0)GO TO 400                                                000176
00161      71*           CALL NTRAN(IUN,2,448,TEMP,IND(J),22)                                    000200
00162      72*           IF(IND(J).LT.0)GO TO 10                                                 000212
00164      73*           TO= TEMP(1)                                                             000220
00         74*           H= TEMP(2)                                                              000222
00         75*     C                                                                             000222
00         76*           DO 50 I=1,446                                                           000231
```

```
00171      77*          IF(TEMP(I+2).EQ.X)GO TO 60                                  000231
00173      78*       50 A(I,J)= TEMP(I+2)                                           000234
00175      79*          I=I+1                                                       000240
00176      80*       60 NOUT= I-1                                                   000244
00177      81*          IF(I.LT.447)IND(J)=0                                        000250
00201      82*          GO TO 200                                                   000260
00201      83*    C                                                                 000260
00201      84*    C                        END OF USEFUL DATA REACHED               000260
00201      85*    C                        (.99999 DATA VALUE ENCOUNTERED.)         000260
00201      86*    C                                                                 000260
00202      87*      400 N= NOUT                                                     000262
00203      88*          VAR=A(N,J)                                                  000270
00204      89*          IF(IMPL.EQ.2)WRITE(6,80)VAR,IUN                             000275
00211      90*       80 FORMAT(1H0,41HTIME POINT PAST TABLE RANGE. LAST VALUE=  ,   000307
00211      91*         1 F12.5,9H  ON UNIT,I4)                                      000307
00212      92*          IF(IMPL.EQ.2)ICNT=ICNT+1                                    000307
00214      93*          RETURN                                                      000315
00214      94*    C                                                                 000315
00214      95*    C                        READ ERROR OR END OF FILE REACHED        000315
00214      96*    C                                                                 000315
00215      97*       10 WRITE(6,90)IUN                                              000321
00220      98*       90 FORMAT(1H0,33HREAD ERROR OR END OF FILE ON UNIT,I4)         000326
00221      99*          STOP                                                        000326
00222     100*          END @ SUBROUTINE TA                                         000402
```

7.39 SECOND ORDER TRANSFER FUNCTION

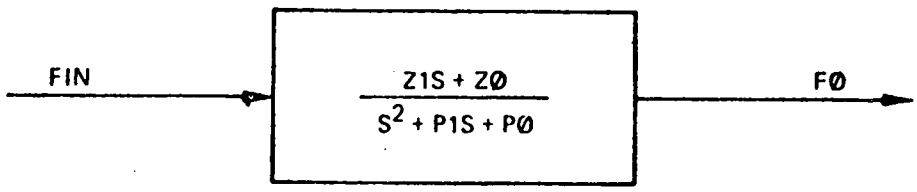

Inputs

Parameter/Port	Description
FIN	Input quantity
ZØ	Numerator coefficient
Z1	Numerator coefficient
PØ	Denominator coefficient
P1	Denominator coefficient

Outputs

Variable/Port	
X1	Intermediate state
FØ	Output quantity (state)

Calculation Sequence

$$\dot{X1} = Z\emptyset * FIN - P\emptyset * F\emptyset$$

$$\dot{F\emptyset} = X1 + Z1 * FIN - P1 * F\emptyset$$

NOTE: d.c. gain = $\frac{Z\emptyset}{P\emptyset}$; infinite frequency gain = 0.

```
SUBROUTINE TF        ENTRY POINT 000027

STORAGE USED  CODE(1) 000035; DATA(0) 000004; BLANK COMMON(2) 000000

 COMMON BLOCKS

 0003   CIO    000003

EXTERNAL REFERENCES (BLOCK, NAME)

 0004   NERR3S

STORAGE ASSIGNMENT  (BLOCK, TYPE, RELATIVE LOCATION, NAME)

 0003   000002 IDIAG     0000   000000 INJPS     0003   000000 IREAD     0003   000001 IWRITE


00100      1*     CTF                                                                          000000
00101      2*            SUBROUTINE TF(X1,X1DOT,IX1,FO,FODOT,IFO,FIN,ZO,Z1,PO,P1)              000000
00101      3*     C                                                                            000000
00101      4*     C   PURPOSE - TO SIMULATE A SECOND ORDER TRANSFER FUNCTION WITH              000000
00101      5*     C             FIRST ORDER NUMERATOR                                          000000
00101      6*     C                                                                            000000
00101      7*     C                          FO       Z1*S + ZO                                000000
00101      8*     C                         ----- = ------------                              000000
00101      9*     C                          FIN      2                                        000000
00101     10*     C                                  S + P1*S+PO                               000000
00101     11*     C                                                                            000000
00101     12*     C   METHOD  - SELF EXPLANATORY                                               000000
00101     13*     C                                                                            000000
00101     14*     C                                                                            000000
00101     15*     C   LIMITATIONS  -  NONE                                                     000000
00101     16*     C                                                                            000000
00101     17*     C                                                                            000000
00101     18*     C   WRITTEN BY      ADAM LLOYD          LATEST REVISION  NOV 75              000000
00101     19*     C                                                                            000000
00101     20*     C                                                                            000000
00101     21*     C   INPUT/OUTPUT LIST                                                        000000
00101     22*     C                                                                            000000
00101     23*     C   X1          INTERMEDIATE STATE VARIABLE        ANY       OUTPUT STATE    000000
00101     24*     C   X1DOT       STATE VARIABLE DERIVATIVE          ANY       OUTPUT STATE    000000
00101     25*     C   IX1         INTEGRATOR CONTROL                 ---       PROGRAM VAR     000000
00101     26*     C   FO          TRANSFER FUNCTION OUTPUT           ANY       OUTPUT STATE    000000
00101     27*     C   FODOT       TRANSFER FUNCTION OUTPUT DERIV.    ANY       OUTPUT STATE    000000
00101     28*     C   IFO         INTEGRATOR CONTROL                 ---       PROGRAM VAR     000000
00101     29*     C   FIN         TRANSFER FUNCTION INPUT            ANY       INPUT  VAR      000000
00101     30*     C   ZO          NUMERATOR COEFFICIENT              ANY       INPUT  VAR      000000
00101     31*     C   Z1          NUMERATOR COEFFICIENT              ANY       INPUT  VAR      000000
```

```
00101     32*     C   P0          DENOMINATOR COEFFICIENT          1/SEC2    INPUT  VAR          000000
00101     33*     C   P1          DENOMINATOR COEFFICIENT          1/SEC     INPUT  VAR          000000
00103     34*         COMMON/CIO/IREAD,IWRITE,IDIAG                                              000000
00104     35*         IF(IX1.NE.0)X1DOT=Z0*FIN-P0*F0                                             000000
00106     36*         IF(IF0.NE.0)F0DOT=X1+Z1*FIN-P1*F0                                          000007
00110     37*         RETURN                                                                     000020
00111     38*         END                                                                        000034
```

7.40 TIME CONVERSION

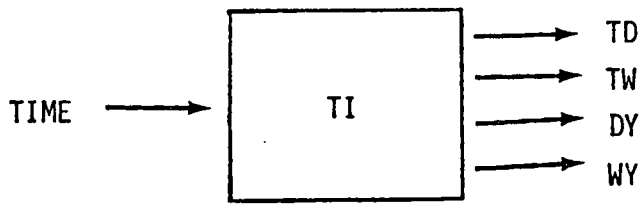

Converts simulation running time in hours to time referenced to start of day and start of week, and computes number of days and weeks elapsed since start of year.

Inputs

Parameter/Port	Description	Units
TO	Initial time of simulation from start of year	hrs
TIME	Running time (input via common/CTIME)	hrs

Outputs

Variable/Port		
TW	Time since start of week	hrs
TD	Time since start of day	hrs
WY	Number of weeks	-
DY	Number of days	-
MY	Number of months (approx.)	-
T	Running time from start of year	hrs
DW	Day of week	-

Calculation Sequence

```
T = AMØD(TO+TIME,8760)        TW = AMØD(T,168)
WY = T/168+1                  TD = AMØD(T,24)
DY = T/24+1                   DW = TW/24+1
MY = T/730+1
```

```
SUBROUTINE TI        ENTRY POINT 000122

STORAGE USED  CODE(1) 000155; DATA(0) 000031; BLANK COMMON(2) 000000

 COMMON BLOCKS

 0003   CTIME   000001

EXTERNAL REFERENCES (BLOCK, NAME)

 0004   NERR3$

STORAGE ASSIGNMENT  (BLOCK, TYPE, RELATIVE LOCATION, NAME)

 0000   000013 INJP$     0000 I 000002 MY        0000 I 000000 ND        0000 I 000001 NW        0003 R 000000 TIME
```

```
00100      1*      CTI                                                                                    000000
00101      2*            SUBROUTINE TI(T,TD,TW,DW,DY,WY,AMY,TO)                                           000000
00101      3*      C                                                                                      000000
00101      4*      C   PURPOSE    CONVERT SIMULATION TIME TO DAILY, WEEKLY, MONTHLY UNITS                 000000
00101      5*      C                                                                                      000000
00101      6*      C   WRITTEN BY  A.W. WARREN                              VERSION 1, MARCH 3 1977       000000
00101      7*      C                                                                                      000000
00101      8*      C   CALL SEQUENCE                                                                      000000
00101      9*      C              T   - SIMULATION TIME FROM START OF YEAR, HR          OUTPUT VAR.      000000
00101     10*      C              TD  - TIME OF DAY, HR                                 OUTPUT VAR.      000000
00101     11*      C              TW  - TIME SINCE START OF WEEK, HR                    OUTPUT VAR.      000000
00101     12*      C              DW  - DAY OF WEEK                                     OUTPUT VAR.      000000
00101     13*      C              DY  - DAY OF YEAR                                     OUTPUT VAR.      000000
00101     14*      C              WY  - WEEK OF YEAR                                    OUTPUT VAR.      000000
00101     15*      C              AMY - MONTH OF YEAR (APPROX.)                         OUTPUT VAR.      000000
00101     16*      C              TO  - SIMULATION INITIAL TIME FROM START OF YEAR, HR  INPUT PARM       000000
00101     17*      C                                                                                      000000
00103     18*            COMMON / CTIME / TIME                                                            000000
00104     19*            T = AMOD(TO + TIME,8760.)                                                        000000
00105     20*            TD = AMOD(T,24.)                                                                 000007
00106     21*            TW = AMOD(T,168.)                                                                000015
00107     22*            ND = TW/24.+1.001                                                                000023
00110     23*            DW = ND                                                                          000034
00111     24*            ND = T/24.+1.001                                                                 000037
00112     25*            DY = ND                                                                          000050
00113     26*            NW = T/168.+1.001                                                                000053
00114     27*            WY = NW                                                                          000065
00115     28*            MY = T/730.+1.001                                                                000070
00116     29*            AMY = MY                                                                         000102
00116     30*      C                                                                                      000102
001       31*            RETURN                                                                           000105
```

```
00120      32*          END                                                    000154
```

7.41 THERMAL LOAD

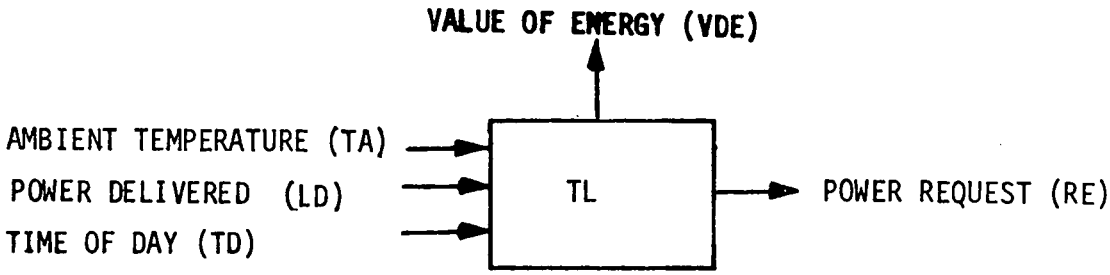

Thermal load is computed as a user specified function of ambient temperature and time of day. The actual load delivered is either the load requested or the maximum discharge rate of the thermal storage chamber. The value of the thermal energy delivered and % of total load actually delivered are also computed.

Basic Equation

RE = TLØ(TA)*TWT(TD)*NC

where

TLØ = Thermal load versus temperature table

TWT = Daily profile weighting function

NC = Normalizing constant

Tables	Description	Units
TLØ	Thermal load versus ambient temperature	kw
TWT	Daily profile weighting function (tabular with time of day)	

Inputs		
Parameter/Port		
TA	Ambient temperature	°F
LD	Power delivered	kw
TD	Time of day (0–24)	h
VE	Value of thermal energy	$/kwh
NC	Normalizing constant	

Outputs		
Variable/Port		
RE	Load request	kw
VDE	Total value of energy delivered (state)	$

Statistics		
PC	Cumulative percent of load delivered	–
SLD	Total energy delivered	kwh
SRE	Total energy requested	kwh

Calculation Sequence

1) Compute load request

RE = TLØ(TA)*TWT(TD)*NC

2) Value of energy dynamics

$\dot{VDE}$ = LD*VE

3) Statistics

SLD = SLD+LD* Δ/2

SRE = SRE+RE* Δ/2

PC = 100.* SLD/SRE

where Δ = integration step size

```
SUBROUTINE TL          ENTRY POINT 000173

STORAGE USED  CODE(1) 000251; DATA(0) 000033; BLANK COMMON(2) 000000

 COMMON BLOCKS

 0003   CIMPL  000001
 0004   CSIMUL 000010
 0005   CTIME  000001
 0006   COST   000006

EXTERNAL REFERENCES (BLOCK, NAME)

 0007   TBLU1
 0010   NERR3$

STORAGE ASSIGNMENT  (BLOCK, TYPE, RELATIVE LOCATION, NAME)

 0001   000034 100L      0006   000000 CC        0006 R 000004 CLD       0006   000001 CM        0006   000002 CO
 0006 R 000005 CRE       0006 R 000003 CV        0004   000000 DUM       0003 I 000000 IMPL      0000   000012 INJPS
 0000 I 000000 ITL       0000 I 000001 ITW       0007 R 000000 TBLU1     0005 R 000000 TIME      0004 R 000006 TINC
 0000 R 000003 TINC1     0000 R 000004 TLD       0004 R 000007 TMAX      0000 R 000002 TMAX1     0000 R 000005 TW


00100      1*      CTL                                                                                    000001
00101      2*            SUBROUTINE TL(TLO,TWT,VDE,DVD,IVD,RE,PC,SLD,SRE,TA,LD,TD,VE,NC)                 000001
00101      3*      C                                                                                      000001
00101      4*      C   PURPOSE    COMPUTE ENERGY RESPONSE FROM A THERMAL LOAD REQUEST                     000001
00101      5*      C                                                                                      000001
00101      6*      C   METHOD     ENERGY DELIVERED IS EQUAL TO THE LOAD REQUESTED OR                      000001
00101      7*      C                                                                                      000001
00101      8*      C              THE MAXIMUM DISCHARGE RATE.                                             000001
00101      9*      C                                                                                      000001
00101     10*      C   WRITTEN BY F. O. MAHONY                    VERSION 1, APRIL 1 1977                 000001
00101     11*      C                                                                                      000001
00101     12*      C   CALL SEQUENCE                                                                      000001
00101     13*      C         TABLES                                                                       000001
00101     14*      C             TLO - THERMAL LOAD AS FUNCTION OF AMBIENT TEMPERATURE                    000001
00101     15*      C             TWT - DAILY PROFILE WEIGHTING FUNCTION VS TIME OF DAY                    000001
00101     16*      C                                                                                      000001
00101     17*      C         OUTPUTS                                                                      000001
00101     18*      C             VDE - VALUE OF ENERGY DELIVERED (STATE), $                               000001
00101     19*      C             DVD - DERIVATIVE OF VDE                                                  000001
00101     20*      C             IVD - INDICATOR FOR VDE                                                  000001
00101     21*      C             RE  - LOAD REQUEST, KW                                                   000001
00101     22*      C             PC  - CUMULATIVE PERCENT OF LOAD DELIVERED                               000001
00101     23*      C             SLD - TOTAL ENERGY DELIVERED, KWH                                        000001
00101     24*      C             SRE - TOTAL ENERGY REQUESTED, KWH                                        000001
```

```
00101   25*   C                                                                  000001
00101   26*   C        INPUTS                                                    000001
00101   27*   C            TA  - AMBIENT TEMPERATURE, DEG F                      000001
00101   28*   C            LD  - POWER DELIVERED, KW                             000001
00101   29*   C            TD  - TIME OF DAY, HR                                 000001
00101   30*   C            VE  - VALUE OF THERMAL ENERGY, $/KWH                  000001
00101   31*   C            NC  - NORMALIZING CONSTANT FOR LOAD REQUEST           000001
00101   32*   C                                                                  000001
00103   33*         DIMENSION TLO(3),TWT(5)                                      000001
00104   34*         COMMON/CIMPL/IMPL /CSIMUL/ DUM(6),TINC,TMAX/CTIME/TIME       000001
00105   35*         COMMON/COST /CC,CM,CO,CV,CLD,CRE                             000001
00106   36*         REAL LD,NC                                                   000001
00106   37*   C                                                                  000001
00107   38*         ITL=TLO(2)                                                   000001
00110   39*         ITW=TWT(2)                                                   000010
00111   40*         IF(IMPL.GT.0)GO TO 100                                       000017
00111   41*   C                                                                  000017
00111   42*   C                                                                  000017
00113   43*         TMAX1=TMAX*0.99999                                           000022
00114   44*         TINC1=TINC*.5                                                000025
00114   45*   C                                                                  000025
00115   46*         PC =0.0                                                      000030
00116   47*         SLD=0.0                                                      000031
00117   48*         SRE=0.0                                                      000032
00117   49*   C                                                                  000032
00117   50*   C                                                                  000032
00117   51*   C                    COMPUTE LOAD REQUEST                          000032
00117   52*   C                                                                  000032
00120   53*   100 TLD=TBLU1(TA,TLO(4),TLO(ITL+4),1,-ITL)                          000034
00121   54*         TW=TBLU1(TD,TWT(4),TWT(ITW+4),1,-ITW)                        000053
00121   55*   C                                                                  000053
00122   56*         RE =TLD*TW*NC                                                000073
00122   57*   C                                                                  000073
00122   58*   C                    VALUE OF ENERGY                               000073
00122   59*   C                                                                  000073
00123   60*         IF(IVD.NE.0)DVD=LD*VE                                        000076
00123   61*   C                                                                  000076
00125   62*         IF(IMPL.LE.1)RETURN                                          000103
00125   63*   C                                                                  000103
00125   64*   C                    PERFORMANCE STATISTICS                        000103
00125   65*   C                                                                  000103
00127   66*         SLD=SLD+LD*TINC1                                             000115
00130   67*         SRE=SRE+RE*TINC1                                             000120
00130   68*   C                                                                  000120
00131   69*         IF(SRE.GT.0.0)PC=100.0*SLD/SRE                               000124
00131   70*   C                                                                  000124
00133   71*         IF(TIME.LT.TMAX1)RETURN                                      000133
00133   72*   C                                                                  000133
00135   73*         CV=CV+VDE                                                    000142
00136   74*         CLD=CLD+SLD-LD*TINC1                                         000145
00137   75*         CRE= CRE+ SRE-RE*TINC1                                       000151
00137   76*   C                                                                  000151
001[illegible]  77*         RETURN                                               000157
001     78*         END                                                          000250
```

7.42 AMBIENT TEMPERATURE

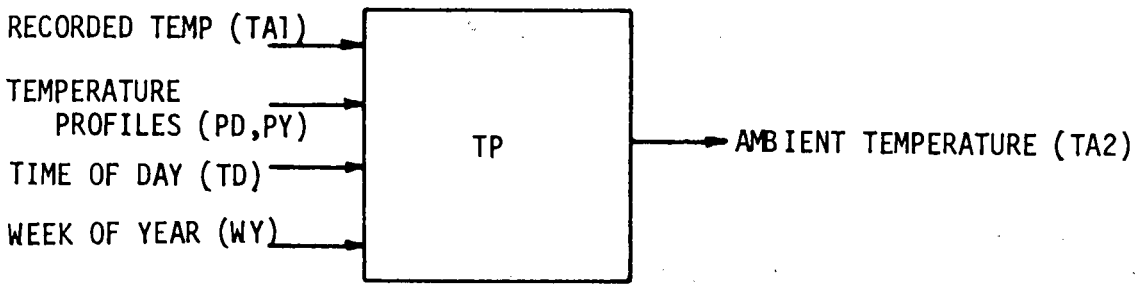

This component is very similar to the wind component. Ambient temperature is output either from user supplied time histories on storage files or by generating a set of random numbers with user specified random variations. If user supplied profiles are available, then the temperatures are generated from the following equation:

$$TA2 = [PD(TD) + CN(t)] * PY(WY)/M\emptyset$$

where PD and PY are the user supplied daily and weekly profiles, TD and WY are the time of the day and week of the year, CN is a colored noise term and MO is the average value of PY:

$$M\emptyset = \frac{1}{J} \sum_{j=1}^{J} PY(j)$$

Tables		Description	Units
PD		Daily profile versus TD	^{o}F
PY		Yearly profile versus WY	arbitrary

Inputs

Parameter/Port			
TA	1	Ambient temperature data file	^{o}F
TD		Time of day	hr
WY		Week of the year	-
CT		Correlation time of colored noise	hr
MN		Mean temperature of colored noise	^{o}F
STD		Standard deviation of colored noise	^{o}F

Outputs

Variable/Port			
CN		Colored noise sample	^{o}F
TA	2	Ambient temperature	^{o}F
AV		Mean of daily temperature	^{o}F
MO		Mean of yearly profile	
TIM		Last time a random sample was generated	hr

Calculation Sequence

1) Initialization (first pass only)

Compute AV, MO, and initial CN

$$AV = MN + \frac{1}{N} \sum_{j=1}^{N} PD(j)$$

2) Check for data file input

If TA1 = .99999 go to 3)

TA2 = TA1

Return

3) Generate colored noise sample CN

If TIME = TIM RETURN

$$A = \begin{cases} EXP(-TINC/CT) & CT>0 \\ 0. & CT=0 \end{cases}$$

where TINC = integration step size

CN = CN * A + W

Where W is white noise with mean = MN*(1-A) and

standard deviation = STD* $\sqrt{1-A^2}$

TIM = TIME

4) Compute Temperature

TA2 = (PD(TD) +CN) *PY (WY)/MO

```
SUBROUTINE TP          ENTRY POINT 000265

STORAGE USED  CODE(1) 000350; DATA(0) 000044; BLANK COMMON(2) 000000

 COMMON BLOCKS

 0003   CIMPL  000001
 0004   CSIMUL 000007
 0005   CTIME  000001

EXTERNAL REFERENCES (BLOCK, NAME)

 0006   RN
 0007   TBLU1
 0010   EXP
 0011   SQRT
 0012   NERR3$

STORAGE ASSIGNMENT  (BLOCK, TYPE, RELATIVE LOCATION, NAME)

 0001   000121 1DL       0001   000127 100L      0001   000057 1176      0001   000102 1276      0001   000247 150L
 0000 R 000005 A         0000 R 000000 AX        0000 R 000011 DTP       0004   000000 DUM       0000 I 000003 I
 0003 I 000000 IMPL      0000   000016 INJPS     0000 I 000004 L         0000 I 000001 ND        0000 I 000002 NY
 0007 R 000000 TBLU1     0005 R 000000 TIME      0004 R 000006 TINC      0000 R 000010 W         0000 R 000006 WMN
 0000 R 000007 WSD       0000 R 000012 YTP
```

```
00100      1*      CTP                                                                    000007
00101      2*            SUBROUTINE TP (PD,PY,TAO,AV,XM,TIMO,XN, TAI, TD,WY,CT,XMN,STD)   000007
00101      3*      C                                                                      000007
00101      4*      C   PURPOSE    GENERATE AMBIENT TEMPERATURE FROM DAILY, YEARLY AND RANDOM DATA  000007
00101      5*      C                                                                      000007
00101      6*      C   METHOD     COLORED NOISE WITH SPECIFIED PARMS IS ADDED TO A MEAN DAILY  000007
00101      7*      C              PROFILE AND MULTIPLIED BY A YEARLY PROFILE.             000007
00101      8*      C                                                                      000007
00101      9*      C   WRITTEN BY  A.W. WARREN                          VERSION 1, MARCH 7 1977  000007
00101     10*      C                                                                      000007
00101     11*      C   CALL SEQUENCE                                                      000007
00101     12*      C         TABLES                                                       000007
00101     13*      C              PD  - MEAN DAILY PROFILE, DEG.F                         000007
00101     14*      C              PY  - MEAN YEARLY PROFILE, DEG.F                        000007
00101     15*      C         OUTPUTS                                                      000007
00101     16*      C              TAO - AMBIENT TEMPERATURE OUTPUT, DEG.F                 000007
00101     17*      C              AV  - MEAN DAILY TEMPERATURE, DEG.F                     000007
00101     18*      C              XM  - MEAN YEARLY TEMPERATURE,DEG.F                     000007
00101     19*      C              TIMO- LAST TIME COLORED NOISE WAS USED, HR              000007
00101     20*      C              XN  - COLORED NOISE SAMPLE, DEG.F                       000007
00101     21*      C                                                                      000007
```

TP

```
00101     22*     C          INPUTS                                                    000007
00101     23*     C               TAI - TEMPERATURE INPUT FROM DATA FILE,DEG.F         000007
00101     24*     C               TO  - TIME OF DAY, HR                                000007
00101     25*     C               WY  - WEEK OF YEAR (1-52)                            000007
00101     26*     C               CT  - CORRELATION TIME FOR COLORED NOISE, HR         000007
00101     27*     C               XMN - MEAN TEMPERATURE OF COLORED NOISE, DEG.F       000007
00101     28*     C               STD - STANDARD DEVIATION OF COLORED NOISE, DEG.F     000007
00101     29*     C                                                                    000007
00103     30*           DIMENSION PD(1),PY(1)                                          000007
00104     31*           COMMON/CIMPL/IMPL /CSIMUL/DUM(6),TINC /CTIME/TIME              000007
00105     32*           DATA AX /.99999/                                               000007
00105     33*     C                          INITIALIZATION                            000007
00105     34*     C                                                                    000007
00107     35*           ND=PD(2)                                                       000007
00110     36*           NY=PY(2)                                                       000016
00111     37*           IF(IMPL.GT.0) GO TO 10                                         000025
00113     38*           TIMO=-1.                                                       000030
00114     39*           CALL RN(XN,AX,STD,XMN)                                         000032
00114     40*     C                                                                    000032
00115     41*           AV = 0.                                                        000040
00116     42*           DO 20 I=1,ND                                                   000057
00121     43*           L = 3+ND+I                                                     000057
00122     44*        20 AV = AV + PD(L)                                                000062
00124     45*           AV = AV/ND +XMN                                                000071
00124     46*     C                                                                    000071
00125     47*           XM=0.                                                          000076
00126     48*           DO 30 I=1,NY                                                   000102
00131     49*           L=3+NY+I                                                       000102
00132     50*        30 XM=XM+PY(L)                                                    000107
00134     51*           XM=XM/NY                                                       000114
00134     52*     C                          CHECK FOR DATA FILE INPUT                 000114
00134     53*     C                                                                    000114
00135     54*        10 IF(TAI.EQ. .99999) GO TO 100                                   000121
00137     55*           TAO = TAI                                                      000123
00140     56*           GO TO 150                                                      000125
00140     57*     C                          GENERATE COLORED NOISE SAMPLE XN          000125
00140     58*     C                                                                    000125
00141     59*       100 IF(  TIMO.EQ.TIME) GO TO 150                                   000127
00143     60*           A=0.                                                           000131
00144     61*           IF(CT.GT.0.) A=EXP(-TINC/CT)                                   000132
00146     62*           WMN = XMN*(1.-A)                                               000152
00147     63*           WSD = STD*SQRT(1.-A*A)                                         000156
00150     64*           CALL RN(W,AX,WSD,WMN)                                          000167
00151     65*           XN = A*XN+W                                                    000175
00151     66*     C                          COMPUTE AMBIENT TEMPERATURE               000175
00151     67*     C                                                                    000175
00152     68*           DTP = TBLU1(TO,PD(4),PD(4+ND),1,-ND)                           000201
00153     69*           YTP = TBLU1(WY,PY(4),PY(4+NY),1,-NY)                           000220
00154     70*           TAO = (DTP + XN)*YTP/ XM                                       000237
00155     71*           TIMO=TIME                                                      000244
00155     72*     C                                                                    000244
00156     73*       150 RETURN                                                         000247
00157     74*           END                                                            000347
```

7.43 VARIABLE RATIO TRANSMISSION

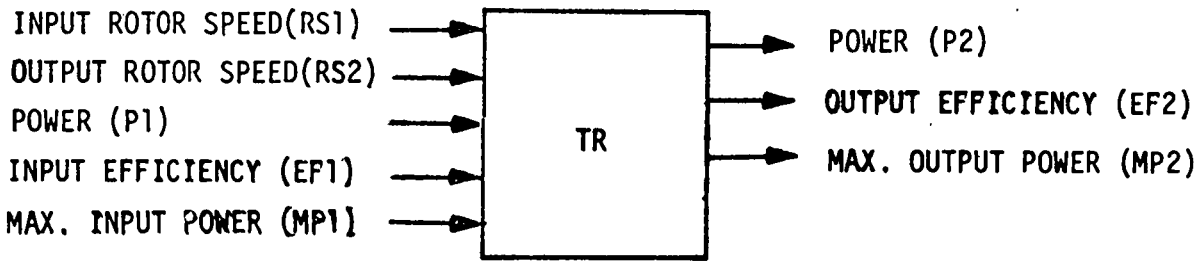

This component models a transmission which couples a fixed speed rotor input (or output) to a variable speed rotor output (or input) component. Power losses are modeled as a table lookup depending on gear ratio and input power.

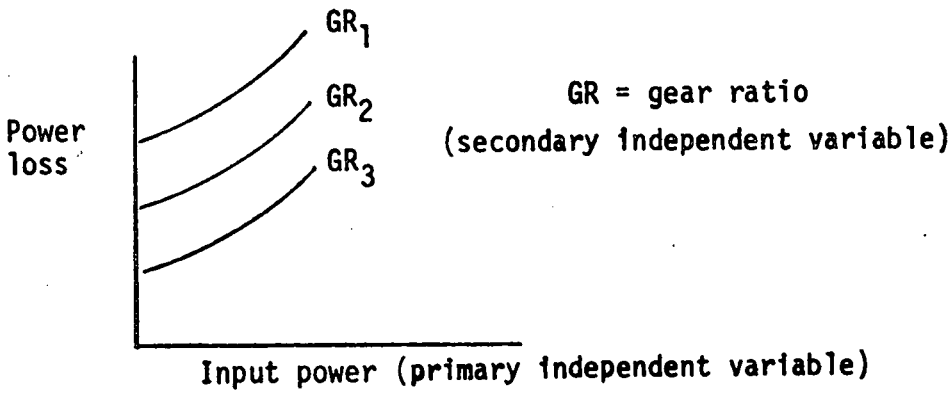

FIGURE 7.43 TRANSMISSION MODEL - LOOKUP TABLE

Tables		Description	Units
PLØ		Power loss versus input power and gear ratio (TABLE DIMENSION = 66)	kw

Inputs

Parameter/Port			
RS	1	Input rotor speed	rpm
RS	2	Output rotor speed	rpm
P	1	Input power	kw
EF	1	Input product efficiency	-
MP	1	Maximum input power	kw
CC		Capital cost/year	$
CM		Maintenance cost/year	$

Outputs

Variable/Port			
P	2	Output power	kw
TØ		Output torque	ft-lb
PL		Power loss	kw
EF	2	Output product efficiency	-
MP	2	Maximum power output	kw

Calculation Sequence

If P1 ≤ 0 or RS1 ≤ 0 set P2 = TØ = PL = 0 and go to 4)

1) Determine gear ratio and power terms

GR = RS2/RS1

PL = PLØ(P1,GR)

P2 = P1 - PL

2) Determine output torque

TØ = P2*737.6/(RS2*(2π/60))

3) Efficiency and maximum power

EF2 = EF1*(P2/P1)

If P2 ≤ 0, set EF2 = EF1 and write Diagnostic

MP2 = MP1 - PLØ(MP1,GR)

MP2 ≤ 0 ⇨ DIAGNOSTIC

4) Compute Costs

```
SUBROUTINE TR          ENTRY POINT 000307

STORAGE USED  CODE(1) 000374; DATA(0) 000075; BLANK COMMON(2) 000000

 COMMON BLOCKS

 0003    CIMPL   000002
 0004    CTIME   000001
 0005    CSIMUL  000010
 0006    COST    000002

EXTERNAL REFERENCES (BLOCK, NAME)

 0007    TBLU2
 0010    NWDU$
 0011    NIO2$
 0012    NERR3$

STORAGE ASSIGNMENT  (BLOCK, TYPE, RELATIVE LOCATION, NAME)

 0001    000014 10L       0001    000245 400L      0000    000007 408F      0001    000165 409L      0000    000023 508F
 0000 R 000006 AMP2       0006 R 000000 CCI        0006 R 000001 CMI        0005    000000 DUM       0000 R 000005 GR
 0003 I 000001 ICNT       0003 I 000000 IMPL       0000    000047 INJP$     0000 I 000004 MN4       0000 I 000003 M4
 0000 I 000001 NNGR       0000 I 000002 NNP1       0007 R 000000 TBLU2      0004 R 000000 TIME       0005 R 000007 TMAX
 0000 R 000000 TMAX1
```

```
00100      1*      CTR                                                                    000003
00101      2*            SUBROUTINE TR(PLO,P2,TO,PL,EF2,MP2,RS1,RS2,P1,EF1,MP1,CC,CM)     000003
00101      3*      C                                                                      000003
00101      4*      C              PURPOSE    TRANSMISSION MODEL                           000003
00101      5*      C                                                                      000003
00101      6*      C              METHOD     OUTPUT POWER AND TORQUE COMPUTED FROM        000003
00101      7*      C                         INPUT AND OUTPUT ROTOR SPEEDS. POWER         000003
00101      8*      C                         LOSS MODELED BY TABLE LOOKUP DEPENDING       000003
00101      9*      C                         ON GEAR RATIO AND INPUT POWER                000003
00101     10*      C                                                                      000003
00101     11*      C              WRITTEN BY Y.K.CHAN          VERSION 1,JUNE 17,1977      000003
00101     12*      C                                                                      000003
00101     13*      C  CALL SEQUENCE                                                       000003
00101     14*      C        TABLES                                                        000003
00101     15*      C              PLO -POWER LOSS VERSUS INPUT POWER AND GEAR RATIO ,KW   000003
00101     16*      C        OUTPUTS                                                       000003
00101     17*      C              P2  -OUTPUT POWER,KW                                    000003
00101     18*      C              TO  -OUTPUT TORQUE,FT-LB                                000003
00101     19*      C              PL  -POWER LOSS,KW                                      000003
00101     20*      C              EF2 -OUTPUT PRODUCT EFFICIENCY                          000003
00101     21*      C              MP2 -MAXIMUM POWER OUTPUT,KW                            000003
```

```
00101     22*     C          INPUTS                                                    000003
00101     23*     C               RS1 -INPUT ROTOR SPEED,RPM                           000003
00101     24*     C               RS2 -OUTPUT ROTOR SPEED,RPM                          000003
00101     25*     C               P1  -INPUT POWER,KW                                  000003
00101     26*     C               EF1 -INPUT PRODUCT EFFICIENCY                        000003
00101     27*     C               MP1 -MAXIMUM INPUT POWER,KW                          000003
00101     28*     C               CC  -CAPITOL COST/YEAR,$                             000003
00101     29*     C               CM  -MAINTENANCE COST/YEAR,$                         000003
00101     30*     C                                                                    000003
00103     31*          COMMON/CIMPL/IMPL,ICNT/CTIME/TIME/CSIMUL/DUM(7),TMAX            000003
00103     32*         X      /COST/CCI,CMI                                             000003
00104     33*          REAL MP2,MP1                                                    000003
00105     34*          DIMENSION PLO(1)                                                000003
00105     35*     C                                                                    000003
00106     36*          IF(IMPL.GT.0)GO TO 10                                           000003
00110     37*          TMAX1=TMAX*.99999                                               000006
00111     38*          RS2=RS1                                                         000011
00112     39*       10 CONTINUE                                                        000014
00113     40*          NNGR=PLO(3)                                                     000014
00114     41*          NNP1=PLO(2)                                                     000022
00115     42*          M4=NNGR*4                                                       000031
00116     43*          MN4=NNP1*M4                                                     000033
00116     44*     C                                                                    000033
00116     45*     C               COMPUTE GEAR RATIO AND POWER TERMS                   000033
00116     46*     C                                                                    000033
00117     47*          P2=0.                                                           000035
00120     48*          T0=0.                                                           000036
00121     49*          PL=0.                                                           000037
00122     50*          EF2=EF1                                                         000040
00123     51*          MP2=MP1                                                         000042
00124     52*      100 IF((RS1.LE.0.).OR.(P1.LE.0.))GO TO 400                          000044
00126     53*          P2=P1                                                           000060
00127     54*      200 IF(RS2.LE.0)GO TO 400                                           000062
00131     55*      300 GR=RS2/RS1                                                      000071
00132     56*          PL=TBLU2(P1,GR,PLO(M4),PLO(4),PLO(MN4),1,1,-NNP1,-NNGR,NNP1,NNGR)  000074
00133     57*          P2=P1-PL                                                        000124
00133     58*     C                                                                    000124
00133     59*     C               OUTPUT TORQUE                                        000124
00133     60*     C                                                                    000124
00134     61*          T0=P2*737.6*30./(RS2*3.14159)                                   000126
00134     62*     C                                                                    000126
00134     63*     C               EFFICIENCY AND MAXIMUM POWER                         000126
00134     64*     C                                                                    000126
00135     65*          EF2=EF1*P2/P1                                                   000134
00136     66*          IF(EF2.GT.0.)GO TO 409                                          000140
00140     67*          EF2=EF1                                                         000142
00141     68*          IF(IMPL.EQ.2)WRITE(6,408)PL,P1                                  000144
00146     69*      408 FORMAT(1H0,25H TRANSMISSION POWER LOSS ,F12.3,                  000156
00146     70*         X  21H EXCEEDS INPUT POWER  ,F12.3)                              000156
00147     71*          IF(IMPL.EQ.2)ICNT=ICNT+1                                        000156
00151     72*      409 CONTINUE                                                        000165
00152     73*          AMP2=TBLU2(MP1,GR,PLO(M4),PLO(4),PLO(MN4),1,1,-NNP1,-NNGR,      000165
00152     74*         XNNP1,NNGR)                                                      000165
00153     75*                                                                          000220
00153     76*           MP2=MP1-AMP2                                                   000220
00154     77*          IF(MP2.GT.0.)GO TO 400                                          000222
00[illegible]  78*     IF(IMPL.EQ.2)WRITE(6,508)AMP2,MP1                               000224
```

```
00163      79*        508 FORMAT(1H0,25H TRANSMISSION POWER LOSS ,F12.3,      000236
00163      80*           X 29H EXCEEDS MAXIMUM INPUT POWER  ,F12.3)           000236
00164      81*            IF(IMPL.EQ.2)ICNT=ICNT+1                            000236
00164      82*      C                                                         000236
00166      83*        400 IF(IMPL.LE.1)RETURN                                 000245
00170      84*            IF(TIME.LT.TMAX1)RETURN                             000253
00172      85*            CCI=CCI+CC                                          000262
00173      86*            CMI=CMI+CM                                          000265
00173      87*      C                                                         000265
00174      88*            RETURN                                              000270
00175      89*            END                                                 000373
```

7.44 THERMAL STORAGE CHAMBER

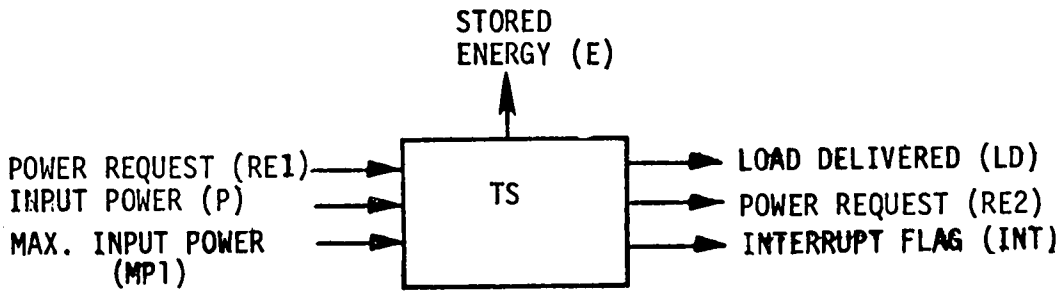

The thermal storage chamber is modeled by a "lumped" parameter approach. The entire storage media mass is characterized by a single temperature (no temperature gradient). The storage media is either a sensible heat or a phase change media. Energy is input via electrical resistance heaters and withdrawn by a heat exchanger. Energy is deposited in the media at a rate equal to the available electrical power up to a maximum charging power. The discharge heat exchanger fluid mass flow rate is adjusted to provide the desired heat load demand. The maximum mass flow rate condition determines the maximum thermal load. The maximum energy limit represents the point where the maximum media temperature is reached.

The model initially calculates the required storage media mass to provide the rated thermal energy storage (design point). Cost calculations are also made on the design point conditions. Initial checks on charge and discharge power and initial stored energy level are made. The storage temperature is determined based on the energy level.

<u>Basic Equation</u>

E = P- LD-NU*E

Tables		Description	Units
HT		Media temperature versus enthalpy in KWH/LB[1]	^{o}F

Inputs

Parameter/Port			
P		Input power	kw
RE	1	Demand thermal load	kw
NU		Stored energy loss coefficient (D = 0.02)	$(h)^{-1}$
TS		Rated storage time[2]	h
VØ		Rated input voltage[2]	V
TM1		Maximum allowable storage temperature (D = 212)	^{o}F
TØ1		Minimum allowable storage temperature (D = 60)	^{o}F
DH		Design point enthalpy	kwh/lb
PD		Rated storage thermal power[2]	kw
PM		Maximum charge rate (D = 2*PD)	kw
MFM		Maximum working fluid mass flow rate (D = 9000)	lb/h
TDE		Temperature deadband for priority resequence (D = 4)	^{o}F
EF	1	Input product efficiency	-
MP	1	Maximum input charging rate (D = $1.X10^{8}$)	kw
CP2		Working fluid heat capacity (D = $2.93X10^{-4}$)	kwh/lb-^{o}F
TØ2		Working fluid return temperature (D = 40)	^{o}F
TM2		Maximum allowable working fluid temperature (D = 212)	^{o}F
R		Effective heat exchanger thermal resistance (D = $3.08X10^{-4}$)	^{o}F/kw
CM		Storage device yearly maintenance cost (D = 0.6)	$/kw
CSA		Storage device capacity cost (D = 50)	$/kw
CSB		Storage device energy cost (D = 15.2)	$/kwh
LE		Unit life expectancy	years

D - Default values specified
1 - See Figure 7.44
2 - Design point conditions

Outputs

Variable/Port		Description	Units
E		Stored energy (state)	kwh
I		Input current	amps
MP	2	Maximum discharge rate allowable	kw
INT		Priority interrupt flag	-
T		Storage temperature	^oF
M		Required storage media mass	lb
CCØ		Storage device capital cost/year	$
RE	2	Maximum charging rate request	kw
MF		Working fluid mass flow rate	lb/h
LD		Power Delivered	kw

Statistics

TSU	Maximum storage temperature	^oF
TSL	Minimum storage temperature	^oF
ME	Maximum stored energy	kwh
MFU	Maximum working fluid mass flow rate	lb/h

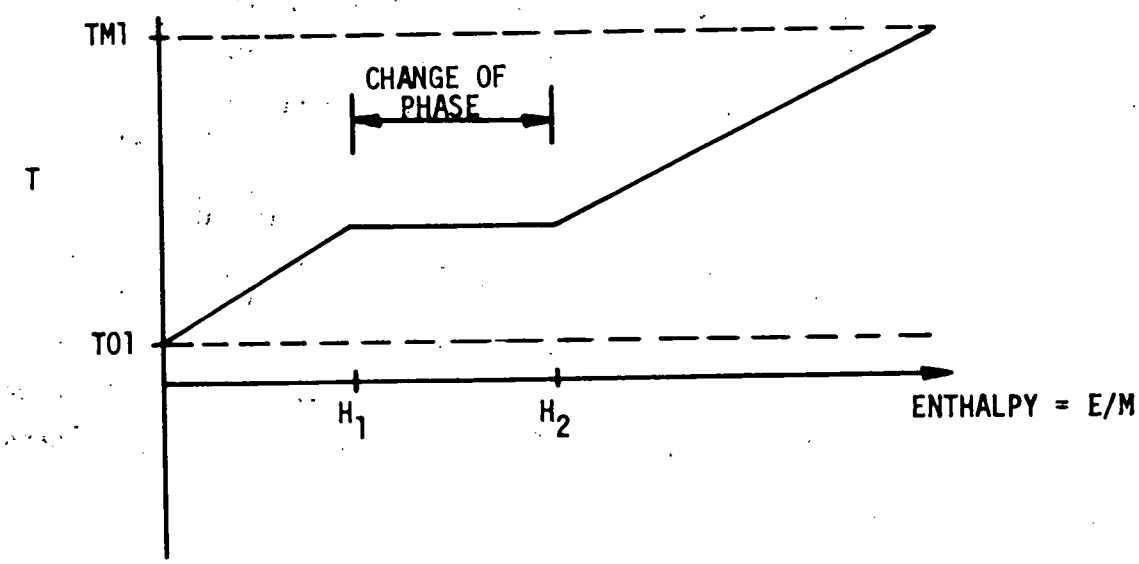

FIGURE 7.44: TEMPERATURE - ENTHALPY DIAGRAM

The calculation sequence and default values assume a thermal storage device sized to provide 10kw for 24 hours. A paraffin wax phase change storage medium is assumed. Water is assumed as the thermal transport fluid. Costs are assumed to be given by data for the phase change storage device given in Reference 1. The thermal resistance value, R, is assumed equal to that determined for the device of Reference 1. The value for the maximum charging rate, PM, reflects the acceptance of twice the design charge rate. The actual numbers which should be used will depend on specific design and performance requirements obtained from a desired application.

Calculation Sequence

1) Media mass, capital cost, maintenance cost (first pass)

$$M = \frac{PD*TS}{DH}$$

$$CC = (CSA+CSB*TS)*PD/LE$$

$$CM = CM*PD$$

2) Storage Temperature and Working Fluid Temperature

$$T = HT(E/M)$$

$$TF = \min\{TM2, \max[T\emptyset 2, T-RE1*R]\}$$

$$E2 = M*HT^{-1}(TM1)$$

1. "Advanced Thermal Energy Storage," BEC/EPRI RP 788-1, July 1976.

Calculation Sequence Cont.

3) Discharge Rate and Thermal Load

$$E1 = M*HT^{-1}(T01)$$

$$MP2 = MFM*CP2*(TF-T02)$$

$$LD=MIN(RE1,MP2,(E-E1)/TINC)$$

$$MF = LD/(CP2*(TF-T02))$$

4) Diagnostic Checks

$$MF \leq MFM$$

$$P \leq PM$$

$$T01 \leq T \leq TM1$$

5) Current calculations

$$I = \frac{P*1000}{V0}$$

6) Energy dynamics

$$\dot{E} = P-LD-NU*E$$

7) Maximum Charging Rates

$$RE2 = min(PM,MP1,(E2-E)/TINC)/EF1$$

where TINC = integration step size

Calculation Sequence Cont.

8) Priority resequencing

if $T \leq T01$, INT = 1

if $T \geq T01+TDE$ and INT=1, INT=0

if $T \geq TM1$, INT=-1

if $T < TM1-TDE$ and INT=-1, INT=0

9) Compute Statistics and Costs

```
SUBROUTINE TS        ENTRY POINT 000612

STORAGE USED  CODE(1) 001071; DATA(0) 000131; BLANK COMMON(2) 000000

 COMMON BLOCKS

 0003   CIMPL  000002
 0004   CTIME  000001
 0005   CSIMUL 000010
 0006   COST   000002

EXTERNAL REFERENCES (BLOCK, NAME)

 0007   TBLU1
 0010   NWDU$
 0011   NIO2$
 0012   NERR3$

STORAGE ASSIGNMENT  (BLOCK, TYPE, RELATIVE LOCATION, NAME)

 0001   000144 100L      0000   000007 1010F     0000   000025 102CF     0000   000043 1030F     0001   000407 200L
 0000 R 000006 A         0006 R 000000 CCI       0006 R 000001 CMI       0005 R 000000 DUM       0000 R 000003 E1
 0003 I 000001 ICN       0003 I 000000 IMPL      0000   000107 INJP$     0000 I 000002 NH        0000 R 000005 PM1
 0007 R 000000 TBLU1     0000 R 000004 TF        0004 R 000000 TIME      0000 R 000001 TINC      0005 R 000007 TMAX
 0000 R 000000 TMAX1
```

```
00100      1*      CTS                                                                    000000
00101      2*            SUBROUTINE TS(HT,E,DE,IE,I,MP2,INT,T,M,CCO,RE,MF,LD              000000
00101      3*           1              ,TSU,TSL,ME,MFU,P,RE1,NU,TSO,VO,TM1,TO1,DH,PD,PM,   000000
00101      4*           2         MFM,TDE,EF1,MP1,CP2,TO2,TM2,R,CM,CSA,CSB,LE)             000000
00101      5*      C                                                                      000000
00101      6*      C   PURPOSE    COMPUTE ENERGY CONTAINED IN A THERMAL STORAGE MEDIA      000000
00101      7*      C                                                                      000000
00101      8*      C   METHOD     A PHASE CHANGE OR SENSIBLE HEAT MEDIA IS MODELED AS     000000
00101      9*      C                                                                      000000
00101     10*      C              A SINGLE TEMPERATURE MASS WITH NO GRADIENTS.            000000
00101     11*      C                                                                      000000
00101     12*      C   WRITTEN BY F. O. MAHONY              VERSION 2, JULY 1977          000000
00101     13*      C                                                                      000000
00101     14*      C   CALL SEQUENCE                                                      000000
00101     15*      C                                                                      000000
00101     16*      C         TABLES                                                       000000
00101     17*      C             HT  - MEDIA TEMPERATURE VERSUS ENTHALPY IN KWH/LB, DEG F 000000
00101     18*      C         OUTPUTS                                                      000000
00101     19*      C             E   - STORED ENERGY (STATE VARIABLE), KWH                000000
00101     20*      C             DE  - POWER INTO STORAGE, KW                             000000
00101     21*      C             IE  - STATUS INDICATOR                                   000000
```

```
00101      22*      C              I    - INPUT ELECTRIC CURRENT, KW                                    000000
00101      23*      C              MP2  - MAXIMUM DISCHARGE RATE ALLOWABLE, KW                          000000
00101      24*      C              INT  - PRIORITY FLAG INTERRUPT                                       000000
00101      25*      C              T    - STORAGE TEMPERATURE, DEG F                                    000000
00101      26*      C              M    - REQUIRED STORAGE MEDIA MASS, LB                               000000
00101      27*      C              CCO  - STORAGE DEVICE CAPITAL COST/YEAR, $                           000000
00101      28*      C              RE   - MAXIMUM CHARGING RATE REQUEST, KW                             000000
00101      29*      C              MF   - WORKING FLUID MASS FLOW RATE, LB/HR                           000000
00101      30*      C              LD   - THERMAL LOAD DELIVERED, KW                                    000000
00101      31*      C              TSU  - MAXIMUM STORAGE TEMPERATURE, DEG F                            000000
00101      32*      C              TSL  - MINIMUM STORAGE THEMPERATURE, DEG F                           000000
00101      33*      C              ME   - MAXIMUM STORED ENERGY, KWH                                    000000
00101      34*      C              MFU  - MAXIMUM WORKING FLUID MASS FLOW RATE, LB/HR                   000000
00101      35*      C          INPUTS                                                                   000000
00101      36*      C              P    - INPUT POWER, KW                                               000000
00101      37*      C              RE1  - THERMAL DISCHARGE REQUEST, KW                                 000000
00101      38*      C              NU   - STORAGE ENERGY LOSS COEFFICIENT, 1/HR                         000000
00101      39*      C              TSO  - RATED STORAGE TIME, HR                                        000000
00101      40*      C              VO   - RATED INPUT VOLTAGE, VOLTS                                    000000
00101      41*      C              TM1  - MAXIMUM ALLOWABLE STORAGE TEMPERATURE, DEG F                  000000
00101      42*      C              TO1  - MINIMUM ALLOWABLE STORAGE TEMPERATURE, DEG F                  000000
00101      43*      C              DH   - DESIGN POINT ENTHALPY, KWH/LB                                 000000
00101      44*      C              PD   - RATED STORAGE THERMAL POWER, KW                               000000
00101      45*      C              PM   - MAXIMUM CHARGE RATE, KW                                       000000
00101      46*      C              MFM  - MAXIMUM WORKING FLUID MASS FLOW RATE, LB/HR                   000000
00101      47*      C              TDE  - TEMPERATURE DEADBAND FOR PRIORITY RESEQUENCE, DEC F           000000
00101      48*      C              EF1  - INPUT PRODUCT EFFICIENCY                                      000000
00101      49*      C              MP1  - MAXIMUM INPUT CHARGING RATE, KW                               000000
00101      50*      C              CP2  - WORKING FLUID HEAT CAPACITY, KWH/LB-F                         000000
00101      51*      C              TO2  - WORKING FLUID RETURN TEMPERATURE, DEG F                       000000
00101      52*      C              TM2  - MAXIMUM ALLOWABLE WORKING FLUID TEMPERATURE, DEG F            000000
00101      53*      C              R    - EFFECTIVE HEAT EXCHANGER THERMAL RESISTANCE, F/KW             000000
00101      54*      C              CM   - STORAGE DEVICE YEARLY MAINTENANCE COST, $/KW                  000000
00101      55*      C              CSA  - STORAGE DEVICE CAPACITY COST, $/KW                            000000
00101      56*      C              CSB  - STORAGE DEVICE ENERGY COST, $/KWH                             000000
00101      57*      C              LE   - UNIT/LIFE FILE EXPECTANCY, YEARS                              000000
00101      58*      C                                                                                   000000
00103      59*               COMMON/CIMPL/IMPL,ICN/CTIME/TIME /CSIMUL/DUM(7),TMAX /COST/CCI,CMI        000000
00104      60*               REAL NU,I,MP2,INT,MF,LD,ME,MFU,MFM,MP1,LE,M                               000000
00105      61*               DIMENSION HT(1)                                                           000000
00105      62*      C                                                                                   000000
00106      63*               IF(IMPL.GT.0)GO TO 100                                                    000000
00110      64*               TMAX1=TMAX*.99999                                                         000003
00111      65*               TINC= DUM(7)                                                              000006
00111      66*      C                                                                                   000006
00111      67*      C                                                                                   000006
00112      68*               IF(NU.EQ. .99999)NU=0.02                                                  000010
00114      69*               IF(TM1.EQ. .99999)TM1=212.0                                               000015
00116      70*               IF(TO1.EQ. .99999)TO1=60.0                                                000022
00120      71*               IF(PM. EQ. .99999) PM=2.0*PD                                              000027
00122      72*               IF(MFM.EQ. .99999)MFM=9000.0                                              000035
00124      73*               IF(TDE.EQ. .99999)TDE=4.0                                                 000042
00126      74*               IF(CP2.EQ. .99999)CP2=2.93E-4                                             000047
00130      75*               IF(TO2.EQ. .99999)TO2=40.0                                                000054
00132      76*               IF(TM2.EQ. .99999)TM2=212.0                                               000061
00134      77*               IF(R  .EQ. .99999)R  =3.08E-4                                             000066
00137      78*               IF(CM .EQ. .99999)CM =0.6                                                 000073
```

```
00140      79*          IF(CSA.EQ. .99999)CSA=50.0                                  000100
00142      80*          IF(CSB.EQ. .99999)CSB=15.2                                  000105
00144      81*          IF(MP1.EQ. .99999) MP1= 1.0E8                               000112
00144      82*     C                                                                000112
00146      83*          INT=0.0                                                     000117
00147      84*          RE1=0.0                                                     000120
00147      85*     C                                                                000120
00150      86*          TSU=0.0                                                     000121
00151      87*          ME =0.0                                                     000122
00152      88*          MFU=0.0                                                     000123
00153      89*          TSL=1.0E8                                                   000124
00154      90*          CM= CM+PD                                                   000126
00154      91*     C                                                                000126
00155      92*          M =PD*TSO/DH                                                000131
00156      93*          CCO=(CSA+CSB*TSO)*PD/LE                                     000135
00156      94*     C                                                                000135
00156      95*     C                    COMPUTE STORAGE TEMPERATURE                 000135
00156      96*     C                                                                000135
00157      97*       100 NH= HT(2)                                                  000144
00160      98*          T= TBLU1(E/M,HT(4),HT(4+NH),1,NH)                           000152
00161      99*          E1= M*TBLU1(TM1,HT(4+NH),HT(4),1,NH)                        000173
00161     100*     C                                                                000173
00161     101*     C                                                                000173
00161     102*     C                WORKING FLUID TEMPERATURE                       000173
00161     103*     C                                                                000173
00162     104*          TF =AMIN1(TM2,AMAX1(TO2,T-RE1*R))                           000212
00162     105*     C                                                                000212
00162     106*     C                MAXIMUM DISCHARGE RATE AND THERMAL LOAD         000212
00162     107*     C                                                                000212
00163     108*          MP2=MFM*CP2*(TF-TO2)                                        000226
00164     109*          IF(INT.EQ.1.)MP2=0.                                         000234
00166     110*          LD =AMIN1(RE1,MP2)                                          000240
00166     111*     C                                                                000240
00166     112*     C                WORKING FLUID MASS FLOW RATE                    000240
00166     113*     C                                                                000240
00167     114*          IF(LD.GT.0.0) MF =LD/CP2/(TF-TO2)                           000246
00167     115*     C                                                                000246
00171     116*          IF(IMPL.LE.1)GO TO 200                                      000255
00173     117*          IF(IMPL.GT.2) GO TO 200                                     000261
00175     118*          PM1= PM/.9999                                               000265
00175     119*     C                                                                000265
00176     120*          IF(MF .GT.MFM)WRITE(6,1010)MF,MFM                           000270
00203     121*          IF(P  .GT.PM1 )WRITE(6,1020)P ,PM                           000303
00210     122*          IF(MF.GT.MFM .OR. P.GT.PM1)ICN=ICN+1                        000316
00212     123*          IF(T  .LT.TO1.OR.                                           000337
00212     124*         1   T  .GT.TM1)WRITE(6,1030)T,TO1,TM1                        000337
00220     125*          IF(T.LT.TO1 .OR. T.GT.TM1) ICN=ICN+1                        000365
00220     126*     C                                                                000365
00220     127*     C                CURRENT CALCULATION                             000365
00220     128*     C                                                                000365
00222     129*       200 I =P*1000.0/VO                                             000407
00222     130*     C                                                                000407
00222     131*     C                ENERGY STATE                                    000407
002       132*     C                                                                000407
002       133*     C                                                                000407
002       134*          IF(IE.NE.0)DE=P-LD-NU*E                                     000412
00223     135*     C                                                                000412
```

```
00223   136*    C                    MAXIMUM CHARGING RATE REQUEST                    000412
00223   137*    C                                                                     000412
00223   138*    C                                                                     000412
00225   139*          A= AMAX1(E1-E,0.)/TINC                                          000422
00226   140*          RE =AMIN1(PM,MP1,A)/EF1                                         000432
00226   141*    C                                                                     000432
00226   142*    C                                                                     000432
00226   143*    C                    PRIORITY RESEQUENCING                            000432
00226   144*    C                                                                     000432
00227   145*          IF(T.LE.TO1)INT=1.0                                             000445
00227   146*    C                                                                     000445
00231   147*          IF(T.GE.(TO1+TDE).AND.                                          000453
00231   148*         1   INT.EQ.1.)INT=0.0                                            000453
00231   149*    C                                                                     000453
00233   150*          IF(T.GE.TM1)INT=-1.0                                            000472
00233   151*    C                                                                     000472
00235   152*          IF(T.LT.(TM1-TDE).AND.                                          000500
00235   153*         1   INT.EQ.-1.)INT=0.0                                           000500
00235   154*    C                                                                     000500
00237   155*          IF(IMPL.LE.1)RETURN                                             000517
00237   156*    C                                                                     000517
00241   157*          TSU=AMAX1(TSU,T)                                                000526
00242   158*          TSL=AMIN1(TSL,T )                                               000534
00243   159*          ME =AMAX1(ME ,E )                                               000542
00244   160*          MFU=AMAX1(MFU,MF)                                               000550
00245   161*          IF(TIME.LT.TMAX1)RETURN                                         000556
00245   162*    C                                                                     000556
00245   163*    C                    COST                                             000556
00245   164*    C                                                                     000556
00247   165*          CMI=CMI+CM                                                      000565
00250   166*          CCI=CCI+CCO                                                     000570
00251   167*          CM = CM/PD                                                      000573
00251   168*    C                                                                     000573
00252   169*          RETURN                                                          000576
00253   170*     1010 FORMAT(1HO,26HTS WORKING FLUID FLOW RATE,F12.3                  001070
00253   171*         1          ,32H   GREATER THAN MAXIMUM ALLOWED,F12.3)            001070
00254   172*     1020 FORMAT(1HO,14HTS INPUT POWER,F12.3                              001070
00254   173*         1          ,44H   GREATER THAN MAXIMUM ALLOWED CHARGE RATE,F12.3) 001070
00255   174*     1030 FORMAT(1HO, 23HTS STORAGE TEMPERATURE  ,F12.3                   001070
00255   175*         1   ,20H      OUTSIDE MINIMUM ,F12.3                            001070
00255   176*         2          ,15H   AND MAXIMUM,F12.3)                             001070
00255   177*    C                                                                     001070
00256   178*          END                                                             001070
```

7.45 TURBINE (PNEUMATIC)

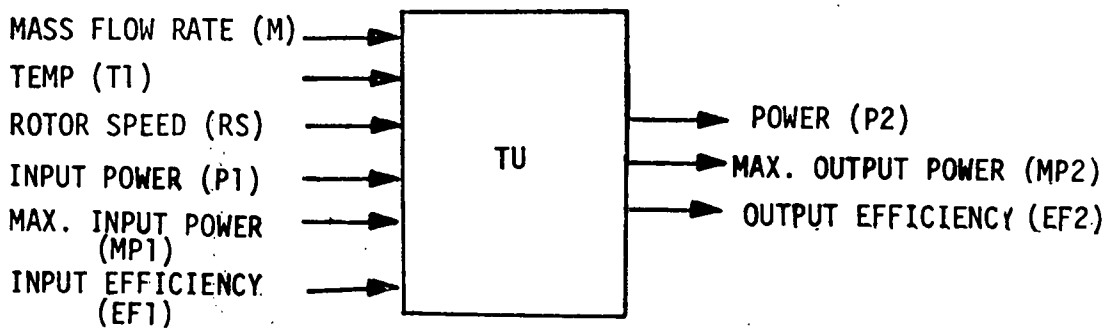

The turbine model is based on a high pressure ratio, constant angular velocity design. The turbine is assumed to be designed to a set of of operating conditions defined in terms of user specified parameters. The polytropic efficiency is only weakly related to angular velocity. Initial calculations are made with the design polytropic efficiency, and refinements are then computed after off-design parameters are calculated.

Basic Equation

The equation for output power P2 is

P2 = M*CP*(T1-TA)

TU

Inputs

Parameter/Port		Description	Units
M		Inlet mass flow rate	lb/h
CP		Air heat capacity (D = 7.2×10^{-5})	kwh/lb/°F
T	1	Input air temperature	°F
TA		Ambient air temperature	°F
MD		Design mass flow rate (D = 4800)	lb/h
TID		Design inlet air temperature (D = 600)	°F
PID		Design inlet pressure (D = 117.6)	psi
P2D		Design exit pressure (ambient) (D = 14.7)	psi
T2D		Design exit temperature (ambient) (D = 70)	°F
PS		Storage vessel pressure	psi
RS		Angular velocity	rpm
EF	1	Input product efficiency	-
MP	1	Maximum input power	kw
P	1	Input power	kw
CK		Capacity cost coefficient[1] (D = 0.015)	
FØ		Turbine mass flow exponent for capital cost (D = 0.75)	-
G		Turbine temperature exponent for capital cost (D = 0.5)	-
NPD		Design Polytropic Efficiency (D = 0.88)	

Outputs

Variable/Port			
P	2	Output power	kw
CCØ		Turbine cost/year	$
PR		Back pressure	psi
TØ		Torque	ft-lb

D - Default values supplied

[1] CK = Capital cost (known unit)/[(design point mass flow rate)^{FO}* (design point temperature + 460)^{G} * LN (inlet/outlet pressure ratio)*LE], where LE = life expectancy in years.

Outputs Cont.

Variable/Port		Description	Units
EF	2	Output product efficiency	-
MP	2	Maximum discharge power	kw

Statistics

MØP		Maximum power observed	kw

The calculation sequence and the default values are based on the assumption of a high pressure ratio, constant angular velocity turbine, rated at 150 kw and a pressure ratio of 8. The equations used relate first order effects among the various physical quantities and were derived from first principles originally in support of the research work of Reference 1. Cost scaling was also developed in that reference based on cost estimates from turbomachinery manufacturers.

1. "Closed Cycle High Temperature Control Receiver Concept for Solar Electric Power," BEC/EPRI RP377-1, June 1976.

Calculation Sequence

1) Costs

```
CC = CK*(MD)**FØ*(TID+460)**G*LN(PID/P2D)
```

2) Back Pressure PR determined by

$$PR = (M/MD)*PID*\sqrt{(T1+460)/(TID+460)}$$

If PR > PS write DIAGNOSTIC

3) Efficiency

```
RAT = (PID/P2D)**(2/7)
EFF = (RAT-1.)/(RAT**(1/NPD)-1)
```

4) Power Out

```
P2 = M*CP*(T1-TA)*EFF
```

5) Torque

If RS = 0, set TO = 0 and go to 6)

```
TØ = P2*(737.6)/(RS*2π/60)
```

6) Efficiency and maximum power

```
EF2 = EF1*EFF
MP2 = min(MP1*EFF,MD*CP*(T1-TA))
```

7) Compute Statistics and Costs

```
SUBROUTINE TU        ENTRY POINT 000335

STORAGE USED  CODE(1) 000471; DATA(0) 000065; BLANK COMMON(2) 000000

 COMMON BLOCKS

 0003   CIMPL   000002
 0004   CTIME   000001
 0005   CSTMUL  000010
 0006   COST    000001

EXTERNAL REFERENCES (BLOCK, NAME)

 0007   XPPR
 0010   ALOG
 0011   SQRT
 0012   NWDU$
 0013   NIO2$
 0014   NERR3$

STORAGE ASSIGNMENT  (BLOCK, TYPE, RELATIVE LOCATION, NAME)

 0001   000137 100L      0001   000304 1000L     0000   000004 1010F     0001   000204 200L      0001   000233 300L
 0006 R 000000 CCI       0005   000000 DUM       0000 R 000003 EFF       0003 I 000001 ICNT      0003 I 000000 IMPL
 0000   000047 INJP$     0000 R 000000 PI        0000 R 000002 RAT       0004 R 000000 TIME      0005 R 000007 TMAX
 0000 R 000001 TMAX1
```

```
00100      1*      CTU                                                                    000000
00101      2*            SUBROUTINE TU(P2,CC,PR,TO,EF2,MP2,MOP,M,CP,T1,TA,MD,TID,PID,P2D,  000000
00101      3*          1          T2D,PS,RS,EF1,MP1,P1,CK,F,G,NPD)                         000000
00101      4*      C                                                                      000000
00101      5*      C   PURPOSE    TURBINE PERFORMANCE MODEL                               000000
00101      6*      C                                                                      000000
00101      7*      C   METHOD     COMPUTE TURBINE POWER OUTPUT FROM INPUT DESIGN          000000
00101      8*      C                                                                      000000
00101      9*      C              CONDITIONS AS A FUNCTION OF INLET TEMPERATURE           000000
00101     10*      C                                                                      000000
00101     11*      C              AND MASS FLOW RATE                                      000000
00101     12*      C                                                                      000000
00101     13*      C   WRITTEN BY F.O. MAHONY                  VERSION 1, MARCH 22 1977   000000
00101     14*      C                                                                      000000
00101     15*      C   CALL SEQUENCE                                                      000000
00101     16*      C         OUTPUTS                                                      000000
00101     17*      C              P2  - OUTPUT POWER, KW                                  000000
00101     18*      C              CC  - TURBINE COST PER YEAR, $                          000000
00101     19*      C              PR  - BACK PRESSURE, PSI                                000000
001       20*      C              TO  - TORQUE, FT-LB                                     000000
```

TU

```
00101      21*      C              EF2 - OUTPUT PRODUCT EFFICIENCY                                  000000
00101      22*      C              MP2 - MAXIMUM DISCHARGE POWER, KW                                000000
00101      23*      C              MOP - MAXIMUM POWER OBSERVED,KW                                  000000
00101      24*      C          INPUTS                                                               000000
00101      25*      C              M   - INLET MASS FLOW RATE, LB/HR                                000000
00101      26*      C              CP  - AIR HEAT CAPACITY, KWH/LB/DEG F                            000000
00101      27*      C              T1  - INPUT AIR TEMPERATURE, DEG F                               000000
00101      28*      C              TA  - AMBIENT AIR TEMPERATURE, DEG F                             000000
00101      29*      C              MD  - DESIGN MASS FLOW RATE, LB/HR                               000000
00101      30*      C              TID - DESIGN INLET AIR TEMPERATURE, DEG F                        000000
00101      31*      C              PID - DESIGN INLET PRESSURE, PSI                                 000000
00101      32*      C              P2D - DESIGN EXIT PRESSURE (AMBIENT), PSI                        000000
00101      33*      C              T2D - DESIGN EXIT TEMPERATURE (AMBIENT), PSI                     000000
00101      34*      C              PS  - STORAGE VESSEL PRESSURE, PSI                               000000
00101      35*      C              RS  - ANGULAR VELOCITY, RPM                                      000000
00101      36*      C              EF1 - INPUT PRODUCT EFFICIENCY                                   000000
00101      37*      C              MP1 - MAXIMUM INPUT POWER, KW                                    000000
00101      38*      C              P1  - INPUT POWER, KW                                            000000
00101      39*      C              CK  - CAPACITY COST COEFFICIENT                                  000000
00101      40*      C              F   - TURBINE MASS FLOW EXPONENT FOR CAPITAL COST                000000
00101      41*      C              G   - TURBINE TEMPERATURE EXPONENT FOR CAPITAL COST              000000
00101      42*      C              NPD - DESIGN POLYTROPIC EFFICIENCY                               000000
00101      43*      C                                                                               000000
00103      44*           COMMON /CIMPL/IMPL,ICNT/CTIME/ TIME /CSIMUL/DUM(7),TMAX /COST/CCI          000000
00104      45*           REAL MP2,MOP, M,MD, MP1,NPD                                                000000
00105      46*           DATA PI /3.14159/                                                          000000
00105      47*      C                                                                               000000
00107      48*           IF(IMPL.GT.0) GO TO 100                                                    000000
00111      49*           IF(CP .EQ. .99999) CP = 72.0E-6                                            000002
00113      50*           IF(TA .EQ. .99999) TA = 70.0                                               000007
00115      51*           IF(MD .EQ. .99999) MD = 4800.                                              000014
00117      52*           IF(TID.EQ. .99999) TID=600.0                                               000021
00121      53*           IF(PID.EQ. .99999) PID=117.6                                               000026
00123      54*           IF(P2D.EQ. .99999) P2D=14.7                                                000033
00125      55*           IF(T2D.EQ. .99999) T2D=70.0                                                000040
00127      56*           IF(CK .EQ. .99999) CK =0.015                                               000045
00131      57*           IF(F  .EQ. .99999) F  =0.75                                                000052
00133      58*           IF(G  .EQ. .99999) G  =0.5                                                 000057
00135      59*           IF(NPD .EQ. .99999)NPD= .88                                                000064
00137      60*           MOP = 0.                                                                   000071
00140      61*           RS= AMAX1(0.0,AMIN1(RS, 4000.))                                            000072
00141      62*           TMAX1=.99999*TMAX                                                          000104
00142      63*           CC = CK*MD**F*(TID+460.)**6*ALOG(PID/P2D)                                  000107
00142      64*      C                    DETERMINE BACK PRESSURE                                    000107
00142      65*      C                                                                               000107
00143      66*       100 RAT= (PID/P2D)**.2857                                                      000137
00144      67*           EFF= (RAT-1.0)/(RAT**(1./NPD) - 1.0)                                       000146
00145      68*           PR = M/MD*PID*SQRT((T1 + 460.0)/(TID+460.))                                000162
00145      69*      C                                                                               000162
00146      70*           IF(PR.GT.PS) GO TO 1000                                                    000200
00146      71*      C                                                                               000200
00146      72*      C                    POWER OUTPUT                                               000200
00146      73*      C                                                                               000200
00146      74*      C                                                                               000200
00150      75*       200 P2= M*CP*(T1-TA)*EFF                                                       000204
00151      76*           TO = 0.                                                                    000212
00152      77*           IF(RS.EQ.0. .OR. P1.EQ. 0.) GO TO 300                                      000213
```

```
00152      78*      C                    TORQUE                                    000213
00154      79*            TO = P2*737.6/(RS*2.0*PI/60.0)                          000223
00154      80*      C                                                              000223
00154      81*      C                    EFFICIENCY AND MAXIMUM POWER              000223
00154      82*      C                                                              000223
00155      83*        300 EF2 = EF1*EFF                                            000233
00156      84*            MP2 = AMIN1(MP1*EFF ,MD*CP*(T1-TA))                      000235
00157      85*            IF(IMPL.LE. 1) RETURN                                    000251
00161      86*            MOP = AMAX1(MOP,P2)                                      000260
00162      87*            IF(TIME.LT.TMAX1) RETURN                                 000266
00164      88*            CCI = CCI + CC                                           000275
00164      89*      C                                                              000275
00165      90*            RETURN                                                   000300
00165      91*      C                                                              000300
00166      92*       1000 IF(IMPL.EQ.2)WRITE(6,1010) PR,PS                         000304
00173      93*       1010 FORMAT (1H0,21HTURBINE BACK PRESSURE,F12.3,              000315
00173      94*           1            39H   GREATER THAN STORAGE VESSEL PRESSURE ,F12.3)  000315
00174      95*            IF(IMPL.EQ.2)ICNT=ICNT+1                                 000315
00174      96*      C                                                              000315
00176      97*            GO TO 200                                                000323
00176      98*      C                                                              000323
00177      99*            END                                                      000470
```

7.46 UTILITY

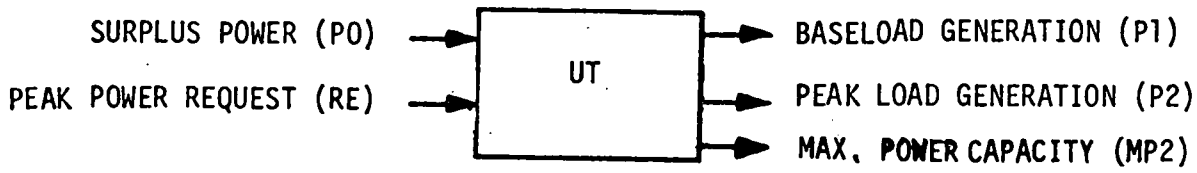

The utility model has two power outputs corresponding to baseload and peak generation, with corresponding generation cost inputs. A surplus power input is also provided with cost credit depending on whether baseload or peak power is reduced. Total energy cost, total output power and total peak load requests are monitored.

UT

Inputs

Parameter/Port		Description	Units
BS		Baseload generation (default = 0.)	kw
CB		Cost of baseload generation/kwh	$
MP	1	Maximum power capacity (default = 1×10^8)	kw
P	0	Surplus power returned to utility	kw
RE		Peak generation request	kw
CP		Cost of peak load generation/kwh	$
CC		Capital cost/year	$
CM		Maintenance cost/year	$

Outputs

Variable/Port			
P	1	Baseload generation (= BS)	kw
MP	2	Maximum power capacity (= MP1)	kw
P	2	Peak load generation	kw
CØ		Cost of energy used (state)	$

Statistics

SR	Sum of requested peak generation	kwh
SPØ	Sum of output energy	kwh
SP	Sum of surplus energy	kwh
VSP	Value of surplus energy	$

UT

Calculation Sequence

1) Power outputs

If BS > MP1, write diagnostic

P1 = BS, MP2 = MP1

P2 = MIN (MP1-BS,RE)

2) Energy cost dynamics

$$\dot{C0} = BS*CB + (P2-P0)*CX$$

$$CX = \begin{cases} CP & \text{if } P2-P0 > 0 \\ 0 & \text{if } P2-P0 < 0 \end{cases}$$

3) Statistics

SR = SR + RE * TINC

$$DEL = \begin{cases} 0 & \text{if } P2 > P0 \\ (P0-P2)*TINC & \text{if } P0 > P2 \end{cases}$$

SP0 = SP0 + (P1+P2-P0)*TINC + DEL

SP = SP + DEL

VSP = VSP + DEL * CB

Where TINC = integration step size/2

4) Compute Costs

```
SUBROUTINE UT        ENTRY POINT 000217

STORAGE USED  CODE(1) 000341; DATA(0) 000045; BLANK COMMON(2) 000000

 COMMON BLOCKS

 0003   CIMPL  000002
 0004   CTIME  000001
 0005   CSIMUL 000010
 0006   COST   000011

EXTERNAL REFERENCES (BLOCK, NAME)

 0007   NWDU$
 0010   NIO2$
 0011   NERR3$

STORAGE ASSIGNMENT  (BLOCK, TYPE, RELATIVE LOCATION, NAME)

 0001   000053 100L      0001   000146 200L      0000   000004 208F      0006 R 000000 CCI.      0006 R 000001 CMI
 0006   000002 COP       0000 R 000002 CX        0005 R 000000 DUM       0003 I 000001 ICNT      0003 I 000000 IMPL
 0000   000023 INJP$     0006 R 000010 SPD       0006 R 000004 TDE       0000 R 000003 TERM      0004 R 000000 TIME
 0000 R 000001 TINC1     0006   000005 TLD       0005 R 000007 TMAX      0000 R 000000 TMAX1     0006 R 000007 UTD
 0006 R 000006 UTV       0006 R 000003 VDE
```

```
00100      1*      CUT
00101      2*            SUBROUTINE UT(P1,MP2,P2,CO,COD,ICO,SR,SPO,SP,VSP                    000000
00101      3*          1              ,BS,CB,MP1,PO,RE,CP,CC,CM)                              000000
00101      4*      C                                                                          000000
00101      5*      C              PURPOSE   MODEL OF UTILITY CAPABLE OF PRODUCING             000000
00101      6*      C                        BASELOAD AND PEAKLOAD POWER, AND OF               000000
00101      7*      C                        ABSORBING SURPLUS POWER                           000000
00101      8*      C                                                                          000000
00101      9*      C              METHOD    COMPUTE PEAKLOAD GENERATION AND ENERGY COST       000000
00101     10*      C                                                                          000000
00101     11*      C              WRITTEN BY Y.K.CHAN      VERSION 1,JUNE 8,1977             000000
00101     12*      C                                                                          000000
00101     13*      C   CALL SEQUENCE                                                          000000
00101     14*      C         OUTPUT                                                           000000
00101     15*      C              P1  -BASELOAD GENERATION,KW                                 000000
00101     16*      C              MP2 -MAXIMUM POWER CAPACITY,KW                              000000
00101     17*      C              P2  -PEAKLOAD GENERATION,KW                                 000000
00101     18*      C              CO  -COST OF ENERGY USED (STATE), $                         000000
00101     19*      C              COD -ENERGY COST RATE, $/HR                                 000000
00101     20*      C              ICO -INTEGRATOR CONTROL FOR CO                              000000
00101     21*      C         STATISTICS                                                       000000
00101     22*      C              SR  -SUM OF REQUESTED PEAK GENERATION,KW                    000000
```


UT

```
00101   23*   C              SPO -SUM OF OUTPUT ENERGY, KWH                                  000000
00101   24*   C              SP  -SUM OF SURPLUS ENERGY, KWH                                 000000
00101   25*   C              VSP -VALUE OF SURPLUS ENERGY, $                                 000000
00101   26*   C         INPUTS                                                               000000
00101   27*   C              BS  -BASELOAD GENERATION (DEFAULT=0.),KW                        000000
00101   28*   C              CB  -COST OF BASELOAD GENERATION/KWH, $                         000000
00101   29*   C              MP1 -MAXIMUM POWER CAPACITY,KW                                  000000
00101   30*   C              PO  -SURPLUS POWER RETURNED TO UTILITY,KW                       000000
00101   31*   C              RE  -PEAK GENERATION REQUEST, KW                                000000
00101   32*   C              CP  -COST OF PEAKLOAD GENERATION/KWH, $                         000000
00101   33*   C              CC  -CAPITAL COST/YEAR, $                                       000000
00101   34*   C              CM  -MAINTENANCE COST/YEAR, $                                   000000
00101   35*   C                                                                              000000
00103   36*         COMMON /CIMPL/IMPL,ICNT/CTIME/TIME/CSIMUL/DUM(7),TMAX                    000000
00103   37*        X  /COST/CCI,CMI,COP,VDE,TDE,TLD,UTV,UTD,SPD                              000000
00104   38*         REAL MP2,MP1                                                             000000
00104   39*   C                                                                              000000
00105   40*         IF(IMPL.GT.0)GO TO 100                                                   000000
00107   41*         IF(BS.EQ..99999)BS=0.                                                    000002
00111   42*         IF(MP1.EQ..99999)MP1=1.E8                                                000006
00113   43*         TMAX1=TMAX*.99999                                                        000013
00114   44*         SR=0.                                                                    000016
00115   45*         SP=0.                                                                    000017
00116   46*         SPO=0.                                                                   000020
00117   47*         VSP=0.                                                                   000021
00120   48*         RE=0.                                                                    000022
00121   49*         PO=0.                                                                    000023
00121   50*   C                                                                              000023
00121   51*   C              COMPUTE POWER OUTPUTS                                           000023
00121   52*   C                                                                              000023
00122   53*         TINC1=DUM(7)*.5                                                          000024
00123   54*         IF(BS.LE.MP1)GO TO 100                                                   000027
00125   55*         WRITE(6,208)BS,MP1                                                       000033
00131   56*     208 FORMAT(1H0,10H BASELOAD ,F12.3,32H EXCEEDS MAXIMUM POWER CAPACITY,       000042
00131   57*        1 F12.3)                                                                  000042
00132   58*         IF(IMPL.EQ.2)ICNT=ICNT+1                                                 000042
00134   59*         BS=MP1                                                                   000050
00134   60*   C                                                                              000050
00135   61*     100 P1=BS                                                                    000053
00136   62*         MP2=MP1                                                                  000054
00137   63*         P2=AMIN1(MP1-BS,RE)                                                      000056
00137   64*   C                                                                              000056
00137   65*   C              COMPUTE ENERGY COST                                             000056
00137   66*   C                                                                              000056
00140   67*         CX=0.                                                                    000064
00141   68*         IF(P2.GT.PO)CX=CP                                                        000065
00143   69*         IF(ICO.NE.0)COD=BS*CB+(P2-PO)*CX                                         000073
00145   70*         IF(IMPL.LE.1)RETURN                                                      000104
00145   71*   C                                                                              000104
00145   72*   C              STATISTICS                                                      000104
00145   73*   C                                                                              000104
00147   74*         SR=SR+RE*TINC1                                                           000113
00150   75*         SPO=SPO+ (P1+P2-PO)*TINC1                                                000117
00151   76*         IF(P2.GT.PO) GO TO 200                                                   000125
00153   77*         TERM=(PO-P2)*TINC1                                                       000131
00154   78*         SPO= SPO+TERM                                                            000135
00155   79*         SP= SP+ TERM                                                             000137
```

BCS 40180-2

```
00156      80*          VSP= VSP+ CB*TERM                                  000141
00157      81*                                                             000146
00157      82*     C                                                       000146
00157      83*       200 IF(TIME.LT.TMAX1)RETURN                           000146
00161      84*           CCI=CCI+CC                                        000154
00162      85*           CMI=CMI+CM                                        000157
00163      86*           VDE=VDE-CO+VSP                                    000162
00164      87*           TDE=TDE-SPO+SP                                    000166
00165      88*           UTV=UTV+CO                                        000172
00166      89*           UTD=UTD+SPO                                       000175
00167      90*           SPD= SPD+SP                                       000200
00170      91*           RETURN                                            000203
00171      92*           END                                               000340
```

7.47 WIND

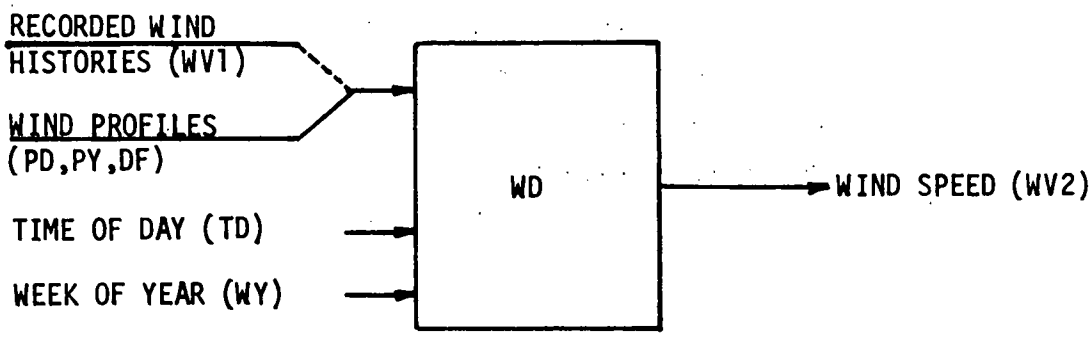

This model computes wind speed either from user supplied time histories (data tape) or by generating a set of random numbers with user supplied daily and yearly average profiles and user specified random variation. If user supplied profiles are available then the wind speeds are generated from the following equation:

Basic Equation

$$WV = [PD(TD) + N(T)]*PY(WY)/M$$

where PD is the user supplied daily mean profile
TD is the time of the day
PY is the user supplied yearly profile
WY is the week of the year
N is white noise with user specified probability distribution

$$M = \frac{1}{J} \sum_{i=1}^{J} PY(i)$$

WD

Tables		Description	Units
PD		Daily profile versus TD (default = 0)	miles/hr
PY		Yearly profile versus WY	arbitrary
DF		Density function for white noise terms (tabular with speed WV)	arbitrary

Inputs

Parameter/Port			
WV	1	Wind speed data file input	miles/hr
TD		Time of day	hr
WY		Week of the year	-

Outputs

Variable/Port			
WV	2	Wind speed	miles/hr
M		Mean of yearly profile	
TIM		Last time a random sample was generated	hr

Statistics

MV	Maximum speed	miles/hr
AV	Average speed (expected daily wind)	miles/hr

Calculation Sequence

1) Compute distribution function and mean M (first pass only)

$$F(WV) = \frac{(\sum DF(V_i) : V_i \leq WV)}{\sum DF(V_i)}$$

2) Check for data file input

If WV1 = .99999 go to 3)

WV2 = WV1

Go to 5)

3) Generate white noise input N

If TIME = TIM go to 5)

U = random noise sample, uniformly distributed [0,1]

Interpolate to find $N = F^{-1}(U)$

TIM = TIME

4) Compute wind speed

WV2 = [PD(TD) + N]* PY(WY)/M

5) Compute Statistics

```
SUBROUTINE WD        ENTRY POINT 000412

STORAGE USED  CODE(1) 000473; DATA(0) 000063; BLANK COMMON(2) 000000

 COMMON BLOCKS

 0003   CIMPL  000001
 0004   CTIME  000001

EXTERNAL REFERENCES (BLOCK, NAME)

 0005   UNTF
 0006   TBLU1
 0007   NERR3$

STORAGE ASSIGNMENT  (BLOCK, TYPE, RELATIVE LOCATION, NAME)

 0001   000245 10L      0001   000253 100L     0001   000074 122G     0001   000133 137G     0001   000353 150L
 0001   000202 155G     0001   000225 165G     0001   000146 40L      0000 R 000010 A        0000 R 000005 AMN
 0000 R 000014 DWV      0000 I 000006 I        0003 I 000000 IMPL     0000   000024 INJP$    0000 I 000000 IX
 0000 I 000007 L        0000 I 000002 ND       0000 I 000001 NP       0000 I 000012 NP1      0000 I 000003 NY
 0000 R 000004 SUM      0006 R 000000 TRLU1    0004 R 000000 TIME     0000 R 000011 U        0000 R 000013 WN
 0000 R 000015 YWV
```

```
00100      1*      CWD                                                                    000016
00101      2*            SUBROUTINE WD (PD,PY,WF,WVO,AMV,AV,XM,TIMO ,WVI,TD,WY)           000016
00101      3*      C                                                                      000016
00101      4*      C   PURPOSE    GENERATE WIND SPEED FROM DAILY, YEARLY, AND RANDOM PROFILE DATA  000016
00101      5*      C                                                                      000016
00101      6*      C   METHOD     RANDOM NOISE WITH SPECIFIED DIST. IS ADDED TO MEAN DAILY PROFILE  000016
00101      7*      C              AND MULTIPLIED BY A YEARLY PROFILE. INITIALLY THE DENSITY TABLE  000016
00101      8*      C              WF IS CONVERTED TO A DIST. FUNCTION.                    000016
00101      9*      C                                                                      000016
00101      10*     C   WRITTEN BY A.W. WARREN                          VERSION 1, MARCH 4 1977  000016
00101      11*     C                                                                      000016
00101      12*     C   CALL SEQUENCE                                                      000016
00101      13*     C         TABLES                                                       000016
00101      14*     C              PD  - MEAN DAILY WIND PROFILE, MPH                      000016
00101      15*     C              PY  - MEAN YEARLY WIND PROFILE                          000016
00101      16*     C              WF  - WIND FREQUENCY FUNCTION (NON-GUST, RANDOM COMPONENT), HR  000016
00101      17*     C                                                                      000016
00101      18*     C         OUTPUTS                                                      000016
00101      19*     C              WVO - WIND VELOCITY OUTPUT, MPH                         000016
00101      20*     C              AMV - MAX. OBSERVED WIND SPEED, MPH                     000016
00101      21*     C              AV  - MEAN DAILY WIND SPEED, MPH                        000016
00101      22*     C              XM  - MEAN YEARLY WIND, -                               000016
00101      23*     C              TIMO- LAST TIME A RANDOM SAMPLE WAS USED, HR            000016
```


WD

```
00101      24*      C                                                                    000016
00101      25*      C          INPUTS                                                    000016
00101      26*      C               WVI - WIND VELOCITY INPUT FROM DATA FILE, MPH        000016
00101      27*      C               TD  - TIME OF DAY, HR                                000016
00101      28*      C               WY  - WEEK OF YEAR (1-52)                            000016
00101      29*      C                                                                    000016
00101      30*      C                                                                    000016
00103      31*           DIMENSION PD(1),PY(1),WF(1)                                     000016
00104      32*           COMMON/CIMPL/IMPL /CTIME/TIME                                   000016
00105      33*           DATA IX/1/                                                      000016
00105      34*      C                         INITIALIZATION                             000016
00105      35*      C                         COMPUTE MEAN DAILY WIND SPEED AND DIST. FCN 000016
00105      36*      C                                                                    000016
00107      37*           NP=WF(2)                                                        000016
00110      38*           ND=PD(2)                                                        000025
00111      39*           NY=PY(2)                                                        000034
00112      40*           IF(IMPL.GT.0) GO TO 10                                          000043
00114      41*           SUM=0.0                                                         000046
00115      42*           AMN=0.0                                                         000047
00116      43*           TIMO=-1.                                                        000050
00117      44*           IF(WF(4+2*NP).EQ. 1.) GO TO 40                                  000052
00121      45*           DO 20 I=1,NP                                                    000074
00124      46*           WF(I+2) = WF(I+3)                                               000074
00125      47*           L = 3+NP+I                                                      000076
00126      48*           A=WF(L)                                                         000101
00127      49*           WF(L)=SUM                                                       000105
00130      50*           SUM=SUM+ A                                                      000107
00131      51*        20 AMN = AMN + A*WF(2+I)                                           000111
00133      52*           AMN = AMN/SUM                                                   000116
00134      53*           WF(3+NP)= WF(NP+2)*2. - WF(NP+1)                                000120
00135      54*           WF(L+1)= 1.                                                     000124
00135      55*      C                                                                    000124
00136      56*           DO 30 I=1,NP                                                    000133
00141      57*           L=3+NP+I                                                        000133
00142      58*        30 WF(L) = WF(L)/SUM                                               000140
00144      59*        40 CONTINUE                                                        000146
00144      60*      C                         DEFAULT TABLE FOR PD                       000146
00144      61*      C                                                                    000146
00145      62*           IF(PD(2).EQ. 1.99999) PD(4)=0.                                  000146
00147      63*           IF(PD(2).EQ. 1.99999) PD(5)=0.                                  000151
00151      64*           IF(PD(2).EQ. 1.99999) PD(2)=1.                                  000171
00151      65*      C                                                                    000171
00153      66*           AV = 0.                                                         000176
00154      67*           DO 25 I=1,ND                                                    000202
00157      68*           L = 3+ND+I                                                      000202
00160      69*        25 AV = AV+PD(L)                                                   000205
00162      70*           AV = AV/ND + AMN                                                000214
00162      71*      C                                                                    000214
00163      72*           XM=0.                                                           000221
00164      73*           DO 15 I=1,NY                                                    000225
00167      74*           L=3+NY+I                                                        000225
00170      75*        15 XM=XM+PY(L)                                                     000232
00172      76*           XM=XM/NY                                                        000237
00173      77*           AMV =0.                                                         000243
00173      78*      C                         CHECK FOR DATA FILE INPUT                  000243
00173      79*      C                                                                    000243
00174      80*        10 IF( WVI.EQ. .99999) GO TO 100                                   000245
```

```
00176      81*          WVO = WVI                                                    000247
00177      82*          GO TO 150                                                    000251
00177      83*    C                        GENERATE WHITE NOISE WITH DIST. WF       000251
00177      84*    C                                                                 000251
00200      85*      100 IF(  TIME.EQ.TIMO) GO TO 150                                000253
00202      86*          CALL UNIF(U,IX)                                              000255
00203      87*          NP1=NP+1                                                     000261
00204      88*          WN = TBLU1(U,WF(4+NP),WF(3),1,-NP1)                          000264
00204      89*    C                                                                 000264
00204      90*    C                        GENERATE WIND SPEED USING DAILY AND YEARLY PROFILES 000264
00205      91*          DWV = TBLU1(TD,PD(4),PD(4+ND),1,-ND)                         000303
00206      92*          YWV = TBLU1(WY,PY(4),PY(4+NY),1,-NY)                         000323
00207      93*          WVO = (DWV + WN)* YWV / XM                                   000343
00210      94*          TIMO=TIME                                                    000350
00210      95*    C                                                                 000350
00210      96*    C                        MAX. OBSERVED WIND SPEED                 000350
00211      97*      150 IF(IMPL.LE.1) RETURN                                         000353
00213      98*          AMV = AMAX1(AMV,WVO)                                         000361
00214      99*          RETURN                                                       000367
00215     100*          END                                                          000472
```

7.48 TURBINE/GENERATOR

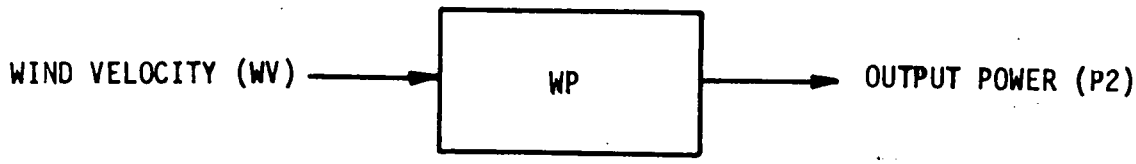

This component uses a power curve relationship with wind velocity to model the wind turbine and generator. It may be used in place of the more detailed wind turbine-transmission-generator components where a simplified analysis is desirable, or where a nonstandard wind generator model is desired. The model may be used for either A.C. or D.C. power generation.

Basic Equations

$$P2 = I = 0 \quad \begin{cases} WV < WVO \\ WV > WV1 \end{cases}$$

$$P2 = V*I/1000 \quad WVO \leq WV \leq WV1$$

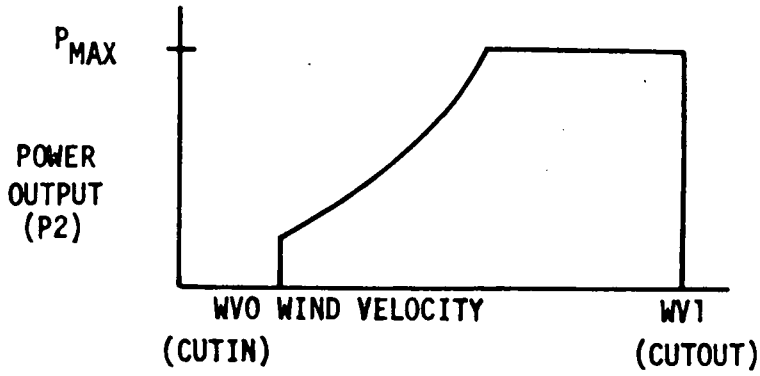

FIGURE 7.48: OUTPUT POWER VERSUS WIND VELOCITY

Tables	Description	Units
PW	Wind generation power versus wind velocity [1]	kw

Inputs

Parameter/Port		
V	Bus voltage (Rated)	volts
WVO	Power cutin velocity	mph
WV1	Power cutout velocity	mph
WV	Wind velocity	mph
CC	Capital cost/year	$
CM	Maintenance cost/year	$
EC	Control Energy Rate	$/hr

Outputs

Variable/Port		
I	Bus current	amps
P 2	Real power output	kw

Statistics

MI	Maximum current	amps
MPØ	Maximum power	kw
SP	Total output energy	kwh
CØ	Total operating costs	$

[1] Output power including mechanical and electrical efficiencies

WP

Calculation Sequence

1) Initialize statistics

2) Compute P2 and I

$$P2 = \begin{pmatrix} PW(WV) & WV0 \leq WV \leq WV1 \\ 0 & \text{otherwise} \end{pmatrix}$$

$$I = P2*1000/V$$

3) Compute Statistics and Costs

```
SUBROUTINE WP        ENTRY POINT 000153

STORAGE USED  CODE(1) 000232; DATA(0) 000024; BLANK COMMON(2) 000000

 COMMON BLOCKS

 0003   CIMPL  000001
 0004   COST   000003
 0005   CTIME  000001
 0006   CSIMUL 000010

EXTERNAL REFERENCES (BLOCK, NAME)

 0007   TBLU1
 0010   NERR3$

STORAGE ASSIGNMENT  (BLOCK, TYPE, RELATIVE LOCATION, NAME)

 0001   000046 10L       0001   000064 20L       0004 R 000000 CC        0004 R 000001 CM        0004 R 000002 COP
 0006   000000 DUM       0003 I 000000 IMPL      0000   000006 INJPS     0000 I 000000 N         0007 R 000000 TBLU1
 0005 R 000000 TIME      0006 R 000006 TINC      0006 R 000007 TMAX      0000 R 000001 TMAX1
```

```
00100      1*      CWP                                                                    000000
00101      2*            SUBROUTINE WP ( PW,BI,PO,AMI,AMP,SP,CO,VO,WVO,WV1,WV,CCI,CMI,EC)  000000
00101      3*      C                                                                      000000
00101      4*      C   PURPOSE    MODEL THE WIND TURBINE AND GENERATOR USING A POWER CURVE 000000
00101      5*      C                                                                      000000
00101      6*      C   WRITTEN BY A.W. WARREN                          VERSION 1, MARCH 3 1977 000000
00101      7*      C                                                                      000000
00101      8*      C   CALL SEQUENCE                                                      000000
00101      9*      C          TABLES                                                      000000
00101     10*      C               PW  - WIND GENERATION POWER IN KW VERSUS WIND VELOCITY IN MPH 000000
00101     11*      C                                                                      000000
00101     12*      C          OUTPUTS                                                     000000
00101     13*      C               BI  - OUTPUT BUS CURRENT, AMPS                         000000
00101     14*      C               PO  - POWER OUTPUT, KW                                 000000
00101     15*      C               AMI - MAX. OBSERVED CURRENT, AMPS                      000000
00101     16*      C               AMP - MAX. OBSERVED POWER, KW                          000000
00101     17*      C               SP  - TOTAL OUTPUT ENERGY,KWH                          000000
00101     18*      C               CO  - OPERATING COST, $                                000000
00101     19*      C                                                                      000000
00101     20*      C          INPUTS                                                      000000
00101     21*      C               VO  - RATED BUS VOLTAGE, VOLTS                         000000
00101     22*      C               WVO - POWER CUTIN VELOCITY, MPH                        000000
00        23*      C               WV1 - POWER CUTOUT VELOCITY, MPH                       000000
00        24*      C               WV  - WIND VELOCITY, MPH                               000000
00        25*      C               CCI - CAPITOL COST / YEAR, $                           000000
```

WP

```
00101   26*   C              CMI - MAINTENANCE COST / YEAR, $                                  000000
00101   27*   C              EC  - CONTROL ENERGY RATE, $/HR                                   000000
00101   28*   C                                                                                000000
00103   29*         DIMENSION PW(1)                                                             000000
00104   30*         COMMON / CIMPL / IMPL                                                       000000
00105   31*         COMMON/COST/ CC,CM,COP /CTIME/ TIME /CSIMUL/ DUM(6),TINC,TMAX               000000
00105   32*   C                                                                                000000
00105   33*   C                          POWER OUTPUT CALCULATIONS                             000000
00105   34*   C                                                                                000000
00106   35*         PO = 0.                                                                     000000
00107   36*         IF(WV.LT.WV0 .OR. WV.GT.WV1) GO TO 10                                       000001
00111   37*         N = PW(2)                                                                   000017
00112   38*         PO = TBLU1(WV,PW(4),PW(4+N),1,-N)                                           000026
00113   39*      10 BI = PO*1000/VO                                                             000046
00113   40*   C                          STATISTICS                                            000046
00113   41*   C                                                                                000046
00114   42*         IF(IMPL.GT.0) GO TO 20                                                      000051
00116   43*         CO= 0.                                                                      000054
00117   44*         AMI = 0.                                                                    000055
00120   45*         AMP = 0.                                                                    000056
00121   46*         SP = 0.                                                                     000057
00122   47*         TMAX1=TMAX*.99999                                                           000060
00123   48*      20 IF(IMPL.LE.1) RETURN                                                        000064
00125   49*         AMI = AMAX1(AMI,BI)                                                         000072
00126   50*         AMP = AMAX1(AMP,PO)                                                         000100
00127   51*         SP = SP + PO*.5*TINC                                                        000106
00130   52*         CO= CO + EC*.5*TINC                                                         000113
00130   53*   C                          COST SUMMATION                                        000113
00131   54*         IF( TIME.LT.TMAX1) RETURN                                                   000120
00133   55*         CC = CC + CCI                                                               000127
00134   56*         CM = CM + CMI                                                               000132
00135   57*         COP= COP + CO                                                               000135
00136   58*         RETURN                                                                      000140
00137   59*         END                                                                         000231
```

7.49 WIND TURBINE

This component models the wind turbine in terms of physical properties such as blade radius, power coefficient, and design tip speed ratio.[1] The step-up gear ratio is computed based on design rotor speed.

Basic Equations

Output power is given by

$$P2 = CP*1/2*AD*A*(WV*C)^3*k$$

where:

CP = effective power coefficient (tabular with WV)

A = $\pi*(BR)^2$

C = 1.4667 (mph to ft/sec. conversion)

k = 1.3558×10^{-3} (ft-lb to kw-sec. conversion)

---

1 NASA CR 134937 "Design Study of Wind Turbines - 50kw to 3000 kw - For Electric Utility Applications", Kaman Aerospace Corporation, February 1976.

WT

Inputs

Parameter/Port	Description	Units
WV	Wind speed	mph
VØ	Mean wind speed (yearly)	mph
VR	Rated wind speed (default = 1.35 x VO)	mph
RS	Rotor speed	rpm
RSG	Generator shaft speed (design)(default = 1800)	rpm
BR	Blade radius	ft
EC	Cost to operate controls	$/h
AD	Air density (default = 0.0023)	slugs/ft^3
LAM[1]	Design tip speed ratio (default = 9.4)	-
CPM[2]	Maximum power coefficient at VO (default = 0.4)	-
CP	Effective power coefficient (default table versus VO/WV)	-
CC	Capital cost/year	$
CM	Maintenance cost/year	$

Outputs

Variable/Port		Description	Units
P	2	Output mechanical power	kw
TØ		Mechanical torque	ft-lb
CØ		Total operating cost	$
GR		Step-up gear ratio	-
RAP		Rated output power	kw

Statistics

MT	Maximum torque	ft-lb
MPØ	Maximum power	kw
SP	Total energy delivered	kwh

---

1 LAM may be computed using the design equation:

LAM = SQRT(8/(3* solidity constant * design lift coefficient))

2 If default CP table not used then set CPM = CP(rated wind speed)

Calculation Sequence

1) First pass - Compute Gear Ratio and Rated Power

$$RS = (LAM*V\emptyset*C/BR)*(60/2\pi)$$

$$GR = RSG/RS$$

$$RAP = .5*CP1*AD*A*(VR*C)^3$$

where

$$CP1 = \begin{cases} CPM*F(V\emptyset/VR) & \text{if CP default used} \\ CPM & \text{otherwise} \end{cases}$$

2) Compute power coefficient CP

If WV = 0 set P2=TØ=0 and go to 4)

If CP default used, then

$$CP = CPM*F(V\emptyset/WV)$$

where F is shown in Figure 7.49

3) Power and torque

$$A = \pi*BR^2$$

$$P = .5*CP*AD*A*(WV*C)^3 \qquad (C = 1.4667)$$

$$TO = P/(RS*2\pi/60)$$

$$P2 = P*k \qquad (k = 1.3558 \times 10^{-3})$$

4) Compute Statistics and Costs

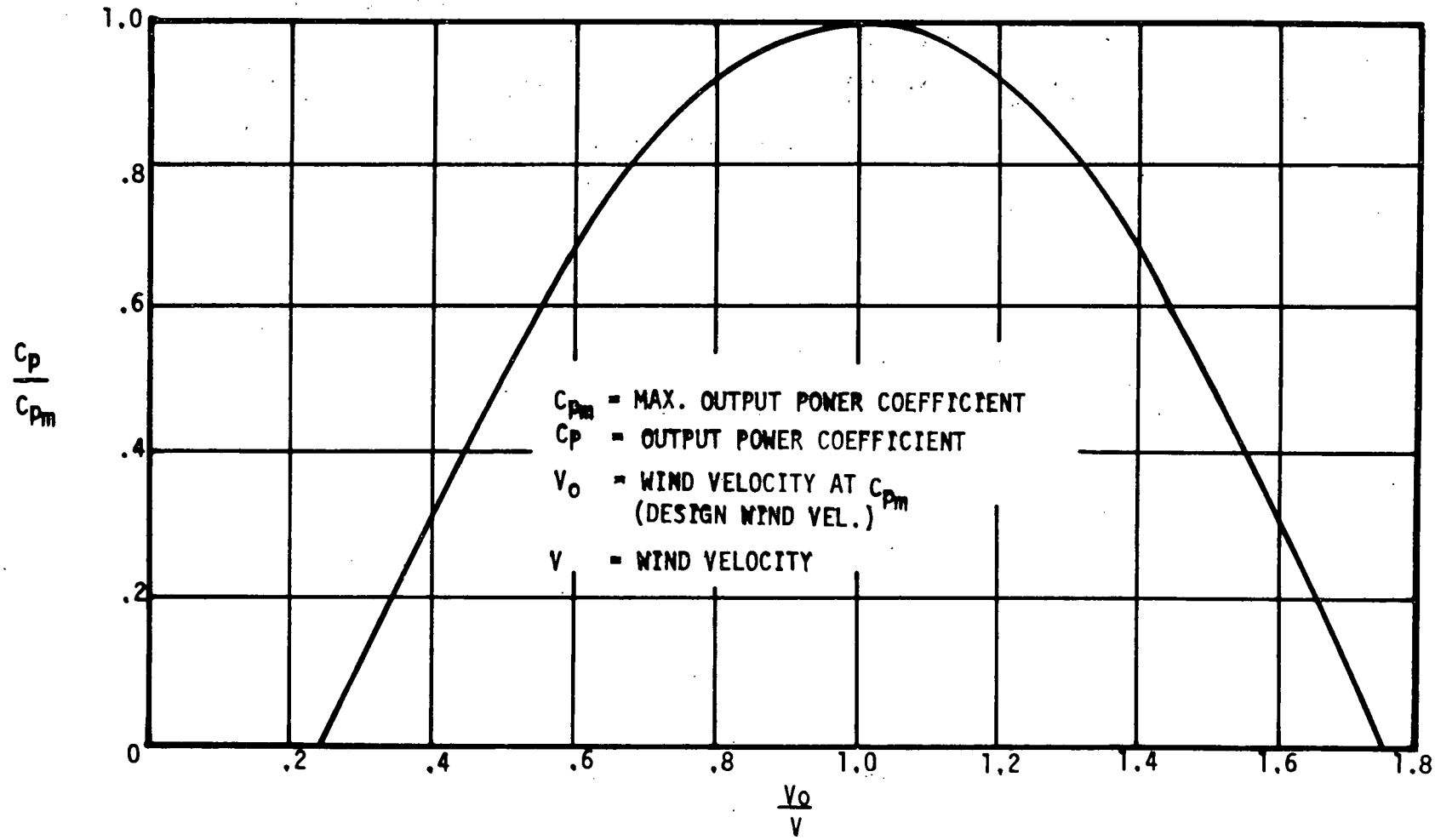

FIGURE 7.49 GENERALIZED MACHINE POWER OUTPUT PERFORMANCE

```
SUBROUTINE WT        ENTRY POINT 000274

STORAGE USED  CODE(1) 000413; DATA(0) 000070; BLANK COMMON(2) 000000

 COMMON BLOCKS

 0003   C1MPL   000001
 0004   CTIME   000001
 0005   CSIMUL  000010
 0006   COST    000003

EXTERNAL REFERENCES (BLOCK, NAME)

 0007   TBLU1
 0010   NERR3$

STORAGE ASSIGNMENT  (BLOCK, TYPE, RELATIVE LOCATION, NAME)

 0001   000122 100L      0001   000211 200L      0000 R 000034 A         0006 R 000000 CCI       0006 R 000001 CMI
 0006 R 000002 COI       0000 R 000033 CP1       0000 R 000026 C1        0000 R 000027 C2        0005   000000 DUM
 0000 R 000000 F         0003 I 000000 IMPL      0000   000051 INJPS     0000 R 000035 P         0000 R 000030 PI
 0007 R 000000 TPLU1     0004 R 000000 TIME      0005 R 000006 TINC      0000 R 000032 TINC2     0005 R 000007 TMAX
 0000 R 000031 TMAX1
```

```
00100      1*     CWT1                                                                    000000
00101      2*          SUBROUTINE WT (P2,TO,CO,GR,RAP,MT,MPO,SP,WV,VO,VR,RS, RSG,BR,EC,   000000
00101      3*        1                AD,LAM,CPM, CP,CC,CM)                                000000
00101      4*     C                                                                       000000
00101      5*     C   PURPOSE    MODEL WIND TURBINE POWER OUTPUT                          000000
00101      6*     C                                                                       000000
00101      7*     C   METHOD     COMPUTE POWER COEFFICIENT AND ROTOR SPEED FROM PHYSICAL  000000
00101      8*     C              DESIGN PARAMETERS.  RATED POWER COEFF. IS 3/4 OF CPM.    000000
00101      9*     C                                                                       000000
00101     10*     C   WRITTEN BY A. W. WARREN                      VERSION 2, APRIL 6 1977 000000
00101     11*     C                                                                       000000
00101     12*     C   CALL SEQUENCE                                                       000000
00101     13*     C         OUTPUTS                                                       000000
00101     14*     C              P2  - OUTPUT MECHANICAL POWER, KW                        000000
00101     15*     C              TO  - OUTPUT MECHANICAL TORQUE, FT-LB                    000000
00101     16*     C              CO  - OPERATING COST SUM, %                              000000
00101     17*     C              GR  - TURBINE/GENERATOR  GEAR RATIO                      000000
00101     18*     C              RAP - RATED OUTPUT POWER, KW                             000000
00101     19*     C              MT  - MAXIMUM TORQUE STATISTIC, FT-LB                    000000
00101     20*     C              MPO - MAXIMUM POWER STATISTIC, KW                        000000
00101     21*     C              SP  - TOTAL OUTPUT ENERGY DELIVERED, KWH                 000000
00101     22*     C                                                                       000000
00101     23*     C         INPUTS                                                        000000
```


WT

```
00101   24*   C              WV  - WIND SPEED  MPH                                  000000
00101   25*   C              VO  - MEAN WIND SPEED (YEARLY), MPH                    000000
00101   26*   C              VR  - RATED WIND SPEED, MPH                            000000
00101   27*   C              RS  - ROTOR SPEED, RPM                                 000000
00101   28*   C              RSG - GENERATOR SHAFT SPEED, RPM                       000000
00101   29*   C              BR  - BLADE RADIUS, FT                                 000000
00101   30*   C              EC  - CONTROL ENERGY RATE, $/HR                        000000
00101   31*   C              AD  - AIR DENSITY, SLUGS/FT**3                         000000
00101   32*   C              LAM - DESIGN TIP SPEED RATIO                           000000
00101   33*   C              CPM - MAXIMUM POWER COEFFICIENT AT VO                  000000
00101   34*   C              CP  - EFFECTIVE POWER COEFFICIENT AT WV                000000
00101   35*   C              CC  - CAPITAL COST PER YEAR                            000000
00101   36*   C              CM  - MAINTENANCE COST PER YEAR                        000000
00101   37*   C                                                                     000000
00103   38*          COMMON /CIMPL/IMPL /CTIME/ TIME /CSIMUL/ DUM(6),TINC,TMAX      000000
00104   39*          COMMON /COST/ CCI,CMI,COI                                      000000
00105   40*          REAL MT,MPO,LAM                                                000000
00106   41*          DIMENSION F(22)                                                000000
00107   42*          DATA F/.24,.4,.6,.68,.8,1.,1.2,1.31,1.4,1.6,1.74,0.,.31,.68,.8, 000000
00107   43*        1     .92,1.,.92,.8,.68,.3,0. /,C1,C2,PI/1.4667,.0013558,3.14159 000000
00107   44*   C                                                                     000000
00107   45*   C                          INITIALIZATION                             000000
00107   46*   C                                                                     000000
00114   47*          IF(IMPL.GT.0) GO TO 100                                        000000
00116   48*          TMAX1 = TMAX* .99999                                           000002
00117   49*          TINC2 = .5* TINC                                               000005
00117   50*   C                                                                     000005
00120   51*          IF( VR .EQ. .99999) VR = 1.35* VO                              000010
00122   52*          IF(RSG .EQ. .99999) RSG= 1800.                                 000016
00124   53*          IF( AD .EQ. .99999) AD = .0023                                 000026
00126   54*          IF(LAM .EQ. .99999) LAM= 9.4                                   000033
00130   55*          IF(CPM .EQ. .99999) CPM= 0.4                                   000040
00130   56*   C                                                                     000040
00132   57*          RS = C1*LAM*VO/BR*(30./PI)                                     000045
00133   58*          GR = RSG /RS                                                   000055
00134   59*          CP1= CPM                                                       000060
00135   60*          IF(CP.EQ. .99999) CP1= CPM*TBLU1(VO/VR,F(1),F(12),1,-11)       000062
00137   61*          RAP= .5*CP1*AD*PI*BR*BR*(VR*C1)**3*C2                          000101
00140   62*          CO = 0.0                                                       000115
00141   63*          SP = 0.0                                                       000116
00142   64*          MPO= 0.0                                                       000117
00143   65*          MT = 0.0                                                       000120
00143   66*   C                                                                     000120
00143   67*   C                          POWER COEFFICIENT CALCULATION              000120
00143   68*   C                                                                     000120
00144   69*      100 P2 = 0.0                                                       000122
00145   70*          TO = 0.0                                                       000122
00146   71*          IF( WV.EQ. 0.) GO TO 200                                       000123
00150   72*          CP1 = CP                                                       000125
00151   73*          IF( CP1.EQ. .99999) CP1 = CPM*TBLU1(VO/WV,F(1),F(12),1,-11)    000127
00153   74*          IF(CP1.EQ. 0.) GO TO 200                                       000151
00153   75*   C                                                                     000151
00153   76*   C                          OUTPUT POWER AND TORQUE                    000151
00153   77*   C                                                                     000151
00155   78*          A = PI*BR**2                                                   000153
00156   79*          P = .5*CP1*AD*A*(WV*C1)**3                                     000157
00157   80*          IF(WV.GT.VR)P= RAP/C2                                          000170
```

```
00161      81*          TO=P/(RS*PI/30.)                                  000177
00162      82*          P2 = P*C2                                         000205
00162      83*     C                                                      000205
00162      84*     C                    STATISTICS AND COSTS              000205
00162      85*     C                                                      000205
00163      86*       200 IF(IMPL.LE.1) RETURN                             000211
00163      87*     C                                                      000211
00165      88*          CO = CO + EC*TINC2                                000217
00166      89*          MT = AMAX1( MT,TO)                                000223
00167      90*          MPO= AMAX1(MPO,P2)                                000231
00170      91*          SP = SP + P2*TINC2                                000237
00170      92*     C                                                      000237
00171      93*          IF(TIME.LT.TMAX1)RETURN                           000243
00173      94*          CCI = CCI + CC                                    000252
00174      95*          CMI = CMI + CM                                    000255
00175      96*          COI = COI + CO                                    000260
00175      97*     C                                                      000260
00176      98*          RETURN                                            000263
00177      99*          END                                               000412
```

8.0 EXAMPLES

This section gives five simple example simulations using the SIMWEST program. These examples exercise all physical components of the SIMWEST library and many of the model features such as Fortran code insertion and the file read capability. Each example contains the input data for model generation and analysis, selected printer output generated by the programs and a discussion of the results obtained. It is recommended that a user work through and understand the model connections for these examples before attempting to build more complex models such as that of Figure 1-7.

8.1 WIND TURBINE AND FILE READ MODEL

Figure 8.1-1 shows a simplified schematic of the wind turbine and file read model. In this example a wind turbine is used to feed power directly to a load. Wind and load time histories are read from a mass storage file and then used to drive the simulation. A histogram for power output is also included. Figure 8.1-2 shows the input data to build the model and print out some of the load file data. The order of the component definitions is such that information passes down the list, i.e. no component is defined before components in the INPUTS list. This assures that the component subroutines in the Fortran model will be called in the right order. The first Fortran statement is inserted in the model prior to the Fortran which sets up the iteration loop, while the second set of Fortran statements is within the loop and writes out the load file data from array TEMP the first pass through the model. Figure 8.1-3 shows the model schematic generated. In addition to showing the component connections, the names of the input connections are printed out. Notice that information passes not only from WT to GR but also vice-versa. The input RSIGR to WT is a feedback variable and so is the input RS GE to GR. It is the presence of the feedback variables which require several iterations to attain steady state.

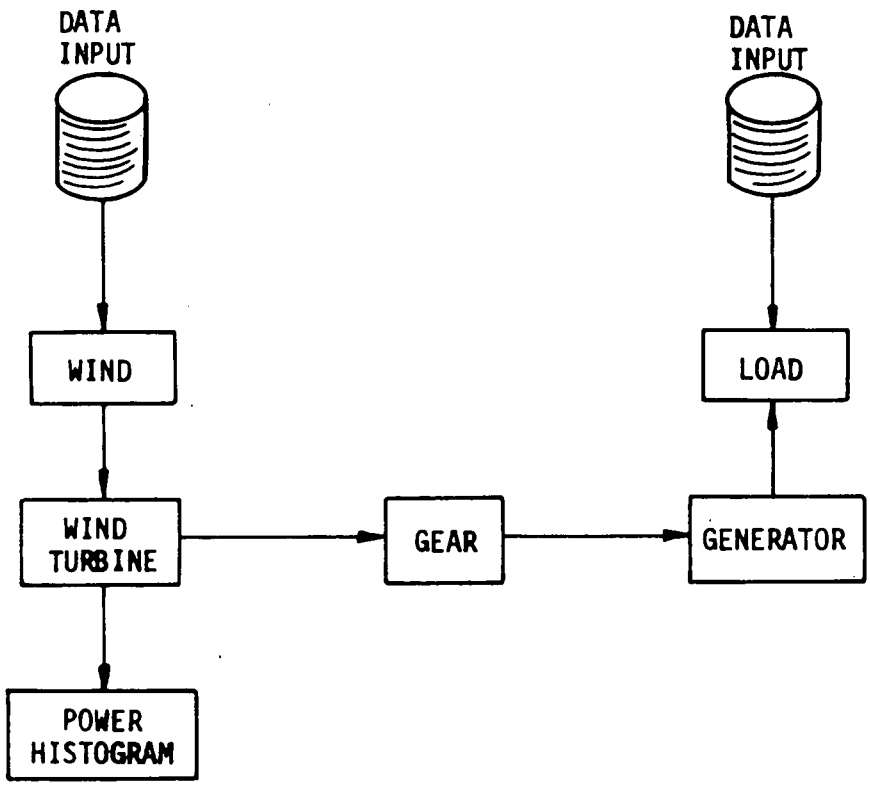

FIGURE 8.1-1: WIND TURBINE AND FILE READ EXAMPLE

```
MODEL DESCRIPTION       TAPE READ TEST
      FORTRAN STATEMENTS
      COMMON /DATARD/ TEMP(448)
LOCATION=15      TI
LOCATION=3       TAW      INPUTS=TI
LOCATION=11      WD       INPUTS=TI,TAW(VAR=WV)
LOCATION=31      WT       INPUTS=WD
LOCATION=35      GR       INPUTS=WT
LOCATION=51      HG       INPUTS=WT(P =FIN)
LOCATION=39      GE       INPUTS=GR
LOCATION= 7      TAL      INPUTS=TI
LOCATION=19      LO       INPUTS=GE,TI,TAL(VAR=LO)
      FORTRAN STATEMENTS
      IF(IMPL.GT.0) GO TO 2
      WRITE (6,100) (TEMP(I),I=1,448)
  100 FORMAT(1H ,12F10.3)
    2 CONTINUE
END OF MODEL
LIST STANDARD COMPONENTS
PRINT
```

FIGURE 8.1-2 INPUT DATA FOR FILE READ MODEL

The input data for several simulations using this model is shown in Figure 8.1-4. The component parameter values are first specified, those inputs not specified taking default values. A number of tables are then specified. The WD and LO tables are not really needed here. The wind and load file data was originally generated from an earlier run using these tables. Following the tables are the printer plot input commands, and the simulation values and print commands for a one week run. The parameter values for a second simulation which reads to the end of the file are then given. The last simulation attempts to read past the end of file.

Some of the output for the first simulation are shown in Figures 8.1-5 to 8.1-8. Figure 8.1-5 shows the output resulting from the FORTRAN STATEMENTS code. This data is formatted to output the time of the initial load value (0.0), the data increment step (0.25), and 446 load values at successive time increments. Figure 8.1-6 shows the power output histogram from the wind turbine. Almost 40% of the time the turbine reaches rated power (800 kw). Figure 8.1-7 shows a crossplot of wind turbine output versus wind velocity. The cutin velocity is about 12 mph and rated power is attained at about 28

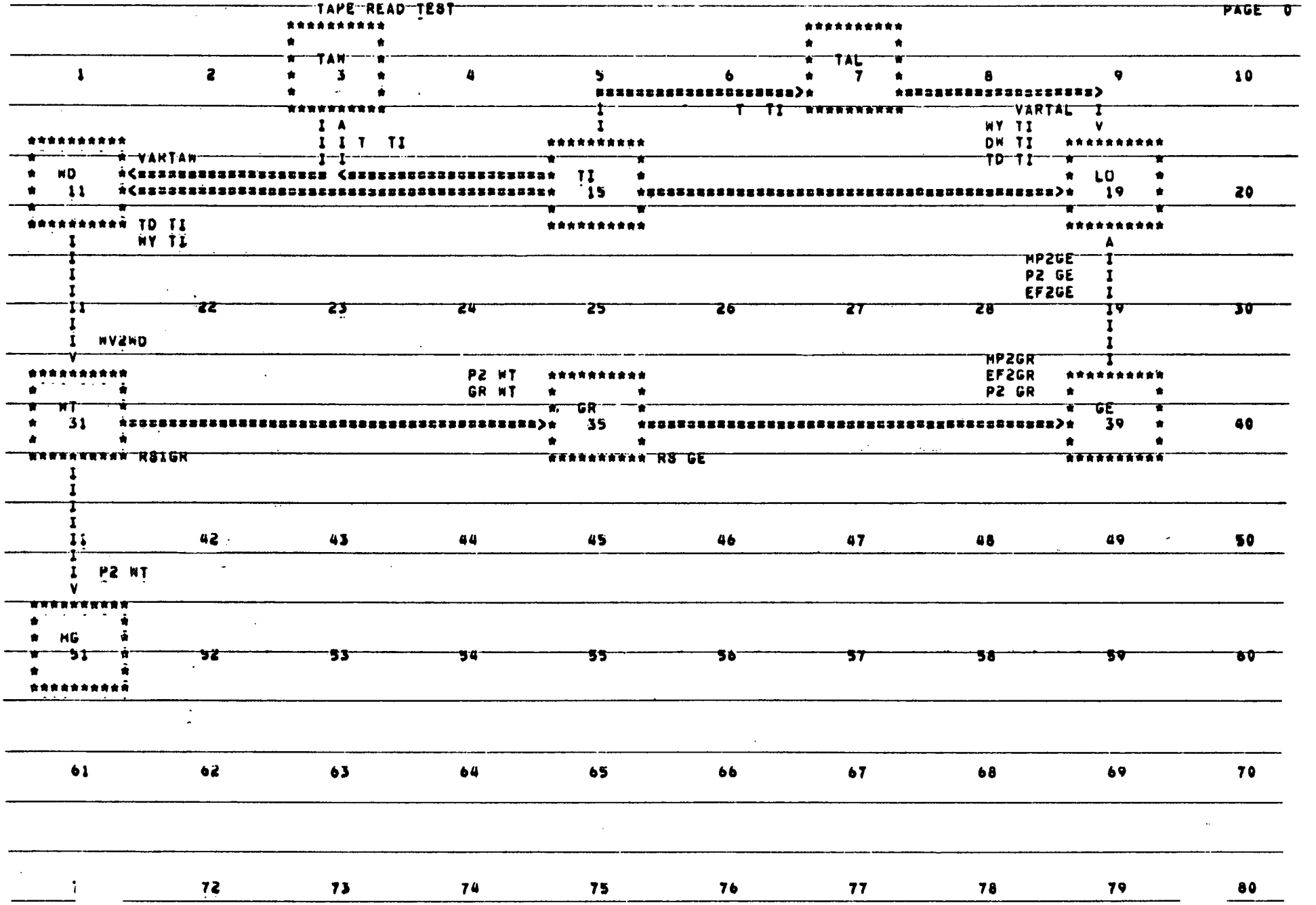

FIGURE 8.1-3 WIND TURBINE AND FILE READ MODEL SCHEMATIC

```
 ITLE= TAPE READ TEST
PARAMETER VALUES
CYCLES=2.01,T0 TI=0,FUPHG=1000,FLOHG=50,NSTTAW=0,ITFTAW=1
VO WT=21,BR WT=80,EC WT=1,CPMWT=.41,CC WT=16000,CM WT=2000
RASGE=.01, CC GR=1000,CM GR=200,NSTTAL=0,ITFTAL=2
PAPGE=750,RSYGE=1800,DA GE=0.2,SR GE=.005,VO GE=400,CC GE=1000,CM GE=200
NC LO=.00574,CT LO=4,MN LO=0,STDLO=6,VE LO=.023
TABLE,PY WD=13
4.,4.33,8.67,13.,17.33,21.67,26.,30.33,34.67,39.,43.33,47.67,52.
65,67,68,65,61,56,51,49,49,52,56,61,65
TABLE,PD WD=7
0,4,8,12,16,20,24
0,0,0,6,6,6,0
TABLE,DF WD=16
0,3,6,9,12,15,18,21,24,27,30,33,36,39,42,45
5,44,160,380,480,512,440,376,307,270,148,76,40,22,9,3
TABLE, PLOGR =7
0,100,200,300,400,500,600
3,4,8,18,32,50,72
TABLE,PD LO=17
0,1.5,3,4.5,6,7.5,9,10.5,12
13.5,15,16.5,18,19.5,21,22.5,24
450,360,372,330,450,660,810,798,804
690,708,699,702,750,708,570,450
TABLE,PW LO=7
1,2,3,4,5,6,7
1,1,.8,.9,.9,.6,.5
TABLE,PY LO=6
0,10,20,30,40,52
226,194,180,174,194,226
PRINTER PLOTS,DISPLAY1
WD2WD,VS,TIME
P2 WT,VS,WD2WD
P2 GR,VS,P2 WT
LO2LO,VS,TIME
PC LO,VS,TIME
DISPLAY2,P2 GE,VS,TIME
TINC=.25,TMAX=168.,PRATE=24,PRINT CONTROL=3,INT MODE=3,OUTRATE=2
SIMULATE
PARAMETER VALUES,T0 TI=4200,NSTTAW=38,NSTTAL=39,TMAX=220
SIMULATE
PARAMETER VALUES,NSTTAL=40,
```

FIGURE 8.1-4 INPUT DATA FOR ANALYSIS PROGRAM

mph. The load-time profile for the simulation is shown in Figure 8.1-8. Daily peaks and troughs are clearly indicated. The lower levels of the last two days reflect week-end load modeling.

/*/*/*/ SIMULATION ANALYSIS /*/*/*/ /

PRINT RATE= 24 DISPLAY RATE= 2 MODE= 3 TINC= .25000 TMAX= 168.00

TAPE READ TEST

CASE NO. 1

IDENTIFICATION HEADER FOR UNIT 11
NO GENERATED WIND DATA

IDENTIFICATION HEADER FOR UNIT 12
LO GENERATED LOAD DATA

.000	.250	572.020	576.458	541.273	542.309	504.160	490.027	458.856	465.241	471.429	461.310
472.202	469.504	484.207	478.548	457.784	462.708	428.157	417.025	435.024	424.541	477.498	477.597
524.878	529.235	580.327	574.953	655.125	684.704	751.090	774.545	849.244	842.653	919.063	906.349
976.191	971.344	1035.062	1030.417	1019.400	1025.785	1025.351	1015.678	1029.436	1016.803	1021.731	1030.062
1036.085	1020.695	1024.203	1026.614	982.779	972.742	929.110	935.981	880.347	874.323	888.260	897.320
894.753	914.397	906.599	905.685	896.960	897.141	895.837	899.829	899.173	897.042	908.923	887.126
902.818	898.822	898.457	898.273	910.522	928.584	951.416	932.214	966.968	961.958	927.407	940.644
906.296	909.801	914.014	904.625	848.249	849.443	783.334	799.167	737.316	728.981	668.681	668.212
622.550	633.111	566.890	571.329	529.372	544.840	509.411	501.604	464.107	453.340	459.528	467.007
460.301	477.917	482.686	483.800	462.589	457.579	444.235	439.874	419.515	429.792	483.195	466.143
526.520	528.161	572.035	570.269	660.377	652.042	770.330	756.319	843.668	857.838	896.782	901.220
957.964	976.595	1026.770	1039.277	1021.489	1024.710	1030.602	1024.092	1031.524	1028.826	1013.439	1024.933
1010.194	1036.326	1032.617	1025.094	991.639	974.384	937.970	924.526	874.771	866.031	886.739	888.582
910.631	899.333	897.415	907.327	909.429	902.392	897.479	895.145	901.262	885.588	900.631	888.768
897.689	893.247	886.110	907.132	909.001	926.617	950.342	937.912	958.230	960.458	963.353	935.515
929.145	918.661	895.342	903.105	849.891	844.314	785.423	780.048	725.415	734.232	684.312	683.844
620.583	621.210	527.518	515.674	487.255	479.243	454.255	434.638	413.080	415.578	421.951	409.596
425.091	425.911	429.801	427.555	417.808	404.358	389.100	388.022	376.195	378.948	417.267	427.101
469.653	461.386	516.310	539.500	592.569	600.906	670.397	672.822	764.028	771.088	805.735	828.013
872.988	858.862	932.067	940.076	917.971	932.658	923.327	932.503	929.850	921.327	920.069	942.602
917.149	934.573	925.140	924.464	878.517	881.672	830.214	842.894	801.363	796.343	790.602	795.509
808.635	804.783	818.895	811.978	807.374	814.032	812.055	807.109	803.271	810.696	812.447	801.771
806.953	818.793	799.780	808.956	826.075	820.398	835.254	839.504	854.944	865.872	850.213	837.347
822.271	837.615	832.466	814.272	757.037	770.703	702.264	691.332	654.351	653.748	608.418	607.997
566.499	567.063	522.901	523.648	498.076	490.064	449.639	451.553	411.712	436.143	423.429	408.227
420.876	436.731	431.681	429.435	413.593	408.683	405.614	402.090	378.074	386.922	421.993	438.323
474.379	466.112	508.445	528.789	594.047	596.289	680.816	677.548	750.470	775.412	807.615	820.550
868.372	872.950	942.887	935.459	925.544	915.451	925.206	921.792	913.044	913.864	912.204	922.549
915.379	911.673	926.217	919.446	883.644	883.150	834.940	841.525	791.053	794.974	805.072	799.833
801.172	794.474	811.432	814.259	824.690	812.262	807.840	811.835	801.501	806.079	804.181	800.402
814.525	820.271	800.856	819.777	827.553	837.715	861.511	838.135	850.327	864.102	858.187	844.919
838.785	823.656	812.413	809.656	756.070	757.145	709.836	711.495	659.479	661.320	609.896	615.971
571.225	562.447	518.686	512.937	481.270	488.695	448.270	450.184	410.343	406.747	403.375	418.646
416.260	429.268	417.722	425.220	421.165	413.810	392.056	388.131	376.304	385.152	429.967	427.612
472.609	473.684	513.171	521.326	592.678	592.074	679.849	682.274	761.291	758.607	818.435	812.685
863.755	874.428	935.424	940.586	939.612	929.921	920.590	930.167	914.924	918.590	923.426	908.991
923.353	916.399	928.498	927.420	878.626	885.029	827.477	834.062	804.720	796.452	809.396	801.713
796.556	789.857	809.662	803.548								

FIGURE 8.1-5 TAPE READ FORMATTED LOAD DATA

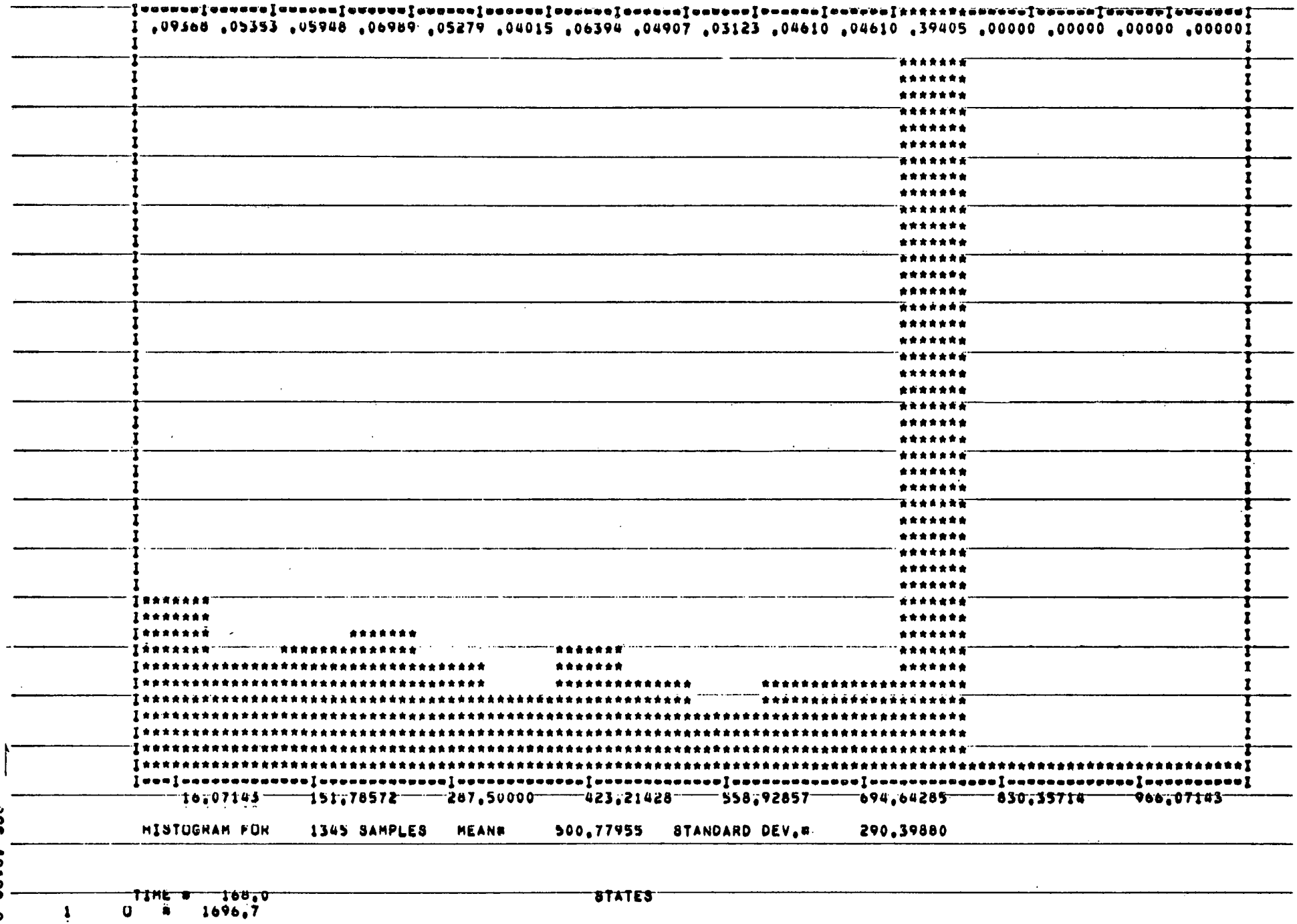

FIGURE 8.1-6 WIND TURBINE POWER HISTOGRAM

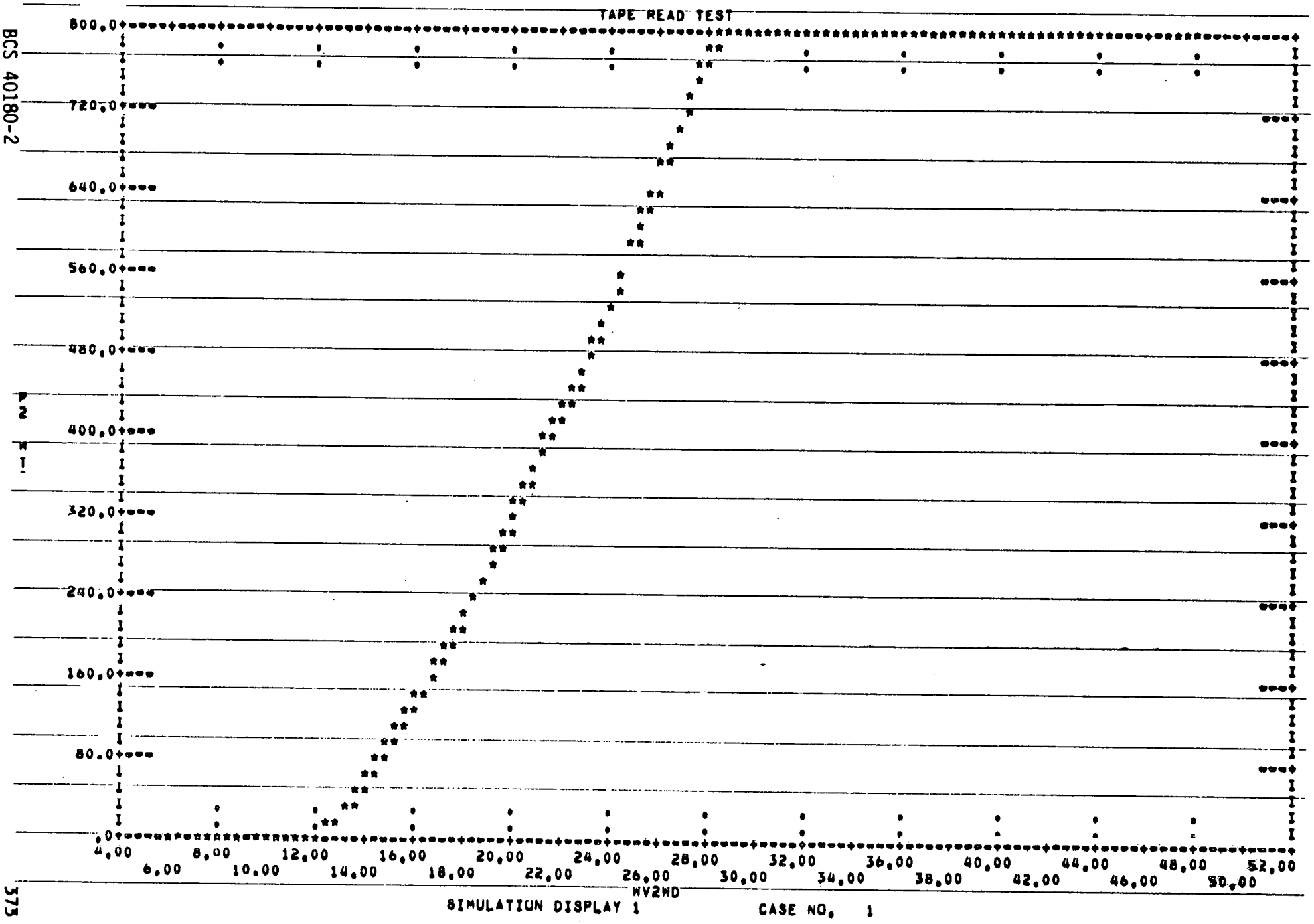

FIGURE 8.1-7 WIND POWER OUTPUT VERSUS WIND VELOCITY

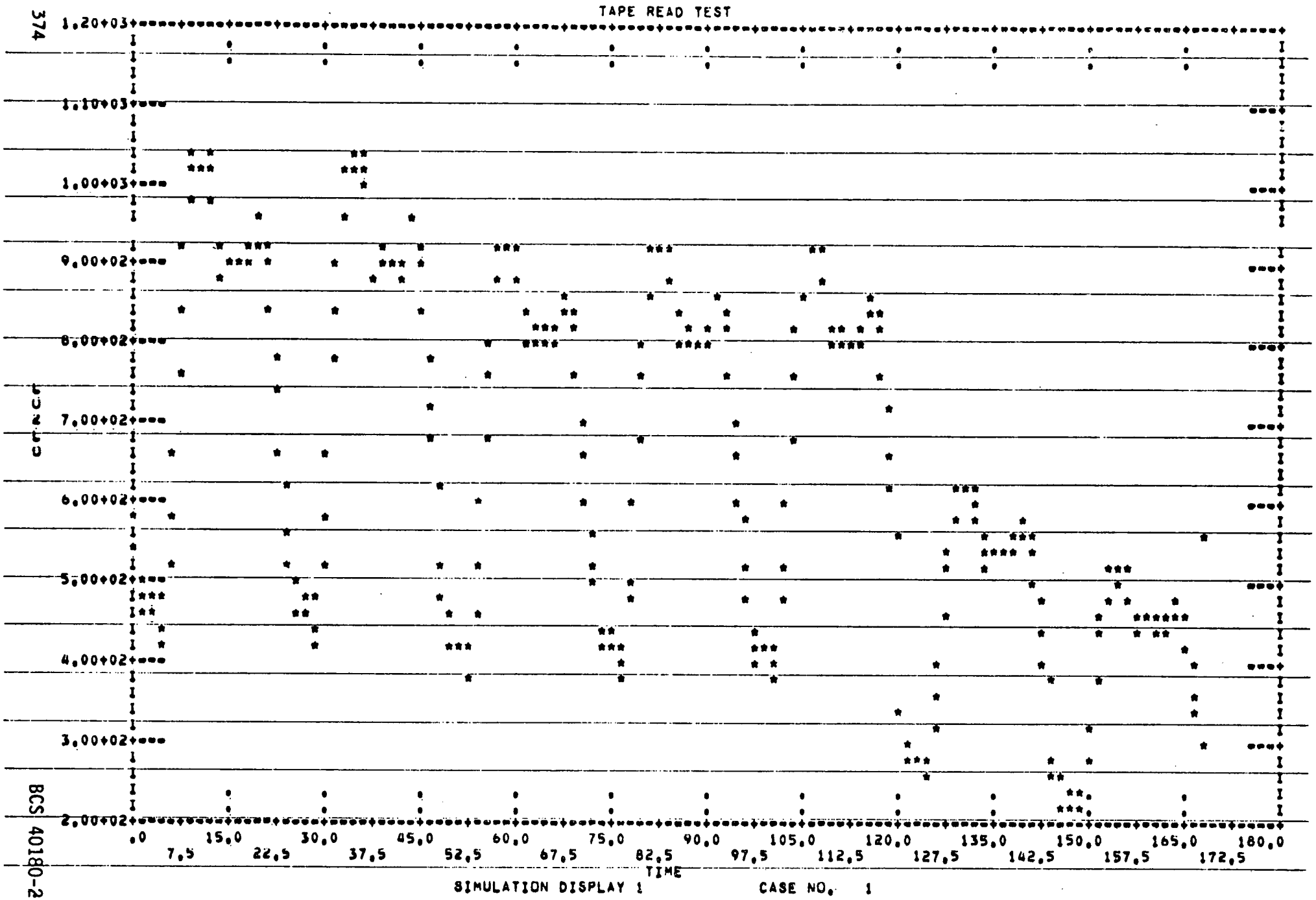

FIGURE 8.1-8 WEEKLY LOAD PROFILE

8.2 BATTERY STORAGE MODEL

A simplified schematic of the battery storage model is shown in Figure 8.2-1. In this model, wind power supplemented by a utility generation source is supplied to a power divider, which delivers power to the load as a first priority, and battery storage as second priority. Similarly, if the load cannot be met from the wind or storage, then the utility is requested to supply peaking power to meet the load. This model exercises the logic components including the priority interrupt.

Figure 8.2-2 shows the model generation input data for the model. The components are generally defined in the order of power flow shown in Figure 8.2-1. Ordering the component definition in this way is recommended to avoid convergence problems in the iteration loop. Thus, it would be somewhat better for consistency to define UT after WP rather than after LO in the model. All three types of model connections are illustrated in this example. For example, WP has the general input connection WD, MAB has the specific input connection WP (P,2 = FIN), and PD has the port to port connection PA (1,1). The port connections are especially useful for connecting up the multiport logic components PA and PD. The connection PA (1,1), for example, connects an input request of PD to PA and a power and maximum power input of PA to PD. It may be observed that the utility is connected up to the surplus port of PD. Thus the baseload power sent to MAB in effect is reduced whenever the load and battery cannot absorb all the power generated. The last component defined is the cost monitor CM, which receives cost input data from other components through a common block rather than by model connections. Figure 8.2-3 shows the model schematic generated by the program. Most of the connection inputs are shown but occasionally a model connection will be overprinted. For example, the input RE1PA to PD is not shown in 8.2-3. In cases like this it is necessary to check the Fortran model (EQMO) in order to verify the model connections.

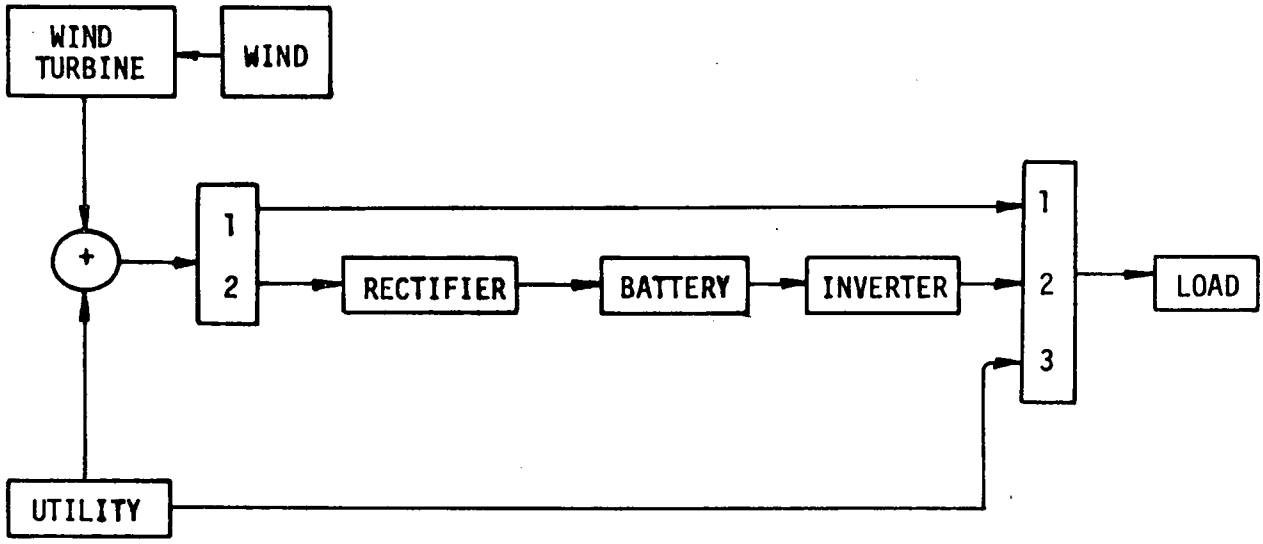

FIGURE 8.2-1: BATTERY STORAGE EXAMPLE

```
MODEL DESCRIPTION        BATTERY TEST CASE
LOCATION=74      TI
LOCATION=61      WD      INPUTS=TI
LOCATION=21      WP      INPUTS=WD
LOCATION=42      MAB     INPUTS=WP(P,2=FIN),UT(P,1=C2)
LOCATION=33      PD      INPUTS=MAB(FO=P),MAB(FO=MP),PA(1,1),PIB(2,2),
                         BA(RE=RE,2)
LOCATION=15      RE      INPUTS=PD (2,1)
LOCATION=17      BA      INPUTS=RE,PA(RE,2=RE)
LOCATION=45      PIB     INPUTS=BA
LOCATION=19      IV      INPUTS=BA
LOCATION=69      PA      INPUTS=IV(2,2),LO(1,0)PIB(4,2),UT(2,3)
LOCATION=76      LO      INPUTS=TI
LOCATION=62      UT      INPUTS=PD(SP=P,0)
LOCATION=1       CM
END OF MODEL
LIST STANDARD COMPONENTS
PRINT
```

FIGURE 8.2-2 BATTERY MODEL INPUT DATA

The input data for two simulations is shown in Figure 8.2-4. In the first simulation the battery is nearly full at time = 0 and the load is chosen larger on the average than the wind and utility power supplied. In the second simulation the reverse is true, i.e. the load is less than that supplied by the wind system, and the battery storage is fairly low. Figures 8.2-5 to 8.2-8 show results from the first simulation. The cost monitor output is shown in Figure 8.2-5. The energy cost of the wind system is low because the wind profile delivers high energy winds during most of the simulation. The average wind velocity in Figure 8.2-6 is about 22 mph. Figure 8.2-7 shows the wind power output supplied directly to the load. The median power output is seen to exceed 450 kw and occasionally output reaches 800 kw or rated power. Figure 8.2-8 shows the usage of battery energy to meet the load during the week, and the increase in storage capacity during the weekends. Since the battery subsystem was limited to 180 kw maximum discharge, the utility was frequently called to meet peak load. Thus about 10% of the load was satisfied by the utility.

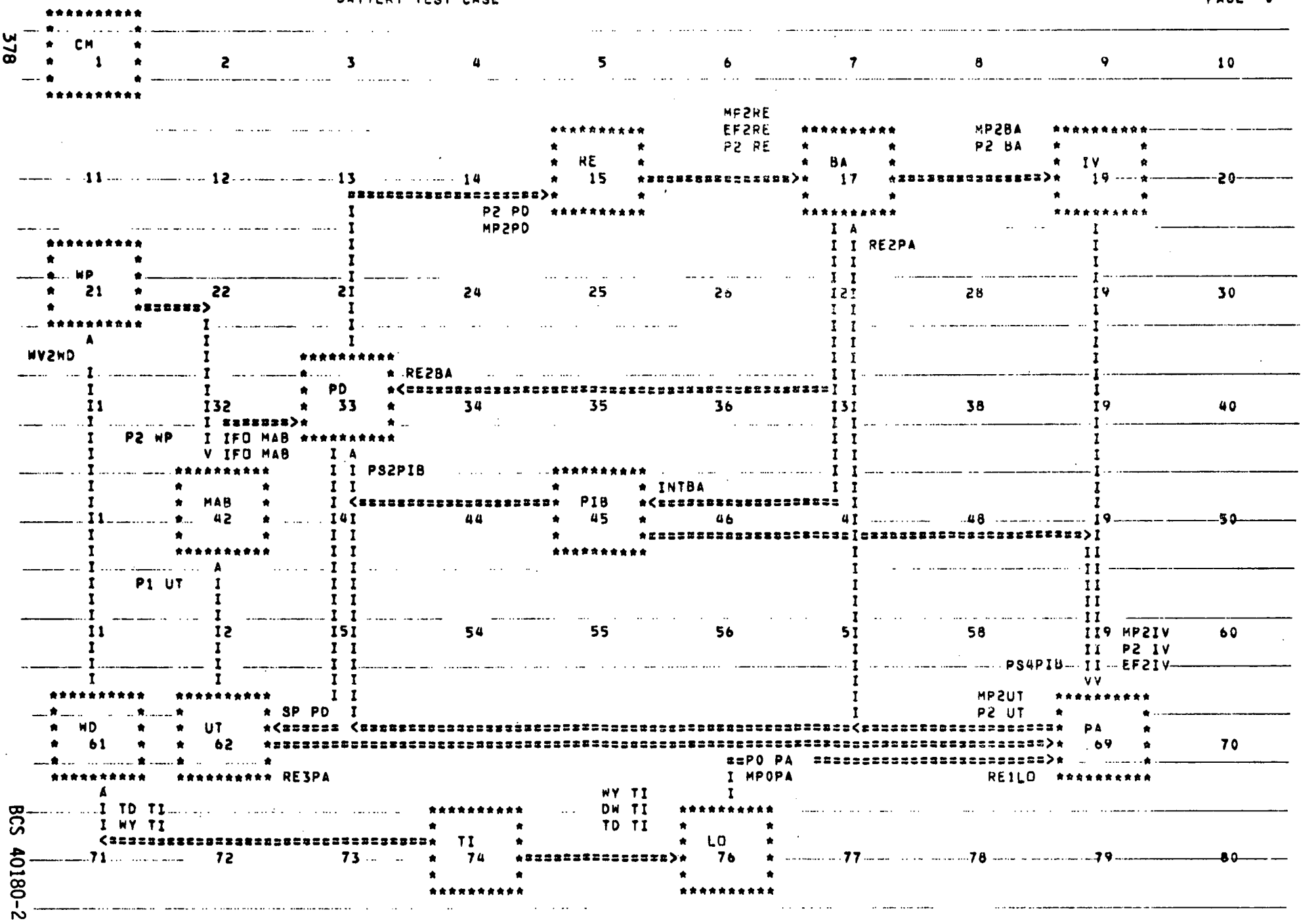

FIGURE 8.2-3 BATTERY MODEL SCHEMATIC

```
TITLE= BATTERY MODEL TEST
PARAMETER VALUES
CR CM=15.,LE CM=30.
BS UT=20.,CB UT=.016,CP UT=.03,CC UT=1000.,CM UT=1000.
C1 MAB=1.
CYCLES=4.01,TO TI=0,V  WP=400,WV0WP=8,WV1WP=60,DLINES=100.
CC WP=16000,CM WP=1200,PB1PIB=2.
EC WP=.2
NC LO=.005,CT LO=4,MN LO=0,STDLO=6,VE LO=.023
RAPBA=200.,E1 BA=2000.,EDEBA=100.
VO BA=100
DT BA=10.,CC BA=2000.,CM BA=100.
RAPRE=200.,CC RE=200.,RAPIV=200.,CC IV=0.
TABLE,PW WP=10
8,10,12,14,16,18,20,21.53,25,30
25.6,50.1,86.5,137.4,205.1,292.,400.6,500,782.8,800
TABLE,PY WD=13
0.,4.33,8.67,13.,17.33,21.67,26.,30.33,34.67,39.,43.33,47.67,52.
65,67,68,65,61,56,51,49,49,52,56,61,65
TABLE,PD WD=7
0,4,8,12,16,20,24
10,12,14,16,14,12,10
TABLE,DF WD=16
0,1,2,3,4,5,6,7,8,9,10,11,12,13,14,15
5,44,160,380,480,512,440,376,307,270,148,76,40,22,9,3
TABLE,PD LO=17
0,1.5,3,4.5,6,7.5,9,10.5,12
13.5,15,16.5,18,19.5,21,22.5,24
450,360,372,330,450,660,810,798,804
690,708,699,702,750,708,570,450
TABLE,PW LO=7
1,2,3,4,5,6,7
1.1,.9,.9,.9,.6,.5
TABLE,PY LO=6
0,10,20,30,40,52
226,194,180,174,194,226
INITIAL CONDITIONS, PE BA =1990.
PRINTER PLOTS,DISPLAY1
WV2WD,VS,TIME
P1 PD,VS,TIME
P2 PD,VS,TIME
PE BA,VS,TIME
DISPLAY2
P2 IV,VS,TIME
RE2BA,VS,TIME
RE1LO,VS,TIME
TINC=.25,TMAX=336.,PRATE=8,PRINT CONTROL=3,INT MODE=3,OUTRATE=8
SIMULATE
PARAMETER VALUES,BS UT=0.,NC LO=.003
E1 BA=1000.,EDEBA=200.
CC IV=1000.
INITIAL CONDITIONS,PE BA=250.
SIMULATE
```

BCS 40180-2 FIGURE 8.2-4 INPUT DATA FOR BATTERY SIMULATION

WIND ENERGY STORAGE COST SUMMARY

30 YEAR LIFE CYCLE

YEARLY SYSTEM COSTS

CAPITAL COST (INCLUDING FIXED CHARGES)	86400. $
FIXED O + M COST	2300. $
OPERATING + FUEL COST	1753. $
TOTAL	90453. $

- ENERGY DELIVERED

ENERGY DELIVERED	4682165. KWH

```
*************************************************
*                                               *
*        ENERGY COST PER KWH          19.3 MILLS *
*                                               *
*************************************************
```

VALUE OF ENERGY DELIVERED (VALUE OF FUEL SAVED)	105440 $
ENERGY VALUE PER KWH	22.5 MILLS
COST PER VALUE DELIVERED	.86

- LOAD FACTOR

PERCENT OF LOAD SUPPLIED BY TOTAL WID SYSTEM	90.4
PERCENT OF LOAD SUPPLIED BY UTILITY	9.6
PERCENT OF WIND ENERGY SURPLUSED	4.0
COST TO MEET LOAD (WIND + UTILITY)	19.8 MILLS

FIGURE 8.2-5 COST MONITOR OUTPUT FOR BATTERY MODEL

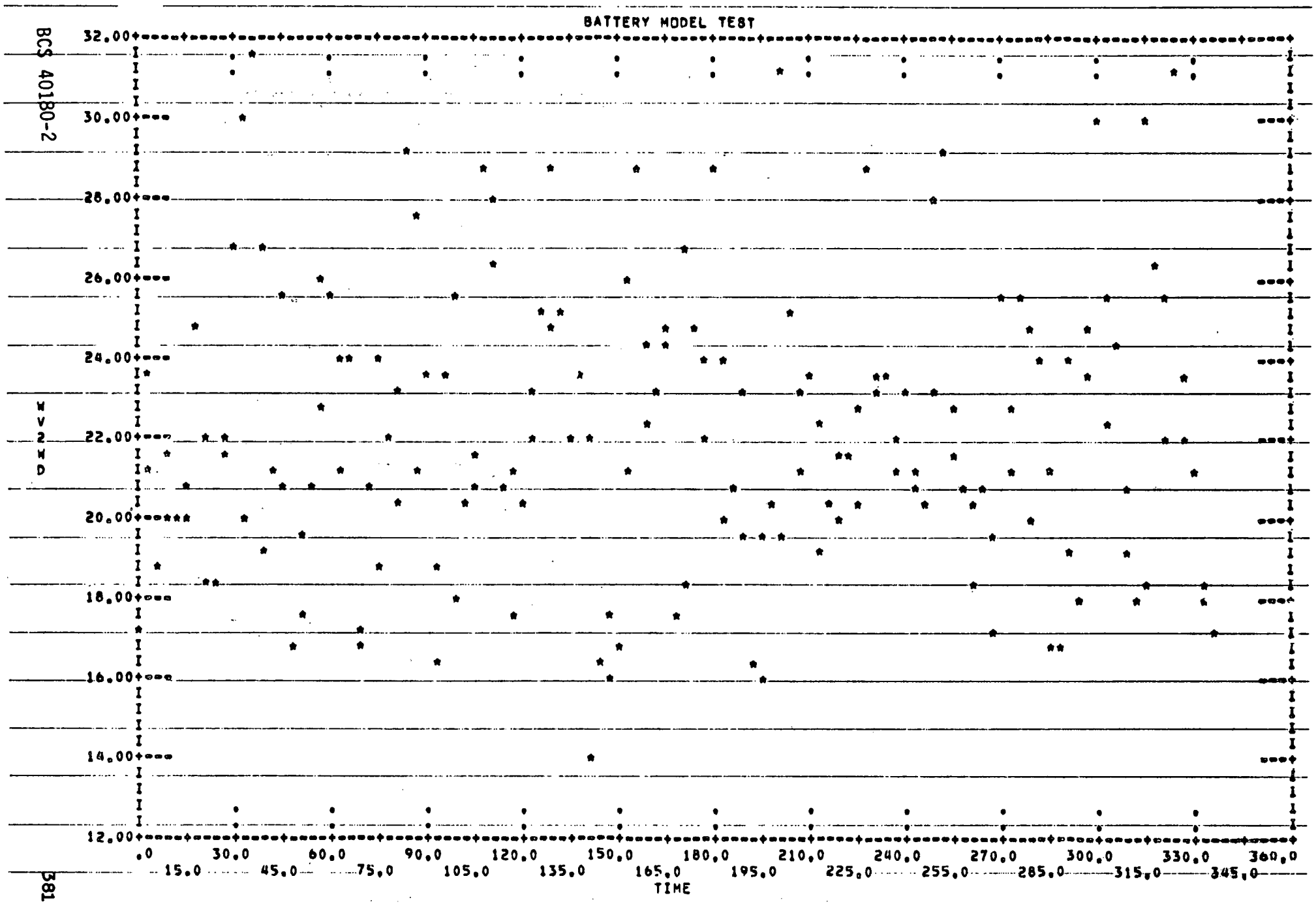

FIGURE 8.2-6 WIND PROFILE FOR BATTERY SIMULATION

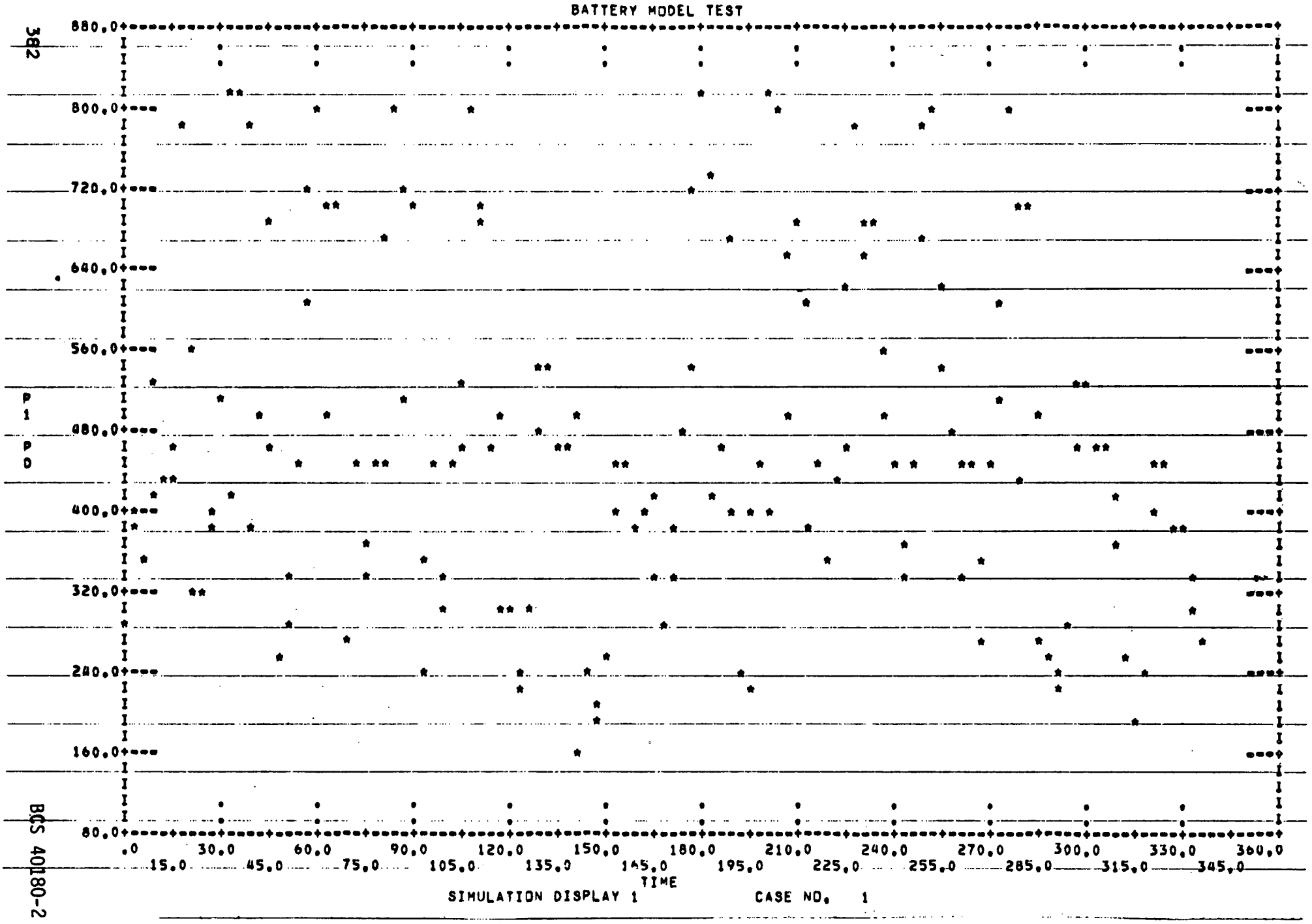

FIGURE 8.2-7 WIND POWER SUPPLIED TO LOAD

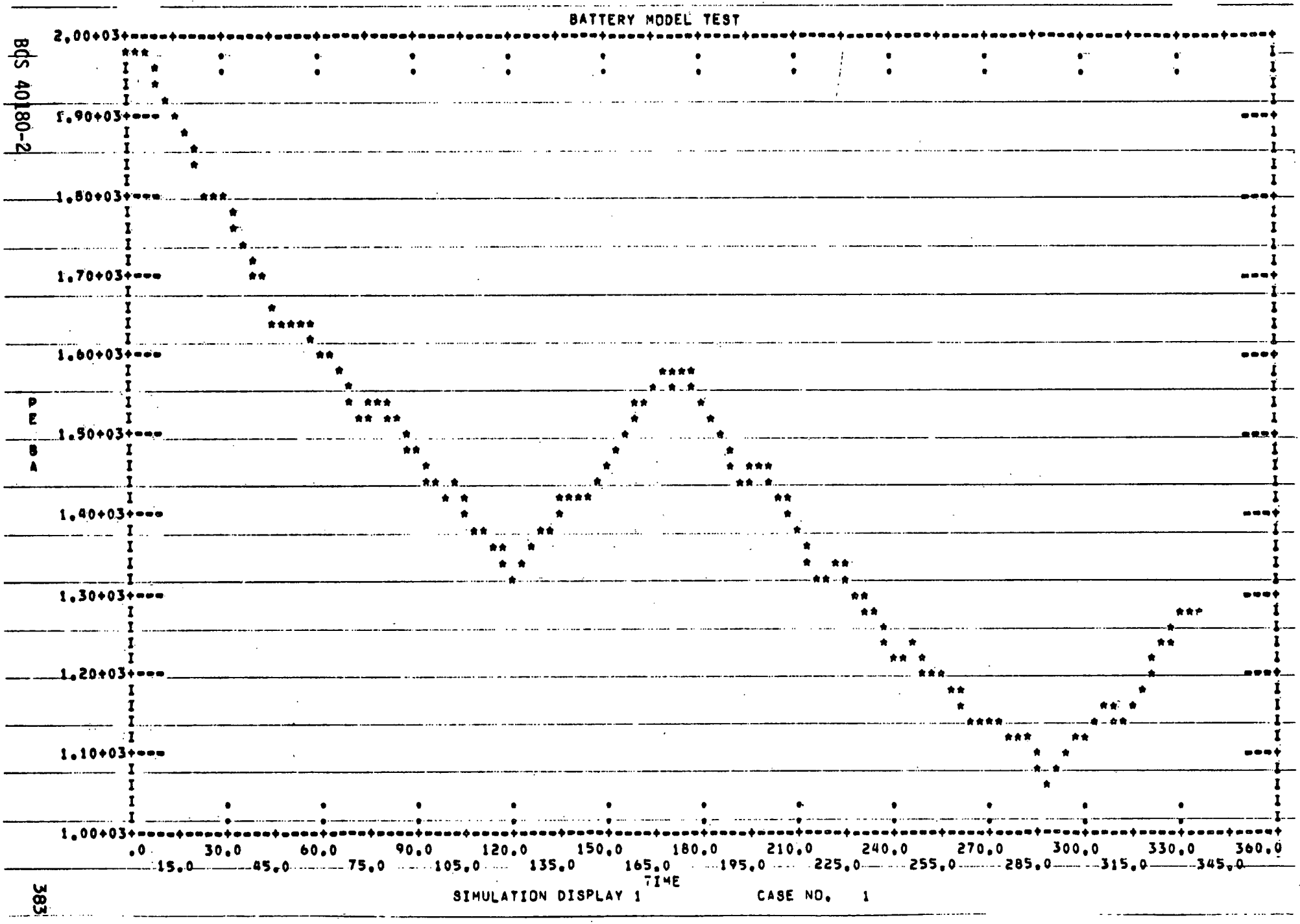

FIGURE 8.2-8 BATTERY POTENTIAL ENERGY STORAGE

8.3 FLYWHEEL STORAGE MODEL

Figure 8.3-1 shows a simplified schematic of the flywheel storage model. This model is very similar to that of 8.2 except that flywheel storage replaces battery storage, and a power line loss is included in the model. The input data for this model is shown in Figure 8.3-2. Observe that the components are defined in the order of information flow shown in 8.3-1. The admittance component AD is used to model transmission line power losses. The model schematic is shown in Figure 8.3-3.

```
MODEL DESCRIPTION        FLYWHEEL TEST CASE
LOCATION=74      TI
LOCATION=61      WD      INPUTS=TI
LOCATION=21      WP      INPUTS=WD
LOCATION=42      MAB     INPUTS=WP(P,2=FIN),UT(P,1=C2)
LOCATION=33      PD      INPUTS=MAB(FO=P,0),MAB(FO-MP),PA(1,1),PIB(2,2)
                                 FL(RE=RE,2)
LOCATION=13      MO      INPUTS=PD(2,1)
LOCATION=4       TRI     INPUTS=MO(2,1),FL(RS=RS,2)
LOCATION=6       FL      INPUTS=TRI,PA(2,1)
LOCATION=8       TRO     INPUTS=FL,GE(RS=RS,2)
LOCATION=19      GE      INPUTS=TRO
LOCATION=45      PIB     INPUTS=FL
LOCATION=69      PA      INPUTS=GE(2,2),LO(RE,1=RE,0),PIB(4,2)
                               UT(2,3)
LOCATION=78      AD      INPUTS=PA
LOCATION=76      LO      INPUTS=TI,AD
LOCATION=62      UT      INPUTS=PD (SP=P,0)
LOCATION=1       CM
END OF MODEL
LIST STANDARD COMPONENTS
PRINT
```

FIGURE 8.3-2 FLYWHEEL MODEL INPUT DATA

The simulation input data shown in Figure 8.3-4 uses the same wind and load data as Example 8.2. However, the storage component is rated at 400 kw with one hour storage, simulating a system used for temporary storage and discharge during peak power generation and load demand periods. It may be noted that the transmission power loss table is input for both TRI and TRO. Figures 8.3-5 to 8.3-7 show results from the simulation. Charging power to the

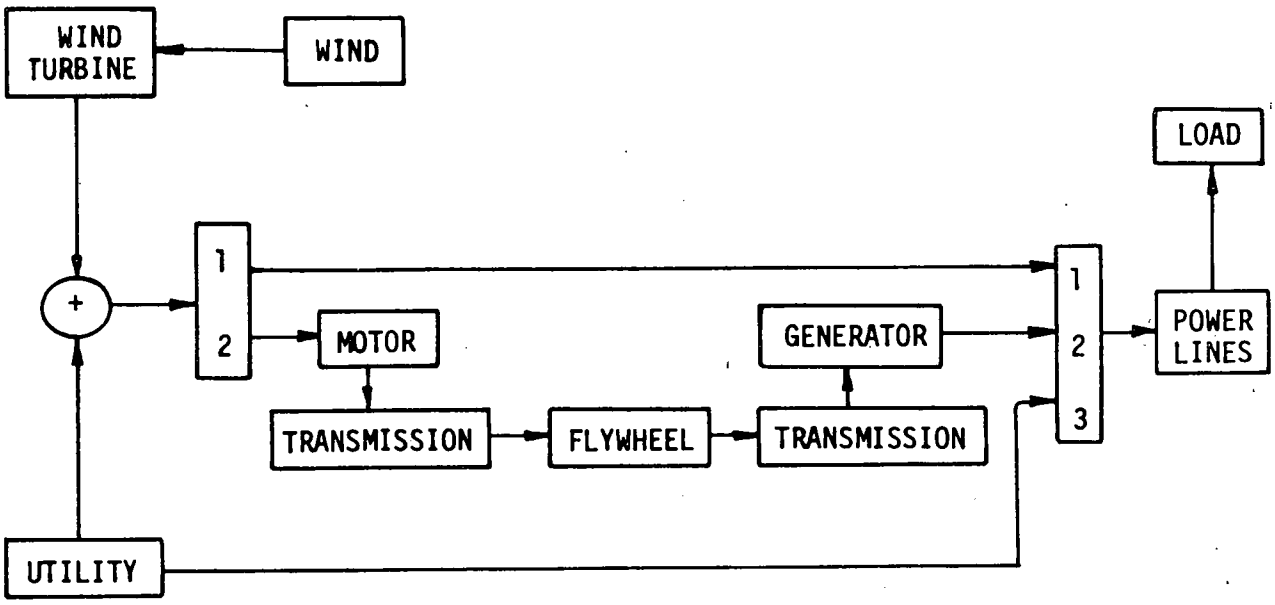

FIGURE 8.3-1: FLYWHEEL STORAGE EXAMPLE

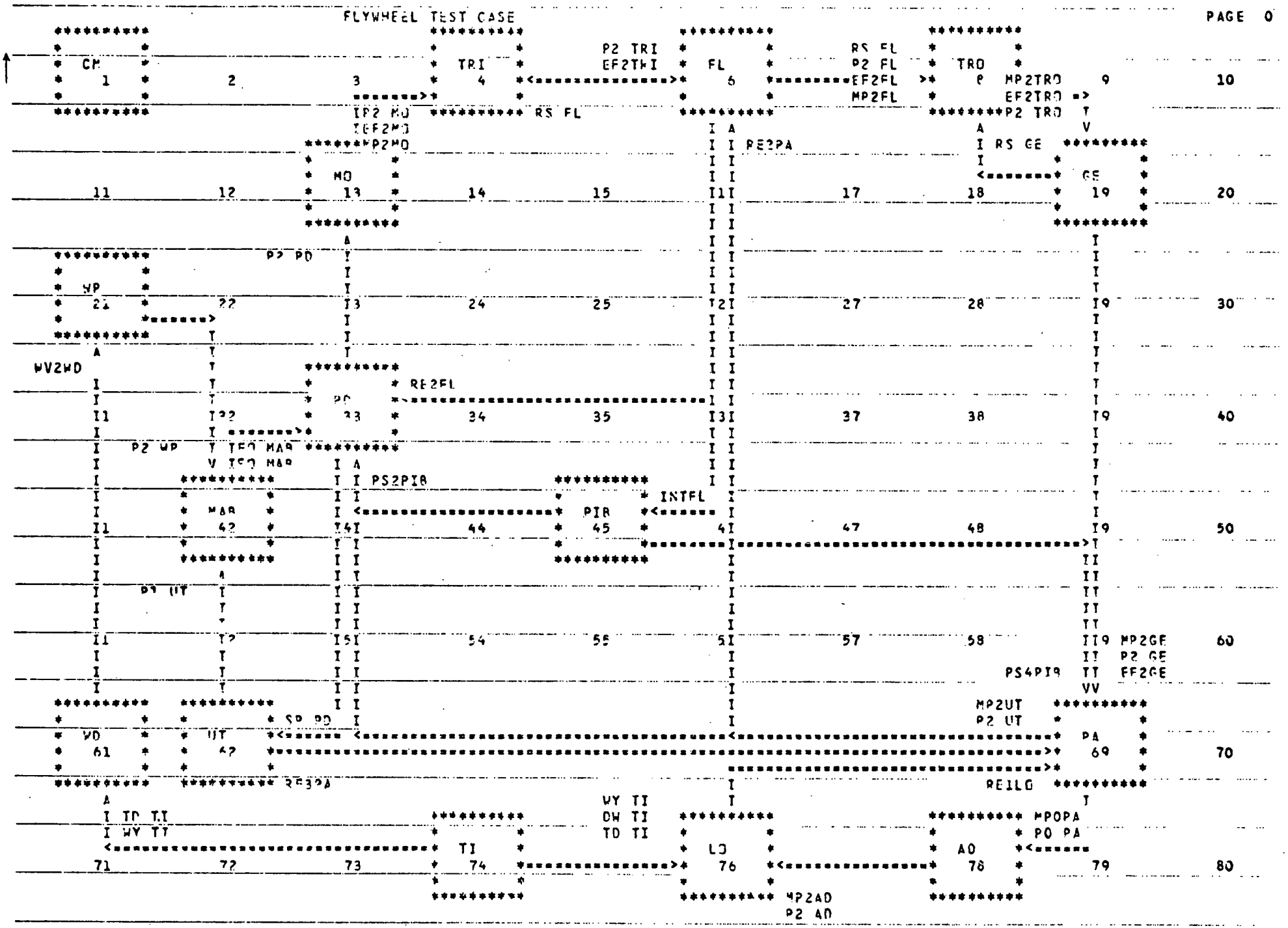

FIGURE 8.3-3 FLYWHEEL MODEL SCHEMATIC

flywheel in excess of that needed for the load is shown in Figure 8.3-5. Even with average load demand exceeding wind generation, the flywheel is charged at rated power fairly often. The kinetic energy stored by the flywheel over a two week period is shown in Figure 8.3-6. During the week energy is frequently withdrawn and storage is generally not much above the dead-band (80 kwh), whereas during the weekend the reverse is true. Output from the cost monitor is shown in Figure 8.3-7. The capital costs are probably low since nominal values were used for component costs. The utility supplied nearly 20% of the load in this case, since flywheel storage capacity is quite low.

```
TITLE= FLYWHEEL MODEL TEST
PARAMETER VALUES
VO AD=100,G1 AD=8.,G2 AD=8.,GM AD=-8.,BM AD=200
SR GE=.008,C2 FL=3.E-8
PR FL=.02,HM FL=3372,RF FL=3.5,SR FL=.4,WT FL=24000,KF FL=1.3E-5
ZE FL=.1,RAPFL=400,ED FL=40,E1 FL=400,EDEFL=20,CM FL=800,CC FL=300
RS MO=1750,RAPMO=1000,MP1MO=1.E8,CC MO=500,CM MO=0.
RS1TRI=1750,CC TRI=500,CM TRI=0,CC TRO=500,CM TRO=0.
RAPGE=1000,CC GE=1000,CM GE=100.
CR CM=15.,LE CM=30.
BS UT=20.,CB UT=.016,CP UT=.03,CC UT=1000.,CM UT=1000.
C1 MAB=1.
CYCLES=4.01,TO TI=0,V  WP=400,WV0WP=8,WV1WP=60,DLINES=100.
CC WP=16000,CM WP=1200,PS1PIB=2.
EC WP=.2
NC LO=.005,CT LO=4,MN LO=0.STDLO=6,VE LO=.023
TABLE,PLOTRI=5,4
0.5,1,1.5,1.72
0,400,900,1100,1300
0.16,18,18.5,20
0,10,11,11.5,12
0,10,10,10.5,11
0.6,6.5,7,10
TABLE,PLOTRO=5,4
.5,1,1.5,1.72
0,400,900,1100,1300
0,16,18,18.5,20
0,10,11,11.5,12
0,10,10,10.5,11
0,6,6.5,7,10
TABLE,CLOFL=3,3
-1000,  0,  1000
2000,4000,7000
2.8,    7.4,   15
 .9,    2.5,    5
2.6,    7.2,   15
TABLE,CL1FL=3
2000,4000,7000
 .8,    2.4,    4
TABLE,PW WP=10
8,10,12,14,16,18,20,21.53,25,30
25.6,50.1,86.5,137.4,205.1,292.,400.6,500,782.8,800
TABLE,PY WD=13
0.,4.33,8.67,13.,17.33,21.67,26.,30.33,34.67,39.,43.33,47.67,52.
65,67,68,65,61,56,51,49,49,52,56,61,65
TABLE,PD WD=7
0,4,8,12,16,20,24
10,12,14,16,14,12,10
TABLE,DF WD=16
0,1,2,3,4,5,6,7,8,9,10,11,12,13,14,15
5,44,160,380,480,512,440,376,307,270,148,76,40,22,9,3
TABLE,PD LO=17
0,1.5,3,4.5,6,7.5,9,10.5,12
13.5,15,16.5,18,19.5,21,22.5,24
450,360,372,330,450,660,810,798,804
690,708,699,702,750,708,570,450
TABLE,PW LO=7
1,2,3,4,5,6,7
1,1,.9,.9,.9,.6,.5
TABLE,PY LO=6
0,10,20,30,40,52
226,194,180,174,194,226
INITIAL CONDITIONS, KE FL=300.
PRINTER PLOTS,DISPLAY1
WV2WD,VS.TIME
P1 PD,VS,TIME
P2 PD,VS,TIME
KE FL,VS,TIME
DISPLAY2
P2 GE,VS,TIME
RE2FL,VS,TIME
RE1LO,VS,TIME
TINC=.25,TMAX=336.,PRATE=8,PRINT CONTROL=3,INT MODE=3,OUTRATE=8
SIMULATE
```

FIGURE 8.3-4 FLYWHEEL SIMULATION DATA

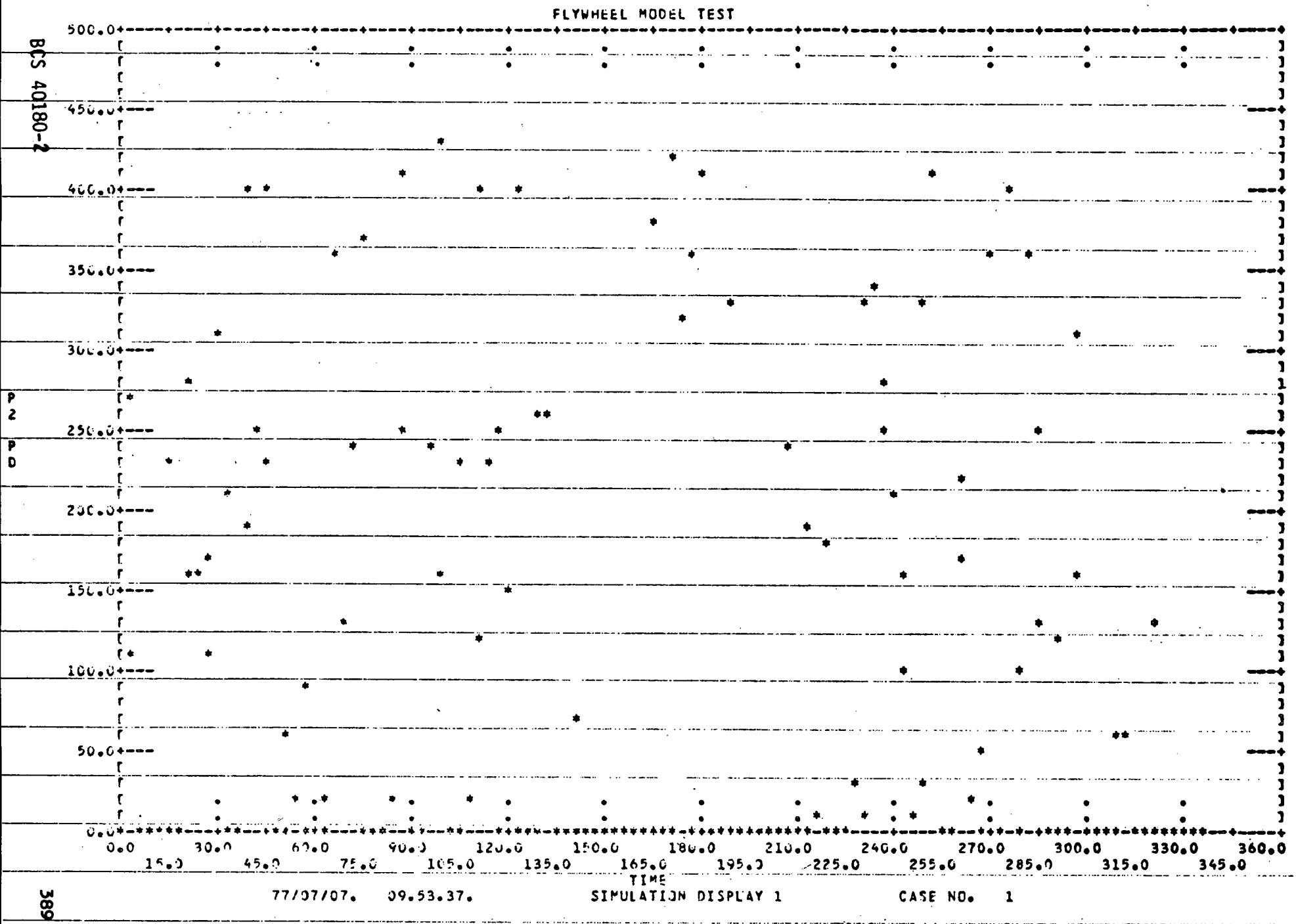

FIGURE 8.3-5 WIND POWER SUPPLIED TO FLYWHEEL STORAGE

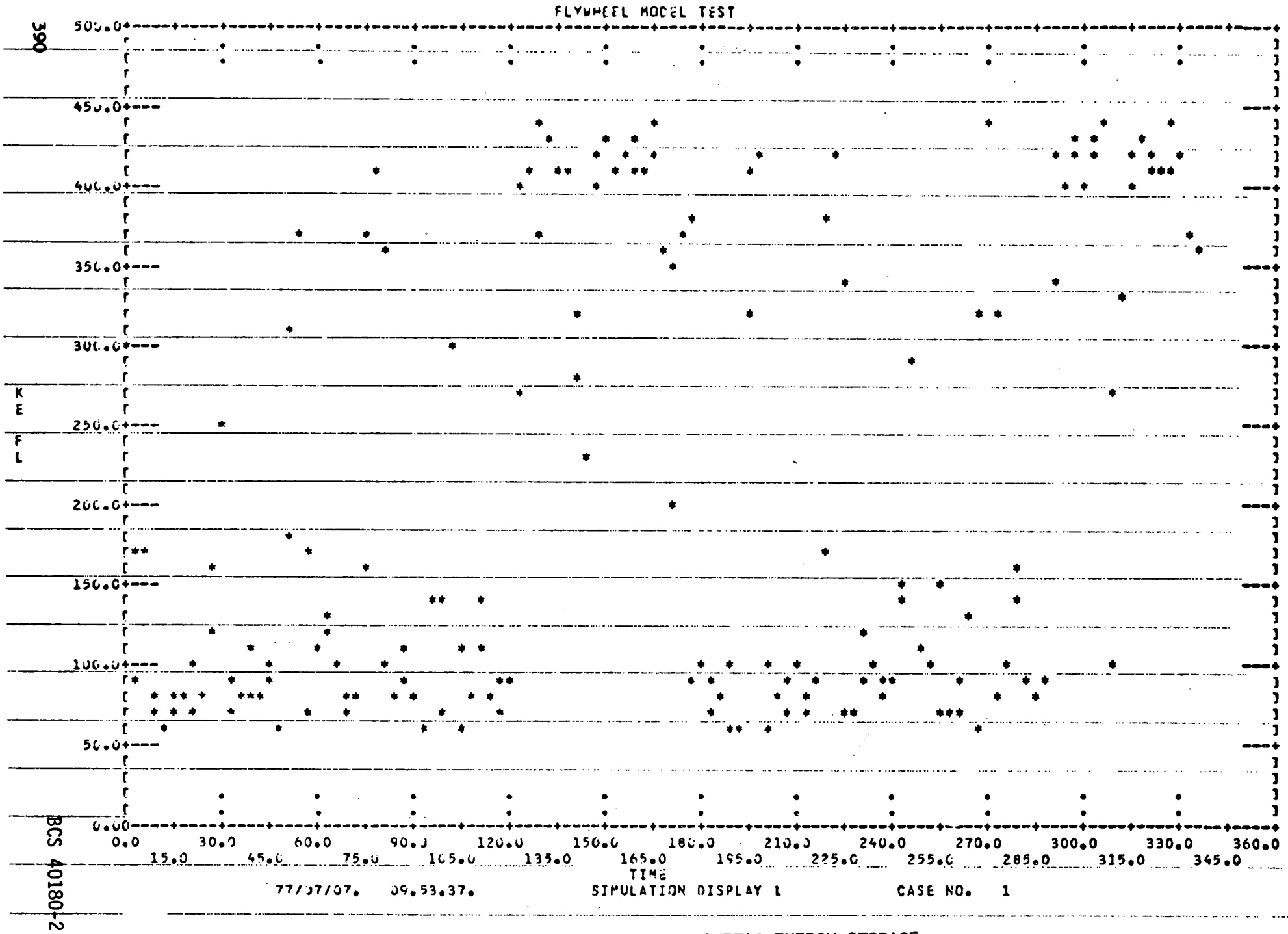

FIGURE 8.3-6 FLYWHEEL KINETIC ENERGY STORAGE

WIND ENERGY STORAGE COST SUMMARY

30 YEAR LIFE CYCLE

YEARLY SYSTEM COSTS

CAPITAL COST (INCLUDING FIXED CHARGES)	89104. $
FIXED O + M COST	3100. $
OPERATING + FUEL COST	1753. $
TOTAL	93957 $

ENERGY DELIVERED

ENERGY DELIVERED	4440974. KWH

****
* ENERGY COST PER KWH 21.2 MILLS *
****

VALUE OF ENERGY DELIVERED (VALUE OF FUEL SAVED)	95217 $
ENERGY VALUE PER KWH	21.4 MILLS
COST PER VALUE DELIVERED	.99

LOAD FACTOR

PERCENT OF LOAD SUPPLIED BY TOTAL WIND SYSTEM	81.3
PERCENT OF LOAD SUPPLIED BY UTILITY	18.7
PERCENT OF WIND ENERGY SURPLUSED	8.3
COST TO MEET LOAD (WIND + UTILITY)	22.3 MILLS

FIGURE 8.3-7 FLYWHEEL MODEL COST MONITOR OUTPUT

8.4 HYDRO AND THERMAL STORAGE MODEL

Figure 8.4-1 shows the basic model schematic for a model with both thermal and electrical loads. Wind power is supplied first to meet the electrical load, with excess power going into hydro and thermal storage. The thermal load is driven by an ambient temperature component and electrical load energy value is supplied by a time dependent look-up table. Figure 8.4-2 shows the model input data. The components are ordered according to the flow of information in 8.4-1. Observe that the maximum power input of the power divider is connected up to the wind power output P. The model schematic is shown in Figure 8.4-3.

```
LIST STANDARD COMPONENTS
MODEL DESCRIPTION        HYDRO AND THERMAL TEST CASE
LOCATION=77      TI
LOCATION=51      WD        INPUTS=TI
LOCATION=21      WP        INPUTS=WD
LOCATION=33      PD        INPUTS=WP,WP(P=MP),PA(1,1),PIH(2,2),HS(RE=RE,2)
                           INPUTS=TS(2,3),PIT(2,3)
LOCATION=13      MO        INPUTS=PD(2,1)
LOCATION=15      PU        INPUTS=MO
LOCATION=17      HS        INPUTS=PU,PA(RE,2=RE)
LOCATION=45      PIH       INPUTS=HS
LOCATION=19      HT        INPUTS=HS
LOCATION=40      GE        INPUTS=HT
LOCATION=59      PA        INPUTS=GE(2,2),LO(1,0),PIH(4,2)
LOCATION=78      FU        INPUTS=TI(TD=FIN)
LOCATION-80      LO        INPUTS=TI,FU(FO=VE)
LOCATION=63      TS        INPUTS=TL
LOCATION=52      PIT       INPUTS=TS
LOCATION=67      TP        INPUTS=TI
LOCATION=65      TI.       INPUTS=TI,TP
LOCATION= 1      CM
END OF MODEL
PRINT
```

FIGURE 8.4-2 HYDRO AND THERMAL MODEL INPUT DATA

The input data for a two week simulation with this model is shown in Figure 8.4-4. CYCLES is equal to 6 in this model for sufficient iterations to attain steady state in the hydro storage subsystem. The hydro system has

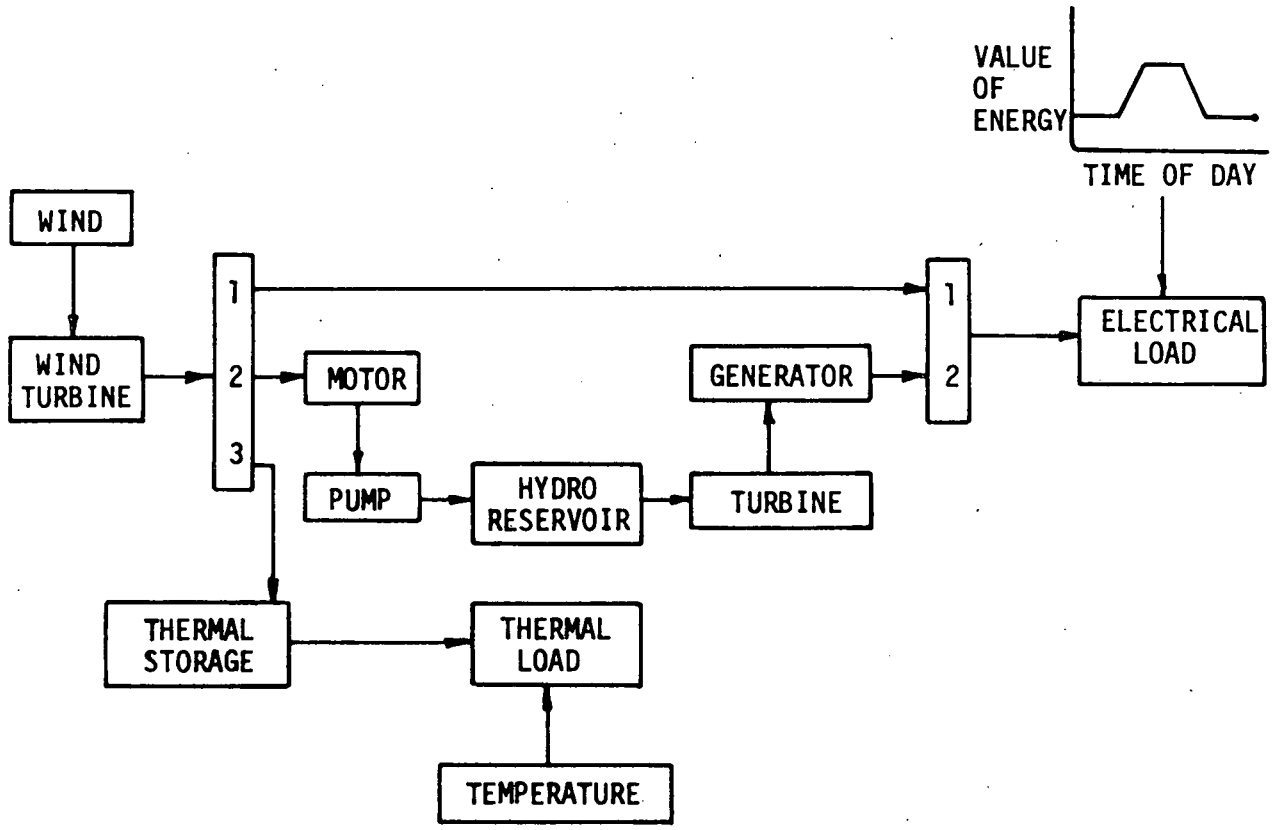

FIGURE 8.4-1: HYDRO AND THERMAL STORAGE EXAMPLE

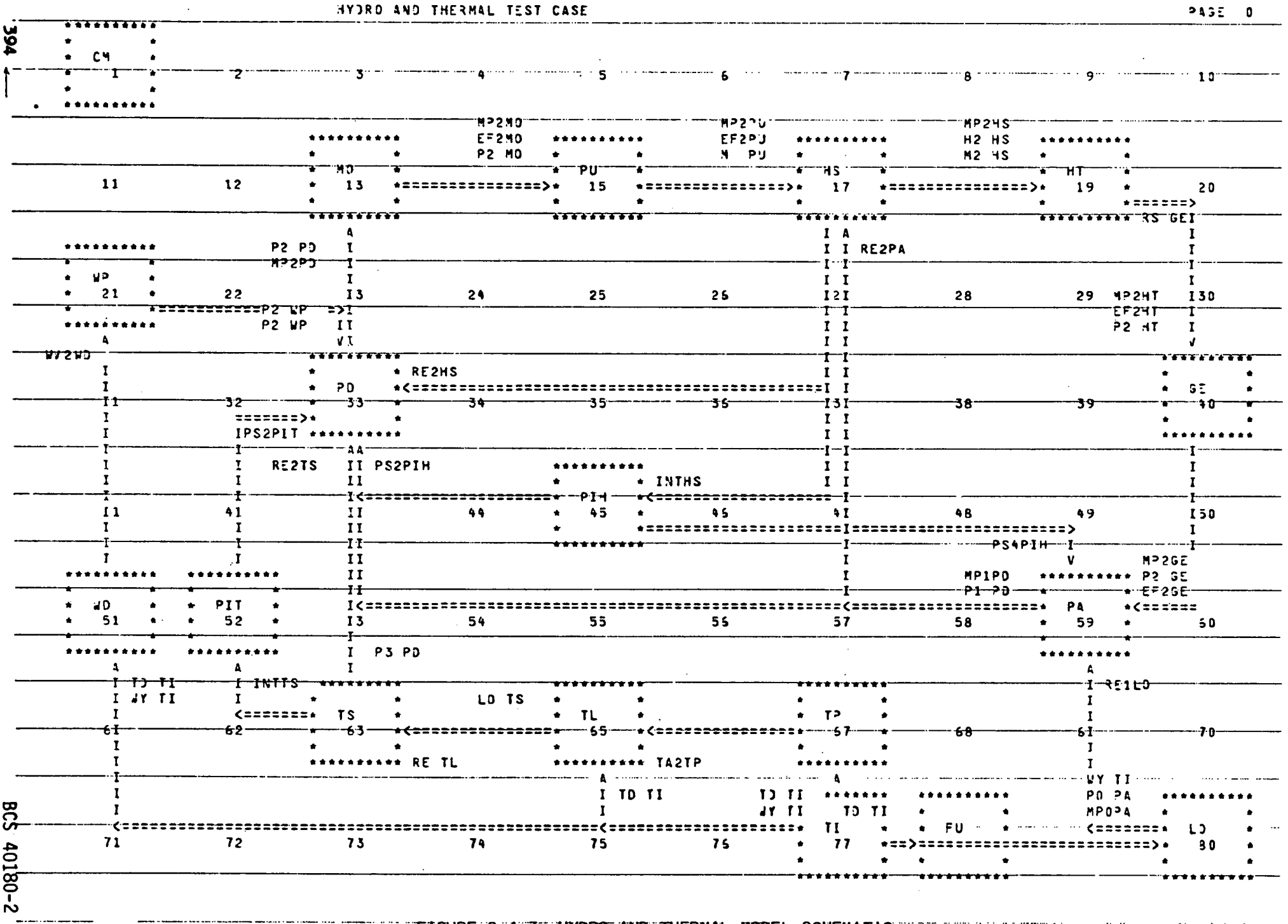

FIGURE 8.4-3 HYDRO AND THERMAL MODEL SCHEMATIC

```
PARAMETER VALUES
CYCLES=5.01,TO TI=0,V  WP=400,WVOWP=8,WVIWP=60,DLINES=100.
CC WP=16000,CM WP=1200,PSIPIH=2.,EC WP=.2,CR CM=15,LE CM=30
41 PU=200,AS HS=3600,MDRHS=80,MO HS=80000,CM HS=1000
41 HS=200,MDEHS=400000,LE HS=30,F2 PD=.5,F3 PD=.5
RAPGE=200,RSYGE=3600,SR GE=.0333,CC GE=1000,CM GE=120
VC LO=.004,CT LO=4,MN LO=0,STDLO=5,AN FU=-1.
PSIPIT=2.,TS TS=10,VO TS=110,PD TS=100,LE TS=30,MFMTS=10000.
DH TS=.01465,TDETS=2,RS MO=1750,RAPMO=200,CC MO=500,CM MO=100
VE TL=.023,VC TL=40.,CT TP=12,MN TP=0,STDTP=5.
TABLE,PW WO=10
3,10,12,14,16,18,20,21.53,25,30
25.6,50.1,85.5,137.4,205.1,292.,400.6,500,782.8,900
TABLE,PY WO=13
0.,4.33,8.67,13.,17.33,21.67,26.,30.33,34.67,39.,43.33,47.67,52.
55,67,63,55,51,55,51,49,49,52,55,61,65
TABLE,PD WO=7
0,3,8,12,16,20,24
10,12,14,16,14,12,10
TABLE,DF WO=15
0,1,2,3,4,5,6,7,8,9,10,11,12,13,14,15
5,34,160,380,480,512,440,376,307,270,148,76,40,22,9,3
TABLE,HT TS=4
.00879,.025431,.047371,.069072
90,147,147,204
TABLE,PD LO=17
0,1.5,3,4.5,6,7.5,9,10.5,12
13.5,15,16.5,18,19.5,21,22.5,24
450,360,372,330,450,660,810,798,804
593,709,699,702,750,708,570,450
TABLE,PW LO=7
1,2,3,4,5,6,7
1,1,.9,.9,.3,.6,.5
TABLE,PY LO=6
0,10,20,30,40,52
225,194,180,174,194,226
TABLE, ETAFU = 5
0,5,10,18,22,24
.019,.019,.028,.028,.019,.019
TABLE,TLOTL=4
0,32,60,100
4.,2.,1.5,1.
TABLE,TWTTL=4
0,5,18,24
.4,1.,1.,.4
TABLE,PD TP=9
0,5,6,9,12,15,18,21,24
46,45,43,55,62,64,56,48,46
TABLE,PY TP=5
0,13,25,39,52
40,50,75,65,40
INITIAL CONDITIONS, MA HS=1600000,E  TS=600
PRENTER PLOTS,DISPLAY1
AV2WD,VS,TIME
P1 PD,VS,TIME
4  PU,VS,TIME
DISPLAY2
E  HS,VS,TIME

42 HS,VS,TIME
REZHS,VS,TIME
DISPLAY3
PC LO,VS,TIME
P3 PD,VS,TIME
E  TS,VS,TIME
RELLO,VS,TIME
DISPLAY4
LO TS,VS,TIME
PC TL,VS,TIME
TA2TP,VS,TIME
FO FU,VS,TO TI
TINC=.50,TMAX=336.,PRATE=6,PRINT CONTROL=3,INT MODE=3,OUTRATE=4
TITLE = HYDRO AND THERMAL TEST
SIMULATE
```

FIGURE 8.4-4 HYDRO AND THERMAL SIMULATION DATA

much larger capacity and supplies a bigger load than the thermal system in this run. Figures 8.4–5 to 8.4–9 show results of the simulation. Hydro energy storage is shown in 8.4–5. During the week most of the wind energy goes directly to the load except at night. The reservoir builds up to capacity during the week-ends. The cumulative percent load delivered by wind and hydro storage is shown in 8.4–6, and averages about 91%. Similarly, thermal energy stored and percent thermal load delivered are shown in 8.4–7 and 8.4–8. The ambient temperature profile for a similar, one week simulation is shown in 8.4.9.

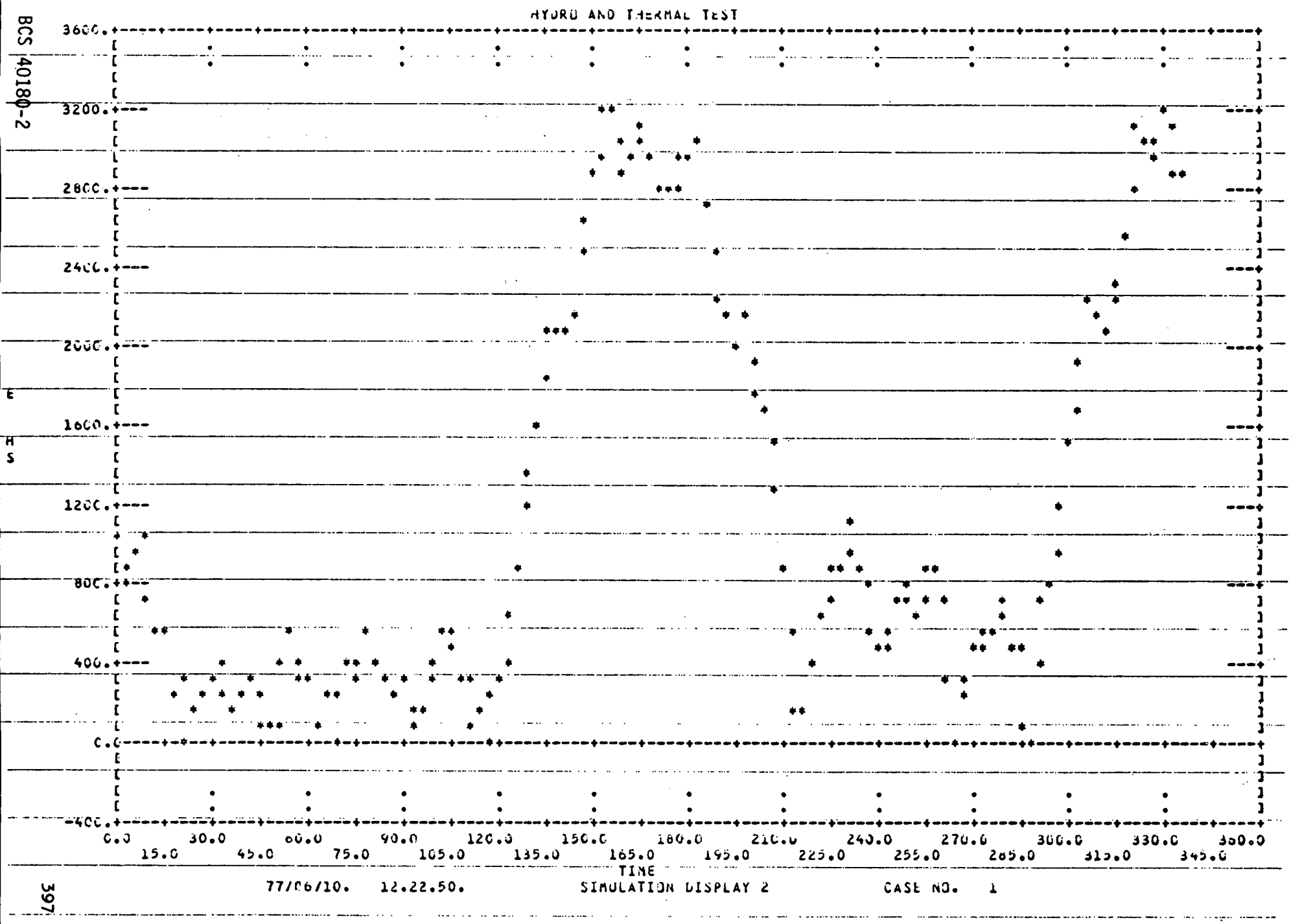

FIGURE 8.4-5 HYDRO RESERVOIR ENERGY STORAGE

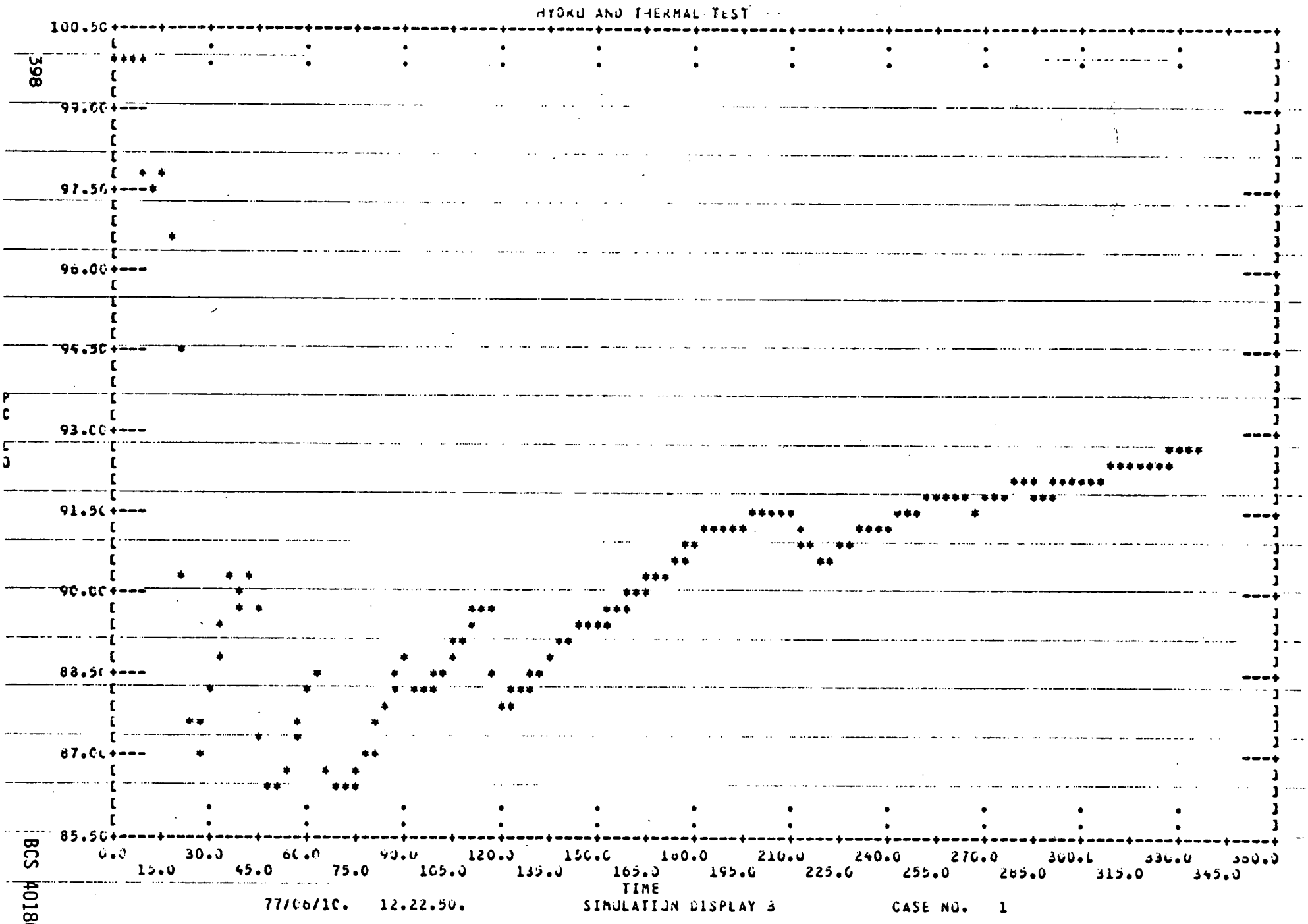

FIGURE 8.4-6 PERCENT CUMULATIVE LOAD DELIVERED

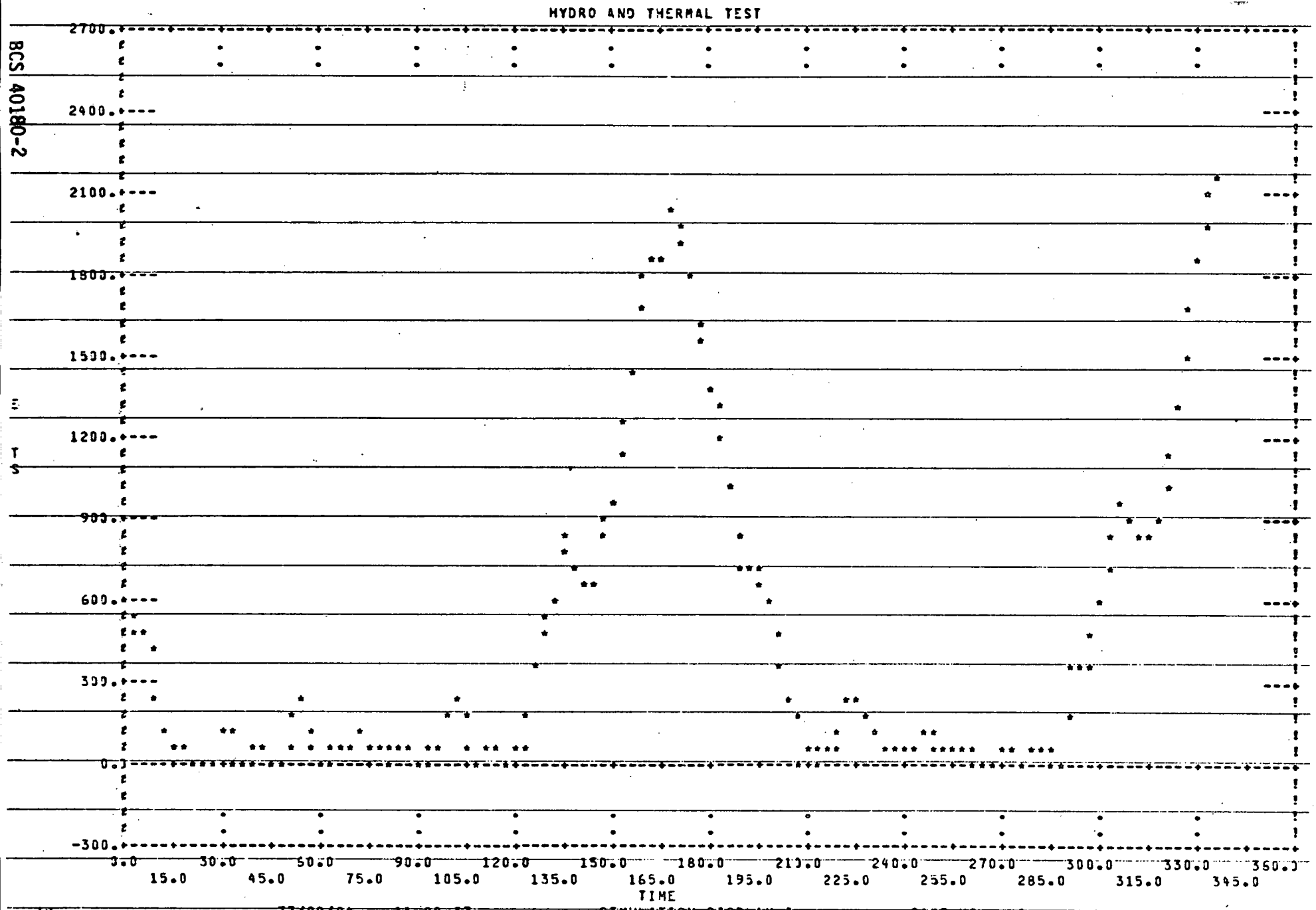

FIGURE 8.4-7 THERMAL ENERGY STORAGE

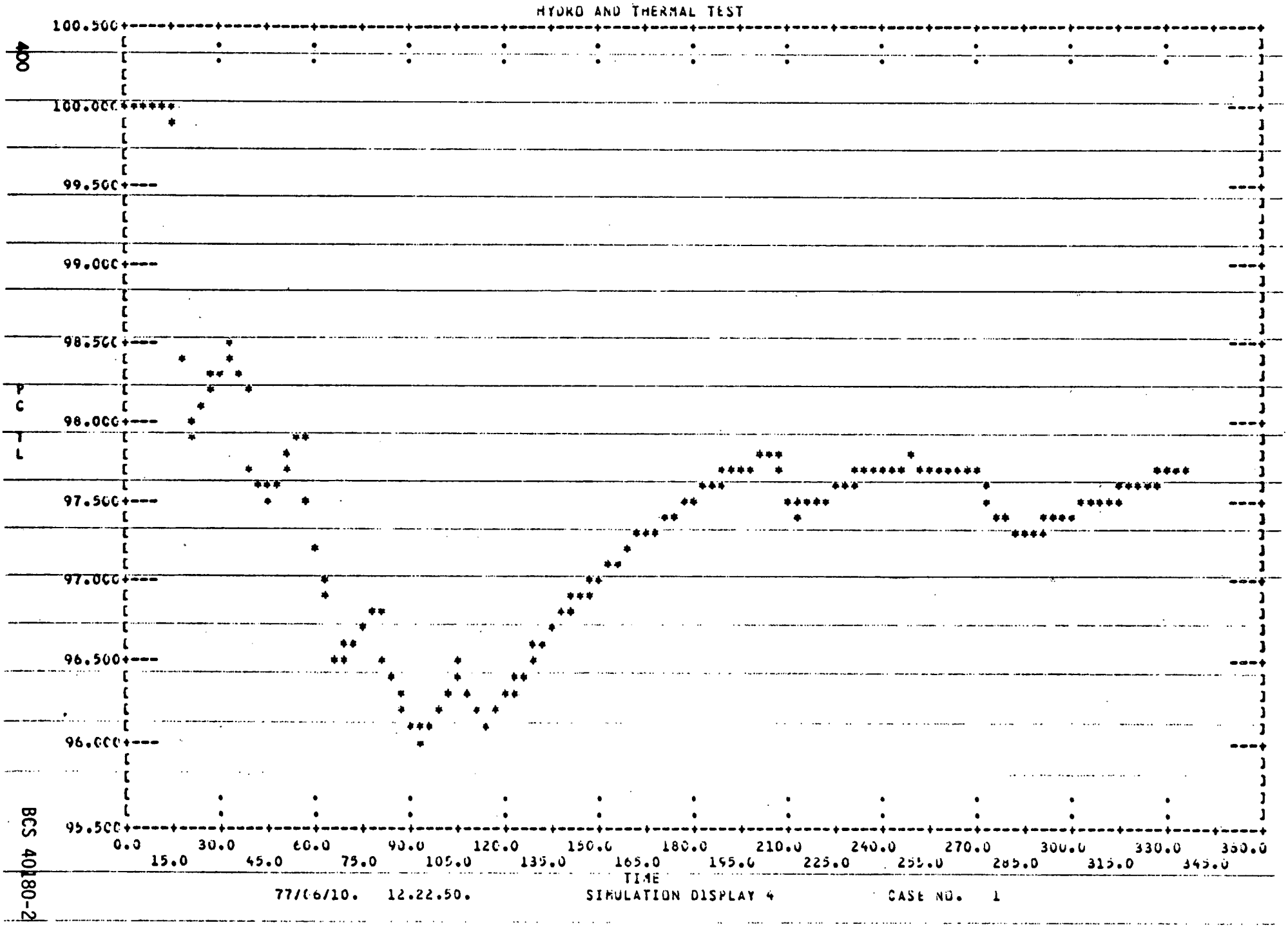

FIGURE 8.4-8 PERCENT CUMULATIVE THERMAL LOAD DELIVERED

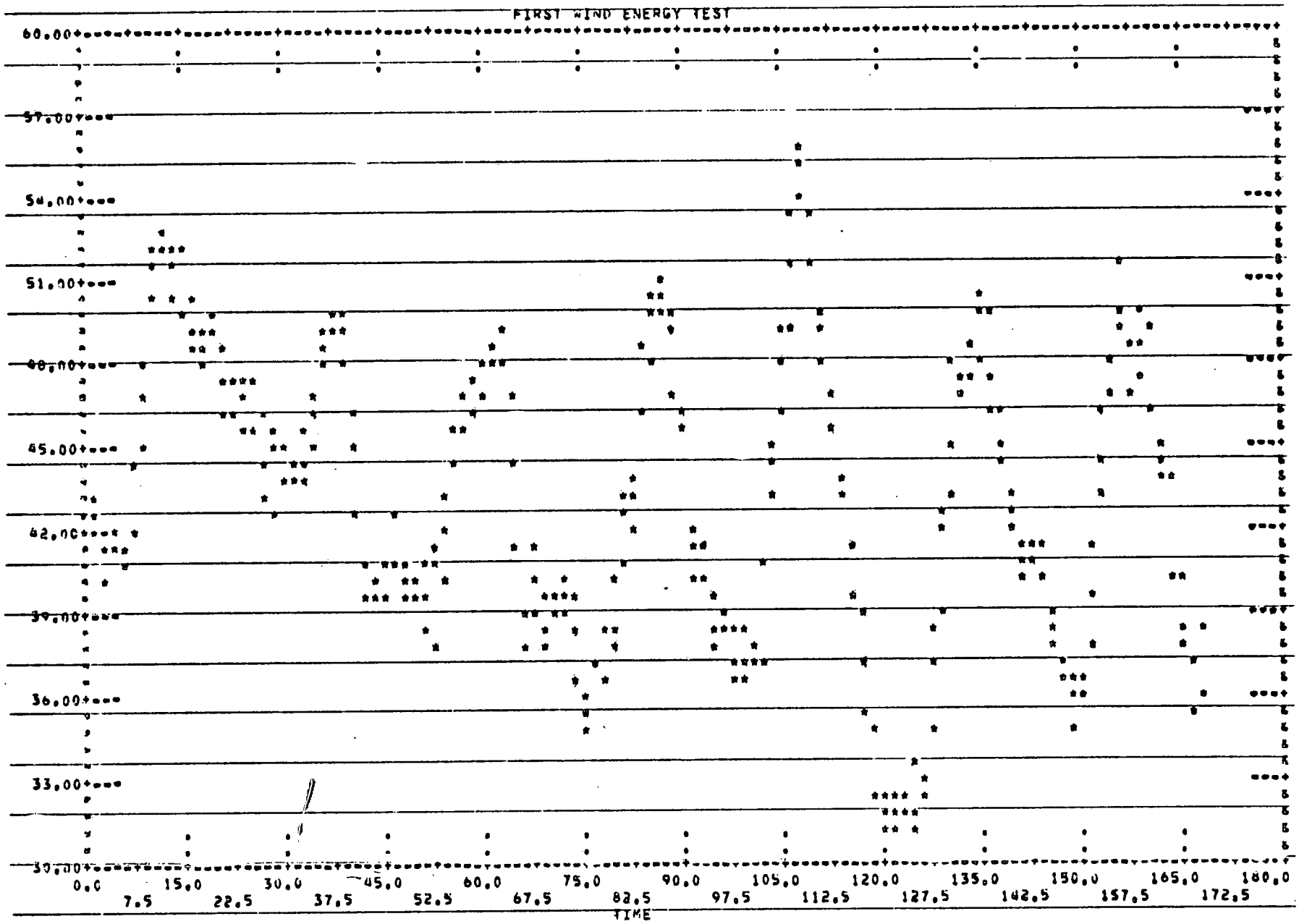

FIGURE 8.4-9 AMBIENT TEMPERATURE SIMULATION OVER ONE WEEK

8.5 PNEUMATIC STORAGE MODEL

Figure 8.5-1 shows the simplified schematic for the pneumatic storage model. For simplicity the motor and generator have been omitted from the pneumatic storage subsystem. A burner is used if needed to heat the exiting air to the turbine. The heat exchanger has a phase change medium. Figure 8.5-2 shows the input data for this model.

```
MODEL DESCRIPTION        PNEUMATIC STORAGE TEST CASE
LOCATION= 1      TI
LOCATION=21      WD        INPUTS=TI
LOCATION=51      WP        INPUTS=WD
LOCATION= 5      TP        INPUTS=TI
LOCATION=43      PD        INPUTS=WP,WP(P=WP),PA(1,1),PI(2,2),CS(RE=RE,2)
LOCATION=64      UT        INPUTS=PD(SP=P)
LOCATION=15      CO        INPUTS=PD(2,1),TP
LOCATION=17      HX        INPUTS=CO,TP,CS
LOCATION=47      CS        INPUTS=HX,PA(RE,2=RE)
LOCATION=36      PI        INPUTS=CS
LOCATION=49      HY        INPUTS=CS,HX
LOCATION=59      BN        INPUTS=HY
LOCATION=80      TU        INPUTS=BN,TP,CS(PR=PS)
LOCATION=76      PA        INPUTS=TU(2,2),LO(1,0),PI(4,2),UT(2,3)
LOCATION=72      LO        INPUTS=TI
LOCATION=71      CM
END OF MODEL
LIST STANDARD COMPONENTS
PRINT
```

FIGURE 8.5-2 PNEUMATIC STORAGE MODEL INPUT DATA

The input data for a two week simulation is shown in 8.5-3. In order to keep the air entering the storage cavern from overheating,a fairly large leakage coefficient (NU = 0.01) is assumed. Hence the storage cavern loses about 2/3 of its heat energy every four days. The load constant NC LO can be adjusted to balance wind energy to the load so that weekly air mass flow in and out of the cavern is balanced. The initial values for the CS and HX states were chosen on the basis of an earlier one week simulation. Figures 8.5-4 to 8.5-8 show results of this simulation. Figure 8.5-4 shows the average temperature of the heat exchanger storage medium for the 'cool' cell. The initial

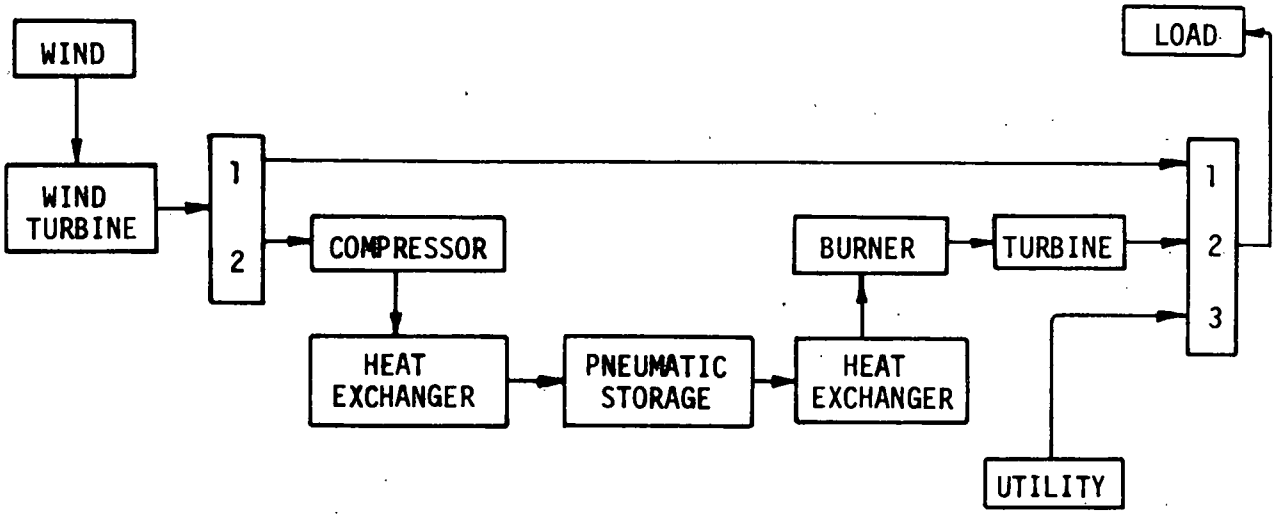

FIGURE 8.5-1: PNEUMATIC STORAGE EXAMPLE

```
TITLE= PNEUMATIC STORAGE TEST CASE2
PARAMETER VALUES
CYCLES=4.01,TO TI=0,CT TP=12,MN TP=0,STDTP=5,DLINES=100
V  WP=400,WV0WP=8,WV1WP=60,CC WP=16000,CM WP=1200,PS1PI=2.,EC WP=.2
LE CS=30,MDECS=10000,TEMCS=350,NU CS=.010,TM CS=125,BE HX=.001
MD CO=1500,T3 BN=600,LE BN=30,MDMBN=3000
ST HX=24,LE HX=30,PD HX=150,TMTHX=250,TEMHX=350,L  HX=8
MD CS=1500,TIDTU=600,RS TU=3600,CR CM=15,LE CM=30,CM CS=400
NC LO=.0043,CT LO=4,MN LO=0,STDLO=6,VE LO=.023
CB UT=.019,MP1UT=1.E8,CP UT=.023,CC UT=0,CM UT=0
TABLE,PW WP=10
8.10.12.14.16.18.20.21.=3.26.30
25.6,50.1,86.5,137.4,205.1,292.,400.6,500.,880.,880.
TABLE,PY WD=13
0.,4.33,8.67,13.,17.33,21.67,26.,30.33,34.67,39.,43.33,47.67,52.
65,67,68.65,61,56,51,49,49,52,56,61,65
TABLE,PD WD=7
0,4,8,12,16,20,24
10,12,14,16,14,12,10
TABLE,DF WD=16
0,1,2,3,4,5,6,7,8,9,10,11,12,13,14,15
5,44,160,380,480,512,440,376,307,270,148,76,40,22,9,3
TABLE,PD TP=9
0,3,6,9,12,15,18,21,24
46,45,48,55,62,62,56,48,46
TABLE,PY TP=5
0,13,26,39,52
40,50,75,65,40
TABLE,PD LO=17
0,1.5,3,4.5,6,7.5,9,10.5,12
13.5,15,16.5,18,19.5,21,22.5,24
450,360,372,330,450,660,810,798,804
690,708,699,702,750,708,570,450
TABLE,PW LO=7
1,2,3,4,5,6,7
1,1,.9,.9,.9,.6,.6
TABLE,PY LO=6
0,10,20,30,40,52
226,194,180,174,194,226
INITIAL CONDITIONS,E  CS=1250,MS CS=5.E5,EC1HX=1300,EC2HX=800
PRINTER PLOTS,DISPLAY1
M  CO,VS,TIME
T2 CO,VS,TIME
T2 HX,VS,TIME
TS1HX,VS,TIME
P2 UT,VS,TIME
DISPLAY2
E  CS,VS,TIME
MS CS,VS,TIME
T2 CS,VS,TIME
M2 HY,VS,TIME
T  HY,VS,TIME
DISPLAY3,P2 TU,VS,TIME,TS2HX,VS,TIME
TINC=.5,TMAX=336.,PRATE=6 ,PRINT CONTROL=3,INT MODE=3,OUTRATE=4
SIMULATE
```

FIGURE 8.5-3 PNEUMATIC STORAGE SIMULATION DATA

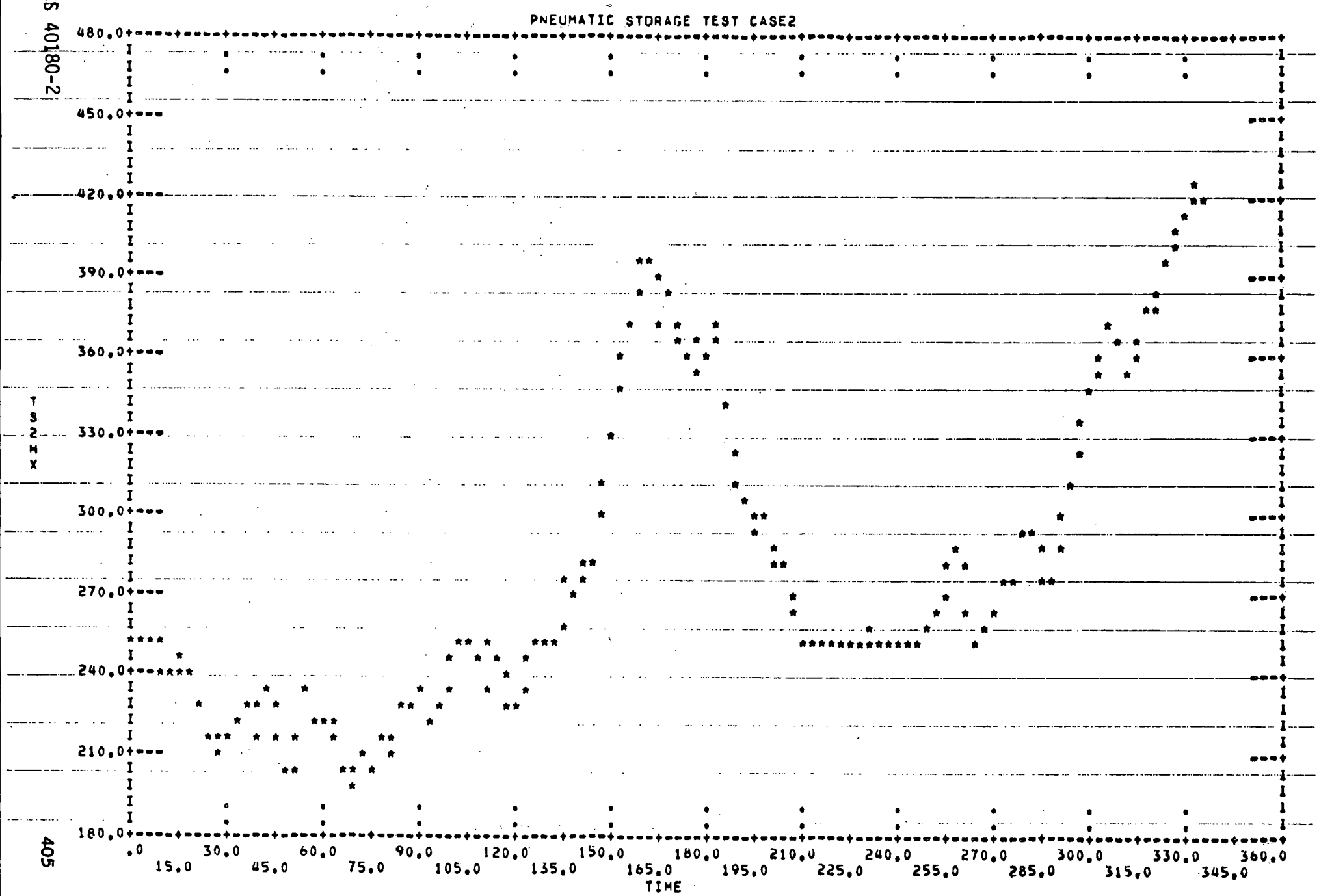

FIGURE 8.5-4 AVERAGE TEMPERATURE IN HEAT EXCHANGER CELL 2

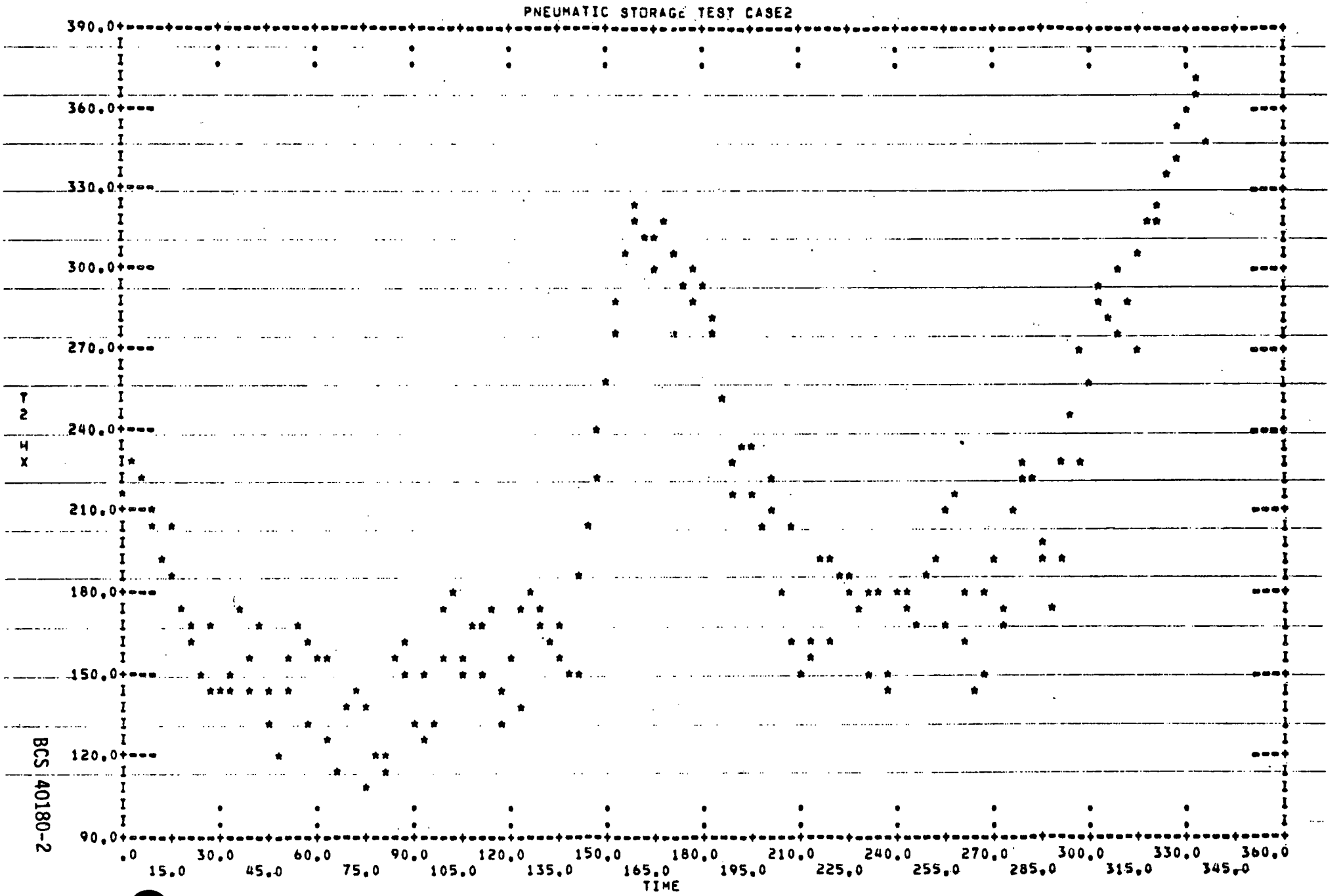

FIGURE 8.5-5 HEAT EXCHANGER OUTLET TEMPERATURE (CHARGING)

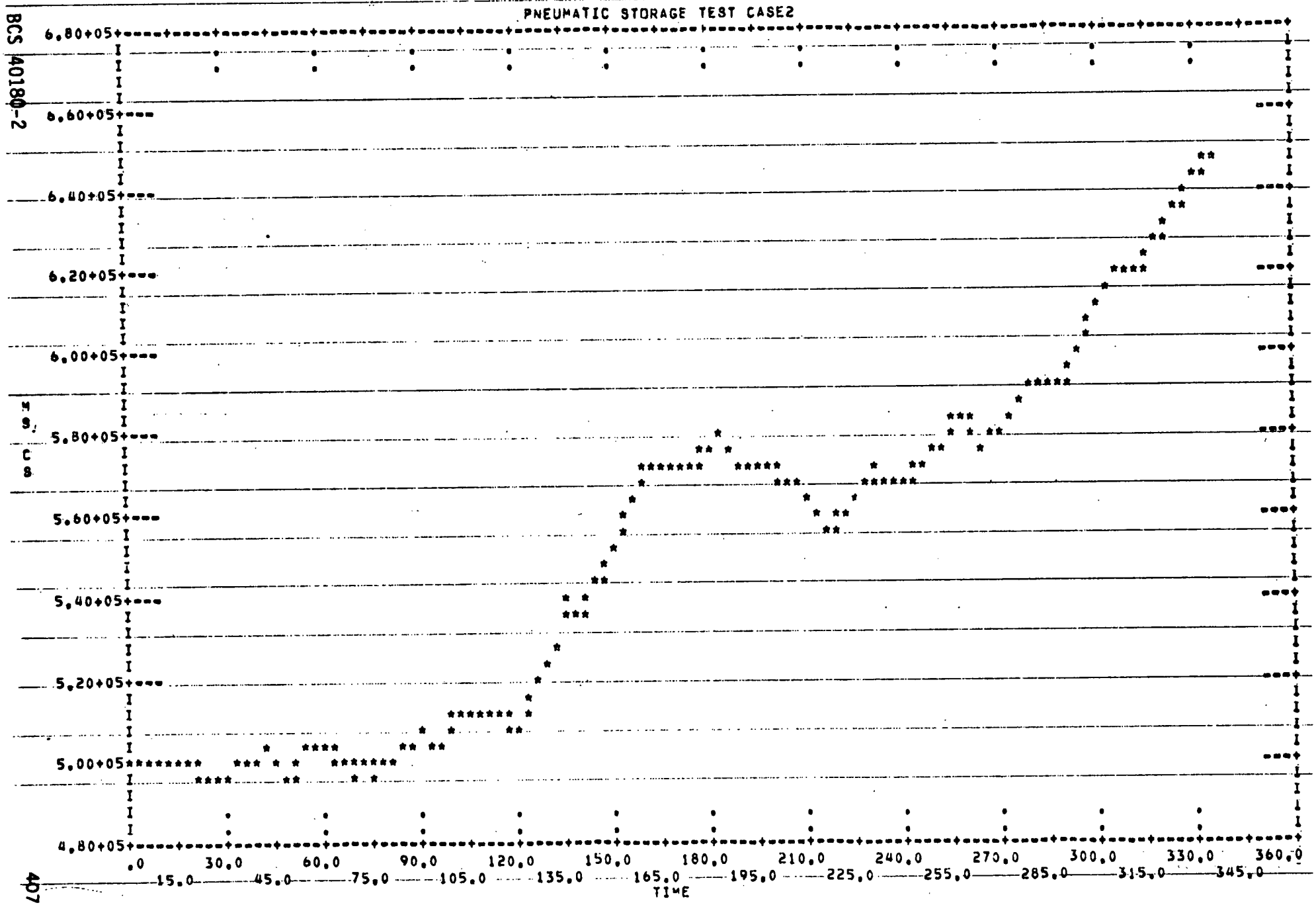

FIGURE 8.5-6 AIR MASS IN PNEUMATIC STORAGE

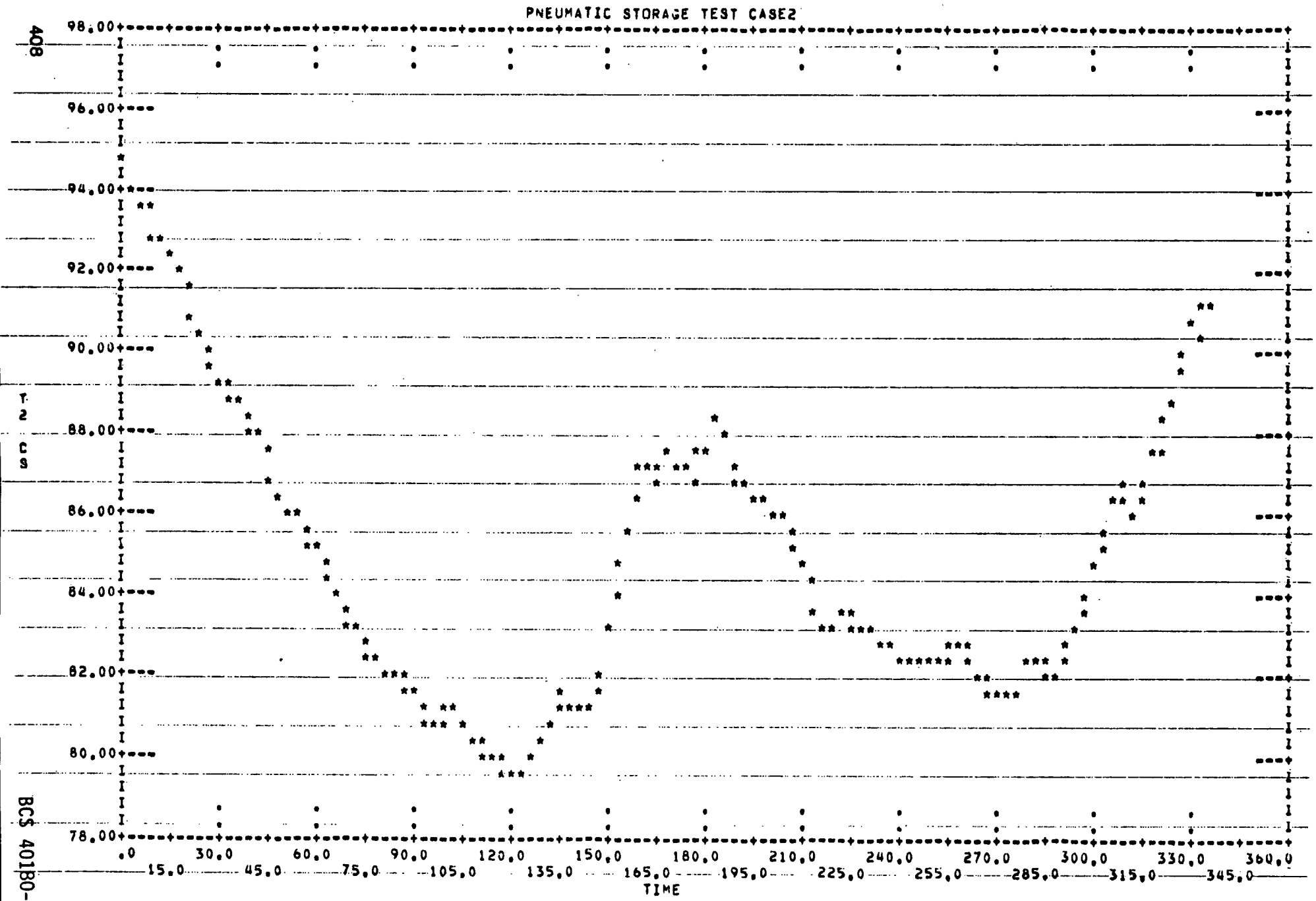

FIGURE 8.5-7 AIR MASS TEMPERATURE IN PNEUMATIC STORAGE VESSEL

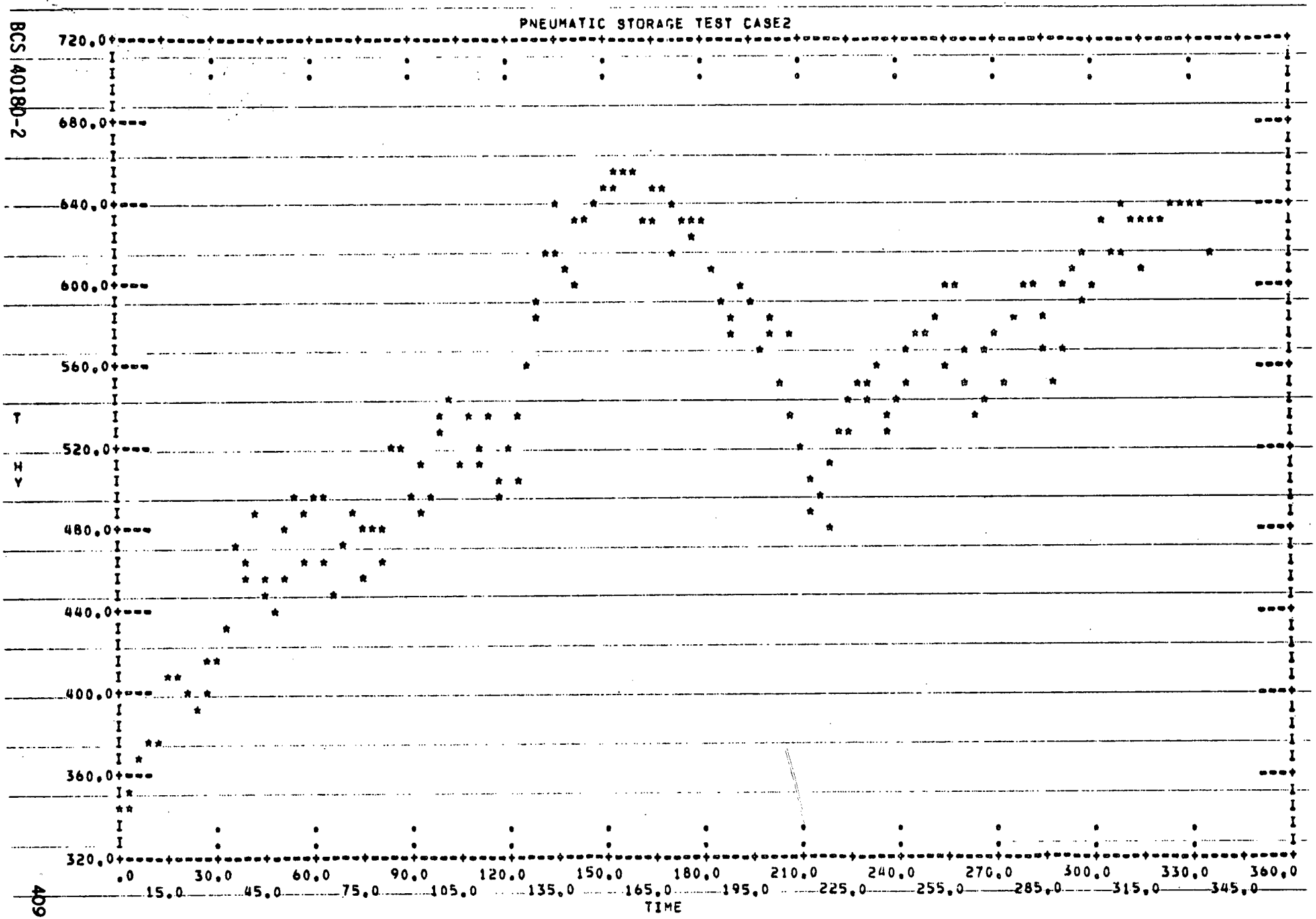

FIGURE 8.5-8 HEAT EXCHANGER OUTLET TEMPERATURE (DISCHARGING)

temperature at the beginning of the week is a little too cool since the temperature rises to about 400° during the weekends. Phase change in this medium is indicated by the constant temperature intervals at 250°. Figure 8.5-5 shows the air temperature exiting from the heat exchanger into the cavern. During the week this temperature is generally held below 200° but may exceed 350° during the weekend. Figure 8.5-6 shows the air mass stored in the cavern. In this simulation wind power generated exceeded that of the load and thus there is a gradual buildup of air mass in the cavern. The temperature of the stored air mass is shown in Figure 8.5-7. There is about a 10° fluctuation in temperature each week in this case. The last figure, 8.5-8 shows the air temperature exiting from the heat exchanger to the burner. Neglecting the influence of the initial conditions, the average temperature is about 550° and thus a burner is probably not required for this system.

☆USGPO: 1978 — 757-139/6320 Region 5-11