ANL-6192
Reactor Technology
(TID-4500, 16th Ed.)
AEC Research and
Development Report

ARGONNE NATIONAL LABORATORY
9700 South Cass Avenue
Argonne, Illinois

HAZARDS SUMMARY REPORT ON THE JUGGERNAUT REACTOR

by

J. R. Folkrod, D. P. Moon, and J. K. Saluja

Reactor Engineering Division

February 1961

Operated by The University of Chicago
under
Contract W-31-109-eng-38

DISCLAIMER

This report was prepared as an account of work sponsored by an agency of the United States Government. Neither the United States Government nor any agency Thereof, nor any of their employees, makes any warranty, express or implied, or assumes any legal liability or responsibility for the accuracy, completeness, or usefulness of any information, apparatus, product, or process disclosed, or represents that its use would not infringe privately owned rights. Reference herein to any specific commercial product, process, or service by trade name, trademark, manufacturer, or otherwise does not necessarily constitute or imply its endorsement, recommendation, or favoring by the United States Government or any agency thereof. The views and opinions of authors expressed herein do not necessarily state or reflect those of the United States Government or any agency thereof.

DISCLAIMER

Portions of this document may be illegible in electronic image products. Images are produced from the best available original document.

TABLE OF CONTENTS

	Page
I. SUMMARY	7
II. DESCRIPTION OF FACILITY	12
A. Site	12
B. Buildings	15
C. Reactor Components	15
1. Internal Thermal Column	20
2. Core	20
3. Reactor Vessel	22
4. Control Rods	22
5. Reflector	22
6. Thermal Shield	23
7. External Thermal Columns	23
8. Shielding	23
9. Coolant System	23
10. Startup Source	26
11. Fuel Handling	26
D. Experimental Facilities	27
1. Vertical Facilities	27
2. Horizontal Facilities	29
3. Scope of Research Programs	30
E. Supporting Physics Calculations	31
1. Procedures and Assumptions	31
a. Reactor Geometry	31
b. Two-group Constants	32
c. Reactivity Effects	33
2. Summary and Analysis of Results	34
a. Neutron Flux	34
b. Nuclear Characteristics	34
c. Operational Lifetime of Core	40
F. Controls and Instrumentation	41
1. Control Rods and Drive Mechanisms	41
a. Control Rods	41
b. Worth of Control Rods	42
c. Drive Mechanisms	42

TABLE OF CONTENTS

Page

2. Water Moderator-Reflector; Shutdown by Water Dump 44
3. Instrumentation. 45
   a. Nuclear. 45
   b. Radiation Monitoring System. 47
   c. Plant Parameters - Shutdown and Alarm System . . 48

III. OPERATIONAL PROCEDURES. 51

A. Supervision 51

B. Initial Fuel Loading 51

C. Normal Startup. 53

D. Normal Shutdown. 55

E. Emergency Shutdown 55

IV. REACTOR SAFETY EVALUATION 56

A. Improper Fuel Loading. 56

B. Startup Accident 58

C. Loss of Cooling Water 58

D. Sudden Introduction of Cold Water into Core. 59

E. Power Failure 59

F. Shim or Safety Rod Failure. 60

G. Malfunction of Dump Valve 60

H. Misuse or Failure of Experimental Facilities. 60

I. Excessive Pressure. 62

J. Instrument Failure 62

K. Earthquake. 62

L. Sabotage 62

M. Argon Activity 63

N. Hazards of Fission Product Releases to the Atmosphere 63

   1. Bases of Evaluation. 63
   2. Inhalation Hazards. 64
   3. Ingestion Hazards 65
   4. External Radiation Hazards. 65

TABLE OF CONTENTS

	Page
APPENDICES	67
A. Extrapolation of SPERT-I Data Pertinent to Nuclear Excursions in JUGGERNAUT	67
B. Removal of Core Decay Heat following Emergency Shutdown	70
C. Radiation Damage to Graphite	74
D. Proposed Programmatic Studies	76
ACKNOWLEDGMENTS	77
REFERENCES	77

LIST OF FIGURES

No.	Title	Page
1	JUGGERNAUT Reactor	7
2	Regional Map Showing Location of JUGGERNAUT Reactor Site	12
3	Metropolitan Area Surrounding Laboratory Site	13
4	Population Density	14
5	Plan Views of Reactor Building Complex (Building 335)	16
6	Elevation Along North-South Axis of Reactor	17
7	Elevation Along East-West Axis of Reactor, with Fuel Transfer Coffin Positioned above Core	18
8	Plan View of Experimental Facilities and Shield Plugs	19
9	JUGGERNAUT Fuel Assembly	21
10	JUGGERNAUT Flow Diagram	24
11	Fuel Plate Operating Temperatures	25
12	JUGGERNAUT Section at 63.5-cm Elevation	28
13	Typical Horizontal Beam Hole and Shield Gate Installation	30
14	Thermal Neutron Flux at 100 kw with All Control Rods Withdrawn	35
15	Fast Neutron Flux at 100 kw with All Control Rods Withdrawn	36
16	Two-Group Thermal Adjoint Flux with All Control Rods Withdrawn	37
17	Two-Group Fast Adjoint Flux with All Control Rods Withdrawn	38
18	Variation in k_{eff} with $H:U^{235}$ Ratio as Effected by Number of Plates per Fuel Assembly	38
19	Orientation of Control Rods	41
20	Window-shade Drive Mechanism for Shim and Safety Control Rods	42
21	Rack-and-pinion Drive Mechanism for Fine Control Rod	44
22	Nuclear Instrumentation and Radiation Monitoring Circuitry	46
23	Ranges of Nuclear Instrumentation	47
24	Thermal Characteristics of Insulated Core upon Loss of Coolant	73

LIST OF TABLES

No.	Title	Page
I	Summary of JUGGERNAUT Design and Operating Characteristics	8-10
II	Approximate Maximum Neutron Fluxes in Vertical Facilities	29
III	Two-group Nuclear Constants	32
IV	Summary of Nuclear Characteristics	39
V	Negative Reactivity Effects at Full Power	40
VI	Calculated Worths of Control Rods with Beam Holes Devoid of Experiments	42
VII	Summary of Plant Parameters - Shutdown and Alarm System	48
VIII	Reactivity Changes Associated with Movement of Graphite Components and Beam Hole Plugs	61
IX	Comparison of SPERT and JUGGERNAUT Parameters	68

HAZARDS SUMMARY REPORT ON THE JUGGERNAUT REACTOR

by

J. R. Folkrod, D. P. Moon, and J. K. Saluja

I. SUMMARY

The JUGGERNAUT (Fig. 1) is a light-water-cooled and moderated, graphite-reflected, heterogeneous thermal reactor at Argonne National Laboratory. The reactor is designed to provide experimental facilities for the conduct of basic research in the neutron flux range up to 4×10^{12} n/(cm^2)(sec) at an operating power level of 250 kw. The pertinent design and operating characteristics are summarized in Table I.

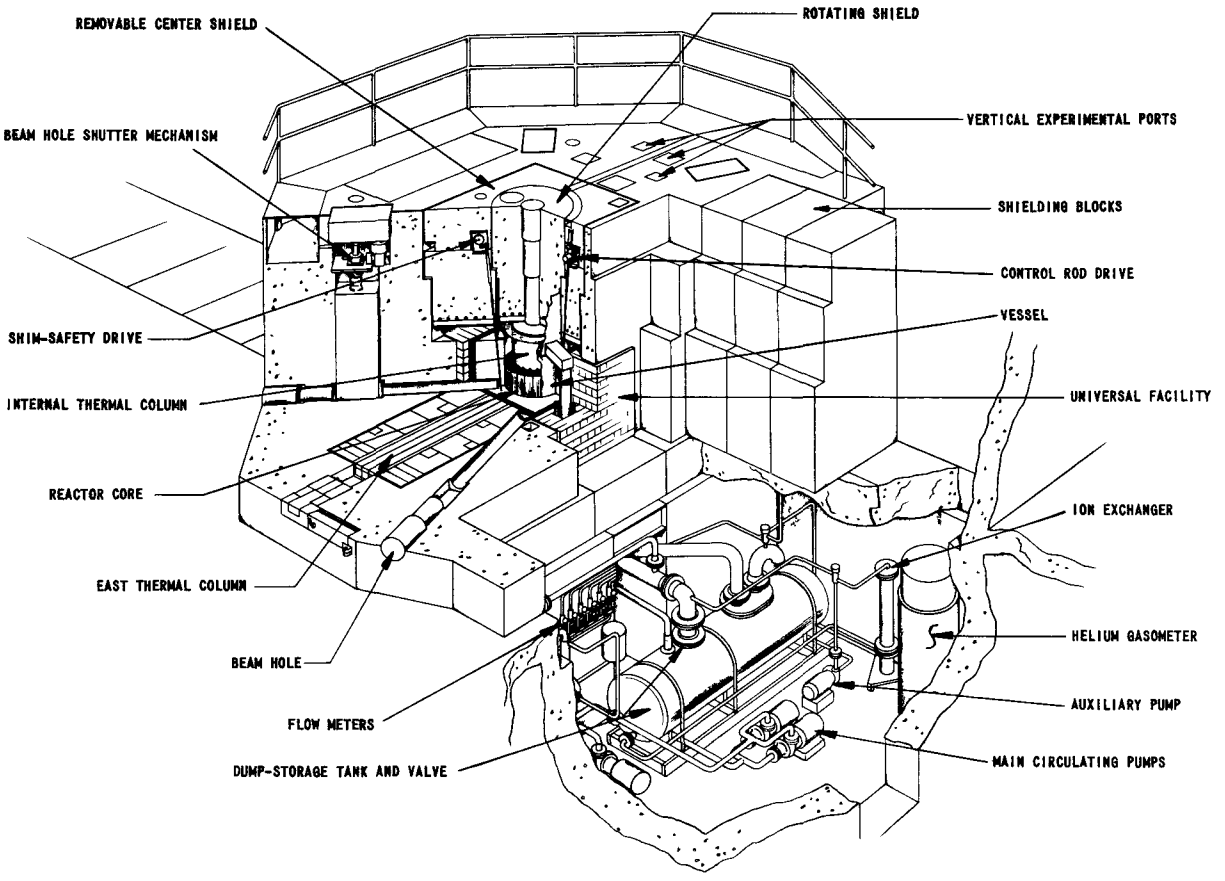

FIG. 1
JUGGERNAUT REACTOR

This report evaluates potential hazards posed by certain hypothetical major accidents during the course of reactor operation, and the adequacy of the safeguards provided to ensure that the health and safety of personnel, within and beyond the site boundary, are not unduly endangered.

The results indicate that in the event of any conceivable reactivity increase, auxiliary and inherent safety features peculiar to the JUGGERNAUT will operate to ensure automatic shutdown through a nondestructive BORAX-type process.

Table I

SUMMARY OF JUGGERNAUT DESIGN AND OPERATING CHARACTERISTICS

Power level	250 kw (t)
Pressure	Atmospheric
Coolant-moderator	H_2O
Core (annular)	
Inside diameter	46 cm
Outside diameter	61 cm
Active height	57.2 cm
Fuel assemblies	
Total number	20
Fuel plates per assembly (max)	12
Plate dimensions	66 x 7.3 x 0.178 cm
Fuel composition	15.2 w/o U, 84.8 w/o Al
Thickness of "meat" in plate	0.102 cm
Fuel enrichment	93% U^{235}
Cladding (1245 aluminum)	0.038 cm
Control Rods	
Configuration	Blade
Number	
Shim	3
Safety	4
Fine control	1
Dimensions	
Shim-safety rods	48 x 17.8 x 0.274 cm
Fine control rod	29.2 x 2.54 x 0.020 cm
Material	
Shim-safety rods	2 w/o natural boron-steel
Fine control rod	Cadmium

Table I (Cont'd.)

Control Rod Drives	
Shim-safety rods	Window-shade type
Rate of withdrawal (max)	0.30 cm/sec
Rate of reactivity addition	0.01 (% $\Delta k/k$)/sec
Total travel	50 cm
Scram time	0.5 sec
Fine control rod	Rack and Pinion
Rate of withdrawal (max)	0.33 cm/sec
Rate of reactivity addition	<0.003 (%$\Delta k/k$)/sec
Total travel	20 cm
Reactor Vessel (two welded sections)	
Inside diameter	
Upper section	74.6 cm
Lower section	61 cm
Overall height	196 cm
Wall thickness	0.48 cm
Material	5052-H34 aluminum
Nuclear Data	
Neutron flux	
Thermal (max)	4.0×10^{12} n/(cm^2)(sec)
Thermal (core average)	1.7×10^{12} n/(cm^2)(sec)
Fast (max)	7.0×10^{12} n/(cm^2)(sec)
Fast (core average)	5.2×10^{12} n/(cm^2)(sec)
Minimum critical mass	3.1 kg U^{235}
Maximum loading (~7% k_{ex})	4.0 kg U^{235}
Fuel consumption	62 gm/yr
Average H^1:U^{235} atom ratio	380
Average H_2O:Al volume ratio	2.93
Average void coefficient of reactivity	-0.15 (% $\Delta k/k$)/% void
Average prompt temperature coefficient of reactivity (20° to 65°C)	-0.015 (% $\Delta k/k$)/°C
Reactivity effect of equilibrium xenon at 250 kw	-0.80% $\Delta k/k$
Maximum excess reactivity controlled by shim rods	4.7% Δk
Combined worth of shim-safety rods	7.5% Δk

Table I (Cont'd.)

Heat Transfer and Fluid Flow

Total coolant volume	600 liters
Coolant volume in core	56 liters
Maximum coolant flow (250 kw)	7.9 liters/sec
Coolant velocity in fuel channel	8.2 cm/sec
Inlet coolant temperature	~32°C
Average power density in core coolant	4.5 kw/liter
Average heat flux	1.73 watt/cm^2
Average surface temperature of fuel plates	69°C

The maximum core loading contains 4.0 kg U^{235} disposed in 20 plate-type fuel assemblies to provide an initial excess reactivity of 7.0% Δk in the cold clean condition. However, the excess reactivity in a typical core loading will approximate 4.5% Δk, a value that can be controlled by three of seven boron-steel shim-safety rods. The combined worth of the seven shim-safety rods and one cadmium control rod was calculated to be 7.6% Δk.

The shim-safety rods are actuated independently through magnetic clutches by ARGONAUT-type window shade-drive mechanisms. The drives have been modified and improved as a consequence of long-term performance tests. All rods drive to positions of minimum reactivity in the core region.

Solid neutron absorber control is augmented by system safety interlocks that energize a solenoid-operated, air-assisted, dump valve to effect removal of the top water reflector (worth 1% $\Delta k/k$) in 2 sec.

The JUGGERNAUT is self-limiting to nuclear excursions prompted by step reactivity inputs up to 3.0% $\Delta k/k$. This self-limiting feature is attributed to a large negative void coefficient of reactivity [-0.15% ($\Delta k/k$)/% void], a prompt negative temperature coefficient of reactivity [-0.019% ($\Delta k/k$)/°C at 65°C], and a long prompt neutron lifetime (2.0×10^{-4} sec).

Rigorous safety reviews are prerequisite to the conduct of experiments. System controls and safety interlocks compel strict adherence to the prescribed sequence of pre- and post-startup operations.

The maximum rate of withdrawal of any shim-safety rod (by a window shade-drive) is equivalent to the addition of reactivity at the rate of 0.01% ($\Delta k/k$)/sec. During startup operations, the core is initially filled with water (by an auxiliary pump) at a preset rate corresponding to a maximum addition of 0.025% ($\Delta k/k$)/sec.

The maximum excursion promoted by a purely hypothetical error in fuel loading would peak at a power level of 30 Mw, with a consequent total energy release of 20 Mw-sec and a maximum fuel plate surface temperature of 150°C. The melting point of the aluminum cladding is 650°C.

A major accident involving complete core meltdown and release of fission products was also evaluated. The accident was postulated to occur from a rapid reactivity increase of 6.3% $\Delta k/k$ after long-term reactor operation (16 hr/day) at 250 kw. The total fission energy produced by the postulated excursion is 130 Mw-sec. The total number of fissions would be 4×10^{18}.

Analyses showed that the hazard posed by the release of I^{131} formed during steady-state operation is greater than the hazard attributed to I^{131} generated during an excursion. Assuming a continuous plume (due to slow leakage from the reactor building) and a wind velocity of 2 m/sec, an observer 1600 m downwind of the building could accumulate as much as four times the maximum permissible concentration of I^{131} (for continuous exposure) in his thyroid gland. However, this concentration is only one-tenth of the maximum permissible one-shot exposure (2.4 μc I^{131} = 25 rem).

The maximum beta radiation dose sustained by an observer in the path of the plume would be 120 mr at 1600 m, and 400 mr at 1000 m from the reactor.

The maximum external gamma radiation doses calculated for the extreme case of a radioactive cloud moving 15 m/sec at ground level gave values of 100 mr at 800 m, and 30 mr at 1600 m from the reactor. Assuming instantaneous washout at 1600 m, an observer at this distance would suffer 4.0 rems γ and 45 rads β exposure.

II. DESCRIPTION OF FACILITY

A. Site

The site for the JUGGERNAUT is in the 300 area of Argonne National Laboratory, west of the EBWR (see Fig. 2). The geophysics pertinent to the Laboratory site have been compiled in a number of previous safeguard reports with only minor changes from year to year.[18]

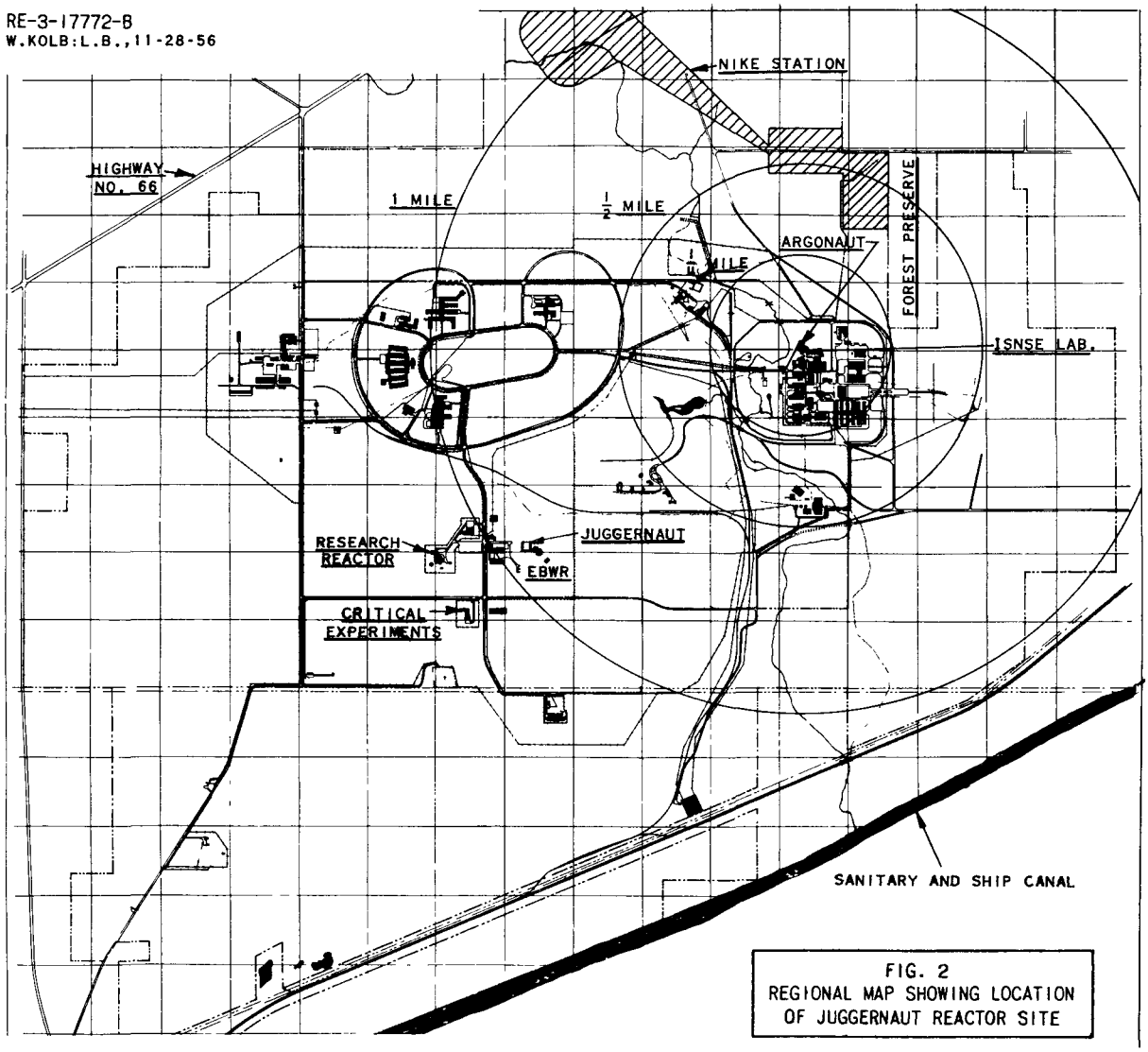

FIG. 2
REGIONAL MAP SHOWING LOCATION OF JUGGERNAUT REACTOR SITE

The nearest population center not under direct laboratory control is the Nike Station whose point of closest approach to the reactor is ~2.4 km. The next nearest population center (Lemont) is more than 3.2 km distant (see Figs. 3 and 4).

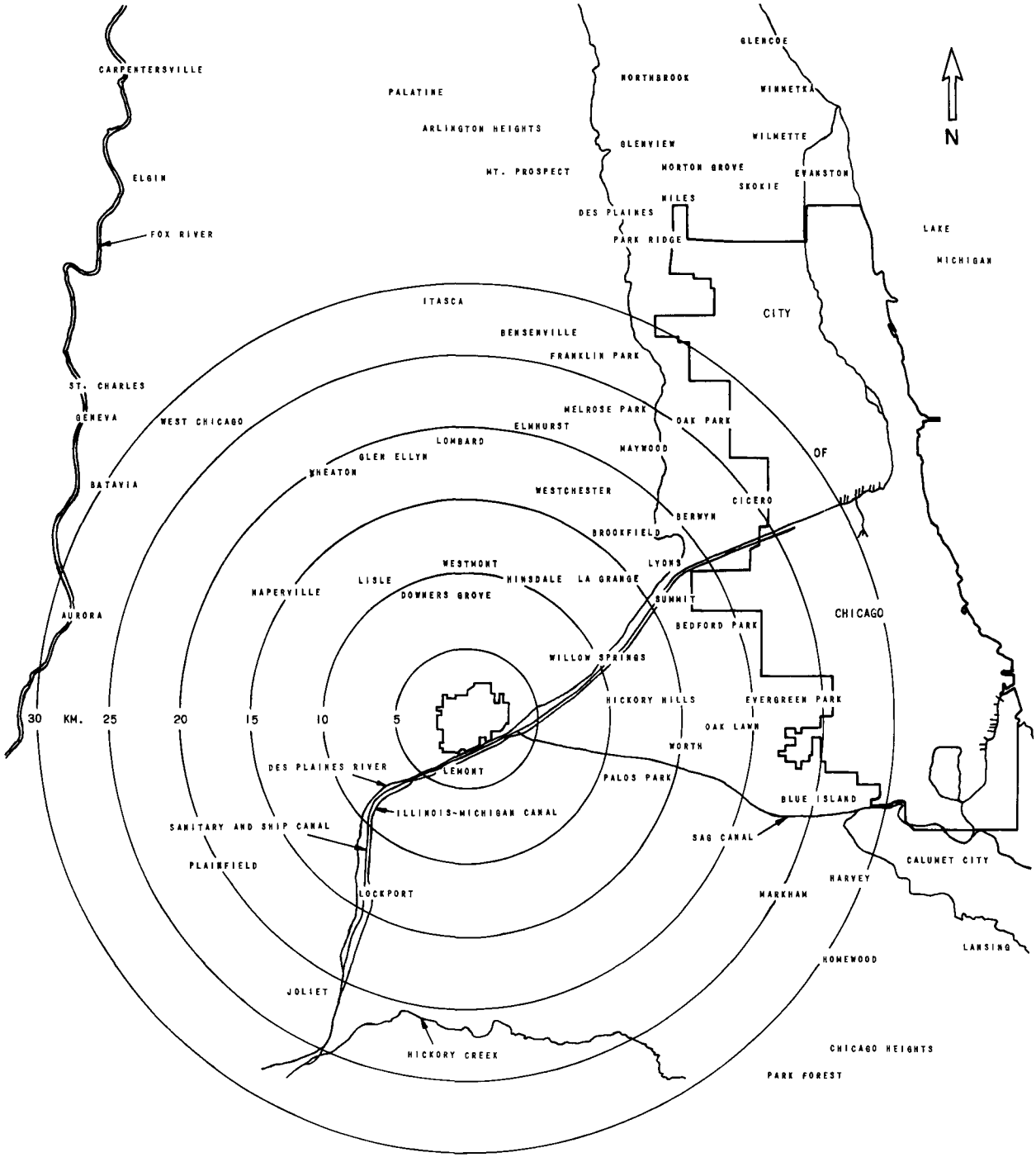

FIG. 3
METROPOLITAN AREA SURROUNDING LABORATORY SITE

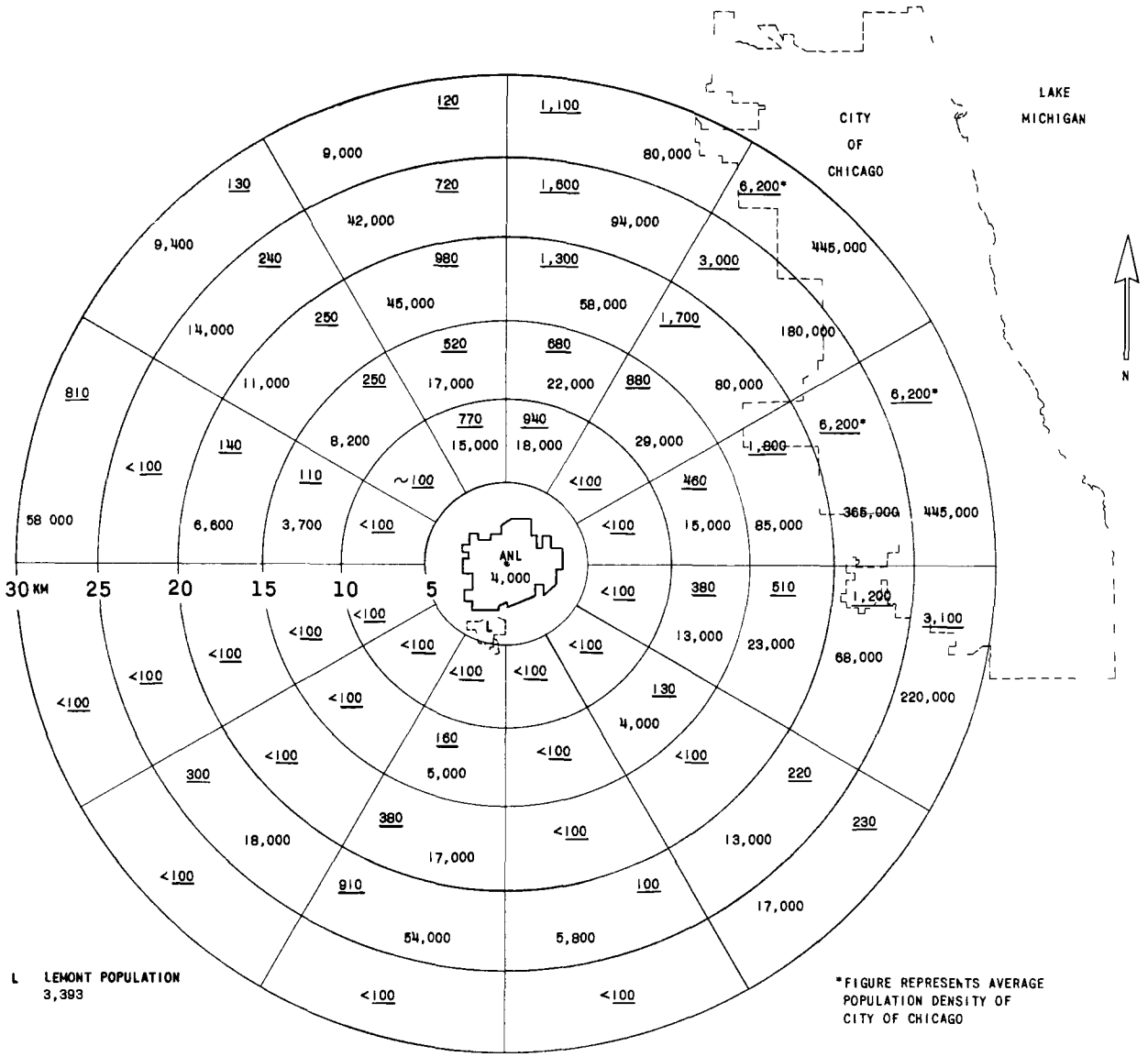

LEGEND

UNDERLINED FIGURE REPRESENTS AVERAGE POPULATION DENSITY IN PERSONS PER SQUARE KILOMETER

SECOND NUMBER REPRESENTS ESTIMATED TOTAL POPULATION OF SECTOR BASED ON 1960 CENSUS DATA

SECTOR AREAS

BOUNDARY RADII IN KILOMETERS	SECTOR AREA IN SQUARE KILOMETERS
0- 5	6 54
5-10	19 6
10-15	32 7
15-20	45 8
20-25	58 9
25 30	71 9

FIG. 4
POPULATION DENSITY

B. Building

The reactor is to be housed in a prefabricated metal structure (18 by 24 m) of standard design, which is adjacent to a conventional two-story brick structure (12 by 30 m). As shown in the plan views (Fig. 5), the brick structure houses the offices, shops, laboratories, and utilities.

Access between the metal and brick structures is provided by two personnel doors, one leading to the reactor work room floor, and the other leading to the control floor. A third personnel door and a freight door in the south wall of the reactor building provide direct access from outside to the work room floor level.

The capacity of the work room floor (14,700 kg/m^2) is adequate to support the load of the reactor and equipment that may be moved adjacent to the reactor.

The reactor building is serviced by an 18-meter span overhead travelling crane rated at 9 tonnes, and a 1-tonne auxiliary crane for lighter loads.

The reactor auxiliary systems are located in the subreactor room beneath the north reactor shield. The large equipment in the subreactor room can be serviced with the overhead crane by removing concrete biological shield blocks and floor slabs directly above the room.

Radioactive spent fuel is stored in a pit in the southeast corner of the work room floor. Fresh fuel will be stored in the CP-5 vault (Bldg. 330).

During normal reactor operation, the reactor building is ventilated by three power-driven roof exhaust fans. The air intake is through louvers in the east and west walls of the building. In the event of an emergency, the louvers and roof vents are closed by an emergency exhaust system actuated by the reactor operator. Building air is then exhausted to the atmosphere through high-efficiency filters. The subreactor room is vented by a small isolated blower system.

In addition to the normal site facilities and utilities, the building emergency lighting and ventilating systems are serviced by a diesel power system.

C. Reactor Components

The JUGGERNAUT (see Figs. 6 through 8), which is derived in concept from that of the ARGONAUT, features an internal (central) graphite thermal column and an annular core positioned within an aluminum vessel.

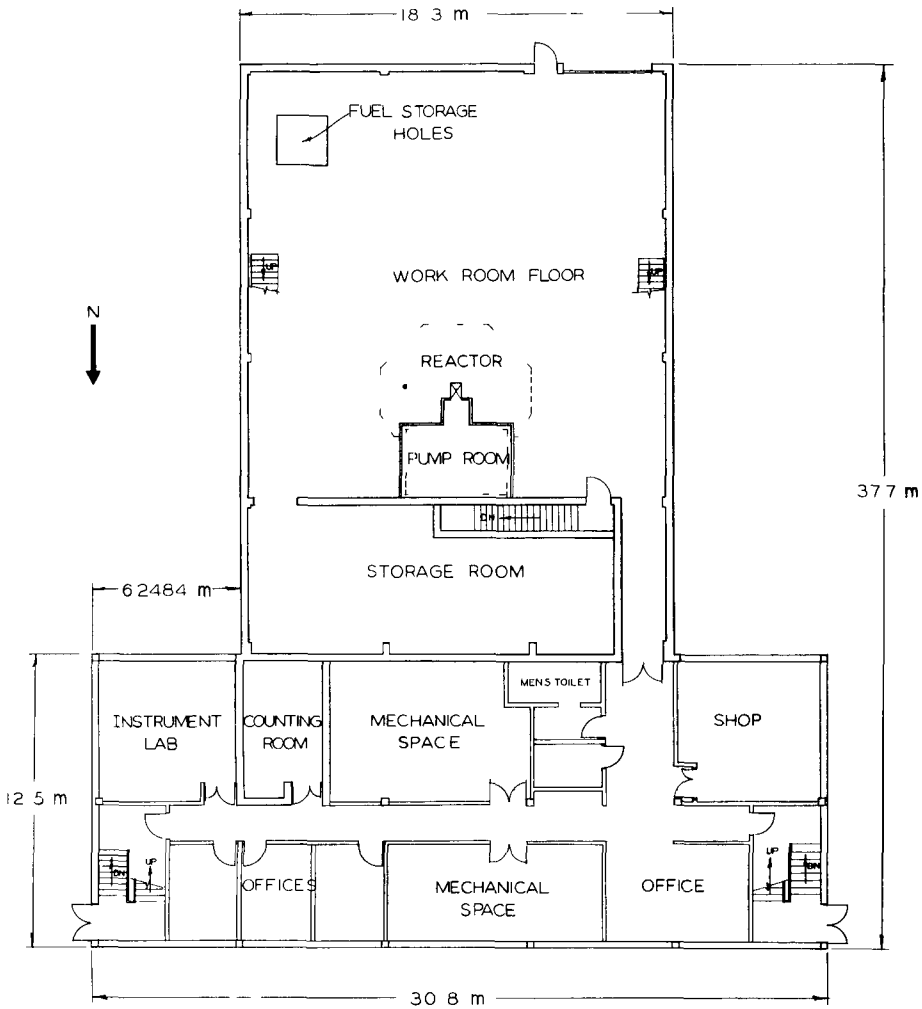

BASEMENT PLAN

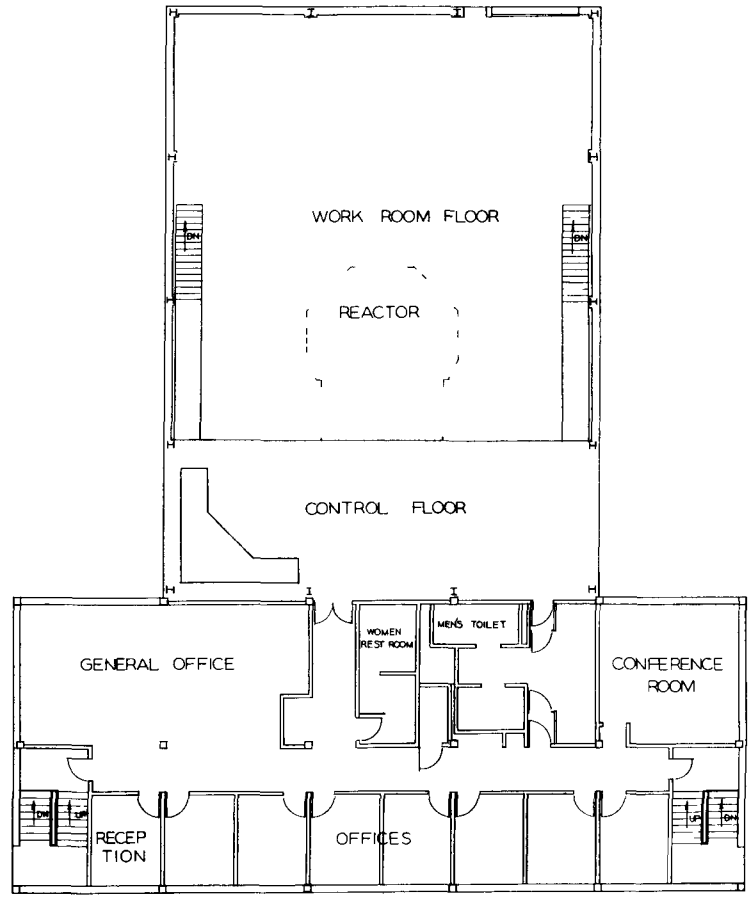

FIRST FLOOR PLAN

FIG 5
JUGGERNAUT REACTOR - BUILDING 335

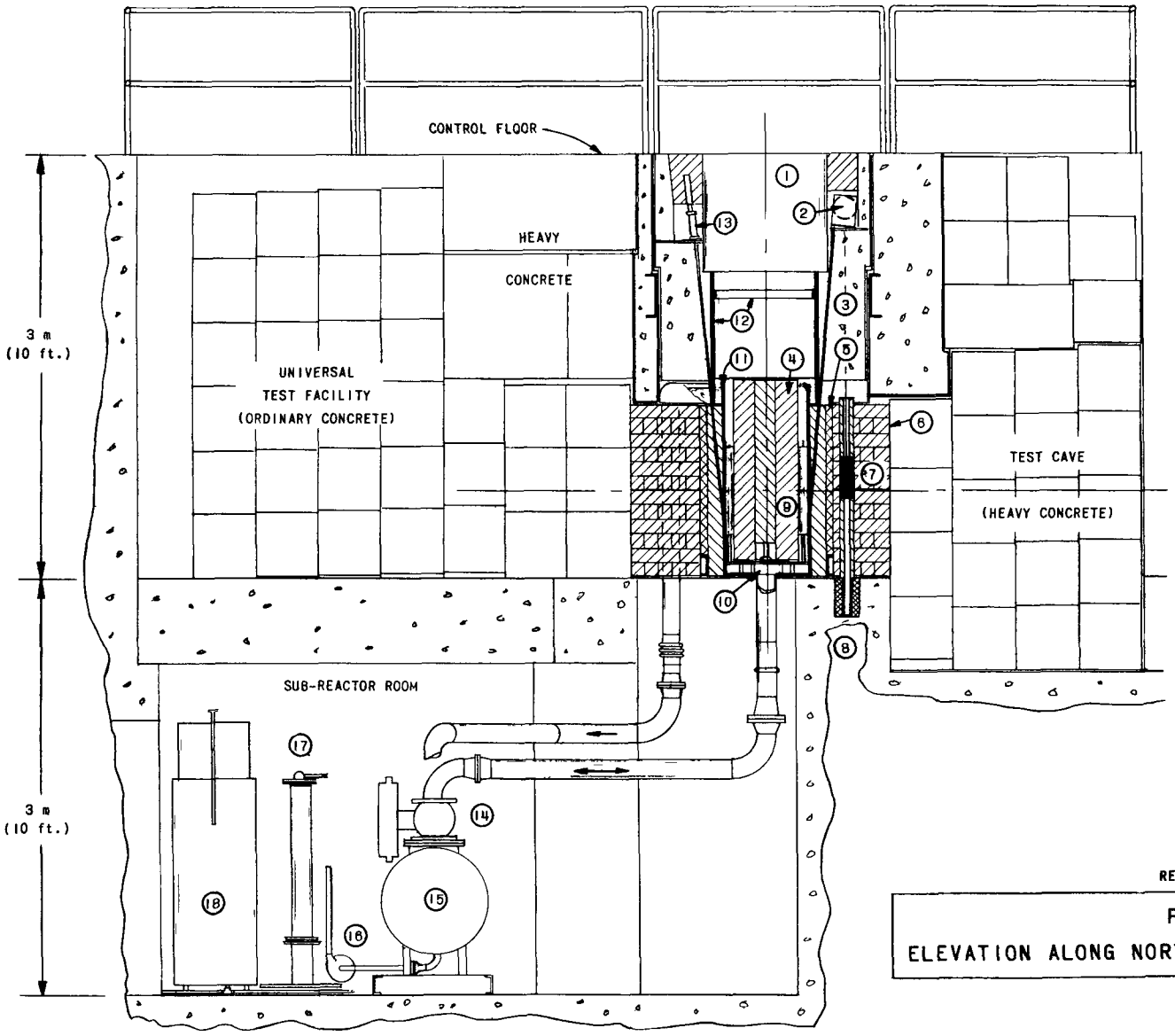

LEGEND

1. TOP ROTATING SHIELD PLUG
2. SHIM AND SAFETY ROD DRIVE
3. REMOVABLE CENTER SHIELD PLUG
4. INTERNAL GRAPHITE THERMAL COLUMN
5. WATER-COOLED LEAD THERMAL SHIELD
6. EXTERNAL GRAPHITE REFLECTOR
7. ANTIMONY-BERYLLIUM SOURCE
8. LEAD-SHIELDED SOURCE STORAGE
9. FUEL ASSEMBLY (CORE ANNULUS)
10. CORE SUPPORT GRID
11. WEIR
12. REACTOR VESSEL AND SEAL TUBE
13. FINE CONTROL ROD DRIVE
14. HYDROMATICS BALL DUMP VALVE
15. DUMP-STORAGE TANK
16. AUXILIARY PUMP
17. ION EXCHANGER
18. HELIUM GASOMETER

RE-1-31500-E

FIG. 6
ELEVATION ALONG NORTH-SOUTH AXIS OF REACTOR

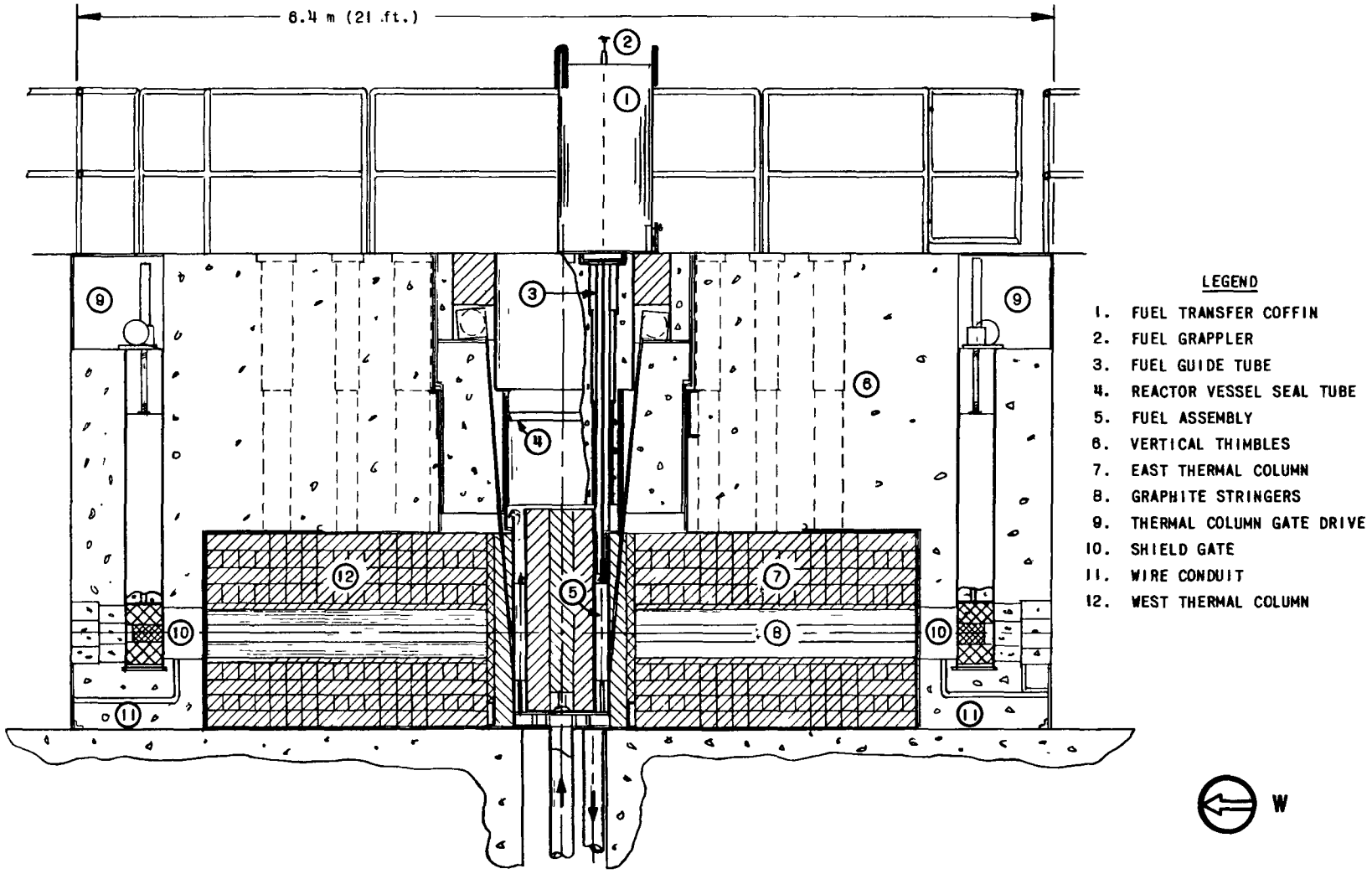

RE-1-31500-E

FIG. 7

ELEVATION ALONG EAST-WEST AXIS OF REACTOR WITH FUEL TRANSFER COFFIN POSITIONED ABOVE CORE

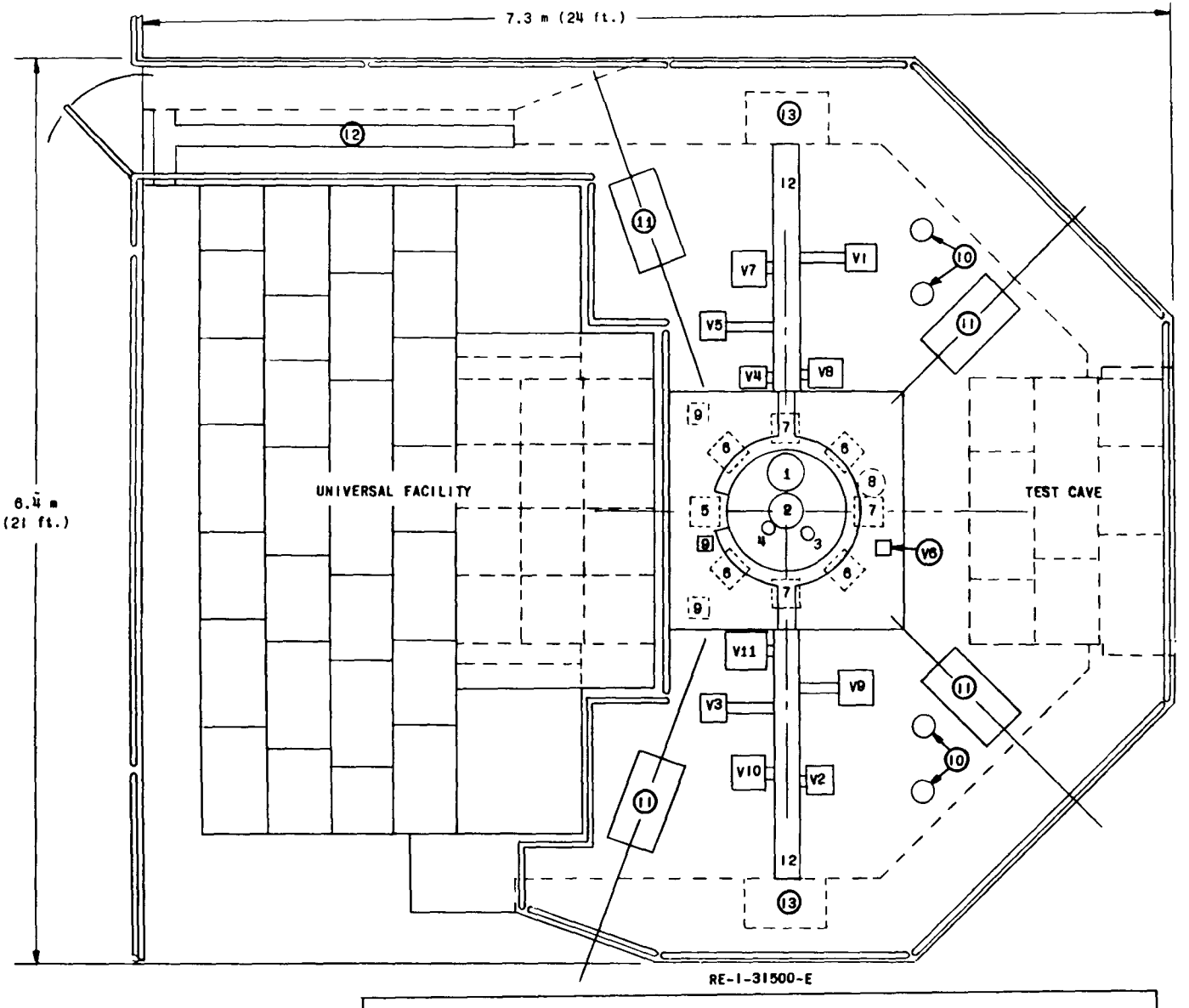

LEGEND

1. FUEL EXCHANGE PLUG
2-4. VERTICAL THIMBLES-INTERNAL THERMAL COLUMN
5. CONTROL ROD
6. SAFETY ROD
7. SHIM ROD
8. SOURCE DRIVE PLUG
9. NUCLEAR INSTRUMENT HOLES
10. STORAGE HOLES
11. BEAM HOLE GATE PLUGS
12. INSTRUMENT WIREWAY
13. THERMAL COLUMN GATE

NOTE: VERTICAL THIMBLE PLUGS V1 TO V11 LEAD TO EAST AND WEST THERMAL COLUMNS.

N

FIG. 8
PLAN VIEW OF EXPERIMENTAL FACILITIES AND SHIELD PLUGS

Extending radially outward from the vessel, the components include a primary graphite reflector, a water-cooled lead thermal shield, secondary graphite reflector, and the bulk biological shielding that houses the horizontal experimental facilities. Axially above the core, the components include a water reflector, a continuation of the water-cooled lead thermal shield, and removable concrete plugs and blocks that outline the various vertical experimental facilities.

1. Internal Thermal Column

The internal graphite thermal column (46 cm by 122 cm high) is canned in aluminum. The column houses three vertical holes that provide access for irradiations to the region of maximum thermal neutron flux [4×10^{12} n/(cm^2)(sec)]. One hole (15 cm ID) is in the center, the second is on a radius of 11.4 cm, and the third (4.4 cm ID) is on the perimeter of the cylinder. Access to the internal thermal column is from above the reactor by removal of concrete shield plugs.

2. Core

The annular core (46 cm ID and 61 cm OD) and support structure are designed to accommodate a maximum loading of 20 fuel assemblies with an active height of 57.2 cm.

Each fuel assembly (Fig. 9) is made up of 12 picture frame-type plates with spacer buttons, and aluminum tubular end fittings. The active region of each plate contains 16.7 gm U^{235} (93% enrichment) clad in aluminum (0.038 cm thick). It will be possible to use plates containing up to 20 gm U^{235} without causing local overheating.

The fuel assemblies are aligned and supported by insertion of the bottom end fittings into guide tubes arranged on an aluminum grid. The grid is positioned by pins that project up from the bottom of the reactor vessel. The upward flow of coolant through the fuel assemblies is sufficiently low (8.2 cm/sec) that no hold-down mechanism is required.

The core loading can be varied by replacing the active fuel plates with dummy aluminum counterparts. The cold clean critical mass is 3.1 kg U^{235}. The maximum loading (~ 7% k_{ex}) contains 4.0 kg U^{235}. However, the prescribed operating procedures will limit the core loading to a value (~3.8 kg U^{235}; 4.7% k_{ex}) that can be held subcritical by three of seven boron-steel shim-safety rods.

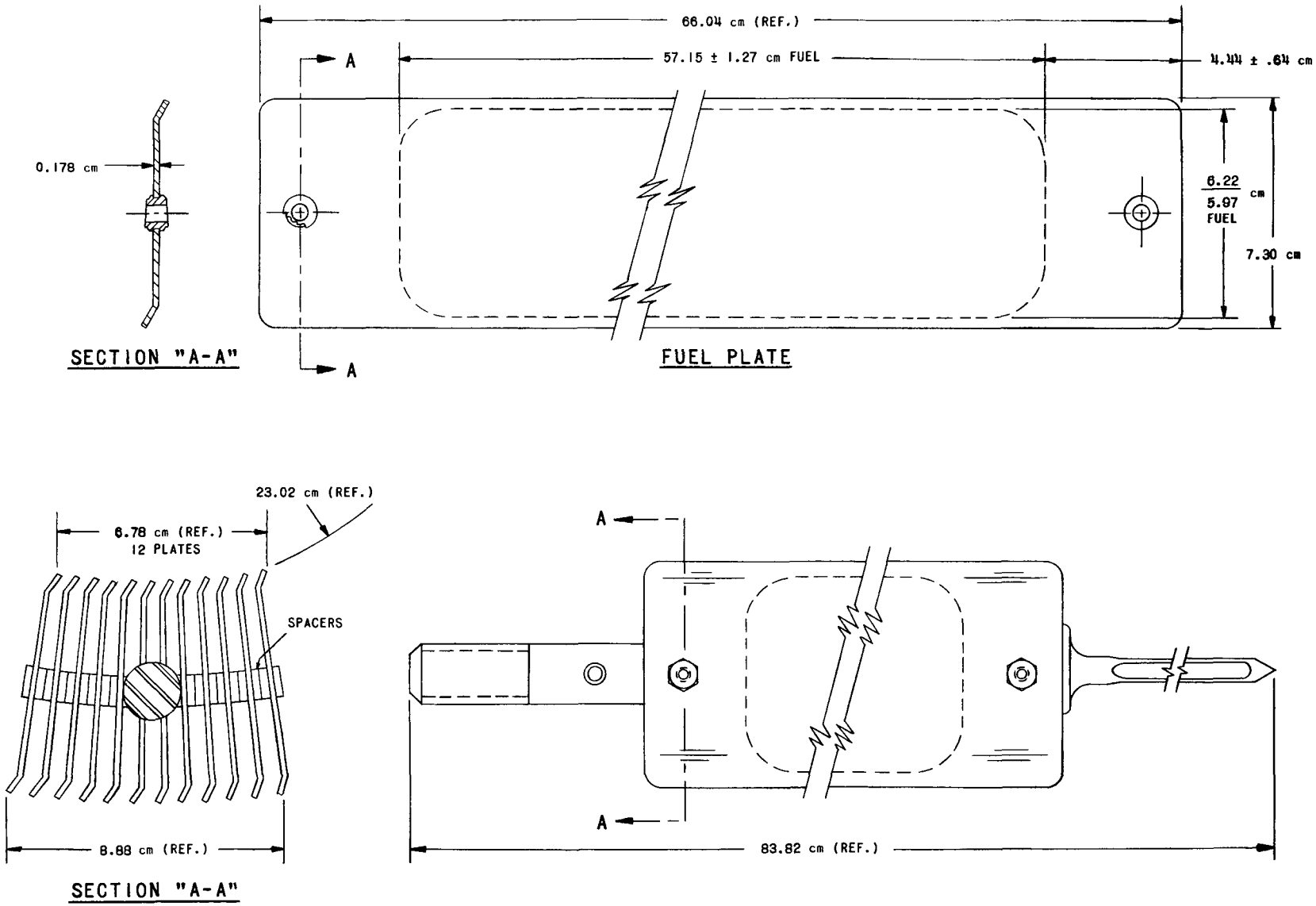

FIG. 9
JUGGERNAUT FUEL ASSEMBLY

3. Reactor Vessel

The reactor vessel (1.96 m high) comprises two welded sections fabricated from 5052-H34 aluminum (0.48 cm thick). The lower section (61 cm ID; 120 cm high) protrudes into the upper section (74.6 cm ID; 76 cm high) to effect a weir and trough arrangement that provides a uniform flow distribution in the core. Closure of the vessel is effected by inserting a concrete rotating shield plug into the upper section.

The penetrations into the vessel include a 15-cm coolant inlet pipe at the bottom, and a 13-cm coolant outlet and two helium lines (5 cm; 1.9 cm) in the upper section. The helium lines service the gas blanket maintained above the water-filled core to retard corrosion of the aluminum vessel and the surrounding graphite reflector. Outleakage of the helium is prevented by a Butyl-N tube* that encircles the inner wall of the upper section of the vessel. The tube is inflated to effect a seal between the vessel wall and the inserted top shield plug. The coolant inlet and outlet line interconnect the vessel with a water storage (dump) tank in the subreactor room.

The flat bottom of the vessel rests on an aluminum plate (1.25 cm thick) which, in turn, rests on the thick concrete floor that also shields the subreactor room.

4. Control Rods

Seven shim-safety rods and one fine control rod provide the movable solid poison control for JUGGERNAUT. The shim-safety rods are plates which move vertically in guide channels between the annular core and the graphite reflector.

The shim-safety rod drives are of the ARGONAUT window-shade type and the fine control rod is actuated by a rack-and-pinion mechanism. Rates of rod withdrawal are limited to speeds which do not compromise reactor safety criteria. For fast shutdown the magnetic clutches release and the rods fall to their full in position in 0.5 sec.

5. Reflector

The active core region of the vessel is surrounded radially by a graphite reflector with an average thickness of 55 cm and a height of 1.2 m. Cutouts are machined in the graphite to accommodate control rod guides, coolant piping, beam hole tubes, and nuclear instrumentation.

---

*Butyl-N has been irradiated equivalent to a 10-year JUGGERNAUT life, with no apparent damage.

6. Thermal Shield

A water-cooled lead thermal shield (5 cm thick) is interposed in the radial graphite reflector to form an enclosure 0.91 m square by 0.91 m high (see Fig. 6). A similar lead thermal shield is installed immediately above the water reflector in the core.

7. External Thermal Columns

The east and the west sides of the graphite reflector are extended to form two thermal columns, 1.22 m x 1.14 m in cross section and 1.83 m deep (see Fig. 7). Both columns terminate at the lead thermal shield. The central nine horizontal stringers can be removed to provide an opening 900 cm^2 in cross section by 1.83 m deep. Both columns are shielded by a vertically operated lead shutter, and heavy concrete blocks.

8. Shielding

Stacked blocks of ordinary and heavy concrete comprise 60% of the radial biological shielding; the remainder is poured high-density concrete (3.20 tonne/m^3). The thickness is sufficient to ensure tolerable radiation levels at the outer surface during reactor operation at 250 kw.

The monolithic concrete shield above the reactor contains several openings for vertical experimental facilities and for fuel exchange operations (see Fig. 8). The largest of these is a removable center shield plug (1.52 m square) that is lowered (by the crane) into position after the reactor vessel and graphite reflector have been installed and aligned.

The center shield plug is pierced with a stepped opening to accommodate a concrete rotating plug (max OD = 0.876 m; 1.60 m long) that effects the reactor vessel closure. The rotating plug contains four auxiliary plugs; three of these plugs seal the experimental access holes leading to the internal thermal column. The fourth plug is indexed by the rotating plug over the desired fuel assembly position during unloading operations.

9. Coolant System

The reactor cooling system is shown schematically in Fig. 10. Light water from the dump-storage tank (1150-liter capacity) is pumped through a shell-and-tube heat exchanger and up into the bottom of the reactor vessel. Secondary cooling water is supplied to the heat exchanger (shell) from a cooling tower. The primary flow continues up through the fuel channels to fill the core annulus. The overflow spills over the weir into the trough and discharges through the outlet nozzle back to the dump tank to complete the cycle.

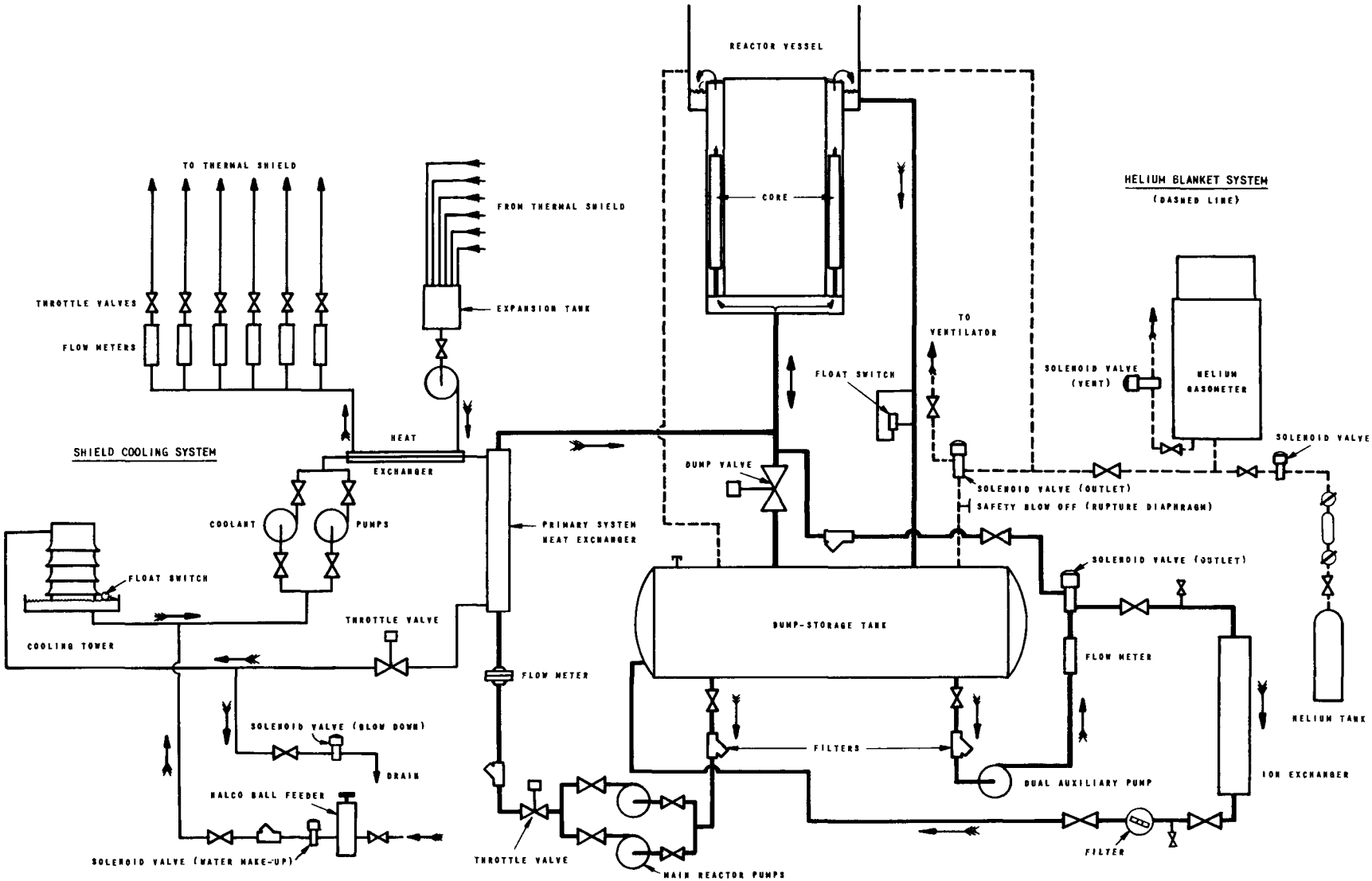

FIG. 10
JUGGERNAUT FLOW DIAGRAM

The core annulus is initially filled with water to the top of the weir at the rate of 0.19 liter/sec by the auxiliary pump. This is done to limit the addition of reactivity to less than 0.025% $(\Delta k/k)$/sec. The main pumps are interlocked with the overflow switch and will not start until the reactor is filled with water. The auxiliary pump will continue to operate until the operator either (1) turns off the pump, or (2) de-energizes the 3-way solenoid valve. The main pumps will not start until the operator actuates a switch on the control console.

Conservative heat transfer calculations based on the heat transfer area of 15.3 m^2 available for total 250-kw heat release, a water flow rate of 3.8 liters/sec, and an inlet water temperature of 32°C, indicate a maximum fuel temperature of 79°C (see Fig. 11). The recommended capacity of the main circulating pump is 7.9 liters/sec with an inlet water temperature of ~32°C at the design power level (250 kw). At these flow conditions the maximum fuel temperature will be about 67°C. The water in the core may be drained to the dump-storage tank in approximately 4 sec through a 20-cm stainless steel Hydromatics Flo-ball valve installed in the inlet piping. The valve is an air-operated, spring-assisted unit that can be opened in 0.2 sec by 6.8 atm of air pressure. The spring alone is capable of opening the valve, but at a slower rate. Air pressure is required to act against the spring to keep the valve closed. This is accomplished by operating a switch (at the control console) to energize a four-way solenoid valve that interconnects the air supply to the dump valve.

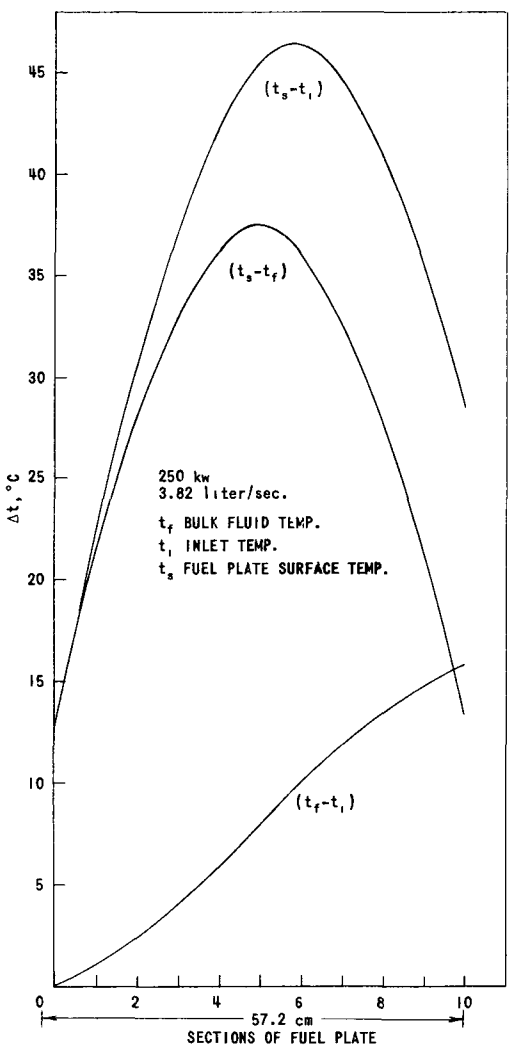

FIG. 11
FUEL PLATE OPERATING TEMPERATURES

Following startup of the main circulating pump, the auxiliary pump is used to supply the water purification system. Water is circulated continuously at 0.3 liter/sec from one end of the dump-storage tank through a mixed bed ion exchanger. The effluent water, of 5-10 megohm resistivity, is then filtered and returned to the opposite end of the storage tank to complete the cycle.

The coolant system contains a helium atmosphere maintained at 1.005 atm by a gasometer. As an added precaution, the storage tank also is equipped with a rupture disk rated at 1.34 atm pressure.

The heat generated in the lead thermal shield is removed by forced circulation of coolant water through aluminum tubes embedded in the shield. As shown in Fig. 10, water is pumped from an expansion tank through a shell-and-tube heat exchanger, and into a manifold. From the manifold, the water is metered (average rate = 5 gpm) through the various coils in the shield which discharge into the expansion tank to complete the cycle. As in the case of the primary coolant heat exchanger, the shell side of the shield coolant system heat exchanger is cooled by water pumped from the cooling tower.

The tower is a metal-enclosed structure (~1.82 m square; 2.34 m high), located approximately 7.5 m southeast of the reactor building. The tower features a probe switch, an immersion heater, and a blower fan. The probe switch is interlocked to energize a solenoid valve that controls the supply of make-up water from the Laboratory. The immersion heater is controlled by a thermostat as a precaution against freezing.

10. Startup Source

An antimony-beryllium source is used to provide neutrons for reactor startup. The source consists of an aluminum-clad, solid cylinder (3.18 cm OD x 4.13 cm long) of irradiated antimony. It is raised from a storage pit beneath the graphite reflector into a beryllium cylinder (8.9 cm OD x 20.3 cm long x 2.5 cm wall) located at the core mid-plane (see Fig. 6). A yield of $\sim 10^8$ n/sec is expected.

The source drive is an electric motor-driven drum and cable that operates through the source loading port shield plug.

11. Fuel Handling

The addition of fresh fuel will not require the use of a coffin. Elements can be loaded directly into the reactor via the fuel-loading port. Loading is normally accomplished with the source in and the water up to provide radiation shielding for personnel. The source is interlocked with the fuel-port plug so that if the source is not up the water will dump. An operator at the console observes the level of multiplied source neutrons at all times during loading operations. One safety rod is kept partially withdrawn to provide capability for emergency shutdown.

The unloading of spent fuel assemblies will be initiated a minimum of one hour after reactor shutdown to afford a sufficient period for decay of fission products. The maximum time lapse will depend upon

the history of reactor operations. The immediate vicinity of the exchange operations will be monitored continuously by radiological physics personnel.

In brief, the prescribed sequence of pre-unloading operations will include: (1) removal of the top decking; (2) shutdown of the helium system; (3) disconnection of system safety interlock circuitry to the central rotating shield plug; (4) deflation of the Butyl-N tube between the interface of the shield plug and reactor vessel wall; and (5) rotation of the shield plug to index the unloading port over the fuel assembly to be unloaded.

The actual unloading will be effected with a manually operated grappling device contained in a lead-shielded coffin transported and positioned over the unloading port by the overhead crane. The grappling device will be lowered to engage and withdraw the fuel assembly into the coffin for transfer to spent fuel storage pit (see Fig. 7). The grappling device will be disconnected from the fuel assembly and replaced by a wire rope before transfer.

The spent fuel storage pit is comprised of a total of 25 stainless steel tubes embedded in earth. The loaded coffin will be positioned over one of the storage tubes, and the fuel assembly lowered.

The top monolithic concrete shield is pierced with four storage holes, each of 15-cm ID. These holes afford temporary storage space for slightly radioactive materials removed from the reactor. Spent fuel will not be stored in these holes.

D. Experimental Facilities

Figure 12 shows the relative position of the vertical and horizontal experimental facilities installed within the reactor and adjacent shielding. Space has been allocated at each facility for the installation of normal and special utilities, piping, and wiring, as may be required.

1. Vertical Facilities

There are 14 vertical facilities for irradiation experiments and isotope production. Access to all vertical holes is from the top of the reactor (see Fig. 8). Each opening is closed with stepped concrete shield plugs for protection against radiation streaming. The plugs are pierced to accommodate instrumentation leads from the installed experiments.

The three thimbles in the internal thermal column have been described earlier.

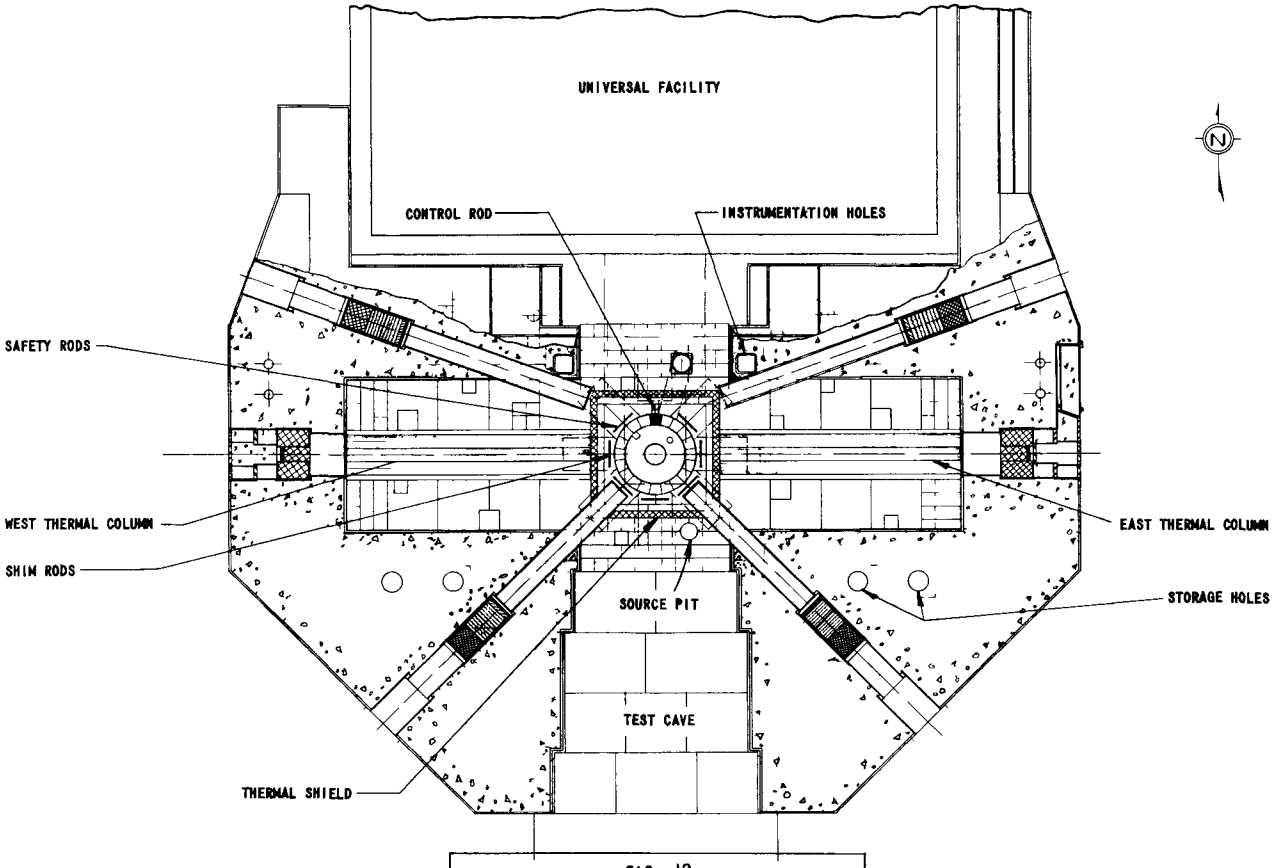

FIG. 12
JUGGERNAUT SECTION AT 63.5 cm ELEVATION

As shown in Fig. 8, there are five 10-cm (V 1-5), four 15-cm (V 7-10) and one 20-cm (V 11) square thimbles that penetrate the biological shield and terminate at the upper face of the east and the west thermal columns. One 10-cm square thimble (V 6) is located above the north graphite reflector. The openings into the thermal columns and reflector are sealed with vertical graphite stringers that are removed through the respective thimbles.

The approximate neutron fluxes (at 250 kw) available in each vertical facility are listed in Table II.

Table II

APPROXIMATE MAXIMUM NEUTRON FLUXES IN VERTICAL FACILITIES

Facility No.	Neutron Flux, n/(cm^2)(sec) Thermal	Fast
V 1	1×10^{10}	5×10^{4}
V 2	1×10^{10}	2×10^{4}
V 3	5×10^{10}	2×10^{6}
V 4	3×10^{11}	5×10^{9}
V 5	1×10^{11}	2×10^{7}
V 6	1×10^{12}	5×10^{11}
V 7	3×10^{10}	2×10^{5}
V 8	3×10^{11}	5×10^{9}
V 9	2×10^{11}	2×10^{8}
V 10	1×10^{10}	5×10^{4}
V 11	3×10^{11}	5×10^{9}

2. Horizontal Facilities

Four 15-cm beam holes are installed on a level corresponding to the core midplane (see Fig. 12). Two of the holes terminate at the corners, and two holes penetrate the corners of the lead thermal shield to within 7 cm of the reactor vessel (for the isotropic neutron fluxes at these positions, see Figs. 14 and 15).

Each beam hole features shroud and liner tubes, expansion joints, vertically operated inner shield gate, and outer stepped shield plugs of ordinary concrete. The inner shield gate consists of alternate layers of boral, steel, and masonite, followed by lead. Each gate is electric motor-driven; operation is controlled from a lock switch located on the face of the reactor. Figure 13 shows a typical beam hole installation.

A universal test facility is located in the north face of the biological shield. The facility is faced with steel plate forms used to pour the monolithic concrete shield, and filled with ordinary and heavy concrete blocks. The blocks can be removed to accommodate irradiations of bulky apparatus adjacent to the graphite reflector (1.22-m square surface area), or approximately 68 cm from the core surface.

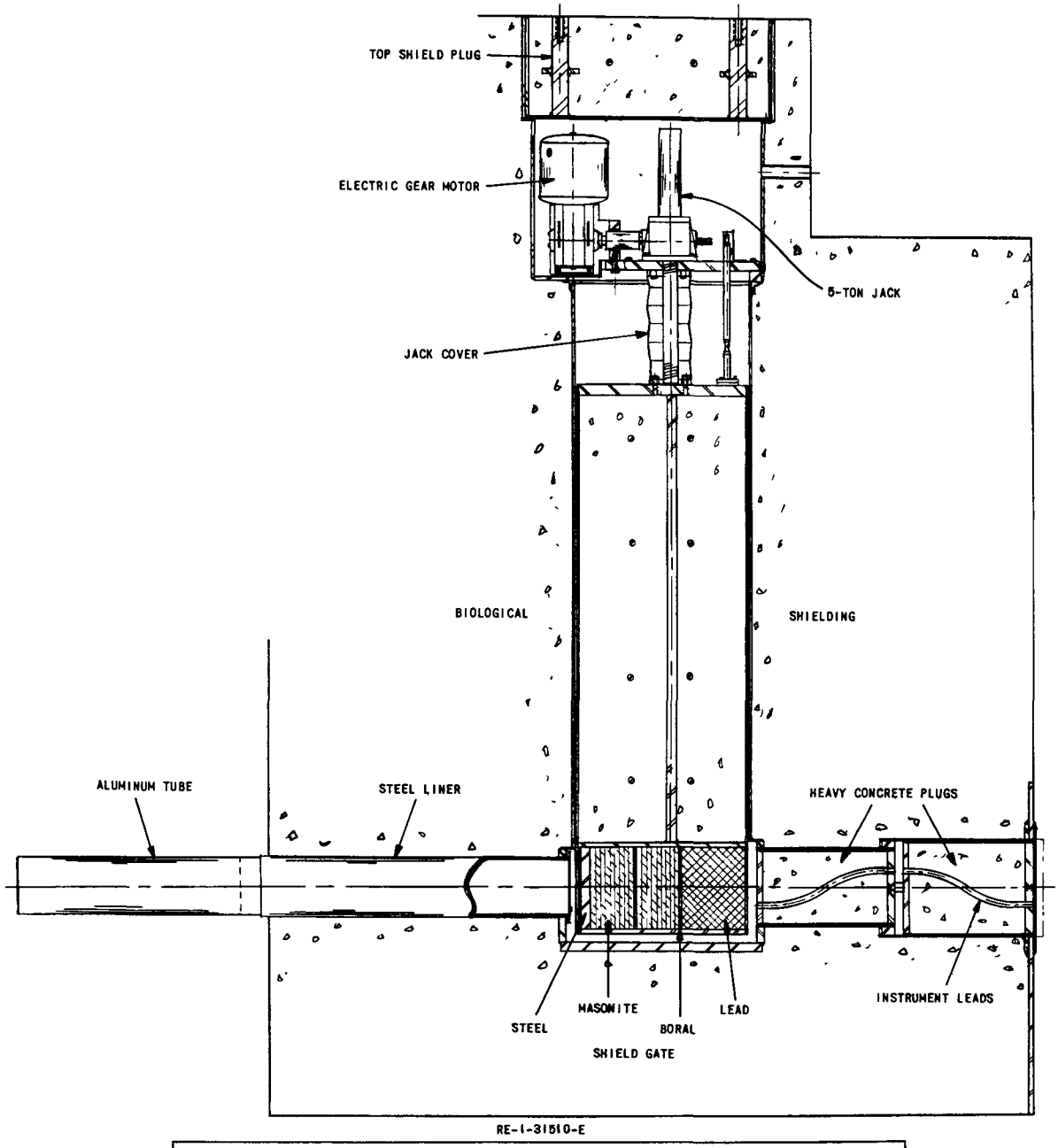

FIG. 13
TYPICAL HORIZONTAL BEAM HOLE AND SHIELD GATE INSTALLATION

Diametrically opposite the universal test facility is a test cave, the inner opening of which also faces the graphite reflector (1.22-cm square surface area), approximately 60 cm from the core surface. The cave is shielded with heavy concrete blocks.

3. Scope of Research Programs

The programmatic studies in the planning stage include spectral measurements using a large converter plate, and measurements of thermal

fission yields and cross sections. The test cave has been reserved for the spectral studies. The west thermal column will be used for the conduct of fission cross section and yield measurements. The primary and auxiliary equipment proposed for these studies is described in Appendix C.

The nature of other research to be performed include neutron diffraction studies, dry shielding experiments, cold neutron technology, and testing of nuclear instrumentation.

E. Supporting Physics Calculations

1. Procedures and Assumptions

Two-group calculations using the PDQ code on the IBM-704 were performed to determine the critical loading and to provide real and adjoint fluxes for use in subsequent perturbation calculations. All important reactivity effects were calculated using two-group perturbation methods. The methods used for evaluation of the two-group constants were checked by using the ARGONAUT as a critical assembly.

a. Reactor Geometry

The diameter of the internal thermal column was chosen to be 46 cm. Assuming a condition of constant power, with a core 60 cm long and 7.6 cm wide, the calculated optimum diameter for a peak thermal neutron flux is 30 cm. For the 46-cm diameter column, the reduction in the thermal flux from its value at the optimum diameter should be less than 9%. The internal thermal column of 46-cm diameter provides a greater amount of experimental space in high-flux regions.

The internal thermal column was assumed to be surrounded by an annular core with an active width and height of 7.302 cm and 57.15 cm, respectively. The non-fuel-containing ends of the aluminum fuel plates were included as a separate reflector region. The thin shell of water and the aluminum containers that surround the core were homogenized and considered a single region.

Plate-type fuel was selected and arranged in a radial pattern within the annulus. The radial arrangement provides an almost uniform fuel density, eliminating the need for graphite fillers as used in the ARGONAUT. Having set the general dimensions, the parameters still to be determined were fuel plate thickness, number of fuel plates, and mass of U^{235}. The values selected for these parameters combine rigidity of structure with a large negative void coefficient and low critical mass.

The external graphite was assumed to have an average thickness of 60 cm, with a lead shell (5 cm thick) interposed 13 cm from the core face. The graphite, in turn, was surrounded by a mixture of concrete and graphite, 67 cm thick.

In the vertical direction, a water reflector was assumed above and below the core proper, and surrounded by an axial extension of the radial components.

The active section of the core was homogenized using disadvantage factors obtained from P_3 approximations. The effect of inhomogeneities attributable to the radial plate arrangement and an active width less than 7.302 cm was calculated later by perturbation methods.

b. Two-group Constants

Fast-group constants for the homogenized core were obtained by reducing Deutsch's 3-group constants.(1) Thermal-group constants for all regions were calculated using the world-consistent set of cross sections.(2) Epithermal effects on the fission and absorption cross sections, although small, were included by means of Wescott's formalism.(3)

Table III lists the two-group constants for a cold, clean core containing 3.0 kg U^{235}.

Table III

TWO-GROUP NUCLEAR CONSTANTS

Core	
Number of fuel plates	240
Fuel loading	3.0 kg U^{235}
Volume fractions	
H_2O	0.74537
U^{235}	0.00229
Al	0.25234
Neutron age (τ)	49.8 cm^2
Diffusion coefficients	
Fast (D_1)	1.269 cm
Thermal (D_2)	0.1863 cm
Thermal absorption cross section ($\bar{\Sigma}_a$)	0.07827 cm^{-1}
Infinite multiplication factor (k_∞)	1.612
Moderator temperature (T_M)	20°C

	τ, cm^2	D_1, cm	D_2, cm	Σ_a, cm^{-1}
Reflector				
H_2O-Al	59.8	1.33	0.231	0.0167
H_2O	31.8	1.20	0.142	0.0195
Graphite	385	1.14	0.916	0.000367
Lead	4,740	1.684	0.918	0.00503
Graphite-concrete	244	1.36	0.765	0.000503
Concrete	205	1.51	0.707	0.00736

c. Reactivity Effects

Two-group first-order perturbation theory was used to calculate the void and temperature coefficients of reactivity, and other reactivity effects. The latter effects included equilibrium xenon poisoning, insertions of poison and fuel within the core or reflector, and the effect of plate spacing on critical mass.

The effect of the beam holes and other large voids were obtained from an empirical relationship involving the adjoint and real fluxes. The results agreed well with experimental data from a variety of reactors.[4]

The change in reactivity ($\Delta\rho$) effected by small perturbations in the nuclear constants over a volume (V) was calculated by means of the following system of equations:

$$\Delta\rho \equiv \frac{\overline{\Delta k}}{k_\infty^* + \overline{\Delta k}} \quad ; \tag{1}$$

$$k_\infty^* = \left(\nu^* \frac{\overline{\Sigma}_f}{\overline{\Sigma}_a} \right)_{core} = \left(\frac{\nu}{\lambda} \frac{\overline{\Sigma}_f}{\overline{\Sigma}_a} \right)_{core} \quad ; \tag{2}$$

$$\begin{aligned} \overline{\Delta k} = \frac{1}{\int_{core} \Sigma_{a2}\, \phi_1^+ \phi_2 \, dV} \Bigg\{ & \int_V \delta(\nu^* \Sigma_f) \phi_2 \phi_1^+ \, dV \\ & - \int_V \delta(\Sigma_a) \phi_2 \phi_2^+ \, dV - \int_V \delta\left(\frac{D_1}{\tau}\right)\left(\phi_1^+ - \phi_2^+\right) \phi_1 \, dV \\ & - \int_V \delta D_1 \left[\frac{\partial \phi^+}{\partial r} \frac{\partial \phi_1}{\partial r} + \frac{\partial \phi_1^+}{\partial z} \frac{\partial \phi_1}{\partial z} \right] dV \\ & - \int_V \delta D_2 \left[\frac{\partial \phi_2^+}{\partial r} \frac{\partial \phi_2}{\partial r} + \frac{\partial \phi_2^+}{\partial z} \frac{\partial \phi_2}{\partial z} \right] dV \Bigg\} \quad , \end{aligned} \tag{3}$$

where

λ = eigenvalue from PDQ Problem $\approx k_{eff}$

ϕ_1 = fast real flux

ϕ_2 = thermal real flux

ϕ_1^+ = fast adjoint flux

ϕ_2^+ = thermal adjoint flux

$\delta(\nu^*\Sigma_f)$ = change in the product: (average number of neutrons released per fission) (fission cross section), for the just critical reactor.

$\delta(\Sigma_a)$ = change in thermal absorption cross section

$\delta(D_1/\tau)$ = change in the fast removal cross section

δD_1 = change in fast diffusion coefficient

δD_2 = change in thermal diffusion coefficient.

In order to evaluate the integrals in Eq. (3), the core was divided into forty regions (five radially and eight vertically). In each region the real and adjoint neutron fluxes were assumed constant and equal to their average values. The average values are part of the output from the PDQ Code. The adjoint fluxes were obtained by switching certain of the input constants.

2. Summary and Analysis of Results

a. Neutron Flux

Figures 14 to 17 show the lines of intersection of surfaces of constant flux with either bottom quadrant of any diametral plane cut vertically through the core. The surfaces of constant flux are symmetrical with respect to the core midplane. The thermal and fast fluxes (Figs. 14 and 15) were obtained using the PDQ Code, assuming that all control rods withdrawn and that the power level was 100 kw.

The values shown for the adjoint fluxes (see Figs. 16 and 17) are such that

$$\int_{core} \Sigma_{a2} \phi_1^+ \phi_2 \, dV = 1.455 \times 10^{17} \quad ,$$

where the values for ϕ_2 are obtained from Fig. 14.

b. Nuclear Characteristics

An arrangement of twelve plates per fuel assembly provides an undermoderated core with negative void and temperature coefficients of reactivity. Figure 18 shows the effect on reactivity of varying the number of plates per fuel assembly while maintaining the fuel loading constant.

All pertinent nuclear characteristics and reactivity effects are listed in Table IV.

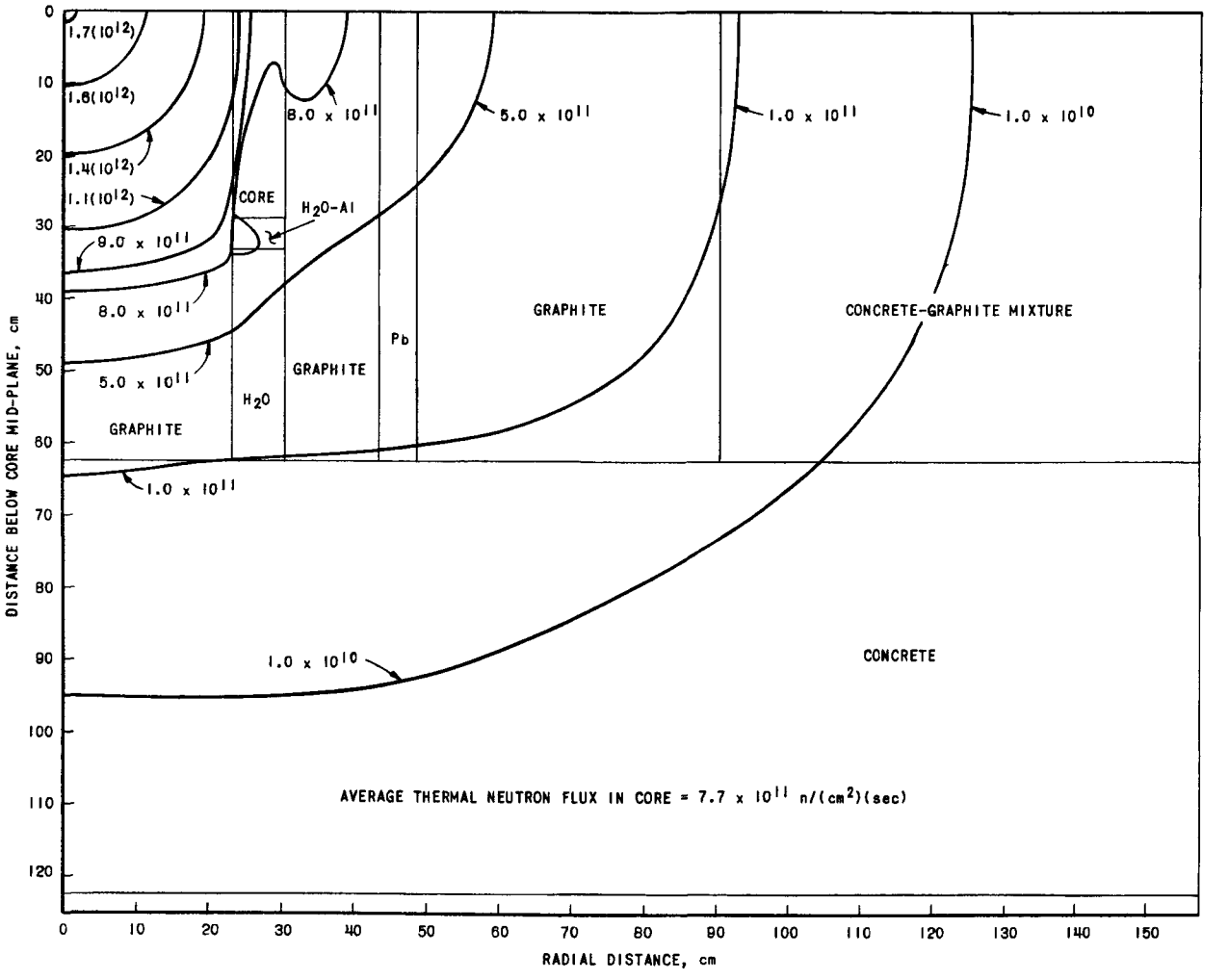

FIG. 14
THERMAL NEUTRON FLUX AT 100 kw WITH ALL CONTROL RODS WITHDRAWN

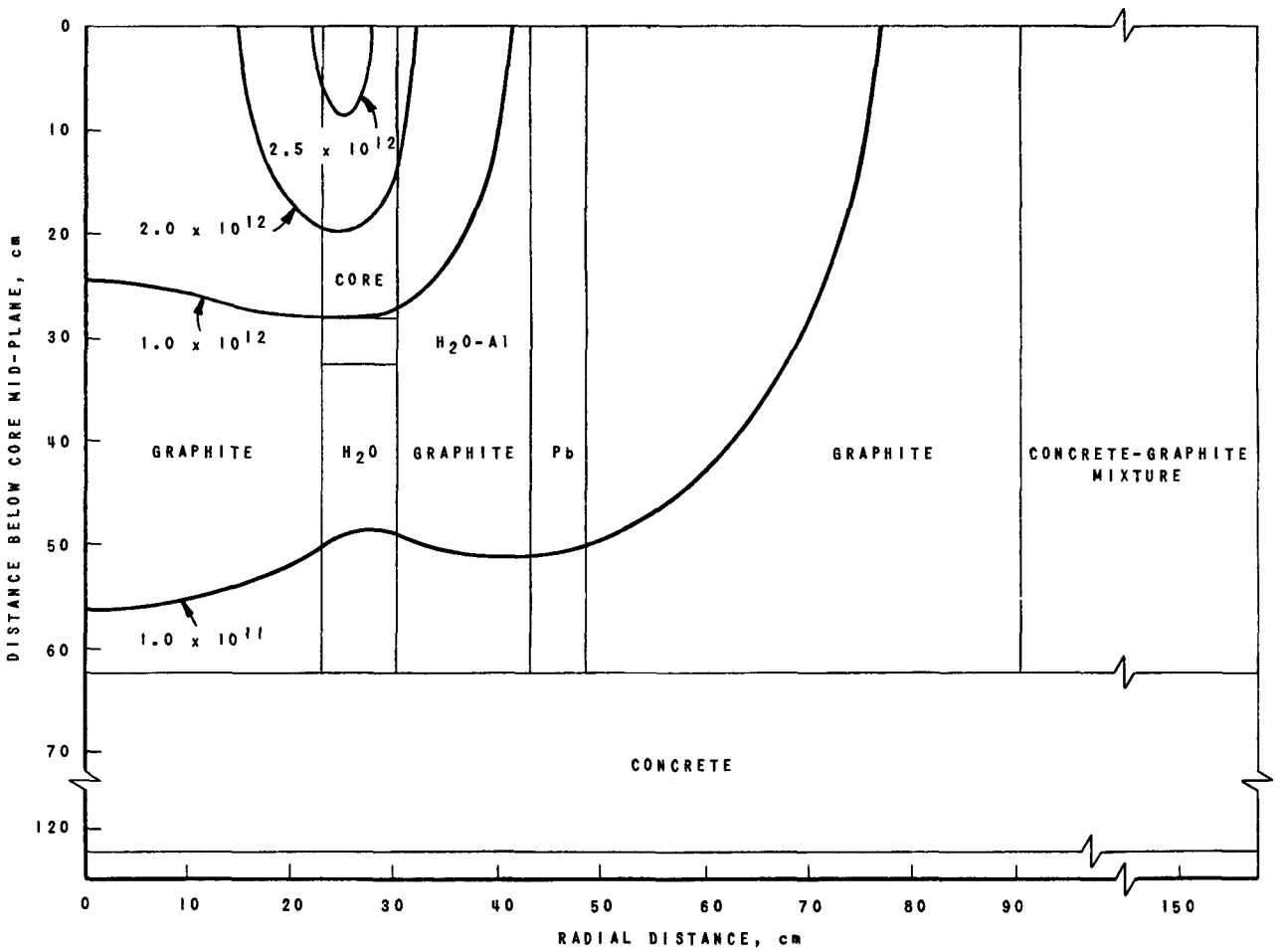

FIG. 15
FAST NEUTRON FLUX AT 100 kw WITH ALL CONTROL RODS WITHDRAWN

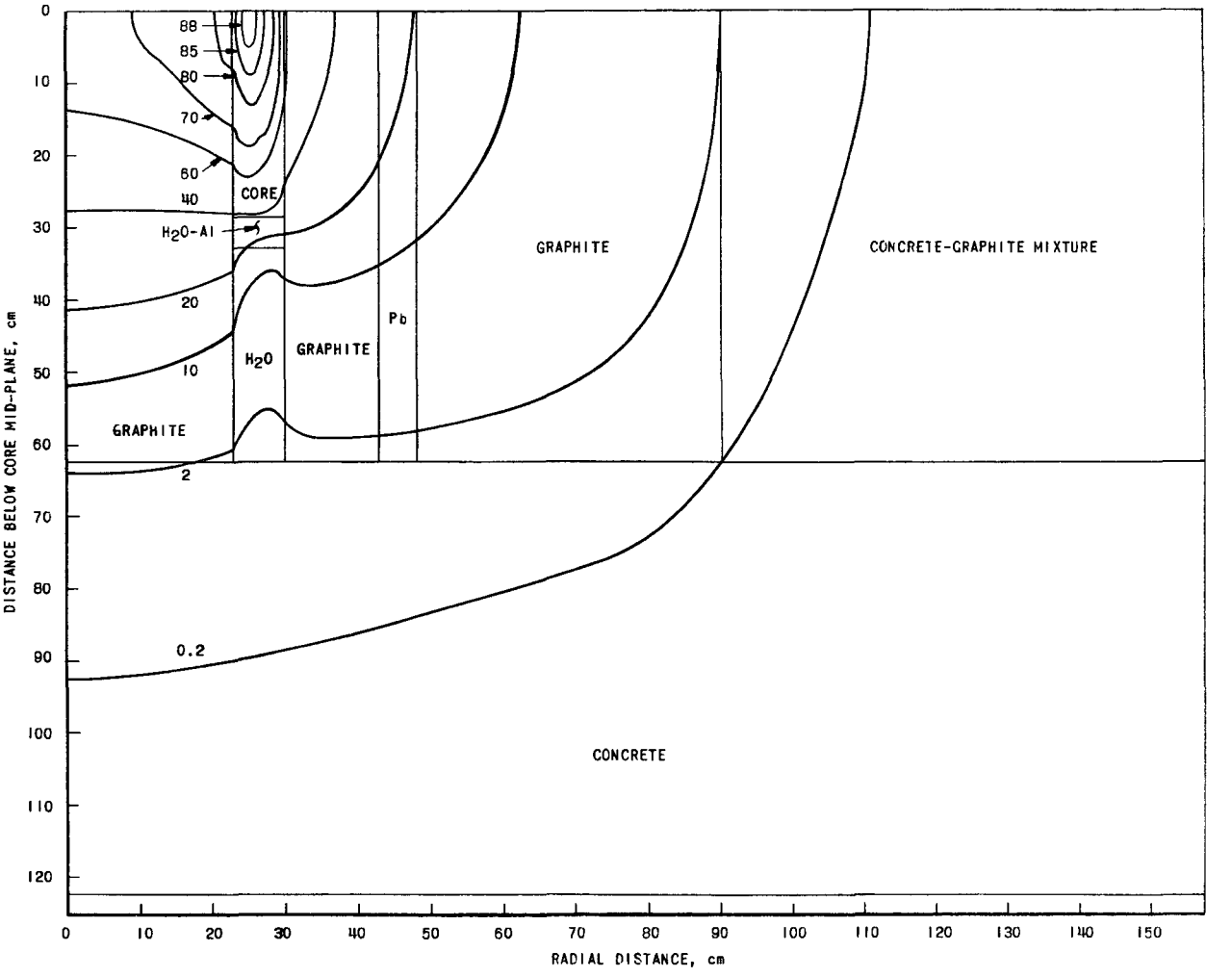

FIG. 16

TWO-GROUP THERMAL ADJOINT FLUX WITH ALL CONTROL RODS WITHDRAWN

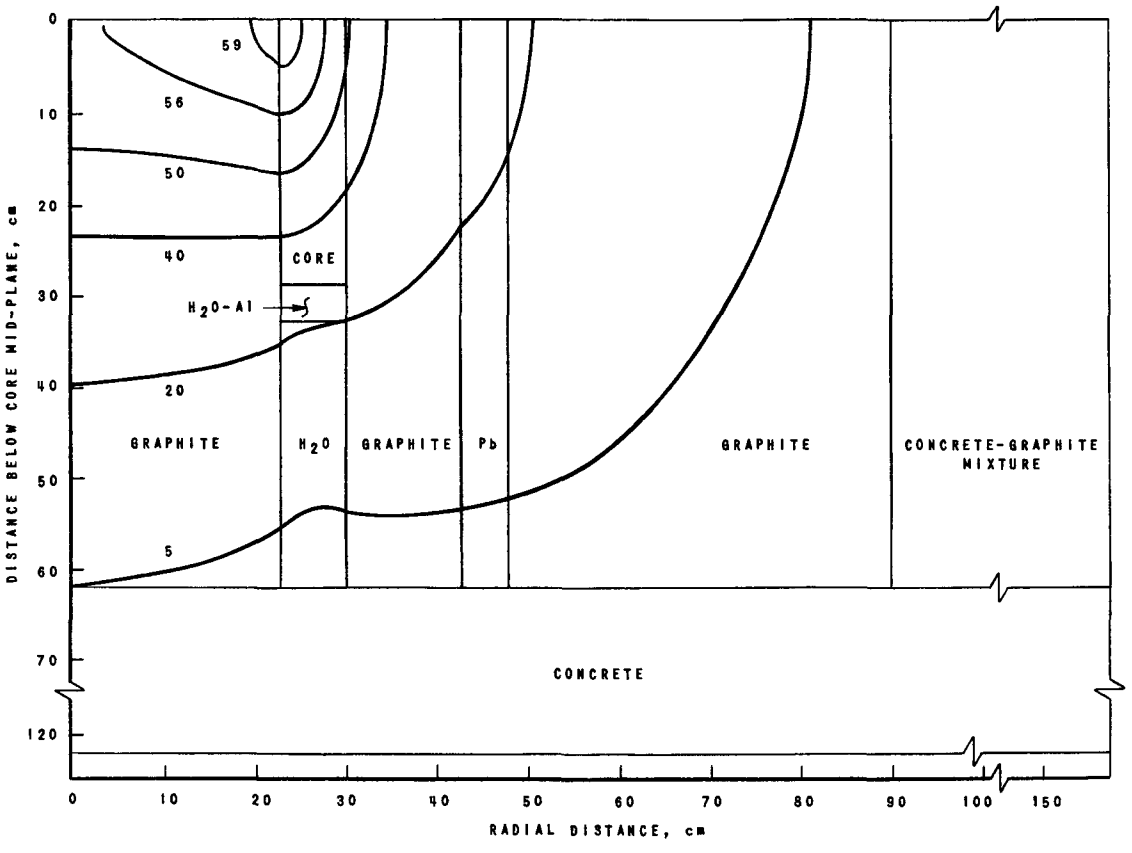

FIG. 17
TWO-GROUP FAST ADJOINT FLUX WITH ALL CONTROL RODS WITHDRAWN

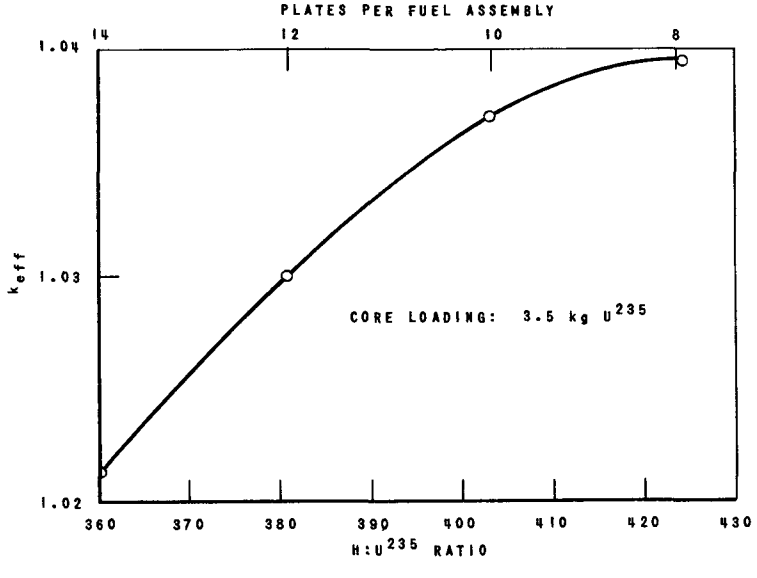

FIG. 18
VARIATION IN k_{eff} WITH $H:U^{235}$ RATIO AS EFFECTED BY NUMBER OF PLATES PER ASSEMBLY.

Table IV

SUMMARY OF NUCLEAR CHARACTERISTICS

Cold clean critical mass	3 1 kg U^{235}
Thermal neutron flux at 250 kw	
Average in core	$1\ 7 \times 10^{12}$ n/(cm^2)(sec)
Maximum in central thermal column	$4\ 0 \times 10^{12}$ n/(cm^2)(sec)
Average prompt neutron lifetime (3 0 kg loading)	$2\ 3 \times 10^{-4}$ sec
Effective delayed neutron fraction	0 0075
Burnup of U^{235}	-0 6 (% $\Delta k/k$)/yr
Average void coefficient of reactivity	-0 15 (% $\Delta k/k$)/1% void
Temperature coefficient of reactivity	
Average (20° to 65°C)	-0 020 (% $\Delta k/k$)/°C
Average prompt (20° to 65°C)	-0 015 (% $\Delta k/k$)/°C
Prompt (65°C)	-0 019 (% $\Delta k/k$)/°C
Effect of equilibrium xenon at 250 kw	-0 80 % $\Delta k/k$
Effect of samarium buildup (after 2 yr)	-1 0 % $\Delta k/k$
Effect of 15-cm beam holes	
Inside lead thermal shield	-0 36 % $\Delta k/k$
Outside lead thermal shield	-0 10 % $\Delta k/k$
Central 15-cm graphite column	
Removal	-2 4% $\Delta k/k$
Replacement with H_2O	-4 4 % $\Delta k/k$
Insertion of fuel in central hole	
One fuel box in air-filled hole	+3 6 % $\Delta k/k$ (max)
One fuel box in H_2O-filled hole	+3 2 % $\Delta k/k$ (max)
Worth at center of internal thermal column	
U^{235}	+0 030 (% $\Delta k/k$)/gm
Cadmium	-0 009 (% $\Delta k/k$)/cm^2
Dilute poison	-0 0363 ($\Sigma_a V$) % $\Delta k/k$
Void	$-0\ 62 \times 10^{-5}$ (% $\Delta k/k$)/cm^3
H_2O	$-0\ 47 \times 10^{-3}$ (% $\Delta k/k$)/cm^3
Flooding control rod guide channels with H_2O	-0 12 (% $\Delta k/k$)/channel
Worth of individual control rod void	-0 036 % $\Delta k/k$
Homogeneous addition of U^{235} to core	+0 0078 (% $\Delta k/k$)/gm
Worth of natural uranium fission plate (30 cm square, 2 5 cm thick) outside reflector	$<$ + 0 15 % $\Delta k/k$

An analysis of the two-group perturbation theory for the MTR has shown it to be accurate within 10% for a uniform change of 15% (or less) in any one constant.(5) The same degree of accuracy should apply to most of the foregoing calculated reactivity effects, in particular, to the plate-spacing effects in Fig. 18, and the void and temperature coefficients listed in Table IV. The large reactivity changes effected by insertion of fuel assemblies in the central thermal column, and other changes of similar magnitude, are less accurately known.

c. Operational Lifetime of Core

Table V lists the negative reactivity effects at full power. The fixed values, which total -5.0% Δk, include an allowance of -2.3% Δk for experimental apparatus and beam holes. Samarium buildup approaches a steady-state value after two years. Burnup of U^{235} causes a maximum reactivity loss of 0.6% Δk per year.

Table V

NEGATIVE REACTIVITY EFFECTS AT FULL POWER

	% Δk
Xenon poisoning	-0.8
Temperature rise (20° to 65°C)	-0.9
Samarium buildup	-1.0
Four beam holes ("open")	-0.9
Allowance for experiments	-1.4
Total	-5.0
Burnup of U^{235} per year	-0.6

The fuel loading will be limited to that which can be kept subcritical by the three shim rods in the clean, cold reactor with the beam holes open except for the prescribed closure shielding. The excess reactivity controlled by the shim rods is approximately 4.7%. The proposed loading will allow full-power operation for a period of one to two years. The lifetime of the core may be extended by the following procedures, either independently or simultaneously:

(1) Replace dummy plates (aluminum or boron-aluminum) with fuel plates;

(2) Reduce reactivity allowance for experiments;

(3) Partially plug up the beam holes.

Future circumstances may necessitate an increase in the fuel loading (>4.0 kg U^{235}) to obtain the excess reactivity required for full-power operation. In this event, the number of plates per assembly could be increased from twelve to fourteen by reducing the thickness of the spacer buttons on the respective plates (see Fig. 9).

The increase in the number of plates per assembly would be reflected by: (1) a total fuel loading of 4.7 kg U^{235}; (2) a maximum gain of 4% in reactivity; (3) slightly stronger negative void and temperature coefficients of reactivity; and (4) a slight increase in the maximum step reactivity input that could be tolerated.

Subject to the constraint that the available excess reactivity does not exceed ~7% Δk, a decrease in the fuel plate spacing would provide greater reactor safety due to the increased magnitude of the negative void and temperature coefficients of reactivity.

F. Controls and Instrumentation

1. Control Rods and Drive Mechanisms

a. Control Rods

The complement of control rods includes seven shim-safety rods, and one fine control rod. The shim-safety rods feature a poison section of 2 w/o natural boron-steel, 48 cm long, 17.8 cm wide, and 0.274 cm thick. The poison section of the fine control rod is fabricated from cadmium and measures 29.2 cm long, 2.54 cm wide, and 0.020 cm thick.

Each rod operates in a guide channel that penetrates the graphite reflector surrounding the lower section of the reactor vessel that contains the core. Owing to the protrusion of the upper section of the vessel, the guide channels are inclined 5 degrees from the vertical in order to place the rods in close proximity to the core (see Fig. 6). The average distance from each rod to the core surface is 4 cm.

Figure 19 shows the orientation and function of the control rods proposed for initial operation of the reactor. Other than the fine control rod, the functions of the rods can be interchanged. However, all control rod schemes will include three shim rods and four safety rods.

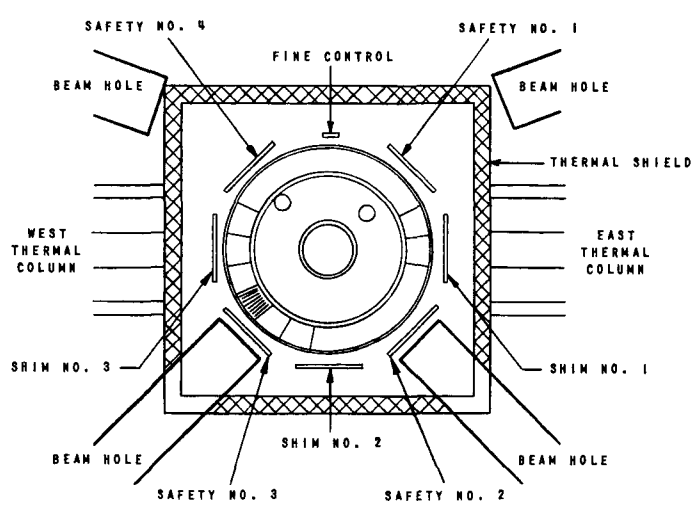

FIG. 19
ORIENTATION OF CONTROL RODS

b. Worth of Control Rods

The worths of the control rods were obtained from a series of two-group PDQ Code problems programmed for IBM-704 computation. In each problem the control element material was assumed to be black to thermal neutrons. The machine outputs were corrected to include reactivity perturbations from the beam tubes, the control rod gap, and the aluminum-water components surrounding the core.

The results are listed in Table VI. The values are supported by extrapolation of rod worth data from the ARGONAUT reactor.

Table VI

CALCULATED WORTHS OF CONTROL RODS WITH BEAM HOLES DEVOID OF EXPERIMENTS

(Note: See Orientation of Control Rods, Fig. 19)

	% Δk
Fine control rod	0.15
Individual worth of Safety Rods No. 1 and No. 4	1.45
Individual worth of Safety Rods No. 2 and No. 3	1.2
Individual worth of Shim Rods No. 1, No. 2, and No. 3	1.56
Combined worth of Shim Rods	4.7
Combined worth of Shim and Safety Rods	7.5

c. Drive Mechanisms

The shim-safety rods are actuated independently by ARGONAUT-type window shade drive mechanisms shown in Fig. 20.

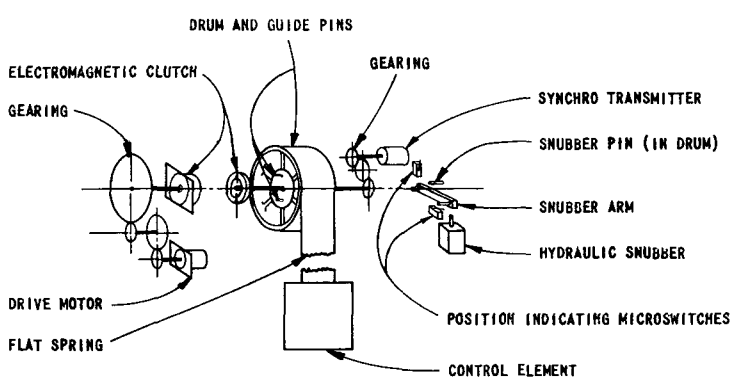

NOTE: SIDE AND TOP SUPPORT PLATES OMITTED FOR CLARITY

FIG. 20
WINDOW-SHADE DRIVE MECHANISM FOR SHIM AND SAFETY CONTROL RODS

The drives are installed in cavities in the top shield and are attached directly to the respective control rod guide channels. Vertical motion is imparted to the rod by an interconnecting stainless steel strip spring that is attached to a rotating drum. The drum is rotated by a dc drive motor through a system of gears and magnetic clutch. The gearing system limits the rate of rod withdrawal to 0.30 cm/sec, corresponding to an average rate of addition of reactivity of 0.01% $(\Delta k/k)$/sec. Fast shutdown (scram) is effected by de-energizing the magnetic clutch. In this event, the rods are spring-assisted and gravity-accelerated to their fully inserted position in 0.5 sec. The total travel of the shim-safety rods is limited to about 50 cm. The dc drive motor and, hence, the motion of the shim-safety rods can be stopped, started, or reversed at any point of rod travel. When fully withdrawn, the bottom of the rod is poised 1 cm above a plane corresponding to the top of the core. When fully inserted, the rods extend to a point 18.4 cm below the core midplane.

As mentioned previously, the functions of the shim-safety rods can be interchanged. More specifically, the three shim rod drives each feature a synchro transmitter that is geared directly to the rotating drum. All drives include a set of cams that operate limit switches for rod travel. The limit switches for each rod illuminate corresponding "full-in" or "full-out" panel lights on the control console. Four synchro receivers are mounted on the console, and interconnected with the transmitters on the drives designated for shim rod operation and for fine control. Should circumstances warrant, a subsequent change in rod designation from shim to safety control can be effected only by transposition of the respective drive mechanisms. Interchange of the drive mechanisms will be made with all rods fully inserted in the core, and with the water removed from the core. Interlocks on the shield blocks above the control rod drives will cause the water dump valve to open when the shield blocks are removed.

The fine control rod is actuated by a conventional rack-and-pinion drive mechanism shown in Fig. 21. Vertical motion is imparted to the control rod by a dc gear head motor coupled directly to the pinion gear drive shaft. As in the case of the shim-safety rods, the gearing system limits the rate of rod withdrawal to 0.33 cm/sec, corresponding to an average reactivity rate addition of $<0.003\%$ $(\Delta k/k)$/sec. In the event of a power failure, the rod will remain stationary until power to the drive motor is restored.

The position of the fine control rod over its total travel of 20 cm is indicated by a synchro transmitter geared directly to the rod drive shaft and a set of cams that operate limit switches. The respective signals are transmitted to a corresponding receiver, and "full-in" or "full-out" lights mounted on the control console.

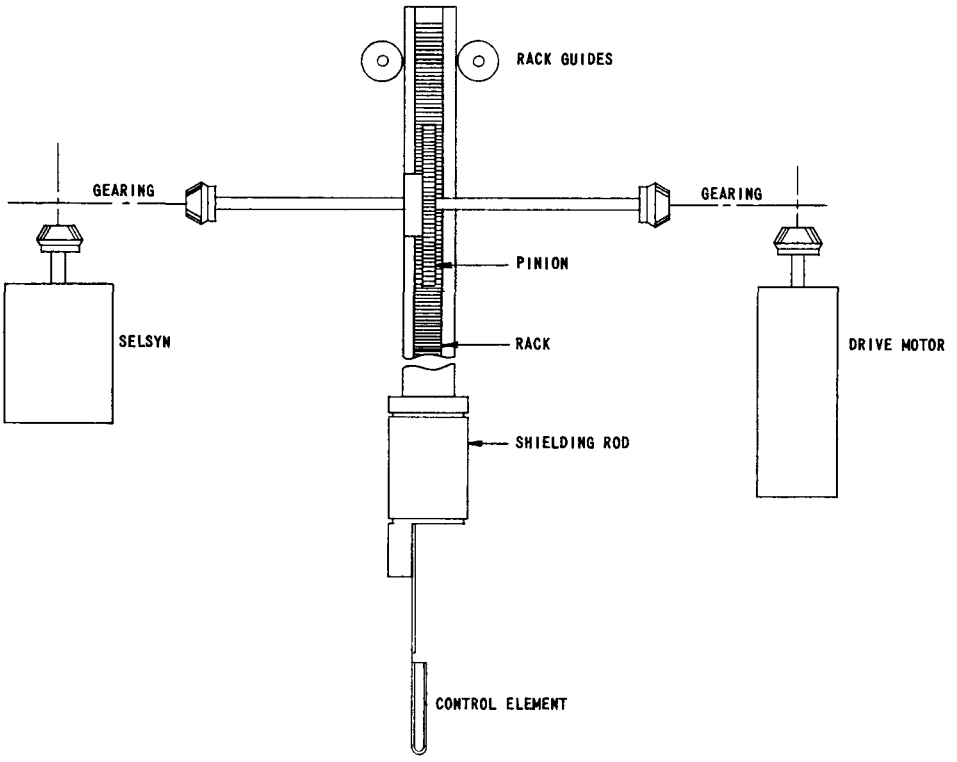

FIG. 21
RACK AND PINION DRIVE MECHANISM FOR FINE CONTROL ROD

2. Water Moderator-Reflector; Shutdown by Water Dump

During startup operations, the core annulus is filled with water (to the top of the weir) by an auxiliary pump that services the water purification system. The pump-up rate is metered at 0.19 liter/sec to limit the addition of reactivity to less than 0.025% $(\Delta k/k)$/sec. The main circulating pump is interlocked with a weir overflow probe that precludes operation of the main pump until overflow has been effected by the auxiliary pump. At this point, the water thickness above the core measures 45 cm, its worth is 1% $\Delta k/k$, and small changes in water thickness will not affect reactivity.

The top water reflector can be removed in 2 sec, and the entire core annulus drained in an additional 2 sec, by de-energizing the four-way solenoid valve that operates the Hydromatics Flo-ball valve installed in the inlet coolant piping interconnecting the reactor vessel and the dump-storage tank.

Depending on the nature of the emergency, reactor shutdown can be accomplished by manual operation of either the normal shutdown switch (Rod Scram) or the emergency shutdown switch (Total Scram) on the control console. The normal shutdown switch will de-energize the magnetic clutches on the shim-safety rods, thereby releasing the rods to

their fully inserted positions. Operation of the total shutdown switch will de-energize the magnetic clutches, and the four-way solenoid dump valve, thereby effecting shutdown by both absorber addition and moderator-reflector removal.

3. Instrumentation

a. Nuclear

The neutron density of the reactor during startup and full-power operation is measured by eight instrument channels, shown schematically in Fig. 22. The neutron flux ranges covered by the respective channels are shown in Fig. 23. The chamber sensitivity is assumed to be 10^{-14} amp/[n/(cm^2)(sec)]. The maximum chamber current of 5×10^{-5} amp at 250-kw operation has been assumed when the chambers are pulled up to the region of minimum flux in the instrument holes. There is a decrease of one and one-half decades from the maximum to the minimum flux positions.

Channel I is used during core loading and initial reactor startup. Current pulses from the BF_3 proportional counter are converted to voltage pulses, amplified, shaped, and then counted on the dual scaler mounted on the instrument cubicle adjacent to the control console. The pulse amplifier features a discriminator circuit that rejects smaller pulses produced by other radiations.

Channel II differs from Channel I in one respect: a timer is included in the dual scaler circuit.

Channel III is similar to Channels I and II in that the signal-current pulses are amplified and shaped. The amplified pulses are fed to a count-rate meter calibrated for five decades ($1\text{-}10^5$ cps). The average count rate is displayed on the meter at the instrument cubicle. The signal (amplified voltage pulses) is also fed to the audio panel for audible indication of up to 5×10^3 pulses.

Channels IV, V, and VI are used for power level safety during intermediate and full-power operation. The output currents from the gamma-compensated, boron-lined ionization chambers are fed through high-gain, direct-coupled amplifiers to high-flux trip circuits. The trip circuits for Channels IV and V are preset to effect reactor shutdown if the reactor power level exceeds 120% of normal operating power. At intermediate powers, the trip circuit of Channel VI is set to initiate shutdown if the current exceeds 90% of full scale.

Channel VII derives its signal from a gamma-compensated, boron-lined ionization chamber. The chamber current is fed through a high-gain, direct-coupled amplifier to a 0-10-mv strip chart recorder at the instrument cubicle.

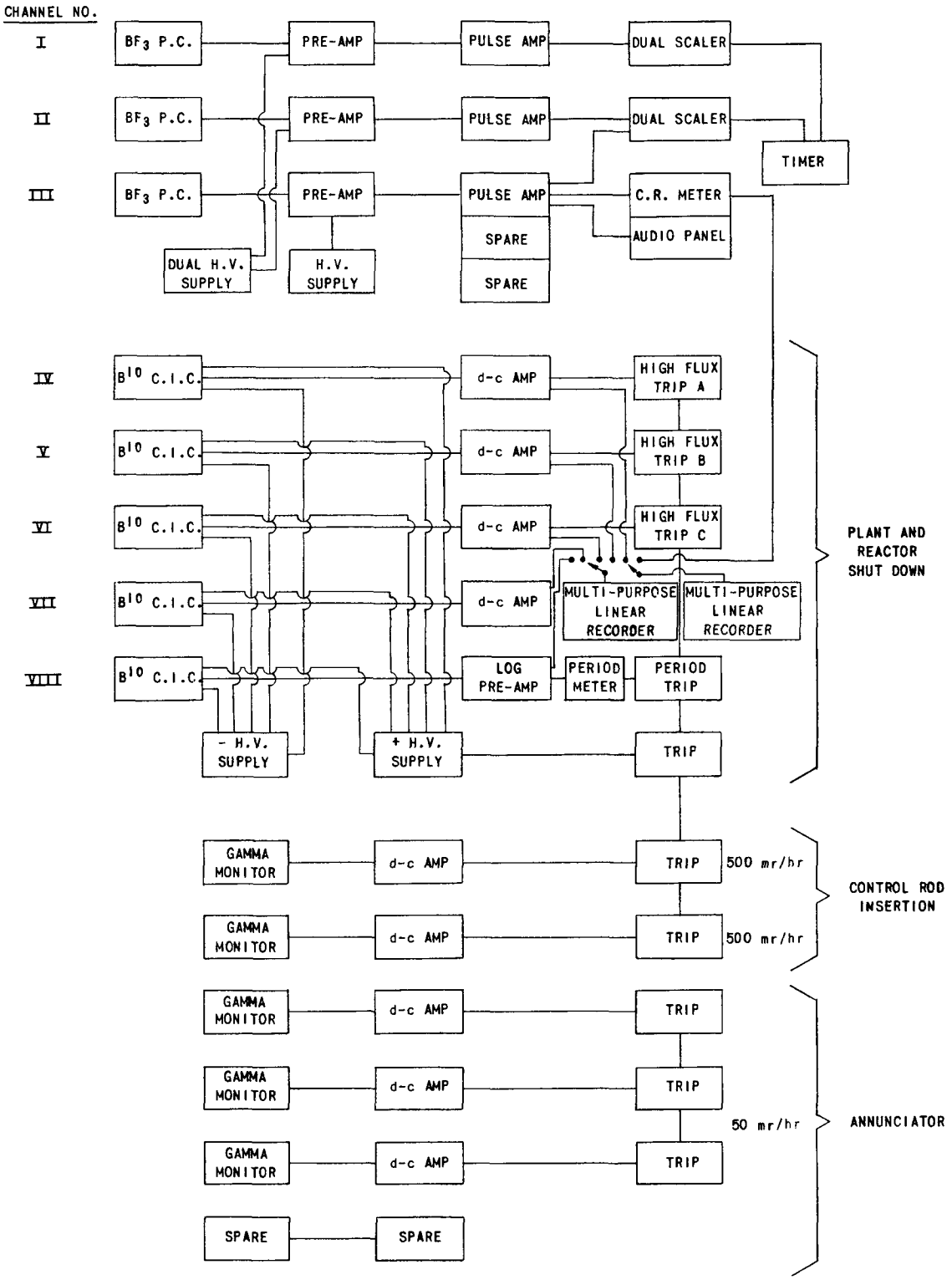

FIG. 22
NUCLEAR INSTRUMENTATION AND RADIATION MONITORING CIRCUITRY.

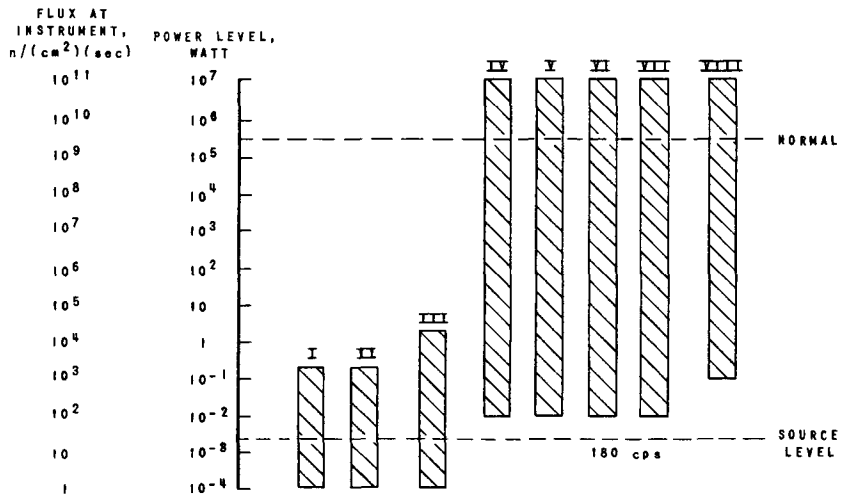

CHANNEL NO.	FUNCTION
I	COUNTER NO. 1 SCALER (12,000 cps)
II	COUNTER NO. 2 SCALER (12,000 cps)
III	COUNT-RATE METER (10^5 cps)
IV	SAFETY TRIP A
V	SAFETY TRIP B
VI	SAFETY TRIP C
VII	LINEAR LEVEL
VIII	LOG PERIOD

FIG. 23
RANGES OF NUCLEAR INSTRUMENTATION

Channel VIII signals are originated by a gamma-compensated ionization chamber and fed to a log pre-amplifier. The logarithmic output is displayed on the log recorder. The derivative of the log N (reciprocal period) is indicated on the period meter at the instrument cubicle. The period circuit is preset to effect shutdown on a period less than 10 sec.

b. Radiation Monitoring System

The radiation monitoring system consists of five gamma monitor channels (see Fig. 23) designed to: (1) register any changes in radiation levels indicative of abnormal plant operating conditions or contamination from fission products, and (2) initiate reactor shutdown and closure of the building air inlet and exhaust systems when radiation levels exceed preset values.

Each channel features a gamma-sensitive ionization chamber and a portable amplifier unit located in the instrument racks next to the control console. The exact location of each monitor will be determined experimentally subsequent to reactor operation.

Two of the channels will be assigned to initiate control rod insertion and closure of the building exhaust systems if the preset value of

500 mr is exceeded. The other three channels will operate annunciator circuits and an audio alarm at the console if radiation levels at their location exceed 50 mr.

The radiation monitoring system is permanently left on.

c. Plant Parameters - Shutdown and Alarm System

The various plant operating parameters and fail-safe interlocks that can cause reactor shutdown and audible and/or visual alarm are summarized in Table VII. In addition, audible alarms and warning lights are actuated inside the reactor building at the onset of and during reactor operation.

Table VII

SUMMARY OF PLANT PARAMETERS - SHUTDOWN AND ALARM SYSTEM

	Automatic Water Dump Shutdown	Reactor Shutdown by Rods	Visual (V) and/or Audible (A) Alarm
Neutron flux high (120% of normal power)			
Channel IV (Safety Trip A)		X	V&A
Channel V (Safety Trip B)		X	V&A
Channel VI (Safety Trip C)		X	V&A
Ion chamber positive high-voltage supply de-energized		X	V&A
Reactor period short (<10 sec)		X	V&A
Gamma monitor indicator high			
>500 mr		X	V&A
>50 mr		-	V&A
Irradiation facility trip	X	X	V&A
Low coolant flow trip (<3 8 liter/sec)		X	V&A
Loss of cooling tower water		-	V
Reactor coolant outlet temperature high (~50°C to 80°C)		X	V&A
Auxiliary relays power failure	X	X	V&A
Instrument rack temperature high (>50°C)		-	V&A
Removal of shield blocks above control rod drives	X	X	V&A

The audible alarm and alarm light system features a common horn, silence button, and reset and lamp test switches. Individual indicator lights are provided for each alarm; therefore silencing an alarm caused by one input does not prevent a subsequent signal from actuating the respective indicator.

(1) Coolant Flow Interlock: Filling of the core with water is accomplished with the purification system pump. The main pumps are interlocked with an overflow switch (see Fig. 10) that can be set to close at a flow rate varying from 0.005 to 0.05 liter/sec. Visual "Flow" and "No-Flow" indicators are mounted on the control console.

(2) Low Coolant Flow Trip: The low-flow sensing element is driven by a flow meter installed in the instrument rack and pneumatically interlocked with the flow meter in the reactor vessel inlet piping (see Fig. 10). The element will effect automatic shutdown of the reactor, and actuate a "Low-Flow" indicator at the control console if the coolant flow rate decreases below 3.8 liter/sec.

(3) Coolant Temperature: Reactor coolant inlet and outlet temperatures and the temperature of the water in the core annulus may be measured by chromel-constantan thermocouples. The output of one of these thermocouples or the differential output of any two thermocouples is plotted on a recorder at the control console.

A high-temperature trip will initiate reactor shutdown if the coolant outlet temperature exceeds a set value 50°C higher than the temperature of the coolant tower water. A visual indicator at the control console will also be actuated.

(4) Loss of Cooling Tower Water: Controls for the cooling tower pump and fan are located in the instrument rack. The instruments at the tower include a probe and a thermostat.

Upon loss of water in the tower, the probe will actuate a signal that will (1) illuminate an indicator light at the console, and (2) energize a solenoid-operated valve that controls the flow of make-up coolant from the Laboratory water system (see Fig. 10).

The thermostat is a precaution against water freeze-up. It will be preset to energize a 12-kw immersion heater and, accordingly, to illuminate a panel light at the console.

(5) Pressure: The helium gasometer pressure (2 in. H_2O) and the rotating plug seal pressure ($4\frac{1}{2}$psi) are displayed on respective gauges mounted on the control panel in the instrument rack. System pressures that require occasional checks are indicated locally in the subreactor room.

(6) Instrument Rack Temperature: Since transistors tend to be very sensitive to temperature changes, the electronic instrument racks are cooled by a blower fan, and the temperature is monitored by temperature switches installed in the exit ducts. The switches are preset to energize visual and audible alarms if the rack temperature exceeds 50°C.

(7) Irradiation Test Facility: The central 15-cm plug in the internal thermal column is interlocked by a limit switch to prevent reactor startup (if removed or improperly positioned) and to initiate reactor shutdown upon movement during the course of subsequent reactor operation. A visual alarm is displayed at the control console.

(8) Control Rod Drive Mechanisms: The shield blocks above the control rod drives are interlocked by limit switches to ensure that the dump valve is open and the core is drained before removal or interchange of the drive mechanisms can proceed. These same switches prevent removal of the center shield plug (1.52 m square) unless the dump valve is open, since the eyebolts used to hoist the center shield plug are located beneath the shielding blocks.

III. OPERATIONAL PROCEDURES

A. Supervision

All reactor operations and experiments will be supervised by a staff person who, by virtue of his training and experience, has qualified for appointment as Reactor Supervisor by the Division Director. The specific responsibilities of the Reactor Supervisor include:

(1) control of fissionable material;

(2) control of keys essential to reactor startup, i.e., for main power switch and control console;

(3) scheduled checks of reactor safety circuits and control equipment;

(4) documentation of operational history of the reactor;

(5) review and approval of proposed experiments;

(6) specific instructions to each qualified Reactor Operator with respect to operational procedures and limitations dictated by each experiment; and

(7) suspension or termination of reactor operation in the event of system malfunction or component failure.

B. Initial Fuel Loading

The initial fuel loading will be prefaced by a rigorous performance test of all system components, instrumentation, safety interlocks, and alarms. The shim-safety rods and drive mechanisms will be operated independently and as a bank (rod movement accomplished in small increments) to ensure smooth performance and rapid insertion in the prescribed 0.5 sec. The dump valve will be tested repeatedly, with and without water in the core annulus, to ensure valve performance consistent with the specified complete drainage of the core in 4 sec.

The nuclear instrumentation will be tested with the aid of a strong antimony-beryllium source positioned in the core region, and by electronic simulation of ionization chamber currents at the control console.

The foregoing tests will be performed and evaluated by staff personnel thoroughly familiar with the design and specified performance characteristics of each component or system. Upon satisfactory completion of the test program, the same personnel along with the Chief Physicist will proceed with the loading of fuel to achieve initial criticality.

The sequence of operations preliminary to fuel loading will be as follows:

(1) Lower source into storage pit in graphite reflector.

(2) Energize control console main power.

(3) Check that all shim-safety rods and fine control rod are fully inserted.

(4) Check that high-flux trip settings are at 90% of full scale on Channel IV Safety Trip A, Channel V Safety Trip B, and Channel VI Safety Trip C.

(5) Check that period trip is at 10 sec.

(6) Check that positive and negative ionization chamber voltages are normal.

(7) Check that central shield plug is in position over the internal column.

(8) Turn on control power at console.

(9) Observe count-rate meters and audible counters.

(10) Raise source into reactor

(11) Observe count-rate meters and audible counters with source fully inserted.

(12) Set range selector to lowest current setting on Channel IV high-flux trip A, Channel V high-flux trip B, Channel VI high-flux trip C, and Channel VII linear level.

(13) Withdraw safety rods No. 1 and No. 3 to the "Full Out" position.

(14) Load eight (or less) fuel assemblies (total of 60 fuel plates) containing approximately 1000 gm U^{235}.

(15) Close dump valve.

(16) Energize auxiliary pump to fill reactor vessel with water.

(17) Determine multiplication with vessel filled.

(18) Withdraw safety rod No. 2 to "Full Out" position.

(19) Withdraw safety rod No. 4 to "Full Out" position.

(20) Determine multiplication.

(21) Raise shim rods at intervals specified by the Chief Physicist, and determine multiplication for each interval.

(22) Open dump valve to drain core, and insert rods.

(23) Calculate next fuel addition.

(24) Withdraw safety rods No. 1 and No. 3 to "Full Out" position.

(25) Add fuel.

(26) Repeat steps (15) through (25) until criticality is approached.

(27) With the reactor near critical, withdraw source incremently and maintain the critical condition by adjusting shim rods and fine control rod until source is completely withdrawn.

(28) Proceed with critical experiments.

C. Normal Startup Procedure

The typical sequence of operations for normal startup is as follows:

(1) Check that shield plugs are inserted in all access holes.

(2) Open helium system and purge reactor if reactor has been opened to the atmosphere.

(3) Energize main power to control console.

(4) Observe that shim-safety rods and fine control rod are fully inserted. "Full-in" positions are indicated by limit lights.

(5) Check that the dial settings for the high flux trip levels are correct. These should correspond to 120% of normal operating power on Channel IV Safety Trip A and Channel V Safety Trip B, and 90% of full scale on Channel VI Safety Trip C.

(6) Check that the period trip (10 sec) operates using the period-check switch if shutdown has been for an extended period.

(7) Check that positive and negative high voltages for the ionization chambers are normal.

(8) Turn on control power at console.

(9) Observe counting rates and audible count.

The remaining operations are effected through a set of interlocked switches. If, at any step, an interlock condition is not satisfied, startup cannot continue.

(10) Raise source into reactor.

(11) Observe counting rates and audible count with source fully inserted.

(12) Set range selector to 10^{-5} amp on Channel IV high-flux Trip A and Channel V high-flux Trip B.

(13) Set range selector to 10^{-11} amp on Channel VI high-flux Trip C and Channel VII linear level amplifier.

(14) Position fine control rod at 10 cm.

(15) Withdraw safety rods No. 1 and No. 3 to "Full Out" position.

(16) Close dump valve.

(17) Start auxiliary pump and energize 3-way solenoid valve to by-pass water flow from purification system to reactor vessel.

(18) Observe counting rates.

(19) When overflow has been established, start the primary coolant pump. De-energize 3-way solenoid valve.

(20) Set reactor water throttle valve for desired flow rate.

(21) Start coolant tower pumps. Set throttle valve at low flux.

(22) Start shield coolant pump.

(23) Withdraw safety rod No. 2 to "Full Out" position.

(24) Withdraw safety rod No. 4 to "Full Out" position.

(25) Observe change in counting rate.

(26) Withdraw shim rod No. 1 by 2.5 cm.

(27) Withdraw shim rod No. 2 by 2.5 cm.

(28) Withdraw shim rod No. 3 by 2.5 cm.

(29) Repeat steps (25) through (27) until reactor diverges.

(30) Adjust shim rod position to establish a 30-sec period, and allow reactor power to increase exponentially.

(31) Change range setting on Channel VI high-flux Trip C, and Channel VII linear level amplifier as neutron level increases.

(32) Adjust coolant tower throttle valve, tower fan, and reactor coolant water throttle valve so that reactor outlet temperature is maintained at desired level as power is increased.

(33) Adjust shim rod position for criticality when the desired power level is reached.

(34) Control reactor power at desired level by manually adjusting the position of the fine control rod, or the position of the shim rods as required.

D. Normal Shutdown

(1) Insert shim-safety rods and fine control rod.

(2) Turn off cooling tower pump (when not required for shutdown heat removal).

(3) Turn off reactor coolant pumps (when not required for shutdown heat removal).

(4) If the reactor operator is to leave the control floor, de-energize dump valve to drain core.

(5) Withdraw control key from control console. If the reactor operator is to leave the control floor, withdraw dump valve power and main power keys also.

E. Emergency Shutdown

Emergency shutdown (scram) of the reactor by a power failure, for example, will result in rapid insertion of the shim-safety rods and complete drainage of the core. In the event of a system malfunction, the Reactor Supervisor may initiate partial or complete shutdown, depending on the nature of the emergency. Operation of the partial shutdown switch at the console will scram the shim-safety rods but will not drain the core. Operation of the total shutdown switch at the console will effect rod insertion and drainage of the core.

The consequences of operating conditions and system malfunctions or failures leading to partial or complete shutdown of the reactor are evaluated in the following section.

IV. REACTOR SAFETY EVALUATION

The following inherent and auxiliary features are designed to prevent or reduce hazards arising from the operation of the JUGGERNAUT reactor:

(1) negative void and temperature coefficients of reactivity, and a long prompt neutron lifetime;

(2) reactivity control by solid absorbers (control rods), and full shutdown by rapid removal of the water moderator-reflector (dump valve);

(3) extensive control interlock systems that preclude other than strict adherence to a specific sequence of pre- and post-startup operations; and

(4) supervisory control exercised by personnel well versed in reactor technology and operations.

The following sections describe how these features will operate, either independently or collectively, in the event of certain postulated incidents.

A. Improper Fuel Loading

The amount of fuel to be loaded in the core is limited to a value ($k_{ex} \approx 4.7\%$) that can be held subcritical by the shim rods. However, it is conceivable that an error in bookkeeping could result in a loading of 4.0 kg of fuel, with a consequent excess reactivity of $\sim 7\%$. If this amount of fuel was loaded while no water was in the core, the reactor would subsequently become critical on water height.

The core is filled with water by the auxiliary pump that services the water purification system. A flow meter and flow valve for this pump are located in the subreactor room. The flow rate will be adjusted to a value corresponding to a maximum reactivity addition rate of $0.025\%(\Delta k/k)/\text{sec}$. The flow valve will be locked in position. An overflow switch will prevent startup of the main pumps until the reactor vessel is filled with water. The low pumping rate of the auxiliary pump provides at least 30 sec for the operator to observe that the reactor is divergent and to initiate shutdown before prompt critical is reached.

Assuming that the operator did not initiate shutdown, either one of two independent instrument channels (one linear flux level and one period meter) would effect fast shutdown within 10 to 30 sec after criticality had been attained. The trip level is set at 90% of full-scale on the linear flux

level channel, and at 10 sec on the period meter. At startup, the flux level channels are set on their most sensitive scale. The scale is changed progressively (by the operator) as the power is increased, so that a significant reading is always obtained.

In the unlikely event that both channels are inoperative and the operator is unaware of the condition, the maximum excess reactivity available (with two safety rods withdrawn) would be ~2% $\Delta k/k$. If inserted at a slow rate, this amount of reactivity could be compensated entirely by the negative coefficient of reactivity without the onset of bulk boiling. The results of tests at SPERT with a ramp reactivity insertion rate of 0.025% $\Delta k/k$ lead to a prediction of a maximum reciprocal period of 5 sec^{-1}, if the ramp is started at a very low power level.[6] An excursion with a maximum power level of 10 Mw would ensue. The maximum fuel plate surface temperature would be ~140°C. The total energy release would be 10 Mw-sec. This would result in no reactor damage and negligible increases in radiation dose received by building personnel. The use of the SPERT data leads to a conservative estimate for the maximum reciprocal period and hence for the maximum power level and energy release (for $\alpha > 5$). A conservative estimate for the reciprocal period is obtained because the prompt neutron lifetime in the SPERT core (A-17/28) is less than that of the JUGGERNAUT (see Appendix A).

When changes in fuel loading are to be accomplished with water in the core, procedures specify that: (1) all shim-safety rods be inserted; (2) the source be in the "up" position; and (3) all nuclear instruments be set on the most sensitive scale that will show a reading less than 90% of full scale.

The worst conceivable accident would result from loading a fuel assembly containing 200 gm U^{235} with the reactor slightly subcritical. (If the reactor were only slightly subcritical, the regulation that all shim-safety rods be inserted must have been ignored.) The maximum amount of reactivity inserted in this manner would be 1.5% $\Delta k/k$. This would entail a gross error by the operator, since the initial reactivity would be 3% $\Delta k/k$ greater than that expected during normal fuel loading. An overloading of this magnitude could be detected before criticality by observing the multiplication of the system.

A step reactivity insertion of 1.5% $\Delta k/k$ would give rise to a maximum reciprocal period of 16 sec^{-1}. An excursion would result with a maximum power level of 30 Mw, a maximum energy release of 20 Mw-sec and a maximum fuel plate temperature of 150°C. The consequences would be little or no damage to the reactor and a negligible increase in radiation dose received by personnel in the building.

B. Startup Accident

With two safety rods withdrawn and the water overflow interlock satisfied, criticality is achieved by withdrawing the remaining shim and safety rods. The rods are interlocked to prevent withdrawal of more than one rod at a time. This is accomplished by microswitches that ensure no current is available to other than the rod being operated. Owing to its relatively small worth (0.1% to 0.2% $\Delta k/k$), the fine control rod can be operated independently of the shim-safety rods (each worth between 1.0% and 1.6% $\Delta k/k$).

The worst conceivable situation after the reactor vessel has been filled with water would occur if the operator starts withdrawal of a shim or safety rod when the reactor is just critical and continues to withdraw the rod to its "Full-Out" position. In this event, reactor shutdown would be initiated by either of two independent instrument channels (the period meter and a linear flux level channel).

In the unlikely case of simultaneous inoperability of both instrument channels, one shim rod plus the fine control rod could be withdrawn at a maximum rate of travel corresponding to an average reactivity insertion rate of 0.01% $(\Delta k/k)$/sec for the 3 min required to withdraw the rods. The reactivity insertion rate would reach a maximum of 0.02% $(\Delta k/k)$/sec near the start of the ramp. The total amount of reactivity (1.8% $\Delta k/k$), if inserted slowly, could be compensated entirely by the negative temperature coefficient of reactivity without the onset of bulk boiling.

Data from tests at SPERT indicate a maximum reciprocal period of 2 sec^{-1} for a reactivity insertion rate of 0.01% $(\Delta k/k)$/sec, starting at essentially zero power.(6) The resultant excursion would peak at a power level of 3 Mw, with a total energy release of 10 Mw-sec, and a maximum fuel plate surface temperature of 120°C. For a rate of insertion of reactivity of 0.02% $(\Delta k/k)$/sec, the corresponding values are a reciprocal period of 4 sec^{-1}, a maximum power level of 5 Mw, and a total energy release of 10 Mw-sec. In either case, there would be negligible increases in radiation doses received by personnel in the building.

C. Loss of Cooling Water

Studies have been made of the effectiveness of removal of shutdown decay heat by radiation and natural convection to prevent core meltdown, in the event of accidental or emergency shutdown involving rapid drainage of the moderator-reflector water from the core while operating at 250 kw (see Appendix B).

Assuming that heat is removed by radiation alone, the temperature of the fuel plates will increase to 323°C. If heat removal is limited to natural convection of the helium atmosphere, the maximum fuel plate temperature will be 192°C. In JUGGERNAUT, the decay heat will be removed by both methods; therefore, the maximum fuel plate temperature will be slightly less than 192°C. The melting point of the aluminum cladding employed for JUGGERNAUT fuel plates is 650°C, or twice the plate temperature calculated for the case of heat transfer solely by radiation. Consequently, a core meltdown will not occur under the foregoing conditions.

D. Sudden Introduction of Cold Water into Core

Since the reactor has a negative temperature coefficient of reactivity ($-1.5 \times 10^{-4} \Delta k/k°C$), introduction of cold water into the core could result in an excursion. This could happen, for example, if the cooling tower pumps were not turned on until the reactor had been raised to a high temperature. Another situation of this type could result from a large increase in pumping rate of the main reactor pumps while the reactor is at operating temperature, or above, and the cooling tower pumps are in operation.

The maximum possible change in the average core coolant temperature is limited to 40°C by maintaining a temperature difference not greater than 50°C between the reactor outlet water and the coolant tower water. A greater temperature difference will cause reactor shutdown as a result of a high outlet temperature. Hence the maximum increase in reactivity obtainable by a sudden introduction of cold water is $0.60\% \Delta k/k$. This would give rise to a positive reactor period of 1.5 sec. The amount of reactivity involved ($0.6\% \Delta k/k$) would be compensated entirely by the negative temperature coefficient of reactivity without boiling occurring.

Operating procedures are such that no step increase in reactivity of this magnitude can occur. The coolant pumps in both the primary and secondary systems are started before the reactor outlet temperature becomes high. In addition, the throttle valve in the primary system is preset at a high enough flow rate (4ℓ/sec) that no sudden injection of cold water is possible.

E. Power Failure

A loss of power supply to the building or to the control console will initiate rapid shutdown of the reactor by simultaneous insertion of the shim-safety rods (magnetic clutches de-energized) and rapid drainage of the moderator-reflector water from the core (air solenoid on dump valve de-energized). As mentioned earlier, decay heat released upon shutdown will be removed by radiation and natural convection. No hazards are anticipated in this event.

F. Shim or Safety Rod Failure

Although none of the shim or safety rods had become lodged during performance tests (10,000 cycles at simulated reactor conditions), it is conceivable that a rod could become lodged in the "up" position. This could result from jamming of the rod drum by roller friction against the ribbon, or by means of a drum bearing failure (see Fig. 20).

A lodged rod could promote a hazard in the event a rod scram would be necessary to prevent the reactor from rising on a very short period. However, at least four rods would have to become lodged simultaneously. The probability of this event is extremely small, excluding an external catastrophe (such as an earthquake).

G. Malfunction of Dump Valve

In the event of rod lodgement in the "up" position, the reactor can be shut down by opening the air solenoid-operated dump valve and draining the core annulus. The top reflector will be removed in 2 sec, and the annulus drained in an additional 2 sec.

Should the dump valve fail to open in the normal manner, the air-supply line to the valve can be severed at the compressor in the mechanical equipment room. This action would vent the air in the cylinder of the valve actuator. The loss of air would permit the valve to open by spring action.

H. Misuse or Failure of Experimental Apparatus

A reactor excursion could be promoted by removal of a heavily absorbing experiment while the reactor is critical or near critical, or by insertion of reactive material or graphite during normal reactor operation. Table VIII lists the reactivity increases effected by movement of graphite components and beam hole plugs in the reactor. Flooding of any reflector opening with H_2O reduces the reactivity of the system (see Table IV).

Table VIII

REACTIVITY CHANGES ASSOCIATED WITH MOVEMENT OF GRAPHITE COMPONENTS AND BEAM HOLE PLUGS

	$\%\Delta k/k$
Insertion of central 15-cm-dia graphite plug	+2.4
Insertion of beam hole plug	<+0.36
Insertion of all 9 stringers in thermal column	+0.51
Insertion of either 4.4-cm stringer in internal thermal column	+0.20
Insertion of 10-cm square vertical stringer 35 cm from core face	+0.10
Insertion of 20-cm square vertical stringer 60 cm from core face	+0.02

As is evident from Table VIII, the most serious hazard is posed by movement of the central graphite plug while the reactor is critical or near critical. For this reason, an interlock has been incorporated into the control system to effect rapid insertion of the shim-safety rods and complete drainage of the core upon movement of the central shield plug subsequent to reactor startup.

The insertion and removal of experiments in all other test facilities available in the JUGGERNAUT will be made in accordance with procedures prescribed by a rigorous safety review of each proposed experiment. The normal procedure will be to shut the reactor in advance of any changes in experiments.

All proposed experiments will be subjected to a hazards review. Particular care will be taken to ensure that hot spots sufficient to cause a large-scale Wigner energy release in the graphite are not generated (see Appendix C).

In the event of an experiment failure with consequent release of radioactivity, the area-monitoring system will initiate reactor shutdown and prevent subsequent startup until tolerance levels have been re-established.

I. Excessive Pressure

Excessive pressure, occasioned (for example) by water boiling during a power surge, will be relieved by rupture of an aluminum diaphragm at the dump-storage tank. The diaphragm will rupture at a pressure of 1.34 atm. Discharge is to the pump room.

J. Instrument Failure

Wherever possible, instrumentation has been designed to fail safe. However, it is conceivable that a component in a trip circuit may malfunction in a manner such that a scram signal from a level or period circuit will be ineffective in causing reactor shutdown. The advent of this type of failure has been reduced by duplication of high-flux trip channels.

K. Earthquake

Earthquakes near the reactor site have been infrequent and of low intensity. The most serious consequence of a severe earthquake would be to jam the shim and safety rods. In this event, reactor shutdown could still be achieved by dumping the water.

An earthquake of sufficient intensity to alter the core lattice has never occurred near the site. Moreover, since the internal thermal column is filled with graphite, it is extremely unlikely that a more reactive geometry could be effected by such a catastrophe.

L. Sabotage

There is no conceivable normal operational procedure that would permit a rapid input of reactivity sufficient ($>3.0\% \Delta k/k$) to cause core meltdown and consequent release of fission products. A reactivity input of such magnitude can be accomplished only by simultaneous circumvention of specific, sequenced procedures, safety interlocks, trips, and control rod schemes. Accordingly, such radical digressions, irrespective of intent or ignorance, can be categorized as sabotage.

For example, a reactivity input greater than 3.0% could occur during fuel-loading operations. This would entail the sudden insertion of at least three fuel assemblies (containing 450 gm U^{235}) into their proper positions in the core while the reactor is critical or slightly subcritical. A near-critical condition would be obtained only if the regulation specifying that the shim-safety rods must be inserted during fueling is ignored. The fuel assemblies are to be loaded and unloaded through the unloading port in the top rotating shield plug. The port will accommodate one assembly at a time. Therefore, the sudden addition of three assemblies would require removal

of the top shield plug without interrupting the safety interlock that would normally de-energize the dump valve to drain the core annulus.

Other methods of effecting a step input of reactivity in excess of 3.0%$\Delta k/k$ involve removal and/or insertion of strong absorber or fissile materials in the central thermal column with the reactor critical or near critical. These operations would necessitate movement of the central auxiliary shield plug, and could not be performed without bypassing the plug safety interlock with the control rods and the dump valve.

M. Argon Activity

Assuming that air is free to diffuse out of the reactor structure during full-power operation, pessimistic calculations indicate that the A^{41} activity in the reactor room may exceed the maximum permissible level.

Should the air monitors detect concentrations of A^{41} above tolerance, a blower fan can be used to cycle the air from the reactor room through the reactor structure into the subreactor room. The effluent from the reactor structure will discharge to the atmosphere through duct work interconnecting the subreactor room and an exhaust port installed on the roof of the building.

N. Hazards of Fission Product Release to the Atmosphere

1. Bases of Evaluation

In the event of a nuclear excursion that leads to core meltdown, the fission products released consist of those which have been produced during previous high-power operation and those generated during the excursion. Owing to the relatively low maximum power (250 kw) of the JUGGERNAUT, the external irradiation hazard posed by the release of stored fission products is somewhat less than the hazard arising from the fission products generated during the excursion.

In contrast, the hazards arising from inhalation or ingestion of radioactive material is caused predominately by the longer-lived isotopes produced and stored in the fuel during full-power operation. Assuming operation at 250 kw for 16 hr each day, or continuous operation at 160 kw, the radioactivity stored in the fuel after equilibrium has been established is 1.6×10^6 curies. Three hours after shutdown, the activity will be reduced by a factor of 10.

The postulated maximum accident to the JUGGERNAUT would be occasioned by a rapid reactivity insertion of 6.3% $\Delta k/k$, and consequent complete meltdown of the core. The total fission energy produced in such an excursion is 130 Mw-sec, corresponding to a total of 4.0×10^{18} fissions.(8) Such an accident would be tantamount to sabotage.

It is assumed, pessimistically, that 10% of the fission products escape from the fuel plates, and that 50% of the released products are retained within the reactor system and the building.

In the absence of experimental data, the practice has been to evaluate hazards on the basis of total release of fission products. In the analysis for the JUGGERNAUT, the fraction of fission products released to the atmosphere was based on MTR-type fuel meltdown experiments performed by Creek, Martin, and Parker.(7) In their experiments, specimens of MTR fuel elements were maintained in the molten state for one hour in an air atmosphere at temperatures of 700°C and 800°C, respectively. (The melting point of aluminum is 650°C.) They observe a 0.43% release of the total gamma-emitting fission products and a 0.93% release of iodine at the lower temperature, and increases to 1.81% and 4.79%, respectively, at the higher temperature. A 2-min rapid melt in air at 700°C resulted in a 9.7% release of rare gases.

The tests on MTR fuel specimens were limited to meltdowns in an air atmosphere. However, similar meltdown studies of APPR and STR elements in air and in steam atmospheres gave no evidence of large increase in fission product release attributable to the steam atmosphere. Creek et al., have suggested there may even be a decrease.(7) No significant metal-water reaction was observed during the entire series of meltdown tests.

The extent of the hazards posed to the surrounding environment has been evaluated by means of the calculational procedures developed in ANL-5715(9) and ANL-5744,(10) and the maximum permissible concentrations of radioisotopes published in NBS-59.(11)

Although certain other long-lived isotopes create a hazard, the isotope I^{131} is present in the greatest concentration relative to its maximum permissible concentration. It is thus indicative of the total hazard from inhalation or ingestion.

2. Inhalation Hazards

Assuming that a radioactive cloud is released from the building and travels at a height of 300 m and a velocity of 1 m/sec, an observer 1600 m distant from the reactor could accumulate 1% of the maximum

permissible concentration of I^{131} in the thyroid gland. If a continuous plume is formed and entrained by the wind at 2 m/sec, an observer 1600 m downwind of the reactor building could accumulate as much as four times the maximum permissible concentration of I^{131} (for continuous exposure) in the thyroid. However, this concentration is only one-tenth of the maximum permissible one-shot dose (2.4 μc of I^{131} = 25 rem).

3. Ingestion Hazards

The accumulation of fission products by ingestion is contingent upon: (1) drainage time of radioactive water to the Des Plaines River; (2) dilution of Des Plaines River by the Kankakee River; and (3) amount of radioactive water ingested by an observer.

The concentration of I^{131} in the Des Plaines River could be 50 times the minimum permissible value. Assuming total instantaneous wash-out of airborne fission product activity at 1600 m from the reactor, the ground water could contain 60 times the minimum permissible concentration of I^{131}. The high degree of iodine contamination of river and drinking water would not constitute a serious hazard, since there is ample time to guard against consumption of the water by the neighboring communities.

4. External Radiation Hazards

The external radiation doses are attributed largely to the isotopes generated during the excursion. The doses due to "steady-state" isotopes will be slightly less; a pessimistic estimate has been obtained by doubling the indicated dose for the "excursion" isotopes.

The total external beta radiation dose received by an observer exposed to a radioactive plume would be a maximum of 120 mr at 1600 meters, and 400 mr at 1000 m from the reactor.

The external gamma radiation dose from a radioactive cloud would be maximum for a cloud height of zero and a velocity of 15 m/sec. For this extreme case, the total dose would be 100 mr at 800 m, and 30 mr at 1600 m, from the reactor. In the event of instantaneous washout 1600 m from the reactor, an observer at this point could suffer an exposure of 4.0 rep gamma, and 40 rep beta radiation.

APPENDIX A

EXTRAPOLATION OF SPERT-I DATA PERTINENT TO NUCLEAR EXCURSIONS IN JUGGERNAUT

The JUGGERNAUT is a slightly undermoderated, water-cooled, graphite-reflected reactor and, as such, combines the advantages of being inherently self-limiting to nuclear excursions and having a relatively long prompt neutron lifetime. The maximum safe insertion of reactivity for this reactor is considered to be just below that for which fuel plate melting is initiated at the hottest spot in the core. No direct experimental data on the excursion behavior of such a reactor are available; however, the behavior of the JUGGERNAUT can be predicted by extrapolation using the SPERT-I correlation[6] and making certain assumptions enumerated and discussed below.

1. The SPERT correlation, involving the reciprocal period, the void coefficient, and the neutron lifetime, includes all important core parameters.

Analyses of the SPERT data indicated that the important variables are the reciprocal period, which is a function of neutron lifetime and inserted reactivity, and the ratio of the void coefficient of reactivity to the neutron lifetime. The thickness of the aluminum cladding of the fuel plates in JUGGERNAUT (0.38 mm) is less than in SPERT (0.51 mm). Neglect of this difference results in a conservative extrapolation. Other parameters, such as core size and hydrodynamic effects, are of relatively less importance.[12]

Although the SPERT tests covered a wide range of core parameters, certain JUGGERNAUT parameters, in particular the neutron lifetime, fall outside the range investigated. This gives rise to an uncertainty in the extrapolation. The method of resolving this uncertainty is discussed below under paragraph 3.

2. The average void coefficient determines the shutdown effect due to voids in the same manner for the JUGGERNAUT as for the SPERT cores.

The SPERT tests have indicated that the average void coefficient of reactivity is a valid parameter for use in correlation of reactor excursion behavior even for the core (B-12/64) that has a local positive void coefficient at its center where the power generation and, hence, void formation is largest.[6,13] The JUGGERNAUT, while exhibiting some mismatch between power generation and negative void coefficient, does not have a positive void coefficient at any position in the core. Thus, the excursion behavior of the JUGGERNAUT can be correlated with the behavior of the SPERT cores by means of the average void coefficient of reactivity.

3. The percentage of voids needed to compensate the maximum allowed insertion of reactivity for the JUGGERNAUT (as obtained from the SPERT correlation), can be formed quickly enough to shut the reactor before fuel plate melting is initiated.

The reactivity insertion for large values of α is compensated almost entirely by steam voids, with some help from metal expansion and the temperature coefficient of reactivity.(6)

A relevant question is whether or not the large amount of reactivity insertion, considered safe for the JUGGERNAUT from an extrapolation of SPERT data, can be adequately compensated by void in the same manner (similar time interval) in which the lesser reactivity insertions were compensated in the SPERT tests. Table IX lists the relevant characteristics of the SPERT cores and the JUGGERNAUT.

Table IX

COMPARISON OF SPERT AND JUGGERNAUT PARAMETERS

Parameter	SPERT Core				JUGGERNAUT
	B-24/32	A-17/28	B-16/40	B-12/64	
Plate spacing, cm	0.165	0.297	0.483/0.165	0.483	0.520
Average void coefficient, (% $\Delta k/k$)/1% void	-0.28	-0.24	-0.18	-0.11	-0.15
Prompt neutron lifetime (ℓ), sec	0.49×10^{-4}	0.48×10^{-4}	0.72×10^{-4}	0.75×10^{-4}	2.0×10^{-4}
$(C_V/\ell)^{1/3}$, $[\Delta k/(cm^3)(sec)]^{1/3}$	2.2	1.9	1.4	1.0	1.1
Reciprocal period (α) to initiate core meltdown, sec^{-1}	400	370	300	200	220[a]
Step reactivity insertion to initiate melting, %[b]	2.62	2.45	3.0	2.2	5.1[c]
Voids to compensate maximum safe reactivity input, %	7	7	13	14	28[c]

[a] Calculated using SPERT correlation

[b] Calculated using inhour equation

[c] Conservatively estimated, these values become 3.0% $\Delta k/k$, and 14% voids

It can be seen that the percentage void needed for compensation in the SPERT cores is always below 15% while for JUGGERNAUT approximately 30% is needed. If the plate spacing was very close in both systems, there would be no uncertainty in the extrapolation; however, the plate spacing in the JUGGERNAUT is slightly greater than the largest spacing employed in the SPERT cores. The plate spacing is important, since voids are considered to originate by film boiling for very short periods.(14) For any

particular void fraction, the film thickness will be directly proportional to the plate spacing. The heat transfer coefficient, which is inversely proportional to the film thickness, will decrease as the void fraction increases and, consequently, the shutdown mechanism may be retarded.

A conservative extrapolation of the maximum safe insertion of reactivity for JUGGERNAUT can be made by assuming that the reactor can tolerate only that amount of reactivity above prompt critical which can be compensated by the same void fraction required to compensate the maximum safe insertion of reactivity for SPERT core B-12/64. The validity of the extrapolation is evident provided the void fraction required in JUGGERNAUT does not exceed the void fraction specified for core B-12/64. Table IX shows the minimum safe reactivity insertion for the JUGGERNAUT to be 5.1% $\Delta k/k$, as calculated from the SPERT correlation.* This would require 28% voids for compensation. However, the maximum voids for SPERT core B-12/64 is 14%. Using this criterion, the maximum safe reactivity insertion for JUGGERNAUT is conservatively estimated at 3.0% $\Delta k/k$.

---

* The reciprocal period (α) at which melting is initiated in the SPERT cores varies approximately as $(C_V/\ell)^{1/3}$, where C_V is the average void coefficient of reactivity, and ℓ is the prompt neutron lifetime.

APPENDIX B

REMOVAL OF CORE DECAY HEAT FOLLOWING EMERGENCY SHUTDOWN

In the event of a shim-safety rod failure, emergency shutdown of the JUGGERNAUT can be effected by rapid drainage of the moderator-reflector-coolant water from the core to the dump-storage tank. The following calculations have been made to ascertain the degree of core decay heat generated consequent to a postulated emergency shutdown, and the adequacy of the heat removal media available to ensure against core meltdown.

Heat Generation

The heat generated in the core after shutdown is calculated by the method of Krause et al.[15] and is based on the assumptions that:

(1) The reactor has been operating continuously (16 hr/day) at 250 kw.

(2) A sudden reactivity insertion of 5.1% $\Delta k/k$ results in a total energy release of 60 Mw-sec and a total of 1.8×10^{18} fissions.

(3) The fission product activity results in a release of $1.26\ t^{-1.2}$ Mev of γ radiation/sec/fission, and $1.40\ t^{-1.2}$ Mev of β radiation/sec/fission, where t is the time after fission, in seconds.

(4) All of the β and one-half of the γ energies are absorbed in the aluminum fuel plates.

For assumptions (3) and (4), there would result an energy release in the core of:

$$E_r = \left(\frac{1.26}{2} + 1.40\right) t^{-1.2} \text{ Mev/sec/fission}$$

$$= 2.03\, t^{-1.2} \text{ Mev/sec/fission (t in seconds)}$$

$$= 1.1 \times 10^{-4} t^{-1.2} \text{ Mev/sec/fission (t in hours).}$$

The number of fissions occurring in the reactor in a time $d\tau$ is

$$dF = 1.8 \times 10^{19}\, d\tau \quad (d\tau \text{ in hours}).$$

Combining the above relations, the rate of heat energy release in Mev/sec (at t hours after shutdown, following T hours of operation at 160 kw) due to fissions occurring in the reactor during a time interval $d\tau$ at time τ can be written as

$$dE_s = 2.0 \times 10^{15} [t + (T - \tau)]^{-1.2} d\tau,$$

and so

$$E_s(t,T) = 2.0 \times 10^{15} \int_0^T [t + T - \tau)]^{-1.2} d\tau$$

$$= \frac{2.0 \times 10^{15}}{0.2} [t^{-0.2} - (t + T)^{-0.2}] \quad .$$

Converting to cal/sec, and letting $T \rightarrow \infty$,

$$E_s(t) = 3.8 \times 10^2 t^{-0.2} \text{ cal/sec.}$$

The rate of release of heat energy in Mev/sec at t hours after shutdown due to the burst of fissions occurring at t = 0 can be written as

$$E_B = (1.8 \times 10^{18})(1.1 \times 10^{-4}) t^{-1.2}$$

$$= 2.0 \times 10^{14} t^{-1.2} \quad .$$

Converting to cal/sec,

$$E_B = 7.7 t^{-1.2} \text{ cal/sec} \quad .$$

Hence, the total heat generated t hours after shutdown is

$$H \text{ (cal/sec)} = E_s + E_B = 380 t^{-0.2} + 8 t^{-1.2} \quad .$$

The core contains 5.4×10^4 gm of aluminum with a heat capacity of $\sim$0.24 cal/(gm)(°C). Therefore, the temperature rise, $\Delta\theta$, of the dry, perfectly insulated core for any period of time t in hours after shutdown is

$$\Delta\theta = \frac{3600}{C_v} \int_0^t H \, dt' \quad .$$

Since

$$C_v = (5.4 \times 10^4)(0.24)$$

$$= 1.3 \times 10^4 \text{ cal/°C},$$

it is found that

$$\Delta\theta = 101\int_0^t t'^{-0.2}\,dt' + 2\int_0^t t'^{-1.2}\,dt'$$

$$= \frac{101}{0.8}\,t'^{0.8} - 10t'^{-0.2}\Big|_0^t \quad .$$

The second term cannot be evaluated at $t' = 0$. This is not inconsistent, since the equation for H is not correct for very small values of t. In order to evaluate the second term, it is assumed that 5% of the total energy of the excursion is in the form of delayed β and γ emissions which are absorbed in the core. The total energy in the excursion is 60 Mw-sec; hence the total delayed energy absorbed by the core is 3 Mw-sec, or 0.717×10^6 cal. The total temperature rise due to this energy is

$$\frac{0.717 \times 10^6}{1.3 \times 10^4} = 55°C.$$

Assuming a time dependence of this temperature rise to be

$$\Delta\theta = 45°C \qquad 0 \leq t \leq 1 \text{ hr}$$

$$\Delta\theta = 55°C - 10t^{-0.2} \qquad t \geq 1 \text{ hr},$$

and an initial fuel plate temperature of 100°C,

$$\theta = 145 + 126\,t^{0.8}\ °C \qquad 0 \leq t \leq 1 \text{ hr}$$

$$\theta = 155 + 126\,t^{0.8} - 10t^{-0.2}\ °C. \qquad t \geq 1 \text{ hr}$$

Effectiveness of Heat Removal Media

Two methods of removing shutdown heat are available in the JUGGERNAUT: radiative transfer, and natural convection of the helium atmosphere. It is assumed, pessimistically, that there is no cooling by natural convection.

The cool surfaces in the radiative transfer process are the liners of the internal thermal column and the graphite reflector. Since the graphite has a large total heat capacity, it is assumed that the cool surfaces remain at 100°C throughout the shutdown period.* The hot surface consists of all the fuel plates in the core, each of which "sees" part of the cool surface. The effective radiative area of the core is 0.97 times the sum of the total outside area of the core and the area of the core facing the internal thermal column.

* Even if this assumption is incorrect, due to inadequate contact between the liners and the graphite, the rise in fuel plate temperature will be only 100°C.

The rate of heat transfer from the hot surface (1) to the cool surface (2) is given by [16]

$$q_{1 \rightleftharpoons 2} = A_1 \sigma (T_1^4 - T_2^4) \frac{1}{\frac{1}{\epsilon_1} + \frac{1}{\epsilon_2} - 1} ,$$

where

$A_1 = 2.47 \times 10^4 \text{ cm}^2$

$\sigma = 1.356 \times 10^{-12} \text{ cal}/(\text{cm}^2)(\text{sec})(°\text{K})^4$

$\epsilon_1 = \epsilon_2 = 0.18$ = emissivity for an oxidized aluminum surface

T_1 = temperature of insulated core, °K

$T_2 = 373°\text{K}$

As shown in Fig. 24, the rate of heat emission equals the rate of heat generation at t = 1.5 hr. The temperature of the insulated core at this time is 323°C, which is the maximum temperature that can be attained. Hence, the temperature of the uninsulated JUGGERNAUT fuel plates will remain well below the melting point (650°C) whenever the water is drained from the core.

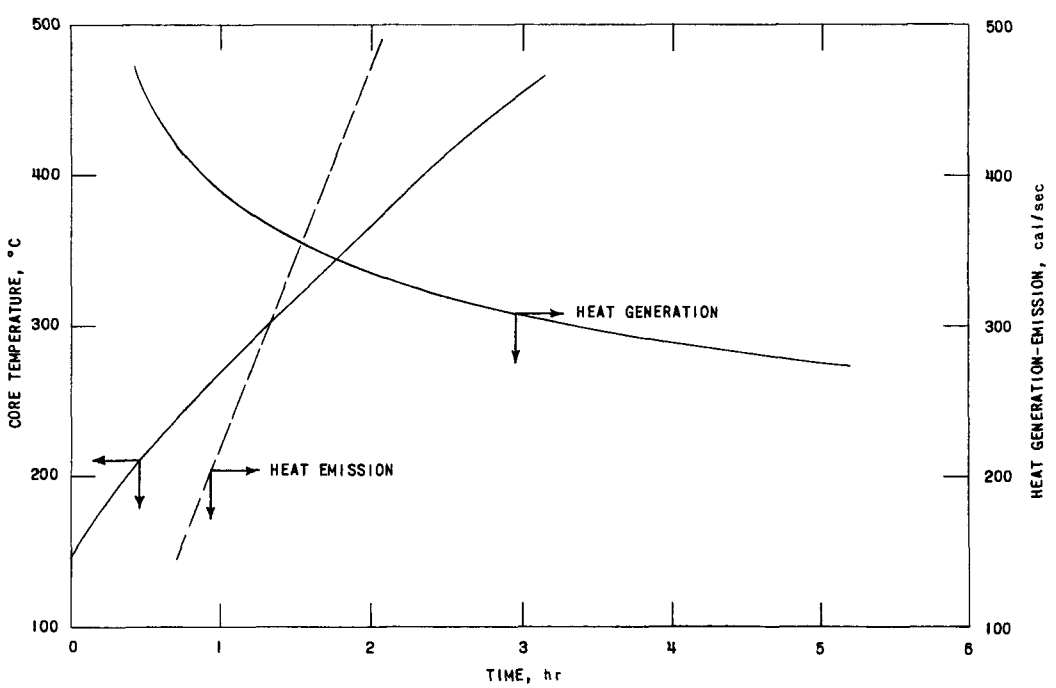

FIG. 24
THERMAL CHARACTERISTICS OF INSULATED CORE UPON LOSS OF COOLANT

APPENDIX C

RADIATION DAMAGE TO GRAPHITE

Environment

The average thermal neutron flux in the central graphite thermal column is $\sim 3 \times 10^{12} n/(cm^2)(sec)$ at an operating power of 250 kw. The fast neutron flux is slightly higher. Assuming reactor operation at 250 kw for 16 hr per day and 300 days per year, the total integrated thermal neutron flux would be 5.2×10^{20} nvt after a period of 10 yr. The average temperature of the central graphite thermal column and the graphite (reflector) immediately surrounding the reactor vessel is ~75°C at full power.

The foregoing environmental conditions have been used in conjunction with a survey paper on graphite irradiations compiled by Woods[17] to ascertain the extent of radiation damage that may be sustained by the graphite components in the JUGGERNAUT reactor after operation for 10 yr.

Summary of Results

Dimensionally, the change in the axial direction (direction of graphite extrusion) will be less than 0.8%, corresponding to an increase of ~5 mm in the height of the internal thermal column. The maximum change in the radial direction would be 0.2%, and most probably would be a shrinkage. After ten years, the rate of damage may increase, but by no more than a factor of 2.

The total amount of stored energy due to neutron irradiation in the central vertical section of the internal thermal column will build up to approximately 150 cal/gm of graphite after a period of ten years. The amount of stored energy will be the same for the innermost portion of the graphite reflector, but lower elsewhere. This energy can be released by annealing the graphite at temperatures above the irradiation temperature of the graphite, although complete release does not occur unless the graphite achieves a very high temperature (>1000°C). However, even making the pessimistic assumption that all the stored energy is released instantaneously at operating temperature, the stored energy available in JUGGERNAUT after 10-yr operation will be insufficient to raise the temperature of any portion of the graphite to within 100°C of the melting point of aluminum (650°C). This is supported by the observation that the integrated heat capacity of graphite from 75°C to 550°C:

$$\int_{75°C}^{550°C} C_p dT \quad ,$$

is equal to 160 cal/gm, while the total stored energy available for release is only 150 cal/gm.

An energy release of this magnitude may occur in the JUGGERNAUT only in the event of an experimental failure that creates an excessive hot spot within the graphite. In order to obtain experimental data on stored energy buildup in the JUGGERNAUT, and to ensure against an uncontrolled energy release, certain precautionary measures will be mandatory. These are:

(1) Graphite temperatures will be determined experimentally for normal full-power operation.

(2) Graphite samples will be inserted near the reactor core for subsequent stored energy analyses.

(3) Safety reviews of all experiments will include the effects of possible hot spots.

APPENDIX D

PROPOSED PROGRAMMATIC STUDIES

Plans for the following research programs have advanced sufficiently to warrant a brief description of the manner in which they are to be performed.

Reactor Spectrum Measurements

The test cave in the south face has been reserved for spectral measurements. The thermal flux available in this facility [$\sim 5 \times 10^{11}$ n/(cm^2)(sec)] should provide adequate counting statistics.

The nature of the studies will involve replacement of the concrete shielding blocks with a stainless steel tank (1.2 m square, 2.4 m deep, 1.9 cm wall thickness) filled with D_2O. A 1.2-m square fission plate containing 19 kg U^{235} will be positioned within the tank. One side of the tank will abut a lead shield (10 cm thick) interposed between the tank and the outer face of the graphite reflector.

The critical mass of the reactor will have to be redetermined with the fission plate in position. In addition, the control rods will be recalibrated. Appropriate shielding will be installed.

Approval of the experiment will be prefaced by a rigorous safety review.

Fission Physics

The Argonne Chemisty Division plans to install a dual fission chamber in the west thermal column for the measurement of thermal fission cross sections and yields.

The fission counter, which consists of two ionization chambers mounted back-to-back, is suspended from a probe capable of reaching the end of the thermal column. The probe is supported and shielded by a "beam catcher" that consists of 10 cm of paraffin and sodium metaborate enclosed within 12.5 cm of lead to reduce background effects. When not in use, the chamber will be withdrawn from the thermal column. The chamber will never contain more than 3 mg of fissionable material.

The face of the thermal column will feature a special door with an installed automatic sample changer. The automatic changer will eliminate the cooling time inccurred during manual exchange of samples.

No hazards are anticipated with the proposed mode of operation. The chambers are filled with a mixture of argon and methane gases (P-10). Continuous flow of this mixture will introduce a small quantity of A^{41} into the reactor; however, the activity will be maintained at less than the tolerance level.

ACKNOWLEDGMENTS

The authors gratefully acknowledge the major contributions by G. Ember and W. L. Kolb to the mechanical design of the reactor, and the shielding analyses and preliminary physics calculations performed by J. F. Fagan.*

REFERENCES

1. D. Moon, Two-dimensional Two-group Calculation of the ARGONAUT One-slab Loading, ANL-6154 (April 1960).
2. D. J. Hughes, New "World-Average" Thermal Cross Sections, Nucleonics, 17, 11 (Nov. 1959).
3. C. H. Westcott, Effective Cross Sections for Well-moderated Thermal Reactor Spectra, CRRP-787 (Aug. 1, 1958).
4. L. E. Link et al., Design of a High-flux Research Reactor: Mighty Mouse. Proceedings of the Second UN International Conference on the Peaceful Uses of Atomic Energy, Geneva (1958), Vol. 10, p. 48.
5. J. W. Webster, An Analysis of the Accuracy of Perturbation Theory, IDO-16173 (June 17, 1954).
6. S. G. Forbes et al., Analysis of Self-shutdown Behavior in SPERT-I Reactor, IDO-16528 (July 23, 1959).
7. G. E. Creek et al., Experiments on the Release of Fission Products from Molten Reactor Fuels, ORNL-2616 (July 22, 1959).
8. J. I. Owens, Metal-water Reactions. II: An Evaluation of Severe Excursions In Light-water Reactors, GEAP-3178 (June 15, 1959).
9. W. C. Redman et al., Hazards Summary Report on the Oxide Critical Experiments, Appendix E; ANL-5715 (April 1957).
10. A. Smaardyk (ed.), Hazards Summary Report on the Argonne Low Power Reactor (ALPR), ANL-5744 (Oct. 1957).
11. Maximum Permissible Amounts of Radioisotopes in the Human Body and Maximum Permissible Concentrations in Air and Water, National Bureau of Standards Handbook 59 (Sept. 24, 1954).
12. L. Gartner and R. Daane, The Self-regulation by Moderator Boiling in Stainless Steel-UO_2-H_2O Reactors, NDA-16 (June 10, 1955).
13. G. O. Bright (ed.), Quarterly Progress Report for October-December, 1957, IDO-16437 (March 1958).

---

*Kansas State University

14. E. Janssen, W. H. Cook, and K. Hikido, Metal-water Reactions. I: A Method for Analyzing a Nuclear Excursion in a Water-cooled and Moderated Reactor, GEAP-3073 (May 1, 1958).

15. E. H. Krause et al., Supplement to Proposal for NRL Research Reactor, NRL-4164 (May 1, 1953).

16. W. H. McAdams, Heat Transmission, 3rd ed.; New York: McGraw-Hill Book Co. Inc. (1954), p. 63.

17. W. K. Woods et al., Irradiation Damage to Artificial Graphite. Proceedings of the First UN International Conference on the Peaceful Uses of Atomic Energy, Geneva (1955), Vol. 7, p. 445.