325
2-6-63

NAA-SR-7288
COPY

STATISTICAL ANALYSIS OF SNAP 10A THERMOELECTRIC CONVERTER ELEMENT PROCESS DEVELOPMENT VARIABLES

AEC Research and Development Report

ATOMICS INTERNATIONAL
A DIVISION OF NORTH AMERICAN AVIATION, INC.

DISCLAIMER

This report was prepared as an account of work sponsored by an agency of the United States Government. Neither the United States Government nor any agency Thereof, nor any of their employees, makes any warranty, express or implied, or assumes any legal liability or responsibility for the accuracy, completeness, or usefulness of any information, apparatus, product, or process disclosed, or represents that its use would not infringe privately owned rights. Reference herein to any specific commercial product, process, or service by trade name, trademark, manufacturer, or otherwise does not necessarily constitute or imply its endorsement, recommendation, or favoring by the United States Government or any agency thereof. The views and opinions of authors expressed herein do not necessarily state or reflect those of the United States Government or any agency thereof.

DISCLAIMER

Portions of this document may be illegible in electronic image products. Images are produced from the best available original document.

LEGAL NOTICE

This report was prepared as an account of Government sponsored work. Neither the *United States, nor the Commission, nor any person acting on behalf of the Commission:*

A. Makes any warranty or representation, express or implied, with respect to the accuracy, completeness, or usefulness of the information contained in this report, or that the use of any information, apparatus, method, or process disclosed in this report may not infringe privately owned rights; or

B. Assumes any liabilities with respect to the use of, or for damages resulting from the use of information, apparatus, method, or process disclosed in this report.

As used in the above, "person acting on behalf of the Commission" includes any employee or contractor of the Commission, or employee of such contractor, to the extent that such employee or contractor of the Commission, or employee of such contractor prepares, disseminates, or provides access to, any information pursuant to his employment or contract with the Commission, or his employment with such contractor.

Price $1.00
Available from the Office of Technical Services
Department of Commerce
Washington 25, D. C.

NAA-SR-7288
ENGINEERING AND EQUIPMENT
TID-4500 (17th Ed.)
SNAP REACTOR, SNAP PROGRAM
M-3679 (26th Ed.)
41 PAGES

STATISTICAL ANALYSIS OF SNAP 10A THERMOELECTRIC CONVERTER ELEMENT PROCESS DEVELOPMENT VARIABLES

By

S. H. FITCH
J. W. MORRIS

ATOMICS INTERNATIONAL

A DIVISION OF NORTH AMERICAN AVIATION, INC.
P.O. BOX 309 CANOGA PARK, CALIFORNIA

CONTRACT: AT(11-1)-GEN-8
ISSUED: DECEMBER 15, 1962

DISTRIBUTION

This report has been distributed according to the categories "Engineering and Equipment" as given in "Standard Distribution Lists for Unclassified Scientific and Technical Reports" TID-4500 (17th Ed.), December 15, 1961 and "SNAP Reactor, SNAP Program" as given in M-3679 (26th Ed.). A total of 592 copies was printed.

CONTENTS

	Page
Abstract	v
I. Introduction	1
A. SNAP 10A	1
B. Thermoelectric Converter Fabrication Development	1
II. Methods of Analysis	5
A. Analysis of Variance	5
B. One-Way Analysis of Variance, Model I	5
C. Multiple Comparisons	9
III. Analysis of Process Variables	12
A. The Effect of Furnace Cooling on the Electrical Resistance of P-Type Elements	12
B. The Effect of Annealing on the Electrical Resistance of P-Type Elements	15
C. The Effect of Machining on Element Dimensions	20
D. The Effect of Machining on Element Resistance	20
E. The Effect of Position in the Hot Press Die on Element Resistance and Dimensions	24
F. The Effect of Contact Vapor Coating on the Electrical Resistance of P-Type Elements	28
IV. Summary and Conclusions	33
References	34

TABLES

		Page
I.	Typical Analysis of Variance Table	9
II.	Comparison of the Effect of Furnace Cooling vs Rack Cooling on the Electrical Resistance of P-Type Elements	13
III.	Evaluation of the Effect of Annealing on the Electrical Resistance of Contacted P-Type Elements	17
IV.	Evaluation of the Effect of Annealing on the Electrical Resistance of Machined P-Type Elements	18
V.	Evaluation of the Need for Measurements of Element Length and Parallelism Before and After Machining	21
VI.	Evaluation of the Effect of Machining on the Electrical Resistance of Thermoelectric Elements	23
VII.	Evaluation of the Effect of Hot Press Die Position on the Electrical Resistance of Thermoelectric Elements	26
VIII.	Evaluation of the Significance of Hot Press Die Position on the Electrical Resistance of Thermoelectric Elements	27
IX.	Evaluation of the Effect of Hot Press Die Position on the Length of Thermoelectric Elements	29
X.	Evaluation of the Effect of Coated Contacts on the Electrical Resistance of P-Type Elements	32

FIGURES

1. Typical Space Vehicle Application of the SNAP 10A 2
2. SNAP 10A Auxiliary Power Unit 3
3. Thermoelectric Converter Module 3
4. Effects of Annealing on Element Resistance 19

ABSTRACT

Statistical analysis, primarily analysis of variance, is applied to evaluate several factors involved in the development of suitable fabrication and processing techniques for the production of lead telluride thermoelectric elements for the SNAP 10A energy conversion system. The analysis methods are described in some detail as to their application for determining the effects of various processing steps, establishing the value of individual operations, and evaluating the significance of test results. The elimination of unnecessary or detrimental processing steps was accomplished and the number of required tests was substantially reduced by application of these statistical methods to the SNAP 10A production development effort.

I. INTRODUCTION

A. SNAP 10A

The successful utilization of space vehicles is dependent on the development of lightweight, long-lived, high-power electrical generating systems. For space missions which exceed several days in length, nuclear systems such as the SNAP 10A are feasible and offer many potential advantages.[1] The goal of the SNAP 10A Program is to develop an auxiliary power unit (APU) which will deliver 500 w at 28 v for one year with a maximum weight limitation of 525 lb.[2] The SNAP 10A system utilizes a compact uranium-zirconium hydride thermal nuclear reactor as a heat source and the direct conversion of nuclear heat into electricity by the thermoelectric effect. A typical application of the SNAP 10A system to a communications satellite is shown in Figure 1. An enlarged view of the SNAP 10A Auxiliary Power Unit is given in Figure 2.

The converter consists basically of many elements of thermoelectric material such as lead telluride. Each element is heated on one side by the heat transfer medium, eutectic sodium potassium (NaK), and cooled on the other side by an individual radiator. The elements are assembled into modules in such a manner that parallel heat flow paths are provided through each element from the NaK tubes to the element radiators. Because of their low-voltage, high-current characteristics the thermoelectric elements on each module are connected in series as shown in Figure 3 in order to obtain sufficient output voltage.

B. THERMOELECTRIC CONVERTER FABRICATION DEVELOPMENT

A program was set up to develop fabrication and assembly techniques for lead telluride elements[3] and modules.[4] Many different techniques were investigated and discarded in the experimental program. The processes selected were those most efficient in producing low resistance elements and modules.

The diffusion of many materials such as copper into lead telluride adversely effects the thermoelectric properties of the material. The hot straps were made of copper in this application. The use of this metal made it necessary to provide a diffusion barrier at the end of each element. Steel diffuses into lead telluride very slowly and, in small amounts, acts as an inert ingredient with no adverse

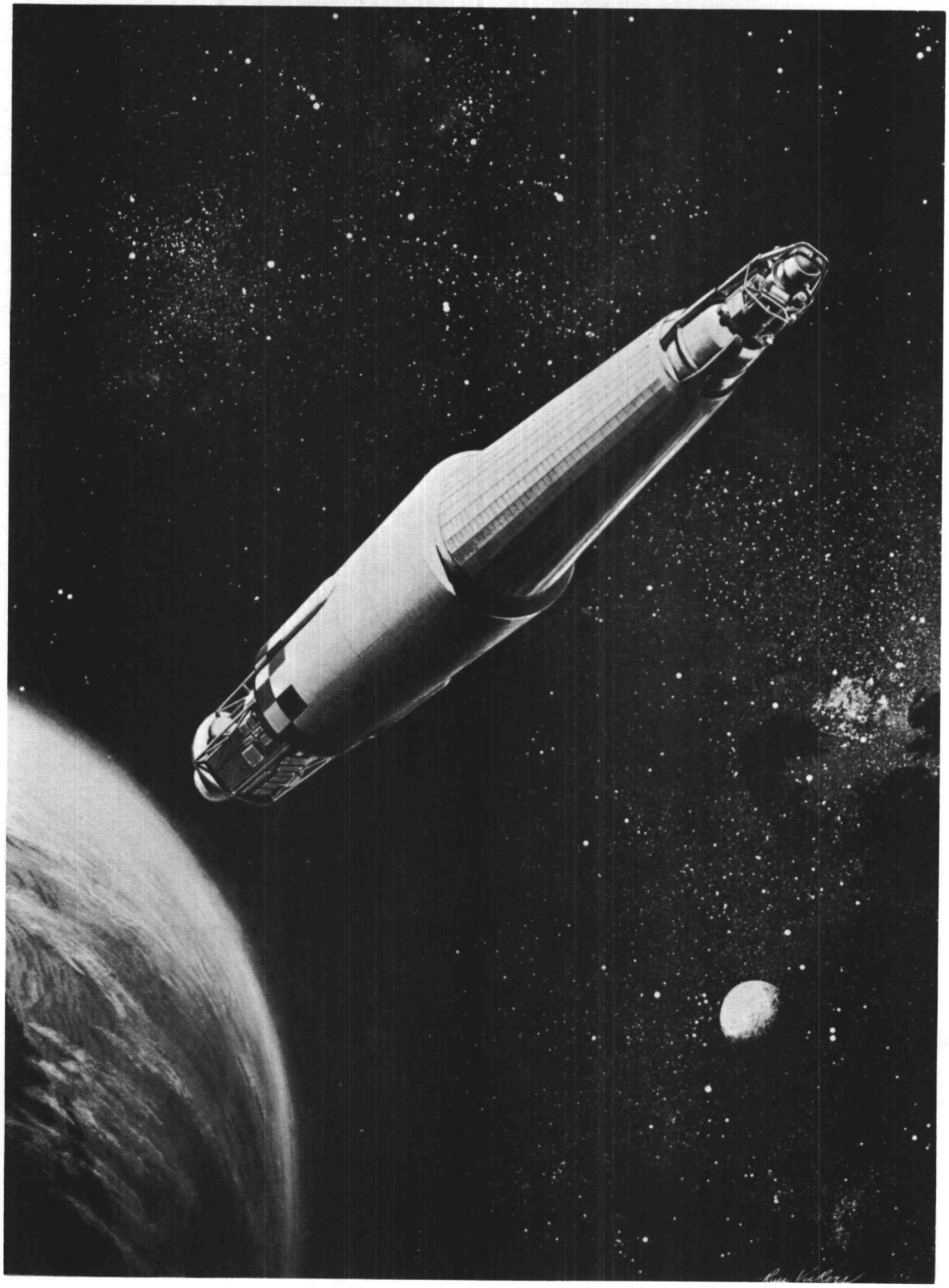

7580-10138

Figure 1. Typical Space Vehicle Application of the SNAP 10A

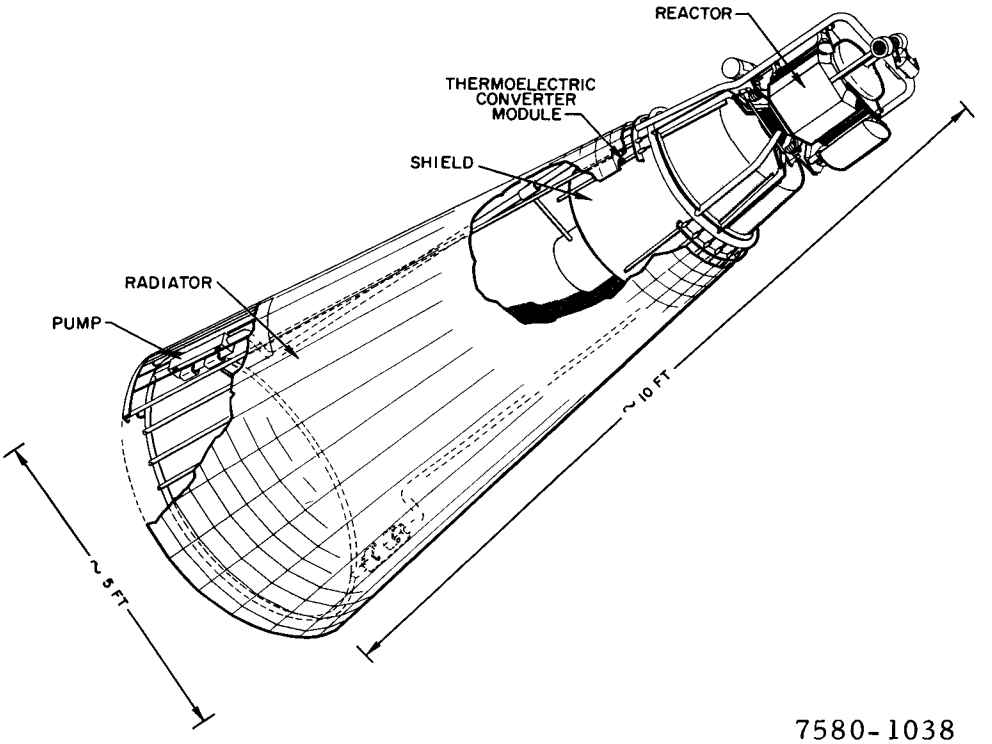

Figure 2. SNAP 10A Auxiliary Power Unit

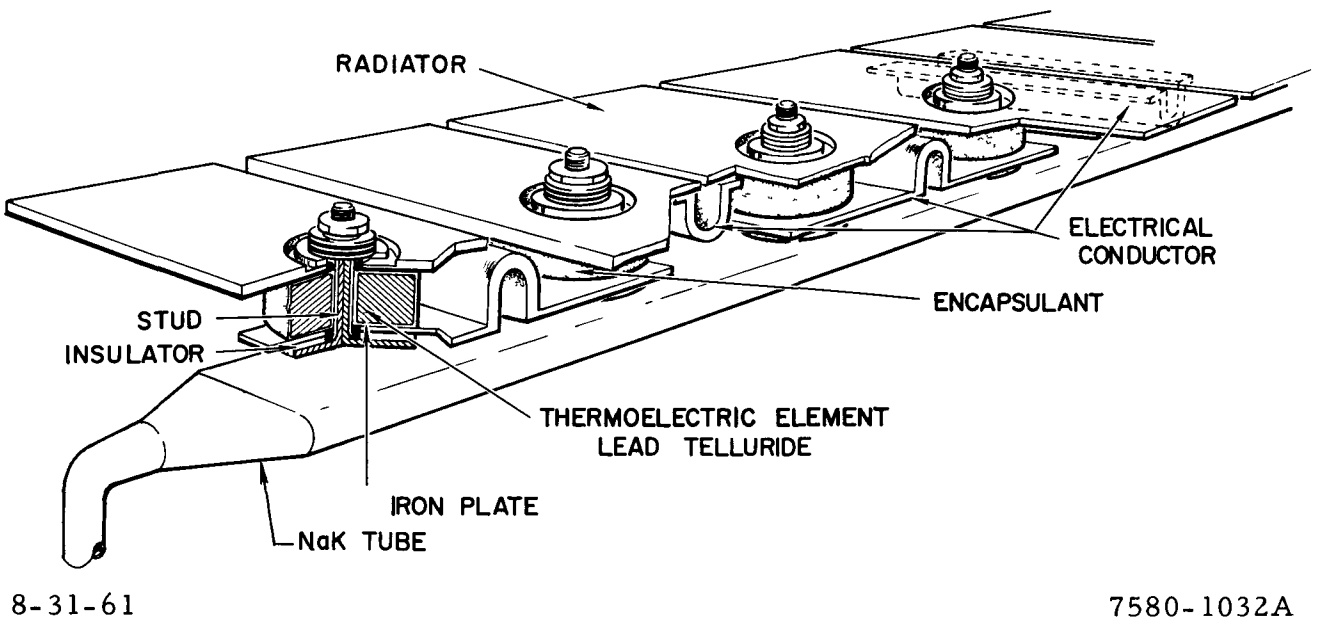

Figure 3. Thermoelectric Converter Module

effect on the thermoelectric properties of the lead telluride. Low-carbon steel (SAE 1015) caps which were used served the dual purpose of providing convenient electrical contacts and of preventing contamination of the lead telluride. The caps were cleaned and coated with a thin film of lead telluride and were then hot pressed on to the lead telluride pellets in an inert atmosphere. The hot pressing operation was generally referred to as contacting because of the electrical contact function of the caps.

The mechanical properties of lead telluride are rather poor. The material is much more shock and vibration resistant under compression than in tension. The original element design provided for a drilled hole through each element to allow a stud brazed to the NaK tube to extend through the element. Compression loading was provided by a Belleville washer under a nut installed on the stud. A later design modification eliminated the necessity of drilling a hole through each element and provided for compression loading of the elements in pairs. In this design the stud was positioned between the elements of each pair and the Belleville washer was replaced by a flat spring bridge across the ends of the two elements.

The upper design operating temperature of the elements closely approach the sublimation point of lead telluride and, in order to achieve a useful element life, it was necessary to inhibit the sublimation. Inhibition was accomplished by encapsulating the exposed lead telluride surface with an impervious ceramic material as the final process performed on the elements before module assembly.

Originally, P-type elements were processed through an annealing operation between machining and encapsulation. This process was discontinued when it was found to provide no lasting beneficial effect.

This report is concerned primarily with statistical evaluation of the previously described process development program. The following sections describe the statistical methods used and the results of the actual analyses.

II. METHODS OF ANALYSIS

A. ANALYSIS OF VARIANCE[5]

Questions concerning the validity of certain procedures, the usefulness of processes, and the significance of test results were continually arising in the process development program. These questions could not be answered by cursory evaluation of data, in many cases, and statistical techniques known as analysis of variance were employed to assure accuracy. Such analyses are based on the separation of the variances of all observations into parts. Each part measures the variation due to some specific source such as the internal variation of the several groups or to the variations between groups. The phrase analysis of variance refers to this division of the variance.

Analysis of variance can be rather complicated depending upon the parameters of the problem under consideration. In this investigation all analyses performed were of the simplest type in which the differences in means for several groups were tested. This type of test is known as one-way analysis of variance or as a single classification problem. Also, all individual observations are classified into one of a finite number of categories or groups. Such classification identifies the analysis as an example of a fixed effects or fixed constants model (Model I) experiment.

B. ONE-WAY ANALYSIS OF VARIANCE, MODEL I[6,7]

1. Variance Ratio

Basically, the analysis of variance is a test of the hypothesis that the means of the groups are all equal. Two estimates, the within-groups variance or s_1^2 and the between-groups variance or s_2^2, of the population variance, σ^2, are computed. The test for significance is based on the variance ratio, F, defined as:

$$F = \frac{s_2^2}{s_1^2} \qquad \ldots(1)$$

If the hypothesis of equal means is true s_1^2 and s_2^2 are unbiased estimates of σ^2 and the variance ratio is close to unity. If the hypothesis is not true the

between-groups variance is appreciably greater than the within-groups variance and the variance ratio is appreciably greater than unity. The size of a significant value depends on several test parameters, one of which is the level of significance, α. Expressed in percent, α represents the probability of making an incorrect decision about the test; i.e., the probability of rejecting the hypothesis when it is true. Two other parameters are known as the degrees of freedom associated with the two estimates of variance. Degrees of freedom are essentially equal to the number of independent observations upon which the estimates are based. The number of degrees of freedom for the between-groups estimate is one less than the number of groups. The number of degrees of freedom for the within-groups estimate is the number of observations less the number of groups.

Tables of the F-statistic are ordinarily given in most statistics books as separate tables for selected levels of significance α. Each table presents a value of F for selected combinations of the two degrees of freedom. The decision of accepting or rejecting the hypothesis is made depending on whether the experimental value of F is greater or less than the value from the table. If greater, the test has shown with a probability, α, of being correct that the group means are not all equal and the hypothesis is rejected. If less, the test has shown with the same probability of being correct that the group means are equal and the hypothesis is accepted.

2. Computations

The variance, s^2, of a group of data is defined as

$$s^2 = \frac{\sum_{i=1}^{n} (X_i - \overline{X})^2}{n - 1} \qquad \ldots(2)$$

where

X_i = individual observations

$\overline{X}$ = mean of all observations within the group

n = number of observations.

If two or more samples are from the same population the variance of the several samples can be averaged to give an estimate of the population variance σ^2. The formula for the within-groups variance is

$$s_1^2 = \frac{\sum_{i=1}^{k} \sum_{\nu=1}^{n_i} (X_{i\nu} - \overline{X}_{i.})^2}{\left(\sum_{i=1}^{k} n_i\right) - k} \qquad \ldots(3)$$

where

$X_{i\nu}$ = ν^{th} observation of the ith group

k = number of groups

n_i = number of observations in the ith group

$$\overline{X}_{i.} = \sum_{\nu=1}^{n_i} \frac{X_{i\nu}}{n_i} = \text{mean for the } i^{th} \text{ group.}$$

The numerator in Equation 3 is referred to as the within-group sum of squares, the denominator is the number of degrees of freedom, and the entire expression is the within-groups mean square or within-groups variance.

The population variance, σ^2, may also be estimated from the variance of the means of the several groups. The variance of the means is an estimate of σ^2/n. Therefore, the variance of the means multiplied by n is an estimate of σ^2. When the number of observations is not the same in all groups, the formula for the between-groups variance is

$$s_2^2 = \frac{\sum_{i=1}^{k} n_i (\overline{X}_{i.} - \overline{X}_{..})^2}{k - 1} \qquad \ldots(4)$$

where

k = number of groups

n_i = number of observations in the ith group

$$\bar{X}_{i.} = \sum_{\nu=1}^{n_i} \frac{X_{i\nu}}{n_i} \quad = \text{average for the } i^{th} \text{ group}$$

$$\bar{X}_{..} = \frac{\sum_{i=1}^{k} \sum_{\nu=1}^{n_i} X_{i\nu}}{\sum_{i=1}^{k} n_i} \quad = \text{average of all observations.}$$

The numerator of Equation 4 is referred to as the between-groups sum of squares for means, the denominator is the number of degrees of freedom, and the entire expression is the between-groups mean square for means or between-groups variance.

The variance can be computed directly from Equations 3 and 4, but for machine calculations, identities using totals rather than means are preferable. The between-groups and within-groups sums of squares are equal to the quantities B-C and A-B respectively where A, B, and C are defined as:

$$A = \sum_{i=1}^{k} \sum_{\nu=1}^{n_i} X_{i\nu}^{2} \quad = \text{sum of squares of all observations} \qquad \ldots(5)$$

$$B = \sum_{i=1}^{k} \frac{\left(\sum_{\nu=1}^{n_i} X_{i\nu}\right)^2}{n_i} \quad = \text{sum of squares of group totals, each squared group total being divided by the number in that group} \qquad \ldots(6)$$

$$C = \frac{\left(\sum_{i=1}^{k} \sum_{\nu=1}^{n_i} X_{i\nu}\right)^2}{\sum_{i=1}^{k} n_i} = \text{square of the sum of all observations divided by the total number of observations.} \qquad \ldots(7)$$

The results of computations are usually recorded in an analysis of variance table as shown in Table I.

TABLE I

TYPICAL ANALYSIS OF VARIANCE TABLE

Source of Variance	Sums of Squares	Degrees of Freedom	Mean Squares	Variance Ratio
Between Groups	B-C	k-1	s_2^2	$F = \frac{s_2^2}{s_1^2}$
Within Groups	A-B	$\left(\sum_{i=1}^{k} n_i\right)-k$	s_1^2	
Total	A-C	$\left(\sum_{i=1}^{k} n_i\right)-1$		

C. MULTIPLE COMPARISONS

Although the F-test will show when there are differences among the groups, it will not show which groups are significantly different. A single prechosen pair may be compared but it is invalid to make comparisons suggested by the data because the significance level becomes incorrect. The following discussion is of a procedural system which meets the criterion of accurate significance levels.

If the means are shown to be unequal by the test, it is of interest to determine all possible differences such as $\mu_1 - \mu_2$ as well as all possible linear expressions of the form $c_1\mu_1 + c_2\mu_2 + \ldots + c_k\mu_k$,

where

$$\sum_{i=1}^{k} c_i = 0 \quad .$$

Such forms are called contrasts and are defined as

$$\theta = \sum_{i=1}^{k} c_i \mu_i \qquad \ldots(8)$$

The contrast θ is estimated by

$$H = \sum_{i=1}^{k} c_i \bar{X}_i \qquad \ldots(9)$$

with variance

$$\sigma_H^2 = \sum_{i=1}^{k} c_i^2 \cdot \frac{\sigma^2}{n_i} \qquad \ldots(10)$$

and estimated variance

$$S_H^2 = \sum_{i=1}^{k} c_i \frac{s^2}{n_i} = s^2 \sum_{i=1}^{k} \frac{c_i}{n_i} \quad . \qquad \ldots(11)$$

It can be shown that the probability of the value of θ lying between $H \pm S s_h^2$ is $(1 - \alpha)$ where $(1 - \alpha)$ are the confidence limits for all contrasts θ and where

$S = \sqrt{(k-1)F}$

F = Variance ratio for significance level $(1 - \alpha)$ and degrees of freedom $(k - 1)$ and

$$\left(\sum_{i=1}^{k} n_i - k\right) .$$

For each experiment performed with confidence limits $(1 - \alpha)$, then in a certain number $(1 - \alpha)$, of these experiments, all the statements will be correct. In the remaining experiments, α, one or more of the statements will be incorrect.

In the test for contrasts, if H is greater than Ss_h^2, and consequently the limits do not include zero, then the contrast is significant. If H is smaller than Ss_h^2, and the interval does include zero, the contrast is not significant.

III. ANALYSIS OF PROCESS VARIABLES

A. THE EFFECT OF FURNACE COOLING ON THE ELECTRICAL RESISTANCE OF P-TYPE ELEMENTS

The first process to which thermoelectric elements were subjected was contacting or hot pressing. Electrical contacts of steel (SAE 1015) were pressed onto the pellets of lead telluride at high pressure. The pressing was done in an inert atmosphere in a retort at elevated temperature. After one-half hour the furnace was allowed to cool. As the components of the die and the elements contracted because of the decrease in temperature, the pressure was reduced.

Ordinarily when the temperature was somewhat reduced the remaining pressure was released and the retort was removed from the furnace, and allowed to cool on a rack. In the early stages of the program the last hot press run of the day was allowed to remain in the furnace overnight. A cursory examination of the data indicated a difference in the measured resistance value of elements after hot pressing depending upon whether the element had been furnace or rack cooled.

Accordingly, an analysis of variance calculation was performed upon the best available data. The data were selected to eliminate unwanted variables, in order to eliminate as many variables as possible and to obtain realistic results. The data were from material received as batch No. 58, and were all from single cavity hot press dies. Some of the process variables were not under control at the time and all values of element resistance >500 μ-ohms, i.e., very bad elements were not included. Calculations based on the data[8] are summarized in Table II. Comparison of the variance ratio with the tabular value shows that the means of the two groups of data are significantly different. According to the analysis, there was an effect of furnace cooling which was beneficial.

The data upon which this analysis was based were taken from a group of elements processed at a time in which numerous process variables were being investigated and by a process which was not under control. Because of the appreciable expenditure in time and money required to furnace cool all elements, another analysis of data produced under more closely controlled conditions was

TABLE II

COMPARISON OF THE EFFECT OF FURNACE COOLING VERSUS RACK COOLING ON THE ELECTRICAL RESISTANCE OF P-TYPE ELEMENTS

Quantity	Calculations for First Comparison			Calculations for Second Comparison		
	Furnace Cooled	Rack Cooled	Summations	Furnace Cooled	Rack Cooled	Summations
n	17	17	34	24	57	81
$\sum x$	5,337	6,152	11,489	7,781	18,654	26,435
$\sum x^2$	1,724,825	2,269,086	3,939,931 = A	2,551,135	6,168,446	8,719,581 = A
$\left(\sum x\right)^2/n$	1,675,504	2,226,300	3,901,804 = B	2,522,665	6,104,766	8,627,431 = B
$\bar{x}$	314	362		324	327	
s	56	52	3,882,268 = C	35	28	8,627,274 = C

Source of Variance	Analysis of Variance for First Comparison				Analysis of Variance for Second Comparison			
	Sums of Squares	Degrees of Freedom	Mean Squares	Variance Ratio	Sums of Squares	Degrees of Freedom	Mean Squares	Variance Ratio
Between Groups	19,536	1	19,536	F = 16.4	157	1	157	F = 0.13
Within Groups	38,127	32	1,191	$F_{0.975}(1, 32) = 5.55$	92,150	79	1,166	$F_{0.975}(1, 79) = 5.29$

requested. Data were accumulated for analysis from an entire week of operation. All elements analyzed were from batch No. 64, and all were processed in a standard manner. The only difference was that the last run of each day from each hot press was allowed to cool in the furnace. The other runs were cooled in the rack. Calculations based on the data[8] are given in Table II.

Comparison of the F-ratio shows no significant difference between the two groups. That is, for these data the cooling method had no effect on the electrical resistance of the element.

There is little question as to the validity of the conflicting results of the two analyses. In the first instance, the variance ratio is very much higher than probability would allow and in the second instance the variance ratio is much lower. Therefore, the results must be due to actual differences in the data. A number of differences in the data should be considered in resolving the discrepancy. Different batches of material were tested and the first test was done with elements pressed in a single cavity die while the second test was done with elements pressed in a multicavity die. However, there is no other evidence to support differences on these two accounts.

A possible explanation of the difference may be that as observed in later experiments heating or annealing high resistance elements in an inert atmosphere after processing reduced their resistance. The same effect was not observed in low resistance elements. The general trend as the program advanced was to produce elements of progressively lower resistances. In these cases the average resistance of the elements produced during the period of the first test was $\sim$450 μ-ohms and during the period of the second test the average resistance was 325 μ-ohms. The slow cooling rate of the elements left in the furnace may have had an annealing effect which would show up on the high resistance elements of the first test but not on the low resistance elements of the second test.

In accordance with these results, no action was taken to institute furnace or slow cooling for all elements. The data from the second test was more representative of current and future processing capabilities and the conclusion that slow cooling was not necessary was reached.

B. THE EFFECT OF ANNEALING ON THE ELECTRICAL RESISTANCE OF P-TYPE ELEMENTS

Early in the program observations indicated that the electrical resistance of P-type elements was decreased by the encapsulation process. The process involved a heating cycle and the decreased resistance effect was attributed to the annealing effect of this heat cycle. The various other portions of the procedure such as handling, preparation, and application had been shown to cause increases, if any change, rather than decreases in resistance.

The decision to institute a heating cycle before encapsulation was based on this annealing effect. The theory was that an optimum annealing temperature could be determined which might be different from the heating temperature for encapsulation.

The first measurements made on the effect of annealing indicated that the annealing process decreased the electrical resistance of elements. These measurements were made immediately after annealing before any subsequent processing. Comparison of values before and after annealing indicated decreased resistance. Subsequent findings indicated that the encapsulation process was increasing rather than decreasing element resistance. In accordance with these findings, all available data were analyzed to determine if the annealing process actually produced better elements or if the annealing effect was only transitory.

Two groups of data were available for analysis. The first group was for reference process elements from batch No. 62, some annealed and some not annealed, and the second group was for a number of contacted elements rejected for high resistance which were given subsequent processing including annealing. In addition, data were collected from a statistically designed experiment which was conducted. Seventy-two elements from batch No. 68 were divided into two subgroups which were processed and measured together; one subgroup of elements was annealed while the other subgroup was not annealed.

1. Reference Process Control Elements

In an attempt to eliminate unknown effects, only elements from batch No. 62 were analyzed, although much more data were available, especially on unannealed elements. No elements from previous batches had been annealed and elements from subsequent batches had not yet completed processing. Twenty-four of these elements were annealed, and thirty-three were not annealed. The

after-contacting data were analyzed to determine whether both groups belonged to the same population before annealing. The after-encapsulation data were analyzed to determine the effect of annealing. Calculations based on the data[8] are presented in Table III.

The variance ratios show that both subgroups were essentially the same before annealing but were significantly different after annealing. However, the effect of annealing was found to be significant in an undesirable way as the average resistance of the annealed elements was higher than that of the unannealed elements.

2. Contacted Elements Rejected for High Resistance

Means were calculated for the electrical resistance of the elements after each step in processing. Differences were so great that calculations were not necessary to show that the changes were significant. The data[8] showed a typical drop during annealing followed by a typical increase due to encapsulation.

3. Annealing Experiment

Because the preceding data were not obtained in a controlled experiment, unknown process and measurement variables could influence the results. An experiment was designed to eliminate unknown variables by measuring and processing a group of elements together, except for the annealing process. Seventy-two elements from batch No. 68 were set aside after machining and measured for electrical resistance. The elements in three groups of twelve were annealed. The remaining elements in three groups of twelve were not annealed. Then all six groups of twelve were measured, encapsulated, and remeasured. This procedure was adopted to eliminate effects due to unknown variables. Differences found after encapsulation of the elements were due to the annealing operation only. Calculations based on the data[8] are presented in Table IV.

The variance ratios show that the groups were identical initially but different after processing. The effect of annealing was found to be significant in an undesirable way and, as in the preceding experiment, the average resistance of the annealed elements was higher than that of the unannealed elements.

The results of this analysis were not entirely consistent and this inconsistency is shown in Figure 4. Some elements showed reduced resistance after annealing but in all cases the effect was only transitory and not of lasting benefit.

TABLE III

EVALUATION OF THE EFFECT OF ANNEALING ON THE ELECTRICAL RESISTANCE OF CONTACTED P-TYPE ELEMENTS

Quantity	Calculations Before Annealing			Calculations After Encapsulating		
	Not to be Annealed	To be Annealed	Summations	Not Annealed	Annealed	Summations
n	33	24	57	33	24	57
$\sum x$	10,704	7,992	18,696	15,003	11,999	27,002
$\sum x^2$	3,503,406	2,692,126	6,195,532 = A	6,904,287	6,186,191	13,090,478 = A
$\left(\sum x\right)^2/n$	3,471,988	2,661,336	6,133,324 = B	6,820,909	5,999,000	12,819,909 = B
$\bar{x}$	324	333		454	500	
$n - 1$	31	37	6,132,288 = C	51	90	12,791,368 = C

Source of Variance	Analysis of Variance Before Annealing				Analysis of Variance After Encapsulating			
	Sums of Squares	Degrees of Freedom	Mean Squares	Variance Ratio	Sums of Squares	Degrees of Freedom	Mean Squares	Variance Ratio
Between Groups	1,036	1	1,036	$F = 0.89$	28,541	1	28,541	$F = 5.8$
Within Groups	62,208	55	1,131	$F_{0.975}(1, 55) = 5.33$	270,569	55	4,919	$F_{0.975}(1, 55) = 5.33$

TABLE IV

EVALUATION OF THE EFFECT OF ANNEALING ON THE ELECTRICAL RESISTANCE OF MACHINED P-TYPE ELEMENTS

Quantity	Calculations After Machining			Calculations After Annealing			Calculations After Encapsulating		
	Not Annealed	Annealed	Summations	Not Annealed	Annealed	Summations	Not Annealed	Annealed	Summations
n	36	36	72	36	36	72	36	36	72
$\sum x$	16,090	16,823	32,913	16,932	26,828	43,760	19,393	28,477	47,870
$\sum x^2$	7,290,156	8,089,125	15,379,281 = A	8,064,688	23,890,365	21,955,053 = A	10,688,199	24,883,639	35,571,838 = A
$(\sum x)^2/n$	7,191,336	7,861,481	15,052,817 = B	7,963,684	19,992,822	27,956,506 = B	10,446,901	22,526,098	32,972,999 = B
$\bar{x}$	447	467	15,045,355 = C	470	745	26,596,355 = C	539	791	31,826,901 = C
s	53	81		54	334		83	260	

Source of Variance	Analysis of Variance After Machining				Analysis of Variance After Annealing				Analysis of Variance After Encapsulating			
	Sums of Squares	Degrees of Freedom	Mean Squares	Variance Ratio	Sums of Squares	Degrees of Freedom	Mean Squares	Variance Ratio	Sums of Squares	Degrees of Freedom	Mean Squares	Variance Ratio
Between Groups	7,462	1	7,462	F = 1.6	1,360,151	1	1,360,151	F = 23.8	1,146,098	1	1,146,098	F = 30.9
Within Groups	326,464	70	4,664	$F_{0.975}(1, 70) = 3.99$	3,998,547	70	57,122	$F_{0.975}(1, 70) = 3.99$	2,598,839	70	37,126	$F_{0.975}(1, 70) = 3.99$

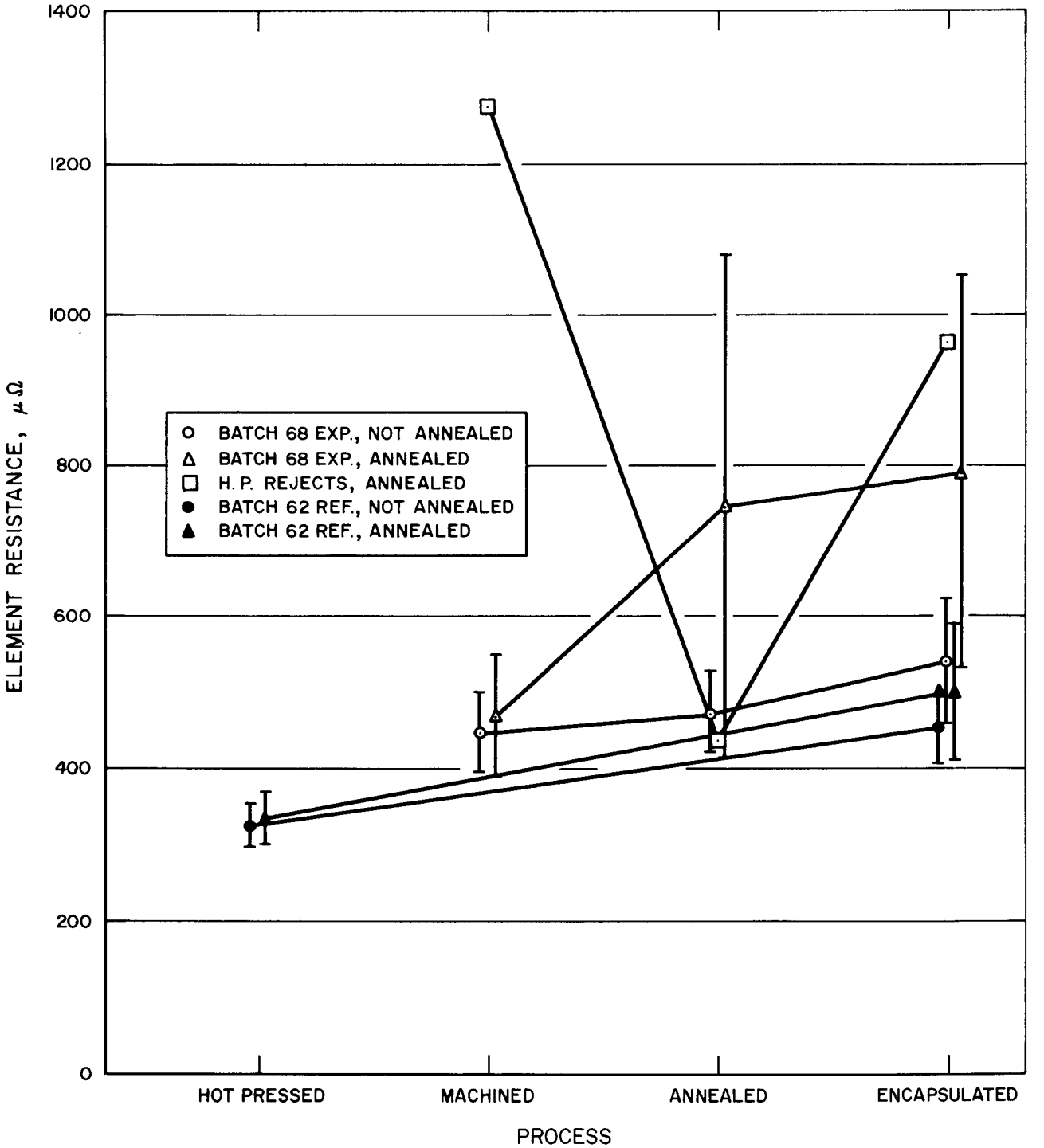

(7561-1027)

Figure 4. Effects of Annealing on Element Resistance

This was especially true for the elements previously rejected because of high resistance. The resistance of these elements was reduced after annealing but was again very high after encapsulation. The only effect of annealing on the more normal elements was that of increased resistance. The annealing operation was discontinued as a regular process step as the result of the analysis.

C. THE EFFECT OF MACHINING ON ELEMENT DIMENSIONS

In an effort to eliminate unacceptable elements as early in the processing as possible to reduce costly operations, many measurements were performed which later proved superfluous. One such set of measurements was the dimensional inspection performed in the early stages of the program after every operation which might affect dimensions. An investigation was conducted to determine the need for dimensional measurements before and after machining and to determine the accuracy in the measurement technique.

Data[8] used for analysis represent the difference of two measurements made on the same element. In the case of the determination of measurement errors, the dimensions of the same elements were measured on two different days. The data on P- and N-type elements were separated because of possible differences due to material. The data represent the absolute value of the difference between the element dimensions measured before and after machining. The machining operation consisted of drilling an axial hole through the element.

The analysis of variance was performed to determine if the effects on dimensions due to machining were significantly different from the inherent error in the measurement technique. Calculations based on the data[8] are given in Table V.

The variance ratios show there was no significant difference between the measurements made before and after machining of elements and the duplicate measurements made on the same elements. Any differences observed can be easily explained by errors in the measurement technique. The dimensional measurements before machining were discontinued as a result of the analysis.

D. THE EFFECT OF MACHINING ON ELEMENT RESISTANCE

The original design of the thermoelectric generator employed the elements as structural members. The elements were to be attached to the NaK tube and

TABLE V

EVALUATION OF THE NEED FOR MEASUREMENTS OF ELEMENT LENGTH AND PARALLELISM BEFORE AND AFTER MACHINING

Quantity	Calculations for Element Length				Calculations for Element Parallelism			
	Measurement Error	P-Type Elements	N-Type Elements	Summations	Measurement Error	P-Type Elements	N-Type Elements	Summations
n	61	127	76	264	65	124	86	275
$\sum x$	68	148	92	308	53	106	73	232
$\sum x^2$	148	344	174	666 = A	77	224	131	432 = A
$(\sum x)^2/n$	75.8	172.5	111.4	359.7 = B	43.2	90.6	62.0	195.8 = B
$\bar{x}$	1.12	1.17	1.21	359.3 = C	0.81	0.85	1.18	195.7 = C
s	1.10	1.17	0.91		0.72	1.04	0.90	

Source of Variance	Analysis of Variance for Element Length				Analysis of Variance for Element Parallelism			
	Sums of Squares	Degrees of Freedom	Mean Squares	Variance Ratio	Sums of Squares	Degrees of Freedom	Mean Squares	Variance Ratio
Between Groups	0.4	2	0.2	$F = 0.17$	0.1	2	0.05	$F = 0.06$
Within Groups	306.3	261	1.17	$F_{0.975}(2, 261) = 4.61$	236.2	272	0.87	$F_{0.975}(2, 272) = 4.61$

were to support themselves and the individual radiators. Such a design would be feasible for material having good structural properties, but was soon proved impractical for lead telluride.

The reference design to which most of the elements on the program were fabricated provided for each element to be held in compression by means of a Belleville washer backed up by a nut on a stud which passed through the element and was brazed to the NaK tube. This design eliminated the undesirable feature of the tensile loading onthe elements but necessitated the additional operation of drilling the hole through each element. Experience had shown that each operation performed on an element, especially of the P-type, increased the electrical resistance of the element. In addition to the increase in resistance, the operation itself was costly and time consuming.

The T^2 modification (Teeter-Totter) was designed to utilize a similar stud as a supporting member. The stud was placed between the elements and supported them in pairs. A flat spring bridge across a pair of elements was held in compression by a nut screwed onto the stud. In order to keep the weight of the assembly at a minimum, the radiator was located off center of the elements so the elements could be close together. This feature raised questions as to whether the advantages of the second modification outweighed its disadvantages. An investigation was performed to determine if there was a permanent adverse effect of the machining on element resistance.

The data[8] collected did not represent a controlled statistical experiment but did represent all applicable data available at the time the analysis was performed. The data were from all the machined and nonmachined encapsulated elements that were processed during the same period of time. The comparison was made after encapsulation, rather than before, to eliminate the possibility that differences due to machining were transient. Previous experience indicated that subsequent processing could change the results of such analyses. The results applied to finished elements as encapsulation was the final process for element production. Calculations from the data[8] are presented in Table VI.

The high values of the variance ratio show that machining causes a tremendously significant effect on the resistance of both N- and P-type elements. The difference is especially obvious for P-type elements with average resistance values of 415 and 319 μ-ohms for drilled and undrilled elements, respectively.

TABLE VI

EVALUATION OF THE EFFECT OF MACHINING ON THE ELECTRICAL RESISTANCE OF THERMOELECTRIC ELEMENTS

Quantity	Calculations for N-Type Elements			Calculations for P-Type Elements		
	Drilled	Not Drilled	Summations	Drilled	Not Drilled	Summations
n	120	96	216	116	55	171
$\sum x$	20,064	13,156	33,220	48,132	17,572	65,704
$\sum x^2$	3,482,886	1,843,408	5,326,294 = A	20,336,096	5,654,420	25,990,516 = A
$\left(\sum x\right)^2/n$	3,354,701	1,802,920	5,157,621 = B	19,971,461	5,614,094	25,585,555 = B
$\bar{x}$	167	137	5,109,112 = C	415	319	25,245,705 = C
s	33	21		56	27	

Source of Variance	Analysis of Variance for N-Type Elements				Analysis of Variance for P-Type Elements			
	Sums of Squares	Degrees of Freedom	Mean Squares	Variance Ratio	Sums of Squares	Degrees of Freedom	Mean Squares	Variance Ratio
Between Groups	48,508	1	48,508	F = 62	339,850	1	339,850	F = 141
Within Groups	168,673	214	708	$F_{0.975}$ (1, 214) = 5.0	404,961	169	2,396	$F_{0.975}$ (1, 169) = 5.0

The difference is significant but not so obvious for N-type elements. These results confirm all previous experience which indicated that any operation performed on an element tends to increase the resistance of the element. Another interesting result which confirmed previous experience was that not only were the average resistance values higher but the spread of the data as measured by standard deviation was also greater for the elements which were drilled. Although this analysis showed that the T^2 design offered a significant advantage in regard to overall module resistance, the design could not be exclusively adopted because of other considerations. However, the analyses showed that a module of the T^2 design could be expected to have a lower resistance.

E. THE EFFECT OF POSITION IN THE HOT PRESS DIE ON ELEMENT RESISTANCE AND DIMENSIONS

The first process for the production of thermoelectric elements is hot pressing. The operation consists of heating the elements and contacts in a die within a furnace held at high temperature. To speed up production dies were made containing three cavities each of which held four elements. Thus, twelve elements could be hot pressed in a single run.

With such a process, several questions arose regarding uniformity of hot pressing conditions for each element. Differences in element or steel contact cap length could cause differences in applied pressure in the three cavities. It is likely that a longitudinal temperature gradient existed which could cause elements in the same cavity to be processed at different temperatures. The die is single acting, emphasizing the friction effects which cause a difference in pressure on each element within a given cavity.

Differences in pressure between cavities were believed to be negligible because the thermoelectric material is quite plastic at hot pressing temperature. However, it is likely that differences within a cavity did exist and with the apparatus then in use this condition could not easily be corrected. An analysis was conducted to determine if differences were significant and were sufficiently great to warrant a change in the hot pressing technique.

An analysis performed in the early stages of the program had shown that differences in electrical resistance of the elements due to position of the elements in the die for hot pressing were significant. Highest resistance values were observed for elements processed in position 4 at the bottom of the die with

successively lower values for elements processed in positions 3, 2, and 1 at the top of the die. However, the differences were not sufficiently great to warrant a change in hot pressing technique at that time.

A great deal of improvement in process control was achieved as the program continued with an attendant reduction in the variation in element resistance. The average resistance value of the hot pressed elements was progressively reduced as a result of improvement in techniques. In order to determine whether a change in hot pressing technique was warranted after adoption of the improved methods, an analysis was performed to ascertain if the differences in element resistance due to die position still existed and the magnitude of the resistance differences was evaluated.

The analysis of element resistance was based on an extensive group of data consisting of all reference production from ten consecutive days for P-type elements and from fourteen consecutive days for N-type elements. More data were available but their addition would have had but little effect on the conclusions. The data were screened to eliminate obviously abnormal values which would tend to obscure the results and only data from complete hot press groups of twelve elements were included to minimize bias. Calculations based on the data[8] are presented in Table VII.

The variance ratios show that the position of the elements in the hot press die was responsible for considerable variation in electrical resistance of the elements. The F-test explained in Section II, when applied to the data,[8] verified that die position had a substantial effect on electrical resistance of the elements but failed to show the significance of any position in relation to the other positions. Further analysis of the data was made to determine the pattern of significance of die position. Calculation of the estimate of the contrast, H, and the probability limits of H, $S_H \; 2\sqrt{(K-1)\, F_{0.975}(f_1, f_2)}$, was necessary to determine whether the contrast was significant or not. If the limits included zero, the contrast was not considered significant. The results of these calculations are presented in Table VIII.

The conclusions drawn from the calculations were that for P-type elements positions 1 and 4 were equivalent, positions 2 and 3 were equivalent, and positions 1 and 4 were significantly different from positions 2 and 3, and for N-type elements positions 1, 2, and 3 were equivalent but significantly different from

TABLE VII

EVALUATION OF THE EFFECT OF HOT PRESS DIE POSITION ON THE ELECTRICAL RESISTANCE OF THERMOELECTRIC ELEMENTS

Quantity	Calculations for P-Type Elements					Calculations for N-Type Elements				
	Position 1	Position 2	Position 3	Position 4	Summations	Position 1	Position 2	Position 3	Position 4	Summations
n	135	135	135	134	540	66	66	66	66	264
$\sum x$	47,735	45,686	45,726	48,255	187,402	8,565	8,625	9,016	10,470	36,676
$\sum x^2$	17,319,365	15,596,040	15,680,322	17,656,645	66,352,372 = A	1,123,319	1,136,349	1,248,742	1,679,376	5,187,786 = A
$(\sum x)^2/n$	16,878,742	15,460,819	15,487,904	17,248,482	65,075,947 = B	1,111,503	1,127,131	1,231,640	1,660,923	5,131,197 = B
$\bar{x}$	354	338	339	357	65,036,129 = C	130	131	137	159	5,095,186 = C
s	57.3	41.7	37.9	55.2		13.5	11.9	16.2	16.8	

Source of Variance	Analysis of Variance for P-Type Elements				Analysis of Variance for N-Type Elements			
	Sums of Squares	Degrees of Freedom	Mean Squares	Variance Ratio	Sums of Squares	Degrees of Freedom	Mean Squares	Variance Ratio
Between Groups	39,818	3	13,273	F = 5.57	36,011	3	12,004	F = 55
Within Groups	1,276,425	536	2,381	$F_{0.975}(3, 536) = 3.12$	56,589	260	217.6	$F_{0.975}(3, 260) = 3.12$

TABLE VIII

EVALUATION OF THE SIGNIFICANCE OF HOT PRESS DIE POSITION ON THE ELECTRICAL RESISTANCE OF THERMOELECTRIC ELEMENTS

Population Contrast	Coefficients				Elements					
					P-Type			N-Type		
	C_1	C_2	C_3	C_4	H	Limits	Significant	H	Limits	Significant
1 vs 2, 3, & 4	-3	1	1	1	-28	±44.4	No	37	±19.1	Yes
2 vs 1, 3, & 4	1	-3	1	1	36	±44.4	No	33	±19.1	Yes
3 vs 1, 2, & 4	1	1	-3	1	32	±44.4	No	9	±19.1	No
4 vs 1, 2, & 3	1	1	1	-3	-40	±44.4	No	79	±19.1	Yes
1 vs 2 & 3	-2	1	1	0	-31	±31.4	No	8	±13.5	No
1 vs 3 & 4	-2	0	1	1	-12	±31.4	No	30	±13.5	Yes
1 vs 2 & 4	-2	1	0	1	-13	±31.4	No	36	±13.5	Yes
2 vs 1 & 3	1	-2	1	0	19	±31.4	No	5	±13.5	No
2 vs 1 & 4	1	-2	0	1	35	±31.4	Yes	27	±13.5	Yes
2 vs 3 & 4	0	-2	1	1	20	±31.4	No	34	±13.5	Yes
3 vs 1 & 2	1	1	-2	0	14	±31.4	No	-13	±13.5	No
3 vs 1 & 4	1	0	-2	1	33	±31.4	Yes	15	±13.5	Yes
3 vs 2 & $	1	0	-2	1	17	±31.4	No	16	±13.5	Yes
4 vs 1 & 2	1	1	0	-2	-19	±31.4	No	-57	±13.5	Yes
4 vs 1 & 3	1	0	1	-2	-18	±31.4	No	-50	±13.5	Yes
4 vs 2 & 3	0	1	1	-2	-37	±31.4	Yes	-51	±13.5	Yes
1 vs 2	-1	1	0	0	-16	±18.1	No	- 1	± 7.8	No
1 vs 3	-1	0	1	0	-15	±18.1	No	- 7	± 7.8	No
1 vs 4	-1	0	0	1	3	±18.1	No	-29	± 7.8	Yes
2 vs 3	0	-1	1	0	1	±18.1	No	- 6	± 7.8	No
2 vs 4	0	-1	0	1	19	±18.1	Yes	-28	± 7.8	Yes
3 vs 4	0	0	-1	1	18	±18.1	No	-22	± 7.8	Yes
1 & 2 vs 3 & 4	-1	-1	1	1	4	±25.6	No	Not Calculated		-
1 & 3 vs 2 & 4	-1	1	-1	1	2	±25.6	No	Not Calculated		-
1 & 4 vs 2 & 3	1	-1	-1	1	34	±25.6	Yes	Not Calculated		-

position 4. The differences, although apparent, were not overly large. The average resistance of P-type elements pressed in positions 1 and 4 was ~5% higher than that of elements pressed in positions 2 and 3 and the average resistance of N-type elements pressed in position 4 was ~15% higher than that of elements pressed in the other positions. The decision to continue the process without change was made because of the difficulty of changing the procedure and the relative insignificance of the differences in resistance caused by the established method.

The analysis of the effect of position of the elements in the hot press die on element length was based on all dimensional data for hot pressed elements available at the time. These measurements were taken as part of the standard series of quality control measurements on reference elements early in the program but were discontinued when found to be essentially a duplication of the measurements taken after subsequent processing. Calculations based on the data[8] are presented in Table IX.

The variance ratios show that the effect of position of the elements in the hot press die was not significant for element length, and consequently, the analysis did not influence the decision to continue using the established processing techniques.

F. THE EFFECT OF CONTACT VAPOR COATING ON THE ELECTRICAL RESISTANCE OF P-TYPE ELEMENTS

Many different means for contacting lead telluride elements were investigated in the initial stages of the process development effort. Precoating the contacts with lead telluride before hot pressing the contacts to the pellets helped to produce elements with low resistance. The theory was to minimize electrical resistance between the contact and the thermoelectric material by bonding lead telluride to the existing lead telluride on the contacts. The coating process was set up as a reference process step when large scale production of elements was started. The contacts were cleaned, placed under an inert fluid to inhibit oxidation, dried, and then coated with lead telluride by vapor deposition prior to hot pressing.

The utility of the vapor deposition step was questioned as the improved production processes resulted in the production of elements of progressively lower resistance. A few isolated cases of uncoated elements with low resistance seemed to indicate that the step was unnecessary and seven hot press runs

TABLE IX

EVALUATION OF THE EFFECT OF HOT PRESS DIE POSITION ON THE LENGTH OF THERMOELECTRIC ELEMENTS

Quantity	Calculations for P-Type Elements					Calculations for N-Type Elements				
	Position 1	Position 2	Position 3	Position 4	Summations	Position 1	Position 2	Position 3	Position 4	Summations
n	25	25	25	25	100	18	18	18	18	72
$\sum x$	5,150.5	5,143.0	5,148.5	5,118.5	20,560.5	3,750.5	3,734.5	3,732.0	3,700.5	14,915.5
$\sum x^2$	1,061,283.8	1,058,170.5	1,060,347.8	1,048,110.8	4,227,913 = A	701,577.2	774,922.2	773,927.5	760,761.1	3,091,336.2 = A
$(\sum x)^2/n$	1,061,106.0	1,058,018.0	1,060,282.1	1,047,961.7	4,227,368 = B	781,458.4	774,805.0	773,768.0	760,761.1	3,090,792.5 = B
$\bar{x}$	206.0	205.7	205.9	204.7		208.4	207.5	207.3	205.6	
s	2.7	2.5	1.6	2.5	4,227,342 = C	2.6	2.6	3.1	3.0	3,090,719.5 = C

Source of Variance	Analysis of Variance for P-Type Elements				Analysis of Variance for N-Type Elements			
	Sums of Squares	Degrees of Freedom	Mean Squares	Variance Ratio	Sums of Squares	Degrees of Freedom	Mean Squares	Variance Ratio
Between Groups	26.0	3	8.7	F = 1.53	73.0	3	24.3	F = 3.04
Within Groups	545.0	96	5.7	$F_{0.975}(3, 96) = 3.3$	543.7	68	8.0	$F_{0.975}(3, 68) = 3.32$

were made with uncoated contacts to prove or disprove the validity of the vapor deposition process step. Four of the runs were made with elements from one batch of lead telluride and three runs were made with elements from another batch. The statistical analysis of the results was based on the difference in element resistance between these runs and reference runs made with vapor deposited contacts from the same batches. Analysis of variance showed no significant difference between any of the coated or uncoated groups, from either of the two batches of thermoelectric material, i.e., no significant beneficial effect due to the vapor coating process step was found. This analysis substantiated the previous isolated cases in which uncoated contacts yielded resistance values equivalent to those of the coated contacts.

The conclusion was qualified somewhat by the conditions under which the data were obtained. No reference runs could be made for comparison purposes at the time the hot press runs were made because vapor deposited contacts were not available. Consequently, the comparison was made with reference runs made at different times. The possibility existed that the data were not truly representative of the process step being studied since there could have been differences between hot press runs. Such variations would more likely tend to indicate differences where none existed but they could also obscure differences which did actually exist.

A statistically designed experiment was set up to obtain a reliable result with which to back up the decision to eliminate the vapor deposition process step. The production of elements for this test during one day which consisted of 4 runs in each of 3 hot presses was analyzed. Each cavity of the three-cavity dies was loaded with 4 elements for a total of 12 elements per run and a total of 144 elements for the experiment. Half of the contacts in each loading were coated and the remaining half were uncoated. The arrangement[8] of the two types of contacts in the dies was varied from run to run so that the same number of each type was pressed in each of the four die positions. The effects of the unwanted variables such as time, position in the hot press die, and hot press run were eliminated by these methods, and any differences would exhibit equal effect on elements with both types of contacts.

Analyses were done after hot pressing and after machining to determine if the results were dependent upon subsequent processing. Analyses would have

been performed on the elements when encapsulated but there was insufficient time to obtain the data before the program was closed. Calculations based on the data[8] are contained in Table X.

The variance ratios show in all cases that vapor coating of contacts produces no beneficial effect on element resistance. The decision to eliminate the vapor deposition process step was validated by the analysis.

TABLE X

EVALUATION OF THE EFFECT OF COATED CONTACTS ON THE ELECTRICAL RESISTANCE OF P-TYPE ELEMENTS

Quantity	Calculations After Hot Pressing			Calculations After Machining		
	Coated	Not Coated	Summations	Coated	Not Coated	Summations
n	72	71	143	72	71	143
$\sum x$	23,098	22,262	45,360	29,057	28,251	57,308
$\sum x^2$	7,481,198	7,077,312	14,558,510	11,868,985	11,414,765	23,283,750 = A
$(\sum x)^2/n$	7,409,967	6,980,234	14,390,201	11,726,517	11,241,113	22,967,630 = B
$\bar{x}$	321	314		404	398	
s	31	32	14,388,319 = C	45	50	22,966,481 = C

Source of Variance	Analysis of Variance After Hot Pressing				Analysis of Variance After Machining			
	Sums of Squares	Degrees of Freedom	Mean Squares	Variance Ratio	Sums of Squares	Degrees of Freedom	Mean Squares	Variance Ratio
Between Groups	1,882	1	1882	F = 1.58	1,149	1	1,149	F = 0.51
Within Groups	168,309	141	1194	$F_{0.975}(1, 141) = 5.0$	316,120	141	2,242	$F_{0.975}(1, 141) = 5.0$

IV. SUMMARY AND CONCLUSIONS

Individual conclusions for the various statistical analyses have been previously outlined. Some general results of the analytical work are:

1) Beneficial or detrimental effects of processes were determined.

2) Some process steps were shown to be unnecessary and their elimination was confirmed statistically.

3) Relative importance of variables was established.

4) Large numbers of measurements were shown to be superfluous and their reduction was justified statistically.

Some of these questions were completely buried in the mass of data obtained during the program. Use of statistical techniques enables the separation of the important from the unimportant and the determination of those items which were significant. In some cases analyses were run to substantiate engineering judgment which had to be exercised many times without detailed analysis because of schedule demands.

REFERENCES

1. J. R. Wetch and H. M. Dieckamp, "The Practical Application of Space Nuclear Power in the 1960s," International Astronautical Congress, Stockholm, Sweden, August 15-20, 1960

2. R. Balent, "Nuclear Auxiliary Power - Watts to Megawatts, SNAP," International Symposium on Aero-Space Nuclear Propulsion, October 23-27, 1961, Las Vegas, Nevada

3. F. R. Bennett and K. Langrod, "Process Development and Fabrication of PbTe Thermoelectric Elements," NAA-SR-7036, October 30, 1962

4. G. W. Meyers and P. P. King, "Design, Analysis, and Fabrication of PbTe Modules," NAA-SR-7021, June 1, 1962

5. H. Scheffé, "The Analysis of Variance," Wiley & Sons, 1959

6. W. J. Dixson and F. J. Massy, Jr., "Introduction to Statistical Analysis," McGraw-Hill, 1957

7. K. A. Brownlee, "Statistical Theory and Methodology in Science and Engineering," Wiley & Sons, 1960

8. (Unpublished MS, Atomics International, Canoga Park, California, 1962)