NAA-SR-8401

COPY

325
7-15-63

MASTER

HALLAM NUCLEAR POWER FACILITY – REACTOR OPERATIONS ANALYSIS PROGRAM SEMIANNUAL PROGRESS REPORT NO. 1, SEPTEMBER 1, 1962 THROUGH FEBRUARY 28, 1963

ATOMICS INTERNATIONAL

A DIVISION OF NORTH AMERICAN AVIATION, INC.

DISCLAIMER

This report was prepared as an account of work sponsored by an agency of the United States Government. Neither the United States Government nor any agency thereof, nor any of their employees, makes any warranty, express or implied, or assumes any legal liability or responsibility for the accuracy, completeness, or usefulness of any information, apparatus, product, or process disclosed, or represents that its use would not infringe privately owned rights. Reference herein to any specific commercial product, process, or service by trade name, trademark, manufacturer, or otherwise does not necessarily constitute or imply its endorsement, recommendation, or favoring by the United States Government or any agency thereof. The views and opinions of authors expressed herein do not necessarily state or reflect those of the United States Government or any agency thereof.

DISCLAIMER

Portions of this document may be illegible in electronic image products. Images are produced from the best available original document.

LEGAL NOTICE

This report was prepared as an account of Government sponsored work. Neither the United States, nor the Commission, nor any person acting on behalf of the Commission:

A. Makes any warranty or representation, express or implied, with respect to the accuracy, completeness, or usefulness of the information contained in this report, or that the use of any information, apparatus, method, or process disclosed in this report may not infringe privately owned rights; or

B. Assumes any liabilities with respect to the use of, or for damages resulting from the use of information, apparatus, method, or process disclosed in this report.

As used in the above, "person acting on behalf of the Commission" includes any employee or contractor of the Commission, or employee of such contractor, to the extent that such employee or contractor of the Commission, or employee of such contractor prepares, disseminates, or provides access to, any information pursuant to his employment or contract with the Commission, or his employment with such contractor.

Price $2.75
Available from the Office of Technical Services
Department of Commerce
Washington 25, D. C.

NAA-SR-8401
REACTOR TECHNOLOGY
151 PAGES

HALLAM NUCLEAR POWER FACILITY - REACTOR OPERATIONS ANALYSIS PROGRAM

SEMIANNUAL PROGRESS REPORT NO. 1, SEPTEMBER 1, 1962 THROUGH FEBRUARY 28, 1963

By

O. J. FOUST
C. L. LARSON
R. M. MILLS
D. I. MONNIE
R. J. WALTERS
O. G. JENKINS, JR
R. R. STIENS

This document is
PUBLICLY RELEASABLE
David Hamrin OSTI
Authorizing Official
Date 9/6/2016

ATOMICS INTERNATIONAL

A DIVISION OF NORTH AMERICAN AVIATION, INC.
P.O. BOX 309 CANOGA PARK, CALIFORNIA

CONTRACT: AT(11-1)-GEN-8
ISSUED: JUL 1 1963

DISTRIBUTION

This report has been distributed according to the category "Reactor Technology" as given in "Standard Distribution Lists for Unclassified Scientific and Technical Reports" TID-4500 (19th Ed.), February 1, 1963. A total of 750 copies were printed.

CONTENTS

		Page
	Abstract	7
I.	Introduction to the Hallam Nuclear Power Facility-Reactor Operations Analyses Program	9
	A. Preface	9
	B. Program Objectives	9
	C. Work Tasks	11
II.	Report Summary	14
	A. Reactivity History	14
	B. Control Rods	14
	C. Fuel Management	14
	D. Other Core Analyses	15
	E. Main Heat Transfer System	16
	F. Sodium Service System	17
	G. Components Reliability	17
III.	Description of Reactor Core	19
	A. General	19
	B. Fuel Elements	22
	C. Moderator Elements	22
	D. Control Rods	22
	E. Miscellaneous Core Elements	26
	F. Reactor Vessel Structure	27
IV.	Reactivity History	32
	A. Summary	32
	B. Procedure	34
	C. Analytical Method	35
V.	Control Rods	42
	A. Summary of Control Rod Testing and Operation	42
	B. Operating Configuration	43
	C. HNPF-ROAP Methods for Analyzing Control Rods	44
VI.	Fuel Management	49
	A. Initial Program	49
	B. Fuel Management Philosophy	49
	C. Record of Individual Fuel Element Exposure	52
	D. Fuel Examination Program	53

CONTENTS

		Page
VII.	Other Core Analyses	56
	A. In-Core Temperatures	56
	B. Analog Computer Application	58
VIII.	Health Physics	65
IX.	Main Heat Transfer System	66
	A. System Description	66
	B. Synopsis of Performance History	68
	C. Free Surface Sodium Pump Performance	68
	D. Intermediate Heat Exchanger Performance	70
	E. Steam Generator Performance	73
	F. Throttle Valve Performance	75
	G. Hydraulic Characteristics	75
	H. Structural Integrity	76
	I. HNPF-ROAP Analytical Methods	76
X.	Sodium Service System	82
	A. Oxide Content in Sodium	82
	B. Carbon Content in Sodium	85
XI.	Components Reliability	95
XII.	Fluid Systems Performance Analyses	97
	A. Radioactive Liquid Waste System	97
	B. Radioactive Vent System	99
	C. Nitrogen System	104
	D. Loading Face Shield Cooling System	108
	E. Helium System	110
	F. Instrument and Service Air Systems	114
	G. Heating and Ventilating System	115
	H. Steam and Feedwater Systems	122
	I. Cooling Water Systems	123
XIII.	Instrument and Electrical Systems Performance Analyses	125
	A. Plant Control System	125
	B. Plant Protective System	126
	C. Nuclear Instruments	127
	D. Radiation Detection and Monitoring System	129
	E. Sodium Level Instrumentation	130

CONTENTS

Page

F. Sodium Pressure Instruments 130

G. Sodium Flow Instruments 131

H. Temperature Instruments 132

I. Sodium Leak Detectors 133

J. Moisture Detectors 134

K. Fire Detection System 134

L. Annunciator System 135

M. Electrical Systems – Standard, Critical, and Emergency Power 136

XIV. Performance of Other Process Systems and Mechanical Components 141

A. Maintenance Cell 141

B. Cleaning Cells 145

C. Fuel Handling Machine 146

TABLES

I. Rod Gang and Individual Rod Reactivity Worths 43

II. Tentative Withdrawal Schedule for HNPF Fuel Examination Program 55

III. HNPF Power Coefficients 60

IV. Plugging Temperature History 84

V. Data from Cold Trapping Runs 85

VI. Summary of Sodium Sample Analyses 93

VII. Chemical and Metallurgical Examination of Sample 12 Tabs 94

VIII. Summary of Cover Gas Sample Analyses 94

FIGURES

Page

1. Cutaway View of Reactor Structure 20
2. Horizontal Cross-section Through Reactor 21
3. Fuel Element Assembly 23
4. Moderator-Reflector Assembly 24
5. Control Rod 25
6. Relative Poison Reactivity Worth vs HNPF Full Power Years of Operation 45
7. Xenon Analog Circuit for HNPF Reactivity Studies 62
8. Xenon Reactivity vs Time after Scram 63
9. Sodium Heat Transfer Circuit 67
10. Sodium Free Surface Pump 69
11. Intermediate Heat Exchanger 71
12. Steam Generator 74
13. Intermediate Heat Exchanger Flow vs Pressure Drop 79
14. Steam Generator and Superheater Sodium Pressure Drop vs Sodium Flow 79
15. Intermediate Heat Exchanger Overall Heat Transfer Coefficients . . . 80
16. Superheater Heat Transfer Coefficient vs Power 81
17. Evaporator Heat Transfer Coefficient vs Power 81
18. Sodium Service System 83
19. Sodium Sampler 87
20. Carburization of Test Tabs in 1200°F for 100 Hr 89
21. Carburization Potential of Sodium at 1200°F 90
22. Malfunction, Operation, and Removal Report Form 96
23. Radioactive Liquid Waste System 98
24. Radioactive Vent System 100
25. Nitrogen System 105
26. Loading Face Shield Cooling System 109
27. Helium System 111
28. HNPF Electrical System 137
29. Maintenance Cell 142
30. Fuel Handling Machine 147

ABSTRACT

This is the first semiannual progress report for the Hallam Nuclear Power Facility - Reactor Operations Analysis Program (HNPF-ROAP), and covers the period of September 1962 through February 1963.

The HNPF has operated to 15% full power (38 Mwt), and performs satisfactorily in every respect. The power level will be increased to full power according to a detailed testing program. During this testing period, operations evaluation is accomplished by site personnel as a part of the startup and testing activities; ROAP personnel will utilize this time mainly to develop analytical methods to be used for subsequent operations analysis. When startup testing has been completed, ROAP personnel will analyze operating data and act in a technical consulting capacity to the AEC Chicago Operations Office.

Analysis by ROAP methods of certain operating data has already begun, and will continue. Such data are accumulated daily by the HNPF-ROAP site representative and transmitted to Canoga Park. The detailed analytical methods being developed will facilitate the systematic performing of all routine operations analyses of the HNPF subsequent to startup testing.

In the Reactivity History Program, for example, output data from the reactor will be used as input to a digital computer which will calculate various quantities including predicted and measured reactivity. The difference between the measured reactivity, which is a function of control rod position, and predicted reactivity will be used on a continuing basis to analyze core normalcy.

Also, records will be maintained on individual control rod exposure, calculated and measured rod burnup, at-power calibrations, and rod performance.

A fuel management program will be maintained, including fuel burnup records and fuel destructive examination analyses. The chief object of this portion of ROAP is to achieve the highest fuel exposure consistent with economical, safe, and practical plant operation.

Axial and radial flux distributions and other core conditions will be analyzed by comparing in-core temperatures during normal plant operation with initial temperatures taken under known core conditions.

Performance of the main heat transfer system and its components will be analyzed as a function of time. In analyzing the sodium service system, records will be maintained and evaluated on sodium purity and components performance.

A components reliability program will be maintained consisting mainly of equipment history records. From this information, detailed reliability studies and miscellaneous performance analyses will be made.

I. INTRODUCTION TO THE HALLAM NUCLEAR POWER FACILITY – REACTOR OPERATIONS ANALYSIS PROGRAM

A. PREFACE

About one year ago, planning was initiated on the Hallam Nuclear Power Facility-Reactor Operations Analysis Program (HNPF-ROAP). The program supports a small group of personnel acting in a technical consulting capacity to the Atomic Energy Commission on the operation of the HNPF. Following the rise-to-power testing program, these personnel will maintain cognizance of plant operating history, and stand ready to make any technical analysis requested by the Commission. Also, on a continuing basis, they will analyze operating data and keep the Commission informed on results of analyses by making monthly, semiannual, and topical reports. The system of reporting started September 1, 1962; monthly progress reports for September and each succeeding month have been delivered to the AEC. This text is the first semiannual progress report, covering the period from September 1, 1962 to March 1, 1963.

Progress to date has been mainly in the development of methods for analyzing plant performance from operating data subsequent to the rise-to-power testing program. An analytical method is being developed for each work task (Section I. C. below). For certain tasks, methods have been developed. For others, methods are being worked out, and for still others, the work has not been started. Therefore, the detail presented in each section of this report depends upon the progress made in development of methods for analyzing the associated work tasks.

B. PROGRAM OBJECTIVES

The purpose of the HNPF-ROAP is to support the primary HNPF objective of safe and efficient operation while demonstrating a high plant availability factor and lowering the power generation costs. The program provides technical analyses of operating data. From these analyses, technical reports are prepared, recommendations made, and technical consultant services provided to the Atomic Energy Commission.

Specific objectives established at the beginning of the program follow.

1. Technical Specifications and Operating Authorization

Prepare and submit to the Commission: (a) recommended revisions to the technical specifications; (b) recommendations based on the results of

analyses of anomalies in plant performance; and (c) recommendations as to the advisability of, or necessity for, requesting amendments to, or revisions of, the operating authorization.

2. Reports

Prepare and deliver to the Commission reports in such form and in such number of copies as the Contracting Officer may direct, of program analyses and activities.

3. Fuel Management

Make recommendations concerning the fuel management program, such as: (a) the purchase of fuel spares, fuel spikes, or improved fuel assemblies for partial or complete replacement cores; (b) the proper fuel-loading increments and core positions for new and exposed fuel elements so as to provide the most efficient fuel management scheme; and (c) a fuel examination program, separately funded, which will perform pre- and postirradiation examinations of selected fuel elements.

4. Operating-Design Conformity

On a continuing basis, determine the degree of conformity of operating parameters and safety factors to the design parameters and safety factors.

5. Operating Trends

On a continuing basis, project changes in operating parameters and safety factors as a function of operating time; predict the effect of such changes on plant operation.

6. Testimony Preparation

As requested by the Commission, prepare testimony and appear as expert witnesses before safety review, regulatory, and licensing agencies.

7. Additional Equipment and Services

Recommend procurement of equipment, laboratory analyses, services, and other items which will further the purpose of the program.

8. Procedures and Specifications

As requested by the Commission, prepare procedures, specifications, or other details in connection with the procurement of equipment laboratory analyses, services, and other items referred to in 7. above.

9. Safeguards Reports

As requested by the Commission, review and comment on safeguards reports or supplements prepared by others than Atomics International.

10. Program Limitations

Except as involving consultations already referred to, the program specifically does not include the following duties: (a) inspections, (b) examinations, (c) laboratory analyses, (d) purchase of equipment*, (e) collection of data, (f) fuel accountability, (g) analyses of personnel health physics information, (h) participation on review boards, (i) determination of compliance with plant, equipment, or fuel guarantees, (j) fuel examinations, and (k) recommendations for using the reactor plant for R & D or testing purposes not required to meet plant objectives.

C. WORK TASKS

Twelve work tasks necessary to meet the above program objectives are listed below. These tasks are intended to cover the routine operations analyses; other work is accomplished as requested by the Commission, or as appropriately befits the plant operating circumstances. A major effort in FY 1963 is the development of analytical methods to be used subsequently in performing these tasks. It is possible to define certain tasks, those in which the methods for analyses have been developed, while others remain somewhat general. These latter tasks pertain primarily to the electrical and instrument systems, mechanical components, and all fluid systems except the main heat transfer and sodium service systems; the effort required for these tasks, after methods for performance analyses have been developed, is expected to be minimal. In many instances the only analyses required may be components reliability records.

As the work associated with development of these analytical methods progresses, it will be possible to more clearly isolate and describe each task.

1. Report Preparation (Monthly, Semiannual, Special)

Independent of the HNPF-ROAP, the operating contractor submits to the Commission daily and monthly reports, with copies to the HNPF-ROAP, which

*An exception was made in FY 1962, when certain equipment was procured with HNPF-ROAP funds.

afford a detailed summary of plant operation. From the information contained in these operating reports, and from additional information transmitted by the HNPF-ROAP site representative, complete operations analyses are made. From these analyses, monthly and semiannual progress reports are prepared; special topical reports are prepared as requested by the Commission, or as otherwise seems appropriate.

2. Long Term Reactivity History Studies

3. Control Rod Worth, Performance, and Burnup Analyses

4. Fuel Management Studies

This task includes: (a) records of individual fuel element exposure and burnup; (b) recommendations on a fuel examination program; and (c) evaluation of fuel examination results, and recommendations on fuel procurement, loading increments, management schemes.

5. Health Physics Information Analyses

This task includes the special or routine analyses, if any, of: (a) radioactivity releases, (b) adequacy of biological shielding, and (c) radiation levels in limited access areas and radiation detector stations.

6. Other Core Analyses

This collective task, as concerns the reactor core, includes the following activities: (a) analyses of in-core temperatures; (b) analyses of radial and axial temperature traverses and power distribution; (c) core cover gas activity; (d) recommendations as appropriate, for revisions or amendments to the operating authorization and technical specifications; (e) preparation, as requested, of testimonials; (f) review, as requested, of safeguards supplements or reports; (g) recommendations, as necessary, for additional equipment and services; (h) recommendations, as appropriate, for additional testing or changes in existing tests; (i) preparation, as required, of procedures and specifications; (j) analyses of thermal conductivities, time constants, various poison buildups and reactivity coefficients; (k) analyses of trends; and (l) determination on a continuing basis of operating-design conformity.

7. Main Heat Transfer System Analyses

This task includes analyses of: (a) intermediate heat exchangers, (b) steam generators, (c) sodium pumps, (d) sodium valves, and (e) heat transfer characteristics.

8. Sodium Service System Analyses

This task includes analyses of: (a) sodium carbon content, (b) sodium oxide content, (c) cold trap performance, (d) carbon trap performance, (e) plugging meter performance, (f) freeze and vapor trap performance, and (g) electromagnetic pump performance.

9. Components Reliability Records

10. Fluid Systems Analyses

This task includes performance analyses, if any, for the following systems: (a) radioactive liquid waste system, (b) radioactive vent system, (c) nitrogen system, (d) loading face shield cooling system, (e) helium system, (f) instrument and service air systems, (g) heating and ventilating system including filters, (h) steam and feedwater systems, and (i) cooling water system.

11. Instrument and Electrical Systems Analyses

This task includes performance analyses, if any, of the following systems of instrument and electrical equipment: (a) protective system, (b) control system, (c) nuclear instruments, (d) radiation detection and monitoring system, (e) level instruments, (f) pressure instruments, (g) flow instruments, (h) temperature instruments, (i) sodium leak detection system, (j) moisture detection system, (k) fire protection system, (l) annunciator system, (m) electrical switchgear, and (n) critical and emergency power systems.

12. Other Process Systems and Mechanical Components Analyses

This collective task includes, for all nonnuclear areas, the following: (a) recommendations, as appropriate, for revisions or amendments to the operating authorization and technical specifications; (b) preparation, as requested, of testimonials; (c) recommendations, as necessary, for additional equipment and services; (d) recommendations, as appropriate, for additional testing or revisions in existing tests; (e) preparation, as required, of procedures and specifications; (f) determination, on a continuing basis, of operating-design conformity; (g) analyses of trends; (h) review, as requested, of safeguards supplements or reports; and (i) system and component integrity and performance analyses, if any, of: (1) containment cells, (2) maintenance cell, (3) storage and wash cells, (4) portable purge unit, (5) decontamination facilities, (6) fuel handling machine, and (7) control rod structure.

II. REPORT SUMMARY

A. REACTIVITY HISTORY

A detailed history will be maintained on measured and predicted reactivity, with the difference between these two quantities used to evaluate core normalcy. Analytical methods have been developed for a digital computer code. Output data from the reactor will be used as input to the computer, which calculates various quantities including predicted and measured reactivity. The measured reactivity is a function of control rod position. The predicted reactivity is the basic reactivity for "cold" and "clean" conditions, being corrected for changes due to power and temperature effects, fission product poisoning, and fuel burnup. So far, at the HNPF, the predicted reactivity has been periodically calculated by a simplified procedure. This calculation is accomplished each time the reactor is brought to critical, and again when the reactor reaches equilibrium at power. This method will continue to be used at the site until the rise-to-power testing has been completed.

B. CONTROL RODS

The control rods have been tested and proved reliable during the preoperational and postcritical testing periods. Other inspections and tests will be made during the remaining portion of the postcritical (rise-to-power) testing.

ROAP methods have been developed for performance analysis of control rods as a function of operating time. These methods are based on the three major factors which cause variations in the worth of a control rod: nuclear burnup of the rod, changes in other rod positions, and changes in fuel loading and isotopic content. Due to the uncertainties associated with rod worth calculations, and with applying one set of rod calibration curves to a variety of core conditions, future rod worth measurements will be necessary. The routine analyses on control rods, according to these analytical methods, will facilitate keeping records on (1) individual rod exposure and calculated rod burnup, (2) measured rod burnup, (3) at-power calibration curves, and (4) rod performance data such as drop times and physical dimensions.

C. FUEL MANAGEMENT

The initial fuel management program is being developed under other HNPF engineering projects. This initial program covers the first five calendar years of

reactor operation, and is based on present estimates of reactor operating conditions and costs. Throughout reactor operation this program will be reviewed for applicability to changing operating costs and fuel exposure capabilities.

Fuel burnup records will be maintained, and recommendations will be made to control operation, to achieve the highest fuel exposure consistent with economical, safe, and practical plant operation.

The primary factor contributing to fuel rod failures is expected to be fuel swelling due to radiation. A fuel examination program has been initiated, the objective of which is to establish the allowable exposure of the fuel. To accomplish this, fuel slugs from specified fuel rods are measured before rod fabrication. After predetermined exposures, the same rods will be removed from the respective bundles and examined for changes in properties as a function of exposure.

Fuel loading and shuffling recommendations will be made so that a low overall peak-to-average heat generation rate can be attained. This will result in lower peak temperatures, more uniform exposure, and thus, at time of discharge, a higher average exposure per element for a given peak exposure limit.

A fuel rod shipping cask is being designed for use in conjunction with the fuel examination program. The cask will be used to transport selected fuel rods from the site to the Components Development Hot Cell (CDHC) at AI for destructive examinations. The cask system consists of a fuel canister, cask body, bottom head, top head, cradle and handling gear, cradle casters, and slings. Total cask weight is estimated to be 46,000 lb or 55,000 lb including the cradle.

D. OTHER CORE ANALYSES

Analytical methods are presently being developed for a number of core analyses as listed under Section I. C. 6. In line with these analyses, a program has been developed for more effective use at the site of the analog computer, especially during the postcritical testing program. In general, this involves using the computer to simulate reactor transient behavior, varying certain parameters until the computer output matches the action of the reactor. The values of the parameters necessary to match the computer output to the action of the reactor under these simulated transient conditions are more accurate than the corresponding calculated parameters. These "measured" parameters are then used by the ROAP to decrease uncertainties in the equations and digital computer codes for reactivity history studies.

For in-core temperature analyses, thermocouples are installed in the reactor to provide normal operating information, temperatures of pre-selected core elements, and temperatures within the reactor structure. During normal operation, this temperature information will be compared with the initial temperatures taken during postcritical testing under known core conditions. During the rise-to-power testing, ROAP personnel will ascertain that adequate in-core temperature data are obtained to facilitate subsequent comparisons with in-core temperatures during normal operation. These comparisons will facilitate the calculating of axial and radial flux distributions and making certain other core normalcy studies.

The instrumented moderator element internal pressure, as well as temperature, is monitored; the history of this pressure during initial operation is expected to provide information on graphite outgassing and the gas absorption rate and/or efficiency of the getter.

E. MAIN HEAT TRANSFER SYSTEM

During preoperational and postcritical testing to date, a number of system and component deficiencies have been uncovered. These deficiencies, along with brief descriptions of the necessary corrective modifications, will be discussed later (Section IX). During the rise-to-power testing, initial information will be obtained for subsequent comparisons to operating data. Meanwhile, ROAP will develop methods for analysis. For example, performance analyses of the main heat transfer system will be made as a function of operating time. These analyses will determine short and long term heat transfer characteristics of the intermediate heat exchangers (IHX's) and steam generators. Control graphs will be maintained on IHX heat transfer coefficients and shell and tubeside pressure drops of the evaporators and superheaters; records will be maintained on moisture and solid carryover from the evaporators.

Free surface sodium pump performance data will be evaluated and compared to initial pump characteristics. Control graphs will be maintained for each pump on pump speed, power input, sodium flow, and ΔP. Retesting will be performed if necessary.

Performance analyses of other main heat transfer components will consist mainly of component reliability studies.

System heat balances will be made periodically. Plots will be maintained on gross and net power output, sodium levels, and sodium temperatures and flows.

F. SODIUM SERVICE SYSTEM

To date, the sodium service system has performed satisfactorily. It has been necessary to replace a number of cold traps (Section X), because of greater than anticipated oxide contents in the sodium. The exact methods to be used by ROAP for performance analyses of the sodium service system, except for carbon content analyses, have yet to be developed. It can be said, however, that control graphs will be maintained on cold trap capacity and on the oxide content in sodium. Performance analyses will also be made from operating history and reliability records which are maintained on the major components in the sodium service system.

A program has been initiated as a part of ROAP for determining, on a continuing basis, the carburization potential of the primary sodium. The main purpose of the program is to maintain carbon content and carburization potential in primary sodium at a sufficiently low level to ensure that the stainless steel moderator element sheaths and fuel cladding is not carburized above 0.5 wt % surface carbon.

Sodium samples are periodically taken from the reactor core and carbon trap. Stainless steel tabs are an integral part of the carbon trap sodium samplers. Metallurgical examinations made on these stainless steel tabs include those for case depth, hardness traverses, and chemical analyses. The same type of examinations is performed on tabs "cooked" in sodium from the sample; and chemical analyses are made of the sodium. The carbon trap is operated as necessary to maintain primary sodium carburization potential below 0.5 wt % surface carbon.

G. COMPONENTS RELIABILITY

The components reliability program consists mainly of maintaining an equipment history file. When maintenance is performed, the information will be transcribed to an equipment history sheet corresponding to that particular component. This information will be available for detailed reviews concerning

reliability of specific components. Also, when a component failure causes a decrease in power production, or could potentially have caused such a decrease, a "Malfunction, Operation and Removal Report" will be filled out and filed. From an accumulation of such completed forms, reliability statistics may be obtained.

III. DESCRIPTION OF REACTOR CORE

A. GENERAL

The HNPF reactor core, (Figures 1 and 2) consists of a moderator element matrix into which fuel elements, control rods, and other miscellaneous elements are suspended. The moderator assembly is in the form of a right circular cylinder, 17 ft in diameter by 17 ft high. The initial active core is cylindrical, 13.25 ft high and 13 ft in diameter surrounded by a graphite reflector ranging from 1-3/4 ft to 2 ft thick. The initial fuel is U - 10 wt % Mo alloy. One of the 140 elements has an enrichment of 3.45 wt % U^{235}. All the others have enrichments of 3.6 wt % U^{235}. This provides an excess reactivity of 6.9% in the hot, clean, 140-element core.

Primary sodium inlet pipes (see Figure 1) enter the reactor cavity just above the tops of the moderator assembly, and run downward to the lower part of the reactor vessel. The major portion of sodium enters the lower plenum between the grid plate and the bottom of the reactor vessel and flows upward through the fuel element process tubes to the sodium pool above the core. This fluid removes the heat from the fuel elements. A small portion of the sodium is routed by a parallel piping system to the plenum between the grid plate and the moderator elements. From here it flows upward through the gaps between the moderator elements into the upper sodium pool. This removes the heat generated in the moderator.

Within the reactor cavity, the sodium piping is double-walled. The outer guard pipes extend from the reactor vessel to include the blocking valves just outside of the reactor cavity. At their lower ends, the guard pipes open into the reactor outer vessel. Any leaks of liquid sodium, interior to the blocking valves, will be drained to this outer vessel. Leak detectors and pumpout lines are provided. The outer vessel is sized so that a major sodium leak will not allow the sodium levels to drop below the reactor outlet nozzles.

There are no openings into the reactor cavity below the upper surface of the core. The cavity is sized so that, in the event of a major disaster which dumps the primary system sodium (including standby inventory) into the cavity, the active core will remain flooded.

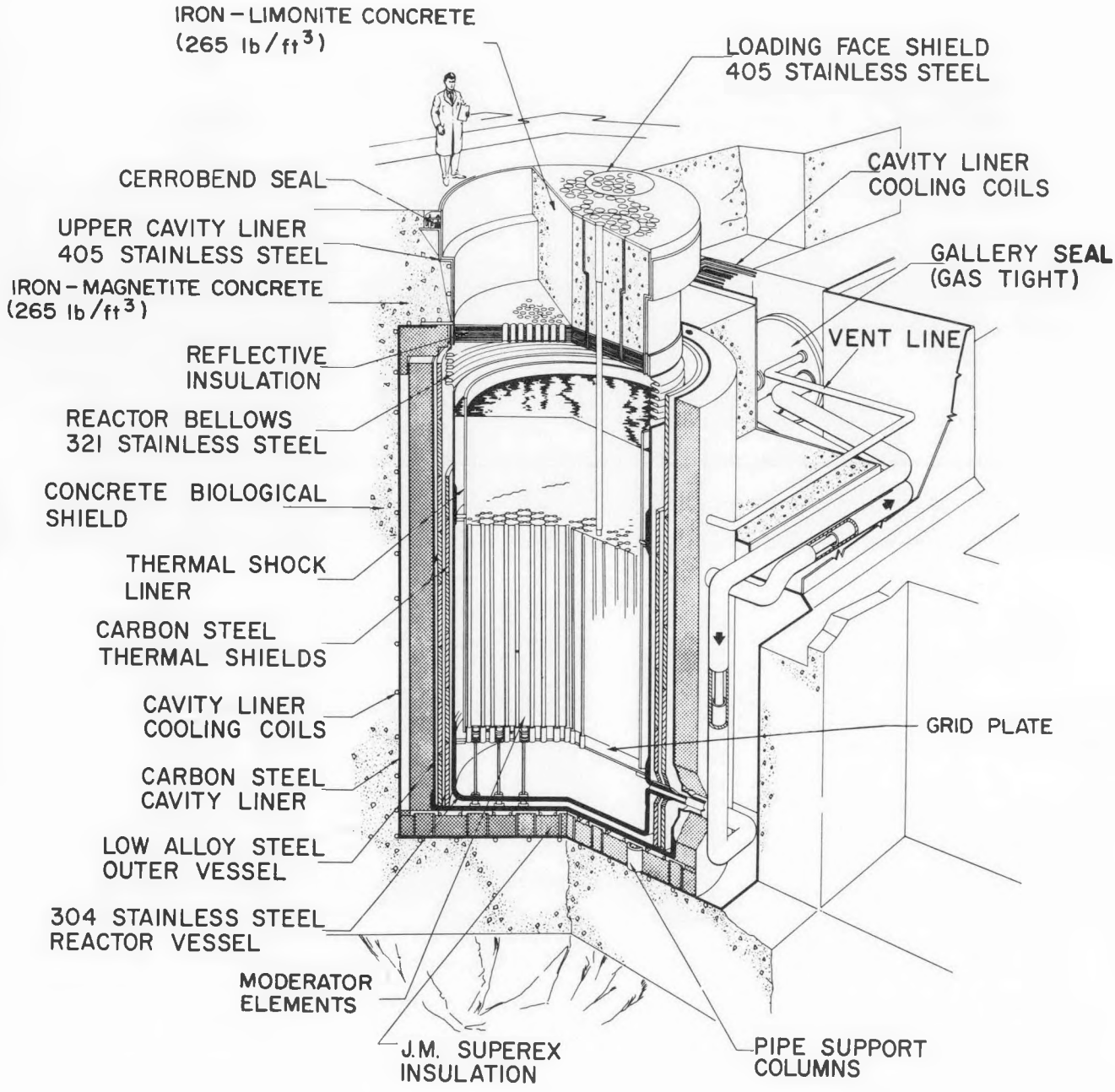

Figure 1. Cutaway View of Reactor Structure

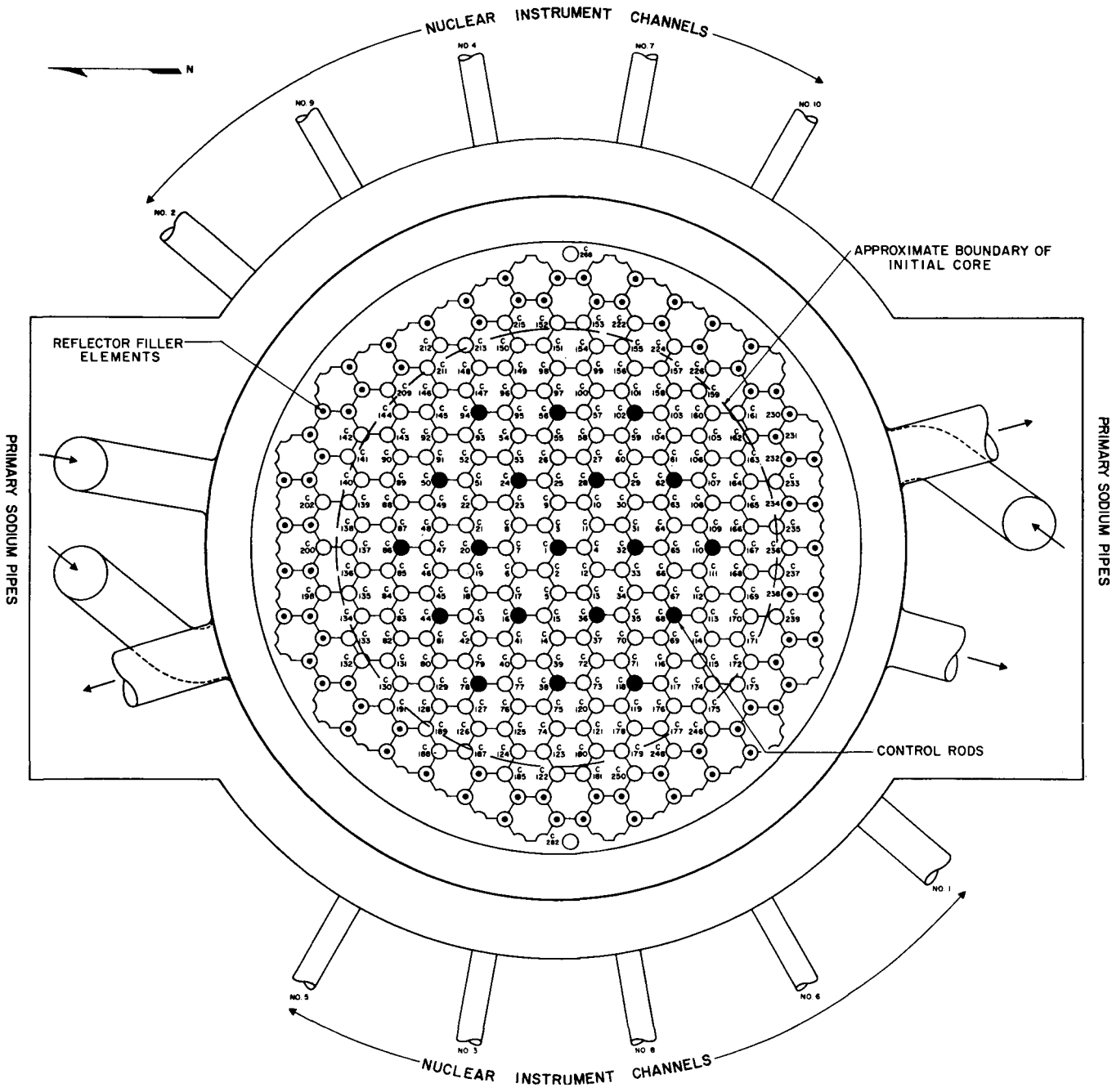

Figure 2. Horizontal Cross-section Through Reactor

B. FUEL ELEMENTS (Figure 3)

The fuel in the reactor is contained in 18 rod fuel bundles. Each bundle consist of an outer ring of 12 rods and an inner ring of 6 rods, enclosed in a Zircaloy 2 process tube. The process tube confines the main coolant flow to the fuel bundle. It seals the element to a nozzle in the lower grid plate by means of piston rings carried on a lower extension of the process tube. Each fuel element and process tube is supported by a perforated hanger tube which, in turn, is suspended from a shield plug in the loading face shield.

C. MODERATOR ELEMENTS (Figure 4)

Each moderator element consists of a log of graphite enclosed in a stainless steel can. The graphite is a prism of hexagonal cross-section measuring 16 in. across flats with a longitudinal scallop on each edge. A total of 141 elements makes up the core and reflector graphite assembly.

The edge scallops form circular process channels with the moderator elements assembled in the core. There are 205 holes in the grid plate which are aligned with these channels to form core positions for fuel elements control rods, and other miscellaneous core elements. The two outmost rings of channels (see Figure 2) are considered part of the reflector, and as such contain reflector filler elements to eliminate columns of sodium and add graphite to the reflector. A reflector-filler element is a cylindrical log of mold-grade graphite canned with stainless steel.

Moderator elements are positioned and supported at the bottom by individual pedestals on the grid plate. The weight of each element is sufficient to hold it on the pedestal. Core clamps surrounding the moderator matrix support the moderator element top heads to prevent lateral movement.

D. CONTROL RODS (Figure 5)

The 19 control rods are combination shim-safety-regulating rods. The poison column and pull rods of each unit are contained in a long, vertical, Zircaloy 2 thimble extending from the loading face to the grid plate. The thimble is pressurized with helium to provide a noncorrosive atmosphere for the control rod components, and to prevent entry of sodium by core cover gas into the thimble in the event of a small leak. Control rod positions in the core are shown in Figure 2.

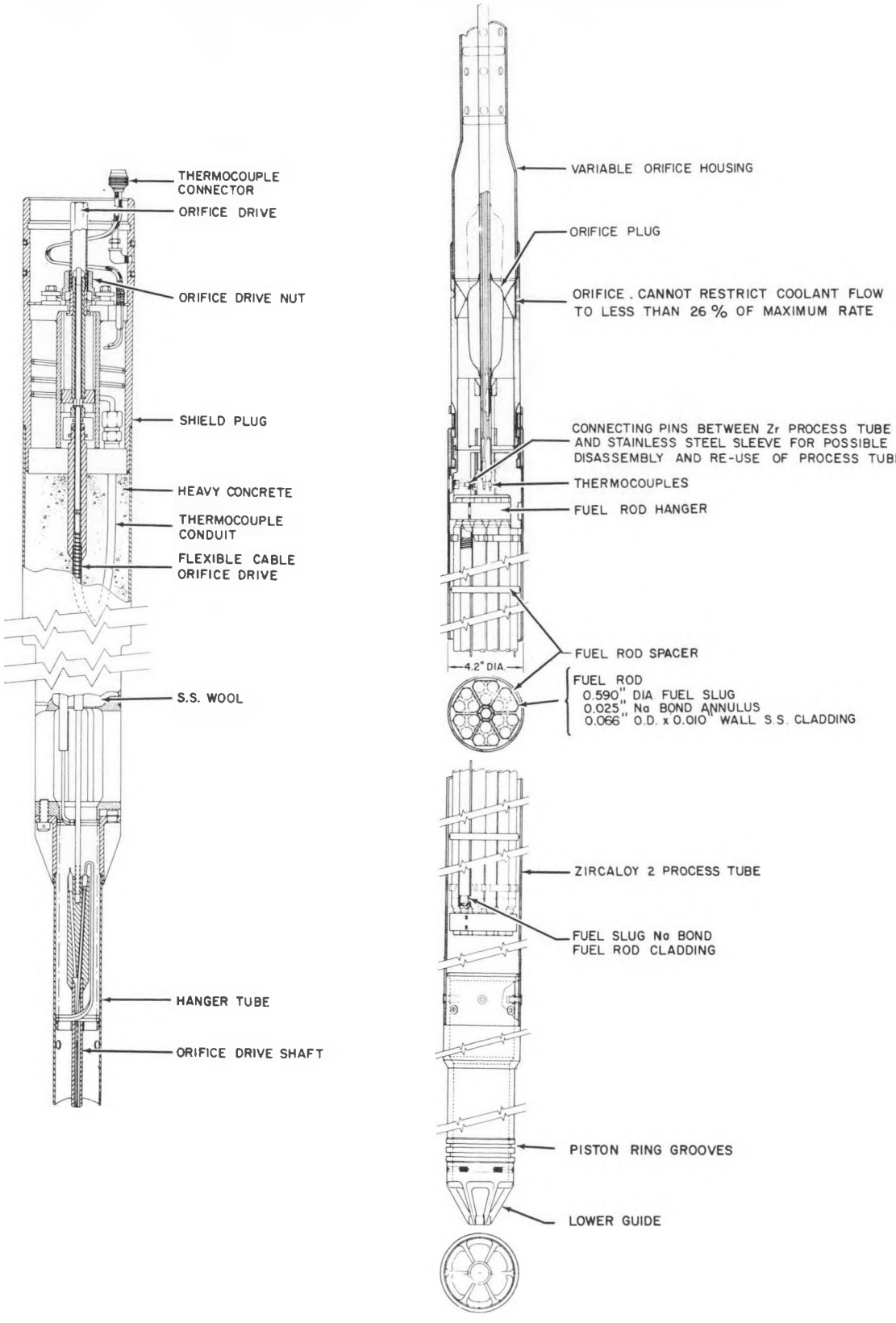

Figure 3. Fuel Element Assembly

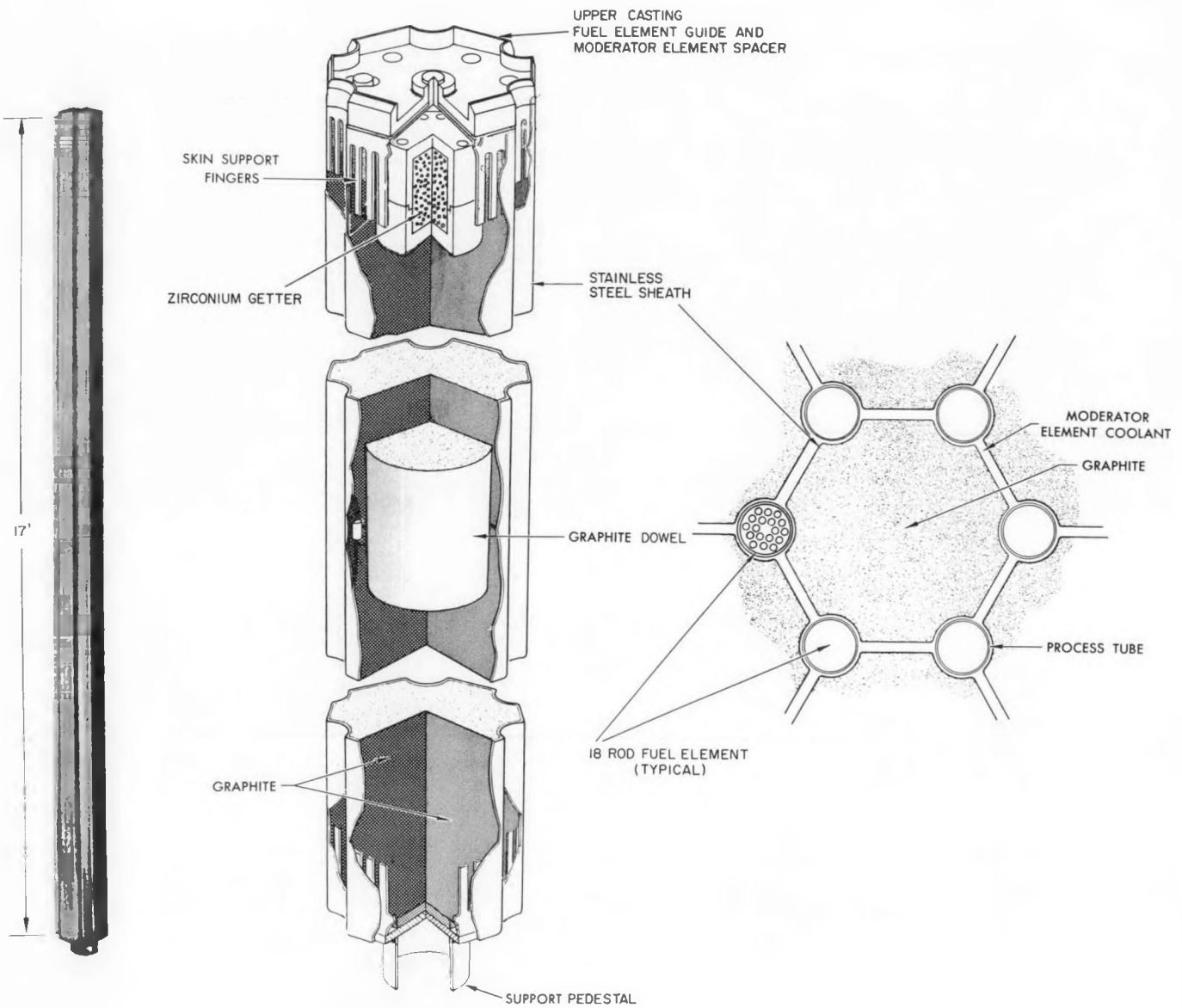

Figure 4. Moderator-reflector Element

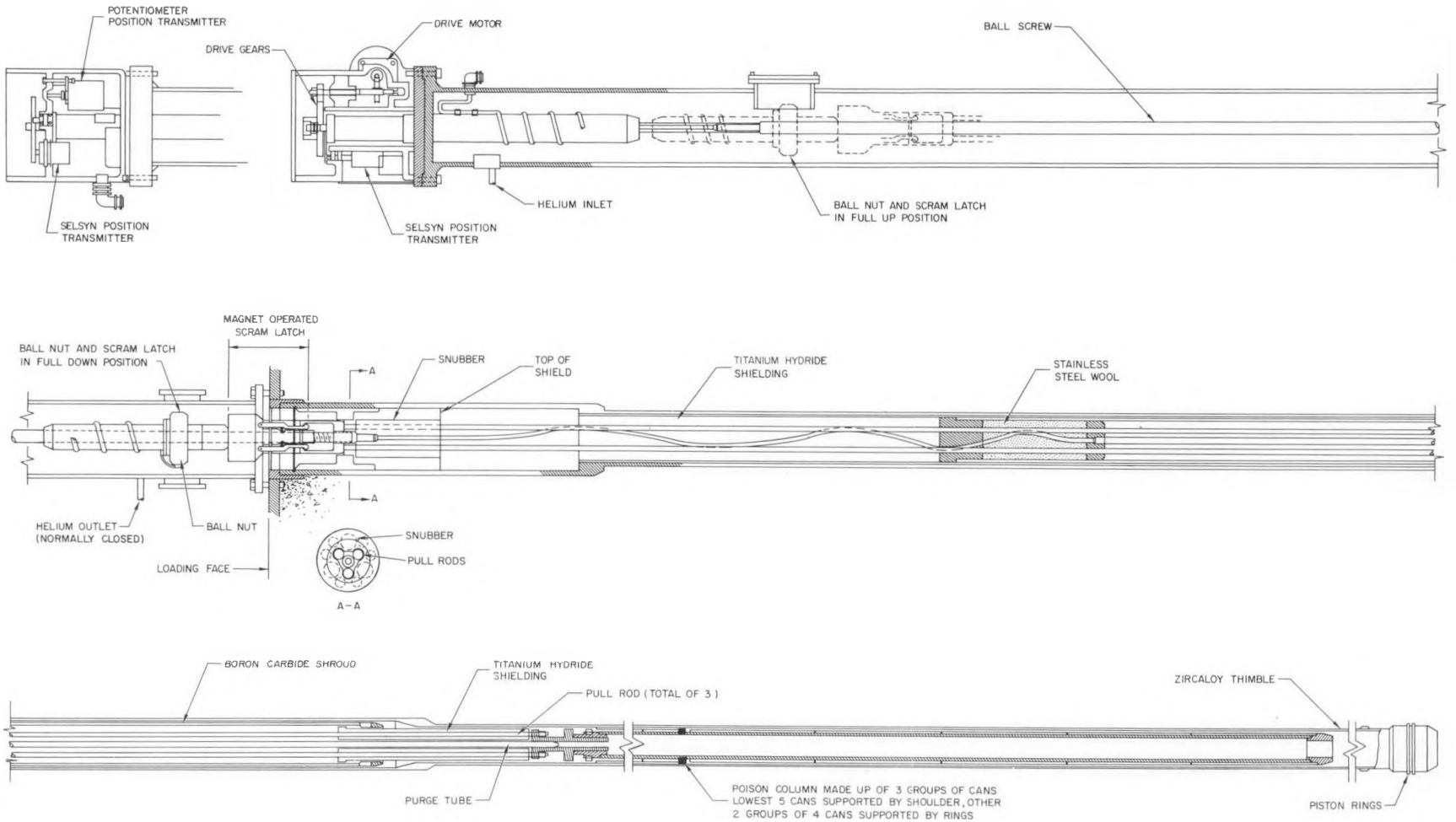

Figure 5. Control Rod

The poison column consists of 13 hollow poison cans suspended on a retainer tube. Each can is approximately 1 ft long and contains a 1/8-in.-thick annulus of gadolinium and samarium oxides as poison, completely clad in Hastelloy X. The retainer tube is connected to three pullrods which in turn are connected to the latching assembly by mechanical latches. During normal operation, the latches are kept engaged by an energized magnet. When the magnets are deenergized the latch mechanism releases and the rods fall into the core to scram the reactor. When a poison column falls into the core, the impact is absorbed by three snubbers located in the loading face shield.

A neutron-absorbing boron carbide shroud is provided around the pullrods in the region between the loading face shield and the top of the moderator cans. This minimizes activation of the pullrods so that, when they are pulled above the loading face, no radiation hazard exists.

E. MISCELLANEOUS CORE ELEMENTS

1. Dummy Elements

Dummy elements are provided to fill process channels that do not contain fuel elements. These elements consist of cylindrical graphite logs, encased in a stainless steel jacket which is attached to a shield plug by a hanger tube.

2. Neutron Source

The source element is used to provide sufficient neutrons to activate the startup nuclear instruments prior to start up. It consists of two parts, a beryllium cylinder enclosed in, and supported by a Zircaloy 2 thimble, and a capsule containing antimony tetraoxide which is supported by a small shield plug and hanger tube and centered in the beryllium cylinder. The space in the Zircaloy 2 thimble not occupied by the beryllium cylinder is filled with graphite. The antimony capsule hanger tube is perforated to reduce the amount of stainless steel poison in the core, and is filled with graphite blocks. The source element is instrumented with thermocouples so that it can be used to measure moderator coolant temperatures in the center of the core. This element fills process channel C-4 (Figure 2) and the thimble bottom plugs the corresponding grid plate hole.

3. Sodium Level Instruments

Reactor positions C-268 and C-282, at opposite sides of the core tank (Figure 2) contain four thimbles each for sodium level gages or other instruments. These gas tight thimbles are attached to epoxy filled shield plugs, each of which can be removed from the reactor separately. The four small plugs fit into a larger, epoxy-resin filled plug in the loading face shield.

4. Sodium Temperature Elements

Three sodium temperature elements are located in process channels at the edge of the core (positions C-188, C-212, and C-236 of Figure 2). Each contains an array of thermocouples to detect moderator coolant temperature profiles. Each element consists of graphite logs encased in a stainless-steel jacket.

F. REACTOR VESSEL STRUCTURE

The reactor core assembly is contained in a Type 304 stainless steel reactor vessel of welded construction. The vessel is 2 in. thick at the base, the lower sides, and at a section near the top of the core. A section above the lower 2-in. course is 3/4 in. thick, and the section above the upper 2-in. course is 1 in. thick. In the lower 2-in.-thick section, the sodium inlet pipes enter the reactor vessel. In the 2-in.-thick section near the top of the core assembly, which extends for about 4-1/2 ft, the sodium outlet pipes are connected to the reactor vessel. There are three main sodium inlet nozzles which connect to the 14-in.-OD cold-leg piping of the primary sodium loops. Two of these nozzles are located on one side of the vessel and one on the other (Figure 2.2), about 28 in. above the vessel base. The moderator coolant inlet nozzle enters the reactor vessel about 4-1/2 ft above the vessel base, and connects the 6-in.-OD inlet pipe to the plenum between the grid plate and the bottom of the moderator elements. The sodium outlet nozzles leave the reactor vessel, two on one side and one on the other (in reverse order to main inlet nozzles), at about 23 ft above the vessel base. These nozzles lead into the 16-in.-OD pipes which carry the hot sodium to the primary sodium pumps. All of the sodium nozzles are welded to the reactor vessel. At the top, a stainless-steel bellows assembly seals the reactor vessel to the upper cavity liner to prevent sodium vapors and the helium atmosphere from escaping, and at the same time allows for thermal expansion and contraction of the reactor vessel. At installation, the bellows is

cold-sprung so as to lower the operating stresses. The bellows is designed for a 5-psig differential pressure at operating temperatures.

The reactor vessel contains the core, a bottom grid plate, and upper, lower, and inlet-plenum thermal shock liners. The grid plate, on which the moderator elements are supported and positioned, is a stainless-steel disc approximately 18 ft in diameter and 1 in. thick. It is supported by a ring which is welded around the inside of the reactor vessel, and also by pedestals located under each moderator can, and is located 42 in. above the bottom of the reactor vessel. The 205 holes in the grid plate connect the core process channels with the sodium inlet plenum below the grid plate.

Upper and lower thermal shock liners are cylindrical shells supported by the core-clamp support ring which is welded around the inside of the reactor vessel approximately 22 ft above the base of the vessel. The upper shock liner is 18.3 ft in diameter and 11 ft high. The lower shock liner is 18.2 ft in diameter and 17 ft high. The inlet sodium nozzles have shock liners extending from the inlet pipe to a point beyond the welded joints between the nozzles and the vessel. Each of the thermal shock liners is fabricated from Type 304 stainless steel, 1/4 in. thick. The gap between the shock liners and the reactor vessel contains stagnant sodium which acts as a thermal barrier to minimize thermal stresses in the reactor vessel.

The reactor vessel is surrounded by the thermal shield, whose function is to attenuate gamma and neutron radiation and thus prevent the concrete biological shield from overheating. The thermal shield consists of two concentric, carbon-steel cylinders, each 2-3/4 in. thick, separated by a 1/4-in. gap. The inner cylinder is approximately 19.5 ft ID; the outer cylinder is approximately 20 ft ID. Each cylinder is formed by a series of 10 adjacent, vertical, curved plates which rest on the bottom of the reactor outer vessel. The inner shield is approximately 25.5 ft high, and the outer shield is approximately 33-1/3 ft high, extending to the top of the reactor vessel. The plates are held in position by tee sections which are welded to the inside of the outer vessel.

The reactor outer vessel is a carbon-steel tank approximately 20-2/3 ft in diameter and 35.5 ft high. The base is 1-1/2 in. thick, except for a 16-in. annulus at the periphery which is 2 in. thick; the wall thickness is 1/2 in. except for the lower 1 ft, where it is 2 in. thick. The wall is covered on the outside with a 12-in. layer of a fibrous, thermal insulating material.

Outside of the thermal insulation, pipe chases are provided for the sodium piping. Surrounding this space are the cavity liner and the concrete biological shield. The cavity liner is a welded, steel-plate structure which covers the inner surface of the biological shield. The liner, which serves as the inner form for the pouring of the concrete, is fabricated from 1/2-in.-thick carbon-steel plate, except for 1-in.-thick sections which make up the bottom surface, the top closure plate, the pipe chase backs, and the upper 5 ft of the cylindrical section surrounding the reactor.

Cooling coils attached to the outside surface of the cavity liner remove heat that is transferred through the reactor insulation and heat that is generated in the concrete and in the liner by gamma radiation. The coolant is demineralized water, and the system is designed to maintain the temperature in the concrete at 150 °F or less, and the surface temperature of the liner between 120 and 150 °F, under normal operating conditions.

The cavity liner is a gas-tight enclosure which envelops the reactor and the adjoining sodium piping and forms the secondary gas-confinement barrier. Helium lines, vent lines, and the conduit surrounding thermocouple leads, heater leads, etc., are seal-welded to the liner. At the main sodium pipe outlets, diaphragm seals separate the helium atmosphere in the cavity from the nitrogen atmosphere in the outer pipe tunnels. The normal operating pressure within the cavity liner is 0.25 psig. The design pressure for this structure is 2 psig.

The loading face shield is a massive reinforced-concrete structure which fills the opening in the upper cavity liner and is sealed to it by a frozen metal (Cerrobend) seal. The upper cavity liner is in turn connected to the reactor vessel through the reactor vessel bellows. The shield weighs approximately 300 tons and consists of single-stepped plug, 19 ft-2 in. diameter at the top, stepped to 18 ft-6 in. diameter. The overall depth of the plug is 7 ft-3 in. The lower 10-1/2 in. consists of 13 equally spaced stainless-steel sheets with a No. 4 finish on the bottom side to serve as reflective insulation. Above this are the 1-in.-thick bottom plate of ferritic stainless steel welded to the 3/4-in.-thick shell, the 3/8-in.-thick moderator removal plug sleeves, and the 1/8-in.-thick core element sleeves. All welding on the shield which is in contact with reactor atmosphere is penetrant inspected and helium leak checked.

Above the bottom plate is a 1-1/2 -in. layer of poured lead in which the 1-1/2-in.-OD nitrogen cooling coils are embedded. Above the lead is a 5 ft-10-1/2 in. layer of reinforced iron-limonite concrete. The horizontal spacing of the reinforcing steel is approximately 14 in., and each layer is laid in a triangular pattern. The bottom layer of bars is 4-1/2 in. above the lead, and the upper layer 3 in. below the top of the concrete. Between the concrete and top plate is a 2-1/2-in. gap for instrumentation, power, and cooling coil leads to the moderator removal plugs. The top plate is 1-in.-thick ferritic stainless steel. The 2-1/2-in. gap will be filled with lead shot after the instrumentation, power, and cooling coil leads have been placed and checked.

The loading face shield has 207 openings into the reactor, 205 of which are directly above the core process channels. The other two openings accommodate sodium liquid level instruments.

The core element plugs are single-stepped plugs of 6-1/4-in. diameter at the top and 4-3/4-in. diameter below the step. Insulation in the plugs consists of 10-1/2 in. of steel wool contiguous to the reflective insulation of the loading face shield. Above the steel wool is a 1-in.-thick plate covered by 5 ft-10-1/2 in. of steel-shot grout (density 245 lb/ft^3). The top of each plug is 3-1/2 in. below the top of the loading face, and the step is 3 ft from the top of the loading face.

Sleeves which form the openings are 6-1/2 in. diameter at the top surface, stepped down to about 5 in. at the bottom. Each fuel element is suspended from the shield plug above it. In those openings occupied by control rods, the drive mechanisms extend through the top shield into the reactor room. Each shield plug has a double quad-ring seal with a valve located to monitor the gas between the rings. A backup seal is provided which consists of a maintainable O-ring gas seal and a retaining ring to lock the O-ring and shield plug to the top shield.

In addition to the core position holes, the loading face shield has three large circular openings of 58-1/4-in. diameter at the top, stepped down to 56-1/2 in. at the bottom, through which moderator and reflector elements can be removed or maintenance operations performed. By rotating the shield (after having removed all fuel and core elements from the core), any moderator or reflector element is accessible through one of these large openings. However, this operation is not a normal one, and it would require an extensive reactor shutdown.

The moderator removal plugs are 58-1/16-in. diameter and stepped down to 56-3/8 in., 40-1/2 in. below the top of the loading face. The cross section of the plug is identical to that of the loading face shield, except that the cooling coils are 3/4 in. OD and the shell is 3/8 in.

IV. REACTIVITY HISTORY

A. SUMMARY

The principal requirement of the reactivity history program is to predict the reactivity of the HNPF reactor and compare it with the reactivity already measured by control rod gang positions and worths. The difference between measured reactivity and predicted reactivity, plotted on a continuous time basis, will be used to evaluate core behavior and to give indications of any core component failures.

The analytical method used on the Sodium Reactor Experiment (SRE) has been found to give quite reasonable results in predicting the SRE reactivity when compared to the reactivity measured by control rod positions. Therefore, the analytical method used for the HNPF reactivity history in general will follow the one used for the SRE.

At this time the basic analytical methods to be used by ROAP in computing the HNPF reactivity history have been completed. Therefore, these methods are presented in some detail. However, only initial results have been obtained with the digital computer program. Therefore, some refinements to the analytical methods and to some parameters may be required after a portion of the reactivity history is computed.

The HNPF predicted reactivity has been periodically calculated at the site, using a simplified procedure which accounts for the isothermal temperature reactivity change and xenon poisoning in the reactor. This calculation is performed each time the reactor is brought critical, and at times when the reactor reaches thermal equilibrium at power. Comparison of the predicted reactivity with the measured reactivity has not shown any abnormalities. The agreement between predicted and measured reactivities as calculated by this at-site method has been close. This method will continue to be used at the site until the plant is turned over to the operating contractor (CPPD). In the meantime, the HNPF-ROAP will finalize and place into operation the computer technique of following predicted vs measured reactivity as a function of time.

The remainder of this report section, then, is used to describe the analytical method to be used by the HNPF-ROAP.

1. Predicted Reactivity

The predicted reactivity (in cents) is defined as:

$$\rho_p = \rho_b - \rho_{xe} - \rho_{sm} - \rho_{bu} + \rho_{ft} + \rho_{mt} + \rho_{gt} \qquad \ldots(1)$$

where ρ_b = the basic clean core reactivity, at a reference temperature of 536°F (worth of control rods in the core);

ρ_{xe} = the reactivity loss due to xenon poisoning;

ρ_{sm} = the reactivity loss due to samarium poisoning;

ρ_{bu} = the reactivity loss due to the burnup of U^{235}, buildup and depletion of plutonium isotopes, and buildup of stable fission products;

ρ_{ft} = the reactivity change due to change in the average temperature of the fuel and its associated coolant;

ρ_{mt} = the reactivity change due to change in the average temperature of the moderator and its associated coolant; and

ρ_{gt} = the reactivity change due to change in the average temperature of the grid plate (a function of the core coolant inlet temperature).

2. Measured Reactivity

The measured reactivity which is a function of the five control rod gang positions is obtained in the following manner.

The reactivity due to the positions of the gangs (in. of withdrawal from the core) is plotted as a series of five calibration curves. The initial calibration curves are based on differential worth measurements made using the period difference method of rod gang calibration. During these calibrations at zero power, the flux distribution was kept as close as possible to the flux distribution which exists with the gangs in the "normal" operating position. As the flux distribution changes with fuel burnup and poison buildup, and corresponding control rod movement, corrections to the curves or new calibration curves will be required. This is discussed in Section IV of this report.

The measured reactivity is obtained from the calibration curves when the gang positions are known:

$$\rho_m = \sum_{n=1} \rho_n \quad , \qquad \ldots (2)$$

where ρ_n is the reactivity added to the core due to the withdrawal of the nth gang.

3. Reactivity Difference

The final calculation is a comparison (difference) between the measured and predicted reactivities:

$$\rho_m - \rho_p = \rho_{diff} \text{ (cents)} \quad . \qquad \ldots (3)$$

B. PROCEDURE

Each of the reactivity parameters is initially calculated at 2-hr intervals. All of the factors affecting the reactivity, such as sodium flow, sodium temperature difference across the core, and average fuel temperature, are averaged over each 2-hr interval; and are assumed to be constant during the interval. The calculations are performed by a digital computer using a Fortran program.

The input data taken over a few days are compiled and fed into the computer which calculates and prints the following information for each 2-hr interval: (1) xenon reactivity loss, (2) samarium reactivity loss, (3) reactivity changes due to average temperature changes in the core, (4) predicted reactivity, (5) measured reactivity, (6) reactivity difference, (7) reactor thermal power, (8) accumulated core burnup at the end of the run, and (9) final iodine, xenon, promethium, and samarium concentrations.

The reactivity difference is then plotted vs time on a continuing basis. The plot of reactivity difference is examined for unexpected fluctuations from the normal, approximately steady level. Some gradual increase in the reactivity difference is expected due to long-term effects such as control rod burnup and power shape redistribution. However, since these changes should not be rapid, they can be taken into account in evaluating the reactivity difference.

Any changes in the reactivity difference which can not be explained by the above type of phenomenon will be analyzed for the possibility of some core abnormality. The information from the reactivity history studies will be used in

conjunction with other reactor normalcy studies such as reactor cover gas analysis and in-core temperatures to help detect and minimize plant component failures.

C. ANALYTICAL METHOD

1. Parameters Needed for Predicted Reactivity, ρ_p

The following parameters are considered for their effects on the predicted reactivity: (a) base reactivity; (b) xenon poisoning; (c) samarium poisoning; (d) fuel burnup; (e) fuel temperature, moderator temperature, and inlet coolant temperature effects on reactivity; and (f) fuel coolant flow, moderator coolant flow, and core pressure coefficients.

2. Calculation of Predicted Reactivity Parameters

a. Base Reactivity

The base reactivity of the clean core measured at zero power and 536°F, with control rods in the operating configuration, is measured as 983.1 cents. The operating configuration is with gangs 3, 4, and 5 at 12 in., gang 2 out, and gang 1 positioned for criticality (69.45 in. with the clean core).

b. Xenon and Samarium Poisoning

The effect of xenon and samarium poisoning on the reactivity of the reactor is based on the assumption that of the four factors making up the infinite multiplication factor k, only the thermal utilization factor f will change significantly with the addition of poison.

(1) Reactivity

The reactivity decrease caused by the buildup of xenon is:

$$\rho_{xe} = \frac{f\sigma_{xe} X (100)}{\Sigma_a \beta} \quad . \qquad \ldots (4)$$

The reactivity decrease caused by samarium is calculated in the same manner as above, with the microscopic cross section and the concentration of xenon replaced with those for samarium.

In the above equation,

f = thermal utilization factor without poison in the reactor,

σ_{xe} = microscopic absorption cross-section for xenon (cm^2),

Σ_a = macroscopic absorption cross-section of the fuel (cm^{-1}),

$\mathbf{X}$ = xenon concentration (atm/cm^3), and

β = delayed neutron fraction = 0.00693.

The only term in Equation 4 which is considered to vary rapidly with time is the poison concentration, $\mathbf{X}$. The methods used to calculate the concentrations of xenon and samarium are given in paragraphs (2) and (3), below.

(2) Xenon Concentration

To calculate the concentration of xenon in the reactor at any time, the decay chain which includes Xe^{135} is first considered:

$$Te^{135} \xrightarrow{2m} I^{135} \xrightarrow{6.7h} Xe^{135} \xrightarrow{9.2h} Cs^{135} \xrightarrow{2 \times 10^4 y} Ba^{135} \qquad \ldots (5)$$

From the above decay scheme the equation for the rate of change of iodine is

$$\frac{dI}{dt} = -\lambda_I I - \sigma_I \varphi I + \gamma_I \Sigma_f \varphi \qquad \ldots (6)$$

$$\simeq -\lambda_I I + \gamma_I \Sigma_f \varphi \quad , \qquad \ldots (7)$$

where $\sigma_I \varphi I \simeq 0$, since σ_I = 7 barns.

The equation for the rate of change of iodine is required since the concentration of iodine appears in one term of the xenon equation.

The differential equation for the rate of change of xenon concentration is

$$\frac{d\mathbf{X}}{dt} = \lambda_I I + \gamma_{xe} \Sigma_f \varphi - \lambda_{xe} \mathbf{X} - \sigma_{xe} \varphi \mathbf{X} \quad . \qquad \ldots (8)$$

The solution of the above two simultaneous differential equations for the concentration of xenon with respect to time is given by

$$\mathbf{X} = \mathbf{X}_{(o)} e^{-(\lambda_{xe} + \overline{\varphi}\sigma_{xe})t} + \left[\frac{I_{(o)}\lambda_I - \gamma_I \Sigma_f \overline{\varphi}}{\lambda_{xe} + \sigma_{xe}\overline{\varphi} - \lambda_I}\right]$$

$$\cdot \left[e^{-\lambda_I t} - e^{-(\lambda_{xe} + \sigma_{xe}\overline{\varphi})t}\right] + \left[\frac{\gamma_{xe}\Sigma_f\overline{\varphi} + \gamma_I \Sigma_f \overline{\varphi}}{\lambda_{xe} + \sigma_{xe}\overline{\varphi}}\right]\left[1 - e^{-\lambda_{xe}\overline{\varphi} t}\right] \qquad \ldots(9)$$

Equation 9 above is used along with Equation 4 to solve for the reactivity loss of the reactor due to xenon poison.

Definition of symbols:

γ_I = iodine fission yield,

γ_{xe} = xenon fission yield,

λ_I = iodine decay constant,

λ_{xe} = xenon decay constant,

I = iodine concentration at time t (atm/cm^3),

$I_{(o)}$ = iodine concentration at time = 0,

$\mathbf{X}$ = xenon concentration at time t (atm/cm^3),

$\mathbf{X}_{(o)}$ = xenon concentration at time = 0,

Σ_f = fuel macroscopic fission cross section (cm^{-1}),

t = time in sec (2 hr = 7.2×10^3 sec), and

$\overline{\varphi}$ = average thermal neutron flux.

The values for γ_I, γ_{xe}, λ_I, λ_{xe}, and σ_{xe} are taken as known values for the initial program. The values for Σ_f, Σ_a, f, and $\overline{\varphi}$ are theoretically calculated values. The degree of uncertainty in these values is reduced by the xenon poison test of the reactor which determines the best values by means of an analog computer simulation of the actual xenon transient. See Section VII. B, "Analog Computer Program."

(3) Samarium Concentration

The decay chain which includes samarium is

$$Nd^{149} \xrightarrow{1.7h} Pm^{149} \xrightarrow{47h} Sm^{149}\text{(stable)} \quad . \qquad \ldots(10)$$

From the above decay scheme the equations for the rate of change of promethium and samarium are

$$\frac{dPm}{dt} = \gamma_{Pm} \Sigma_f \varphi - \lambda_{Pm} Pm - \overbrace{\sigma_{Pm} \varphi Pm}^{\simeq 0} \qquad \ldots(11)$$

and

$$\frac{dSm}{dt} = \lambda_{Pm} Pm + \gamma_{Sm} \Sigma_f \varphi - \sigma_{Sm} \varphi Sm \quad . \qquad \ldots(12)$$

Equation 11 above for promethium is similar to Equation 10 for iodine.

Equation 12 for the rate of change of concentration of samarium is similar to Equation 8 for xenon rate of change of concentration except for the two following conditions:

a) $\lambda_{Sm} = 0$, since samarium is stable;

b) $\gamma_{Sm} = 0$.

Therefore, the solution of Equations 11 and 12 is similar to that of Equation 9 except that λ_{Sm} and γ_{Sm} are set equal to zero.

The solution of Equations 11 and 12 for the concentration of samarium is given by

$$Sm = \left[Sm(o) + \frac{\gamma_{Pm} \Sigma_f \overline{\varphi} - Pm(o) \lambda_{Pm}}{\sigma_{Sm} \overline{\varphi} - \lambda_{Pm}} - \frac{\gamma_{Pm} \Sigma_f}{\sigma_{Sm}} \right] e^{-\sigma_{Sm} \overline{\varphi} t}$$

$$\cdot \left[\frac{\gamma_{Pm} \Sigma_f \overline{\varphi} - Pm(o) \lambda_{Pm}}{\sigma_{Sm} \overline{\varphi} - \lambda_{Pm}} \right] e^{-\lambda_{Pm} t} + \frac{\gamma_{Pm} \Sigma_f}{\sigma_{Sm}} \quad . \qquad \ldots(13)$$

The definitions of symbols are similar to those for xenon concentration calculations. The reactivity due to samarium poisoning is calculated in the same way as the reactivity due to xenon is calculated, Equation 4.

(4) Average Thermal Neutron Flux

In order to calculate the concentrations of xenon and samarium present in the reactor at any time, it is necessary to know the neutron flux during the period of the time preceding the determination. The average thermal flux in the fuel across the core of the reactor averaged over the preceding 2-hr interval is used. The thermal neutron flux is based on the power developed by the fuel:

$$\overline{\varphi} = \frac{3.10 \times 10^{16} \text{ (fiss/Mw-sec)} \overline{P}}{\Sigma_f V_{fuel}} \qquad \ldots(14)$$

This conversion is based on 200 Mev/fission, where

$\overline{\varphi}$ = average thermal flux (neutrons/cm^2-sec),

$\overline{P}$ = average thermal power from the core for the 2-hr period (Mwt),

Σ_f = macroscopic fission cross section of the fuel (1/cm), and

V_{fuel} = volume of the fuel (cm^3).

(5) Thermal Power

The average thermal power from the core for the 2-hr interval is used to calculate the average thermal flux, Equation 14 above, and to calculate the reactivity loss due to burnup. The thermal power generated by the reactor and removed by the sodium coolant is a function of the sodium flow rate, the change in temperature of the sodium across the core, and the specific heat of the sodium:

$$P = WC_p \Delta T \; 2.93 (10)^{-7} \text{ (Mwt-hr/Btu)}, \qquad \ldots(15)$$

where

W = sodium flow rate (lb/hr),

P = thermal power (Mwt),

C_p = specific heat of sodium (temperature corrected)(Btu/lb-°F),

ΔT = temperature difference across the core (°F),

$$\overline{P} = \frac{P_t + P_o}{2} = \text{average power over interval considered}, \qquad \ldots(16)$$

where

P_o = power at the beginning of the period, and

P_t = power at the end of the period.

(6) Fuel Burnup

The change in reactivity due to burnup is based on core calculations which predict the change in k_{eff} vs Mwd/MTU. The following effects are included: (a) U^{235} depletion, (b) Pu^{239}, Pu^{240}, Pu^{241} buildup and depletion, and (c) accumulation of stable fission product poisons.

$$\Delta\rho_{bu} = \left[\frac{\alpha\,\Delta k/(\text{Mwd/MTU})}{\text{wt(MTU)}}\right]\left(\frac{100}{\beta}\right)\left(\frac{¢}{\Delta k}\right)(t)\,(\text{Mwd})$$

$$= \left(\frac{-1.6 \times 10^{-5}}{0.2016 \times 140}\right)\left(\frac{100}{0.00693}\right)t$$

$$= 0.0082\,t \text{ (cents)}. \qquad \ldots(17)$$

(7) Power-Temperature Effects on Reactivity

As the power and/or the sodium flow in the reactor change, the temperatures in the various components of the core change. These temperature changes affect the reactivity by changing the physical and nuclear parameters of the core. Temperature effects are considered on a steady-state basis using the average temperature of the fuel, coolant, moderator, and grid plate to calculate the respective reactivity effects.

The reactivity temperature coefficients are calculated from data obtained from the power-coefficient testing of the reactor (see Section VII. B, "Analog Computer Program"):

$$\rho_{ft} = \alpha_f\,(T_{fuel} - 536°F), \qquad \ldots(18)$$

$$\rho_{mod} = \alpha_m\,(T_{mod} - 536°F), \qquad \ldots(19)$$

$$\rho_{gt} = \alpha_g\,(T_{grid} - 536°F), \qquad \ldots(20)$$

where α_f, α_m, and α_g are the temperature coefficients for the fuel and associated coolant, the moderator and associated coolant, and the grid plate or core sodium inlet.

T_{fuel}, T_{mod}, and T_{grid} are the average temperatures of the fuel, moderator, and grid plate. All are determined from the sodium inlet and outlet temperatures and the reactor power. These average component temperatures are also averaged over the 2-hr interval.

(8) Flow and Pressure Coefficients

Postcritical tests run to determine the zero power flow and pressure coefficients show that changes in sodium flow rate and core cover gas pressure will have no significant effects on reactivity.

3. Interpretation of the Measured Reactivity, ρ_m

To enable the computer to interpret the measured reactivity when the positions of the control rod gangs are used as input data, the calibration curve for each gang is expressed as a polynomial. This polynomial is obtained by a separate digital computer code which applies a least-squares fit to several points selected from the experimental curve:

$$\rho_n = a_o + a_1 x + a_2 x^2 + a_3 x^3 + a_4 x^4 + a_5 x^5 + a_6 x^6 \quad , \qquad \ldots(21)$$

where

x = amount of gang withdrawal from the core (in.), and

a_n = constant coefficients from least-squares fit of the calibration curve.

4. Routine Operating Information

To compute the reactivity history, the following information is required from the HNPF for each 2-hr of operation.

a) Reactor core sodium inlet temperature, °F.

b) Reactor core sodium outlet temperature, °F.

c) Core sodium flow rate, % of full flow (full flow = 8.4×10^6 lb/hr including main flow and moderator flow).

d) Moderator sodium flow rate.

e) Position of control rod gangs 1, 2, 3, 4, and 5 in.

V. CONTROL RODS

A. SUMMARY OF CONTROL ROD TESTING AND OPERATION

A series of tests has been performed to check the operability of the control rods. In general, the control rod components and circuitry perform satisfactorily and give reliable indication of control rod status; the control rod actuator support structure and the drive and actuator assemblies perform in accordance with design requirements and are adequate for plant operation. Specifically, the test program is as follows.

1. Drive and Actuators

This test ensured satisfactory performance of the control rod drive and actuator assemblies. It also verified operability of mechanical and electrical components and position indicator signal devices contained in the drive and actuator assemblies after installation of the control rod support structure on the reactor loading face shield.

2. Rod Components and Circuitry

This test verified that all components of the control rods and the control rod circuitry perform satisfactorily and give reliable indication of control rod status.

3. Final Alignment and Repeatability Tests

This test accomplished final alignment of the control rod actuator support structure and the individual actuator assemblies on the reactor loading face shield The test also verified repeatability of (a) alignment of the support structures and actuators; (b) rod withdrawal and insertion speeds; (c) latch release voltage and current; (d) motor speed, voltages, and currents for driving down and up; (e) scram time from full height; (f) scram time from half height; and (g) rod latch release times.

4. Additional Testing

Additional control rod testing which will have been accomplished prior to completion of the post critical test program includes the following.

a) Measurement of all control rod lengths, and the maximum and minimum diameters of the poison cans of four control rods. These

measurements were taken prior to wet critical; and will be taken again following testing at 15% power.

b) A performance check for the control rod drive actuator, and poison column assemblies after completion of 15% power testing.

c) Control rod reactivity worth.

B. OPERATING CONFIGURATION

The proposed control rod operating configuration is: Gang 1 positioned for criticality; Gang 2 fully withdrawn; and Gangs, 3, 4, and 5 withdrawn 12 in. to clear the snubbers. The gang configurations (see Table I) during the rod calibration test will be maintained as close as possible to the proposed operating configuration. This is to ascertain that the measured rod reactivity worth will be representative of the rod worth in subsequent reactor operation. Preliminary analysis of control rod calibration data gives the rod gang and individual rod reactivity worths listed in Table I. These results indicate that total worth of the 19 control rods is 1807¢ (12.5% Δ k/k). The excess reactivity of the unirradiated Δ core at zero power and 540°F is approximately 986¢ in the operating configuration. Hence, the shutdown margin with all rods inserted is about 821¢.

TABLE I

ROD GANG AND INDIVIDUAL ROD REACTIVITY WORTHS

Gang Number	Radial Distance From Core Center (in.)	Rods per Gang	Rod Gang Integral Worth (¢)	Worth per Rod (¢)
1	55.5	6	434	72
2	48.0	6	527	88
3	27.5	3	372	124
4	27.5	3	381	127
5	0	1	93	93

The control rod performance, as determined by control rod data obtained to date, is in agreement with expected results.[4] Specifically, total rod worth of 12.5% Δk/k compares with a predicted worth of 14% Δk/k; and all rods drop with greater than 0.95 g acceleration until the deceleration of the snubbers becomes effective.

C. HNPF-ROAP METHODS FOR ANALYZING CONTROL RODS

In developing ROAP methods for analyzing control rods, consideration must be given the fact that reactivity worth of a control rod is not a fixed value. Three major factors that cause variations in the worth of a rod are (1) nuclear burnup of the rod, (2) changes in other rod positions, and (3) changes in fuel isotopic content and loading. Variations in the reactor power and temperature may also cause a change in rod worth. For example, the change of xenon poisoning when the reactor power is varied produces a flux shift which could result in a change of rod worth.

Due to the uncertainties associated with rod worth calculations and with applying one set of rod calibration curves to a variety of core conditions, future rod worth measurements will be necessary. The recommended procedure for measuring control rod burnup is briefly described in Section V. C. 2.

Following are brief descriptions of HNPF-ROAP analytical methods for (1) rod burnup, (2) at-power rod worth measurements, and (3) control rod performance.

1. Rod Burnup

The control rod poison column consists of 13 hollow poison cans suspended on a retainer tube. Each can is approximately 1 ft long and contains gadolinium and samarium oxide as poison in a 0.125-in. thick annulus with an outside diameter of approximately 3.25 in. The calculated burnup of a poison can, centrally located in the core, is shown as Curve I of Figure 6. In this burnup calculation, it is assumed that: (a) the neutron absorption rate in the poison can is constant over its lifetime; (b) the thermal worth remains constant until the can blackness begins to decrease; (c) the total worth decreases at a constant rate until the can blackness begins decreasing; (d) the effective radius of the black poison can does not change or thereby influence can worth, since the poison annulus is thin; and (e) the only neutron absorbing isotopes are Sm^{149}, Gd^{155}, and Gd^{157}. (Neglecting other isotopes with relatively small cross sections and neglecting the neutron capture chains results in a calculated rate of decrease in relative strength greather than that expected to occur.)

From the measurements made in the SGR critical assembly, it is known that the thermal worth of the poison is approximately 75% of the total worth. The poison can blackness is calculated to begin decreasing at approximately 3.5 full

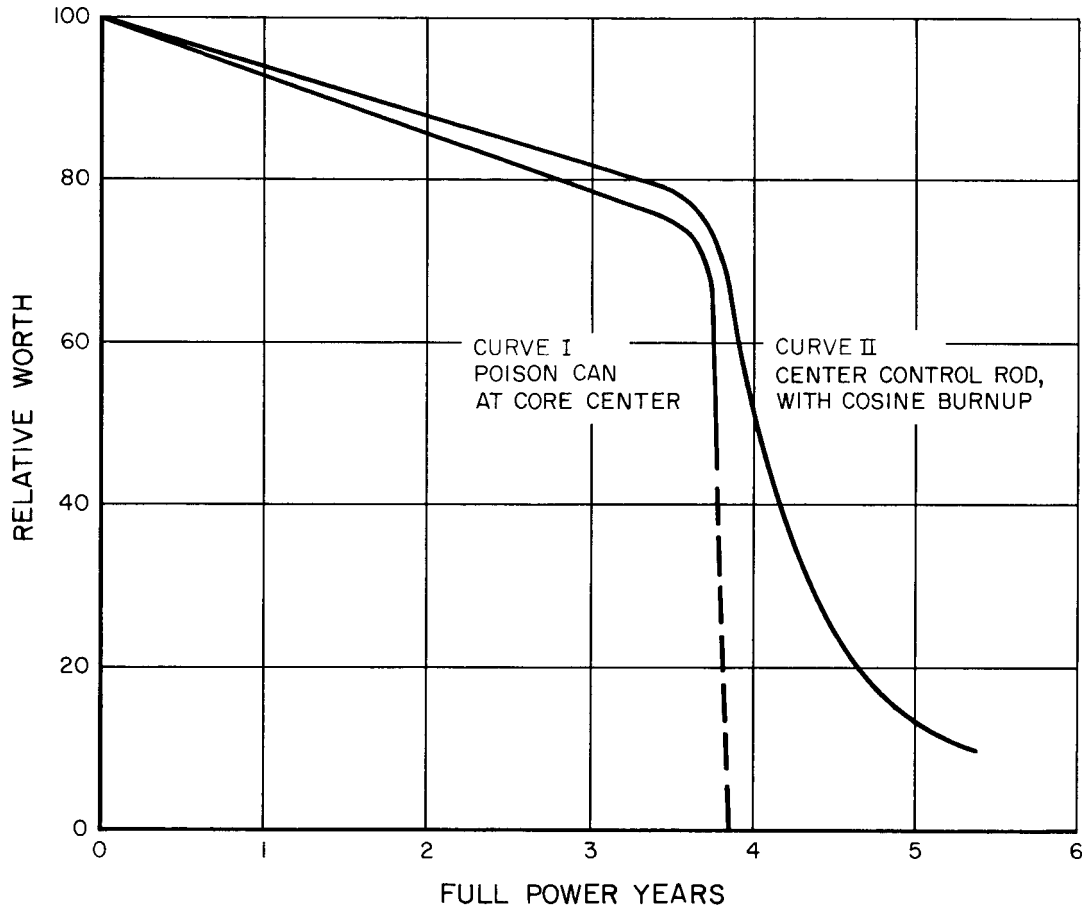

Figure 6. Relative Poison Reactivity Worth vs HNPF Full Power Years of Operation

power years; at this time, only a small fraction of the original poison atoms remains. The poison-can worth subsequently decreases rapidly due to the assumed constant neutron absorption rate.

The calculation of the burnup of a poison can was extended to obtain the burnup of a fully inserted central control rod, assuming an axial cosine flux distribution (and burnup), and a cosine-squared reactivity weighting (see Curve II of Figure 6). The length of each rod is such that only a small fraction of a fully inserted rod will reach the point of rapid decrease in worth at any one time; therefore, the decrease of reactivity worth for an entire control rod is more gradual than it is for a single poison can.

Since Gang 2 rods are fully withdrawn for the initial operating configuration, and there are no plans to use this gang in the core, these rods will not burn up. The burnup rates and patterns for the rods in other gangs will be different

because of the difference in flux distributions, length of rods inserted, and in-core residence times experienced by the rods.

a. Reasons for Rod Burnup Measurements

The rod burnup curves in Figure 6 contain a number of assumptions, and the accuracy of the curves is uncertain. It is intended that a control rod be replaced whenever its integrated worth is less than 75% of an unexposed rod at the same core position. Therefore, substantiation of the calculations by measurements is required unless a large factor of conservatism is applied to the calculations by replacing the rods before significant burnup occurs. Assuming the rod lifetime is limited by nuclear burnup and not mechanical damage, then, for the following reasons, rod burnup measurements are desirable: (1) to take advantage of the maximum useful lifetime of the rods, (2) to provide burnup information for use in reactivity history analysis, and (3) to calculate the change in total rod worth for use in shutdown margin evaluations.

b. Method for Measuring Rod Burnup

To yield useful results, a method for measuring rod burnup should minimize or eliminate the effect of the other factors that result in rod worth changes. The most direct method of measuring rod burnup is by comparison of the rod with a reactivity "standard." These comparison measurements will initially be made about every 12 full-power months. Accurate measurements of the gradual rod burnup do not predict when the thermal neutron blackness begins to decrease. Therefore, as the point of decreasing thermal blackness is approached the frequency of rod worth measurements may be increased. Once the burnup curve is determined, additional measurements for that type of rod may not be necessary since the rod exposure records will be used to calculate the amount of burnup. The continuous reactivity history will also give an indication of abnormal reactivity changes in the core, such as caused by a rapid decrease in rod worth.

Two rods will be chosen for burnup measurements, one rod in each of the two highest exposure gangs. In addition to the instrumented poison column, there are two spare poison columns. These two spare columns may be used as reactivity standards. In this case each will be identified and assigned to one of the two in-core rods to be measured for burnup, and will be used with that particular rod for all future measurements. In the event fixed poison columns are needed for normal operation with a second core fuel, at least one spare column should be retained as a reactivity standard.

The core excess reactivity and temperature should be constant throughout the rod burnup measurements. The measurement of rod burnup will follow the procedure briefly outlined below.

1) Start up the reactor to criticality at zero power with the two irradiated rods to be measured, A and B, fully withdrawn. Adjust the other rods to provide a symmetrical axial flux distribution. Withdraw Gang 1 full out if possible, and insert Gang 2 sufficiently to be used as the compensating gang during the calibration. Record the critical configuration.

2) Fully insert Rod A, obtain criticality by adjusting Gang 2 only, and record the critical configuration. Using Gang 2 as the compensating gang, calibrate Rod A by the differential period technique that was used during the initial HNPF rod calibration. When it is fully withdrawn, record the critical configuration.

3) Repeat Step 2. for Rod B.

4) Exchange rods A and B with the standard rods.

5) Repeat Step (1) for the standard rods. The critical configuration should be the same as that previously obtained. If a slight adjustment is necessary to obtain criticality, adjust Gang 2 only.

6) Repeat Steps (2) and (3) for the two standard rods.

7) Replace the standard rods with rods A and B. The latter must be returned to their original core positions.

2. <u>At Power Rod Worth Measurement</u>

It is expected that the reactor will be operated for long periods of time, and that differential and relative rod worth measurements at power will be used for analysis of reactivity history data. The reactor power level will vary during a 24-hr period; rod worth measurements should be made during lower power operation. To eliminate as many variables as possible, rod worth measurements should be done under conditions of flow, power, and temperature identical with those existing when previous measurements were taken.

The worth of an increment of rod will be determined by having the reactor on manual control, moving the rod a short distance, and then adjusting the rod to return the reactor to the original power. A trace of rod position and flux will be recorded for use in an analog computer analysis. The analog computer will be used to calculate the worth of the rod increment required to give the observed flux trace for known power coefficients of reactivity. After the incremental worth of one rod is determined, the relative rod worth of other rods can be determined by comparing them with the calibrated rod. The at-power worth measurement will initially be performed about every two or more full power weeks, if this method is shown to give useful and repeatable results.

If additional rod worth data are required in the future, the rods would most likely be partially calibrated by the method used to obtain the present calibration curves.

3. Control Rod Performance

At intervals of about a full-power year, poison columns will be inspected on a sampling basis. Measurements will be made of rod diameter, poison column length, and pull rod length, and compared with the original measurement.

Measurements of rod-drop time will be made at each planned major shutdown. Data will be taken of the elapsed time from magnet deenergization to a free fall of 9 ft and the total elapsed time until the full snubbed position is reached. A comparison with the original data will be made and any significant change will be investigated.

VI. FUEL MANAGEMENT

A. INITIAL PROGRAM

The initial fuel management program is being developed under other HNPF engineering projects. The initial program covers the first 5 calendar years of reactor operation, and is based on present estimates of reactor operating conditions and costs. This program is based on the initial U-Mo fuel attaining a peak exposure of 4,000 Mwd/MTU, with uranium carbide as replacement fuel. As reactor operating experience is gained regarding fuel exposure capabilities and costs of operation, it may be advisable to revise the initial fuel management program accordingly. A continuous review of this program will be maintained throughout reactor operation.

B. FUEL MANAGEMENT PHILOSOPHY

A number of assumptions relating to future reactor operations must be made prior to performing fuel management calculations. Each assumption takes into consideration the limitations imposed by the reactor design and by reasonable operating conditions. The ranges of some of the important variables are delineated below.

1. Economics

One of the principle objectives of the fuel management program is to minimize the cost of the electrical power produced by the HNPF. Each decision made regarding the program must consider the economic ramifications involved, and strive to reduce costs. Factors which directly affect economics, such as changes in enriched fuel prices and in fuel fabrication costs, will be incorporated in the program. They will also be analyzed for their influence on other facets of fuel management, such as refueling cycle time and batch sizes.

2. Fuel Burnup

The physical limitation of the initial core U-Mo fuel is presently estimated to be 4,000 Mwd/MTU peak exposure. The replacement UC fuel is designed for a peak exposure of 20,000 Mwd/MTU. Studies to date show that it is economically advantageous to obtain peak fuel exposure greater than these, so operation to achieve the highest fuel exposure consistent with safe and practical plant operation will be recommended. The basic physical limitation of

fuel exposure is expected to be failure or probability of failure of fuel rod cladding. Such failures would release noble gases to the reactor cover gas and other fission products to the primary sodium system, and thus present potential maintenance problems. They could also complicate the handling of spent fuel elements. Although the plant is designed to operate satisfactorily in spite of fuel rod failures, it is desirable to minimize the number of such failures. The primary factor which contributes to fuel rod failure is expected to be fuel swelling due to radiation. Such swelling will displace bond sodium and compress the gas in the expansion space above each fuel rod, thereby increasing fuel rod internal pressure. If local fuel swelling is severe, the fuel may physically rip the cladding and produce a failure at that point. Release of fission gases from the exposed fuel will also contribute to increasing the fuel rod internal pressure. It is felt that the problem of corrosion of fuel rod cladding will be negligible since the oxygen content of primary sodium will be carefully controlled. Also the carbon content of sodium will be maintained below a level which could cause significant carburization of the cladding. Carburization of the internal cladding surface on UC fuel is negligible since hypostoichiometric UC will be used (this fuel contains a small amount of free uranium).

The actual physical limit on fuel burnup will be determined from the fuel examination program, which will make detailed examinations of selected fuel elements from the initial core loading. This program will periodically select elements from the reactor for hot cell examination. To increase the information available from fuel examination it may be desirable to let a few elements remain in the core to exposures considerably above that normally selected as "maximum allowable."

3. Fuel Loading and Shuffling

The physical size of the core limits the maximum number of fuel elements to 182. Fuel temperature limitations set the minimum core size, with present designs, to 140 U-Mo elements or 160 UC elements. The primary advantage of using the large core is that it minimizes thermal stresses on moderator cans and produces lower fuel temperatures. These may result in longer moderator can life and higher allowable fuel burnup, respectively.

Core loading should have, as one of its objectives, a low overall peak-to-average heat generation rate. This will result in lower peak fuel temperatures and in more uniform fuel exposure, and will make it easier to obtain high

average discharge fuel exposure for a given peak discharge exposure. Fresh fuel additions to the core will generally be on the core periphery to aid in achieving a flat power distribution. Spent fuel will be removed from near the core center, and partially exposed fuel will be moved toward the center in an "out $\longrightarrow$ in" shuffling scheme.

A 9-zone refueling scheme has been selected for the steady-state fuel cycle. For the contemplated 171-element UC steady-state core, each batch of fuel will consist of 19 elements. Based on a plant factor of 0.8, refueling will be required about every 7 calendar months. Since each batch will be moved twice after insertion in the core, it should be possible to achieve nearly equal burnup for all elements in a given batch.

4. Refueling Predictions

As reactor operation proceeds, the data obtained experimentally will be used to verify or modify the initial fuel management program. During each operating period a plot of excess reactivity at full power vs fuel exposure, E (Mwd/MTU), will be maintained. This plot will be extrapolated to the minimum reactivity necessary for proper reactor control. This extrapolation, together with a prediction of anticipated average power level, will determine the time, t_1, at which additional fuel is needed. The fuel which must be removed at t_1 includes any fuel which would exceed the allowable E_{max} before the reactor reaches its next refueling time, t_2. Any fuel left in the core to obtain higher exposure for experimental purposes will not be subject to this restriction. The reactivity necessary to reach t_2 will be supplied at t_1 by adding the appropriate number of elements at the proper enrichment, $\mathcal{E}$. The maximum number of fuel elements loaded is limited to the available core positions and, possibly, by the number of fuel element shield plugs, process tubes, and other hardware available for assembly of new elements prior to shutdown. If fuel element procurement time is greater than normal shutdown interval, the above calculations must be projected two shutdowns ahead to ensure that fuel is available when needed.

Since a higher enrichment will generally allow operation to greater E_{max}, an economic balance should be made to assure that each enrichment selected by the above procedure is economically justifiable. It is currently calculated that any reasonable increase in $\mathcal{E}$ can be justified by the cost reduction from the corresponding increase in E_{max} up to the limits discussed above.

5. Steady-State Cycle

As mentioned above, the recommended steady-state cycle is based on a 9-zone core with 7 months between refueling. The batch size, number of zones, and refueling cycle time are all related and are selected to give the best economic balance. During the initial years of reactor operation before the steady-state cycle is reached, the batch size will vary considerably. It is not essential that batch sizes ever become constant, although for ease of bookkeeping, scheduling, and reactivity calculations a constant batch size would be useful. Since the initial core contains only unexposed fuel, it will take a number of years to reach the steady-state UC cycle. The initial fuel change currently planned is addition of a number of elements and removal of a smaller number of spent elements after about 12 calendar months of power operation at 0.5 plant factor. It will take at least 5 yr to reach something resembling a steady-state cycle, and even to accomplish this requires intentionally sizing batches toward steady-state conditions. The incentive for achieving a steady-state or repeating cycle is the lower fuel costs associated with it as compared with irregular fuel loadings.

After the fuel element allowable maximum burnup has been firmly established by operating experience and fuel examination, fuel of the enrichment to achieve this exposure will be loaded at refueling and the plant will be operated until reactivity has decreased to the minimum acceptable level. Refueling shutdown will then be accurately predicted ahead of time to facilitate planning for various shutdown maintenance activities.

C. RECORD OF INDIVIDUAL FUEL ELEMENT EXPOSURE

The average fuel exposure, E, will be determined and recorded for each fuel element in the reactor for each interval of operation. The integrated exposure of each element will be used to estimate required removal time and to guide the fuel examination program. For regular intervals of operation, over which time the fuel element variable orifices are not changed significantly, the following information will be used to calculate E for each element: (1) reactor integrated thermal power; (2) variable orifice positions, including changes during the interval; and (3) daily fuel channel outlet temperature profile.

From the total reactor integrated power for the interval considered and the relative power distribution the integrated power, Mwd, will be calculated for each fuel element. The average exposure of the element is the integrated power

divided by the metric tons of uranium in that element. Peak exposure of an element is obtained from the average exposure by the estimated peak/average ratio for that element.

Axial temperature profiles of the thermocoupled fuel elements will be available as a function of fuel element power level. These profiles will be kept up-to-date to account for changes in the axial flux distribution. From these data, the peak fuel temperature as a function of element power will be known, and peak fuel temperature for each element will be recorded along with the accumulated exposure during the interval under consideration.

Fuel exposure records will be maintained for each element as a function of maximum temperature. For each operating interval the peak fuel temperature of an element will be estimated as above, and all exposure for that element will be recorded under the appropriate range of maximum temperature (e.g., 1050 to 1100°F). The cumulative exposure within each range of maximum temperature will also be recorded. The total exposure of the element will be the sum of exposures at the different temperature ranges. The exposure recorded for each element will be E_{max}.

D. FUEL EXAMINATION PROGRAM

It is planned to periodically examine irradiated fuel elements to assess the radiation damage to fuel and thereby establish the allowable exposure of the fuel and the time at which it must be removed from the reactor. In order to accomplish these objectives, fuel slugs from specified fuel rods are extensively and accurately measured before rod fabrication and insertion into the core. After a predetermined exposure, the same fuel rods will be removed from the respective bundles, shipped to a hot cell, and examined for changes in properties as a function of exposure.

1. Preirradiation Measurements of U-Mo and UC

Fifteen U-Mo elements in the initial core contain a total of 45 premeasured fuel rods. Three of the elements also contain thermocouples within some of the fuel rods for determination of operating fuel temperatures. The preirradiation measurements on this fuel include slug length, diameter, density, gammagraphs, and photographs. The bond sodium level and OD of completed rods were determined, and control specimens of fuel are being stored for future comparison with irradiated fuel.

At least 2 rods of each of the 10 UC elements currently being fabricated for the first core will contain premeasured fuel slugs. Measurements similar to those for U-Mo will be performed for these selected UC fuel rods; in addition, more detailed metallography and analysis of impurities will be made on each heat of UC.

Quality control records are being kept on all fuel and fuel cladding. These records ensure that the fuel rods are within fabrication specifications. Therefore, gross changes in fuel can be measured by examing fuel rods other than those with specific irradiated measurements, if additional examination should become necessary.

2. Postirradiation Examinations

The postirradiation examination of U-Mo and UC fuel rods will consist of the following operations.

a) Removal of selected fuel elements from the core at predetermined exposure levels.

b) Use of the HNPF maintenance cell for separation of premeasured rods from the fuel bundle, visual examination of the rods and the remainder of the bundle, and packaging selected rods for shipment to a hot cell.

c) Detailed hot cell examination of fuel rods and slugs including visual observation, gamma scan, and OD measurements of complete rods; length, diameter, and density measurements of specific fuel slugs; and chemical and metallographic analysis of slugs.

A comparison of these data with the preirradiation measurements will provide a means of estimating the effect of radiation on the fuel at HNPF conditions. These results can be extrapolated to conditions which would result in in-core fuel rod failures, and thereby be used to guide the fuel management program with respect to allowable exposure of the remaining fuel.

The present schedule for fuel examination is presented in Table II. Both the peak burnup at withdrawal and the dates given are tentative and subject to change depending on actual plant load factor, normal reactor shutdown schedule, and results of the initial examinations.

TABLE II

TENTATIVE WITHDRAWAL SCHEDULE FOR HNPF FUEL EXAMINATION PROGRAM

Element	U-Mo Withdrawal Time		UC Withdrawal Time	
	Peak Mwd/MTU	Mo/Yr	Peak Mwd/MTU	Mo/Yr
1	1500	9/63	5,000	9/64
2	2500	12/63	7,500-10,000	
3	3500	3/64	12,000-13,000	
4	4500	7/64	16,000-17,000	
5	5200	9/64	20,000	
6	6100	1/65	As required	
7	As required		As required	

3. Maintenance Cell Modifications

A number of mechanical modifications will be made in the HNPF maintenance cell to enable operators to perform the necessary operations related to the fuel examination program. These operations are the selection and removal of the proper fuel rods from the elements which have been removed from the core for examination, and the insertion of these rods into the fuel rod shipping cask (see below). The basic items needed in addition to present maintenance cell equipment are two sets of master-slave manipulators and a low-magnification periscope. These modifications will be completed prior to the first fuel element examination.

4. Fuel Rod Shipping Cask

A cask is being designed to transport individual fuel rods from the reactor site to the Components Development Hot Cell (CDHC), at Santa Susana, California, for the detailed examination of fuel and cladding described in Section VI. c. 2, above. This cask will be capable of transporting from 1 to 4 individual fuel rods, and could be used to transport an entire fuel bundle. It is designed to meet the requirements of proposed Regulation 10 CFR Part 72. The cask can be used for either U - 10 Mo or UC fuel rods, and has a total shipping weight, including cradle, of ~ 55,000 lb.

VII. OTHER CORE ANALYSIS

A. IN-CORE TEMPERATURES

Thermocouples are installed in the reactor to provide normal operating information, temperatures of specific core elements, and temperatures within the reactor structure. There is also a measurement of internal pressure of the instrumented moderator element.

1. Normal Operating Temperatures

The thermocouples attached to the variable orifice of each fuel element measure the coolant outlet temperature of each element every 6.4 min. The orifices are normally adjusted to maintain each outlet temperature within 15°F of the upper plenum or reactor outlet temperature. Sustained differences between individual outlet temperatures and the reactor outlet temperature will be factored into the calculation of the power level and fuel exposure rate of that element.

The three sodium temperature-measuring elements and the neutron source element are instrumented to measure moderator coolant temperature in four core channels. Each sodium temperature-measuring element consists of graphite logs encased in a stainless steel jacket; the surface of the logs is grooved to hold the thermocouples against the jacket. The moderator coolant flow rate will be adjusted to maintain the moderator coolant temperatures within acceptable limits.

2. Thermocoupled Fuel Elements

Three of the U-Mo fuel elements and one of the 10 UC fuel elements for the first core have thermocouples within the fuel slugs and in the coolant flow channel. These thermocouples will be used to calculate the axial power distribution of the reactor as a function of power. They will also provide a measure of the peak fuel temperature vs fuel element power, based on measurements at different reactor power levels. The measured fuel temperatures, corrected for the effect of the thermocouple hole in fuel slugs, will be compared with predicted fuel temperatures for evaluation of the analytical methods and assumptions used to calculate these temperatures.

Temperatures of thermocoupled fuel elements were used at very low power, about 300 kwt, to determine power level for calibration of the nuclear instruments. During subsequent testing, the temperatures have been recorded at each power level. During the rise-to-power testing, extrapolations to full power temperatures will be made from lower power data.

3. Other Core Element Temperatures

The instrumented moderator element contains thermocouples at selected positions on the stainless steel sheath, along the graphite centerline, and within the getter. The thermocouples on the sheath will provide data on the steady state and transient temperature differences between the moderator can flats and the scallops. These temperature differences are expected to have a significant effect on moderator can life. The graphite centerline temperature measurements will provide an indication of the decrease in graphite thermal conductivity with radiation. The getter at the top of each moderator element is designed to absorb any CO, CO_2, or H_2 evolved from the graphite. Effectiveness of the getter will increase with temperature, above a threshold of 900 to 950°F. Comparison of the getter temperature with the element internal pressure, discussed below, will give information on the gettering rate and the overall effectiveness of the getter.

One control rod poison column has been instrumented with thermocouples near its midplane. This poison column, which cannot be attached to an actuator and drive, will be installed into a control rod position before the initial rise above 15% reactor power. At a number of power levels between 15 and 100% power, the temperatures of the rod will be recorded. From the recorded temperatures at lower power levels, extrapolations will be made for full power control rod temperatures; these full power temperatures are expected to be no greater than about 1800°F.

All core element temperatures will be compared with predicted values to verify original design calculations.

4. Core Structure Temperatures

Thermocouples on the reactor vessel, including the reactor vessel bellows, will provide a measure of the vessel temperature distribution. These temperatures will be observed as part of the core temperature studies.

5. Moderator Element Internal Pressure

The instrumented moderator element internal pressure is monitored by a pressure transducer located in the special shield plug for this element. The moderator elements are designed to operate with less than atmospheric pressure at all times. A getter is provided, as described above, to absorb any gases which may be given off due to thermal or radiation outgassing of the graphite. The history of the instrumented moderator element pressure during initial high temperature operation may provide information on outgassing and gettering rates.

B. ANALOG COMPUTER APPLICATION

1. Summary

The analog computer, which was purchased and installed at HNPF on recommendation of the HNPF-ROAP, is being used in connection with a number of post critical tests.

This report section briefly summarizes the method and progress to date on the application of the analog computer to two of these tests, the power coefficients test and the xenon poison test. In reactor operation subsequent to rise-to-power testing, these same methods will be applicable when measuring core parameters.

In predicting the reactivity of the reactor at any particular time, the reactivity contributions due to power-temperature conditions and xenon poisoning present special problems since they are transient effects.

The equations describing these power-temperature and xenon poisoning effects and their relation to changes in reactivity contain a number of parameters which have been calculated. These parameters are also being experimentally measured to decrease uncertainties in their values.

The determination of these parameters is made by simulating reactor transient behavior by use of the analog computer and matching this behavior with the actual behavior of the reactor when changes in power, sodium flow, and temperature are made. The parameters used on the analog computer are varied until the output from the computer matches the action of the reactor. The values of the parameters used in the analog computer circuit are then the ones desired.

At this time a portion of the power coefficient test has been completed. The preliminary results of this test are presented in Table III of this report.

2. Power Coefficient Test

The power-temperature effect on reactivity can be described by two power coefficients of reactivity, the prompt (or fuel and fuel-coolant) power coefficient, K_p, with its respective time lag, τ_p, and the delayed (or moderator) power coefficient, K_m, with its respective time lag, τ_m. These coefficients and time lags are measured in the power coefficient test.

a. Purposes of the Power Coefficient Test

The power coefficients obtained from power ramp experiments are used to provide increased knowledge about the kinetic behavior of the reactor. In addition, temperature coefficients for the fuel and moderator with their associated coolant flows are calculated from corresponding power coefficients.

Temperature coefficients are used to calculate the reactivity change in the reactor due to temperature changes in the fuel, moderator, and coolant. Therefore, by calculating the average temperatures of the fuel, moderator, and coolant at any time, the reactivity effects due to temperature can be predicted. The reactivity effect calculated from average temperatures and temperature coefficients will be used in the reactivity history analysis to calculate a portion of the predicted reactivity.

b. Procedure

The power coefficient test is performed by conducting power, flow, and inlet temperature ramps while monitoring the reactor flux, control rod position, sodium inlet and outlet temperatures. During power ramps, the sodium flow is held constant. During flow ramps, the power is held constant. The reactor kinetics are programmed on the analog computer along with power coefficient feedback circuits derived from heat transfer analysis. The reactor flux trace or reactivity trace (from control rod position) during the power ramp is used as input to the computer. Output from the computer circuits is matched with reactor behavior by adjusting the parameters in the analog power coefficient reactivity feedback circuit. These parameters are the desired prompt and delayed power coefficients of reactivity. The steady-state power coefficient is also obtained from the power ramp test.

c. Partial Low-Power Results

Some preliminary results from low-power testing are presented in the following table. The predicted results from the safeguards report (NAA-SR-5700) are presented, then follow test results at specified power levels.

TABLE III

HNPF POWER COEFFICIENTS

Power Level (Mwt)	Prompt		Delayed		Steady State
	Power Coefficient K_P (¢/Mwt)	Time Constant τ_P (sec)	Power Coefficient K_m (¢/Mwt)	Time Constant τ_m (sec)	Power Coefficient K (¢/Mwt)
Predicted values as per NAA-SR-5700	-0.5*	2.5	+0.6	~200	+0.08
2.5	-0.4	2.5	+0.4	~200	zero
10	-0.3	2.5	+0.8	~200	+0.5
20	-0.40	2.5	+0.45	~200	+0.05
38	-0.35	2.5	+0.40	~200	+0.05

*For the HNPF Reactor, reactivity, ρ, in percent, is equal to 0.00693 times the reactivity in cents.

d. Temperature Coefficient Analysis

By means of a heat balance analysis of the reactor, corresponding temperature coefficients will be obtained from the power coefficients. These temperature coefficients for the fuel plus associated coolant, moderator plus associated coolant, and inlet or grid plate temperature will be compared by the ROAP with the theoretically calculated design values and used to predict reactivity change due to power-temperature effects.

3. Xenon Test

a. Purpose

The results of the xenon poisoning test will be used by site personnel to predict xenon reactivity for startup operations, and by ROAP personnel to calculate the reactivity history.

b. Procedure

In performing the xenon poison test, the reactor is run at steady power for three days to build up xenon to its equilibrium value. The reactor is then scrammed, brought isothermal as rapidly as permissible ($\sim$7 hr), and is simultaneously made critical at zero power.

The reactivity of the reactor, measured with the period difference technique, is recorded at 1-hr intervals for three days. To analyze the test data, the xenon equations are programmed on the analog computer, reactor power is used as input, and the computer parameters are adjusted until the xenon reactivity output trace matches the measured reactivity of the reactor plotted during the test. The evaluation of the parameters permits calculation of the reactor xenon reactivity at any time and flux level.

c. Development of the Analog Computer Program for the Determination of Xenon Concentration and Reactivity

Here follows the detailed method developed by ROAP for applying the analog computer to xenon poisoning testing.

(1) Program

The differential equations for rate-of-change-of-concentration of iodine and xenon are:

$$\frac{dI}{dt} = \gamma_I \Sigma_f \varphi - \lambda_I I \qquad \ldots(22)$$

and

$$\frac{dX}{dt} = \lambda_I I + \gamma_x \Sigma_f \varphi - \lambda_x X - \sigma_x X \varphi . \qquad \ldots(23)$$

To solve for the concentration of xenon as a function of time and reactor thermal neutron flux, Equations 22 and 23 are programmed as shown in Figure 2 on an analog computer. An input voltage is selected to represent the 100% reactor power. The voltages representing other terms in the equations are scaled accordingly with magnitude and time scaling.

The equations are scaled for time using a scaling factor

$$\alpha_t = \frac{\text{sec of computer time}}{\text{sec of actual time}} \quad . \qquad \ldots(24)$$

A convenient choice for α_t in this problem is $\alpha_t = 10^{-4}$. Therefore, 1 sec computer time equals 10,000 sec actual time. Six days of xenon buildup and decay can be run in about 50 sec on the computer.

The output which is plotted in the y axis of an x-y plotter is taken from the output of Amplifier 1. From Figure 7 it can be seen that the output of Amplifier 1 is $-\overline{X}$, the voltage representing the negative xenon concentration.

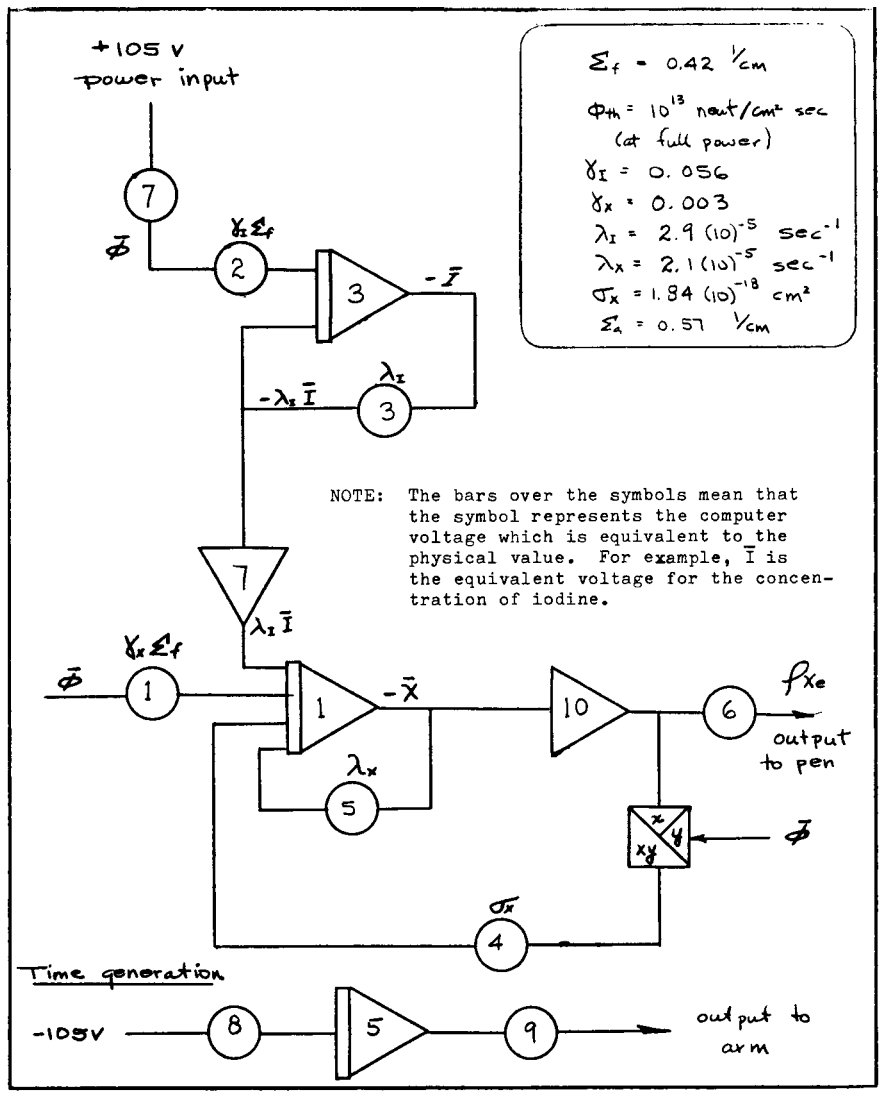

Figure 7. Xenon Analog Circuit for HNPF Reactivity Studies

The relationship between xenon concentration and reactivity is

$$\rho_{xe} = -\frac{\sigma_x f(100)}{\Sigma_a \beta} X \text{ (cents).} \qquad \ldots(25)$$

Using a value of 0.00693 for β, 0.8 for f, and 0.57 cm^{-1} for Σ_a, this gives

$$\frac{\sigma_x f(100)}{\Sigma_a \beta} = \frac{1.84(10)^{-18}(0.8)(100)}{(0.57)(0.00693)} = 0.506(10)^{-13} \text{ (cents).} \qquad \ldots(26)$$

The output is scaled by the above factor to give a solution in negative cents of xenon reactivity. (See Figure 8).

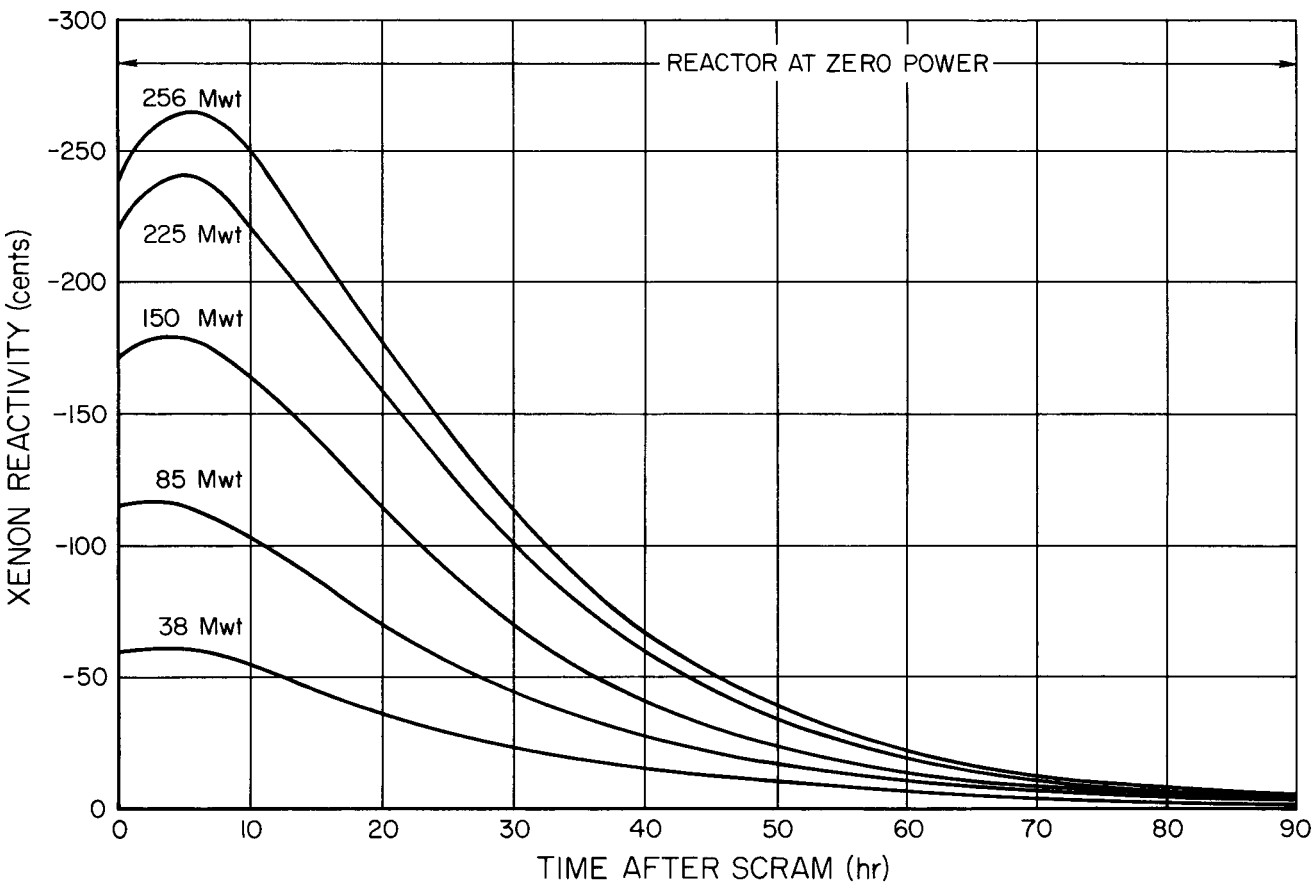

Figure 8. Xenon Reactivity vs Time After Scram

(2) Analysis of Test Data

The values f = 0.8, Σ_a = 0.57, and $\varphi = 10^{13}$ neutrons/cm^2 sec used in computing xenon reactivity are approximate values used for illustration of the

problem. The exact values are somewhat uncertain. Using the above values a xenon reactivity of -236 cents was computed for full power equilibrium. A comparison value is available from computer code calculations of the HNPF core. For example, a value of -241 cents xenon reactivity for full power equilibrium was computed with the AI KINDLE computer code. This code is a zero dimensional two group calculation.

The desired agreement of the analog curve with the "corrected" experimental curve can be made by adjusting the potentiometers in the analog circuit. To rescale f/Σ_a, Potentiometer 6 is adjusted. To rescale the flux, Potentiometer 7 is adjusted. Adjustment of other parameters may also be required.

The xenon reactivity curve obtained by observing change in rod position must be corrected for power-temperature effects on reactivity (a) while the reactor is at power, and (b) during the interval immediately following scram when the core ΔT is collapsing. Also, at higher power levels, a correction for the effects of samarium on this reactivity should be made.

(3) Definition of Symbols

I = iodine concentration (atom/cm^3)
X = xenon concentration (atom/cm^3)
t = time (sec)
λ_I = iodine decay constant (sec^{-1})
λ_x = xenon decay constant (sec^{-1})
γ_x = xenon fission yield, decimal fraction
γ_I = iodine fission yield, decimal fraction
σ_x = microscopic xenon absorption (cm^2)
Σ_f = macroscopic fission cross section (cm^{-1})
Σ_a = macroscopic absorption cross section for the fuel (cm^{-1})
φ = thermal neutron flux, neutrons/cm^2-sec (average in the fuel)
f = thermal utilization factor
β = delayed neutron fraction
ρ_{xe} = reactivity decrease due to xenon
$I(o)$ = iodine concentration at zero time (atom/cm^3)
$X(o)$ = xenon concentration at zero time (atom/cm^3)

VIII. HEALTH PHYSICS

The health physics portion of the HNPF-ROAP will be devoted primarily to analyzing radiation levels as a function of time. Analytical methods for this section have not yet been developed; therefore, most of the following discussion will concern operation and testing to date.

Postcritical testing to 15% power has assured adequacy of shielding at the HNPF. Radiation levels as monitored by the radiation detection and monitoring system have shown no irregularities. However, at the 10-Mwt power level, a detailed plant radiation survey revealed that some areas had slightly higher radiation levels than had previously been anticipated.

a. Outside R/A Vent Pipe Tunnel. A 0.65-mr/hr level was measured on contact with the north shielding wall adjacent to the nitrogen system valve board No. 30 near the floor. The expected radiation level had been 0.25-mr/hr but is somewhat dependent upon operating circumstances.

b. R/A Vent Lines from IHX's. Survey readings ranging from 0.15 to 0.25 mr/hr instead of the 0.1 mr/hr expected, were noted above the shielding for the vent lines from the IHX's to the secondary expansion tanks.

c. IHX Cell 3 Seal Plate. A maximum reading of 7.5 mr/hr was noted on a weld on the seal plate for IHX cell-to-nitrogen cooler area 3. Readings on the other seal plates averaged about 6.0 mr/hr. The expected was 0.25 mr/hr.

d. Loading Face Shield. A maximum level of 1.5 mr/hr was measured on the surface of control rod 8 actuator housing about 3 ft above the loading face shield. The expected level was 0.25 mr/hr.

No neutrons were detected in any of these areas. These possible problem areas will be given special consideration in the HNPF reactor operations analysis program during and after rise-to-power testing.

IX. MAIN HEAT TRANSFER SYSTEM

A. SYSTEM DESCRIPTION

The sodium heat transfer system consists of 3 independent circuits, each of which is directly connected to the reactor vessel. Each circuit consists of a radioactive primary loop which transfers thermal energy from the reactor core to an intermediate heat exchanger, and a nonradioactive secondary loop which carries heat from the intermediate heat exchanger to a steam generator. The primary-secondary loop arrangement was chosen to separate the steam system from radioactive sodium. Three independent circuits were chosen for flexibility of operation. Thus, if one circuit is out of service, the reactor can be operated with the remaining two circuits. In the event of failure of two circuits, the reactor will be shut down, and the third circuit will have the capacity to remove afterglow heat.

A flow diagram of one of the heat transfer circuits is shown in Figure 9. Each primary loop includes a variable speed centrifugal pump, a shell and tube, counter-flow design type intermediate heat exchanger, power actuated valves in the reactor inlet and outlet lines, and a check valve in the reactor inlet line. The inlet line throttling valve serves as a flow control valve, and is used mainly during reactor shutdown to control convective sodium flow for removal of afterglow heat from the reactor core. The check valve prevents reverse flow and concomitant thermal shock of the reactor vessel and IHX. The reactor vessel serves as an expansion tank for the primary loops. The reactor vessel pressure is maintained at a positive 1-to 6-in. H_2O by a helium atmosphere above the surface of the sodium pool. This assures an inert gas atmosphere and prevents inleakage of air.

Each secondary sodium loop consists of the secondary side of the intermediate heat exchanger, an expansion tank, a variable speed centrifugal pump, a steam generator, and a power-actuated throttling valve. The steam generator consists of an evaporator and superheater of shell-and-tube design and a moisture eliminator. The expansion tank, with a capacity of about 300 ft^3, provides space for sodium volume changes and also serves as a pressurizing tank. By maintaining the helium atmosphere in the tank, the static pressure in the secondary loop is held above that in the primary loop to assure that any possible leakage between the two loops would be from the secondary loop to the radioactive

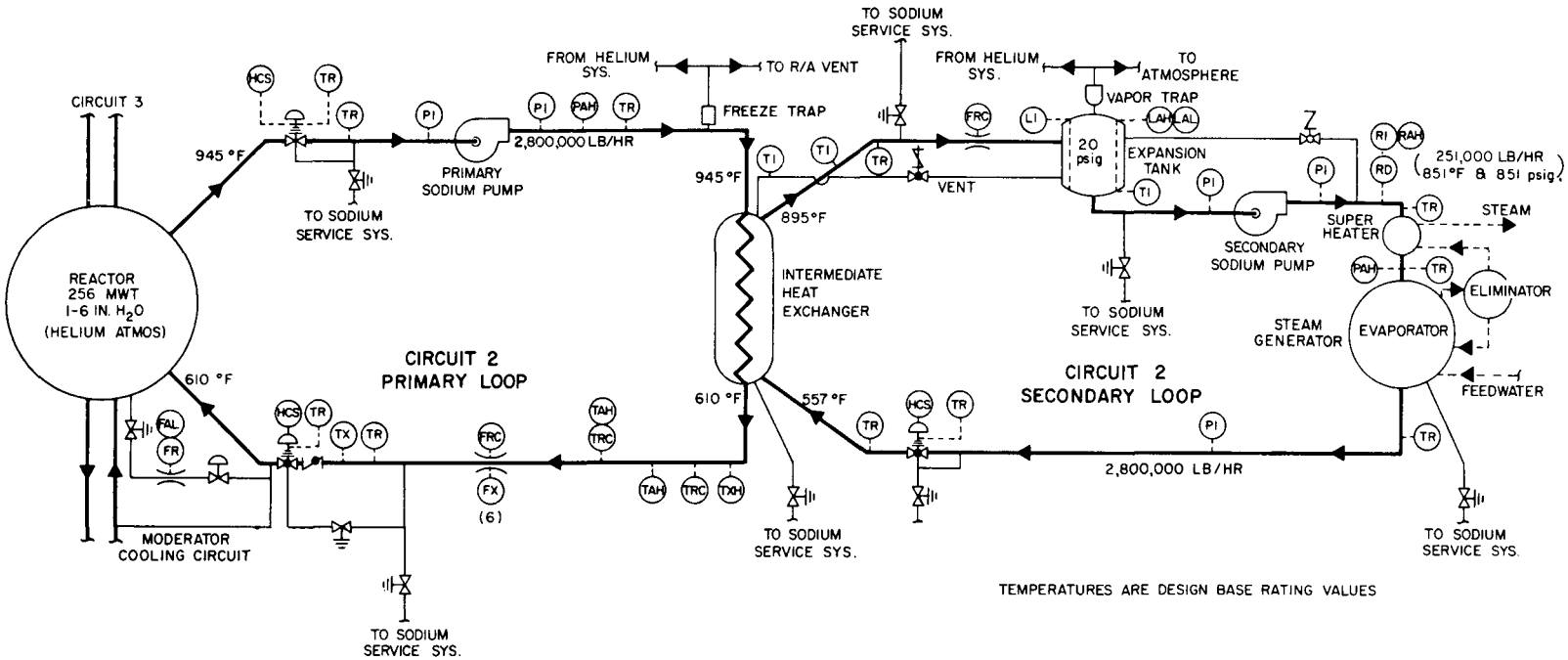

Figure 9. Sodium Heat Transfer Circuit

primary loop. The secondary loop throttling valve functions as a flow controller for convective flow when the reactor is shut down, to assist in maintaining the thermal gradient across the intermediate heat exchanger.

B. SYNOPSIS OF PERFORMANCE HISTORY

Testing of the main heat transfer system has been completed to 38 Mwt (15% of full power). Some system deficiencies have been discovered and corrected. Other deficiencies in the main sodium pumps and intermediate heat exchangers will be corrected by modification during the forthcoming shutdown period (March and April 1963).

The main sodium magnetic flowmeters need recalibration. This will be accomplished during the rise to full power by using steam-side heat balances as bases.

Though the hydraulic testing program has been hindered somewhat by the removal of the faulty IHX unit from Loop No. 1 (Section IX-D), and by certain necessary pump modifications, indications of satisfactory system operation at design conditions have already been obtained.

C. FREE SURFACE SODIUM PUMP PERFORMANCE (Figure 10)

Some deficiences of primary and secondary free-surface pumps were discovered during the initial heat transfer and hot circulation tests. These problem areas have been or are in the process of being corrected. Indications are that the pumps will perform satisfactorily at the design operating conditions.

In the primary sodium loops, a low pump barrel liquid level caused helium cover gas entrainment when the free surface pumps were operated at less than design head conditions at relatively high flow rates. The pumps have excess head and capacity to allow for future alternate fuels.

Under low head conditions, flow from the pump barrel to the pump suction through 8 impeller weepholes is greater than the flow supplied to the barrel by leakage from the sodium-pressurized hydraulic bearing and the barrel peripheral seal. This condition could be alleviated by adjusting fuel channel orifices or by use of the throttle valve to increase the discharge head, but these expedients were discarded in favor of plugging 4 of the 8 impeller weepholes in Pump 1.

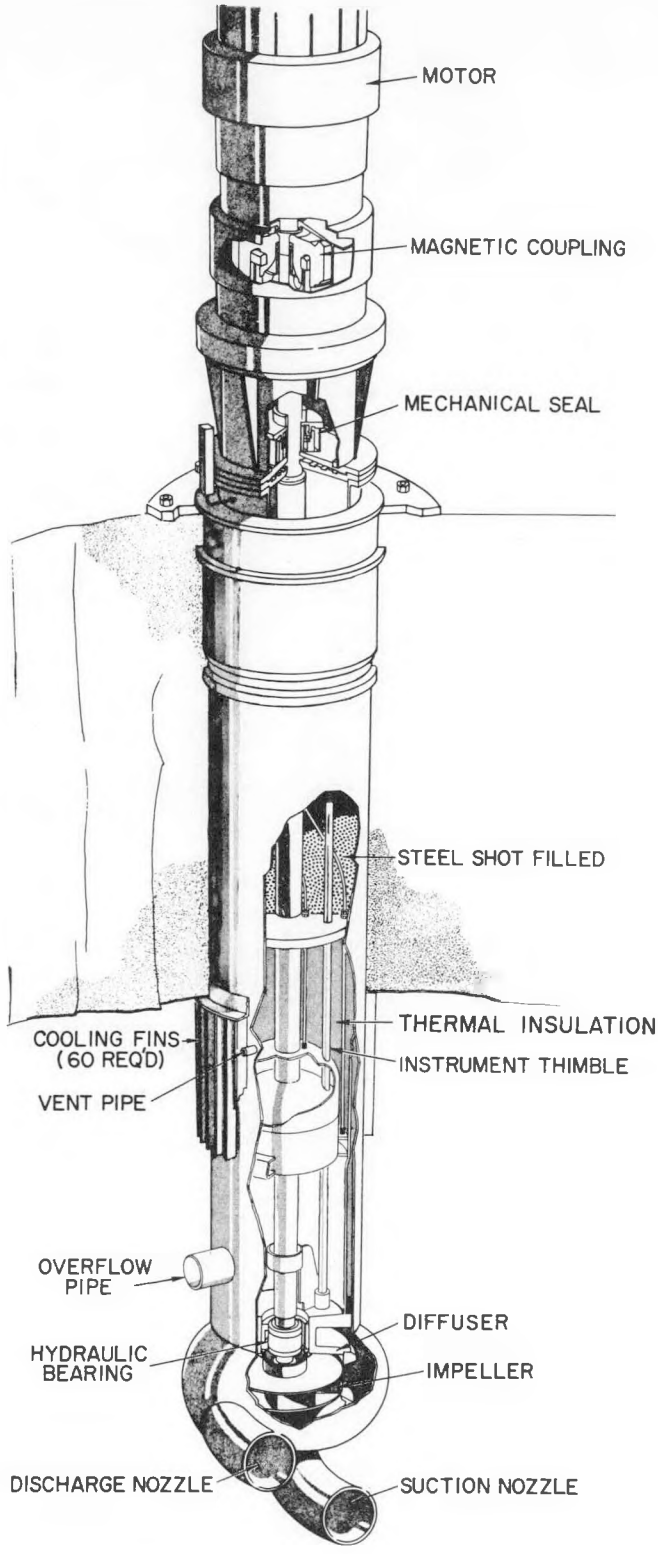

Figure 10. Sodium Free Surface Pump

Testing has shown that this modification has successfully corrected the tendency for primary Pump 1 to entrain cover gas. The other two primary pumps will be similarily modified.

D. INTERMEDIATE HEAT EXCHANGER PERFORMANCE (Figure 11)

On November 18, 1962, one of the two exchangers in heat transfer Loop 1 developed a tube leak. This was first detected as a drop in sodium level in the secondary Loop 1 expansion tank. While this was being verified, using portable probe, a reactor high level alarm was actuated. Immediate investigation disclosed that the reactor sodium level had been gradually increasing for 2-1/2 hr (level is read at 2-hr intervals). A total level increase of ~0.3 ft occurred in the reactor.

After level instruments were determined to be operating correctly and the levels in the expansion tanks of other two loops were not changing, primary Loop 1 pressure was increased above that of the No. 1 secondary loop to return the excess sodium and further verify the leak. (No hazard to operating personnel or to the plant was involved, since the primary sodium was not highly activated.) The reactor level changeover during the next 6 hr was reflected by the level change of secondary expansion Tank 1.

To avoid further sodium transfer between secondary Loop 1 and the primary system, the reactor and primary Pump 1 were shut down; and primary blocking and throttle valves were closed preparatory to draining the sodium from secondary Loop 1. Following standard operating procedure, the secondary system was pressurized to 15 psig, using helium. While the secondary system was draining, the reactor level again showed a rise.

Testing of both exchangers in Loop 1 revealed that 1-A was defective. The unit was cut from the heat transfer loop and removed to the high bay area. The piping of Loop 1 was properly capped and readied for operation with only Unit 1-B, so the reactor and plant test program could proceed to the 38 Mwt power level.

The tube failure occurred ~42 in. from the bottom tube sheet in a peripheral tube, 3 rows from the inlet impingement baffle. The failed tube was found to be completely separated at the failure point. All pieces of the failed tube were sent to the Argonne National Laboratory for metallurgical and mechanical

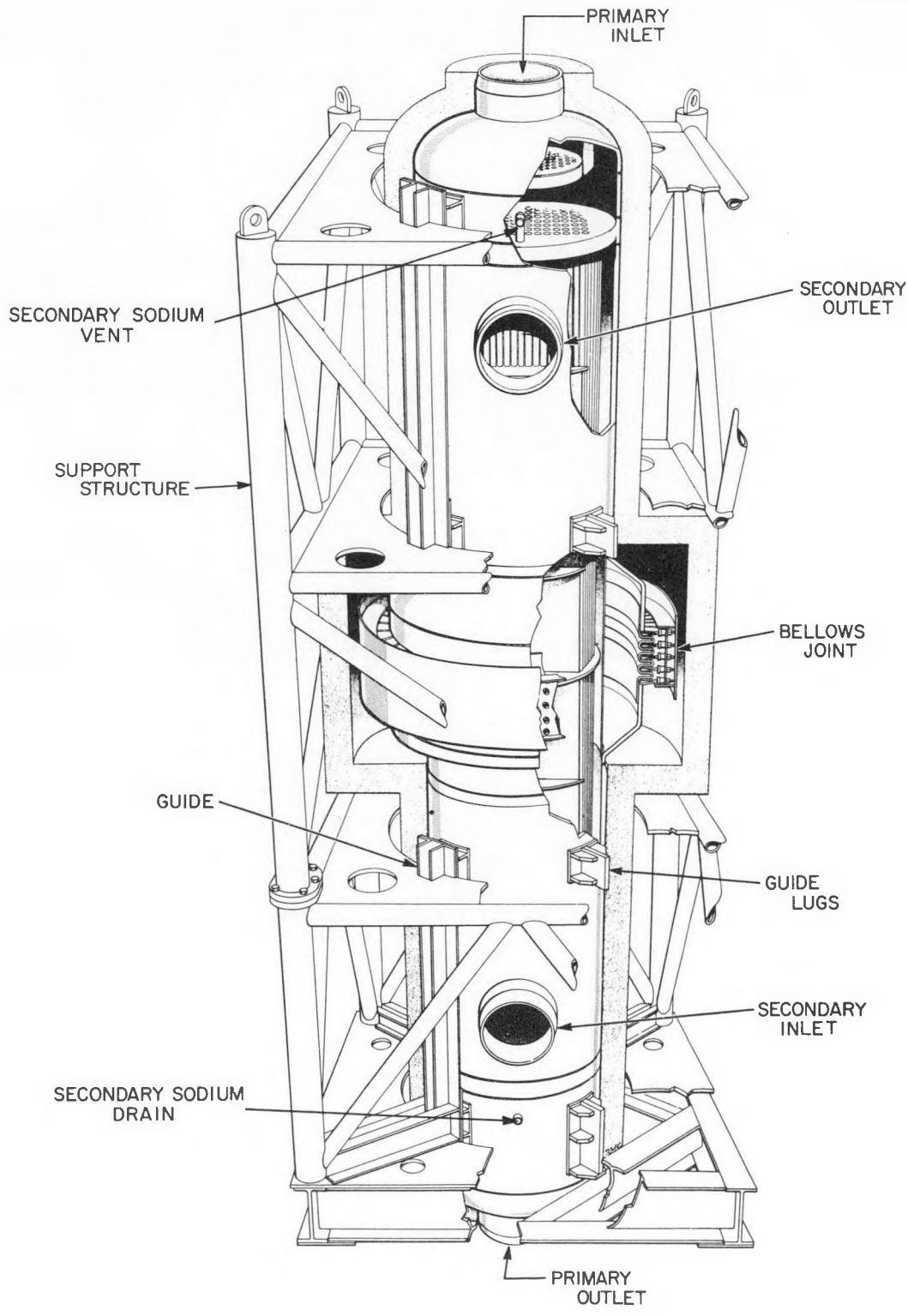

Figure 11. Intermediate Heat Exchanger

examination. The examination indicated that the failure was due to fatigue in the baffle plate area, induced by vibration. Further proof of the method of failure was provided by force-vibrating identical sections of tubing until failure occurred. The failure of test sections in all cases was remarkably like that of the failed IHX tube.

Calculation of sodium flow velocities indicated that local cross-flow velocities at the first tubes near the sides of the shell inlet diffuser baffle are in the range of 12 to 15 ft/sec at full flow. The natural frequency of the failed tube was calculated to be ~42 cycle/sec, and the velocity required to cause a Vonn Karman vortexing or similar type vibration effect was calculated to be between 10 and 11 ft/sec. It was concluded that at a flow rate slightly below that corresponding to full power flow, the required velocity for resonant vibration of the peripheral tubes near the inlet diffuser baffle would be attained.

In February, vibration tests were run on the IHX's and pumps to determine if the amplitude and frequency ranges for various operating conditions might cause additional IHX failures. Vibration pickups were located on the guide lug pads on each side of the secondary nozzles and on the first piping hanger away from the IHX.

The test consisted of raising primary and secondary flows together in 10% flow increments; taking measurements of the dominant frequencies present at each stop and scanning for frequencies in the range of 1500 to 5000 cpm. IHX-1B was tested first. At ~84% flow, there were indications of high velocity inputs to the shell corresponding to loadings in the range of from 5 to 8 g's. These readings were recorded at frequencies above 80,000 cpm, and seemed to correlate within reason to the resonant vibration problem existing in the primary and secondary pumps because of the even number of blades existing on both impeller and diffuser. Readings being taken were really under double flow conditions, since the parallel unit 1-A had been removed from the loop.

The velocity scale readings phased out at about 50% flow. A 3600-cycle frequency appeared at 110% flow and stayed with the unit for the entire range. This signal originated in the pump motor casing. At 70% flow in the unit, a 2200-cycle frequency reading was found, which corresponded quite well with the calculated natural tube frequency. This signal disappeared at flows above 74% and below 64%.

IHX's 2A, 2B, and 3B were tested in like manner with similar results. However, the velocity scale readings on the other two loops were measured at only 1/10 the amplitude measured on Loop 1. This change is attributed to the damping effect of the parallel units on the pump pulses. It should be noted that the high frequency input to the shell, although considerably reduced when 2 units are operated in parallel, corresponds to a vibration load equivalent to 100% earthquake design loading being continuously applied to the units. However, these loads can cause a long-time wear problem on the IHX tubing; and for this reason it has been recommended that new diffuser casings be obtained for the pumps to eliminate these high frequency pulsing loads on the IHX tubes. This recommendation is under consideration by plant supervision.

Variation in primary sodium flow did not affect the amplitude of vibrations, and the frequencies remained the same.

At the end of the report period, several methods of correcting the vibration problem are being considered. A procedure that has solved similar heat exchanger vibration problems is favored. It involves installation of damping shims between tube rows in the high sodium velocity area. These shims will act as additional, eggcrate-type support in the shell-side inlet area; and are assumed to fix the tubes at this location. Calculations show the natural frequency of the first span will be increased to about 217 cps. Since a slot must be cut into the shell, a procedure has been devised for removal of the vessel wall material without allowing foreign material to fall into the exchanger. The code status of the vessel will not be impaired by making this repair.

Heat transfer coefficients calculated for the intermediate heat exchangers at the 38-Mwt level are in good agreement with those expected.

E. STEAM GENERATOR PERFORMANCE (Figure 12)

Initial efforts at preheating the steam generators incurred problems with temperature gradients, in that the steam heating on the water side seemed to concentrate at the steam inlet nozzle rather than distribute itself evenly across the steam generator. A method evolved, in which a more even preheating temperature distribution was obtained by maintaining a partial vacuum on the steam generators while admitting preheating steam.

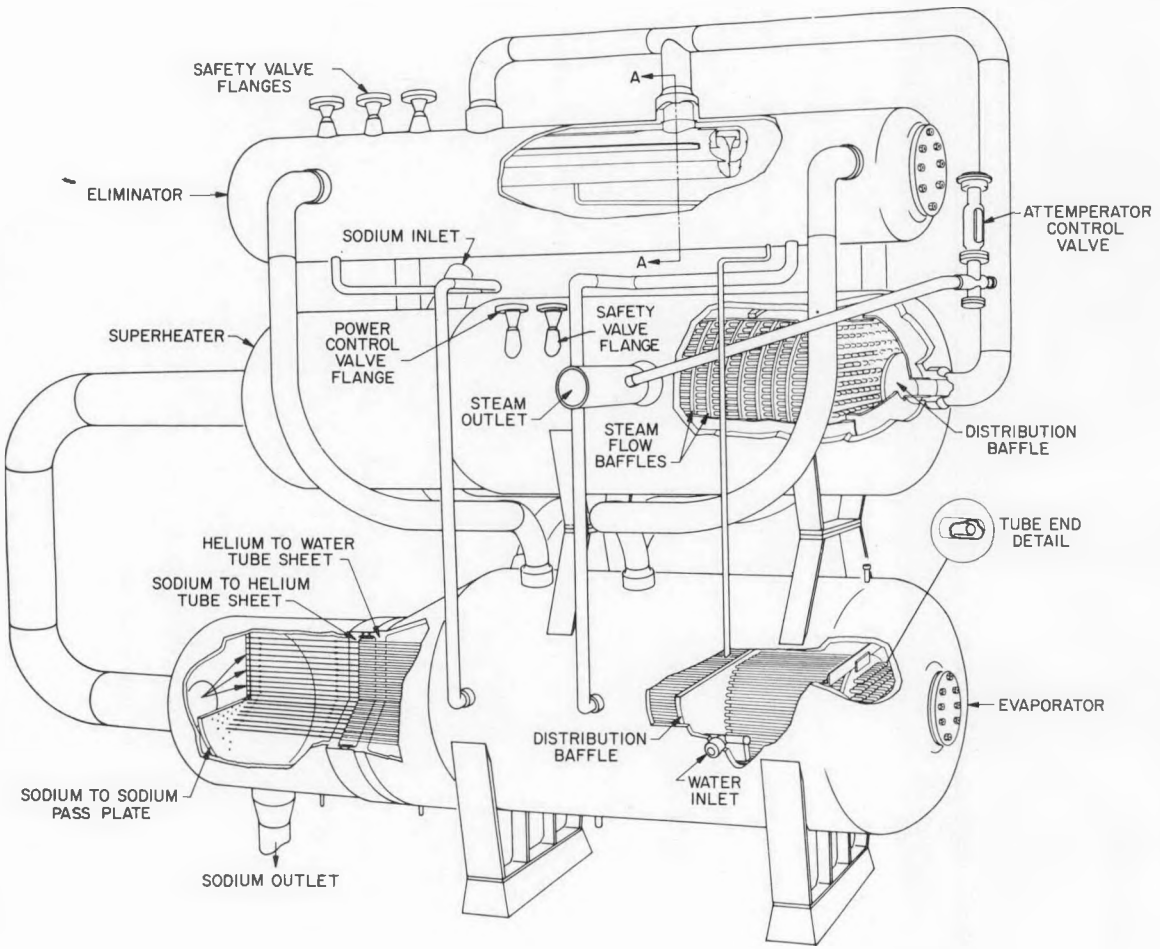

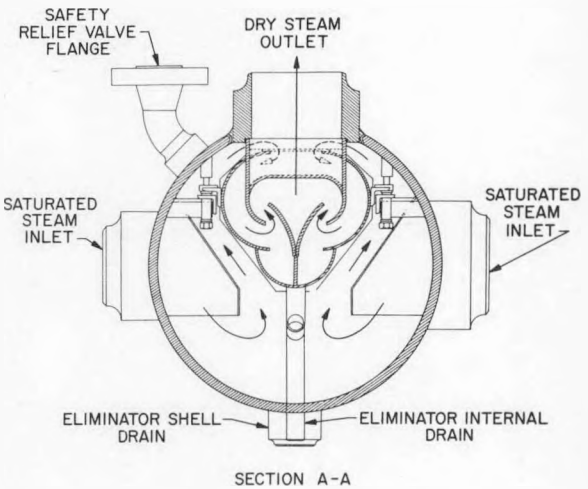

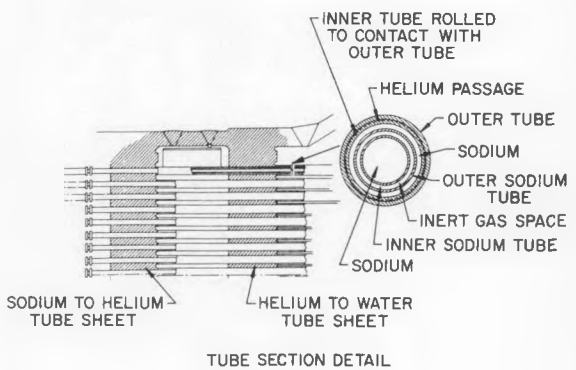

Figure 12. Steam Generator

At the 38-Mwt level, overall heat transfer coefficients for the steam generators, determined by experimental techniques, were far lower than those expected. The reason for this discrepancy is being investigated. It is suspected that location of the temperature sensing devices has given misleading data.

Tests of steam generator steam purity to the 15% power (38 Mwt) level have shown that the percent carryover in all steam generators was between 0.01 and 0.1%. No attempt has been made to correlate carryover with steaming rate, because the present testing is below the normal operating range of the HNPF. The guaranteed purity of steam leaving the eliminator is 0.25% moisture and 1 ppm impurities.

F. THROTTLE VALVE PERFORMANCE

The freeze-seal throttle valves in the primary and secondary loops have caused operational difficulty, and have required much maintenance work. During the hot circulation test, 3 malfunctions occurred. Two of these were due to misalignment of the actuating mechanism, and one was caused by internal binding.

During a reliability test of the valves, primary Valve 1 slowed down noticeably. Investigation revealed that the crossarm attached to the valve stem had bent slightly (0.040 in.), and was causing binding of the jack screws. The crossarm was straightened and stiffened, using steel channel. Other valves were similarly modified.

Other valve failures have been caused by accumulation of sodium oxide in the stem seal and rapid wear of the thrust washers.

G. HYDRAULIC CHARACTERISTICS

Entrainment of helium into the secondary sodium was detected during performance of the preoperational test of the main heat transfer. Hydraulic tests after the modification of the secondary loops to bypass most of the flow around the expansion tank demonstrated that the progressive gas entrainment problem had been solved. The initial hydraulic data are of limited value, since the core pressure drop was simulated by positioning of throttle valves. Comparison of pump-expected performance with test data provided assurance that flows in excess of the design flow at full power (2.8×10^6 lb/hr/loop) had been achieved.

Removal of IHX-1A from Loop 1 because of a tube failure resulted in a sodium flow rate limit of 50% full power in all primary loops. Hydraulic tests on Loop 1 and the other two loops were conducted throughout the rise to the 15% power level, but were mainly for system surveillance because of the abnormal condition of Loop 1 and the flow rate restriction. It was observed that at up to 50% of full flow, the hydraulic characteristics of Loops 2 and 3 did not change appreciably from those obtained during the hot circulation test. Pressure drop data at these relatively low flow rates are subject to considerable error because of the small drop through the units and across the pumps. Testing showed that the flow of moderator coolant varied from 7.1 to 6.5% as the sodium flow rate was increased from 20 to 45%. Control of moderator coolant flow rates was satisfactory at 38 Mwt.

The hydraulic characteristics of the system after modifications are completed on the pumps and intermediate heat exchangers will be determined. This testing will include isothermal characteristics of the system.

H. STRUCTURAL INTEGRITY

Piping interferences were also observed during testing. All were cleared by relocation of hanger attachment points, removal of small amounts of insulation, modification of piping supports, and clearing away of structural material.

I. HNPF-ROAP ANALYTICAL METHODS

1. Hydraulics

The methods to be used in analyzing operating performance of the main heat transfer system are being developed. In general, it can be said that main heat transfer system hydraulics variables such as reactor core, steam generator, IHX pressure drops, and pump-coupling-motor data will all be followed as a function of time by control graphs. Rapid checks for abnormalities in the system characteristics will be obtained by comparing measured values with those obtained in the postcritical testing. Current data will be plotted relative to the reference value at the same power level or sodium flow rate. This procedure should detect short-term irregularities and trends with time. When anomalies are observed, all system variables will be reviewed to define and isolate the reason for the discrepancy.

a. Sodium Pumps

An overall check on the performance of the motor-dynamatic coupling-pumps is provided by the calculated overall efficiencies, compared with efficiencies obtained during testing and from manufacturer's data. The input power to the motor is calculated from motor current and voltage measurement and the power factor. The output hydraulic horsepower is calculated from the sodium flow rate and the pump differential pressure, with a minor credit for kinetic energy change across the pump.

A computation of pump efficiency requires calculation of the pump shaft input horsepower (bhp). This is obtained by correcting the motor input horsepower for the motor and dynamatic coupling efficiencies. The motor efficiency and speed are determined from the manufacturer's motor characteristic curves. The coupling efficiency is taken as the ratio of pump speed to motor speed. Pump rpm is measured by a tachometer. Pump efficiency is the ratio of the hydraulic horsepower developed by the pump to the input horsepower.

As a part of the ROAP, current pump efficiencies will be compared with those obtained during postcritical testing at the same flow rates. An observed decrease in pump efficiency of a given pump may be indicative of thrust-bearing wear, increase in labyrinth clearance, mechanical seal friction or an increase in overflow caused by wear of the sodium-pressurized hydraulic bearing.

The number of variables that will be followed has not been determined. As a minimum, pump speeds, ΔP's, and motor power will be compared with similar data observed initially.

Periodically, perhaps each 2 yr or as deemed advisable from analysis of the operating data, special pump tests may be recommended. The details of the testing procedure will depend on the evident departure from original pump characteristics.

b. Component Pressure Drops

Sodium pressure drops across the major components in both the primary and secondary loops will be closely followed, using control graphs to detect evidence of fouling or plugging. The control graphs will compare the pressure drop across each component with that determined during postcritical testing at the same flow rate.

Figures 13 and 14 give the expected sodium pressure drops through the IHX's, evaporators, and superheaters. A quick check on system hydraulic performance will be provided by plotting Pump ΔP vs sodium flow rate. Deviations from expected results will be investigated.

2. Heat Transfer

a. Heat and Material Balances

Heat and material balances will be made around the main heat transfer system to detect anomalies in heat transfer duties, flow meter, and other process instrumentation inaccuracies.

Sodium flow meter calibrations currently being checked by steam-side heat balances must be periodically rechecked to detect possible drifts with time. Errors in thermocouple accuracy will be partially alleviated by applying experience and calibration corrections. At the higher power levels when steam and condensate flow instrumentation are in the most accurate part of their range, it is anticipated that some of the discrepancies experienced at low power levels will disappear.

b. Intermediate Heat Exchangers

The two parallel shells in each loop will normally be considered a single heat-transfer unit. Equal division of flow through the units is expected, due to geometry, but will be periodically verified by comparing corresponding temperature of the two units.

Overall heat-transfer coefficients calculated at any time will be compared with those obtained at the same power level during postcritical testing. The calculated coefficients will also be compared with the predicted coefficients given in Figure 15.

Heat transfer coefficients will be calculated using the log-mean-difference technique. This technique assumes slight heat-transfer coefficient and specific heat change along the length of this counter-current type heat-transfer unit.

c. Steam Generators

Methods for analyzing the performance of the steam generators are being developed. It is planned to compare operating ΔP's (both steam and sodium sides) and ΔT's of the evaporators with those obtained during postcritical testing.

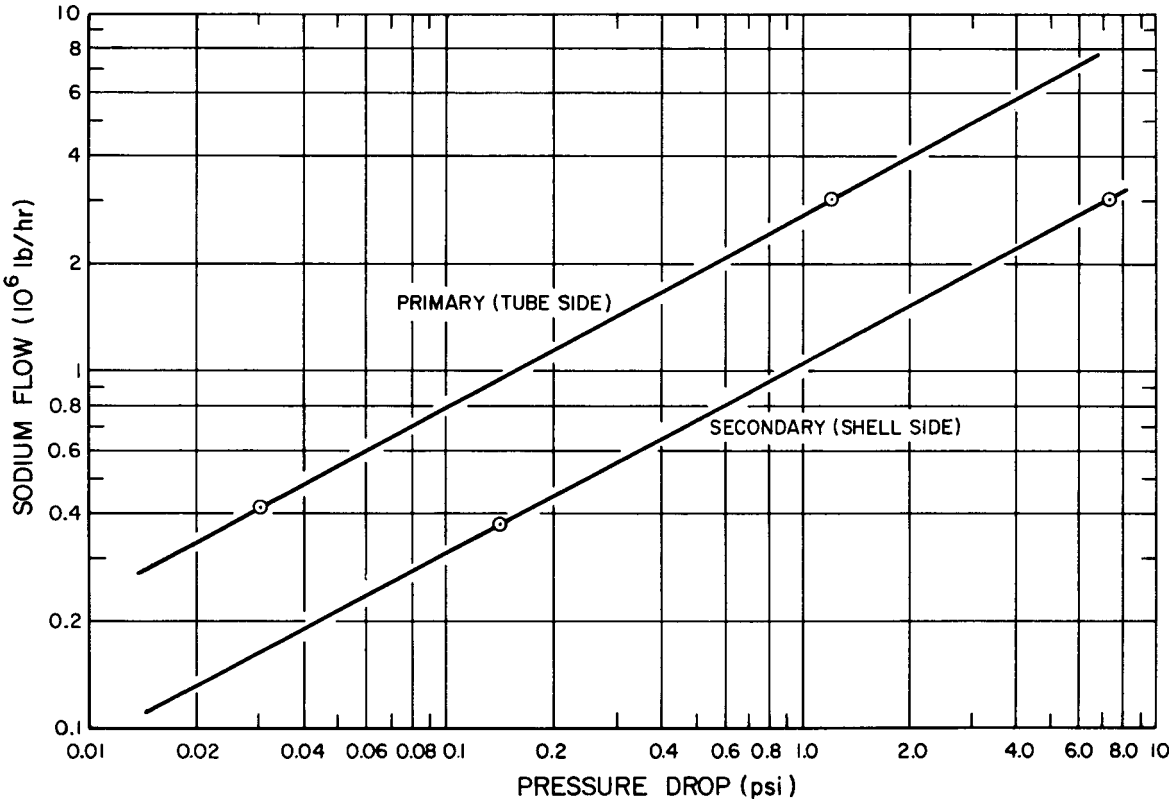

Figure 13. Intermediate Heat Exchanger Flow vs Pressure Drop

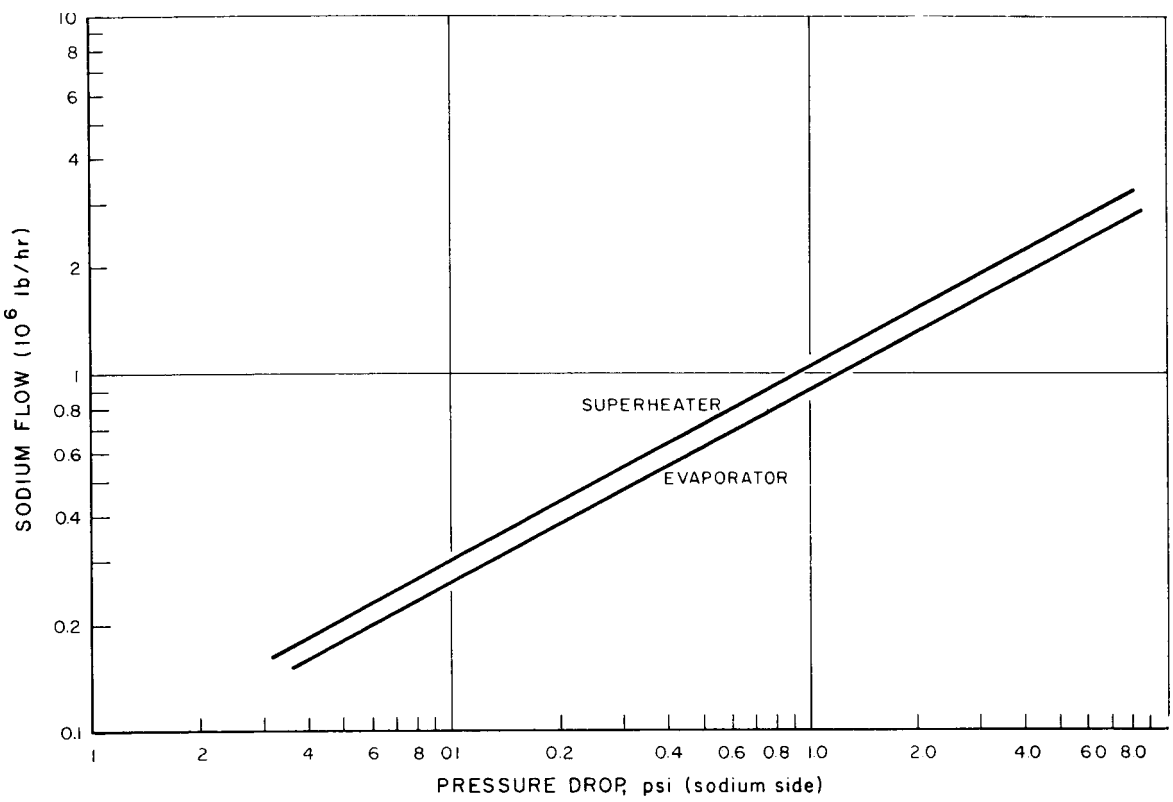

Figure 14. Steam Generator and Superheater Sodium Pressure Drop vs Sodium Flow

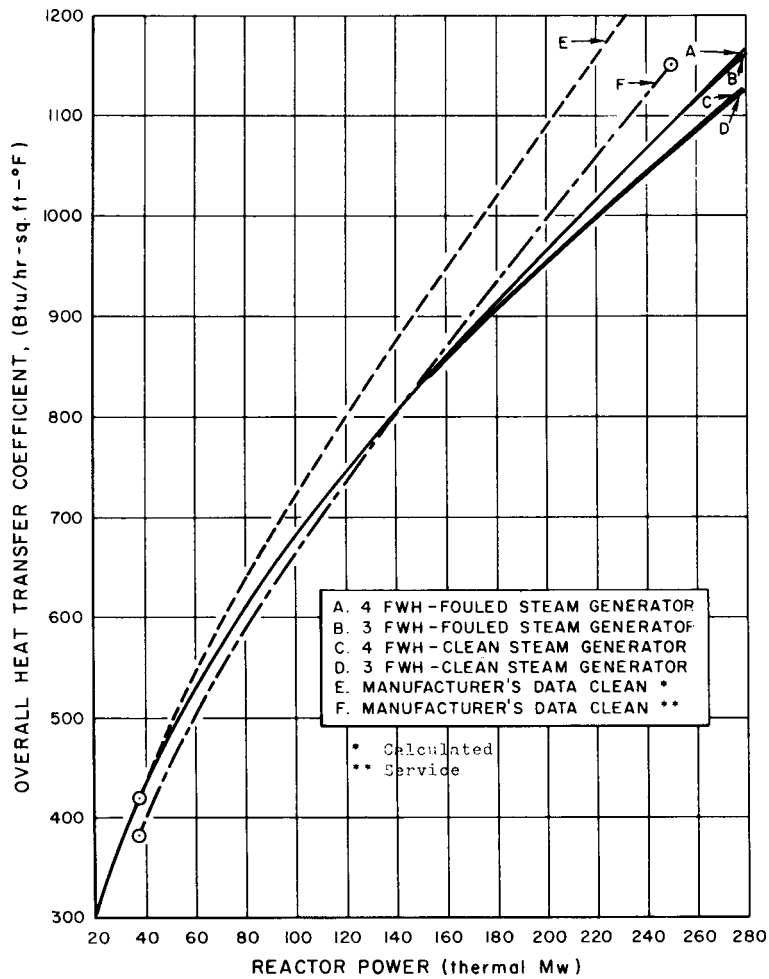

Figure 15. Intermediate Heat Exchanger Overall Heat Transfer Coefficients

It is also planned to follow and evaluate eliminator carryover data to verify that the generators are producing design purity steam (0.25% moisture).

Heat-transfer coefficients, estimated as a function of power by a computer study of the main heat-transfer system variables, are depicted in Figures 16 and 17. The equations used to determine these curves were adjusted to give the vendor's design data at full power. Heat transfer coefficients obtained during testing should check the values given in Figures 7 and 8 at full power, but may not follow the curves at the lower power levels. Performance data during normal plant operation will be compared with postcritical test results.

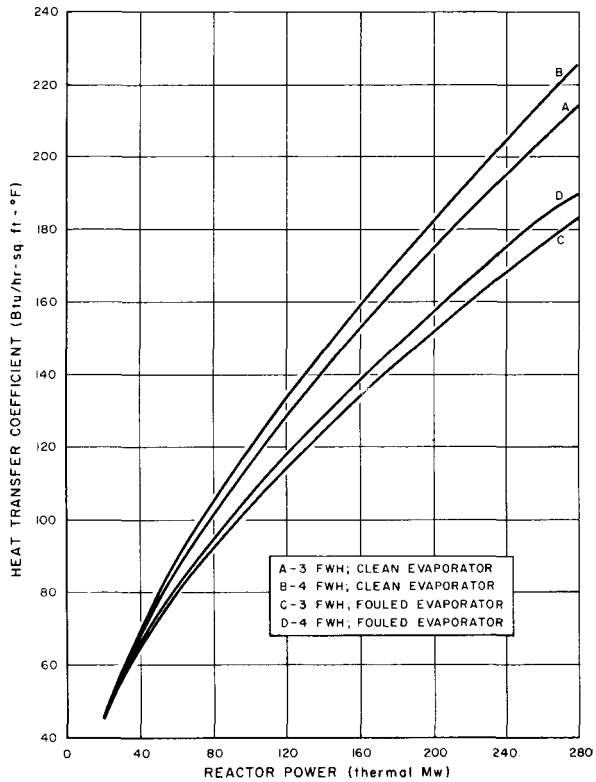

Figure 16. Superheater Heat Transfer Coefficient vs Power

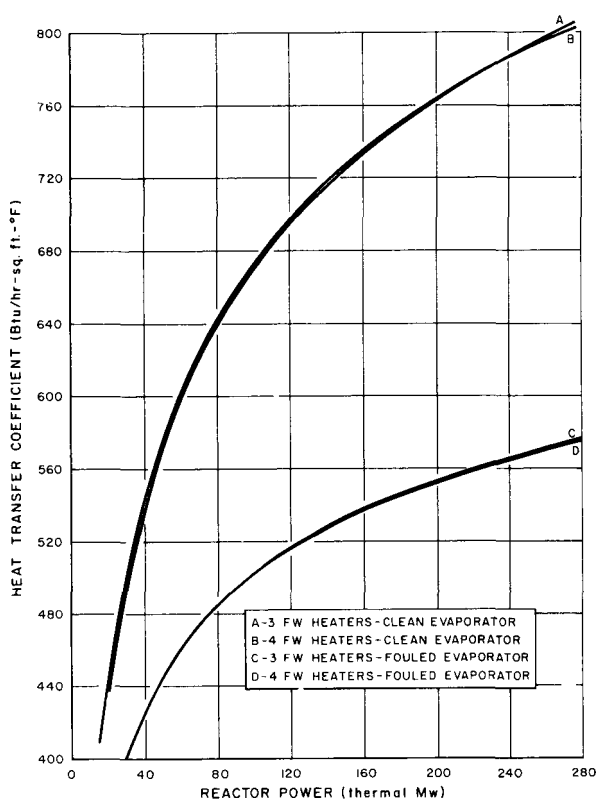

Figure 17. Evaporator Heat Transfer Coefficient vs Power

X. SODIUM SERVICE SYSTEM

The sodium service system (Figure 18) consists mainly of primary (for primary system sodium) and secondary (for secondary system sodium) drain and fill tanks, sodium melt stations, cold (oxide) traps, hot (carbon) trap, plugging meters (for sodium oxide content determination), and electromagnetic pumps. During normal plant operation, the sodium service system, besides furnishing a means to move sodium from one place to another, serves mainly (a) to remove oxide from sodium and (b) to remove carbon from sodium.

A. OXIDE CONTENT IN SODIUM

The ROAP methods for analyzing the oxide content in sodium and performance of the cold traps have not been finalized. Present plans are to continue following the sodium oxide content of the primary and secondary sodium as a function of time, using both tabular and graphical methods. This information is obtained periodically by operation of the plugging meters which are used to determine the temperature at which sodium oxide precipitation begins (plugging temperature).

The accumulation of oxide in cold traps will be calculated, as a part of ROAP, from sodium flow rates through the traps, the inlet or bulk plugging temperatures, and the minimum cold trap temperature. In the absence of continuous addition of oxygen to the sodium systems, bulk sodium oxide reduction should check the cold trap accumulation.

To date, cold trapping operations carried out on an intermittent basis on the primary and secondary systems have succeeded in maintaining the sodium oxide content within acceptable limits. The cold trapping duty has been greater than expected; to date, five traps have been removed from the primary system and one trap from the secondary system. Each trap is designed to hold 250 lb of oxide. Calculations indicate about 200 to 250 lb oxide are being removed per trap.

A summary of the plugging temperatures of the primary and secondary loops is shown in Table IV.

In order to understand fully the significance of this oxide history, it is necessary to refer back to Section IX of this report for highlights of plant activities associated with maintenance and modifications to the main heat transfer system.

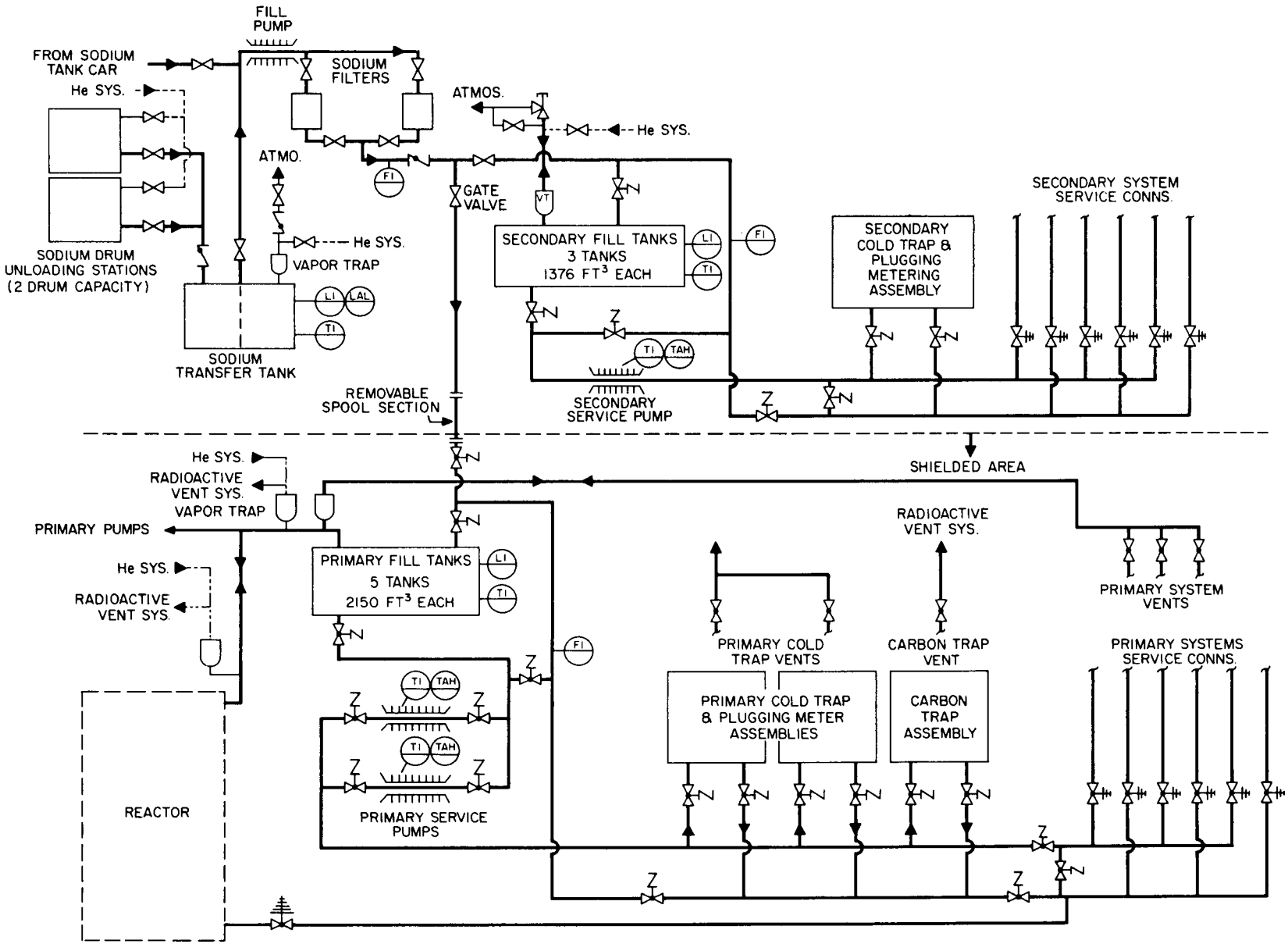

Figure 18. Sodium Service System

TABLE IV

PLUGGING TEMPERATURE HISTORY

Date	Primary Temperature (°F)	Secondary Plugging Temperature (°F)		
		Loop 1	Loop 2	Loop 3
9-3-62				345
9-5-62				260
9-6-62		303	289	
9-9-62		294		
9-16-62		295		
10-3-62			330	
10-3-62			288	
10-10-62		336		
10-14-62			330	
10-15-62	below 300		310	
10-18-62			480	
10-19-62	510	510	510	510
10-23-62		400		
10-24-62		298	390	
10-26-62				390
10-27-62	540			below 350
10-28-62	530	below 350	391	
11-1-62				311
11-2-62				275
11-3-62		355		250
11-4-62		317		
11-5-62		369		
11-6-62		250	312	
11-7-62			305	
11-8-62	522		296	
11-9-62	490		260	316
11-10-62	478			304
11-11-62	470			288
11-12-62	460			273
11-13-62	454			269
11-14-62	458	312		250
11-16-62		280		
11-17-62		263		
11-24-62			344	340
11-26-62				317
11-27-62				290
11-28-62				268
11-29-62			367	260
1-2-63	468	312		
1-3-63	482	300		
1-4-63	504		275	
1-5-63			288	
1-6-63	304		282	292
1-7-63		250	290	
1-8-63			250	
1-9-63				263
1-10-63		250		-250
1-17-63	496			
1-18-63	478			
1-19-63	459			
1-20-63	445			
1-21-63	424			
1-22-63	397			
1-23-63	388			
1-28-63		250		
1-31-63		250		
2-2-63		250		
2-3-63			266	
2-4-63				250
2-9-63	390			
2-10-63	361			
2-11-63	365			
2-12-63			270	
2-13-63			250	
2-14-63			250	
2-15-63			250	
2-17-63	363		250	
2-18-63	362			250
2-19-63	347			250
2-20-63	343			250
2-21-63	348			250
2-22-63				250
2-24-63	340	278		
2-25-63	320	250		
2-26-63	306			250
2-27-63	299			250

During the month of December 1962, cold trapping was accomplished with frequent interruptions due to testing, system draining, maintenance and modification, or cold trap replacement. By December 4th, the plugging temperature of secondary Loops 2 and 3 had been reduced to 280 and 260°F respectively (at this time, secondary Loop 1 was drained). Also, the primary system was drained and cold trapping from the primary fill tanks (PFT) was carried out.

Data from these runs are summarized in Table V.

TABLE V

DATA FROM COLD TRAPPING RUNS

PFT	Date	Plugging Temperature (°F)	Date	Plugging Temperature (°F)
1	12-5-62	457	12-16-62	314
2	12-5-62	444	12-15-62	290
3	12-5-62	-	12-18-62	360
4	12-5-62	468	12-15-62	330
5	12-5-62	465	12-16-62	300

B. CARBON CONTENT IN SODIUM

1. Program Summary

The HNPF-ROAP carburization surveillance program has concentrated on development of analytical methods for determining the carbon content and the carburization potential of the sodium in the primary system. These methods are completed and the program has been underway since October 1962. These methods are presented here in detail. Also, all HNPF sodium sampling data, including data prior to October 1962, has been accumulated and presented in Tables VI and VII.

Sodium samples are obtained from the upper plenum of the reactor and from the carbon trap. Stainless steel test specimens (tabs) are exposed to sodium from the sodium samples, and to primary loop sodium in the carbon trap. The results of chemical and metallurgical examinations of the steel tabs are used to estimate the carburization potential or effective carbon content of

the sodium. The effective carbon content is not necessarily the same as the total carbon content. Only the carbon in solution is available for carburization of stainless steel in the primary system.

The carburization potential, then, is determined from metallographic examinations of tabs exposed to the primary sodium in the carbon trap, or is estimated from the results of exposing fresh stainless steel tabs to sodium samples in a standard test.

It has been established (NAA-SR-MEMO-7804) that the amount of carbon permissible in the HNPF primary system during temperature operation is the effective carbon content that will carburize stainless steel to about 0.5 wt % surface carbon. This corresponds to an effective carbon content of about 24 ppm.

To date, two sets of stainless steel test tabs have been exposed to the primary sodium during carbon trap operation. The results of metallurgical examination of these tabs indicates an effective carbon content of about 21 ppm.

The following sections are brief descriptions of equipment, sampling procedures, and analytical methods currently being used in the carburization surveillance program.

2. Equipment

a. Carbon Trap

The HNPF carbon trap is an insulated, Type 316 stainless steel, vertical, cylindrical vessel containing 28,800 ft^2 of 20-mil stainless steel foil. The coil of foil is dimpled to provide a 0.060-in. gap for sodium flow at a design rate of 40 gpm.

Sodium from the primary loops is heated to 1200°F in an economizer by sodium returning to the system. The sodium then passes through a tee containing the sodium sampler and into the carbon trap. Flow through the foil packing is in an upward direction. The effluent sodium is heated to approximately 1260°F by an in-line immersion heater and returned to the system via the economizer where incoming sodium is heated.

b. Sodium Samplers

The carbon trap sodium sampler is shown in Figure 19. The sampler consists of a 304 stainless steel shell and internal baffle. A 125-gm

sodium sample is contained by the lower part of the shell when the sampler is removed. Three thicknesses of test tabs are welded together, forming the internal baffle.

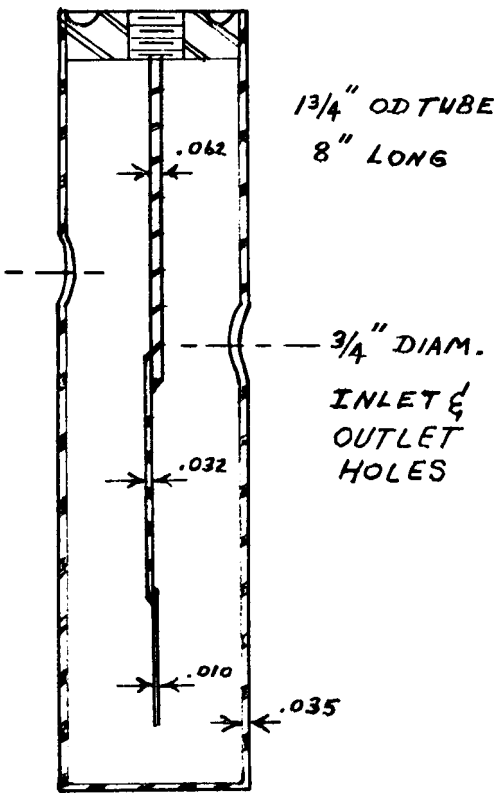

Figure 19. Sodium Sampler

The sampler assembly is supported in the 3-in. carbon trap inlet tee by a hanger rod. A Marmon clamp pipe joint provides access to the sampler at the completion of the run. Samples are removed after a decay and cooling period of approximately two weeks.

One-pound sodium samples are also removed from the upper plenum of the reactor during shutdown. The core sampler is suspended from a reactor shield plug and removed by the fuel handling machine. An inert atmosphere is maintained while taking the sample and placing it in a storage cell to cool.

c. Cover Gas Sampler

One-liter, stainless steel cylinders equipped with bellows seal valves are used to obtain samples from the helium cover gas. The sampling point is at the cover gas monitoring station.

3. Sampling Procedures

a. Carbon Trap Samples

The test tabs in the carbon trap sodium sampler are exposed to the primary sodium at 1200°F for a minimum period of 100 hr. At the completion of the run, the carbon trap is drained and cooled according to standard operating procedures. The cooled sampler is then removed from the tee and placed in a polyethylene protective envelope. Samplers are shipped to AI, Canoga Park, in a capped pipe nipple containing $CaCO_3$ granules.

b. Reactor Sodium Samples

Sodium grab samples from the upper plenum of the reactor can be taken only when the reactor is shut down and the control rod carriage is removed.

In preparation for taking such a sodium sample, the building crane is used to remove a spare reactor shield plug from the storage cells. After attaching a hanger rod and sodium sampler to the plug, the assembly is returned to the storage cell. The fuel handling machine transports the sampling assembly to the reactor where a shield plug is removed and the sampler lowered into the sodium pool. The sampler is then raised into the fuel handling machine and the reactor plug replaced. The sampler is transported to a storage cell by the fuel handling machine where it cools and decays radioactively. When the sample is ready for packaging, the building crane removes the sampler assembly from storage and the sample is prepared for shipment in the same manner as the carbon trap sampler.

c. Reactor Cover Gas Samples

Helium cover gas samples are obtained by flowing the gas through the 1-liter sample cylinder for a period of approximately 5 min. The sample bottle is installed in a bypass line around the cover gas monitor which is valved out during the sampling period. The sample bottle and the bypass line are evacuated prior to bypassing the monitor. It is planned to continue taking gas samples periodically during the first year of operation.

d. Fuel Cladding Samples

As part of the fuel examination program, selected fuel elements which have been given preirradiation examinations will be removed from the reactor at intervals. Fuel rods will be shipped to the Components Development Hot Cell for destructive examination. Tabs for metallurgical study and chemical analysis will be cut from the stainless steel cladding.

4. Analytical Methods

a. Sodium Samples

(1) Metallurgical Test

Indirect metallurgical analysis for carbon in sodium consists of exposing a weighed 3/8 by 5/8 by 0.060-in.-Type 304 stainless steel tab to a 50-g sodium sample at 1200°F for 100 hr. The tab and sodium sample are sealed in an inert, aluminized stainless steel capsule. Aluminizing of the capsule provides an effective carbon barrier.

The capsule is placed in a furnace, inclined at an angle of 30°, and rotated at 15 rpm during the exposure test. Rotation provides continuous agitation and assures homogeneity of the sodium sample. Temperatures are controlled and recorded throughout the test period.

From relationships that have been determined between carbon content of sodium, case depth, hardness traverses, and chemical analyses of tabs the carburization potential of the sodium is calculated.

Figure 20 is the calibration curve for the standard metallurgical test. This correlation related the mean carbon gain or content of an exposed tab to the carbon content of the sodium. A standard size tab and sodium sample are used.

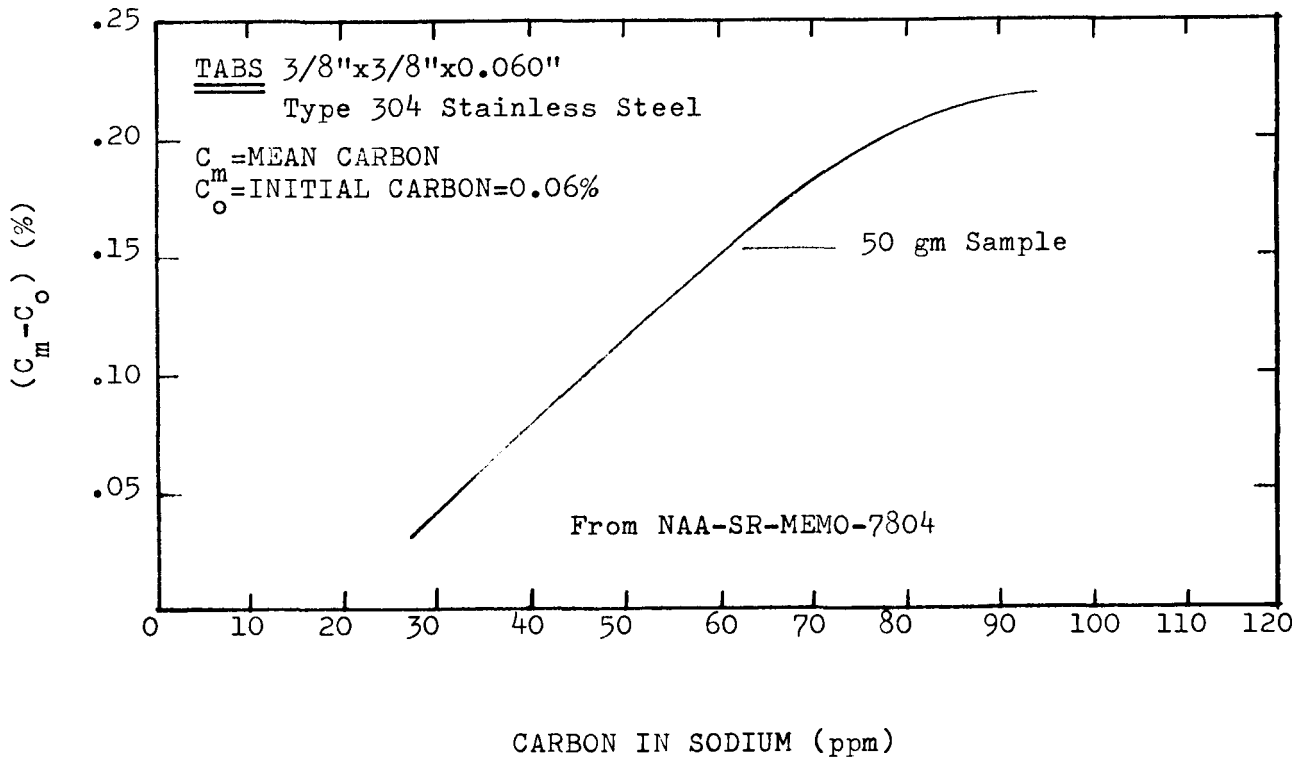

Figure 20. Carburization of Test Tabs in 1200°F Sodium for 100 hr

The carburization potential of the Hallam primary sodium may also be estimated from Figure 21 which correlates the surface carbon content with the effective carbon content of the sodium. This curve is applicable to tabs removed from the carbon trap sampler.

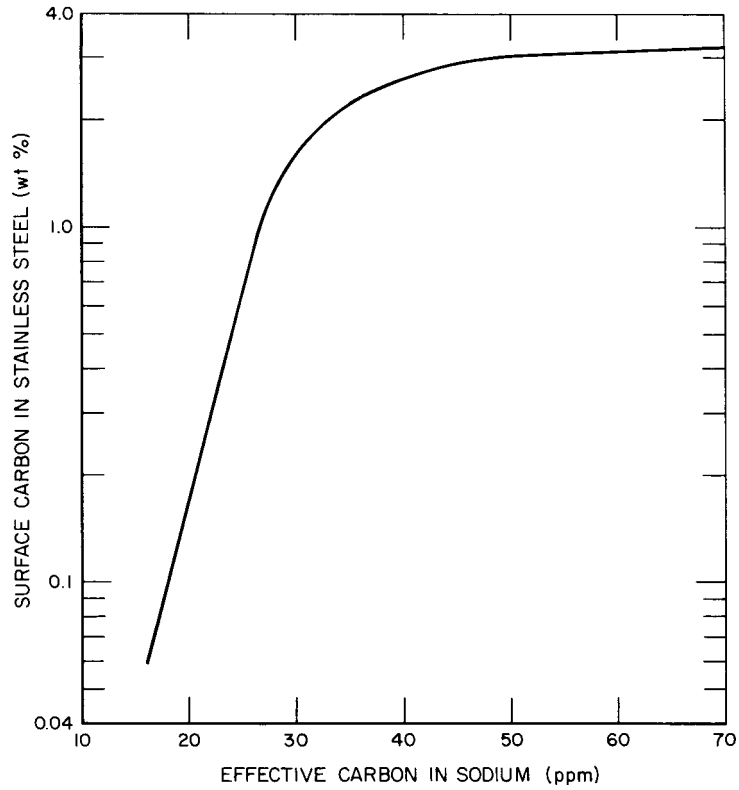

Figure 21. Carburization Potential of Sodium at 1200°F

(2) Chemical Analyses

Sodium samples are analyzed by two wet chemical methods at the AI laboratory.

The Pepkowitz* method is capable of detecting only elemental carbon in sodium. Carbon combined in acetylenic, methanic, or carbonate forms is not detected.

Five grams of sodium sample are reacted with water. The solution is then acidified with sulfuric acid and heated to drive off the CO_2. Heating is continued to concentrate the solution until almost all of the water has been evaporated. The reaction vessel is then connected to a gas train, Van Slyke reagent is added and the flask and gas train are purged with dried and purified oxygen. The CO_2 from the oxidation of carbon is carried by the oxygen to a cold trap where the CO_2 is frozen out.

*Pepkowitz and Porter, Analytical Chemistry, p 1606; February 28, 1956.

The system is then evacuated. A McLeod gage is used to measure the pressure of the CO_2 gas when the cold trap is heated. A reagent blank correction is either built into the McLeod gage calibration curve established by oxidizing known amounts of carbon or it may be determined separately.

A variation of the Pepkowitz method is also used for carbon analysis. After the CO_2 is driven off by acidifying and heating a known weight of C^{13} is added. The weight of the C^{13} spike will vary with the sample size, expected range of carbon content, and the degree of enrichment of the C^{13} spike. The solution is concentrated to approximate dryness, Van Slyke reagent is added, and the CO_2 is swept by pure, dry, oxygen into a vial where it is frozen out. Gas from the heated vial is admitted to a mass spectrometer where the C^{13}/C^{12} ratio is determined. From the initial and final ratios and from the weight of the spike the carbon content of the sodium is calculated.

b. Stainless Steel Tabs

Stainless steel tabs removed from the carbon trap sampler or exposed to a sodium sample in the metallurgical test are subjected to metallurgical examination and chemical analysis.

Exposed tabs are mounted in plastic for the metallurgical examinations. The edge of the tab is polished, etched, and subjected to a Knoop microhardness traverse in the direction of carbon diffusion. The hardness traverse is capable of detecting the depth corresponding to 0.19% carbon.

The metallographic examination establishes the depth at which the carbon content is 0.31%. This represents the limit of visual examination for etched case depth.

Wet chemical analysis of part of the exposed tab for total carbon content is also obtained.

From the measured depths of carburization and the time and temperature of exposure, the surface carbon content can be calculated.*

c. Reactor Cover Gas

One-liter samples of the reactor cover gas are analyzed by gas chromatography. A Beckman Model 2A gas chromatograph and recorder is

*NAA-SR-5282, "Carburization of Austenitic Stainless Steel in Liquid Sodium," W. J. Anderson and G. V. Sneesby, September 1, 1960.

available at AI for these analyses. If correlation can be obtained between these gas analyses and chemical and metallurgical analyses of the sodium carbon content, the gas analyses method promises a rapid method for detecting carbon contamination of the sodium.

5. Analytical Results

A summary of the sodium sample analyses for carbon is given in Table VI. Sodium carbon contents estimated from metallurgical testing of stainless steel tabs exposed to the sodium are referred to as metallurgical. Chemical analyses of sodium for carbon are called wet chemical.

The results of the two methods of determining the carbon content of the primary sodium do not show satisfactory agreement. A plot of these data indicates that, based on the results of metallurgical testing of sodium samples, a reduction in the carbon content evidently occurred in October followed by a rise to the present level. Chemical analyses exhibit considerable scatter, generally favoring relatively low carbon contents in the range of 10 to 19 ppm carbon.

Two sets of stainless steel test tabs have been removed from the carbon trap. The first, Sample No. 10 (Table VI), was involved in a sodium fire. Less than 0.2% surface carbon was estimated from chemical and metallurgical examination of the three thicknesses of steel tabs removed from the sampler.

Table VII contains the results of the examination and metallurgical testing of the sodium sample and tabs removed from the carbon trap January 31, 1963, Sample No. 12. The metallurgical test performed on duplicate steel and sodium samples (Tabs A and B), shows a higher level of carburization potential than do the stainless steel tabs exposed during the carbon trapping run. The maximum carburization potential estimated from examination of the test tabs is 21 ppm or 0.25 wt % surface carbon; this result was for the 0.032 in. test tab. Surface carbon contents varying from 0.06 to 0.09% carbon were found for the 0.010 and 0.060-in. tabs.

These results are similar to those experienced by the SRE (NAA-SR-MEMO-7804), where it was found that carbon analyses of sodium by chemical and metallurgical methods could not be correlated with the results of test tabs removed from the carbon trap. Examination of test tabs removed from the carbon trap appears to be the most satisfactory method for monitoring the carburization potential of the primary sodium in the Hallam reactor.

TABLE VI

SUMMARY OF SODIUM SAMPLE ANALYSES

Sample Number	Date of Sample	Carbon (ppm)	Type Analysis	Performed By	Remarks
1*	7-10-61	9	Wet chemical	USI	New sodium
2*	7-13-61	14	Wet chemical	Truesdail	New sodium
3	6-15-62	47	Wet chemical	AI	From C-trap
4	6-22-62	39	Wet chemical	AI	From core
5	8-15-62	54	Metallurgical	AI	From core
5	8-15-62	15	Wet chemical	AI	From core
6	9-16-62	41	Wet chemical	AI	From core
7	10-8-62	29	Metallurgical	AI	From core
7	10-8-62	10	Wet chemical	AI	From core
8	10-11-62	23	Metallurgical	AI	From core
8	10-11-62	18	Wet chemical	AI	From core
9†	12-10-62	16	Wet chemical	USI	New sodium (drums)
10§	12-26-62	0.2 wt % surface carbon	Metallurgical	AI	Carbon trap Stainless steel tabs
11**	12-28-62	29	Metallurgical	AI	From core
11	12-28-62	19	Wet chemical	AI	From core
12††	1-31-63	35	Metallurgical	AI	From C-trap
12	1-31-63	21	Metallurgical	AI	Carbon trap tabs
12	1-31-63	7	Wet chemical	AI	From C-trap

*New sodium before shipment to site.

†New sodium sent to site in drums for secondary system makeup.

§This sample was involved in a sodium fire and the sodium was lost. The analysis was of the stainless steel tabs in the sampler, resulting in no visible carburization; between 0.03% and 0.07% carbon by bulk (dissolved tab) chemical analyses, which corresponds to less than 0.2 wt % surface carbon.

**Taken after about 170 hr carbon trap operation, a total carbon trap flow-through of about 300,000 gal.

††Taken after about 130 hr additional carbon trap operation, an additional carbon trap flow-through of about 230,000 gal.

TABLE VII

CHEMICAL AND METALLURGICAL EXAMINATION OF SAMPLE 12 TABS

Tab	Method of Analysis	Depth (C_m)	% C_m *	% C_s †	Carbon (ppm)
A§	Case	0.0027	0.09	0.45	27
	300 Khn	0.009	0.15	1.14	45
	Chemical	-	0.13	-	39
B§	Case	0.0016	0.085	0.39	26
	300 Khn	0.007	0.11	0.63	33
	Chemical	-	0.13	-	39
0.010 in.**	Surface	-	-	0.06	18
	Chemical	-	0.07, 0.08	0.09	18
0.032 in.**	Surface	-	-	0.25	21
	Chemical	-	0.08, 0.03	0.20	21
0.060 in.**	Surface	-	-	0.06	18
	Chemical	-	0.04, 0.06	0.06	18

*% C_m = mean carbon content of a steel tab
†% C_s = surface carbon content of a steel tab
§Tabs A and B are duplicate tabs exposed to portions of the sodium sample
**Tabs removed from the sodium sampler

A summary of cover gas analyses is given in Table VIII. Air contamination of several of the samples has occurred. No conclusions with respect to the potential value of this method of detecting sodium contamination can be drawn at this time. Sampling will continue for several months of operation at normal sodium temperatures.

TABLE VIII

SUMMARY OF COVER GAS SAMPLE ANALYSES

Sample No.	Date of Sample	Volume %				Remarks
		H_2	O_2 and A	N_2	CO_2	
1	12-11-62	0.011	7.26	33.60	0.021	*
2	1-5-63	0.011	8.72	30.40	0.020	*
3	1-28-63		0.58	2.07		H_2, CO_2 not detected

*Air leakage of the gas chamber is indicated, since O_2 and N_2 occur in about the right ratio.

XI. COMPONENTS RELIABILITY

The purpose of this program is to acquire technical and economic data which can be utilized to improve HNPF plant reliability. Reliability information is obtained directly from operations and maintenance records, and from other phases of the HNPF-ROAP.

The operating history is collected and filed as a part of normal plant operation. This includes operating logs and standard startup, shutdown, and routine operating data sheets and procedures. From these records the actual amount of component operation over a given period of time is obtainable. Maintenance records include a completed "work request" form for each time maintenance is performed on a component. This completed form includes a description of the component deficiency or failure and the work performed to correct it. From each completed "work request" form, information will be transcribed to a components reliability history sheet. (A components reliability history file will be maintained which contains a history sheet for each type component.)

Maintenance records can be combined with the components operating history to indicate components reliability over a period of years. Frequent failures of some components may be caused by underdesigned parts (such as a pump bearing), or by misapplication. Other components may prove to be overdesigned. This information, while indicating weak components and system limitations at the HNPF, will also help optimize component design and set more realistic operating limits for future plants.

Also, when a component failure causes, or could potentially cause, a decrease in plant availability, a "Malfunction, Operation and Removal Report" will be completed (Figure 22). An accumulation of these completed reports will be used in conjunction with a digital computer to determine reliability statistics. It will be possible to rapidly sort the data by one category, or by several categories simultaneously.

ATOMICS INTERNATIONAL
A DIVISION OF NORTH AMERICAN AVIATION, INC.

MALFUNCTION, OPERATION AND REMOVAL REPORT

REPORT NO. 10253

1. TYPE REPORT A ☐ Malfunction B ☐ Operation C ☐ Removal	2. IDENTIFICATION CODE	3. LOCATION CODE	4. RA	5. INITIAL REPORT NO.

6. MAJOR SYSTEM	7. MAJOR SYSTEM S/N	8. MAJOR SUBSYSTEM CODE	9. MAJOR SUBSYSTEM S/N	10. MAJOR SUB-SYSTEM NAME
11. MFR'S MODEL/PART NO.	12. C/L	13. COMPONENT/PART S/N	14. COMPONENT/PART NAME	
15. MFR. NAME	16. MFR. CODE	17. EQUIP./NEXT ASSEMBLY PART NO.	18. EQUIP./NEXT ASSEMBLY S/N	
19. REPLACEMENT MODEL/PART NO.	20. C/L	21. REPLACEMENT S/N	22. REPLACEMENT MFR. NAME	
23. REPL. MFR. CODE	24. OPERATING DATA HOURS MIN. SEC. NO. STARTS NO. CYCLES	25. NO. ITEMS TESTED	26. NO. ITEMS FAILED	
27. MALFUNCTION CODE	28. MALFUNCTION EFFECT SHUTDOWN HOURS LOAD REDUCTION % HOURS	29. MAINT. HOURS	30. DISPOSITION APPROVAL	

31. OPERATION REPORTED OR IN PROGRESS
- ☐ A – Operational usage
- ☐ B – System checkout
- ☐ C – Periodic inspection
- ☐ D – Maintenance
- ☐ E – Development test
- ☐ F – Inspection
- ☐ G – Storage
- ☐ H – Shipping
- ☐ J – Acceptance test
- ☐ K – Qualification test
- ☐ L – Quality verification test
- ☐ M – Reliability test
- ☐ N – Environmental*

*when not a part of any other test

32. PROCEDURE/TEST INSTR. NO.

33. APPARENT CAUSE
- ☐ A – Not operated/tested per spec.
- ☐ B – Installation
- ☐ C – Fabrication
- ☐ D – Design
- ☐ E – Test to failure
- ☐ F – Unknown
- ☐ G – No malfunction

34. TYPE OF MANFUNCTION
- ☐ A – Primary only
- ☐ B – Primary causing secondary
- ☐ C – Secondary

35. DATE OF OCCURRENCE
MONTH DAY YEAR

36. INITIAL DISPOSITION
- ☐ A – Used as is
- ☐ B – Adjusted
- ☐ C – Repaired in place
- ☐ D – Repaired/Reinstalled
- ☐ E – Held for repair
- ☐ F – Held for analysis
- ☐ G – Sent to repair activity
- ☐ H – Sent to mfr.
- ☐ J – Condemned
- ☐ K – Eliminated

37. SEVERITY
☐ Critical ☐ Non-Critical

38. WORK REQUEST NO.

39. PART SENT TO

40. REPORT SUBMITTED BY

41. PURCHASE ORDER NO.

42. NARRATIVE DESCRIPTION AND ENVIRONMENTAL DETAILS

	1–35	36–70
1		
2		
3		
4		
5		
6		
7		

43. ANALYSIS
- ☐ A – Not required
- ☐ B – Required and assigned to

44. AUTHORIZATION FOR ANALYSIS

45. ANALYSIS PERFORMED
☐ Yes By _____

46. ANALYSIS REPORT NUMBER

47. FINAL DISPOSITION
- ☐ A – Found serviceable
- ☐ B – Repaired in field
- ☐ C – Repaired in depot
- ☐ D – Repaired by Mfn.
- ☐ E – Destroyed at analysis
- ☐ F – Condemned/Scrap

48. FINAL DISPOSITION VERIFICATION

49. PARTS REPLACED DURING REPAIR

QUANTITY	PART NUMBER	REFERENCE DESIGNATION	FAILURE CODE

50. REMARKS AND REFERENCE DOCUMENTS

Figure 22. Malfunction, Operation, and Removal Report Form

XII. FLUID SYSTEMS PERFORMANCE ANALYSES

HNPF-ROAP analytical methods for these systems have not been completed. A major part of these analyses will be accomplished as a part of the Components Reliability Program, Section XI. Following is presented a summary of the performance history to date for each system.

A. RADIOACTIVE LIQUID WASTE SYSTEM

1. System Description (Figure 23)

The radioactive liquid waste system is designed to collect, segregate, monitor, and store all liquid waste that could be active, and to dispose of low level liquid waste. In the event high level liquid waste should be generated, it will be stored while disposal facilities are constructed.

Shielded facilities are provided in the main reactor building to steam clean fuel elements and other components safely, and to collect the liquid waste from this process in a 1200-gal transfer tank. Other liquid wastes from the plant are segregated and monitored in three sets of monitoring tanks. The laundry waste effluent will be of an activity level that will permit direct disposal to the leach field after monitoring. A cross-connection will be provided to allow this laundry waste to be pumped to the storage tanks should it become contaminated above permissible levels due to some unforeseen condition.

Clothing will not be laundered if it is of an activity level that would raise the wash water above levels permissible for leach field disposal. All other wastes will be pumped to storage tanks in the waste disposal facility after sampling. Transfer of all wastes to the waste disposal facility is effected by steam jet ejectors to minimize possibility of leakage, and to minimize maintenance requirements.

The liquid waste disposal facility contains the following major equipment, together with all interconnecting piping, valves, controls, etc. to permit storage of all aqueous liquid waste, and to permit ultimate disposal of low level liquid waste:

a) One 1000-gal stainless steel high-level liquid waste tank

b) Two 5000-gal low-and intermediate-level liquid waste tanks

c) One 25-gpm transfer pump

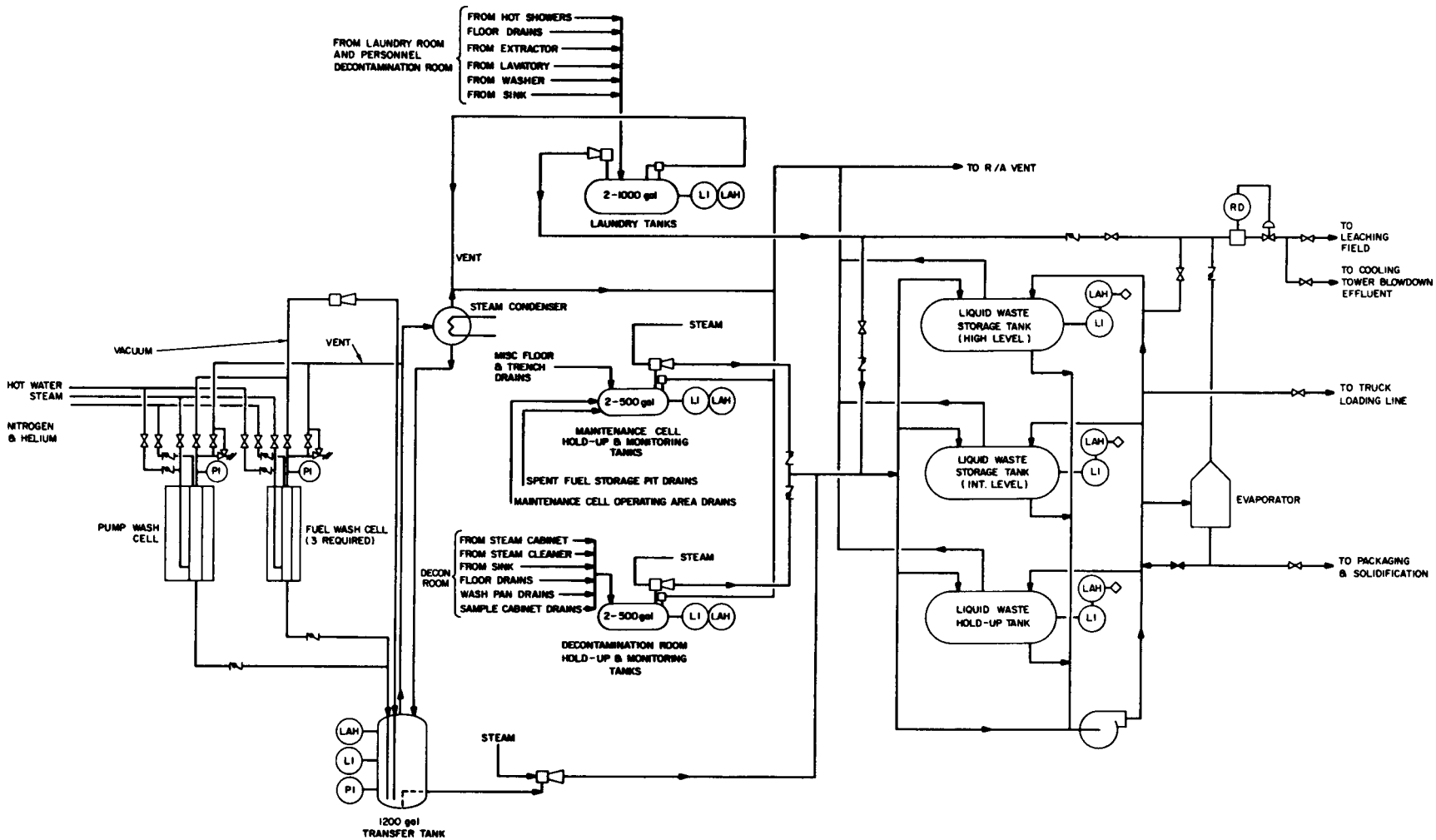

Figure 23. Radioactive Liquid Waste System

d) One low capacity, positive displacement pump for metered flow to the leach field

e) One 5-gph evaporator for low-level waste

f) A pipeline monitor and automatic valve for shutting off flow if waste of excessive activity level is inadvertently pumped.

The tanks, pumps, and piping are installed in sealed, below-grade, shielded vaults. These vaults serve as personnel protection, and as secondary containment in the remote event of an inadvertent spill or leak, thus minimizing the possibility of ground contamination.

2. Performance History

The radioactive liquid waste system has been preoperationally tested. The few minor problems which were encountered were easily resolved, as follows.

a) Some floor drains had to be unplugged.

b) The liquid waste evaporator drain valve was found to be limited in pressure, so that the full pressure capacity of the evaporator could not be used.

c) In order to obtain satisfactory performance from the jet ejector pumps, the auxiliary steam pressure had to be raised from 110 to 125 psig.

Since the preoperational test was completed, the radioactive liquid waste system has been used as needed and has performed satisfactorily.

B. RADIOACTIVE VENT SYSTEM

1. System Description (Figure 24)

The radioactive vent system controls the disposal of any potentially radioactive gas. The gases handled by the radioactive vent system fall into two main groups: gases which are normally radioactive, and gases which are normally not but could become radioactive. The normally radioactive gases come from the reactor and the primary fill tanks. These gases flow through pressure controllers into the vent suction tank in the radioactive waste building. From here they are pumped into the decay tanks for storage and controlled disposal. The gases which are not normally radioactive flow through a radiation detector which directs

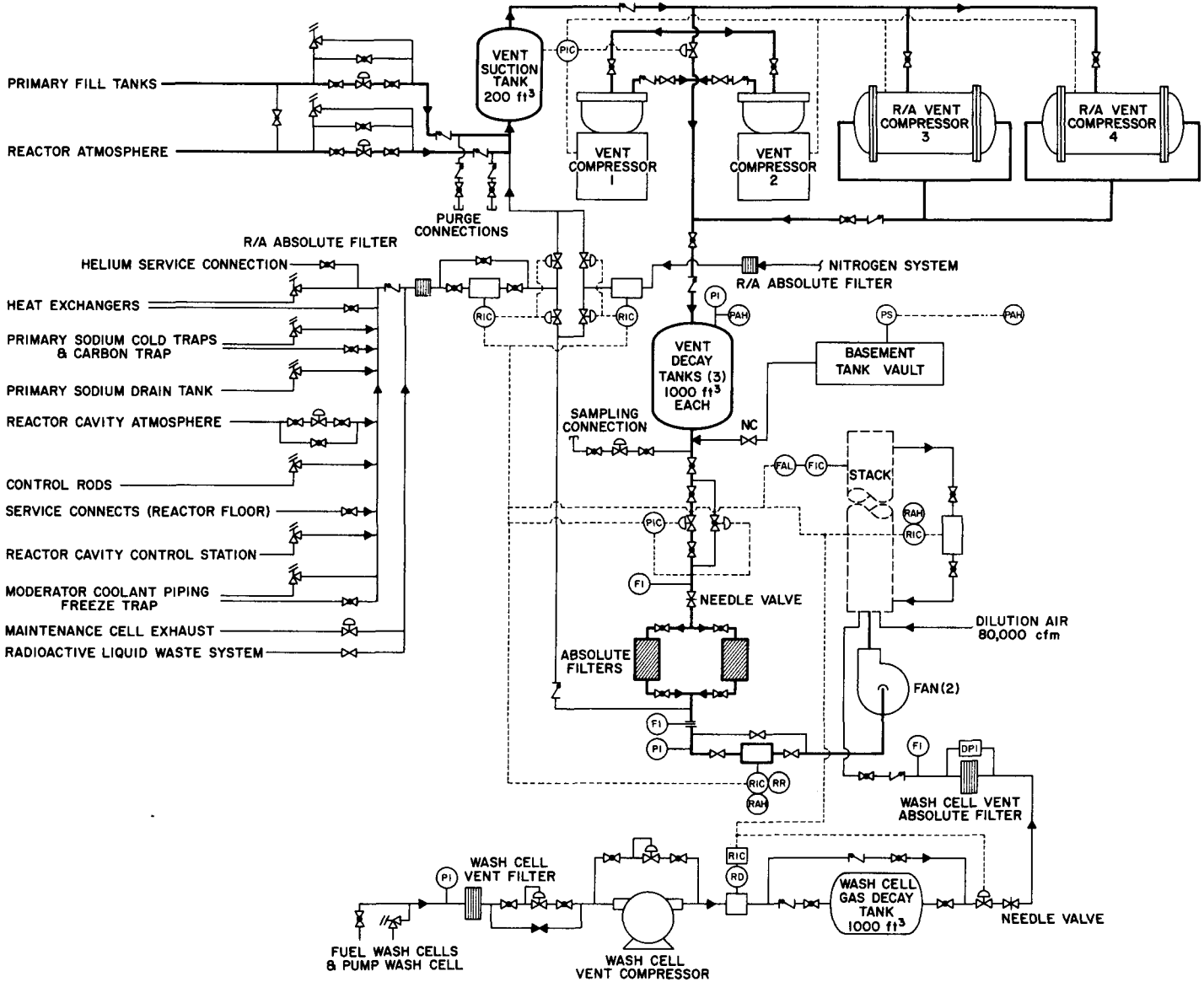

Figure 24. Radioactive Vent System

them to a bypass line directly to the plant ventilation stack if the activity level is below 10^{-3} $\mu c/cm^3$; or through the vent suction tank and the compressors to the radioactive gas decay tanks if above 10^{-3} $\mu c/cm^3$.

The radioactive gas disposal system is installed in the radioactive waste building and consists of the following major equipment, together with all interconnecting piping, valving, instruments, and controls to permit storage of the gas until decay has taken place, followed by controlled release to the main ventilation stack:

a) One radioactive gas compressor suction tank

b) Two 50-scfm compressors for purge operation

c) Two 4-scfm "canned" compressors for normal outleakage and breathing losses

d) One 2-scfm radioactive gas compressor for hydrogen-bearing radioactive gas

e) Four 100-scf, 150-psi gas storage and decay tanks.

Each of the two compressors, No. 1 and 2, can pump gas at a rate of 50 scfm, which is sufficient to handle the maximum gas flow caused either by increasing the sodium system temperature at a maximum rate of 50°F/hr or by filling the sodium system at approximately 100 gpm. Two compressors are provided in the system to ensure continued operation if one compressor should have to be removed from service for maintenance. The compressors are turned on and off by a pressure controller on the suction tank. In addition, two small canned compressors, No. 3 and 4, rated at 4 scfm each, handle small flows due to inleakage, etc. During off cycles, the two large compressors are automatically valved out of the system to minimize inleakage.

The three main decay tanks have a volume of 100 ft^3 each and can be pressurized to 150 psig. These tanks are installed in shielded, gas-tight, pressure-containing vaults below grade. Thus, even in the remote case of a tank rupture, large quantities of active gas would not be released in the building. Radioactive gases are held in those tanks until the activity level has decreased

sufficiently so that the gases can be released to the reactor-building ventilation stack. During the decay period, the gases in the tanks are sampled and the decay pattern is charted. When optimum decay has been achieved, the gases are released to the reactor-building stack at a predetermined rate to assure proper dilution. Total flow through this stack is approximately 80,000 scfm. Accurate pressure controllers, needle valves, and flow meters are provided to permit accurate release rates from 1 to 50 scfm from the decay tanks for dilution with the stack gases and release to the atmosphere.

The effluent gases are checked for radioactivity on the outlet side of the high-efficiency filters. If the activity should exceed $10^{-3} \mu c/cm^3$, solenoid-pilot operated valves are automatically closed in the lines from the decay tanks, the normally nonradioactive components, and the nitrogen system, thus stopping all release of potentially active gas. Two vent fans of 100 cfm capacity each, one operating and one standby, are provided to introduce the effluent gases into the reactor building stack.

As a final backup control, the reactor building stack gas is continuously checked for radioactivity level. If the activity of the stack gas should increase to a set upper limit, $10^{-5} \mu c/cm^3$, the detector-controller will sound an alarm and automatically close the valves on all radioactive vent lines leading to the stack, completely shutting off the radioactive vent system from the stack. The vents will also be shut off in the event of low dilution air flow.

The decay tanks are sized to handle normally radioactive effluent gases and also to contain the gas used to purge the reactor atmosphere before and after primary sodium draining. The reactor can be purged by connecting the fuel handling machine to the top shield, removing the shield plug at that position, and blowing helium from the machine, through the reactor, to the radioactive vent system. It can also be purged by bypassing the reactor atmosphere control valve. It is estimated that three purges of the core atmosphere before draining the sodium, and one purge of the primary sodium system gas space after the draining, will meet the normal reactor purge requirements. The radioactive vent system is adequate to accommodate several times this amount of purge.

Because of the generation of hydrogen from the reaction of sodium and water, the fuel wash cells are provided with a separate gas-tight radioactive vent system, to prevent any possible formation of a hydrogen-oxygen mixture

except in the stack itself. The gas produced in the wash cells is either vented directly to the reactor-building stack, if below 10^{-3} $\mu c/cm^3$, or automatically sent to a 1000-ft^3 storage tank for radioactivity decay. The 20-cfm compressor furnished with this system has a wet-seal, which minimizes the possibility of sparks forming in the compressor. The wet-seal is backed by a triple mechanical seal, which eliminates any leakage in the compressor. To further prevent oxygen from getting into the system, all pipe connections are welded and a check valve, purposely undersized to maintain high flow velocities, is installed in the line to prevent backflow of oxygen from the stack into the hydrogen-bearing vent gas. Flow to the reactor-building stack is regulated so that, in the event of sparking or fire, the blaze will be cooled and extinguished without damage by the 80,000-scfm stack gas flow.

The building ventilation air from the waste disposal building is exhausted through a small stack on the building. Under all foreseeable conditions, the waste building atmosphere should be free of airborne contamination. However, in the remote event of a spill or leak, a radiation monitor in this stack would sound an alarm. An indicator visible from the outside would read actual level of activity in the stack, giving an indication of the extent of contamination.

2. Performance History

The radioactive vent system was preoperationally tested to assure operational readiness of the vent compressors and all associated controls and equipment for both the wet gas and the dry gas radioactive vent system.

After preoperational testing was completed, the vent system was placed into operation, and has seen almost continuous service.

One problem was encountered during operation of the vent system, in that water was discovered in the vent header. This discovery came about when the pressure drop across the main vent system filter was noted to be above limits, and the filter was opened and found to be plugged with water. An extensive investigation was then conducted to determine how the water got into the main vent system header. This investigation disclosed that the most probable route of entry was through the vent from the maintenance cell holdup and monitoring tank. When water was drained from the No. 3 spent fuel storage pit into the maintenance cell holdup and monitoring tank, the tank was overfilled. Water

then backed up through a partially opened valve and through a moisture trap into the maintenance cell holdup and monitoring tank vent header; and, from there, into the main vent header.

After the water was removed from the vent system, several modifications to it were made to prevent reoccurrence of the incident.

a) The vent lines from all water-bearing tanks were re-routed so that they now go directly to the suction tank, thus separating the potentially water-bearing vent lines from the sodium vent lines.

b) Drain traps were installed in the nonradioactive and radioactive vent headers to prevent liquid water from backing through these headers to the sodium vent junctions.

c) An alarm was installed to detect the presence of moisture in the suction tank.

C. NITROGEN SYSTEM

1. System Description (Figure 25)

The primary function of the nitrogen system is to maintain an inert gas atmosphere in the pipe and heat exchanger cells, the cold-trap cells, the primary fill tank cell, the moderator coolant pump cells, the maintenance cell, and the primary service pump cell. Nitrogen is also used as the coolant for the freeze seals of the valves, as well as the coolant for the primary cold-trap and plugging meter assemblies. During the sodium filling operation, nitrogen is used to maintain an inert atmosphere in the sodium tank car. Nitrogen serves as emergency backup for the instrument air supply.

The nitrogen system consists of a liquid nitrogen storage tank, an evaporator and pressure control unit, a low-pressure storage tank, and a vent controller to divert effluent flow from the equipment cells to either the building vent stack, if below $10^{-3} \mu c/cm^3$, or to the radioactive vent storage system, if above that level. Each nitrogen-filled cell served has an outlet and an inlet pressure control valve, operating from a single control point, for maintaining a slight positive nitrogen pressure. A radioactive dust (particulate) filter is provided to filter effluent gases from all cells. Liquid nitrogen is brought to the plant in trailers of 20,000 to 40,000-scf capacity each. (Liquid or gaseous nitrogen can be supplied to the nitrogen system.) The supply manifold consists of two

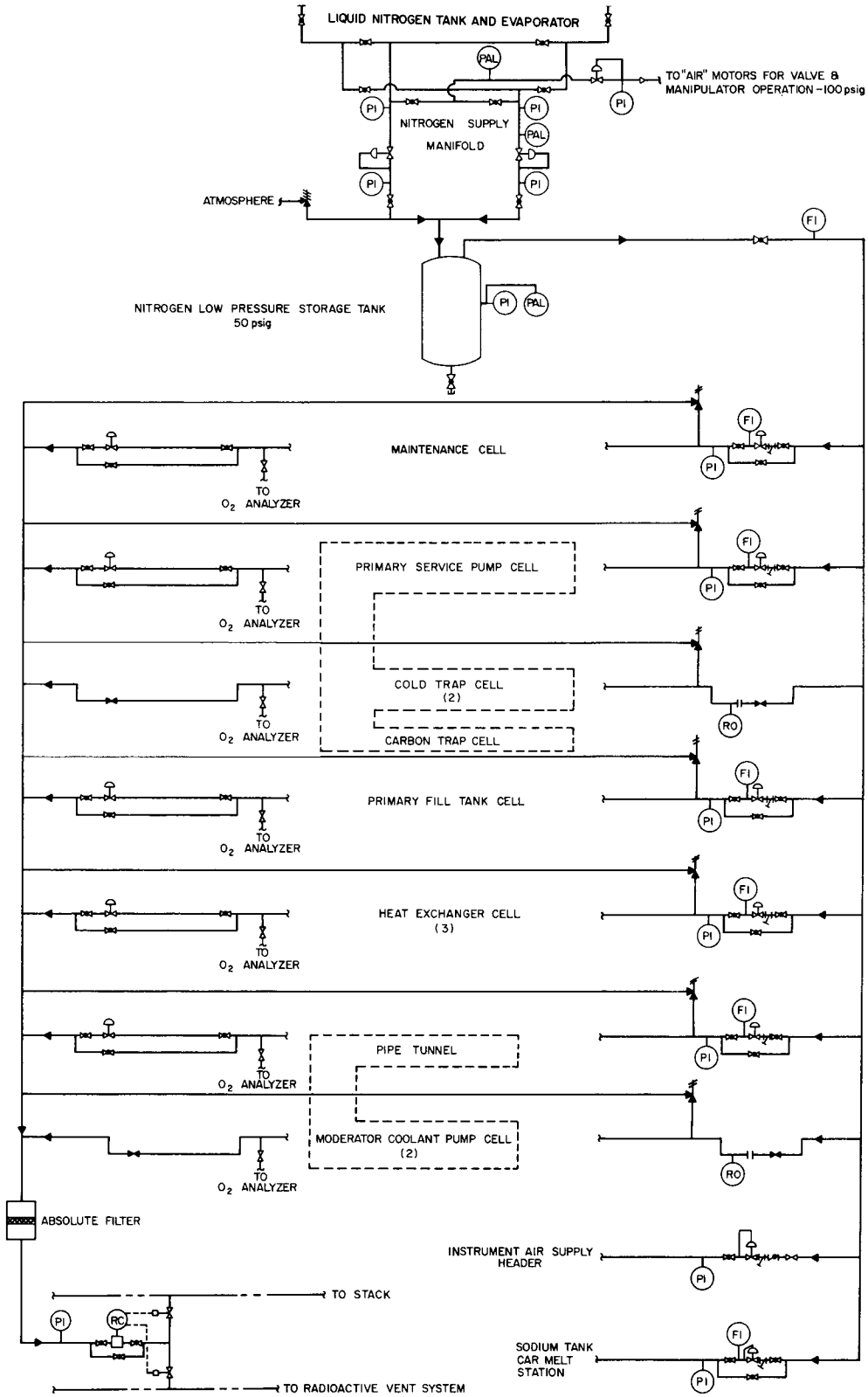

Figure 25. Nitrogen System

parallel pressure regulators and a valve arrangement for routing the gas through both regulators in parallel or through either pressure regulator singly or in cascade. One pressure regulator reduces the nitrogen pressure to 50 psig. When downstream pressure drops below 45 psig, the second regulator also feeds the system. A low-pressure alarm indicates that this action is taking place.

The nitrogen passes from the supply manifold to the 100-ft^3 storage tank and from there to the headers which lead to the various cell inlet pressure regulators. The inlet pressure regulators are set at 1-in. H_2O; the back-pressure regulators are set at 6-in. H_2O. This pressure range is sufficient to maintain a positive nitrogen atmosphere and yet is not large enough to aggravate a leak or cause stress problems in the steel liners of the cells.

Relief valves in the cell inlet lines open at 2 psig. The nitrogen atmosphere in each cell is recirculated through an individual water-cooled heat exchanger to maintain the desired temperature in the cell. The cells and primary pipe tunnel have 100% spare cooling equipment units to provide continuous cooling in case of an equipment failure. As the nitrogen is recirculated, it is monitored for radioactivity. High-temperature alarms installed in each cell will signal if a cooling system malfunctions or if a sodium spill occurs.

Sampling lines from the cell outlet lines are manifolded to a local, board-mounted oxygen analyzer. The manifold valves are so arranged that the cell atmospheres can be monitored collectively or individually. Cells will be monitored individually and sequentially to assure that oxygen content of the nitrogen gas will be less than 1%.

A radiation-sensitive vent controller monitors all effluent gases at the system outlet. By operating either of two valves, it automatically directs the gas flow through the normal plant exhaust system to the atmosphere, or, in the event of high activity, to the radioactive vent system.

In each cell, both the inlet and outlet pressure regulators have bypass lines which are used during purging operations. The purge rate is controlled by orifices in the bypass lines that limit the purge flow to flow capacity of the relief valve. An oxygen analyzer is used to indicate the effectiveness of the purge.

During each reactor startup, after the cells are purged and brought to pressure, the back-pressure regulators control the nitrogen bleed-off in order

to maintain constant pressures as the cells heat up. After a reactor shutdown, the inlet pressure regulators maintain constant pressures as the cells cool down. The pressure-regulating requirements during both heating-up and cooling-down periods are based on a maximum cell temperature rate of change of 15°F/hr.

2. Performance History

A preoperational test was performed on the nitrogen system to prepare it for operation, and to determine that the system and related system components function according to design specifications. The nitrogen system, with the exception of the nitrogen filled cells, was purged and filled with nitrogen. The primary sodium equipment cells were purged and filled with nitrogen as a part of this test.

When the nitrogen supply manifold was first put into service, its operation was found to be unsatisfactory at the 125 psig provided by the liquid nitrogen evaporator-vaporizer unit which had been installed. In general, pressure control valves and relief valves did not operate satisfactorily and required extensive maintenance to ensure working order.

As a result of these findings, the nitrogen supply manifold was modified. First the vaporizer outlet pressure was reduced from 125 to 100 psig, so that the pressure control valve on the 100-lb portion of the nitrogen system could be eliminated. Then the two original parallel pressure reducing stations were replaced by a single unit and a bypass line and valve. Then low pressure alarm units that would reset within a few psig were installed in place of the original unsatisfactory units.

The nitrogen supply manifold was then retested and found to conform to specifications.

Primary sodium equipment cell relief valve tests disclosed that of 16 valves in the system, 14 did not open at the 2-psig design pressure, nor properly reseat leak-tight at an expected 1.5-psig pressure. Raising or lowering the valve spring adjustment screw corrected the relief opening pressure. However, it was necessary to install new diaphragms and seating discs in 5 valves to ensure leak-tightness in the reseat position. Inspection of the relief valves prior to reworking them disclosed no indication of the reason for malfunction. However, the relief valves functioned properly after the new diaphragms and seating

discs were installed. The cause for malfunction could have been either foreign matter between the disc and the valve seat, or minute flaws in the diaphragm, or both.

Since the preoperational test was completed, the nitrogen system has been in use constantly for establishing and maintaining inert atmospheres where needed. Some efficiency losses were experienced due to icing during periods of high usage in colder months, but this was alleviated by installing a separate set of vaporizer coils in the liquid supply system.

D. LOADING FACE SHIELD COOLING SYSTEM

1. System Description (Figure 26)

The loading face shield cooling system is a completely enclosed and isolated system, circulating nitrogen at approximately 235 psig. The system contains two cooling compressors in parallel, one operating and one spare. A snubber provides a sensing point for the system pressure, including low- and high-pressure alarms, an expansion volume for surges from the compressor, and a small amount of system volume play for minor temperature variations. From the snubber, the nitrogen passes through the tube side of one of two parallel nitrogen coolers, where the temperature is reduced to 95°F by water from the auxiliary cooling tower. The cooled nitrogen passes from the heat exchanger through the various coils of the loading face shield, where the heat from the bottom side of the loading face shield is absorbed by the nitrogen. Coils are 1-1/2-in. OD by 0.120-in. wall in the loading face and 3/4-in. OD by 0.065-in. wall in the moderator removal plugs. The coils within the loading face shield are of all-welded construction and are suitable for approximately 2350 psig working pressure at the anticipated temperature. These coils have been hydrostatically tested at 350 psig. From the loading face shield coils, the warm nitrogen is returned to the compressors to be recirculated. Makeup supply to the system is limited to one bottle feeding through pressure control equipment.

Pursuant to the philosophy of 100% standby equipment for critical items, two compressors and two heat exchangers are provided for the loading face shield coolant, each of which is capable of accommodating the full thermal load. This equipment is arranged for manual transfer on the basis that sufficient time will be available to make the transfer. Nitrogen at 235 psig was chosen as the coolant, since it was the most desirable coolant available with the following required properties:

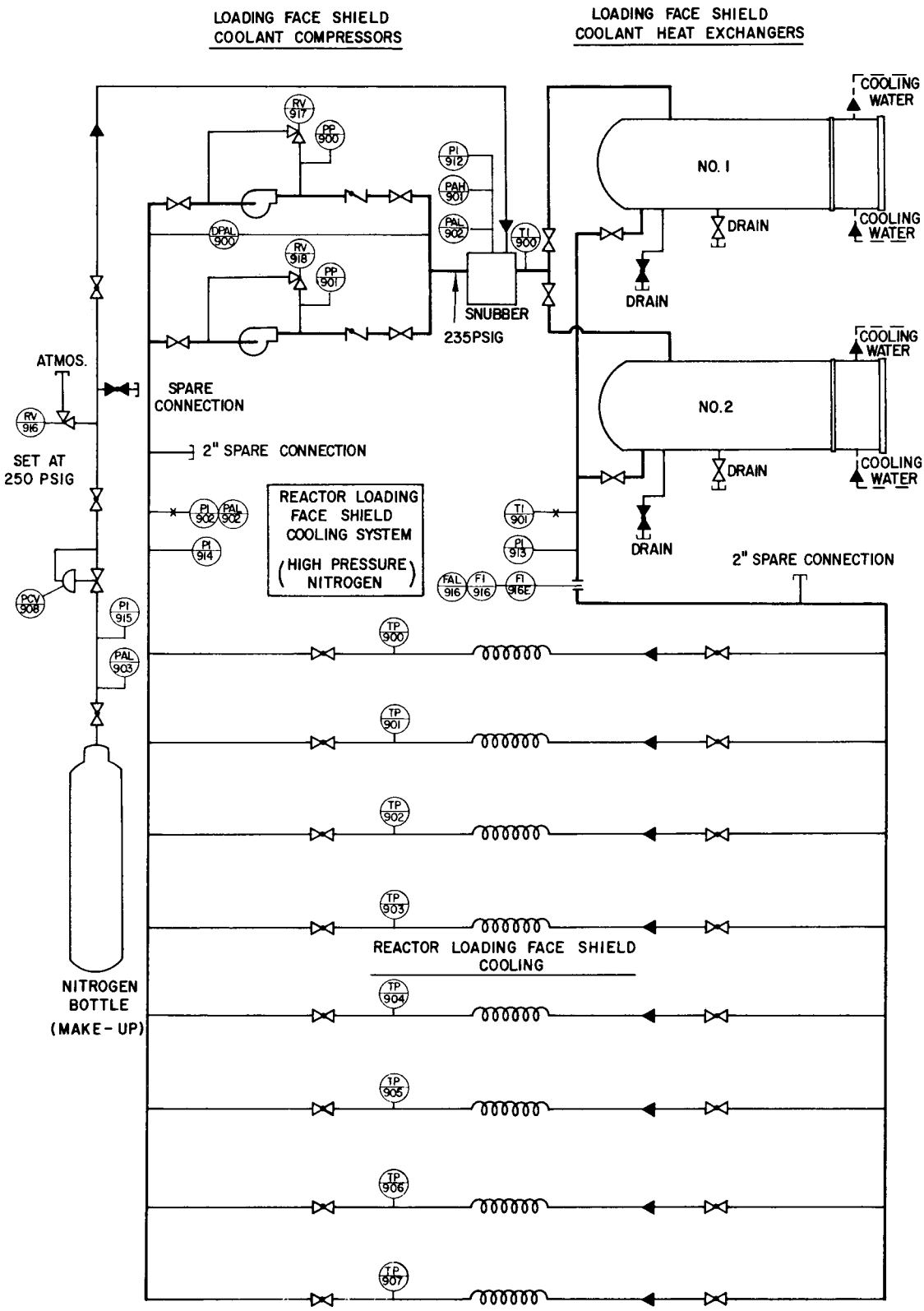

Figure 26. Loading Face Shield Cooling System

a) Nonreactive with sodium, air, or water

b) Nontoxic

c) Noncorrosive

d) Not subject to radiation damage or extensive activation.

The elevated pressure is required to provide adequate cooling in the limited space available for coolant flow.

2. Performance History

The loading face shield cooling system has been subjected to a preoperational test which involved purging and filling the system with nitrogen, and determining that the system would operate satisfactorily. Prior to purging and filling the system, individual cooling coils were pressure tested with service air. During the pressure test, two of the cooling coils were found to leak. The leaks were found to be at loose bulkhead fittings which were inaccessible at the time of test; so these two coils were valved out of the system until the loading face shield cover plate could be removed for accessibility. The fittings were then tightened to correct the leakage problem and the coils were returned to service.

After the loading face shield compressors were placed into service, the compressors were noted to be undersized in that they could not meet the flow and pressure requirements specified in the system design for the predicted heat load. This problem was solved by increasing the valve size and diameter of the compressor piston, thus increasing the compressor efficiency so that no added horsepower was required. System performance has proven this solution effective.

During operation of the loading face shield cooling system excessive piping vibration problems were encountered. A study of the problem was made and supports were mounted on the piping in appropriate places to dampen the vibrations to acceptable amplitudes. Since this minor modification, the loading face shield cooling system has performed satisfactorily.

E. HELIUM SYSTEM

1. System Description (Figure 27)

The helium system maintains an inert gas atmosphere in the reactor and in piping and equipment in contact with sodium. Its principal functions are to

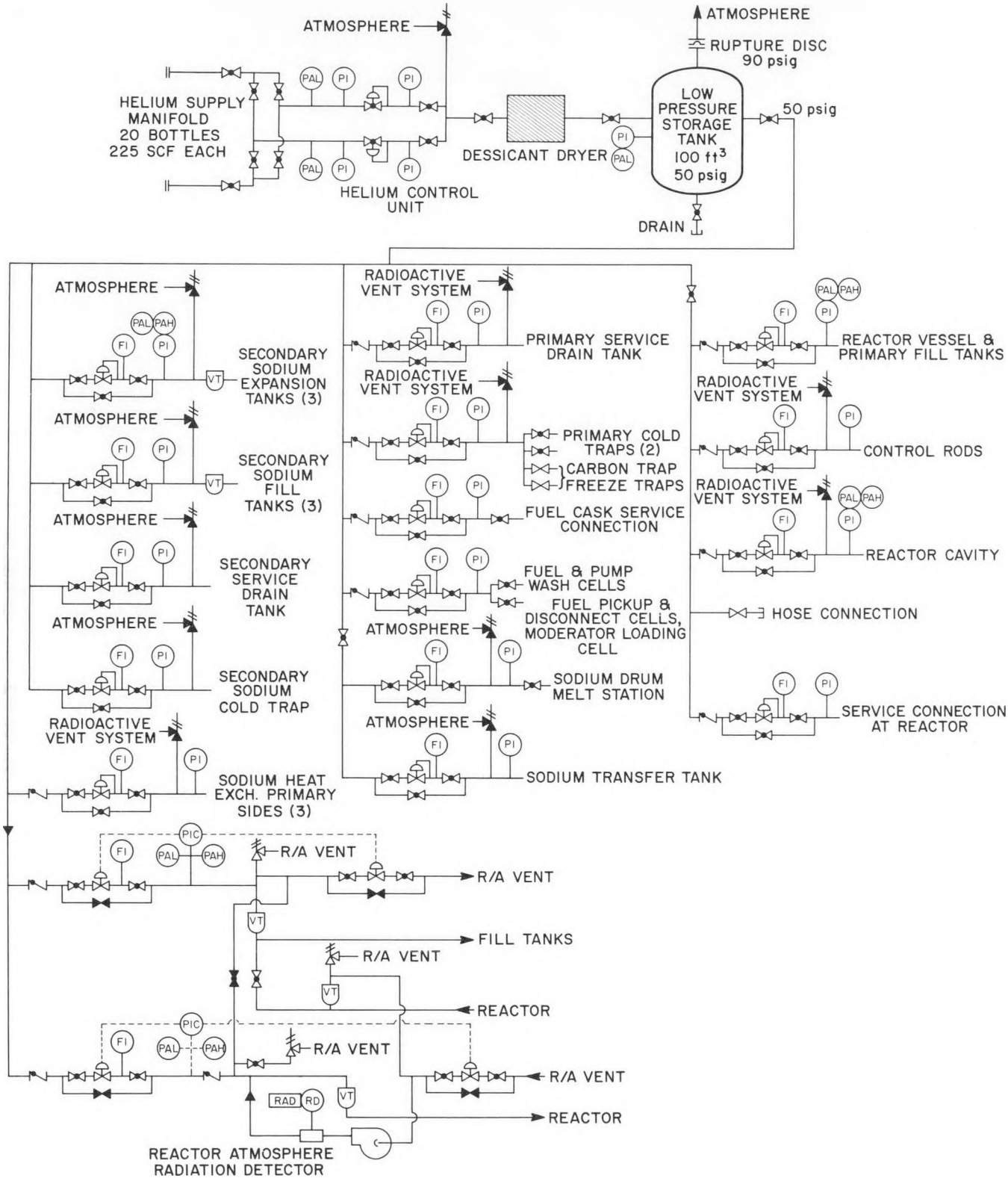

Figure 27. Helium System

maintain constant helium pressures in the piping and equipment which it services and to provide for purging all or part of the system. The system consists of a supply manifold, a pressure control unit, a low-pressure storage tank, and pressure controllers for providing constant helium pressures to the various components.

Helium is supplied by a duplex supply manifold having a bank of ten 225-scf bottles connected to each side. Helium is drawn from one bank at a time. On demand, the control unit for the bank in use reduces the pressure of the helium leaving the manifold to 50 psig and sends the gas to the storage tank. When the pressure from this bank drops to 45 psig, the second controller opens to the other bank. Low-pressure alarms indicate when these actions take place. The manifold valves must be manually changed so that the helium from the second bank is rerouted to the original controller. The empty bottles on the first bank can then be replaced.

The inlet helium pressure regulators in the primary sodium system are set at 1-in. H_2O; the back pressure regulators are maintained at 6-in. H_2O. The secondary system is set at about 20 psig. The helium in the wash cells and in the pickup, disconnect, and moderator loading cells is kept at approximately 0.25 psig by manual control of the operator. The control rod thimbles are maintained at 15 psig, and the high-point freeze traps and secondary fill tanks are maintained at sufficient pressure to allow for transferring and draining of sodium from the secondary loops. Stubbed lines are provided for supplying helium to the main sodium valves and pumps, if desired.

All helium lines which service radioactive systems or components are equipped with check valves to prevent radioactive gas from escaping to the atmosphere in the event of a rupture in a helium supply header. Each pressure controller is provided with a bypass line through which higher pressures can be applied if required for purging or pressure-transferring. Throttle valves in the bypass lines are used to control flow and pressure. Relief valves prevent overpressurization. The relief valves are connected either to the radioactive vent system or to the atmosphere, depending on whether or not they might release radioactive gases. Locked-open blocking valves are installed on all lines between the relief valves and the equipment; these can be closed to test the relief valves. As a final backup in the event of failure of both control and relief valves

in the reactor system, rupture discs would fail, relieving over-pressure in the reactor to the primary pipe tunnel.

A helium gas leakage monitoring system is incorporated in the reactor vessel helium fill and radioactive vent lines. This system can measure the difference between flows into and out of the reactor vessel by means of two temperature-compensated, integrating-type flowmeters. These flowmeters are permanently installed and will be placed in service during steady-state power operation.

2. Performance History

Prior to reactor operation a preoperational test was conducted on the helium system. This test accomplished the following.

a) The main helium system header and each individual control valve station were pressurized.

b) Proper function of the helium system controls and instrumentation was demonstrated.

c) The helium third fluid monitoring systems for all 3 steam generators were evacuated and purged to prepare the systems for operation.

d) Correct operability of the controls and instruments in the helium third fluid systems (for the steam generators) was verified.

While conducting this test, some discrepancies were found and corrected.

The single-stage pressure control valves originally installed on the helium control manifold would not maintain a constant downstream pressure. These were removed and replaced with multistage pressure control valves that would maintain a constant downstream pressure.

An 8-hr pressure decay on the third fluid system disclosed excessive leakage. Rupture discs, vent valve, and header leaks were repaired. The system was then retested and was found to hold 350 psig for at least an 8-hr period.

During the preoperational test, one of the reactor leak rate flow integrators was damaged by overpressurization. This trouble was encountered because the flow integrator was installed near enough to the pressure control station to be affected by excessive pressure surges when helium was being admitted to the system. A 5-ft^3 capacity surge tank, filled with steel wool, was installed upstream of the flow integrator in an unsuccessful attempt to prevent excessive

pressure buildup in this unit. A pressure regulator, which reduced the helium supply pressure from 50 psig to 15 in. H_2O, and still provided at least 15 cfm flow, was then installed upstream of the pressure control station. The pressure control valve was then noted to be limited to a flow rate of 3-1/4 cfm under the new pressure conditions. This rate is too small to provide sufficient makeup to the reactor core during severe core temperature changes. The valve seal and plug were then exchanged for larger sizes, and a satisfactory flow rate of 10 cfm was obtained. During postcritical testing, the integrating flowmeters were proven by series calibration to be accurate to about 0.2%. However, the measured helium flow out of the reactor was consistently greater than the measured flow into the reactor. One postulated reason for this anomaly is that pressure variations in the meter associated with varying supply and vent flow rates may be affecting the accuracy of the flow signals. The meters are a positive displacement type and gas density changes will affect the sensitivity. Further testing is planned to determine the magnitude of these pressure effects.

Some inherent undesirable control characteristics were noted in the reactor and primary fill tank pressure controls in that the controller sensing points are located in the supply lines, causing a false increase in indicated pressure when helium is flowing in the lines. This condition is not deemed serious enough to necessitate modification, but should be considered in the design of future systems.

F. INSTRUMENT AND SERVICE AIR SYSTEMS

HNPF instrument and service air are supplied from compressors located on the conventional side of the plant. The nuclear-side (HNPF) preoperational test revealed that the air compressors were unable to supply enough air to meet the requirements of both the conventional and nuclear sides. Excessive leakage on the nuclear side was suspected. Extensive leak tests were conducted, and the few minor leaks discovered were corrected. A study of the vendor literature disclosed that the instrument air compressors did not meet design specifications. A modification was then made, in which the valve size and piston diameter was increased, thus bringing their capacities into the range of the air requirements. No difficulties have been encountered since.

G. HEATING AND VENTILATING SYSTEM

1. System Description

a. Design Criteria

The reactor building ventilation system is designed to satisfy general heating and ventilation requirements for personnel comfort and to minimize the possibility of contaminating the entire plant as a result of an incident in which radioactivity is released to the air. The design objective with respect to confinement of the building atmosphere is to maintain a negative pressure relative to outdoor barometric pressure, in order to ensure that leakage of air is inward toward potentially radioactive areas. In addition, all building exhaust air from potentially radioactive areas is routed through filter systems to exhaust fans and the stack. To minimize the chances of spreading airborne contamination, pressure differentials within the building are maintained so that the flow of air is toward areas more likely to be contaminated. To meet these general requirements, the reactor building is considered to be divided into three areas for ventilation purposes as follows.

1) Reactor Area - Reactor high bay, Auxiliary bay, Sodium melt station, Maintenance cell operation area, Secondary sodium equipment area, Wash cell operating area, and Helium and nitrogen valve operating area;

2) Service Area - Pre-amplifier room, Counting room, Health physics room, Lockers and showers, Toilets, Clean clothing issue and storage, Personnel decontamination, Laundry room, Equipment decontamination room, H and V equipment room, and Ventilation filter room;

3) Control and Steam Generator Area - Control room, Cable spreading room, Electrical switch room, Battery room, Diesel generator room, and Steam generator room.

Clean areas such as the control room, in which no contamination is anticipated, are maintained at a pressure of +1/8-in. H_2O with respect to atmospheric pressure. Areas in which no contamination is expected but where the possibility of contamination exists are maintained at pressures varying from

atmospheric to 1/8-in. H_2O below atmospheric. Areas over primary coolant vaults, such as the high-bay area and auxiliary-bay area, are maintained at -1/8-in. H_2O.

The ventilation exhaust system also serves as a means of diluting vent gases released from the inert gas systems stored in the radioactive vent system that are subsequently released to the ventilation exhaust stack.

b. Description of the System

(1) Reactor Area

Ventilation for the several areas included in this category is on a once-through basis. Outdoor air is supplied to the reactor area through an entrance louver and inlet air filter, a fan and coil unit, distributing duct work, and supply air controls. All areas in this category are maintained at -1/8-in. H_2O relative to outside atmosphere in order to provide complete air flow control to the stack.

All air exhausted from the reactor area is filtered for particulate removal through filter banks in the central exhaust sytem.

Filters for this system are housed in three separate walk-in type enclosures located in the filter room at ground floor level near the building ventilation stack. Two banks are normally in operation, with the third ready for standby service. Each bank contains 36 roughing filters, 36 prefilters, and 36 final filters, positioned in vertical tiers of 6 high by 6 wide. The filtrate passes successively through the roughing filters, prefilters, and final filters as it moves through the enclosure.

The roughing filters are Farr Type 44 C-1, 24 in. high by 24 in. wide by 4 in. deep, with a coated fine wire mesh filter media listed as Underwriters Laboratories Class I. The prefilters are MSA "dust-Flow" 24 in. high by 24 in. wide by 6 in. deep, with a glass wool filter media (UL Class I). The prefilters are 90 to 95% efficient, based on the NBS discoloration tests on atmospheric dust. The final filters are MSA "Ultra-Air" 24 in. high by 24 in. wide by 12 in. deep, with a maximum efficiency of 99.95% based on dust efficiencies as defined by the NBS test method. These high-efficiency filters are of glass fiber media with nonmetallic separators. The assembly is capable of withstanding air temperatures of 800°F.

In the event of a fire in the reactor area and upon automatic or manual actuation of the central fire alarm system, all supply air to the reactor building is cut off, and the large vertical lift doors to the auxiliary and high bay areas, if open, are closed. Upon manual signal by the operator, the main exhaust fans are shut off, the auxiliary fan is started, and all exhaust from the high bay area is routed through the dry scrubber which removes the bulk of dry particulate matter from the building exhaust. The exhaust from the scrubber is discharged directly to the stack to avoid the possibility of clogging the main exhaust filters. This ensures a continuous stack discharge and a negative building pressure during a fire.

The scrubber is similar to that furnished by the American Air Filter Co. to the steel, carbon black, and cement industries to remove particulate matter from hot stack gases. The design features vertical filter bags, a reverse air jet for unloading the bags into a divided hopper, automatic hopper unloading, continuous operation at 500°F, and a capacity of not less than 7500 cfm at 6-in. maximum pressure drop. Filter bags are siliconized, custom-made, glass-fabric unit designed to withstand temperatures of 500°F. The hopper unloads into a concrete trench located beneath the unit.

In order to provide continuous exhaust service under normal conditions, two constant-volume fans are furnished, one on regular duty and one on standby. Each fan delivers approximately a constant 78,800 cfm to the reactor building ventilation exhaust stack. Fans are started by manual selector switches located on the main control console in the control room. Selection of one fan for regular duty service automatically causes that fan to start and the other to become the standby. Failure of the regular duty fan to deliver 50% of rated flow will cause a switch in the stack exhaust flow control to start the standby fan automatically and to actuate an "automatic start" alarm. If the standby is caused to start automatically for reasons other than failure of the power supply to the regular duty fan, the regular duty fan will continue to run simultaneously with the standby until stopped manually. However, stack flow is limited to 78,800 cfm even if both fans are operating. An automatic volume control damper is located downstream of the main filter banks controlling unfiltered outdoor makeup air to maintain constant exhaust volume to the exhaust fans regardless of the volume of air leaving the reactor building.

When building power is lost, the main exhaust fans are shut down and their dampers closed. The auxiliary fan will start and its discharge damper

open as soon as the diesel generator starts. The damper between the filter outlet plenum and the auxiliary fan will also open, so that building exhaust will be pulled through the main filters by this fan and discharged to the stack.

The ventilation exhaust stack is located at the southeast corner of the reactor building adjacent to the ventilation filter equipment room. The top of the stack is 100 ft above the reactor floor. The inside diameter of the stack is 5 ft.

The last major element of the reactor ventilation system is the building leak test loop. The loop consists of a 10,000-cfm fan unit and a flow recorder in parallel with the main exhaust system, upstream from the filter bank. When this system is placed in operation, all air intakes and doors through the reactor building are closed and all reactor building exhaust air is bypassed through the test loop. Building leakage is expected to be approximately 3,120 cfm when the internal building pressure is regulated to -1/8-in. H_2O.

(2) Service

Ventilation air to the several areas previously listed for this category is introduced through separate entrance louvers, inlet air filters, intake fans, and heating coil units. The 12,800-cfm total supply is exhausted to the reactor building exhaust system, and passes through the filter banks to the exhaust stack.

Inlet air filters and fan and coil units are similar to those furnished for ventilation to the reactor area. The locker and shower, toilets, clean issue and storage, personnel decontamination, ventilation filter room, H and V equipment room, laundry room, and equipment decontamination room all have minimum outdoor air changes of 6 per hour, with pressures within these areas maintained at -1/8-in. H_2O with respect to outside atmospheric conditions. The preamplifier room, the counting room, and health physics room have minimum outdoor air changes of 2 per hour with pressures maintained in these areas at atmospheric. Conditioned air is provided to the health physics, counting, and preamplifier rooms.

As in the reactor area, air supply to the service area can be shut down either manually or automatically by a signal from the fire control panel.

(3) Control and Steam Generator Area

The control room is supplied with air from a central heating, ventilating, and air-conditioning system located in the conventional portion of the plant. The system is designed to maintain the space at a constant pressure slightly above outdoor barometric.

Supply air to the battery room is also furnished from the conventional part of the plant. The diesel generator room is provided with a separate air system which cools the diesel generator and ventilates the room with air taken from the turbine area vent system.

The steam generator area is separated from all other areas of the building by concrete walls and ceilings. This area receives its air supply from the outdoors through three fan-and-steam-coil units located in the upper part of the room. These units provide an air supply for ventilation and a means of cooling the equipment located within the area with outside air. Temperatures within the steam generator room determine whether 1, 2, or 3 units are in operation at one time. Pre-heat coils from these units operate when the outside air temperature is 30°F or lower; in addition, a reheat coil, controlled by a sensing element in the exhaust duct, maintains an inside air temperature of 70°F during winter weather. Exhaust air from these clean areas is discharged directly to the atmosphere.

2. Performance History

The HNPF heating and ventilating system has operated satisfactorily according to original design requirements. However, many additional requirements have been added since it was installed. Due to these additional requirements, and to several noted deficiencies the system has been subjected to a series of adjustments and improvements. Although the system operation has been less than optimum, most of the deficiencies have been corrected. A synopsis of some of these deficiencies and corrective measures follows.

a. Filter System

The original building filter system consisted of a series of unoiled roughing filters, oiled prefilters, and unoiled absolute filters. Carryover of oil from the prefilters caused the absolute filters to plug, creating in 3-mo operating time enough of an excess pressure drop to cause the building exhaust fans

to run out of speed control in an attempt to maintain design stack air flow. The oil carryover problem was solved by eliminating the prefilter media from the system and oiling the roughing filters. However, another problem was created in that, above ambient temperatures of 70°F, oil would drip from the roughing filters and puddle on the filter room floor. This problem will be alleviated by dipping the roughing filters at higher ambient temperatures and permitting longer drainage times at these higher temperatures prior to reinstallation.

Charcoal filters, for the removal of iodine from the building effluent gases, were installed downstream of the absolute filters. This innovation, not included in the original design, created a problem in that correct seating of the filter frames and its consequent elimination of leakage around the filter frame could not be accomplished. It was decided to determine to correct seating of the charcoal filter frames by visual inspection and install a smoke-test system complete with smoke generator and appropriately placed detector heads to check for leakage past the absolute filter frames

The building exhaust filter system is now operating satisfactorily.

b. Exhaust Fans

During startup, four known problems existed in the building exhaust fans. The first was bearing oil leakage in the fan motors due to too high an oil level being maintained in the bearing housing. This problem was alleviated by attaching the pipe supply nipples and reservoir at lower levels on the outside of the bearing housing. The second problem was excessive vibration. This problem was solved by rebalancing the speed control drives and realigning and tightening the base hold-down bolts. The third problem was associated with the starting controls. Each fan has a duct-mounted differential pressure switch which acts as a low-flow start switch for the nonrunning fan. When this low-flow switch was adjusted to permit startup of the fan, it would not give the low-flow protection desired during operation. Also the step-start of the fans effected an overload of the electrical breaker. Therefore, the fan control system was modified to place the speed control at zero speed until the motor was at design speed, and to cut the differential pressure switch out until the fan was operating at design speed.

The fourth problem, that of marginal capacity for the building exhaust fans, is still under consideration. This problem is associated with the additional

requirements and demands placed on the system. Flow-straightening vanes were installed in the fan inlet ducts to eliminate undesirable flow characteristics which had been detected with velocity probes. These did not effect any noticeable improvements. Since the exhaust fans are sized for the same capacity as the inlet fans, and the building is maintained at negative pressures, creating some air inleakage, there is inadequate margin allowed for control.

c. Air Supply

The filters supplied for inlet air are the moving mat type, fed from rolls on a timed cycle, with a roll end switch for indication of depletion of the supply roll. The drive unit appears to be on too fast a time cycle, since the filter material appears unused after going through a complete use cycle.

d. Pressure and Temperature Controls

Some operational difficulties have been encountered in maintaining the specified negative pressures in the high bay and auxiliary bay. Though each area has its individual controller, the separation between the two areas has many chances for air passage. This brings about a tandem or following effect for one or the other of the two controllers. With the large volumes involved and sluggish control dampers, this tandem effect makes pressure control of these two areas less sensitive than is desirable.

Thermostats originally installed in the building operated at ranges between 80 and 120°F, which is outside the comfort range. These thermostats were recalibrated and a bias adjustment applied that dropped the 80°F indicated temperature down to about 75°F. This placed building temperature control more in the comfort range.

One definite temperature problem area is the secondary sodium service area which is much too hot for comfort. One of the reasons for this is that the supply air for cooling of the secondary cold trap is taken directly from the supply inlet duct for the secondary sodium service area, thus robbing the area of the volume of air needed for sufficient cooling.

Another temperature problem area is the high bay area. During the hot summer months, with the primary sodium pumps running, the heat load is greater than the dissipation capacity of the present heating and ventilating system. This problem is under consideration.

d. Sodium Oxide Scrubber

The sodium oxide scrubber was a late addition to the heating and ventilating system, and was purchased as a package unit addition. Since installation, much work has been required to make the system operable. The many air-operated valves in the system have been a source of difficulty, in that dirty air-lines have fouled actuating solenoids and piston operators. This problem has been eased by adding supply air-lines strainers and blowing out some of the air supply lines, but it still recurs. It is hoped that this recurring problem will disappear as the system cleans itself.

Another problem area is the reclaim cycle. The conveyor system was designed to handle the flow from the two feeders under the hoppers and return the asbestos to the storage unit. The system required redesign at both terminals. At the feeder end, slots had to be cut in the waste storage pit barricade gates to get supply air to the pneumatic conveyor. The entrance from the duct to the conveyor system had to be enlarged to prevent plugging. At the discharge end of the reclaim system the asbestos is collected in bags at the top of the storage silo and dumped into storage. Since the bags were not emptying satisfactorily, a bag cleaning system had to be installed.

Due to poor grading around the waste storage a problem of ground water collection in the waste storage pit existed. This problem was partly solved by pouring a concrete slab around the storage pit and grading the surrounding area to provide proper runoff of surface water.

The oxide scrubber system now operates satisfactorily with only occasional recurrence of valve hang-ups.

H. STEAM AND FEEDWATER SYSTEMS

The steam dump system was put into service early in January 1963, and performed as designed for nearly a month. At this time, an increased conductivity in the condensate water after a scram indicated a raw water-to-condensate leak. The reactor finally had to be shut down because of excessive water losses. The leak was discovered to be around a faulty gasket in atmospheric boiler 1. The gasket was replaced and the steam dump system was returned to service. Performance since then has been satisfactory.

During the latter part of February 1963, the capacity of the emergency steam driven feedwater pump was determined. This pump serves as a last-resort measure to feedwater to the steam generators for removal of afterglow heat. This pump-capacity measurement was taken in accordance with the post-critical testing program during a power rise of from 20 to 38 Mwt. The Terry turbine was able to hold rated speed of 3600 rpm up to 84,000 lb/hr of water. The pump was operated to a flow of 117,600 lb/hr of water with a feedwater discharge pressure of 965 psig before it was removed from service. At this time, the speed had decreased to 3543 rpm. It was thus determined that the emergency feedwater pump can supply more than the design rate of 110,000 lb/hr of feedwater.

I. COOLING WATER SYSTEMS

The cooling water system was preoperationally tested by (1) filling spent fuel storage pit 3 with water, using the condensate supply pump and head tank, and (2) circulating water through the systems serving the reactor pipe chase and pipe gallery coolers, reactor building heating and ventilating coolers, nitrogen coolers, and closed system heat exchangers.

Before this test was completed, it was apparent that the closed loop cooling water pumps as specified were inadequate for system requirements.

To overcome this problem these three steps were accomplished.

1) System resistance was reduced by exchanging selected globe valves for gate valves, and eliminating duplicate reading orifices.

2) The largest diameter impeller compatible with the existing motor and pump casing was installed.

3) When the above modifications failed to correct the system deficiencies, minor modifications to the suction and discharge piping were made and a larger pump with a more powerful motor was installed. After completion of this third step, the closed loop cooling water system operated satisfactorily.

When the reactor was operating at a 38-Mwt power level with 20% sodium flow, the concrete temperature in the biological shield immediately above the reactor bellows was noted to be above the design temperature of 150°F. At this

time, cooling water was flowing in this region at a maximum possible rate. Excessive convective heat transfer by the reactor cover gas appears to be the reason for the higher temperature in this region. Shielding in this area is much more than adequate; this concrete makes no contribution to structural strength. Therefore, the higher temperature and its consequent dehydration of the concrete is not considered to be a matter of great concern.

XIII. INSTRUMENT AND ELECTRICAL SYSTEMS PERFORMANCE ANALYSES

HNPF-ROAP methods for analyses of these systems have not been developed. A major portion of these analyses will be accomplished as a part of the Components Reliability Program, Section XI. Following is presented a summary of the performance history to date for each system.

A. PLANT CONTROL SYSTEM

The HNPF plant control system has been subjected to a preoperational test in which each plant control subsystem was placed into operation and verification was obtained that it would operate as specified. Any discrepancies encountered in conducting the preoperational test were corrected before the test procedure was signed off as complete so that at the end of the preoperational test the system was ready for service during operation at power.

During the rise to 15% power, the Phase II portion of the postcritical testing of the plant control system was completed. Accomplishments of this phase of the postcritical test on the plant control system are given below.

1) Load-following capabilities were demonstrated at 10, 20, and 38 Mwt by rerouting the steam dump flow signal through a ratio relay to the plant power control subsystem, and simulating changes in load demands by varying the steam dump pressure setpoint.

2) The capability of the automatic flux control subsystem above 2.5 Mwt was demonstrated by several days operation on automatic flux control at steady-state conditions, and by using the associated hand control station to induce power level changes.

3) Excepting some mechanical problems leading to binding of the throttle valve actuators, the convection flow control subsystem has demonstrated satisfactory operation after each scram. Prior to having operated long enough to build up adequate afterglow heat, when the reactor scrams, especially from lower power levels, it cools at a rate greater than 50°F/hr with the minimum flow effected by the convection flow control system on "auto." Thus a transfer from "auto" to "manual" occurs after each scram. Plans were therefore made to operate for the time being, with the convection flow control on manual with a predetermined output corresponding

to a set throttle valve position. After the initial temperature transient on a scram, the controller will be manually adjusted until the deviation alarm clears, and then transferred to automatic control.

4) Flow control with all 6 sodium pumps slaved to one hand control station was demonstrated to be smooth and stable above 8% flow.

5) The capability for successful restarts of the sodium pumps for a hot startup of the plant has been demonstrated. The pumps were first started using an initial speed-demand setting of 2% of full speed; then they were stopped and restarted by using 20 and 40% steps. Smooth starts were effected in all three cases.

6) In the flux controller, a high noise level was causing erratic automatic operation below 2.5% power. Investigation revealed that the noise originated in two places: one, relay contact arcing; the other, the nuclear instrument cable-checking pulse (monitor). To correct the relay contact arcing noise problem, simple r-c suppressors were installed on the offending relays. This allowed automatic flux control operation down to 1% power, the design point. The problem of the nuclear instrument cable-checking monitor (a 70-μsec pulse every second for verification of cable continuity), and its effects on the duty cycle of the flux control system, is being investigated.

B. PLANT PROTECTIVE SYSTEM

The plant protective system has been preoperationally tested. This test involved checking out and aligning the protective panel for operational use. Voltages, gains, and setpoints were adjusted. With all systems installations completed, the protective system was checked out, using signals from the sensing elements. All associated annunciators and setback and scram circuits were made to operate under prescribed conditions. Remote meters were checked for accuracy, and startup interlock circuitry was made to function. After these tasks were completed, the plant protective system was deemed ready for power operation.

During the rise to 15% power, Phase II of the postcritical test for the plant protective system was completed. In this test, the protective panel computers

were realigned, the operability of each interlock, setback, and scram circuit was tested and proper function of the overall system was established. Test results indicated satisfactory performance. However, one problem was noted in that the T_0 computers were "loading" temperature input signals, resulting in depressed indications. This trouble was corrected by adding a series resistance between the computer input and the thermocouple leads, and compensating for the added impedance by increasing the amplifier gain in the computers. Each computer was then checked for temperature and rate of temperature change trip, and was found to function properly.

A "live" check of the dT/dt computer was inadvertently obtained during performance of a negative power ramp at constant flow as part of a power coefficient test. The 25°F negative step change limit in the measured fuel channel outlet temperatures was exceeded: the dT/dt computers performed, as designed, and scrammed the reactor.

Also, Channel 7 (uncompensated ion chamber) power indication was noted to be higher than that obtained by steam calculations, and was calibrated accordingly. Channels 5 and 6, same type as Channel 7, did not require any recalibration.

C. NUCLEAR INSTRUMENTS

The nuclear instrumentation system was subjected to a preoperational test using test in which the operability of the 9 nuclear instrumentation channels was proven, and verification was obtained that startup channels I and II (BF_3 chambers) were able to detect the presence of neutrons. In the process of executing this test, many discrepancies were discovered in the nuclear instrumentation system. These discrepancies were all corrected before the preoperational test was signed off as completed.

These problem areas were illuminated as follows.

1) The cabling between the nuclear panels, preamplifiers, and detectors is not enclosed in steel conduits. As a consequence, extraneous noise problems existed.

2) Cabinets for nuclear instrument components are not designed for optimum accessibility and cooling. As a consequence, maintenance is more frequent as well as more difficult.

3) No allowance was made for low power cutout of alarms associated with excessive differences in nuclear channel reading. As a consequence, spurious alarms were effected by noise induced transients during low power testing.

After the preoperational test was completed, efforts to optimize and evaluate the performance of the nuclear instrumentation system have continued. A description of some of these efforts is contained in the following paragraphs.

Prior to starting the rise to 15% power, all circuit components in the source range (BF_3 channels) and intermediate range (compensated ion chambers, Log-N) nuclear channels were inspected. Those that appeared to be a source of future problems were replaced. While the reactor was operating at a power level of 2.5 Mwt, period setbacks were noted to be induced by relay noise from the rod bank switch. A 0.5-μf capacitor and Series 47 ohm-resistor were installed in the Log-N output circuit to damp out this noise and eliminate the source of trouble.

The intermediate range channels (3 and 4) contain gamma-compensated ion chambers for detectors. Compensation of these chambers was evaluated during and following a scram from 10 Mwt. The decay of the measured flux, following scram and prompt drop, was measured from the slope of the recorder trace. Channel 3, which was compensated by -27 v, showed a negative period of 94 sec. Channel 4, which was compensated by -36 v, showed an 82-sec negative period. Since a negative period of 80 sec, corresponding to the decay of the longest lived neutron group, is expected, it was evident that Channel 3 was undercompensated.

Channel 3 compensation was then changed to -36 v. A checkout after a later scram from 38 Mwt proved both channels to be adequately compensated.

A circuit was incorporated in the log count rate recorder network which can render it less sensitive. At lower power levels, this circuit is necessary to eliminate chatter in the recorder by damping out noise signals. When switched in, the circuit, a simple r-c network, increases the response time of the recorder, thus reducing its sensitivity.

Observed variations in relative flux indication of Channels 2, 3, and 4 were correlated with localized flux depressions near Channel 2, which varied with time due to rod movement. These variations have thus been attributed to rod shadowing, so instrument malfunction has been eliminated as a reason for the variation.

D. RADIATION DETECTION AND MONITORING SYSTEM

The radiation detection and monitoring system (RD&MS) was preoperationally tested. Each of the radiation and monitoring system detectors was tested separately using a known isotope source and the detector internal calibration source. The known isotope source was placed near each detector and the associated indicator on the RD & M panel was observed for the correct reading. Each detector channel was calibrated by using the internal calibration source and observing the associated indicator for the proper reading. Each measuring channel was actuated so that any associated control action was initiated and the system was observed for the correct response.

After the preoperational test was completed, the system was placed in service and maintained for satisfactory operation.

The carbon vane sampling pumps in the stack particulate monitor and on the stack monitor have been a source of inconvenience in that the carbon vanes have been breaking, thus necessitating replacement before two days of continuous operation. Oilite bronze vanes were tried as replacements for the carbon vanes. These lasted longer, but showed a definite tendency to clog. Although the oilite bronze vanes did not break, they did appear to wear down quickly, so they were removed and carbon vanes reinstalled. Water injection was tried as a solution to this problem with no success. The problem was finally alleviated by (1) shimming the cases to provide more pump vane clearance, and (2) rearranging the inlet and outlet piping for both pumps so that each would have its own individual stack gas connections.

When the radioactive liquid waste detector was checked following the installation of the check source solenoid, the resistance measurements of the beta-gamma tubes were found to be low. The detector was removed from the system and the beta-gamma tubes were removed from the detectors and found collapsed. The lead shielding and system piping were reinstalled and replacement tubes were ordered. An investigation is being conducted to determine why these tubes collapsed.

The system piping for the reactor cover gas monitor originally operated under negative pressure, causing some concern about the possibility of introducing air into the reactor cover gas through this system. This possibility was eliminated by relocating the system filter to the discharge side of the sampling pump, thus causing the piping to operate under a slight positive pressure.

Some of the area detectors have caused system malfunctions due to open electrometer filaments. This problem is under investigation by the vendor.

E. SODIUM LEVEL INSTRUMENTATION

The sodium level instrumentation at the HNPF consists of induction coil continuous reading level gauges and/or one or more induction coil alarm points for each sodium tank or vessel. The basic induction coil element consists of a coil of constantan wire, with fiberglass insulation, formed on a bobbin. The coils are placed on hanger rods according to level requirements, and insulated from the outer protective stainless steel tube by means of a fiberglass sleeve.

There are three different types of level gauges: alarm only, alarm and incremental level reading, and continuous level reading (obtained by manually switching 1-ft and 2-ft coils). The theory of operation is that of an a-c impedance bridge. To compensate for temperature, lead resistance, and other installation variables, the reference and sensing coils are located on the same level probe. Signals from the bridge circuit actuate relays for alarms, lights for incremental indication, and indicators and recorders for continuous level monitoring.

This system was preoperationally tested in which verification of the function of components was made prior to sodium contact, and calibration was effected during sodium filling, using a portable level probe for reference.

Since the preoperational test was completed, the sodium level instrumentation has shown satisfactory, though not optimum, performance. The tubes in the indicator circuits have shown aging problems which have necessitated frequent adjustments to compensate for the decreasing tube outputs.

F. SODIUM PRESSURE INSTRUMENTS

The sodium pressure measuring instruments consist of NaK-filled diphragm sensing elements, NaK-filled transmitting capillary tubes, electronic transmitters, alarm relays, and indicating and recording receivers. The sensing element is a sealed, NaK-filled cell, with a 25-mil-thick inconel/diaphragm. The diaphragm, cell, and capillary tube are welded together to form a sealed 1-piece unit. The sensing element is capable of operating in a range from 100 to 1400°F, and transmitting pressure signals through 125 ft of capillary tube. The pressure is transmitted through the diaphragm and capillary tube to the electronic transmitter,

where the pressure signal is converted to a 1-5 ma electrical signal. This signal actuates indicators, recorders, and alarms.

The sodium pressure instruments were subjected to a preoperational test in which all the pressure indicators were checked to assure that they indicated 0 psig with the transducers at atmospheric pressure. A calibration check was then effected, using pressurizing rigs and test gauges.

Since the preoperational test was completed, the sodium pressure instruments have been in almost continuous use with nearly satisfactory performance. Some problems have been encountered, in that the 0 position on some of the instruments tends to shift with use. A postulated reason for this shift is that the diaphragms become coated with layers of sodium oxide, changing their characteristics enough to give false pressure signals. This problem is being investigated.

G. SODIUM FLOW INSTRUMENTS

Sodium flow rates at the HNPF are measured by permanent-magnet flowmeters. The main components of the flowmeters are high-quality Alnico-5 permanent magnets, electrodes which are welded to the pipe, harnesses for attaching the flowmeters to the piping, and thermocouples for measuring the magnet pole face temperatures. Periodic calibration of the large controlling flowmeters is accomplished by the remote operation of a flux coil. The initial calibration curves can be corrected by applying a simple proportional relationship of the original magnetic flux coil reading to the new flux coil reading. It is anticipated that the magnetic potential of the Alnico-5 magnet will decay slightly in years of service. Gain compensation for flux decay is provided in readout equipment.

The HNPF sodium flow instrumentation was preoperationally tested. In this test, the flowmeters were visually inspected to ensure proper electrode location and alignment and the gap flux densities of the 6- and 14-in. flowmeters were recorded for futer reference. Also preoperation of the readout equipment was verified.

Since the sodium systems were filled, and sodium has been circulating in the loops, the flowmeters have been in continuous use.

False confidence in the accuracy of the main primary sodium flowmeters resulted in operation of the reactor at a power level greater than the authorized

15% of full power during Phase II of the postcritical test program. A power level of 38 Mwt was established, using a calculational method involving primary sodium flows and reactor ΔT. While operating at steady-state conditions, the power level was checked using steam conditions, and was found to be about 47.3 Mwt rather than the 38 Mwt calculated by the sodium flow-ΔT method.

Reactor temperature measurements appeared to be accurate; therefore, the disagreement between the results obtained by the sodium method and those obtained by the more accurate steam method were attributed mainly to uncertainties in the calibration characteristics of the sodium flowmeters. It is planned to obtain more accurate sodium flowmeter calibrations at the higher power levels. The reactor ΔT's will be recorded and used with the actual thermal power to calculate primary sodium flows. These calculated sodium flows will then be compared with the indicated flows for calibration purposes. Suitable adjustments in the plant protective system computers will be made to take into account the actual sodium flowmeter calibration curve.

H. TEMPERATURE INSTRUMENTS

The sodium temperature measuring instrumentation at HNPF is divided into three groups, each of which is classified as to function and type of thermocouples used. All thermocouples except those on the instrumented control rod are of iron-constantan ISA-J calibration. Those used on the instrumented control rod are chromel-alumel.

The reactor core thermocouples have Type 347 stainless steel sheaths with reactor grade magnesium oxide insulation. The locations of the thermocouples are as follows: 2 in each fuel element sodium flow outlet, 16 in the source element, 16 in the specially instrumented moderator can, 16 in each of three temperature elements, 18 in each of two "thermocoupled" fuel elements, and 16 on the specially instrumented control rod. The fuel element sodium outlet thermocouples are in contact with liquid sodium to give fast response. These thermocouples provide signals for the reactor control system, plant protective system, and reactor core temperature scanner, and for the preheating controllers.

The reactor structure system uses MgO insulated thermocouples, with 1/8-in OD Type 304 stainless steel sheaths. These are used primarily to determine various thermal gradients across the reactor structure during normal operation and preheating.

Sodium piping and process thermocouples are primarily of two types: one, a spring-loaded, silver-tipped thermocouple that is spring-held against the pipe; and the other, which is more critical, a spring-loaded silver-tipped dual thermocouple, which is held in a Type 304 stainless steel well that penetrates the pipe. These thermocouples are used in preheating, and by the plant control and protective systems.

The HNPF sodium temperature instrumentation was preoperationally tested. In this test, verification of the proper functioning of the temperature instrumentation was obtained, and the calibration of each readout was checked with simulated temperature signals.

When the reactor was operating at a power level of 10 Mwt, the main heat transfer system process thermocouple readouts were spot-checked against a laboratory-type potentiometer. Large deviations were noted. Again at the 20-Mwt power level, all the important temperature-sensing devices were checked against a laboratory potentiometer and large deviations were noted. Correction information was compiled and corrections were made at a later date.

I. SODIUM LEAK DETECTORS

Sodium leak detectors are located in the cells of primary loops on piping, valves, pumps, and other components where leakage might occur or be readily detected. They are normally not accessible during operation. Each leak detector consists of two electrodes which are joined electrically when both contact sodium. A common alarm system is used to indicate a leak, and a light for each detector indicates the location of the leak. To check the continuity of each detector circuit, a high resistance (25,000 ohm) path is placed in the circuit parallel to the electrode gap and as close to it as physically possible. A switch in each detector circuit allows the circuit to be monitored under test with a milliammeter. A second leak-checking system is provided in the reactor containment and cavity liner leak detectors. One electrode of these detectors is a thermocouple, and the other is the sheath of the MgO cable. A portable potentiometer is used to check the thermocouple junction, thus checking the leak detector electrodes for continuity. A modification conceived and executed during the performance of the preoperational test on the leak detector system changed the test metering circuit, so that the test meter will indicate midscale deflection when the detector is not shorted, and full-scale deflection when the detector has a

zero ohm short. This modification gives the operator a much more precise indication of when there really is a sodium leak.

Since the preoperational test was completed, the sodium leak detectors have been in continuous service and have performed well. A few spurious alarms came in during initial operation, triggered by moisture in the MgO insulation. This problem disappeared after the insulation dried out at higher temperatures.

J. MOISTURE DETECTORS

The moisture detectors at HNPF are located in the nitrogen cooling ducting and serve the purpose of notifying the operator when the moisture content in the nitrogen is high enough to create a hazard due to the possibility of its coming into contact with liquid sodium. The detectors consist of blocks of wood that, due to their hygroscopic effects, tend to grow when moisture is present. The wooden blocks, fixed at one end, have flappers attached to the other end that restrict constant flow type orifices as they grow with moisture content. As the nitrogen flow through the orifice is restricted, upstream pressure rises. A pressure switch senses this upstream pressure and, when a preset value is reached, sends an electrical signal to the alarm system. This signal actuates a red alarm light on the control room main board moisture panel and actuates the control room main board annunciator horn.

Since installation and checkout of the moisture detection system, it has performed satisfactorily under continuous operating conditions.

K. FIRE DETECTION SYSTEM

A fire detection system is provided at HNPF which will give audible and visible alarm locally and in the reactor control room when the presence of heat smoke, fire, or combustion products is detected within the building. In the event of an abnormal amount of smoke (or sodium oxide) in the air, the smoke detectors in the exhaust ducts will cause the following automatic actions in the ventilation and filter system: air intake louvers will close, air supply to high bay and service areas is shut off, and any large open doors leading to the outside are automatically closed. If deemed necessary, the operator can route building exhaust air through the sodium scrubber unit to remove sodium oxide from the exhaust gases.

In addition to manual "Break Glass Station" fire alarm devices at HNPF, the fire alarm system is actuated by 4 different types of detectors: Kidde-type

smoke detectors located in the vent ducts, Pyr-A-Larm-type smoke detectors located on the walls of open areas, high-temperature alarm detectors, and high temperature alarm detectors with rate of temperature rise features mounted on the ceilings of relevant areas.

After this system was installed and checked out, an informal test was conducted on it to determine that it operated as designed. It was then placed in service.

During IHX repair work, a sodium-and-wood-type fire occurred in the IHX cell, which sent clouds of smoke into the high bay. The duct-mounted smoke detectors failed to respond, this failure being attributed to the smoke gathering at the high bay ceiling before entering the exhaust duct. A study of the feasibility of relocating these duct-mounted smoke detectors to more sensitive locations is underway. Smoke from a similar fire occurring in the carbon trap cell triggered all the detectors in the auxiliary bay areas. Since the auxiliary bay area is considerably smaller than the high bay areas, smoke readily reached the duct-mounted detectors; thus, their location in the high bay seems to account for the fault, rather than detector sensitivity.

L. ANNUNCIATOR SYSTEM

The annunciator system at HNPF is of a type that is standard at most reactor installations, consisting of can-type relays and flashers with audible alarm and a lighted visual indication of the location of, or cause for, the alarm. On the control room main board, process and noncritical alarms are indicated by white lights; scram alarms are indicated by red lights; and setback alarms by yellow lights. In the scram and setback system, where coincidence circuits are involved, the initial indication is indicated by the horn and a white light. The second or coincidence signal, which initiates the scram or setback, is indicated by a colored light; and all subsequent signals are indicated by white lights. In this way, the operator can determine the signal that caused a particular scram or setback.

In addition to the control room main board annunciator panel, such panels exist at various local boards throughout the plant.

Power for the annunciator panel is 125 vdc, taken directly from the emergency battery banks located on the conventional side of the plant.

The annunciator system was tested as a part of the preoperational test on the plant protective system and has performed well since being put in service.

M. ELECTRICAL SYSTEM—STANDARD, CRITICAL AND EMERGENCY POWER

1. System Description (Figure 29)

Primary power for the HNPF electrical loads is 4160-v, 3-phase, 3-wire resistance-grounded wye, 60 cps. This power is available from two independent sources: normal station transformer, or reserve (startup) station transformer. These two sources of power directly feed the HNPF dual feed selective 4160-v switchgear.

The 4160-v switchgear serves the 6 main sodium pumps and distributes power to 480-v switchgear A, B, and C. Motors, rated between 50 and 200 hp, and twelve 480-v control centers are fed from 480-v switchgear A, B, or C.

Switchgear units A and B form a double-ended, secondary selective, 480-v unit substation fed by two 500-kva, 4160-480/277-v transformers. A normally open bus tie breaker is included to permit energizing both switchgear units from either transformer. Selective overcurrent trip is coordinated between the two main circuit breakers and the tie breaker, between the tie breaker and the diesel generator breaker, between the tie breaker and the 6 control center feeders, and between the diesel generator circuit breaker and the 6 control center feeders. The system has been modified by the addition of a permissive switch mounted in the control room which, at the operator's discretion, blocks the automatic tie-in of B switchgear to A transformer in event of failure of B transformer. This modification reduces the probability of loss of the more critical A switchgear due to feeding a possible fault in B switchgear.

Switchgear unit C is a single-ended distribution unit substation, complete with breakers and a 750-kva, 4160-480/277-v transformer. This unit substation supplies power to the 480-v general service control centers. Selective overcurrent trip is coordinated between the main circuit breaker and the 5 feeder breakers. The transformer has 8% nominal impedance to reduce the shortcircuit interruption requirements of the control center breakers.

Standard auxiliary loads receive power from two independent sources to obtain a high continuity of service. The vital auxiliary loads are normally fed from the same power sources as the standard auxiliary loads, except that

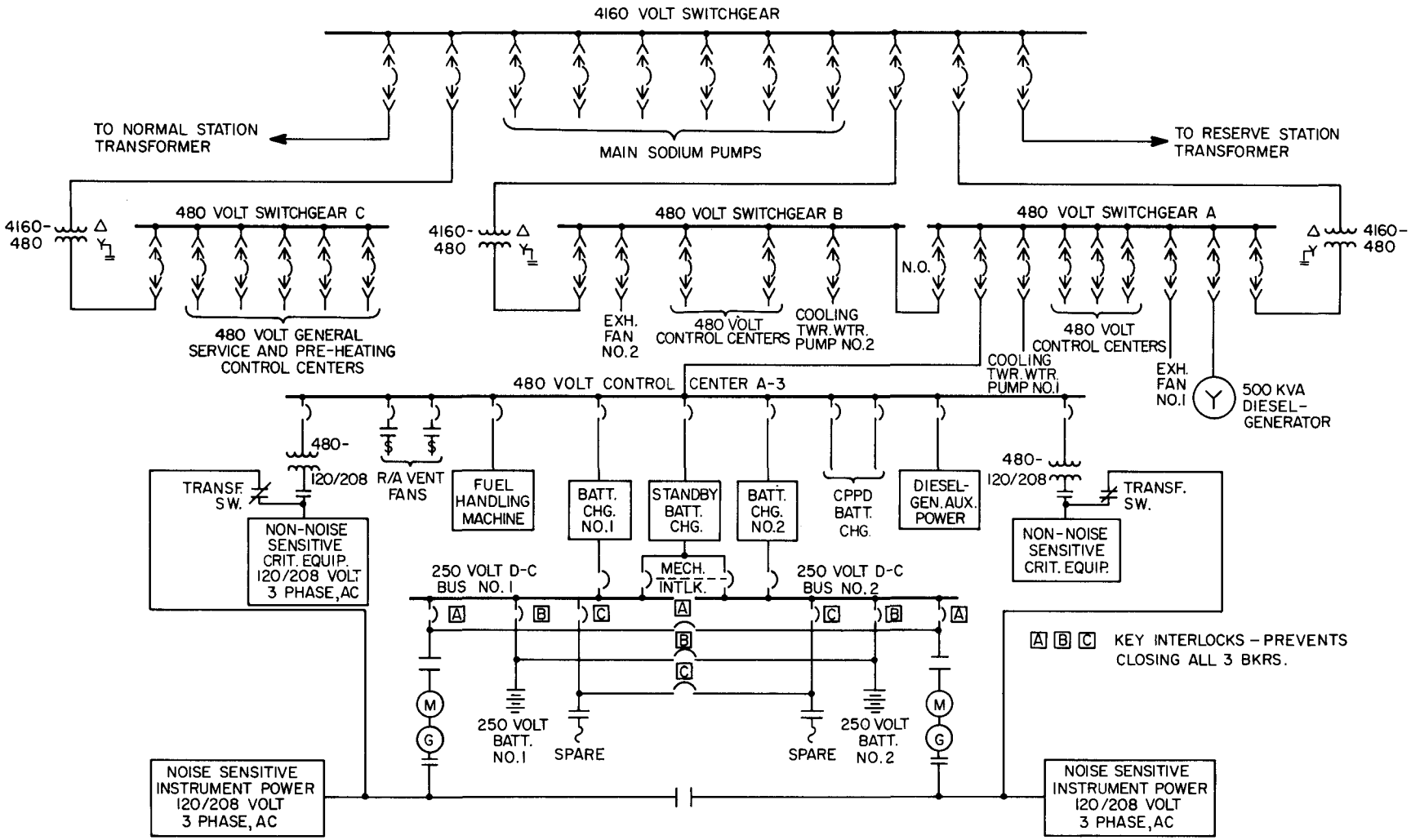

Figure 28. HNPF Electrical System

diesel-generator backup power is provided. The noise-sensitive critical loads are served from an isolated electrical system, which includes battery chargers, batteries, and motor generators. Isolation of the noise-sensitive loads is required so that system voltage fluctuations will not scram the reactor. Since the nonnoise-sensitive loads are not affected by voltage fluctuations, they are not normally served by the isolated system. The nonnoise-sensitive critical loads are rated at 125-v dc; 126-v, 1-phase, 60-cps ac; or 208-v, 1- or 3-phase, 60-cps ac. The d-c loads are served from the conventional side (CPPD) battery, and the a-c loads are fed from 120/208-v critical control centers which are normally served from the auxiliary power system. If auxiliary power is lost, the critical control centers are automatically transferred to the noise-sensitive critical buses. A time delay has been incorporated in this automatic transfer to account for voltage fluctuations reflected down from the 4160-v system. This modification will prevent unnecessary bus transfers and concomitant reactor scrams.

If both normal and reserve 4160-v power is lost (an unlikely event), the 480-v main breakers to switchgear A and B will open, and the tie breaker between switchgear A and B will close. At the same time, the 500-kva diesel generator will automatically start, and the circuit breaker connecting the diesel generator to switchgear A will close when the diesel generator is up to rated speed and is generating rated voltage. Power for starting the diesel generator is supplied by compressed air from one of two full tanks, which are backed up by a gasoline engine compressor.

All breakers on 480-v switchgear A and B will trip on sustained undervoltage, except the breaker which feeds 480-v control center A-3. (Control center A-3 feeds vital auxiliary loads.) Power is thus immediately available to this control center when the diesel generator is on the line.

During the interval between loss of auxiliary power and availability of diesel generator power, the critical a-c loads are supplied from two 250-v batteries through two 25-kva motor generators, and the critical d-c loads are supplied directly from the CPPD 125-v batteries. When the diesel generator is in operation, all battery loads are supplied by the diesel generator, and the batteries are recharged through the rectifiers (battery chargers). This action prevents excess battery discharge, and returns the critical system to its normal operating condition.

2. Electrical Switchgear Performance

The electrical switchgear at HNPF was preoperationally tested. After this test was completed, and the switchgear was placed in service, enough problems in the electrical switchgear were illuminated to vindicate calling in a representative from the switchgear vendor for assistance. The problem areas and corrective measures taken are listed as follows.

a) Many X-relays were burning out because the mechanical linkage that opens the X-relay coil was at a critical point where it could slip off its operating collar and not open the X-relay contacts when the breaker was closed. This allowed continuous current through the contacts and the small intermittent-duty coils, and consequent burnout. This fault was corrected by a simple adjustment to the linkage.

b) Many of the breakers were tripping for no apparent reason. Low contact pressure was the offender here. This resulted in arcing and consequent overheating of the breakers, and consequent tripping of the breakers due to thermal expansion of the sensitive trip linkages.

c) Most of the breakers were very difficult to rack in and out, many racking bars being broken in these attempts. Application of the proper lubricant eliminated this problem.

Since the just-mentioned problem areas were removed and all switchgear was given a thorough cleaning, the electrical switchgeat at HNPF has performed satisfactorily.

3. Emergency Power System

The emergency power system, consisting of (a) the diesel generator, with associated control, starting equipment, fuel oil supply, and circuit breakers, and (b) the critical and noise-sensitive power supplies, including motor generators, batteries, battery chargers, and associated controls and circuit breakers, was preoperationally tested and found adequate to supply all critical loads at HNPF.

Several tasks, as follows, were accomplished during and after the test to optimize the performance of the systems.

a) Voltage and frequency regulators were tuned, and some wiring errors were corrected in the motor generator sets. Noise-sensitive loads were connected phase-to-neutral rather than phase-to-ground, and the noise-sensitive power supply neutrals were grounded at one location to reduce extraneous noise in the system to an acceptable level.

b) A formalized maintenance program for the 250-v battery banks has been put into effect to assure that these are ready at all times for emergency power. This program was adopted after attempting to run on the emergency batteries with emergency loads and finding out that the batteries were expended too quickly due to a low water level.

c) A time delay was incorporated in the critical bus transfer to noise-sensitive power so that unnecessary transfers (and reactor scrams) would not be effected by voltage swings in the 480-v supply system.

d) An oil heating unit has been incorporated in the diesel generator system to facilitate cold weather starting. (The diesel generator room was found to be inadequately heated.)

e) A load-bank has been installed to enable the diesel generator to be tested under load without disturbing the rest of the facility electrical system. Periodic check-starts under no-load conditions had been fouling the fuel ejectors.

f) The auto-start system on the reservoir-to-day-tank fuel transfer pump was modified so that the pump will start and an annunciator will sound when the day tank level drops to a specified level.

g) A relief valve was installed on the air accumulators supplying starting air for the diesel generators. This will prevent inadvertent overpressurization of the accumulators with the gasoline-driven air compressors.

With these modifications, the emergency power system is in nearly optimum operational condition.

XIV. PERFORMANCE OF OTHER PROCESS SYSTEMS AND MECHANICAL COMPONENTS

HNPF-ROAP analytical methods have not been completed for this task. It is expected that most of the analyses will be accomplished as part of the Components Reliability Program.

The following synopsis of performance history has been prepared to provide a more thorough anticipation of future performance history for the systems and components involved.

A. MAINTENANCE CELL (Figure 29)

The maintenance cell is designed for the disassembly, reassembly, and packaging for shipment, of radioactive components, such as fuel elements, moderator elements, control rods, pumps, and the internals of the fuel handling machine. It consists of two areas defined as the in-cell and the operating areas.

The in-cell area is 7 ft wide, 9 ft long, and 54 ft deep from the reactor room floor level. An offset area 18 ft deep from the reactor room floor level extends the basic cell to 7 ft wide by 12 ft long. A storage area, 2 by 7 ft by cell depth, is located at the end opposite the viewing windows. A recessed area located at the top of the cell is provided for installation of the in-cell crane.

Two large stepped plugs (58-in. diameter) are located in the cell roof. These plugs are large enough to allow the internal mechanism of the fuel handling machine or a primary sodium pump to be lowered into the maintenance cell. Within each of these plugs is a medium-sized plug (30-in. diameter) which is large enough to allow moderator elements to pass into the maintenance cell. Within each of the medium-sized plugs are two small plugs. One is the same size as a storage cell plug (6-1/2-in. diameter) and will support a fuel element and shield plug assembly. The second is slightly larger (7-in. diameter) and will permit passage of a fuel element and shield plug assembly into the maintenance cell. The cell roof is a rectangular plug (about 13 by 15 ft) that provides for removal of the in-cell crane as a unit.

Two 30-in.-diameter by 10-ft-deep wells are located in the floor of the cell. Drains to the radioactive liquid waste system are provided in the bottom of each well. Concrete, steel encased, shield plugs are provided at the top of each well.

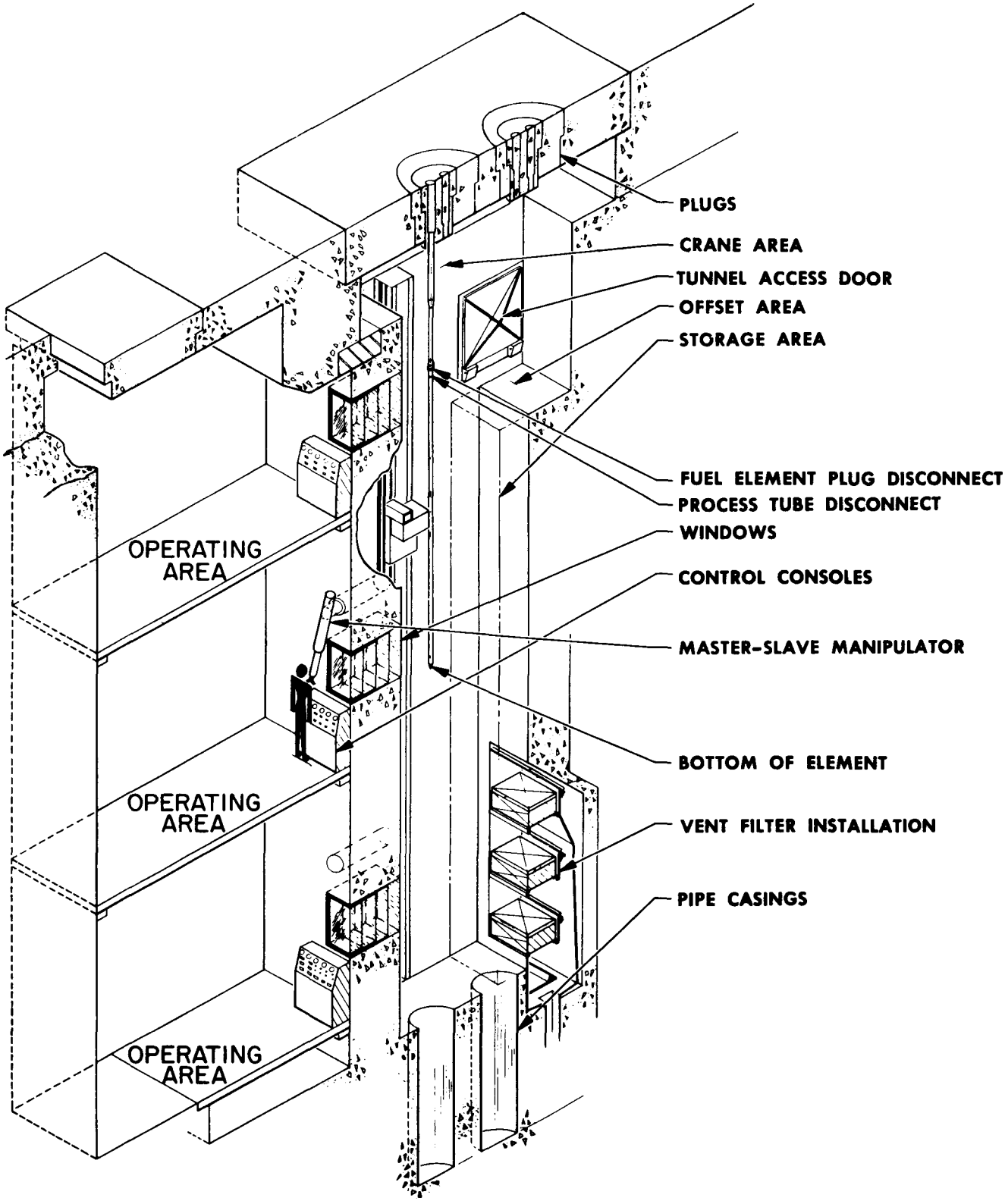

Figure 29. Maintenance Cell

One well is provided with a 50-mesh screen basket for recovering unclad fuel and other loose material from the floor of the maintenance cell. The other well is provided with a radioactive liquid waste shipping can attached to a filler funnel. When plugs and equipment are removed, the wells may be used as additional space into which long items may be lowered in order to better view their upper ends.

A tunnel access door seals off the cell from the tunnel that leads to a hatch under the decontamination room. This door incorporates a folding shelf which is used for conveyance of tools or equipment to and from the decontamination room.

Located in the wall opposite the lower viewing window is the vent filter installation. This installation is remotely changeable and will be serviced in its entirety from within the maintenance cell.

The operating area is 16 ft wide, 16 ft long and 51 ft deep from the reactor room floor level. The area is divided into three operating station levels by floors spaced 16-1/2 ft apart. The reactor room floor and the first two floors below are provided with 6-1/2-by 11-ft hatches for the removal of equipment from the operating area, or interchange of equipment between levels. Viewing windows to the maintenance cell are provided at all three levels, 5-1/2 ft above the floor.

A control console for control of in-cell equipment is provided for each of the three operating levels. The console at Station 1 (first floor below reactor room level) is the master control console and may delegate control of the in-cell equipment to either of the other two stations below. All consoles are mobile, and may be located at any position convenient to the operator.

The maintenance cell is equipped with the following major pieces of equipment.

1) One 3-ton in-cell hoist, capable of giving full in-cell coverage.

2) Three shielded viewing windows.

3) One pair of heavy-duty master-slave manipulators mountable through the operating face at any one of the three station levels

4) One tool positioner, mounted on vertical tracks on the west wall of the cell, and capable of being located at any cell depth by means of a ball screw.

5) One remotely operated servo-manipulator, mounted on a carriage which rides on vertical tracks on the east wall of the cell. The manipulator carriage is capable of being located at any cell depth by means of a ball screw.

6) An audio system with a microphone locatable at three different vertical positions in the cell, and speakers located at all three operating levels. The system can be controlled so that sounds within the cell can be located and transmitted to any one or all of the operating areas.

7) An in-cell monitor which consists of a beta and gamma detector of the ion chamber type in the cell and portable readout equipment in the operating area.

Several remotely operated tools have been designed for use in the maintenance cell. A gripping tool is furnished for use on the tool positioner. For working fuel elements, a set of small tools is provided for use with the master-slave manipulator and remotely operated manipulator. A similar set of tools is also provided for working on control rods. The remotely operated manipulator is also used for in-cell monitoring.

The cell is provided with a combined ventilation and inert gas atmosphere system. When any of the parts or access doors are opened, or when operations involving no hazards are performed in the cell, a high-volume ventilation system provides the cell with an air atmosphere. When irradiated fuel elements are handled in the cell, or when operation involving fire hazards is performed, a low volume vent and exhaust system and an inert gas system maintain an inert atmosphere of nitrogen at a pressure of 3/8-in. H_2O with oxygen concentration limited to 2% by volume. A cooling system is provided to limit the maximum ambient temperature in the cell to 150°F. Exhaust from the cell is passed through in-cell filters, and directed through final absolute filters to the stack, holdup decay tanks, or central ventilation exhaust system, as required by the radioactivity level of the gas.

The preoperational test of the maintenance cell has not been completed. However, all in-cell equipment has been tested and is considered operational. Testing of the system has resulted in executing the following steps toward optimizing its performance.

1) During in-cell handling of the reactor source, a radiation survey was made, and streaming of gamma through some lightly shielded areas of the viewing window was detected. This condition was rectified by packing lead wool into the offending areas.

2) While using the master-slave manipulator, it was noted that the in-cell mercury vapor lights were so positioned that the heat from them could melt the master-slave manipulator boots, and thus compromise the leak-tightness of the cell. Plans have been made to reposition these lights to eliminate this problem.

B. CLEANING CELLS

1. System Descriptions

The cleaning cells consist of four steel-lined wash cells approximately 40 ft deep. Three of the cell cavities are equipped with removable liners which enable the cells to be used for washing fuel elements and other small core components. The fourth cell is equipped with a removable liner for washing the pumps. A wash cell liner with larger-diameter adapter rings and guide vanes can be installed in the pump wash cavity to provide another fuel wash facility, if necessary. Fuel wash cells have cooling water jackets to remove decay heat from irradiated fuel elements. The cooling jackets have a capacity of 73,000 Btu/hr, which is based on the heat generated in a center element 10 hours after shutdown.

All of the washing cells have pipe connections providing steam, water, nitrogen, helium, vacuum, and vent services. A pressure-regulating valve reduces 150 psig steam to 15 psig steam for steam wash purposes. Steam flows up to 600 lb/hr are possible for cooling of fuel elements. The wash cell liners have corresponding pipe connections to extend the services into the cell interiors. The wash cells have a valve station from which all washing, drying, and purging operations can be performed. A vacuum of about 1-in. Hg is obtained by means of a steam jet ejector. Operations can be performed simultaneously in more than one cell if necessary.

Radiation shielding for the top of the wash cells is provided by steel-encased, stepped concrete plugs. In the case of the fuel wash cells, steel shot is used to fill the annular space between the plug and the fuel wash cell. Below

the plug, a steel plate serves as a seal to contain the shot just below and around the piping connections and between the wash cell and cavity liner. A cover plate is fastened over the fuel element shield plug to hold the element securely inplace during cleaning.

The cavity liners are fabricated from carbon steel and are galvanized for rust protection. The pump wash cell is carbon steel coated with a caustic- and radiation-resistant paint. The fuel wash cells are fabricated from Type 347 stainless steel. Fuel wash cells have an inner thimble of perforated stainless steel to permit retrieving of damaged or broken fuel elements.

Steam and contaminated materials washed off of components pass through the radioactive liquid waste drain piping to a combination direct contact condenser and transfer tank of 1000 gal capacity.

2. Performance History

Testing of the wash cells has shown some difficulties that have resulted in modifications to improve system performance.

a) The wash cell service connections were originally pipe unions. Limited working space in the wash cell cavities renders these unions unsatisfactory, due to alignment problems; therefore, the unions were replaced with wire-braided steam hose.

b) The steam nozzles had a tendency to become plugged with pipe scale, metal turnings, etc. A 100-mesh strainer was installed in each of the fuel wash cells to strain out the foreign matter.

c) The original steam valve could not be adjusted to maintain a continuous flow of steam at low pressures, so it was replaced by an improved control valve. This has already demonstrated satisfactory operation.

Testing of the wash cells continues. More adjustments and modifications will be made before near-optimum performance is attained.

C. FUEL HANDLING MACHINE

1. System Description (Figure 30)

The fuel handling machine consists of a shielded cylinder with two internal hoists and grapple mechanisms to raise and lower core components, a gas

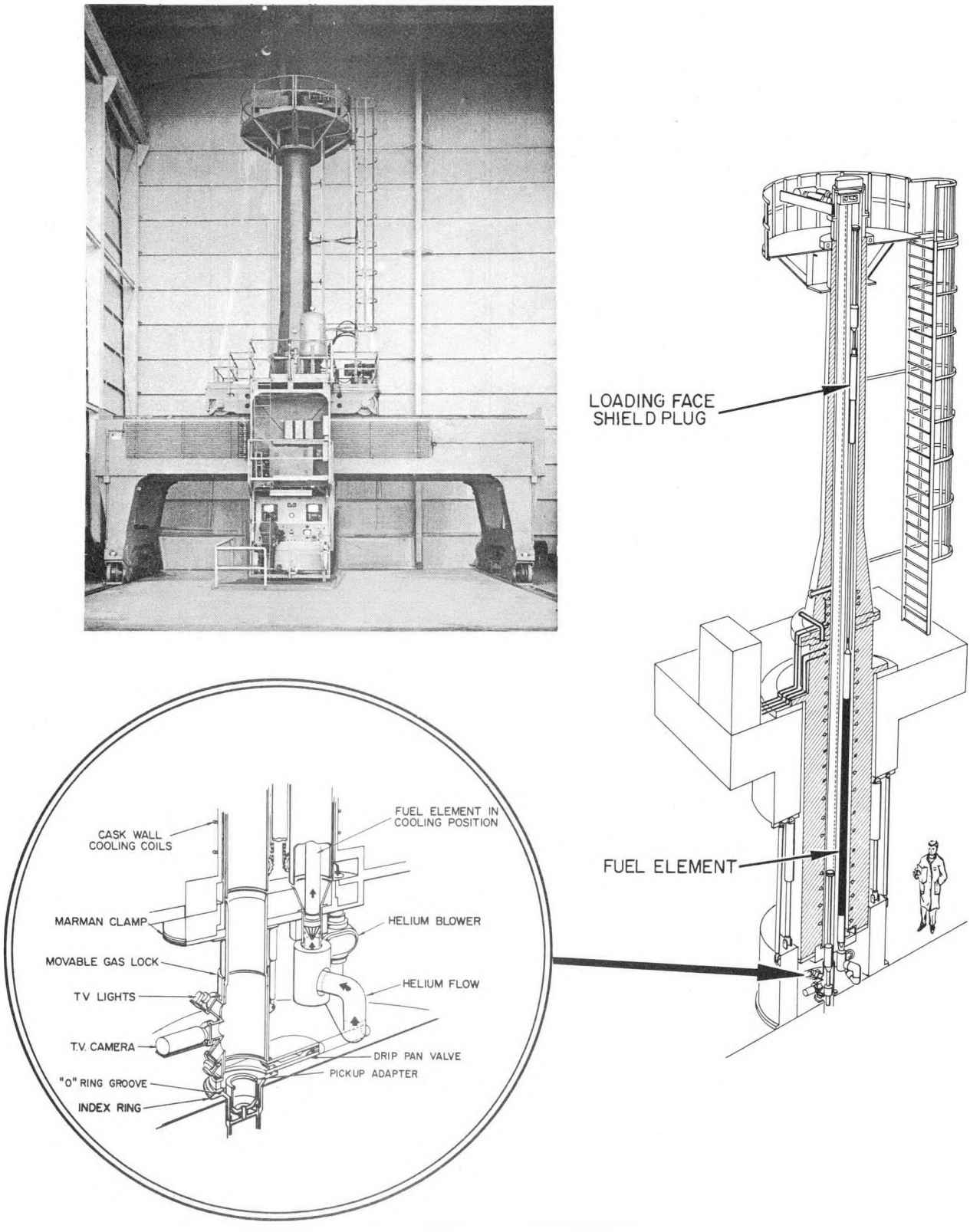

Figure 30. Fuel Handling Machine

lock to prevent the escape of any radioactive gases to the high-bay area, and an indexing device for proper positioning of the fuel handling machine over the reactor core and storage cells. The machine is supported and transported by a trolley which rides on a gantry crane. Maximum speed of travel of the gantry on its rails is 80 ft/min.

The machine shielding consists of lead shot confined between steel walls of the machine body. The greatest shield thickness surrounds the lower section of the machine. The shielding around the upper section is tapered. A movable lead-shot-filled skirt provides shielding whenever an element is entering or leaving the machine. The skirt is raised and lowered by four hydraulic cylinders. Protection against free fall is provided by flow control valves on the cylinder hydraulic fluid connections. Handling machine shielding is designed to limit radiation to the operator to 7.5 mr/hr during fuel transfer.

Internally there are two grapples, each suspended between two continuous roller chains. Each grapple is capable of picking up fuel elements (and similar items) when it is rotated into the pickup position directly above the port in the bottom of the machine. When the machine is traveling, the fuel element is carried in the position 180° away from the pickup position, and the empty grapple is kept in "traveling" position above the port at the bottom of the machine. Thus, only one element can be in the machine while it is moving. As a safety measure, grapples can be released only when they are in the port at the bottom of the machine. Each grapple operates in a guide tube which runs the full height of the machine. The tubes are continuous except for two lengthwise slots. The chains which support the grapples are outside the guide tubes, and a bar between the chains passes through the slots in the guide tube to support the grapple inside the tube. The grapples are provided with grapple fingers that are normally operated by means of the air cylinders located on the lower end of the gas lock. The grapple fingers may also be operated by applying helium pressure to the grapple center body, which actuates an internal piston that releases the grapple fingers.

Two hoists, one for each grapple, are located at the top of the machine. Each hoist mechanism is outside the machine, and the chain sprocket drive shaft passes through a seal in the machine body. A variable-speed electric motor supplies power for the hoist mechanism. The motor is equipped with a brake for quick stopping. Power is transmitted through a slip clutch, gearbox, and torque load cell. In case of motor failure, an auxiliary motor drive system can

be energized. A limit switch assembly with a selsyn and counter is driven from the output side of the gearbox. The limit switches stop the grapple at various predetermined positions. The selsyn and its mate on the control panel are used to drive a counter which indicates the grapple position to the operator. The hoist mechanism counter is mechanically driven and is used to check the operation of the selsyn-driven counter on the control panel. A torque load cell is connected to the slow-speed shaft of the gearbox. This cell indicates to the operator which load is on the grapple.

There is a remote console which may be used to operate the gantry, trolley, and movable shield on the fuel handling machine at distances up to 90 ft from the machine. However, this console, which was designed for operating the machine remotely during moderator handling operations, is limited to the operations stated above. Installing this portable console to the gantry and trolley consists only of connecting the control cable to the handling machine.

At the bottom of the machine are located the gas lock, helium blower, photoelectric cell, gate valve, and three television cameras. One camera is for viewing the fuel; the other two, one of which is a spare, are for indexing. As the machine is positioned near a given station, the downward-facing television camera transmits a picture which shows the operator how accurately the machine is positioned. The gas lock sleeve is normally carried about 4 in. above the floor. When the machine is positioned, this sleeve can be driven down to make a seal between the machine and the index ring. (The index ring is manually positioned and sealed to the reactor face prior to positioning the handling machine.) A vacuum pump and helium supply are provided to evacuate the gas lock and fill it with helium. A photoelectric cell, at the bottom of gas lock sleeve, "sees" if anything is left attached to the grapple when it is in the travel position. A gate valve is moved by an air cylinder to a position underneath the gas lock sleeve to seal the chamber and to catch any debris that may fall.

A cooling system is built into the fuel handling machine to provide cooling for the contained fuel element. This system consists of a helium blower, which is located outside the machine body at the bottom but inside the movable shield, with a nozzle protruding upward into the machine. After a hot fuel element has been raised into the machine and rotated 180° from the pickup position, it is lowered to a position directly above the blower nozzle. Helium is drawn from the machine body and blown upward through the fuel element. The heat

picked up by the helium is transferred to the machine body walls where it is dissipated by means of cooling coils in the upper and lower body. Two separate pumps circulate water through the upper and lower body coils and through a finned heat exchanger. A fan circulates air over the exchanger to exhaust the heat to the atmosphere.

2. Performance History

The fuel handling machine has performed satisfactorily since being put into service. The following modifications have been made to further optimize its performance.

a) A "dead man's switch" has been added to the east side of the control console that will prevent grapple movement unless the operator keeps his foot on the switch button. The primary purpose of this switch is to stop any vertical movement of core elements in case something should happen to the operator.

b) Better communication between the console cab operator and the control room operator has been effected by the addition of phone jacks in the cab which are tied into the communications system. This allows the operator to stay in direct contact with the control room while occupying the console cab. Prior to this modification, the closest phone jacks were near the east and west walls; and use of these phone jacks entailed either leaving the console or using headset extension cords that were so long that communication was garbled and attenuated.

c) A reactor short-period alarm and a reactor neutron monitoring circuit have been installed in the control console. This precaution, by making the fuel handling machine operator more cognizant of core conditions, will minimize the possibility of inadvertent reactor criticality due to insertion of reactivity or withdrawal of poison via the fuel handling machine.

d) The vacuum connection for purging the gas lock was relocated from the top of the drip pan housing to a light port on the gas lock. This was done to facilitate purging of the gas lock and to prevent damage to the drip pan gate.

e) Mirrors were added to both sides of the console cab so that the operator could see what was ahead of the cab without moving away from the console.