BNL 8808

LIQUID FUEL SYNTHESIS USING NUCLEAR POWER IN A MOBILE ENERGY DEPOT SYSTEM

by

M. Beller and M. Steinberg

Brookhaven National Laboratory
Upton, L.I., New York

January 1965

Work Performed Under the Auspices of the
U.S. Atomic Energy Commission

LIQUID FUEL SYNTHESIS USING NUCLEAR POWER IN A MOBILE ENERGY DEPOT SYSTEM

by

M. Beller and M. Steinberg
Brookhaven National Laboratory
Upton, L.I., New York

January 1965

The problem of providing large masses of liquid fuels for modern armies, which are dependent upon internal combustion engine-driven vehicles, has received much recent attention. The concept of producing these fuels in the field using nuclear power generation has also been the subject of many studies. A large number of potential fuels were evaluated, and ammonia has apparently been selected as the fuel of choice.[1,2]

The choice of fuel is mainly dictated by the consideration of raw material availability in the field. Ammonia can be produced from atmospheric nitrogen and hydrogen obtained by the electrolysis of water. Carbon-containing fuels were summarily discarded for potential use based upon the lack of assurance that organic materials would exist in the field, and on the basis that insufficient carbon is present in the air. Actually, the air contains an unlimited supply of carbon provided that it

can be feasibly extracted and converted to fuel. CO_2 can be extracted from air using conventional adsorption equipment, and reacted with H_2 produced by the electrolytic dissociation of water to form methanol.

$$3H_2O(\ell) \rightarrow 3H_2(g) + 3/2O_2(g) \quad (1)$$

$$CO_2(g) + 3H_2(g) \rightarrow CH_3OH(g) + H_2O(g) \quad (2)$$

Both of these reactions have been applied in well-known technologically developed processes.

Methanol has the following advantages over ammonia as a fuel.

1. Higher heat of combustion:

$$CH_3OH(\ell) + 3/2O_2(g) \rightarrow CO_2(g) + 2H_2O(g) + 8645 \text{ BTU/lb} \quad (3)$$

$$2NH_3(\ell) + 3/2O_2(g) \rightarrow N_2(g) + 3H_2O(g) + 7450 \text{ BTU/lb} \quad (4)$$

   Thus, methanol has a 16% greater heating value advantage over ammonia.

2. Methanol is a proven fuel for use in internal combustion engines. Redesign or development of existing internal combustion engines would be unnecessary,[3] whereas it is necessary in the case for ammonia.[2]

3. Methanol exists as a liquid at ambient conditions and required no change in existing storage equipment. Ammonia has a vapor pressure of 130 psia at 20°C, and

thus requires the use of pressurized or insulated, refrigerated tanks for storage as a liquid.

4. Ammonia is difficult to handle, easily vaporizes to a toxic gas, and can cause skin burns.
5. Ammonia is corrosive to any copper-bearing material or alloy in the presence of moisture.
6. Methanol is normally neither toxic nor corrosive.

The requirements for making methanol are almost identical to those for ammonia.[5] The main power requirement for the entire synthesis is the generation of hydrogen, just as in the case of ammonia. The conversion of nuclear heat to dc electric power for electrolytic dissociation of water is about 20% efficient, and present electrolytic hydrogen cells are about 70% efficient, giving an overall efficiency of 14%.

For illustrative purposes, a set of requirements is presented for production of 1000 gallons per day of methanol.

Reactions:

$3H_2O(\ell) \rightarrow 3H_2(g) + 3/2O_2(g)$ electrolysis $\Delta H = +\ 68{,}320$ cal/mole

$3H_2(g) + CO_2(g) \rightarrow CH_3OH(g) + H_2O(g)$ catalysis

$\Delta H = -\ 12{,}100$ cal/mole

Electric Power Required:

P_1 = dc power for electrolysis = 1.3 MW

P_2 = Power for compression of $CO_2 + H_2$ to 3000 psi = 0.1 MW

P_3 = Power for air pressure drop of 20 psi	= 1.1 MW
P_4 = Power for auxiliary equipment	= 0.2 MW
Total electrical power	= 2.7 MW(ϵ)
Total nuclear heat = 2.7/0.2	=13.5 MW(t)

The air required to produce methanol from 0.035% CO_2 in the atmosphere is 148,000 SCFM. It is assumed that the air is saturated with water at 25°C. To remove the water, which poisons the CO_2 adsorbent, by preadsorption alone would require impractically large beds. However, the adsorption of CO_2 is a strong function of pressure. Therefore, by compressing the air, and maintaining constant temperature by simultaneous cooling to remove heat of compression, the capacity of an adsorbent for CO_2 is increased; at the same time, because of the increased pressure, water condenses out of the air, thus reducing the size of the preadsorbent bed. For example, at the given conditions for producing 1000 gal/day of methanol, 13,000 lb/hr of water vapor must be removed from the incoming air. Compression to 300 psia reduces this amount to 650 lb/hr which must be removed by adsorption; the remaining 12,350 lb/hr condenses out in the compressor. This appreciable quantity of water extracted from the air indicates that in areas where little ground water is available, it may be feasible to extract it from the air. For example, 600 lb/hr of water is required to produce 1000 gal/day

of methanol. To produce this quantity, a minimum concentration of 0.14% water in air is necessary to yield a partial pressure of 1.06 mm Hg. The lowest air temperature for this condition is -16.7°C, the saturation temperature for the above partial pressure of water.

Fig. 1 graphically illustrates the effect of pressure upon adsorbent bed volumes for removal of both CO_2 and H_2O. It is assumed that CO_2 will be adsorbed using 5A molecular sieves, and H_2O will be removed with 13X molecular sieves, since these adsorbents have the highest capacity for the respective components. Fig. 1 shows that 300 psia is an optimum operating point for minimizing bed size, although one could operate as low as 135 psia with a reasonable increase in adsorbent volume. However, the trade-off between bed size and compressor capacity requires a detailed design study; it suffices to say that the pressures and adsorbent volumes required are reasonable and feasible.

Assuming 300 psi operation, the total volumes of adsorbent required to remove both CO_2 and water vapor, using 2 beds for CO_2 and 2 beds for water (while one bed is adsorbing, the other is desorbed) is 380 ft^3. The H_2O beds, which are sized for the worst possible design condition of 100% relative humidity @ 25°C,

are both 2.5 ft high, 8 ft diameter, and the CO_2 beds are 3 ft high, 8 ft diameter. They can operate either horizontally or vertically, and their total weight (including pressure vessels and adsorbent) is estimated at 30,000 lbs, which is the maximum permissible loading per skid for purposes of portability. This weight figure might even be lowered in view of recent development work on a new selective chemical adsorbent[4] for CO_2 which appears to have much higher capacity for CO_2 than other substances and is furthermore unaffected by the presence of water vapor. However, the following discussions are based on the use of molecular sieve adsorbents, whose properties are well known.

The air for CO_2 adsorption may be available from the power generation equipment tied to the nuclear reactor. Fig. 2 illustrates an open cycle power generation system. The reactor coolant heat is transferred to incoming air which is at a pressure of 300 psi in a heat exchanger. The heated air is then expanded in a turbine, which drives a compressor and generator, and the expanded air is then released to the atmosphere. The compressor continually supplies atmospheric air at 300 psi for the turbine. By cooling the air which leaves the compressor to 25°C, the necessary air is made available for CO_2 adsorption. The air could then be regeneratively

heated against the compressor exhaust, then by reactor coolant, and fed to the turbine. The hot turbine discharge is used to desorb CO_2 from the adsorbent beds; alternatively it may be convenient to use H_2 from the electrolytic cells to remove CO_2 and produce the synthesis gas for the methanol converters.

It should be noted that the addition of adsorbent beds does not necessarily indicate a net increase in weight for the overall system. These additions must be weighed against other equipment which would be required for extraction of nitrogen from the air for use in ammonia synthesis, e.g., blowers and air separation equipment. The 16% heating value of methanol over ammonia must also be considered here in reducing size and weight of equipment.

Fig. 6 illustrates schematically the procedure[6] for methanol production. CO_2 and H_2 are compressed to 200 atm, heated to 300°C, and reacted in chambers using catalysts composed of metal oxide mixtures; for example, zinc oxide with 10% chromium oxide. The reaction is self-sustaining and heat is removed to maintain the 300°C reaction temperature. 15 to 25% of the CO_2 is converted during each catalyst pass. The methanol-water mixture is condensed, the pressure released, and the cooled liquid is separated by distillation to produce methanol. The residual gases are then returned to the system for reaction.

An alternate method of removal of CO_2 from air using low temperature condensation may be possible, but requires a complete cycle study to ascertain power and equipment requirements.

Summing up the above discussion, it appears that the advantages of higher energy output and ease of handling of methanol, compared to ammonia, indicate that closer study be given to the methanol synthesis in a mobile energy depot system. The CO_2 adsorption would appear particularly attractive in polar regions, where low ambient temperatures would improve adsorbent weight loadings. It may even be possible to carry out a modified Fischer-Tropsch synthesis of gasoline using CO_2 and H_2, thus resulting in increased energy output per unit weight of fuel produced. The use of either methanol or gasoline circumvents the use of two different engine systems, which are not interchangeable, for military vehicles.

REFERENCES

1. Nucleonics Week, p. 2, (September 24, 1964).

2. Chem. & Eng. News, 42, No. 39, 54 (September 28, 1964).

3. Union Carbide Corp. Private communication,(November 12, 1964).

4. Teller, A. J., Cooper Union, New York, Private communication, (September 24, 1964).

5. Kobe, K. A., "Inorganic Process Industries," Macmillian Co., 298 (1948).

6. Groggins, P. H., "Unit Processes in Organic Synthesis," 3rd Edition, McGraw-Hill, 542 (1947).

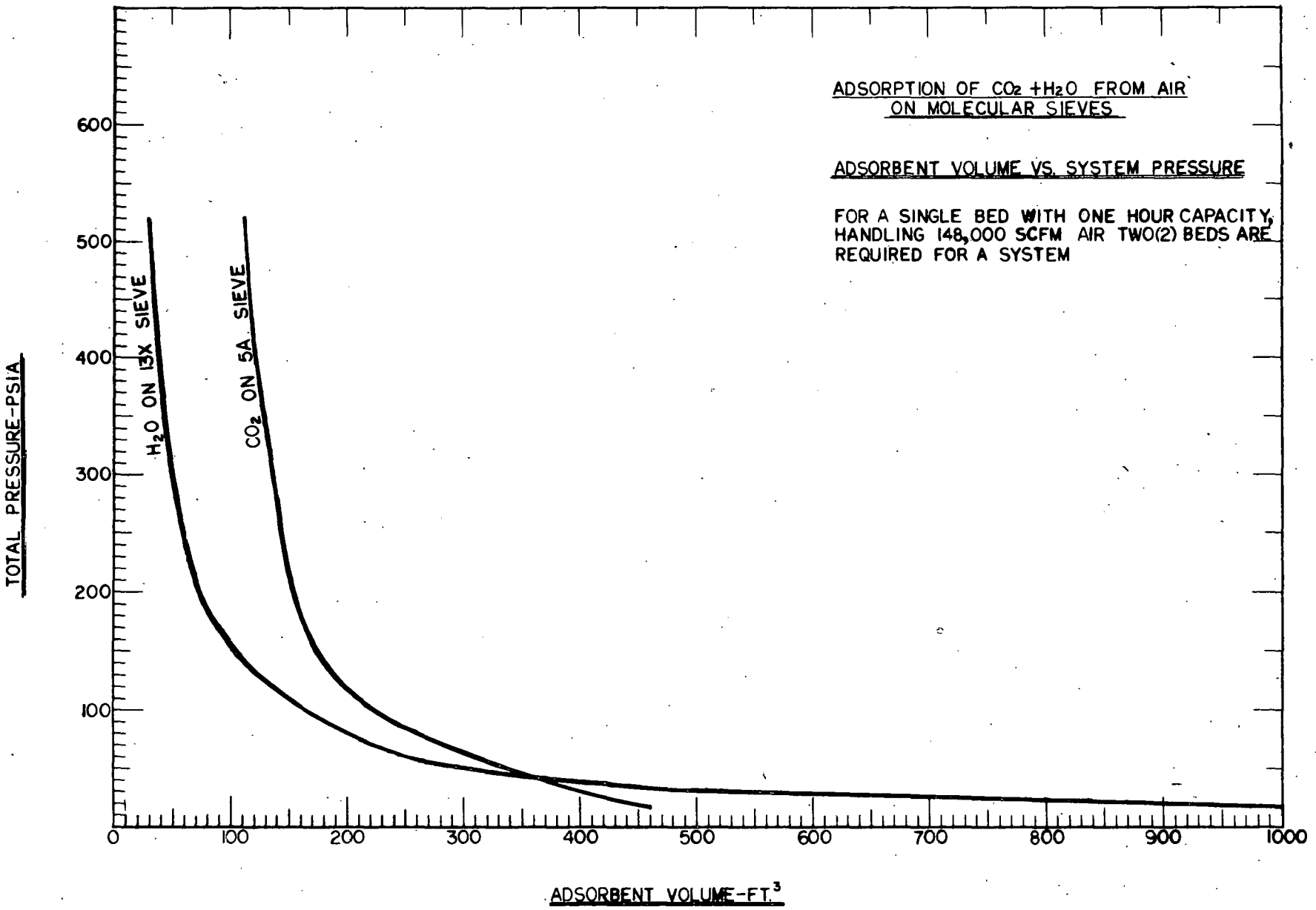
ADSORPTION OF CO_2 + H_2O FROM AIR ON MOLECULAR SIEVES
ADSORBENT VOLUME VS. SYSTEM PRESSURE
FOR A SINGLE BED WITH ONE HOUR CAPACITY, HANDLING 148,000 SCFM AIR TWO(2) BEDS ARE REQUIRED FOR A SYSTEM
H_2O ON 13X SIEVE
CO_2 ON 5A SIEVE
TOTAL PRESSURE-PSIA
600
500
400
300
200
100
0
100
200
300
400
500
600
700
800
900
1000
ADSORBENT VOLUME-FT.^{3}

FIGURE 1

METHANOL SYNTHESIS IN A NUCLEAR MED SYSTEM

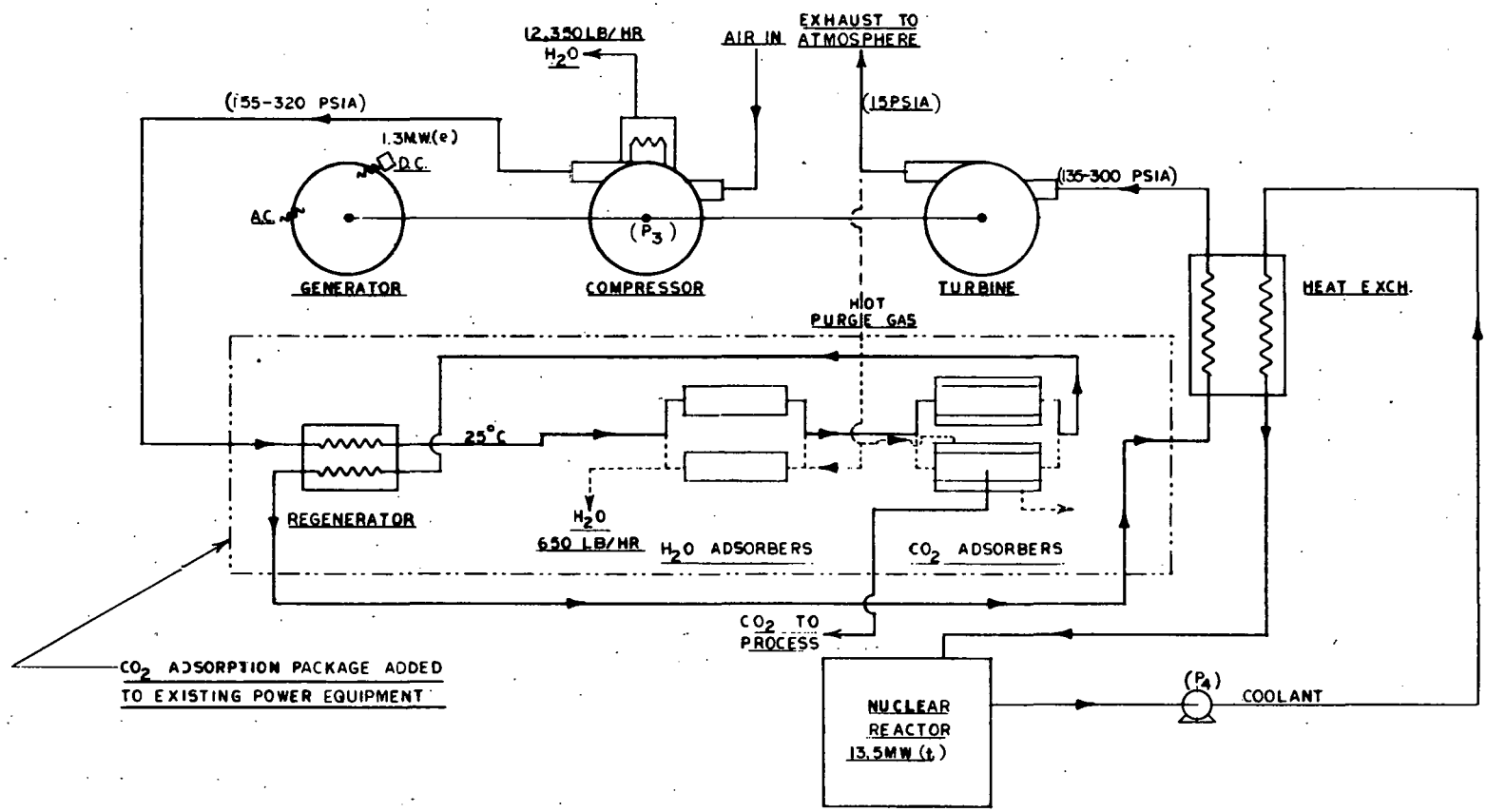

OPEN CYCLE POWER SYSTEM INCORPORATING CO_2 ADSORBERS

FIGURE 2

METHANOL SYNTHESIS IN A NUCLEAR MED SYSTEM

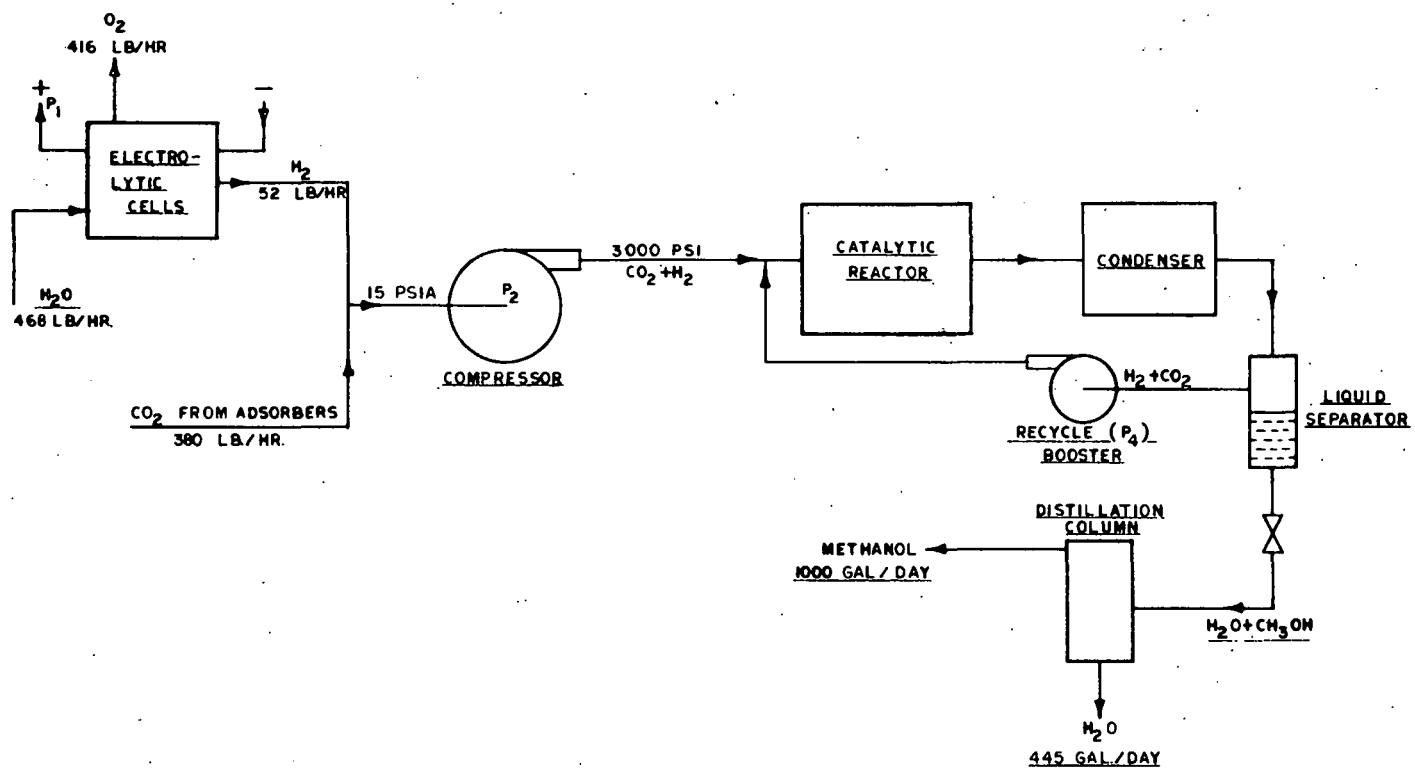

METHANOL PRODUCTION CYCLE

FIGURE 3