52

MAY 25 1963

MASTER

Atomic Energy of Canada Limited

# DIFFUSIONLESS BONDING OF ALUMINUM TO TYPE 304 STAINLESS STEEL

CRE-1162

by

R. D. WATSON

Chalk River, Ontario

March, 1963

AECL-2241

**DISCLAIMER**

**Portions of this document may be illegible in electronic image products. Images are produced from the best available original document.**

AECL-2241

ATOMIC ENERGY OF CANADA LIMITED
Chalk River Nuclear Laboratories

Applied Engineering Development Branch

# DIFFUSIONLESS BONDING OF ALUMINUM TO TYPE 304 STAINLESS STEEL

AECL-2241

by

R. D. Watson

Chalk River, Ontario
March, 1963

# DIFFUSIONLESS BONDING OF ALUMINUM TO TYPE-304 STAINLESS STEEL

by

R.D. Watson

## SYNOPSIS

High strength diffusionless bonds can be produced between 1S aluminum and oxidized 304 stainless steel by hot pressing and extrusion bonding. Both the hot pressing and extrusion bonding techniques have been developed to a point where consistently good bonds can be obtained. Although the bonding is performed at elevated temperatures (about 510°C) a protective atmosphere is not required to produce strong bonds.

The aluminum-stainless steel bonded specimens can be used to join aluminum and stainless steel by conventional welding. Welding close to the bond zone does not appear to affect the integrity of the bond.

The extrusion bonding technique is covered by Canadian patent 702,438 January 26, 1965 and the hot press bonding technique by Canadian patent application 904,548 June 6, 1964.

Chalk River Nuclear Laboratories

March, 1963

AECL-2241

# TABLE OF CONTENTS


| | | Page |
|---|---|---|
| 1. | Introduction | 1 |
| 2. | Equipment for Extrusion Bonding | 1 |
| 3. | Procedure | 3 |
| | 3.1 Extrusion Bonding | |
| | 3.2 Hot Press Bonding | |
| 4. | Test Specimens | 7 |
| | 4.1 Extrusion Bonding | |
| | 4.2 Hot Press Bonding | |
| 5. | Results and Discussion | 8 |
| | 5.1 Hot Press Bonding | |
| | 5.1.1 Deformation of Tapers During Pressing | |
| | 5.1.2 Extent of the Bond | |
| | 5.2 Extrusion Bonding | |
| 6. | Conclusions | 18 |
| 7. | Bibliography | 19 |

## LIST OF FIGURES


| | | Page |
|---|---|---|
| Figure 1 | Details of Test Apparatus | 2 |
| Figure 2 | Details of Specimen Holder | 3 |
| Figure 3 | Cladding Sequence | 4 |
| Figure 4 | Tube Surface Before and After Removing Shim Stock | 5 |
| Figure 5 | Hot Press Bonding Specimen in Place on 1S Aluminum Disc | 6 |
| Figure 6 | Hot Press Bonding Specimen in Place on 1S Aluminum Plug in Restraining Die | 7 |
| Figure 7 | Types of Tapered Specimens | 8 |
| Figure 8 | Cross-sections of Hot Press-Bonded Specimens Showing Distorted Tapers | 10 |
| Figure 9 | Cross-sections of Hot Press-Bonded Specimens | 11 |
| Figure 10 | Hot Press-Bonded Specimen After Machining to Size for Tensile Test | 12 |
| Figure 11 | Arrangement for Tensile Testing of Hot Press-Bonded Specimen | 13 |
| Figure 12 | Hot Press-Bonded Specimen After Tensile Test | 13 |
| Figure 13 | Extrusion-Bonded Specimen With and Without End Fitting | 16 |
| Figure 14 | Extrusion-Bonded Specimen After Pressure Testing at 2400 $lb/in^2$ Gauge | 16 |
| Figure 15 | Extrusion-Bonded Specimen After Pressure Testing at 1700 $lb/in^2$ Gauge | 17 |
| Figure 16 | Aluminum-Stainless Steel Interface of Specimen 100S | 17 |

## 1. INTRODUCTION

Oxides form on most metals when they are heated in air at elevated temperatures. Some oxides are thick and loosely adherent, some are thin, continuous and tightly adherent, and some are not continuous. A thin, tightly adherent, continuous oxide layer will form on stainless steel and Zircaloy-2 when they are heated in air provided that certain precautions are taken in the preparation of the surface.

A good bond between aluminum and oxidized metals such as uranium, Zircaloy-2 and stainless steel can be made by extruding aluminum against the oxidized surface of these metals providing the oxide layer on the metal is continuous and tightly adherent[1] [2]. The oxide layer performs two functions; it provides a surface that bonds well to aluminum and it acts as a diffusion barrier to the formation of brittle intermetallics[2] that could form during the bonding operation. This type of bond cannot be made with mild steel because of the poor bond between the oxide layer and the base metal.

In bonding aluminum to an oxide layer on stainless steel it is believed that the oxidized surface of the metal must come in contact with fresh unoxidized aluminum before a bond can be established. Two methods of accomplishing this have been devised; the first consists in pressing a tapered oxidized surface into a slug of aluminum, the second in extruding aluminum from a die against the moving oxidized surface of stainless steel.

## 2. EQUIPMENT FOR EXTRUSION BONDING

The extrusion apparatus is shown in Figure 1. The die container is supported by the block which is supported by four columns, one at each corner. Transite, 1/2 in. thick, is used as insulation between the block and the columns. The block and die container are held together by a dovetail key. A die insert is threaded into the bottom of the container. The outside surfaces of the die container and block are insulated by rings and sheets of transite.

The container is heated by 6 - 250 W cartridge type heater elements. The block is heated by 1 - 1000 W heater element fastened to the perimeter of the block. The temperature is controlled by a Brown controller operating in conjunction with a thermocouple connected to the die insert.

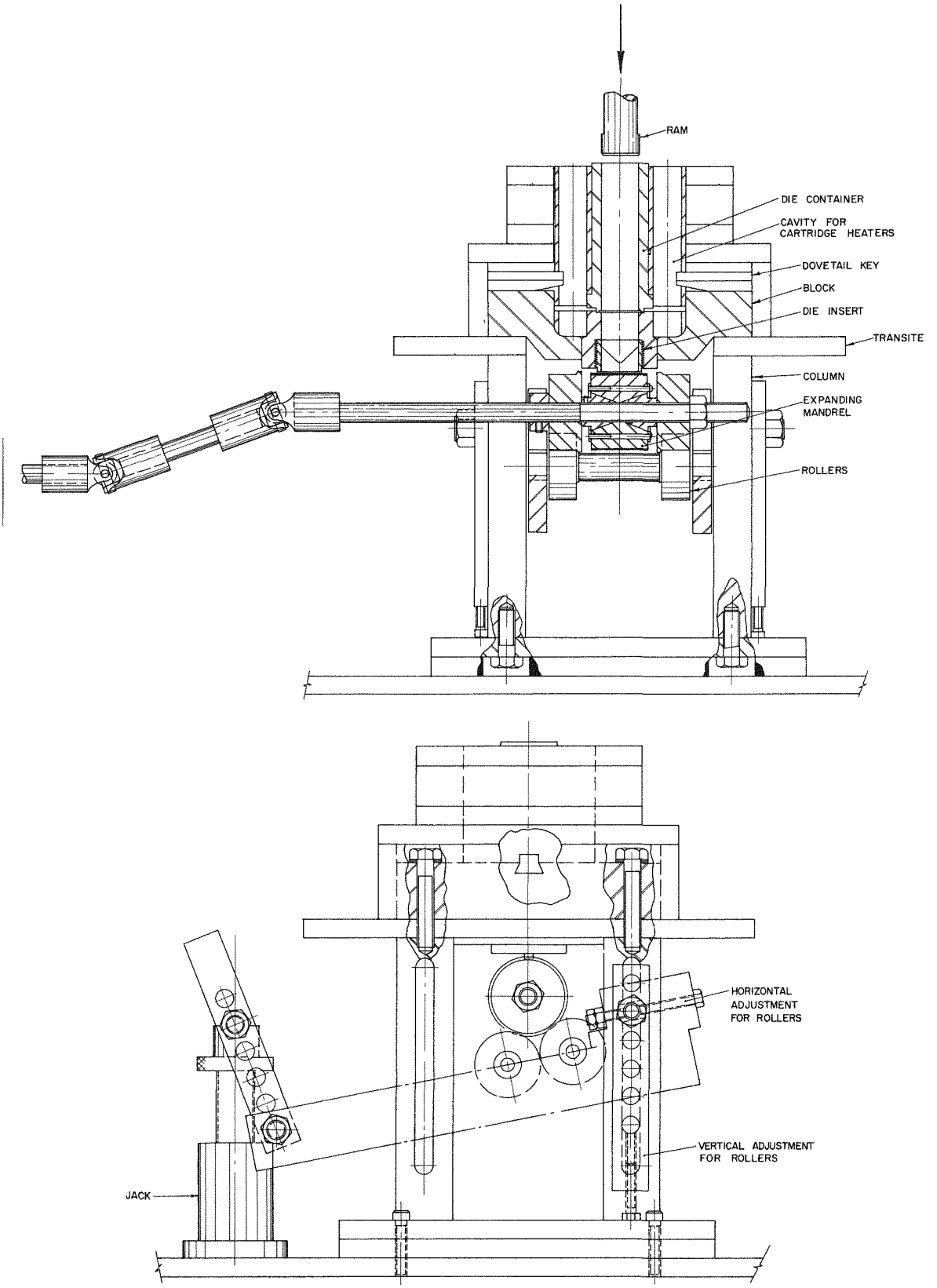


FIG. 1 DETAILS OF TEST APPARATUS

The test specimen or tube is fastened to the drive shaft by an expanding mandrel. Rollers mounted on the drive shaft at both ends of the tube are supported by rollers connected to the adjustable cradle shown below the die in Figure 1. The cradle is pivoted at one end and can be raised or lowered by a jack at the opposite end. The drive shaft is rotated by a high torque variable speed drive unit through a flexible coupling and two universal joints.

A 1-1/32 in. diameter ram connected to a 150 ton hydraulic press is used to force the aluminum through a rectangular orifice 1/8 in. x 1 in. in cross-section, to the surface of the specimen.

## 3. PROCEDURE

### 3.1 Extrusion Bonding

The die container is loaded with 15/16 in. diameter 1S aluminum billets. The die equipment is heated to 496°C. The test specimen is mounted on the drive shaft as shown in Figure 2 and then heated in an electric furnace at 454°C or 510°C for 20 to 60 minutes. The test specimen is then placed in position

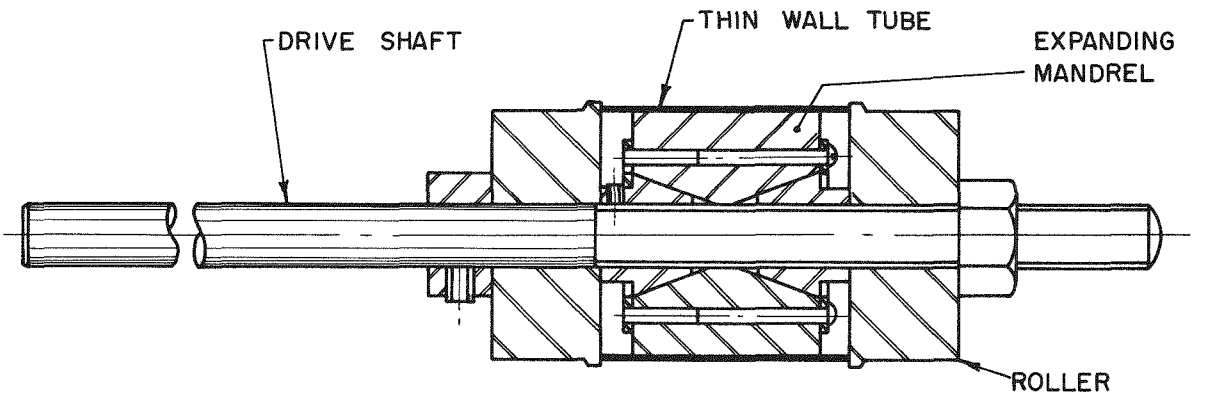


FIG. 2
DETAILS OF SPECIMEN HOLDER

on the rollers below the die as shown in Figure 1. A piece of steel shim stock is placed between the tube and the die snout as shown in Figure 3A. The cradle is raised until the shim stock is just touching the snout of the die as shown in Figure 3B. Ram pressure of approximately 24,000 lb/in$^2$ gauge is applied to the aluminum and the drive shaft is rotated as soon as the aluminum appears at the exit of the die orifice. When the tube has rotated to the position shown in Figure 3C the aluminum has reached the 'V' portion of the shim stock and is beginning to stick to the exposed stainless steel surface.

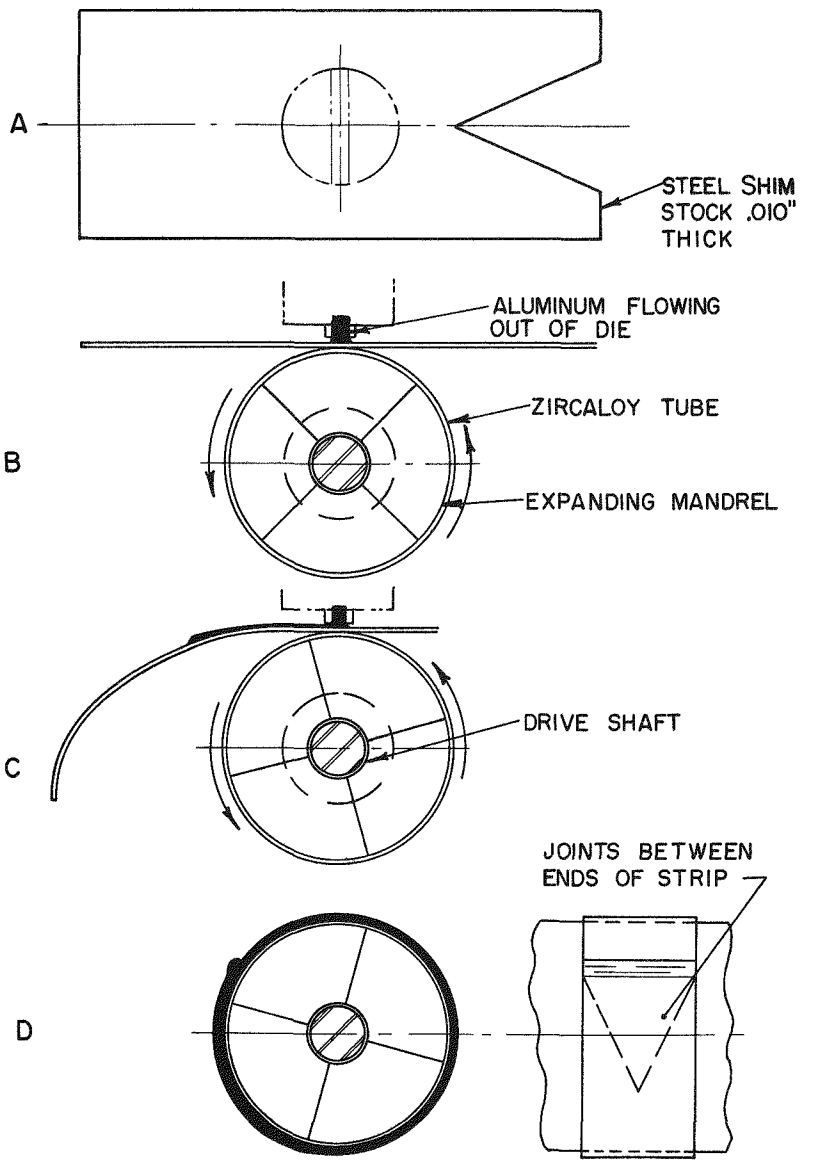


FIG. 3
CLADDING SEQUENCE

A short time later the shim stock has taken the position shown in Figure 4A and can be removed by lifting it from the lower end to give a leading edge as shown in Figure 4B. The height of the cradle is adjusted manually to provide a smooth steady flow of aluminum from the orifice to the test specimen.

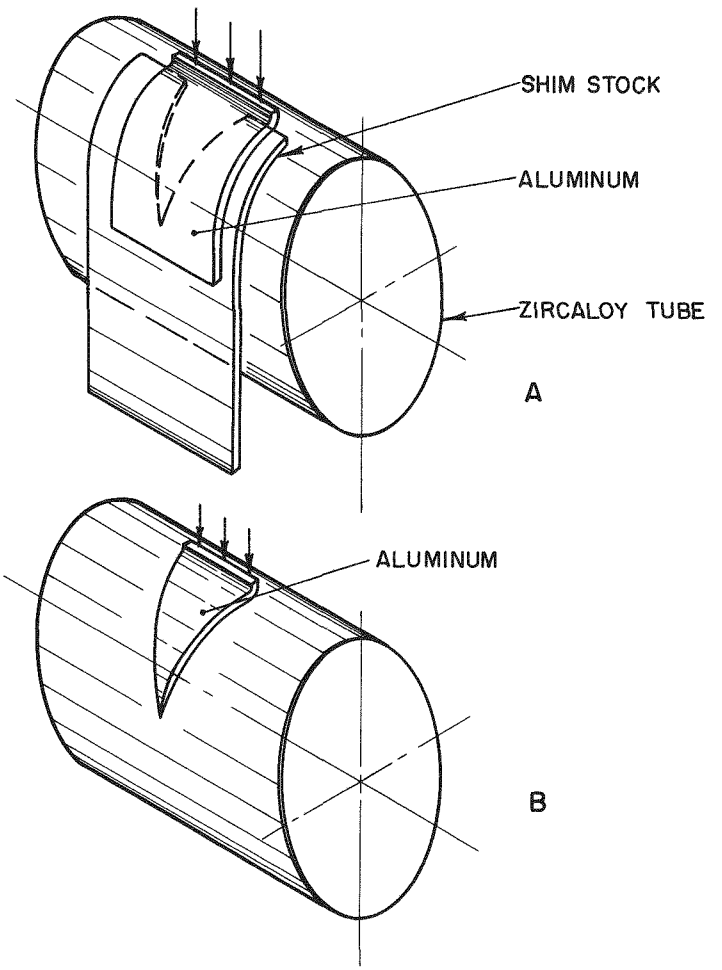


FIG. 4
TUBE SURFACE BEFORE AND AFTER REMOVING SHIM STOCK

The drive shaft is allowed to rotate until the desired thickness of aluminum (at about 3/64 in./revolution) has been applied to the tube. Figure 3D shows the overlap between the leading and trailing edge after cladding for about 1-1/4 revolutions. After the strip has been applied the drive motor is stopped and the extrusion pressure

is removed. The jack is lowered so that the rollers on the drive shaft are no longer in contact with the rollers on the cradle. The ram pressure is again applied and aluminum is extruded until the clad tube is at least 1/4 in. from the die snout. The connecting link between the tube and the die is broken with a cold chisel and the drive shaft is removed and allowed to cool. The aluminum left at the exit of the die is planed off until it is flush with the bottom surface.

## 3.2 Hot Press Bonding

The stainless steel tubes and 1S aluminum discs were preheated in air at 510°C for 30 minutes. The tubes were positioned on the aluminum discs as shown in Figures 5 and 6 and then pressed into the aluminum to the full depth of the taper.

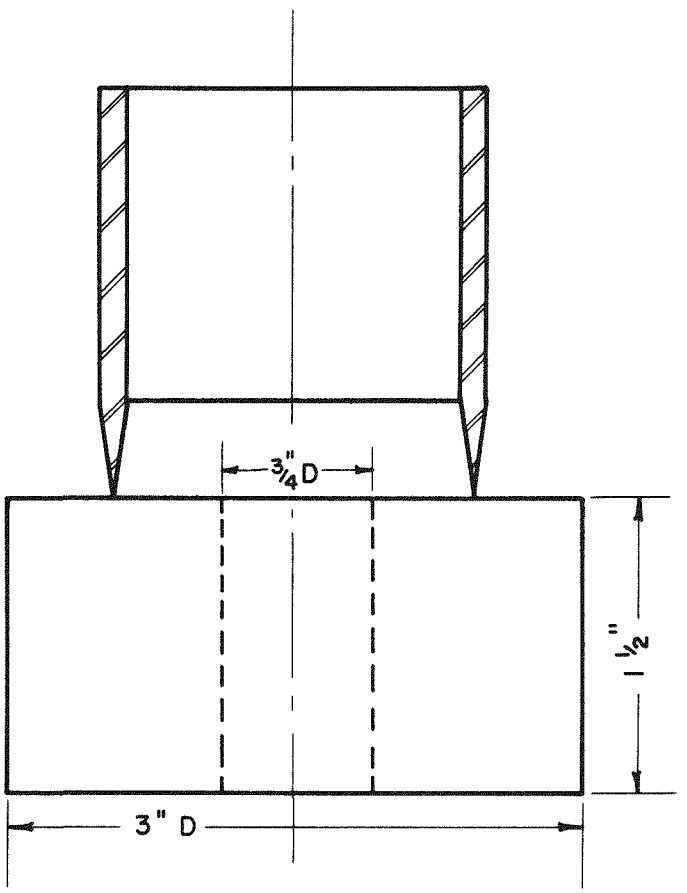


FIG. 5

HOT PRESS BONDING SPECIMEN IN PLACE ON 1S ALUMINUM DISC

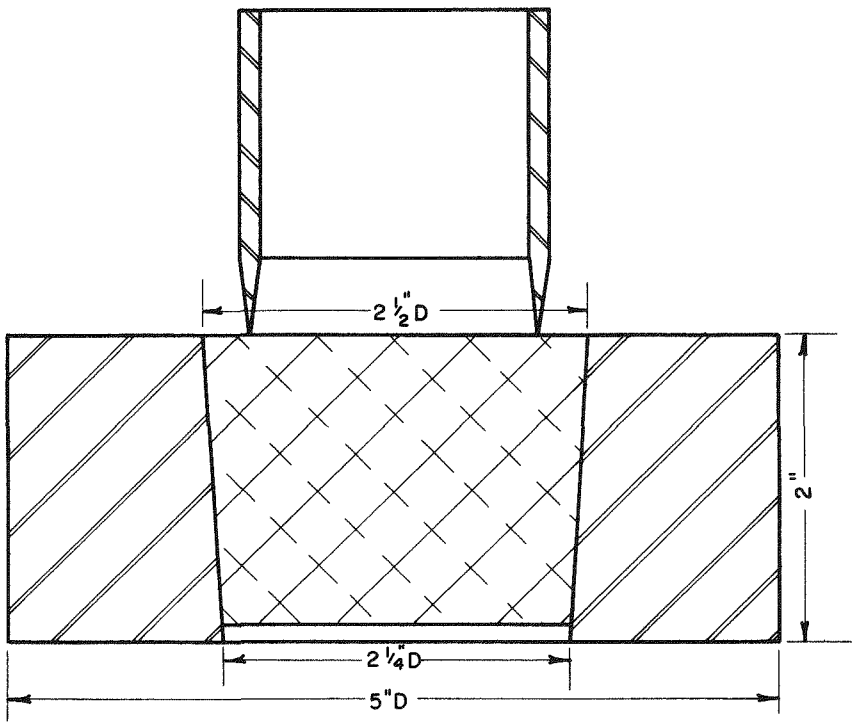


FIG. 6

HOT PRESS BONDING SPECIMEN IN PLACE ON 1 S ALUMINUM PLUG IN RESTRAINING DIE

## 4. TEST SPECIMENS

### 4.1 Extrusion Bonding

The specimens were made from 2 in. OD x 1/8 in. wall type 304 stainless steel tubing and cut to a length of 2-1/8 in. Some of the specimens were polished on the outside surface with 360 grit waterproof paper and water until a smooth clean surface was produced; some were used in the as received condition; all were degreased before using.

### 4.2 Hot Press Bonding

The specimens were made from 2 in. OD x 2-1/8 in. long x 1/8 in. wall type 304 stainless steel tubes. Tapers, with a surface finish of 16 to 32 microinch (rms) were machined on one end. Three different types of tapered specimens are shown in Figure 7, two with a sharp and one with a flat leading edge.

All specimens were degreased thoroughly before using.

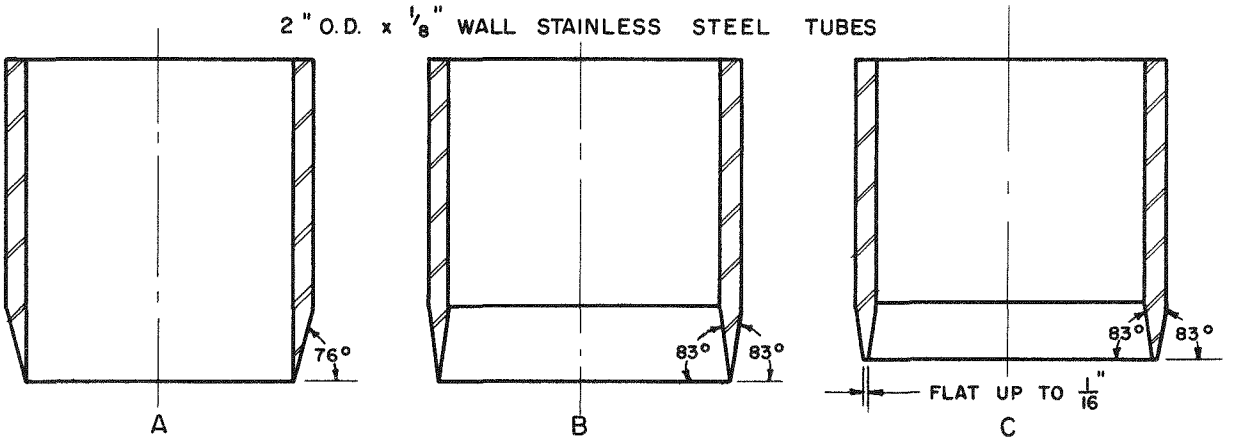


FIG. 7
TYPES OF TAPERED SPECIMENS

## 5. RESULTS AND DISCUSSION

### 5.1 Hot Press Bonding

#### 5.1.1 Deformation of Tapers During Pressing

The bonding particulars are given in Table 1.

All stainless steel specimens with a sharp leading edge were deformed during hot pressing as shown in Figure 8.

| Specimen Number | Type of Taper on SS Tube | Size of Flat at Leading Edge of Taper | Specimen Preheat Temp. °C | Time Min. | Arrangement for Hot Pressing | Effect of Pressing on Taper |
|---|---|---|---|---|---|---|
| 108 | See Fig. 7A | 0 | 510°C | 30 | As per Fig. 5 without hole | Taper curled inward |
| 109 | See Fig. 7A | 0 | 510°C | 30 | As per Fig. 5 without hole | Taper curled inward |
| 110 | See Fig. 7A | 0 | 510°C | 30 | As per Fig. 5 without hole | Taper curled inward |
| 111 | See Fig. 7A | 0 | 510°C | 30 | As per Fig. 5 without hole | Taper curled inward |
| 112 | See Fig. 7A | 0 | 510°C | 30 | As per Fig. 5 without hole | Taper curled inward |
| 113 | See Fig. 7B | 0 | 510°C | 30 | As per Fig. 5 without hole | Taper curled outward |
| 114 | See Fig. 7B | 0 | 510°C | 30 | As per Fig. 5 without hole | Taper curled outward |
| 115 | See Fig. 7B | 0 | 510°C | 30 | As per Fig. 5 with hole | Taper curled outward slightly |
| 116 | See Fig. 7B | 0 | 510°C | 30 | As per Fig. 5 with hole | Taper curled outward slightly |
| 117 | See Fig. 7B | 0 | 510°C | 30 | As per Fig. 5 with hole | Taper curled outward slightly |
| 118 | See Fig. 7B | 0 | 510°C | 30 | As per Fig. 5 with hole | Taper curled outward slightly |
| 119 | See Fig. 7C | 1/16 in. flat | 510°C | 30 | As per Fig. 5 with hole | Taper straight |
| 120 | See Fig. 7C | 1/32 in. flat | 510°C | 30 | As per Fig. 5 with hole | Taper straight |
| 121 | See Fig. 7A | 1/16 in. flat | 510°C | 30 | As per Fig. 5 without hole | Taper straight |
| 122 | See Fig. 7A | 1/32 in. flat | 510°C | 30 | As per Fig. 5 without hole | Taper curled inward only slightly |
| 123 | See Fig. 7C | 1/32 in. flat | 510°C | 30 | As per Fig. 6 | Taper straight |
| 124 | See Fig. 7C | 1/32 in. flat | 510°C | 30 | As per Fig. 5 without hole | Taper straight |
| 125 | See Fig. 7C | 1/32 in. flat | 510°C | 30 | As per Fig. 5 with hole | Taper straight |
| 149 | See Fig. 7C | .020 in. flat | 510°C | 30 | As per Fig. 6 | Taper straight |
| 150 | See Fig. 7C | .020 in. flat | 510°C | 30 | As per Fig. 6 | Taper straight |
| 151 | See Fig. 7C | .020 in. flat | 510°C | 30 | As per Fig. 6 | Taper straight |

1S Aluminum used throughout.
Specimens all type 304 stainless steel.

TABLE 1 HOT PRESS BONDING PARTICULARS

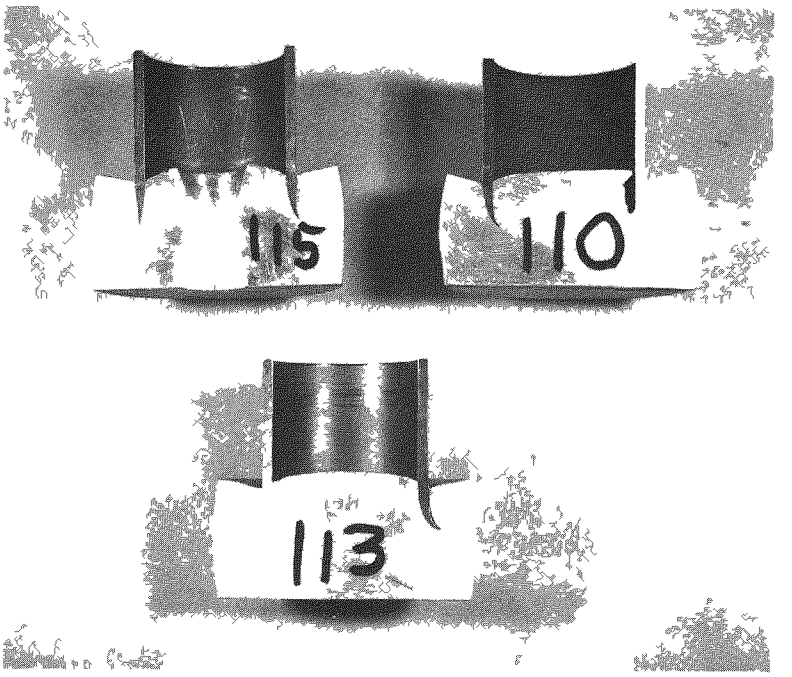


Figure 8 Cross-section of Hot Press Bonded Specimens Showing Distorted Tapers (Tapers have sharp leading edge.)

This deformation was in part caused by the lack of restraint on the outside surface of the aluminum. A 3/4 in. diameter hole in the aluminum disc helped to prevent wandering of the leading edge but did not completely eliminate it. A flat up to 1/16 in. wide on the leading edge of the taper was the best method of eliminating distortion during the hot pressing operation. Sections of specimens with flats on the leading edge are shown in Figure 9. None of the double-taper specimens #119, 120 and 124 with flats were distorted. Only a minimum amount of wandering occurred on the single-taper specimen #122 with a 1/32 in. flat. Some double-taper specimens were pressed while the aluminum was restrained in a die. No distortion occurred. One of these is shown at right in Figure 9.

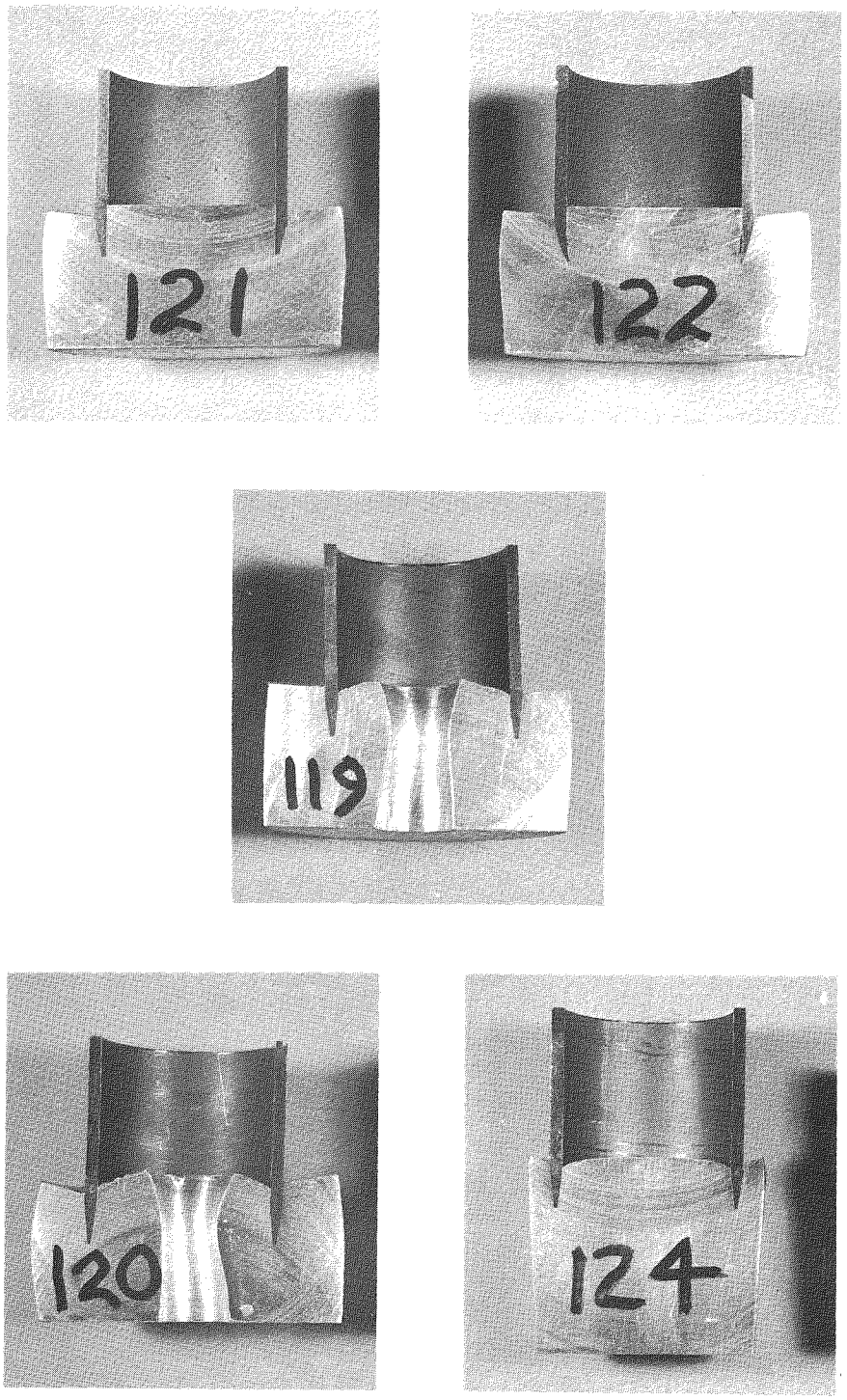


Figure 9 Cross-sections of Hot Press Bonded Specimens (Tapers have blunt leading edge.)

### 5.1.2 Extent of the Bond

After the bending of the tapered end of the stainless steel specimens had been eliminated, a number of the aluminum to stainless steel bonded specimens were machined as shown in Figure 10 and then pulled in tension as shown in Figure 11. Specimens # 123, 149, 150 and 151 (see Table 1)

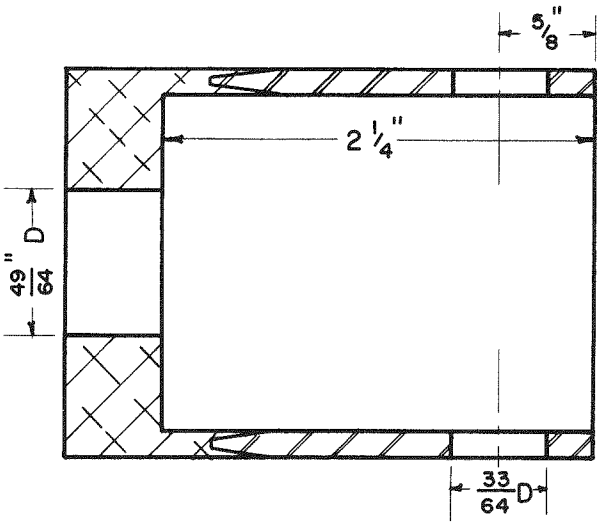


FIG. 10

HOT PRESS BONDED SPECIMEN AFTER MACHINING TO SIZE FOR TENSILE TEST

were hot pressed in a restraining die as shown in Figure 6 and failed in tension in the aluminum at loads from 7400 to 8000 lb. Specimen #123 after tensile testing is shown in Figure 12. Specimens #124 and 125 were pressed without restraint as shown in Figure 5 and failed partly in bond along the outer surface of the taper and partly in tension in the aluminum at loads of 5500 and 6000 lb.

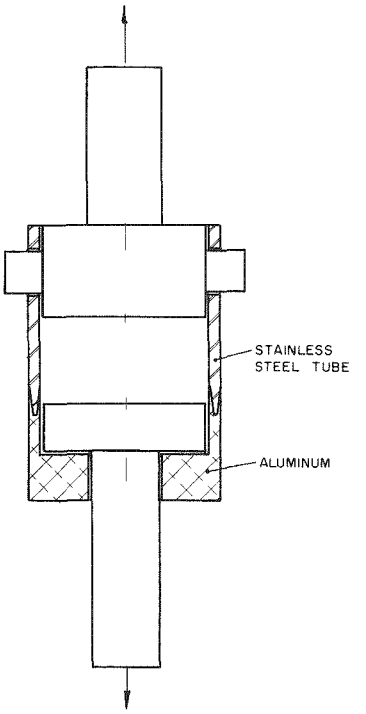


FIG 11
ARRANGEMENT FOR TENSILE TESTING OF HOT PRESS BONDED SPECIMEN

The difference in strength between the restrained and unrestrained specimens could have been due to the higher pressure developed in the aluminum or, just as likely, to a difference in the aluminum flow pattern during pressing.

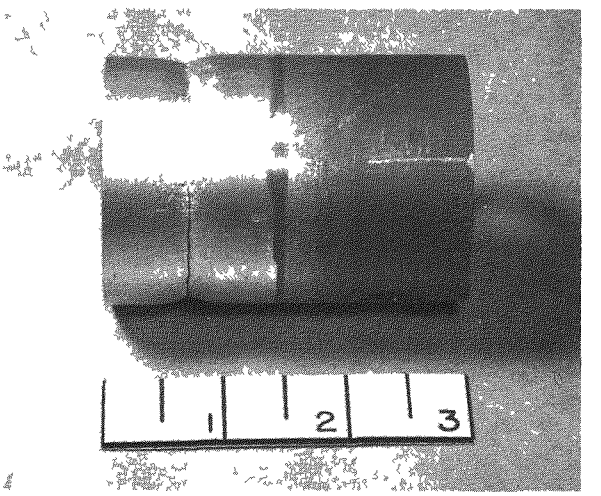


Figure 12 Hot Press Bonded Specimen After Tensile Test

## 5.2 Extrusion Bonding

Before the start of the extrusion bonding operation the surface of the aluminum exposed at the exit of the die orifice becomes oxidized. If this aluminum is not removed a poor bond will be produced over a short length when the tube is clad. This can be prevented by starting the cladding on a short piece of steel shim stock. After the aluminum has passed from the shim stock to the stainless steel tube, the shim stock and the oxidized aluminum are removed.

In order to produce a good bond between aluminum and the oxidized surface of stainless steel it is imperative that the bond between the oxide layer and the stainless steel be exceptionally strong. Anything that interferes with the formation of a tightly adherent continuous oxide layer must be avoided.

A number of stainless steel specimens were clad in the as received condition without any preparation of the surface except degreasing. The pertinent data are shown in Table 2. Four of these specimens were preheated at 454°C and one at 510°C. Most of the bonds after cladding were quite satisfactory but a fairly high percentage of the bonds failed at the aluminum stainless steel interface.

Specimens #89S, 91S, 98S and 100S were wet polished before preheating at 510°C. On the average the bonds were slightly better than the unfinished specimens, and a smaller percentage of bond failures were recorded but the difference was not strikingly apparent. Specimens #95S, 96S and 97S were wet polished and then wrapped in tissue paper. These specimens were unintentionally soaked with water and were allowed to dry while still wrapped. Two of these specimens 95S and 96S were preheated at 510°C and a blotchy oxide layer formed on the surface. The bond strength of these specimens after cladding was noticeably less than the others. In most cases when the bond failed the aluminum cladding lifted from the stainless steel adjacent to the hole left when the stud was pulled. Specimen #97S was rubbed with Snap and degreased before preheating at 510°C. The oxide layer produced was uniform and shiny. After cladding, the aluminum-stainless steel bond was found to be exceptionally good.

Three wet polished stainless steel specimens #104S, 105S and 106S were clad with aluminum under the conditions shown in Table 2. The clad tubes were machined to size as shown in Figure 13 left, and then welded to aluminum end fittings as shown in Figure 13 right. The specimens were pressurized with water

| Specimen Number | Preparation of Surface of Tube | Mandrel & Specimen Preheat Temp. °C | Mandrel & Specimen Preheat Time Min. | Bond Strength by Pulling Studs lb/in.$^2$ Average | Minimum | Maximum | % of Studs that Broke the Al-Stainless Bond |
|---|---|---|---|---|---|---|---|
| 83S | None | 454 | 20 | 18,000 | 13,500 | 26,000 | 100 |
| 84S | None | 454 | 60 | 23,000 | 17,000 | 27,000 | 83 |
| 87S | None | 454 | 30 | 20,000 | 17,500 | >24,000 | 50 |
| 88S | None | 454 | 35 | 17,500 | 14,000 | >22,000 | 50 |
| 89S | Wet Polished | 510 | 30 | 28,000 | 22,500 | >32,500 | 16 |
| 90S | None | 510 | 25 | 22,000 | 15,500 | 27,000 | 100 |
| 91S | Wet Polished | 510 | 30 | 21,500 | 13,000 | >25,000 | 20 |
| 95S | Wet Polished, allowed to sit in wet tissue paper | 510 | 35 | 17,500 | 8,000 | 23,000 | 60 |
| 96S | Wet Polished, allowed to sit in wet tissue paper | 510 | 15 | 16,000 | 10,000 | 21,000 | 100 |
| 97S | Same as above except rubbed with Snap and degreased | 510 | 15 | >25,000 | >23,000 | 27,000 | 40 |
| 98S | Wet Polished | 510 | 30 | >25,000 | >25,000 | >25,500 | 0 |
| 100S | Wet Polished | 510 | 30 | 24,000 | 17,000 | >25,000 | 40 |

| | | | | Pressure Test Maximum Pressure lb/in.$^2$ Gauge | Remarks |
|---|---|---|---|---|---|
| 104S | Wet Polished | 510 | 30 | 2,500 | Aluminum bulged - no leak |
| 105S | Wet Polished | 510 | 30 | 2,400 | Aluminum bulged - no leak |
| 106S | Wet Polished | 510 | 30 | 1,700 | Aluminum slightly bulged - no leak |

Tube Material - 304 stainless steel
Cladding Material - 1S aluminum
Die Temperature 496°C

A 3/16 in. diameter aluminum stud is welded to the aluminum surface and the stud is pulled in tension until the stud or aluminum-stainless steel bond breaks.

TABLE 2 EXTRUSION BONDING PARTICULARS

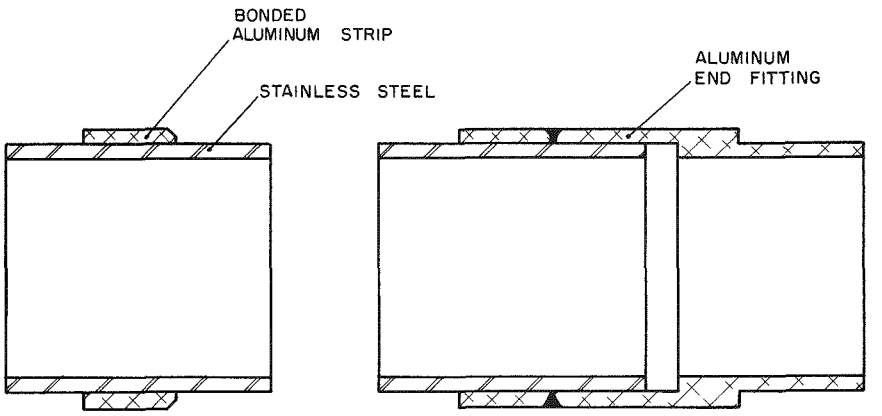


FIG. 13

EXTRUSION BONDED SPECIMEN WITH AND WITHOUT END FITTING

at the pressures shown in Table 2. Specimens #105S and 106S after pressure testing are shown in Figures 14 and 15 respectively. No leaks developed at the aluminum-stainless steel bond during the pressure test.

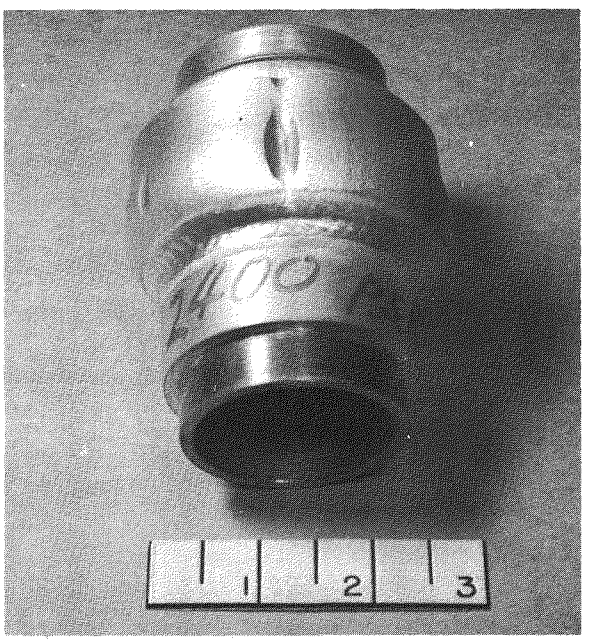


Figure 14 Extrusion Bonded Specimen After Pressure Testing at 2400 lb/in$^2$ Gauge

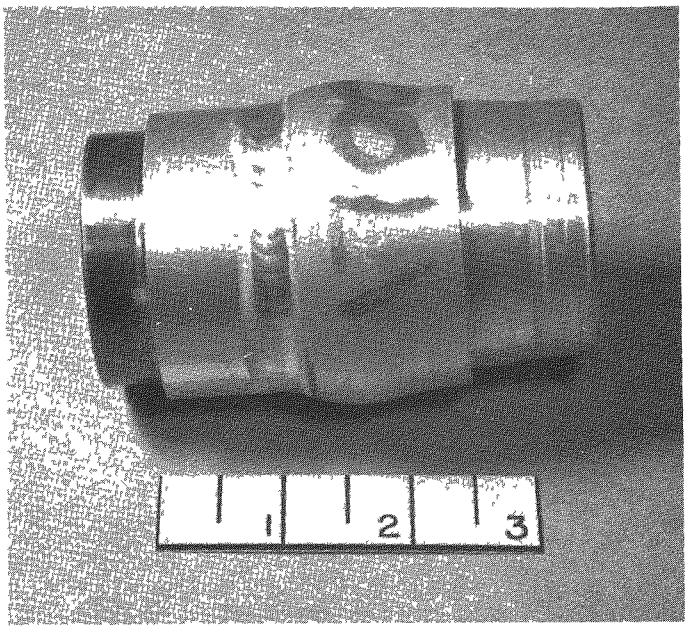


Figure 15 Extrusion Bonded Specimen After Pressure Testing at 1700 lb/in$^2$ Gauge

A photograph of a representative section of the aluminum-stainless steel interface of specimen #100S is shown in Figure 16. No diffusion was found. The black layer between the aluminum and the stainless steel is probably the thin oxide layer that was formed initially on the stainless steel.

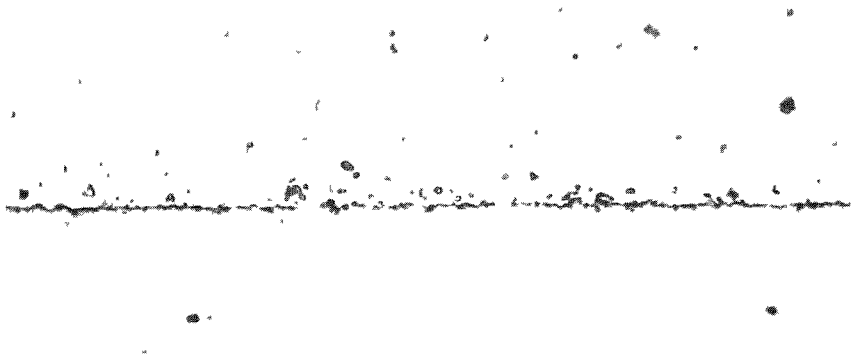

1000 X

Figure 16 Aluminum-Stainless Steel Interface of Specimen 100S (white portion of photograph is aluminum, grey is stainless steel)

## 6. CONCLUSIONS

1. Type 1S aluminum can be bonded to oxidized 304 stainless steel by hot pressing and extrusion bonding.

2. Strong bonds can be produced by both techniques.

3. If consistently good bonds are to be produced, surface impurities and contaminants must be removed from the stainless steel before the oxide layer is formed.

## 7. BIBLIOGRAPHY

1. R. D. Watson, Diffusionless Bonding of Aluminum to Zircaloy-2, AECL Report CRE-1139, December 1962.

2. R. D. Watson, An Investigation of the Variables in the Extrusion Cladding of Uranium with Aluminum, AECL Report EDI-71-2, 29 April 1960.