I

Prepared for:

Division of Reactor Development
U. S. Atomic Energy Commission

Appendix-3

AN EVALUATION OF HEAVY WATER REACTORS FOR POWER

By:

D. P. HERRON
W. H. NEWKIRK
A. PUISHES

AMERICAN-STANDARD • ATOMIC ENERGY DIVISION
REDWOOD CITY, CALIFORNIA

ISSUED: 1 OCTOBER 1957
CONTRACT: AT-(04-3)-109

DISCLAIMER

This report was prepared as an account of work sponsored by an agency of the United States Government. Neither the United States Government nor any agency Thereof, nor any of their employees, makes any warranty, express or implied, or assumes any legal liability or responsibility for the accuracy, completeness, or usefulness of any information, apparatus, product, or process disclosed, or represents that its use would not infringe privately owned rights. Reference herein to any specific commercial product, process, or service by trade name, trademark, manufacturer, or otherwise does not necessarily constitute or imply its endorsement, recommendation, or favoring by the United States Government or any agency thereof. The views and opinions of authors expressed herein do not necessarily state or reflect those of the United States Government or any agency thereof.

DISCLAIMER

Portions of this document may be illegible in electronic image products. Images are produced from the best available original document.

II

TABLE OF CONTENTS

	Summary	1
I	Introduction	3
II	General Discussion of Heavy Water Reactors	5
	Natural Versus Enriched Uranium in Heavy Water Reactors	6
	Selection of Reactor Designs	8
III	Results and Discussion	13
	Core Design	13
	Reference Reactor Designs	19
	Design of Equipment for Heavy Water Reactors	23
	Comparison of Heavy Water Reactor Economics with Other Types	25
	Effect of Modifying the Ground Rules	26
IV	Appendices	
	A Heat Transfer	
	B. Mechanical Features and Detailed Cost Estimates	
	C Costs of Fuel Cycle Steps	
	D. Methods of Reactor Physics Calculations	
	E Review of Heavy Water Designs	
	F Study of Pressure and Containment Vessels by Consolidated Western Steel	

III

TABLES

Table I	Summary of Results for Boiling Cores
Table II	Summary of Results for Pressurized (Non-Boiling) Cores
Table III	Selection of Optimum 100 EMW Boiling Reactor Design, One-Batch Loading
Table IV	Summary of Reference Designs (One-Batch Loading)
Table V	Heavy Water Inventory
Table VI	Heavy Water Losses
Table VII	U. S. Power Costs from Various Reactor Types (100 to 250 EMW Size)
Table VIII	Effect of Modifying the Economic Ground Rules
Table A-I	Boiling Reactor Heat Flux Values
Table B-I	Effect of Turbine Throttle Pressure on Construction Costs
Table B-II	Boiling Heavy Water Reactor Power Plants, Detailed Construction Costs
Table B-III	Pressurized Heavy Water Reactor Power Plants, Detailed Construction Costs
Table B-IV	Approximation of a 500 EMW Boiling D_2O Plant
Table C-I	Enriched Uranium Prices
Table C-II	Fuel Element Cost Estimates
Table C-III	Summary of Fuel Conversion and Fabrication Costs
Table D-I	Fuel Element A, Reactor Parameter Survey
Table D-II	Fuel Element B, Reactor Parameter Survey
Table D-III	Geometrical Bucklings for Various Core Sizes: Right Cylinders

II

FIGURES

Figure 1	Effect of Capital Charges on Power Cost
Figure 2	Effect of Fuel Cycle Costs on Power Cost
Figure 3	Fuel Element
Figure 4, 5	ηf vs. MWD/Metric Ton
Figure 6, 7	Buckling vs. MWD/Metric Ton
Figure 8, 9	U-235 Burn-out
Figure 10, 11	Pu Formation
Figure 12, 13	Burn-up Costs and Pu Credit
Figure 14	Xenon Transient
Figure 15	Effect of Enrichment Fuel Cycle Cost
Figure 16, 17	Flow Sheets for Six Designs
Figure B-1	Turbine Sealing System
Figure B-2, 3 4, 5,	Effect of Feedwater Heaters on Fuel and Capital Cost (Boiling and Pressurized)
Figure B-2, 7	Pressure Vessel Costs
Figure B-8	Effect of Pressure Vessel Cost on Unit Power Costs
Figure C-1	Effect of Zirconium Content on Fuel Element Cost

SUMMARY

Purpose - This study was conducted for the U. S. Atomic Energy Commission in the Project Size-Up series. Its purpose was to evaluate heavy water power-producing reactors. Particular attention was paid to the merits of using natural uranium compared with enriched uranium in this reactor type and to the problems of pressure-vessel and equipment design.

Scope - Reference designs for pressurized and direct-boiling heavy water reactors were prepared for electrical outputs of 20, 100, and 250 electrical megawatts. A number of possible core designs were considered and those utilized which seemed most appropriate to give low-cost power. The technology and costs available today were employed in the preparation of the over-all plant designs. The Consolidated Western Steel Division of U. S. Steel Corporation assisted in this study by preparing a comprehensive report on the design of large pressure vessels and containment vessels. Zirconium-clad metal uranium fuel elements were used as the basis for this study, but the effect of using uranium oxide and stainless steel cladding was also considered.

Principal Results

The principal results found were:

1) Over a wide range of operating conditions and economic situations, enriched uranium (up to perhaps 1.4% U-235) is presently more economic to employ in heavy water reactors than is natural uranium. The chief reason for this is that enriched uranium permits a sufficiently favorable combination of longer exposure time, smaller lattice spacing, and lower critical mass so that the savings in fuel-cycle cost and capital charges more than compensate for the higher cost of the enriched uranium.

2) In the longer range, the use of natural uranium may become more economic as zirconium fabrication costs decrease, continuous charge-discharge devices are developed to permit longer exposure levels, and pressure-vessel technology advances so that the large critical masses and core diameters required are not such an economic penalty on the natural uranium. The results of this study agree quite well with the data and discussions of the Canadians on this matter.

3) Both the relatively high capital cost and the additional charges for heavy water inventory and losses make the economics of the heavy water reactor more sensitive to size than for other types. A comprehensive analysis of the equipment requirements indicated that neither the pressure vessel nor the leakage restrictions present insurmountable problems. The following costs were estimated on the basis of a moderate amount of optimism that present nuclear fabricating costs will be improved somewhat:

	20 EMW		100 EMW		250 EMW	
	Boiling	Pressurized	Boiling	Pressurized	Boiling	Pressurized
$/kw	540	695	306	374	247	302
Mills/kwh:						
Capital charge (15%)	11.6	14.9	6.6	8.0	5.3	6.4
Fuel cycle cost	2.5	2.4	2.3	2.3	2.6	2.3
D_2O losses	2.1	1.7	0.8	0.7	0.6	0.4
D_2O inventory (12%)	3.0	3.0	1.4	1.2	0.9	0.8
Operating and maintenance	1.8	1.8	1.2	1.2	1.0	1.0
Total	21.0	23.8	12.3	13.4	10.4	10.9

In the size of 100 EMW and above, these costs are in the same range as slightly enriched light water reactors. The small heavy water reactor (20 EMW) has relatively high power costs, however, compared with possible light water designs.

I. INTRODUCTION

Scope

Under Project "Size-Up" American-Standard has been performing a series of reactor evaluations for the Division of Reactor Development of the U. S. Atomic Energy Commission. This study is an analysis of pressurized and boiling heavy water reactors with particular emphasis on the following areas requested by the AEC:

1) Power Level - Effect of plant size on cost of power in the range of 50 - 200 EMW. (The largest size was later raised to 250 EMW, and an extrapolation to 500 EMW was made.)

2) Pressure Vessel - The effect of power variation on pressure vessel specifications, cost, and fabrication problems.

3) D_2O Losses and Contamination - As reliable an estimate as possible of the D_2O loss in a high-pressure, high-temperature system, in particular the possible losses from the turbine in a boiling design. An estimate of possible rates of contamination of the D_2O by in-leakage, e g., of condensed cooling water.

4) Natural Uranium vs. Enriched Uranium Operation - A discussion of the effect on pressure vessel specifications and on reactivity lifetime of the core, including the effect of xenon transients on allowable specific power.

5) Cost Reduction Potential - An estimate of the potential for cost reductions arising from technological advances for both the boiling and pressurized design.

Approach

This study was performed in two phases:

Phase 1 - A generalized reactor physics study was carried out to determine the effect of core design and enrichment on the reactivity limits which the fuel in heavy water reactors can attain before loss of criticality. The choice of fuel element designs and other parameters was dictated primarily by the objective of determining under what conditions natural uranium could compete economically with slightly enriched uranium.

Phase 2 - The design of a boiling and a pressurized reference reactor was carried out for each of the three electrical outputs:

20 EMW
100 EMW
250 EMW

In addition, a preliminary estimate was made of a 500 EMW reactor.

In selecting design criteria for the reference reactors, the optimum design parameters developed in Phase I were utilized. Upon these criteria were imposed heat transfer limitations. In addition, heavy water inventory and losses were established; operating pressures and flow rates through the core were optimized; unit power-generating costs were calculated. The reactors were then evaluated in comparison with light water slightly enriched reactors and other types to determine the conditions under which heavy water reactors would be most attractive.

Limitations to Study

Important objectives of this study were (a) to analyze the relative attractiveness of natural versus enriched uranium in heavy water reactors and (b) to compare heavy water pressurized and boiling reactors in terms of equipment costs, heavy water inventory and losses, and fuel-cycle costs. Hence the following limitations were adopted to eliminate extraneous variables which would not appreciably affect the comparisons:

1) Metallic uranium fuel elements were employed in all of the designs considered, since they permit higher reactivity levels than uranium oxide elements and hence present the best cost case for natural uranium. Cost data were gathered and qualitative observations made on the effect of substituting uranium oxide for uranium metal.

2) Direct cycle reactors only were considered in the boiling reactor category. This decision was based on an estimate of the lower capital equipment cost for the direct cycle versus the lower D_2O inventory requirement of the indirect type.

3) Pressurized-shell reactors were considered rather than pressurized-tube reactors, since the pressure vessel study indicated that quite large, high-pressure vessels could be fabricated. The pressurized-shell approach eliminates the problem of pressure-sealing the tube coolant from the shell

fluid and hence is more straightforward. In the very large sizes, however, there is some possibility that a practical pressurized-tube design might be developed which would give lower power costs than the pressurized-shell type. Such a pressurized-tube reactor is now under development in Canada.

4) Zirconium cladding only was considered, since the use of such materials as stainless steel would preclude the use of natural uranium metal fuel. Until there are further reductions in the cost of fabricated zirconium, it is possible that enriched fuel clad in stainless steel would give lower power costs in heavy water reactors than would zirconium-clad fuel.

Sub-contractual Assistance

The Consolidated Western Steel Division of the U. S. Steel Corporation was requested to carry out design and cost studies on the large reactor and containment vessels required for heavy water reactors. The results of their study were used in the large reactor designs The complete text of the study is included in Appendix F of this report.

II. GENERAL DISCUSSION OF HEAVY WATER POWER REACTORS

The characteristics of heavy water reactors may be summarized as follows:

Advantages	Disadvantages
1) Excellent neutron economy giving low burn-up costs.	1) D_2O has poorer slowing-down properties than H_2O. Hence large lattice spacings and large cores are required to achieve practical values of resonance escape probability and reactivity
2) Ability to use natural uranium.	2) Stringent design measures are required to minimize leakage and to recover heavy water which does escape The expected leakage cost for heavy water is a significant item
3) Long neutron lifetime, giving some safety advantages.	

Because of these characteristics, heavy water power reactors are large and have relatively high capital costs and low fuel-cycle costs. In this respect they are similar to the British gas-cooled Calder Hall type of reactor, and, like the Calder Hall reactor, they will be economically attractive in a situation in which capital funds are available at low annual charges.

The various factors which make up the capital charge that must be assessed on the construction cost of a nuclear power plant were discussed in a previous Size-up report[1]. In the United States, private utilities must levy a capital charge of about 15% per year on the construction cost of a nuclear plant, while in Europe this charge may be as low as 8% because of the lower interest rates and taxes which prevail there. Hence heavy water reactors will compete more favorably with other reactor types in Europe than in the United States.

Figure 1 shows the effect of the capital charge rate on the unit power cost in mills per kilowatt hour at two plant factors and at various capital plant costs expressed in dollars per kilowatt. Figure 2 shows the contribution of the fuel-cycle cost to the unit power cost as a function of the obtainable exposure level of the fuel, with plant efficiency and fuel-cycle cost per kilogram of fuel as parameters. Both of these figures may be derived directly from the equations given previously[1].

It may be observed from Figure 1 that at a plant factor of 80% and a capital cost of $350 per kilowatt, reduction of the capital charge rate from 15% to 8% would result in a difference of 3.5 mills per kilowatt hour in the calculated power cost. The importance of achieving exposure levels above 5,000 MWD/ton so as to reduce the fuel-cycle cost can be seen from Figure 2.

Another important factor is the inventory charge on the heavy water. Although this material may be purchased at $28 per pound, the less expensive procedure would be to rent it from the U. S. AEC at 4% per dollar-year.

Natural vs. Enriched Uranium in Heavy Water Reactors

Recent data on the integrity of zirconium-clad fuel elements indicates that exposures of 5,000 MWD/ton and above with uranium metal and exposures of 10,000 MWD/ton and above with uranium oxide may be achieved before the element fails metallurgically. By using slightly enriched fuel in heavy water reactors, it is feasible, of course, to obtain sufficient reactivity to achieve these exposure levels, and hence fairly low fuel-cycle costs are quite possible. However, a majority of the heavy water designs available postulate the use of natural uranium as fuel, since it has been felt that a primary reason for

---

[1] American-Standard, "Comparison of Calder Hall and PWR Reactor Types," Report AECU-3398, p. 49, March, 1957.

Figure 1

7

Fixed Charges for Power Generation

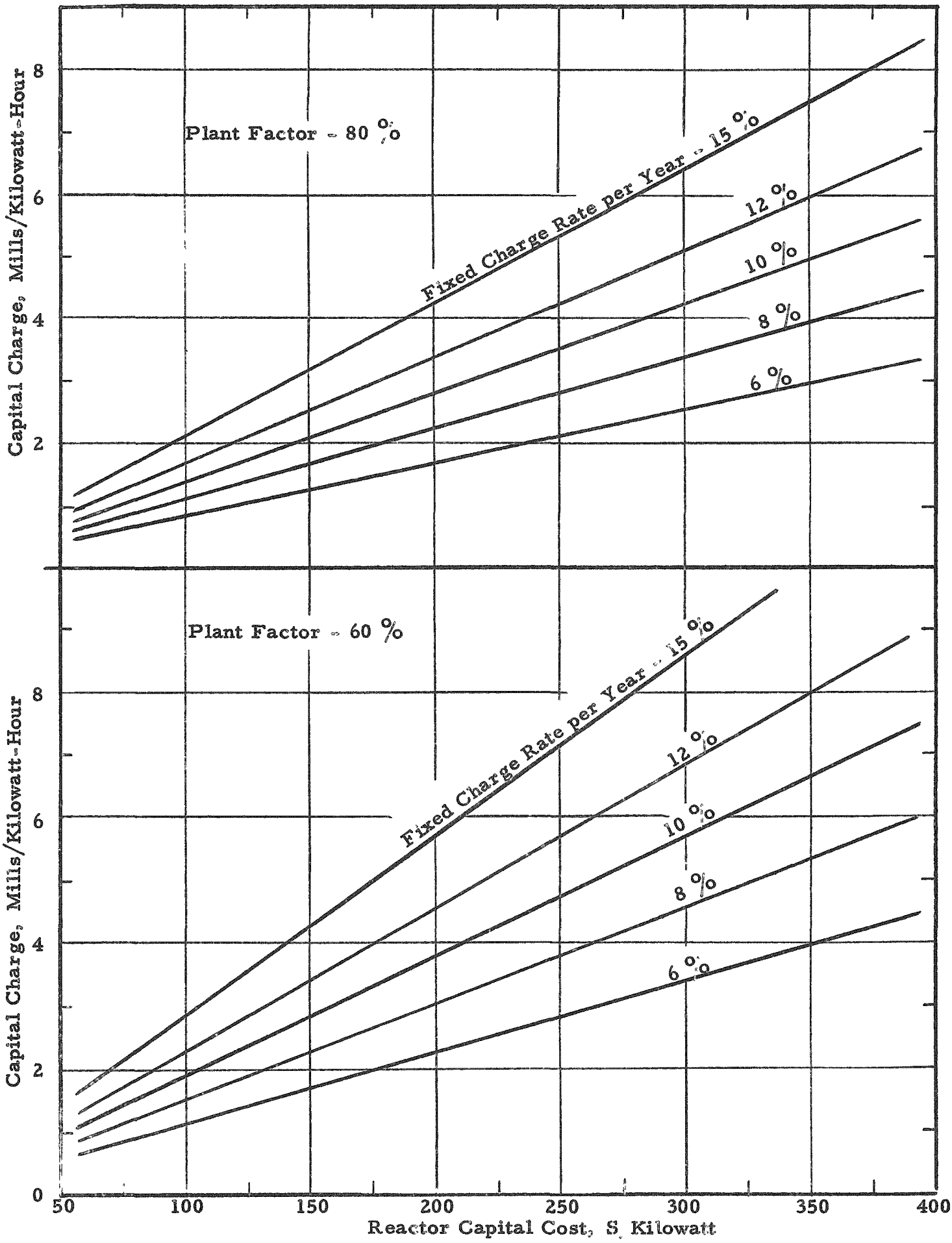

Figure 2

Fuel Cycle and Burnup Costs

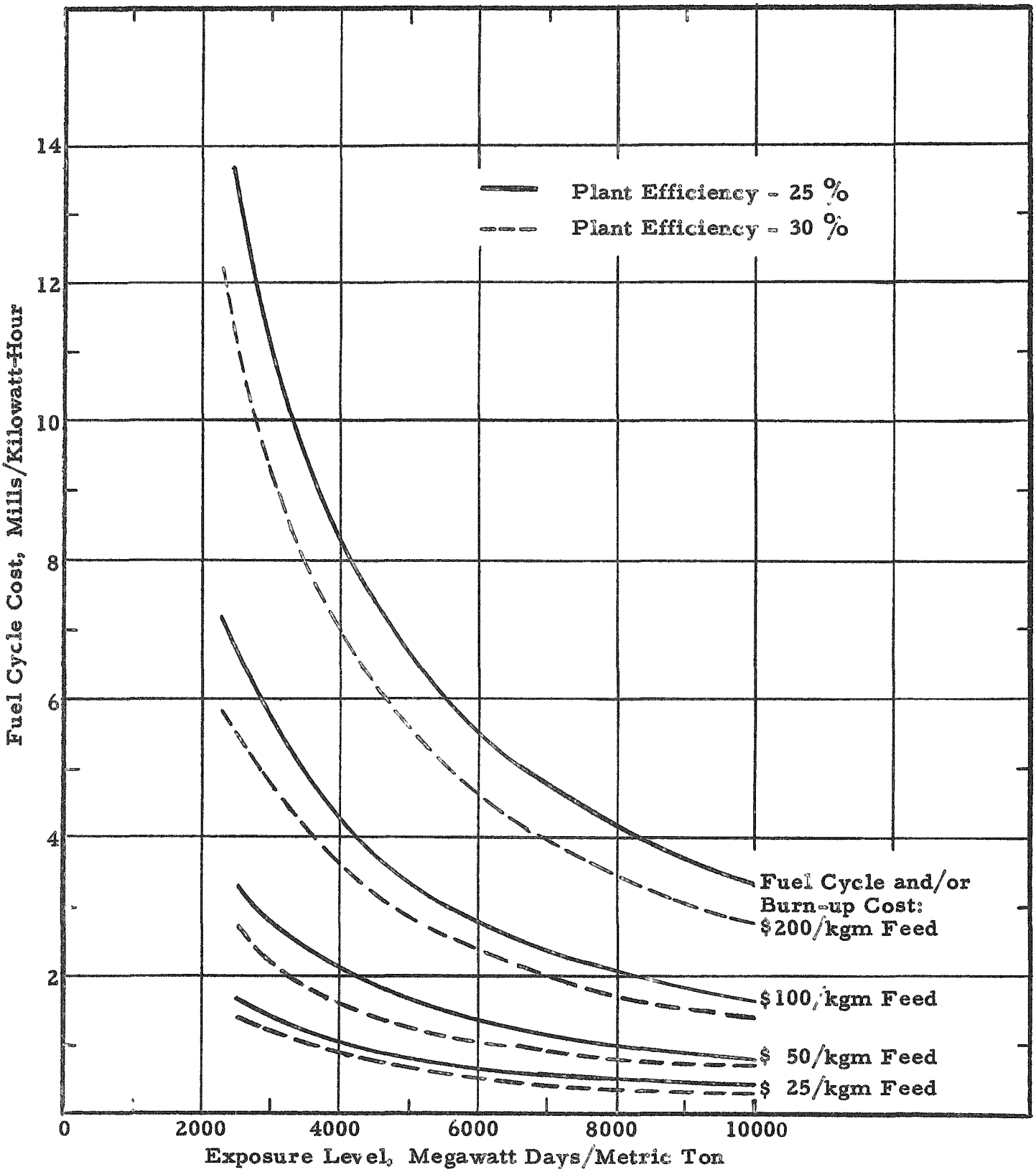

employing heavy water would be to permit countries feeling unsure of a continuing supply of enriched uranium to base their nuclear power economy on natural uranium. The achievement of long reactivity lifetime with natural uranium is somewhat more difficult than with enriched uranium and necessitates the employment of special means, such as the continuous charge-discharge schedule envisaged in the Canadian heavy water pressurized reactor.[2]

The advantages of enriched uranium compared with natural uranium are as follows:

Advantage	Cost Saving	Probable Limitations
1) Lower critical mass.	1) Smaller reactors. 2) Lower inventory of heavy water.	1) Heat transfer.
2) Greater reactivity.	1) Lower fuel-cycle cost. 2) Less frequent shut-down. 3) Use of oxide fuel to avoid fuel element failure. 4) More flexibility in operation.	1) Radiation damage.

The disadvantages of enriched uranium are:

1) Expense - The cost per unit of fuel is higher than for natural uranium.

2) Availability - Enriched uranium requires an isotope separation plant for its production. Natural uranium will probably always be more readily available than enriched uranium, although this may not be serious because of the willingness of the U. S. and other countries to make large quantities of enriched uranium available to nations not having isotope separation facilities

In view of the above considerations, the situation under which natural uranium can compete is a favorable combination of the following conditions:

1) Large core required - At high power outputs, where heat transfer is the factor limiting core design, there is no advantage to enriched uranium so far as tending to reduce the core size is concerned.

2) Radiation damage limiting When the exposure level becomes limited by radiation damage rather than reactivity, enrichment offers no economy through extending the exposure level.

---

[2] W B. Lewis, "Low Cost Fuelling Without Recycling, " AECL 382, December 1956.

3) Long exposure level possible with natural uranium - By various rearrangements of fuel, continuous charge-discharge, or other devices, it may be possible to extend the exposure level with natural uranium. If a sufficiently high exposure level can thus be reached, the lower burn-up cost of natural uranium will eventually more than outweigh the even longer exposure levels possible with enrichment. As described in Appendix E, the Canadian concept of heavy water reactors envisages exposure levels of up to 10,000 MWD/metric ton, achievable with natural uranium oxide by a semi-continuous charge-discharge. Benedict and Pigford[3] have also pointed out the considerable extension of reactivity possible by improvements on the one-batch method of core loading.

Selection of Reactor Designs

Since the basic objective of this study was a rather broad comparison of different heavy water reactor designs, it was felt that both boiling and pressurized reactors should be included in several different electrical outputs and that other important variables such as core design and operating pressure should be carefully considered. Electrical outputs considered are 20, 100, and 250 EMW, and rough estimates were prepared for 500 EMW. The 20 EMW design studied is of interest, primarily because it is probably below the minimal plant size at which any heavy water reactor can be expected to compete favorably with light water reactors. The 100 and 250 EMW reactors are most representative of the sizes of current interest. The 500 EMW reactor was investigated to determine whether pressure-vessel limitations might impose an upper limit on the power output from heavy water reactors.

A number of heavy water reactor designs have been published. Certain of these are discussed in Appendix E. The general problem of designing a heavy water reactor for minimum-cost power consists of selecting the best balance among the following factors which affect the economics:

The amount of fuel element surface per unit weight of fuel - In general, for a low critical mass and long reactivity lifetime, the fuel should be consolidated to the maximum extent allowable by heat transfer considerations.

---

[3] M. Benedict and T. H. Pigford, "Fuel Cycles in Single-Region Thermal Reactors," Paper 57-NESC-41, 2nd Nuclear Conference, Philadelphia, March, 1957.

The lattice spacing - A large lattice spacing in heavy water reactors improves reactivity but involves higher costs for heavy water and the pressure vessel.

Heat transfer design - The recirculation rate of the liquid phase through the core in the boiling type improves heat transfer but increases pumping cost. In the pressurized type, there is an optimum design involving flow rate of the primary coolant, heat transfer surface, steam generating pressure, etc.

Steam conditions - The steam pressure affects the efficiency of the power plant, the plant construction costs, and the fuel-cycle cost. It has been pointed out[3] that in nuclear power plants the marginal cost of heat will quite probably be lower than in conventionally-fueled plants. This is particularly true in heavy water reactors and will favor a fairly low-pressure plant.

Other variables in the plant design such as turbine throttle pressure, condenser back pressure, the amount of feed water heating, etc., were considered in the study. However, major emphasis was centered on the variables listed above, as is pointed out in the following paragraphs.

Fuel Elements (See Figure 3)

Calculations were performed on cores employing uranium metal plate elements. The first element considered (Element "A") is similar to that in the heavy water reactor design presented by Argonne National Laboratory at the Geneva Conference[4], except that a somewhat greater plate thickness was used to reduce fuel fabrication costs and improve reactivity. The fuel plate is an alloy of 1.5% Nb, 5.0% Zr, and 93.5% U by weight. The plate thickness is 0.17 in., the cladding is 20 mills of Zr. Six plates are assembled in a 5-in. ID, 1/16-in. thick Zr shroud. The total fuel plate width is 21 in., and the water channel is 0.35 in. thick. The width of the widest plate is 4 5 in.

The second element (Element "B") is essentially identical to that described in the above-mentioned Argonne design. A thinner plate is employed

---

4 H. P. Iskenderian, et al., Geneva Conference Paper, P/495, Vol. 3 (1955).

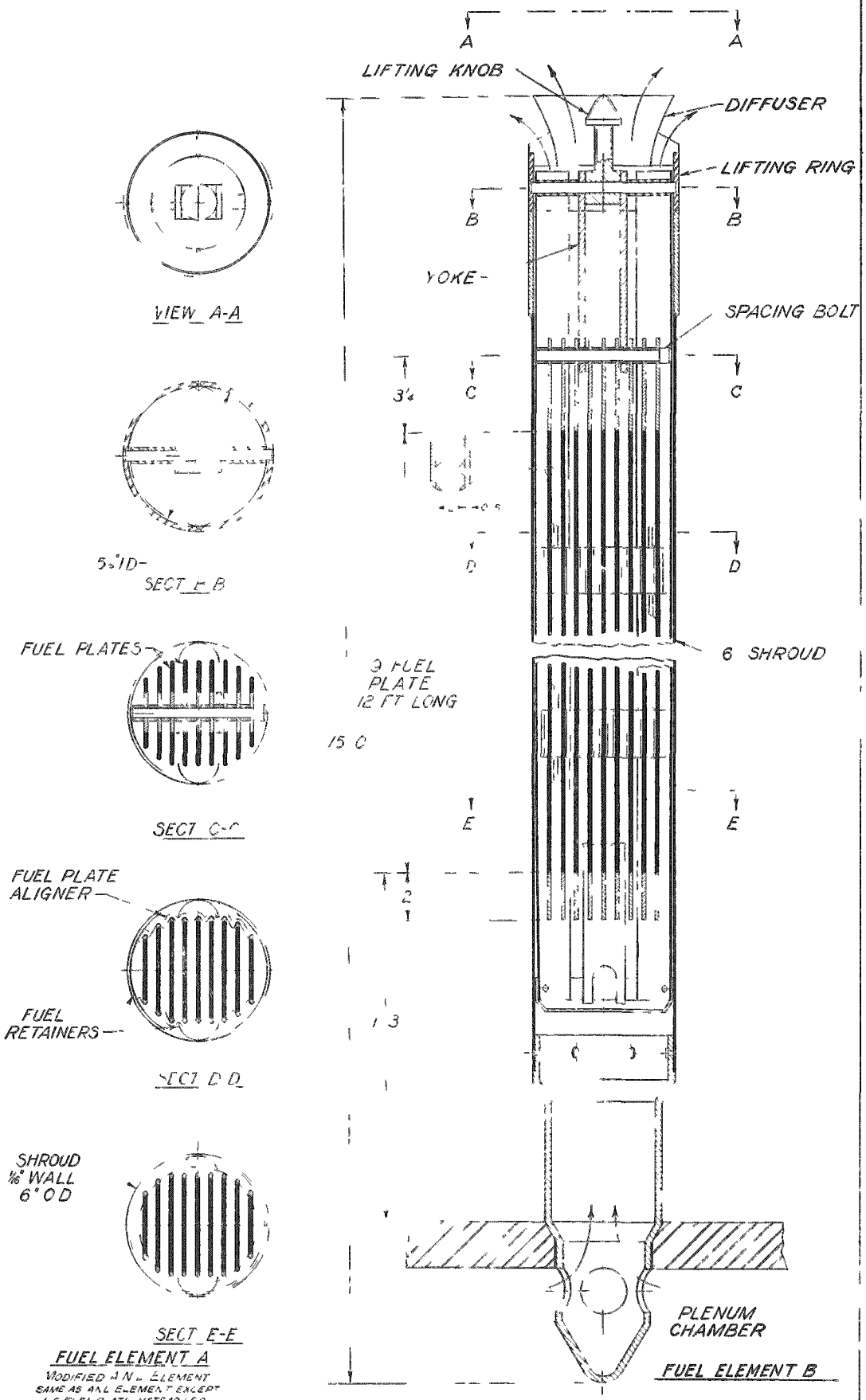

ANL ELEMENT AND MODIFICATIONS

FIG. 3

REF – GENEVA CONFERENCE VOL. III
ISKENDERIAN ET AL

than with Element A, and consequently there is more heat-transfer surface per unit weight of uranium. Element B is more expensive to manufacture but may be necessary at high power outputs when heat transfer is the critical consideration. The same alloy is employed as in Element A. The plates are 0 12 in. thick, clad with 20 mills of Zr. Nine fuel plates with a total width of 29.78 in. are assembled in a 6-in. ID, 1/16-in. thick Zr shroud, with a 0.35-in. water channel between plates. The width of the widest plate is taken as 4.5 in. Element B contains the same amount of uranium per lineal foot as Element A

General Physics Considerations

A detailed description of the methods employed to determine core reactivity as a function of exposure and the isotopic composition of the fuel during exposure is given in Appendix D.

In summary, if a reactor core is considered composed of fuel elements Type A or B, of a certain lattice spacing and total core size, then for a given enrichment the following can be calculated:

1) The reactivity lifetime or the MWD/ton obtainable from physics considerations.
2) Those costs and values which are functions of isotopic content:
   a) value of the metal at time of charging into the reactor
   b) value of the metal at time of discharge
   c) value of the produced Pu at time of discharge
3) Fuel fabrication cost per unit of electric power produced which is inversely proportional to exposure attainable.

Costs from (2) and (3) are necessary to determine the core design and enrichment which would result in minimum fuel-cycle cost.

The lifetime of the reactor loading is calculated by means of the variation in material buckling B^2_{mat}, defined as:

$$B^2_{mat} = \frac{\frac{k_\infty}{k_{eff}} - 1}{M^2}$$

where M^2 is the migration area associated with the lattice under consideration. Since the variation of k_∞ / k_{eff} with exposure level can be calculated (see Appendix D), curves can be constructed of B^2_{mat} as a function of exposure level.

In order for a reactor to remain critical, the material buckling B^2_{mat} must always be equal to or greater than the geometrical buckling B^2_{geom}. Assuming a reflector saving in radius and half-height of 1.1 ft for the core diameters calculated (9 ft to 13 ft), the geometrical buckling can be found as a function of core diameter and height. The reactivity limit of a given core design is that at which the value of the material buckling has fallen to the value of the geometrical buckling.

Values of k_∞ and B^2_{mat} were first calculated for newly charged metal for different enrichments, lattice spacings, and coolant densities. The formulas, cross sections used, etc., are given in Appendix D. All cases calculated employ the "hot" cross sections and include equilibrium Xe and Sm. The boiling cases were considered to have an average density of coolant of 0.66 gm/cc. The pressurized cases are considered to have an average coolant density of 0.95 gm/cc. To illustrate the effect of the variation of coolant density additional boiling cases with an average density of coolant of 0.4 gm/cc were considered. These cases are reported in Appendix D and extend the range over which the control effect of variable recirculation rate is demonstrated.

From such physics calculations, the behavior of the reactor parameters and the isotopic content of the fuel as a function of exposure were calculated. These results yield the maximum obtainable exposure and the fuel-cycle costs.

The cores selected on the basis of physics parameters were then examined carefully from the standpoint of heat transfer to make certain that the choice was suitable from both the physics and heat removal standpoints.

Two buckling curves were calculated for each enrichment. One curve describes the buckling behavior of a core, each element of which begins its irradiation at the same time. The exposure is assumed to be uniform over the core, and the "exposure obtainable" refers to the maximum uniform exposure permitted. When this average exposure is reached, the entire fuel charge is unloaded and new metal charged.

A second curve was calculated for the average buckling of a reactor operated on the basis of continuous charge-discharge when the exposure distribution of the loading has reached equilibrium. In this mode of operation it is assumed that the loading is composed of a mixture of fuel elements whose exposures are uniformly distributed between zero and the maximum allowable exposure. The average buckling for any region is taken as the volume-weighted average of the

elements composing the region. Under the above assumption this "average buckling" is simply the running average of the batch loading buckling curve.

The assumption was made that practical operation was possible in the continuous charge-discharge case with $k_{eff} = 1$ and in the one-batch loading for all k_{eff}'s down to and including $k_{eff} = 1$.

For the extreme case of a base load plant whose power is never varied and which, upon being shut down, remains down for 40 hours or more, the assumption of operation with $k_{eff} = 1$ is close to feasible. The effect of the xenon transient after shut-down is illustrated in the section on xenon transients below.

Heat Transfer

The selection of permissible heat fluxes in both pressurized and boiling water reactors is at present rather complicated because of a variety of steady- and unsteady-state conditions which must be considered. In pressurized reactors, a great deal of work has been carried out on the burn-out effect; that is, the localized formation of a vapor film adjacent to the fuel element surface and eventual melting of the metal. However, the design heat flux is usually only a fraction of the burn-out value because of non-uniformities possible in actual operation and because of unsteady-state effects. For example, in the Shippingport PWR design, heat flux was apparently limited by imposing a restriction of no film boiling if the primary coolant pumps failed. In the boiling case, instability caused by chugging will limit heat flux and permissible void fraction.

Design heat fluxes published for reactors presently proposed are as follows:

Boiling	Average Heat Flux,[1] Btu/hr-sq ft
EBWR	44,000 - 100,000[2]
Dresden	120,000[3]
Elk River	74,000

1 Raytheon Corporation, "Nuclear Reactor Data," 2nd Ed., 1956.
2 The design average heat flux for EBWR was 44,000. However, in a heavy water design for the EBWR (H. P. Iskenderian, "20-EMW D_2O-Moderated Experimental Boiling Water Reactor Design Studies," ANL-5685, Feb. 1, 1957), it is assumed that an average flux of 100,000 is achievable. The large gap existing in general between the design average and the burn-out heat flux is illustrated by the fact that the burn-out heat flux for EBWR is 750,000.
3 Based on an assumed maximum to average flux ratio of 2.5.

16

Pressurized	Average Heat Flux,[1] Btu/hr-sq ft
PWR (Blanket)	65,000 - 100,000
Yankee	100,000
Consolidated Edison	169,000
Belgian Thermal Reactor	96,000
Canadian D_2O NPD Initial Design[4]	~100,000

Based on these values, it was concluded that use of an average heat flux of 120,000 Btu/hr-sq ft would be appropriate for both boiling and pressurized reactor types, in view of the uncertainties inherent in the present knowledge of reactor heat transfer and also because it was desired to compare reactor economics with existing designs on a comparable degree of conservatism.

For the reactor output desired, several possible core designs were selected which gave low fuel-cycle costs and were within the heat transfer limitation described above. A comparison was then made of the cost of capital plant, heavy water inventory and losses, and fuel-cycle cost at various turbine pressures to determine the optimum core design and turbine pressure. Preliminary study of several other variables such as condenser back-pressure and feedwater heating temperature indicated that use of constant reasonable values for these items would not cause serious deviation from the optimum design.

III. RESULTS AND DISCUSSION

Core Design

As described previously, the initial phase of this study consisted of general core-design calculations to determine the effect of (a) core diameter, (b) enrichment, (c) fuel element design, and (d) lattice spacing on fuel-cycle cost. The degree of enrichment affects the fuel-cycle cost only, while the three other variables listed also affect the plant cost, heat transfer capability, and D_2O inventory costs. Thus, as a starting point in the analysis, it is of interest to determine the enrichment which results in minimum fuel-cycle cost with core diameter, fuel element design, and lattice spacing as parameters.

---

[1] Raytheon Corporation, "Nuclear Reactor Data," 2nd Ed., 1956.
[4] C. Kennedy, "Atomic Energy in Canada," AECL Publication, 1956.

Tables I and II* are arranged in this manner to show the results of the physics calculations on boiling and pressurized cores, respectively.

Maximum Exposure Levels Attainable

Because of the large fixed cost involved in fabricating fuel elements, the attainable energy release per ton of fuel (that is, the exposure level) is of major importance in determining the fuel-cycle cost in mills/kwh. The maximum exposure levels permitted by available reactivity are shown for two fuel loading methods - one-batch loading and continuous charge-discharge.

The infinite multiplication factor, k_∞, which measures reactivity, may rise initially due to plutonium build-up and then in all cases falls because of neutron absorption by fission products and the eventual depletion of fissionable material. Of the four factors (i.e., $\eta \varepsilon pf$) composing k_∞, ε and p are assumed independent of exposure level, and thus the variation of the product ηf can be used to show changes in reactivity.

Values of ηf as a function of exposure level are shown in Figures 4 and 5 for three typical boiling and pressurized cores. Complete tabulations of the reactor physics results for fresh metal in the cores studied are included in Appendix D, as well as the geometrical bucklings for various core designs. (See Tables D-I, D-II, and D-III.)

Figures 5 and 6 show reactivity changes expressed in terms of the material buckling rather than k_∞. Geometrical buckling values for various core diameters are marked on these curves The exposure level corresponding to the geometrical buckling value at a particular core diameter represents the maximum attainable exposure at this diameter.

Figures 7 through 13 show U-235 burn-up, plutonium isotope formation, and the burn-up cost and plutonium credit as a function of exposure level for the illustrative cores.

It may be noted in Tables I and II that the enrichment has a marked effect on the attainable exposure level, as would be expected. With batch loading of boiling cores, the maximum exposure level attainable with natural uranium for the designs investigated was 4,040 MWD/metric ton. Enrichment to 1.1% U-235 will permit exposure levels of over 10,000 MWD/ton based on reactivity considerations.

---

* The results of Tables I and II were calculated using a thermal output of 370 MW and a thermal efficiency of 28.6%, both corresponding roughly to the 100 EMW design. The inventory charge and fuel-cycle cost for other conditions of output and efficiency will vary slightly and have been corrected in the subsequent section in which reference design costs are tabulated.

TABLE I

SUMMARY OF RESULTS FOR BOILING CORES
(Average Coolant Density 0.66 g/cc)

Fuel Element Type A: Six Zr clad plates, each 0.17 in. thick. Total fuel plate width 21 in. Coolant channel width 0.35 in.
Fuel Element Type B: Nine Zr clad plates, each 0.12 in. thick. Total fuel plate width 30 in. Coolant channel width 0.35 in.

		BATCH LOADING						CONTINUOUS CHARGE - DISCHARGE					
				Fuel Cycle Cost, $/Kgm U						Fuel Cycle Cost, $/Kgm U			
Lattice Spacing (in)	Uranium Enrichment % U-235	Maximum Exposure Level, MWD/Metric Ton	Pu Credit at $12/gm	Net Fuel Cost after Pu Credit	Inventory Charge based on 100 EMW output	Total	Fuel Cycle Cost Mills/KWH	Maximum Exposure Level, MWD/Metric Ton	Pu Credit at $12/gm	Net Fuel Cost after Pu Credit	Inventory Charge based on 100 EMW output	Total	Fuel Cycle Cost Mills/KWH
9-ft. Core Diameter													
Fuel Element A													
6	1.5	2,170	25.2	5.5	13.8	108.1	7.24	3,940	43.8	7.4	17.5	116.0	4.29
	1.7	5,520	56.7	3.0	23.4	119.1	3.14	10,350	91.8	19.0	34.7	151.0	2.12
	1.9	7,830	74.3	22.7	32.0	149.6	2.78		Exposure extremely high				
7	0.71		Subcritical						Subcritical				
	0.8		Subcritical					2,810	28.8	-0.4	8.1	96.9	5.02
	0.9	4,270	38.6	3.3	10.3	104.1	3.55	8,150	58.5	-0.2	14.2	107.0	1.91
8	0.71	3,690	31.3	-0.4	7.4	95.5	3.76	7,560	49.1	-9.6	9.8	89.0	1.72
	0.8	5,190	38.6	4.3	9.2	103.9	2.92	10,400	56.2	-6.5	12.8	97.0	1.36
	0.9	6,830	44.7	11.4	11.2	113.8	2.43		Exposure extremely high				
9	0.71	4,690	33.5	1.9	7.4	98.0	3.21	9,290	48.8	-9.4	9.7	89.0	1.40
	0.8	6,020	37.8	8.6	8.8	107.8	2.61	12,650	54.9	-5.0	12.5	98.0	1.13
	0.9	7,450	39.9	16.8	10.6	117.9	2.31		Exposure extremely high				
Fuel Element B													
7	0.71		Subcritical						Subcritical				
	0.8		Subcritical						Subcritical				
	0.9		Subcritical						Subcritical				
	1.1	4,490	40.7	9.1	14.2	132.0	4.28	8,780	65.6	8.3	20.0	140.1	2.32
8	0.71		Subcritical						Subcritical				
	0.8	3,910	33.4	3.0	9.9	120.7	4.48	7,370	50.4	-0.4	12.7	120.2	2.51
	0.9	5,580	41.5	8.9	12.1	129.9	3.39	11,300	61.4	1.3	17.9	127.8	1.65
	1.0	7,170	47.8	16.4	14.5	140.6	2.84		Exposure extremely high				
	1.1	8,660	52.9	24.7	17.1	152.1	2.46		Exposure extremely high				
	1.3	11,600	61.3	44.2	22.9	178.4	2.24		Exposure extremely high				
11-ft. Core Diameter													
Fuel Element A													
6	1.5	4,540	49.3	7.8	26.5	126.1	4.04	8,570	79.8	10.0	41.6	147.2	2.50
	1.7	8,270	76.1	16.1	44.4	155.6	2.84		Exposure extremely high				
	1.9	10,260	90.6	25.9	60.3	183.2	2.60		Exposure extremely high				
7	0.71		Subcritical						Subcritical				
	0.8	3,450	33.5	-0.9	11.3	100.2	4.23	6,450	51.7	-6.1	16.3	102.3	2.31
	0.9	5,510	46.1	2.8	16.1	110.3	2.91	10,700	67.7	-5.0	25.5	112.6	1.53
8	0.71	4,630	36.7	-2.1	10.4	97.5	3.06	9,630	53.8	-14.3	16.2	91.2	1.38
	0.8	6,120	42.9	2.8	13.4	107.1	2.55	12,500	60.1	-10.1	21.5	102.6	1.20
	0.9	7,690	48.1	10.6	16.8	119.0	2.25		Exposure extremely high				
9	0.71	5,430	36.7	0.7	10.1	100.0	2.68	11,280	52.2	-12.8	15.6	91.9	1.19
	0.8	6,760	40.5	9.5	12.4	110.6	2.38		Exposure extremely high				
	0.9	8,160	42.3	16.4	15.2	122.6	2.19		Exposure extremely high				
Fuel Element B													
7	0.71		Subcritical						Subcritical				
	0.8		Subcritical						Subcritical				
	0.9	1,870	21.7	1.1	11.2	118.6	9.21	2,390	26.3	1.2	12.2	120.3	7.32
	1.1	6,210	52.1	9.2	23.5	142.8	3.35	12,300	42.3	6.6	38.4	158.4	1.88
8	0.71	3,240	29.8	-1.6	10.7	115.4	5.18	5,870	44.5	-5.1	14.4	115.5	2.87
	0.8	5,030	35.6	2.0	14.2	124.8	3.62	9,930	58.1	-8.1	21.7	122.5	1.80
	0.9	6,700	46.5	8.4	18.1	136.0	2.95	13,700	65.5	-2.7	29.6	136.7	1.46
	1.0	8,270	52.2	16.3	22.2	148.7	2.62		Exposure extremely high				
	1.1	9,750	56.5	25.4	26.6	162.6	2.43		Exposure extremely high				
	1.3	12,700	59.2	45.6	36.5	193.7	2.22		Exposure extremely high				
13-ft. Core Diameter													
Fuel Element A													
6	1.5	6,010	61.1	9.8	46.8	149.9	3.63	11,600	98.2	8.9	81.4	188.3	2.37
	1.7	9,210	84.3	17.9	75.2	189.2	2.99		Exposure extremely high				
	1.9	11,850	100.5	27.6	104.5	230.3	2.83		Exposure extremely high				
7	0.71		Subcritical						Subcritical				
	0.8	4,300	37.5	-2.0	17.4	105.7	3.58	8,200	59.3	[illegible]	28.1	109.8	1.95
	0.9	6,260	50.1	2.0	24.8	118.7	2.76	12,440	72.1	-9.4	43.5	126.8	1.48
8	0.71	5,180	39.6	-3.1	15.0	101.5	2.85	11,030	57.9	-13.[illegible]	26.2	97.6	1.29
	0.8	6,670	45.1	2.1	19.6	113.0	2.47	13,800	61.9	-11.9	34.6	114.1	1.21
	0.9	8,270	49.9	10.2	25.1	127.1	2.24		Exposure extremely high				
9	0.71	5,950	38.7	-1.2	14.1	102.3	2.50	12,540	53.9	-14.4	24.0	99.0	1.15
	0.8	7,220	42.0	6.0	17.6	114.4	2.31		Exposure extremely high				
	0.9	8,710	44.2	16.2	21.9	129.3	2.16		Exposure extremely high				
Fuel Element B													
7	0.71		Subcritical						Subcritical				
	0.8		Subcritical						Subcritical				
	0.9	3,340	34.4	0.9	19.0	127.8	5.57	5,350	48.5	-1.1	26.1	134.7	3.67
	1.1	7,240	58.2	9.2	37.6	157.6	3.17		Exposure extremely high				
8	0.71	4,040	34.7	-2.8	15.5	119.7	4.32	7,590	51.7	-12.2	23.8	118.7	2.28
	0.8	5,690	43.0	1.2	20.9	131.1	3.36	11,470	61.5	-11.6	35.5	133.2	1.69
	0.9	7,370	49.3	7.8	27.0	144.7	2.86		Exposure extremely high				
	1.0	8,960	54.5	16.2	33.6	160.3	2.61		Exposure extremely high				
	1.1	10,500	58.9	25.5	40.8	177.3	2.46		Exposure extremely high				
	1.3	13,400	65.7	46.1	56.7	214.7	2.33		Exposure extremely high				

TABLE II

SUMMARY OF RESULTS FOR PRESSURIZED (NON-BOILING) CORES
(Average Coolant Density 0.95 g/cc)

Fuel Element Type A: Six Zr clad plates, each 0.17 in. thick. Total fuel plate width 21 in. Coolant channel width 0.35 in.
Fuel Element Type B: Nine Zr clad plates, each 0.12 in. thick. Total fuel plate width 30 in. Coolant channel width 0.35 in.

		BATCH LOADING						CONTINUOUS CHARGE DISCHARGE					
			Fuel Cycle Cost, $/Kgm U						Fuel Cycle Cost, $/Kgm U				
Lattice Spacing (in)	Uranium Enrichment % U-235	Maximum Exposure Level, MWD/Metric Ton	Pu Credit at $12/gm	Net Fuel Cost after Pu Credit	Inventory Charge based on 100 EMW output	Total	Fuel Cycle Cost Mills/KWH	Maximum Exposure Level, MWD/Metric Ton	Pu Credit at $12/gm	Net Fuel Cost after Pu Credit	Inventory Charge based on 100 EMW output	Total	Fuel Cycle Cost Mills/KWH
9-ft. Core Diameter													
Fuel Element A													
6	1.5	11,160	82.2	27.8	32.4	156.1	2.04		Exposure extremely high				
7	0.71	3,710	33.7	-3.1	8.1	93.9	3.68	5,230	42.4	-5.0	9.4	94.3	2.62
	0.8	4,790	39.0	1.4	9.5	101.5	3.08	9,370	57.8	-9.8	14.1	97.2	1.51
	0.9	5,780	44.0	7.5	11.8	110.4	2.78		Exposure extremely high				
8	0.71	4,740	34.8	0.6	8.0	97.6	3.00	9,430	50.9	-13.5	11.1	88.5	1.37
	0.8	6,170	40.1	6.7	9.8	107.2	2.53	12,850	56.3	-8.4	14.5	98.8	1.12
	0.9	7,630	44.3	15.1	11.9	118.2	2.25		Exposure extremely high				
9	0.71	5,040	33.3	3.5	7.6	99.9	2.88	10,650	50.3	-12.8	10.4	88.5	1.21
	0.8	6,500	38.0	9.9	9.1	109.4	2.45		Exposure extremely high				
Fuel Element B													
7	0.71		Subcritical						Subcritical				
	0.8	3,120	31.0	-0.6	10.0	117.0	5.46	5,510	46.1	-3.4	12.6	118.6	3.22
	0.9	5,130	43.1	4.3	13.1	126.5	3.58	10,050	64.2	-3.4	19.0	127.3	1.84
	1.0	6,900	51.0	10.0	16.3	136.3	2.87		Exposure extremely high				
	1.1	8,540	58.7	17.2	19.7	147.9	2.52		Exposure extremely high				
	1.3	11,520	69.5	33.5	27.0	172.8	2.18		Exposure extremely high				
8	0.71	4,020	32.7	-0.2	9.2	115.7	4.18	7,720	48.7	-11.2	12.1	109.6	2.07
	0.8	5,620	39.8	4.5	11.3	124.4	3.22	11,300	56.8	-8.9	16.0	117.8	1.50
	0.9	7,110	44.8	12.5	13.5	135.2	2.77		Exposure extremely high				
	1.0	8,520	48.7	21.4	15.8	147.0	2.51		Exposure extremely high				
	1.1	10,140	53.2	30.7	18.5	159.5	2.30		Exposure extremely high				
	1.3	12,720	58.9	53.0	24.2	188.2	2.17		Exposure extremely high				
11-ft. Core Diameter													
Fuel Element A													
6	1.5	12,510	87.7	28.4	56.6	181.6	2.11		Exposure extremely high				
7	0.71	4,690	39.4	-5.1	12.1	96.6	3.00	7,360	51.9	-14.4	16.2	92.9	1.84
	0.8	5,700	43.7	.4	15.0	106.6	2.72	11,330	62.2	-14.3	24.5	103.6	1.33
	0.9	6,650	47.9						Exposure extremely high				
8	0.71	5,490	38.4	-1.0	11.4	99.8	2.65	11,140	54.0	-16.5	18.0	92.8	1.21
	0.8	6,870	42.6	5.6	14.3	110.9	2.35		Exposure extremely high				
	0.9	8,360	46.8	14.4	17.7	123.6	2.13		Exposure extremely high				
9	0.71	5,950	37.1	0.8	10.6	100.6	2.46	12,510	55.1	-17.6	16.7	90.6	1.05
	0.8	7,170	40.2	7.7	12.9	111.2	2.26		Exposure extremely high				
Fuel Element B													
7	0.71		Subcritical						Subcritical				
	0.8	4,200	36.9	-1.3	15.0	121.9	4.23	7,940	57.2	-9.3	22.4	123.9	2.27
	0.9	6,170	48.8	3.3	20.4	133.4	3.14	12,340	70.7	-9.9	33.7	136.3	1.61
	1.0	7,830	55.3	9.8	25.6	146.0	2.72		Exposure extremely high				
	1.1	9,540	62.3	17.3	31.6	160.3	2.45		Exposure extremely high				
	1.3	12,560	72.6	34.4	44.5	191.6	2.22		Exposure extremely high				
8	0.71	4,850	37.0	-1.5	12.9	118.6	3.56	9,540	53.6	-16.1	19.6	112.8	1.72
	0.8	6,370	42.9	3.6	16.3	128.9	2.94	13,070	59.3	-11.4	26.6	126.3	1.41
	0.9	7,880	47.4	11.9	20.1	141.6	2.61		Exposure extremely high				
	1.0	9,250	51.0	21.3	23.9	155.2	2.44		Exposure extremely high				
	1.1	10,750	55.2	30.7	28.4	169.7	2.30		Exposure extremely high				
	1.3	13,420	60.3	53.5	38.1	202.8	2.20		Exposure extremely high				
13-ft. Core Diameter													
Fuel Element A													
6	1.5	13,360	91.1	29.3	92.7	219.0	2.39		Exposure extremely high				
7	0.71	5,240	42.6	-6.3	18.1	101.0	2.81	8,690	56.5	-19.1	26.8	99.4	1.67
	0.8	6,230	46.3	-0.6	22.7	113.5	2.65	12,620	64.4	-16.4	40.3	117.6	1.36
	0.9	7,210	50.1	6.5	27.7	126.1	2.55		Exposure extremely high				
8	0.71	5,990	40.6	-3.1	16.6	103.2	2.51	12,180	55.3	-17.9	28.4	102.0	1.22
	0.8	7,330	44.2	5.0	21.0	117.1	2.32		Exposure extremely high				
	0.9	8,760	48.2	13.8	26.2	131.7	2.19		Exposure extremely high				
9	0.71	6,560	39.1	-1.6	15.0	102.8	2.28	13,730	57.3	-19.8	25.8	97.8	1.04
	0.8	7,630	41.5	6.4	18.2	116.5	2.22		Exposure extremely high				
Fuel Element B													
7	0.71		Subcritical						Subcritical				
	0.8	4,850	40.0	-2.2	22.5	129.0	3.87	9,320	62.0	-14.1	37.2	134.5	2.10
	0.9	6,760	51.3	2.8	31.1	144.0	3.10	13,850	74.0	-13.2	56.1	155.8	1.64
	1.0	8,430	58.0	9.4	39.6	159.9	2.76		Exposure extremely high				
	1.1	10,140	64.6	17.0	49.4	178.1	2.56		Exposure extremely high				
	1.3	13,300	74.3	35.0	70.8	218.7	2.40		Exposure extremely high				
8	0.71	5,370	39.6	-3.1	18.6	123.1	3.34	10,600	55.5	-18.1	30.5	122.0	1.68
	0.8	6,800	43.7	2.9	23.7	135.8	2.90		Exposure extremely high				
	0.9	8,380	49.1	11.1	29.8	150.7	2.62		Exposure extremely high				
	1.0	8,780	52.4	20.8	36.0	167.0	2.49		Exposure extremely high				
	1.1	11,270	55.9	30.7	43.3	184.6	2.38		Exposure extremely high				
	1.3	13,900	60.9	53.3	58.5	223.1	2.34		Exposure extremely high				

20

Figure 4

ηf vs. MWD/Metric Ton

Fuel Element B, 8" Lattice Spacing, Boiling

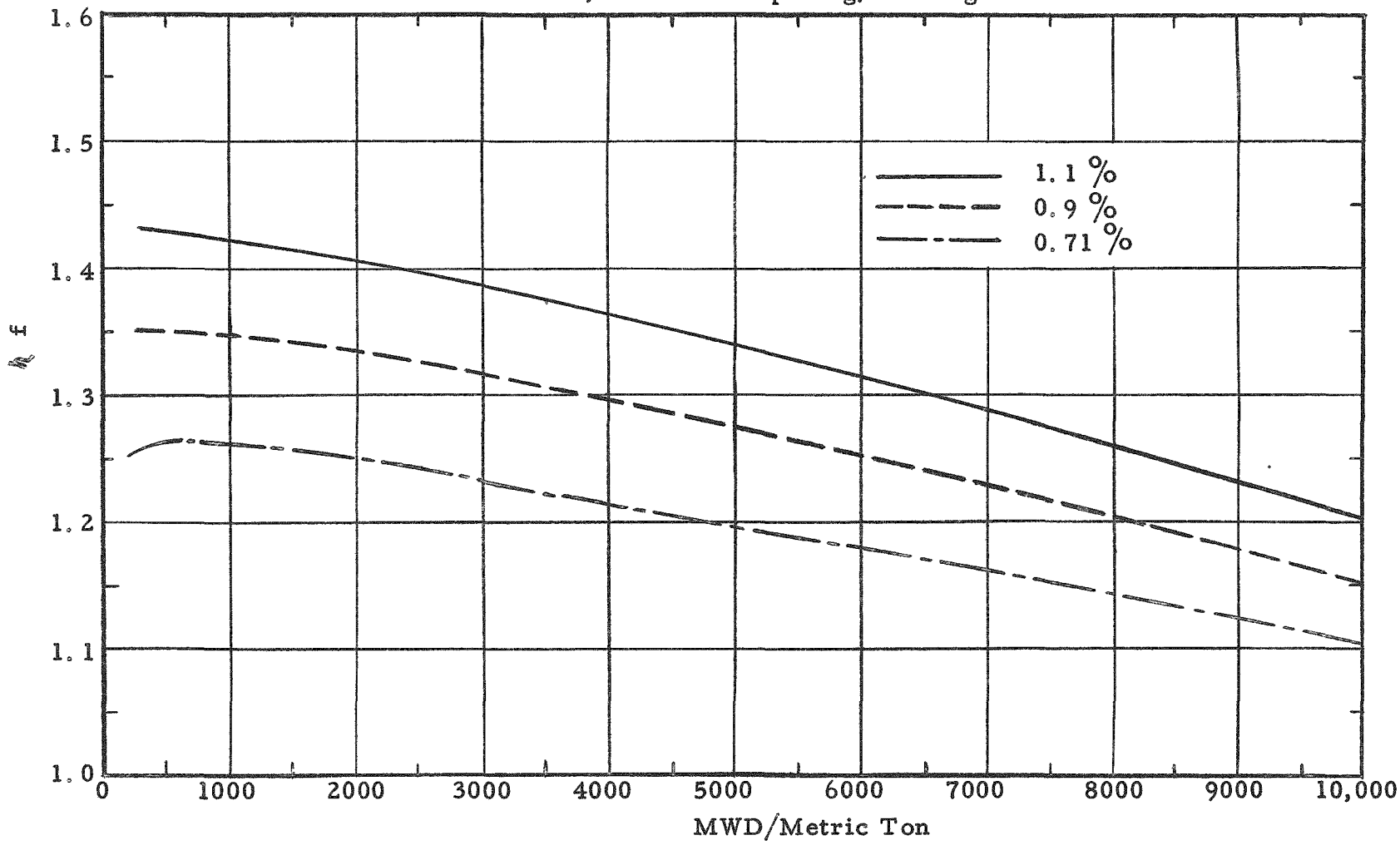

Figure 5

ηf vs. MWD/Metric Ton

Fuel Element B, 8" Lattice Spacing, Pressurized

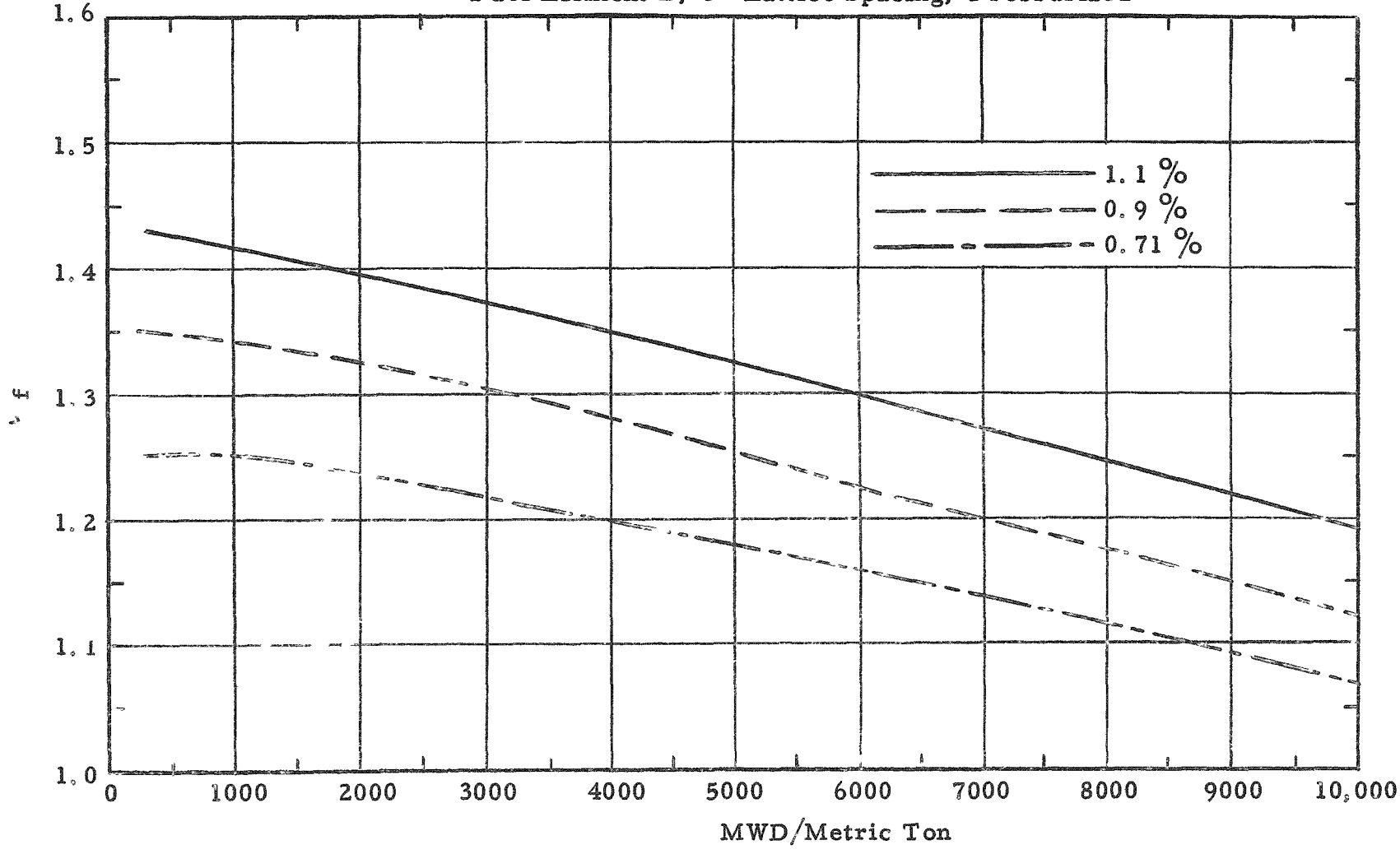

Figure 6

Material Buckling vs. MWD Metric Ton

Fuel Element B, 8" Lattice Spacing, Boiling

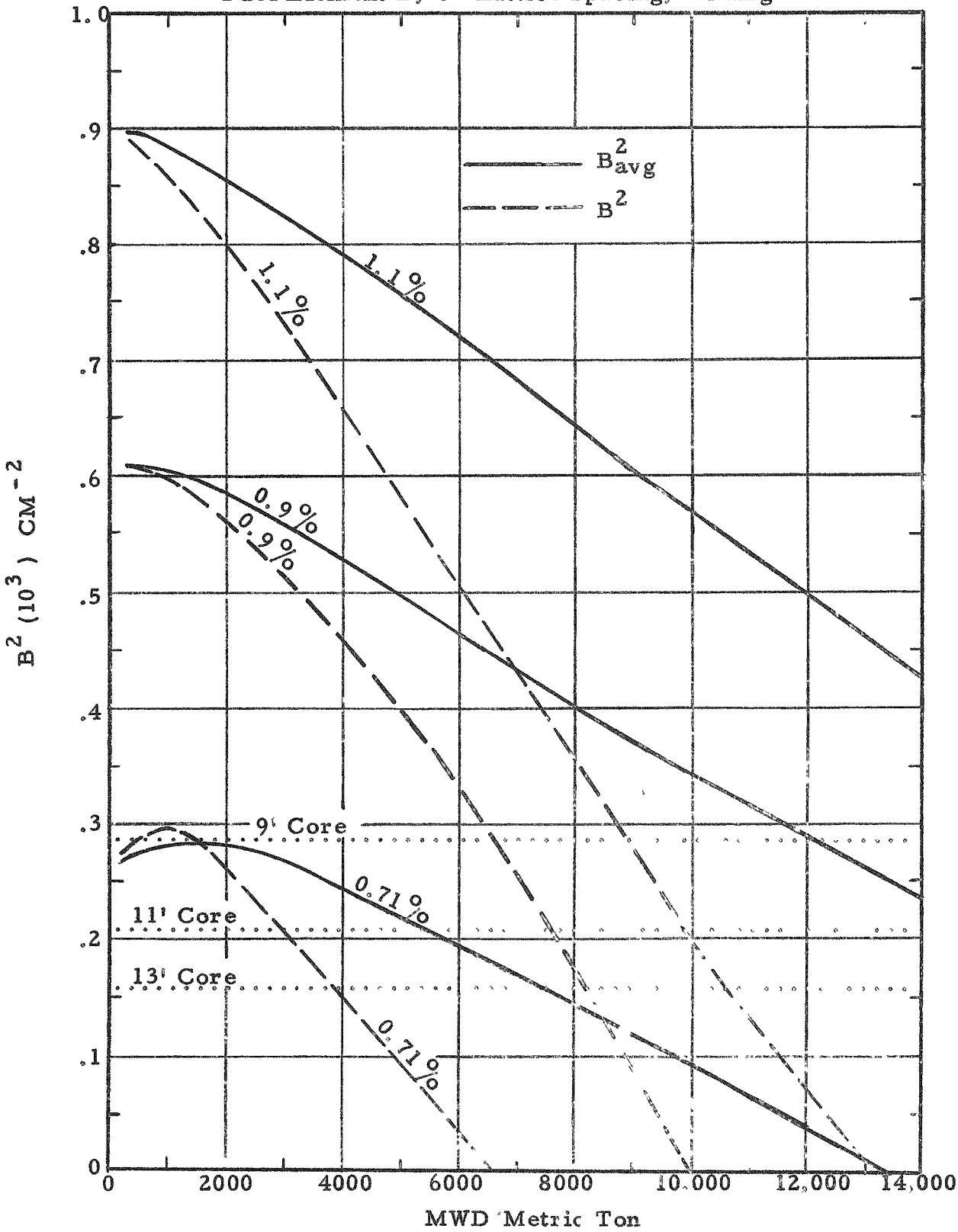

23

Figure 7

Material Buckling vs. MWD/Metric Ton

Fuel Element B, 8" Lattice Spacing, Pressurized

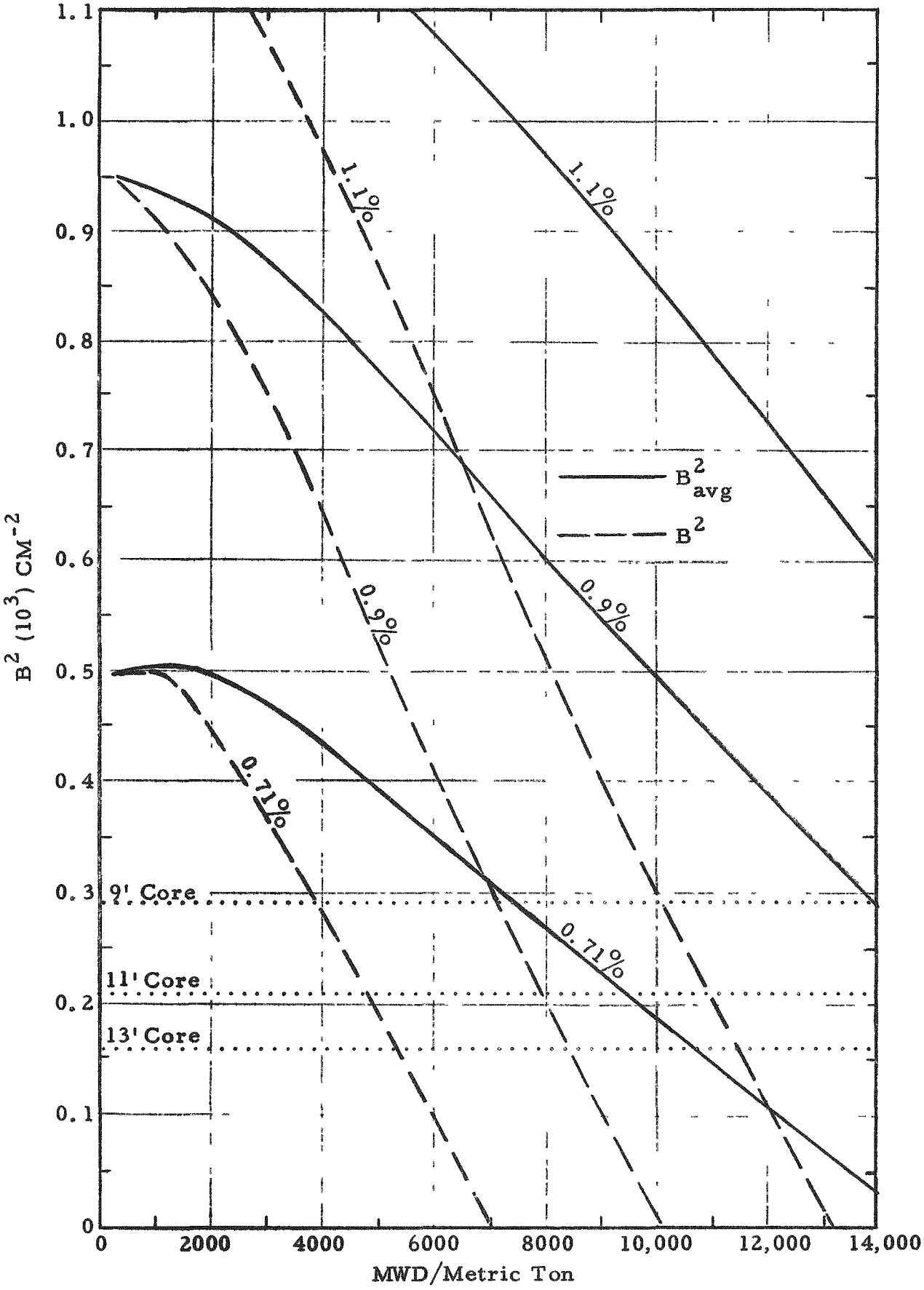

Figure 8

Ratio of U^{235} Remaining to Initial U^{235} vs. MWD/Metric Ton

Fuel Element B, 8" Lattice Spacing, Pressurized

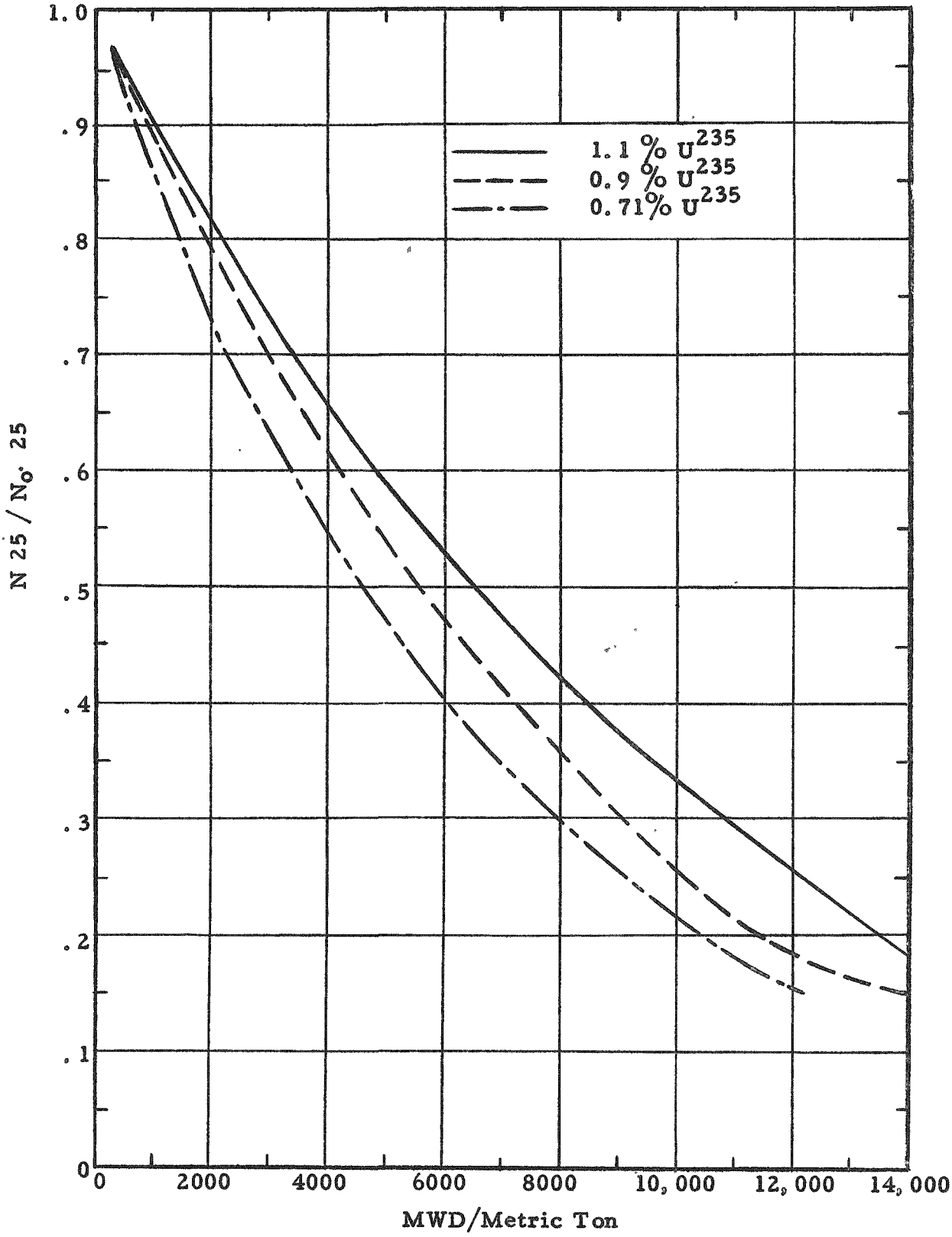

25

Figure 9

Ratio of U^{235} Remaining to Initial U^{235} vs. MWD/Metric Ton

Fuel Element B, 8" Lattice Spacing, Boiling

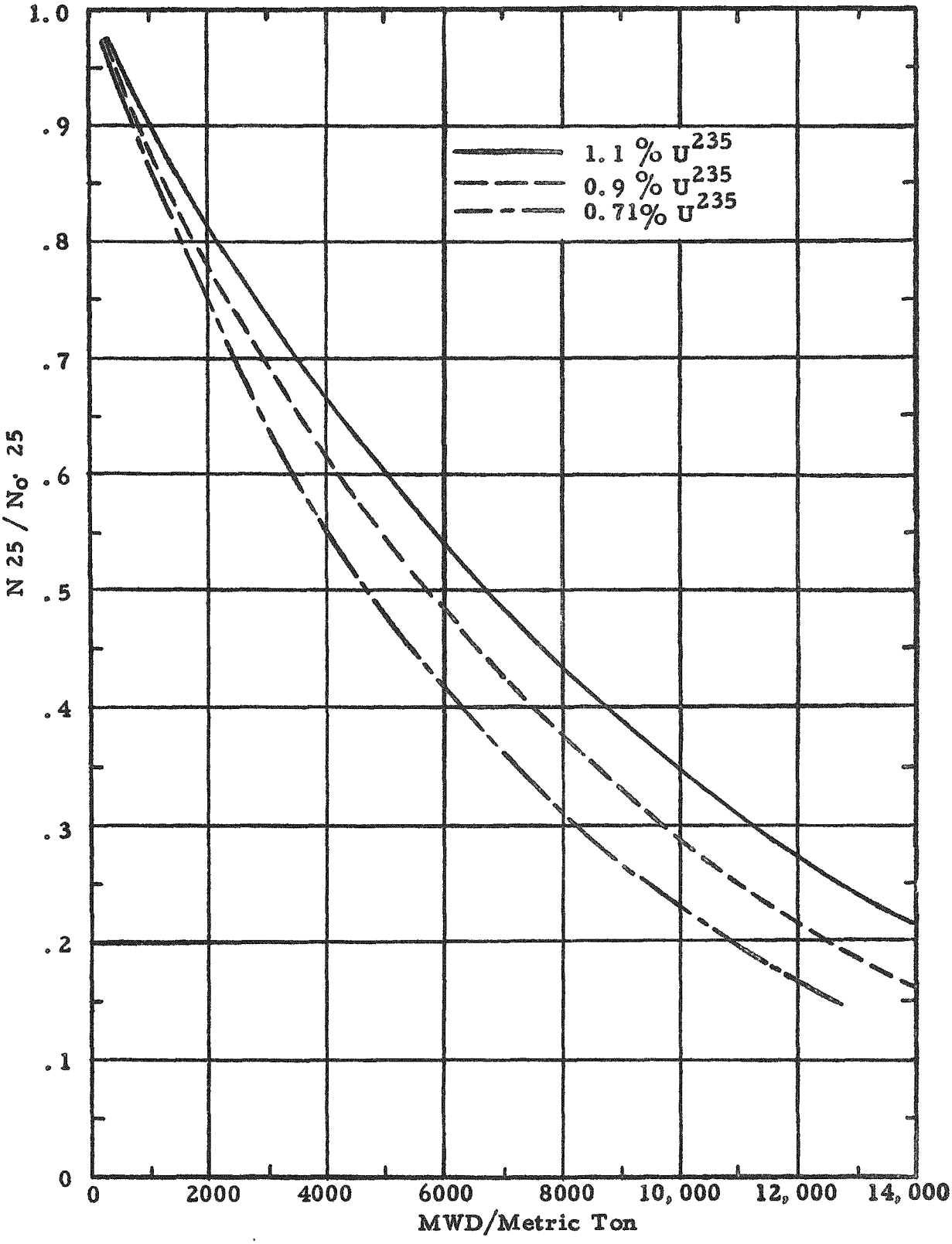

Figure 10

26

Grams/Metric Ton of Pu Isotopes vs. MWD/Metric Ton

Fuel Element B, 8" Lattice Spacing, Pressurized

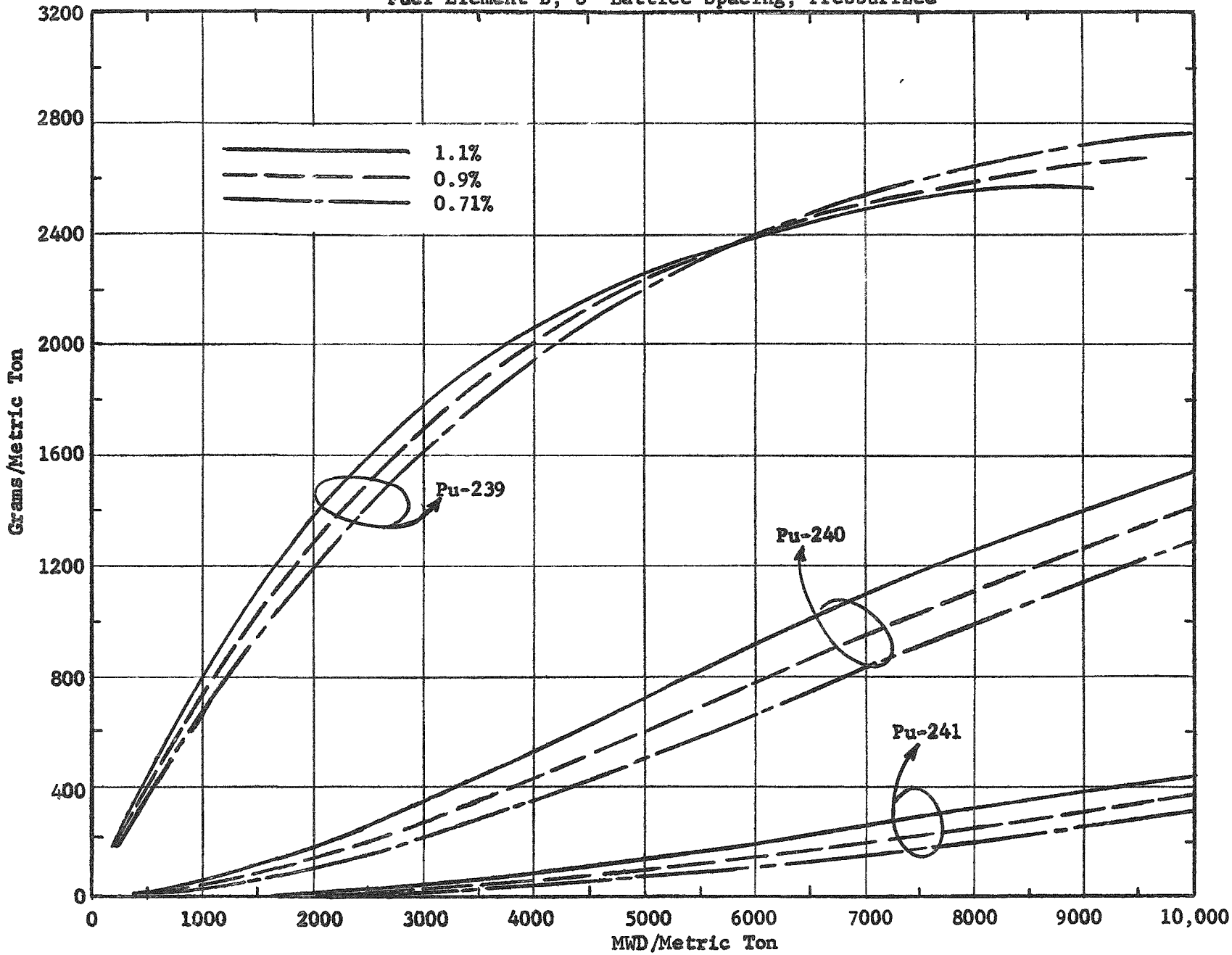

27

Figure 11

Grams/Metric Ton of Pu Isotopes vs. MWD/Metric Ton

Fuel Element B, 8" Lattice Spacing, Boiling

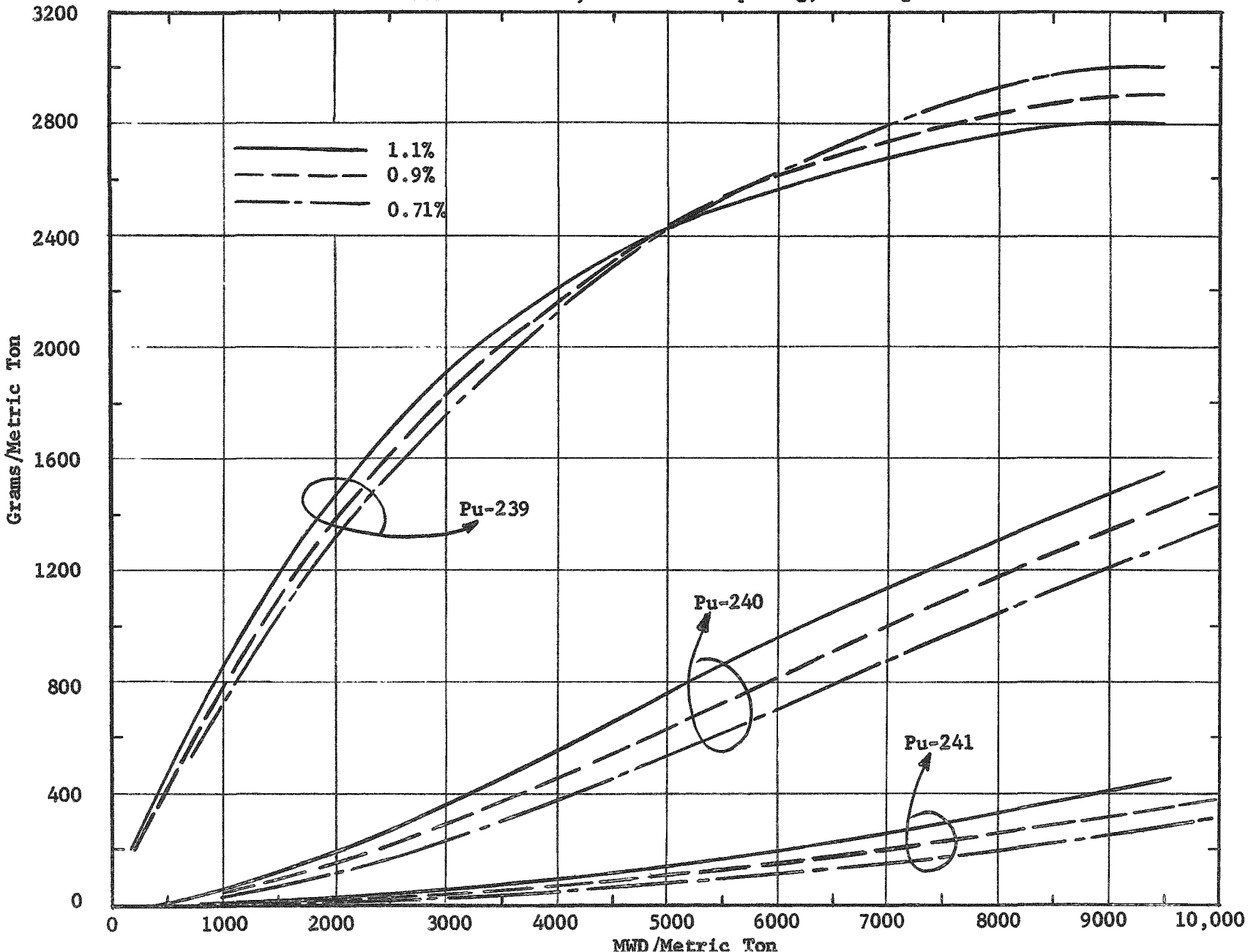

Figure 12

Uranium and Pu Value vs. MWD/Metric Ton

Fuel Element B, 8" Lattice Spacing, Boiling
Separative Work at $37.50/kg, Pu as Metal at $12/gram
Tails Concentration at 0.22 wt. % U-235

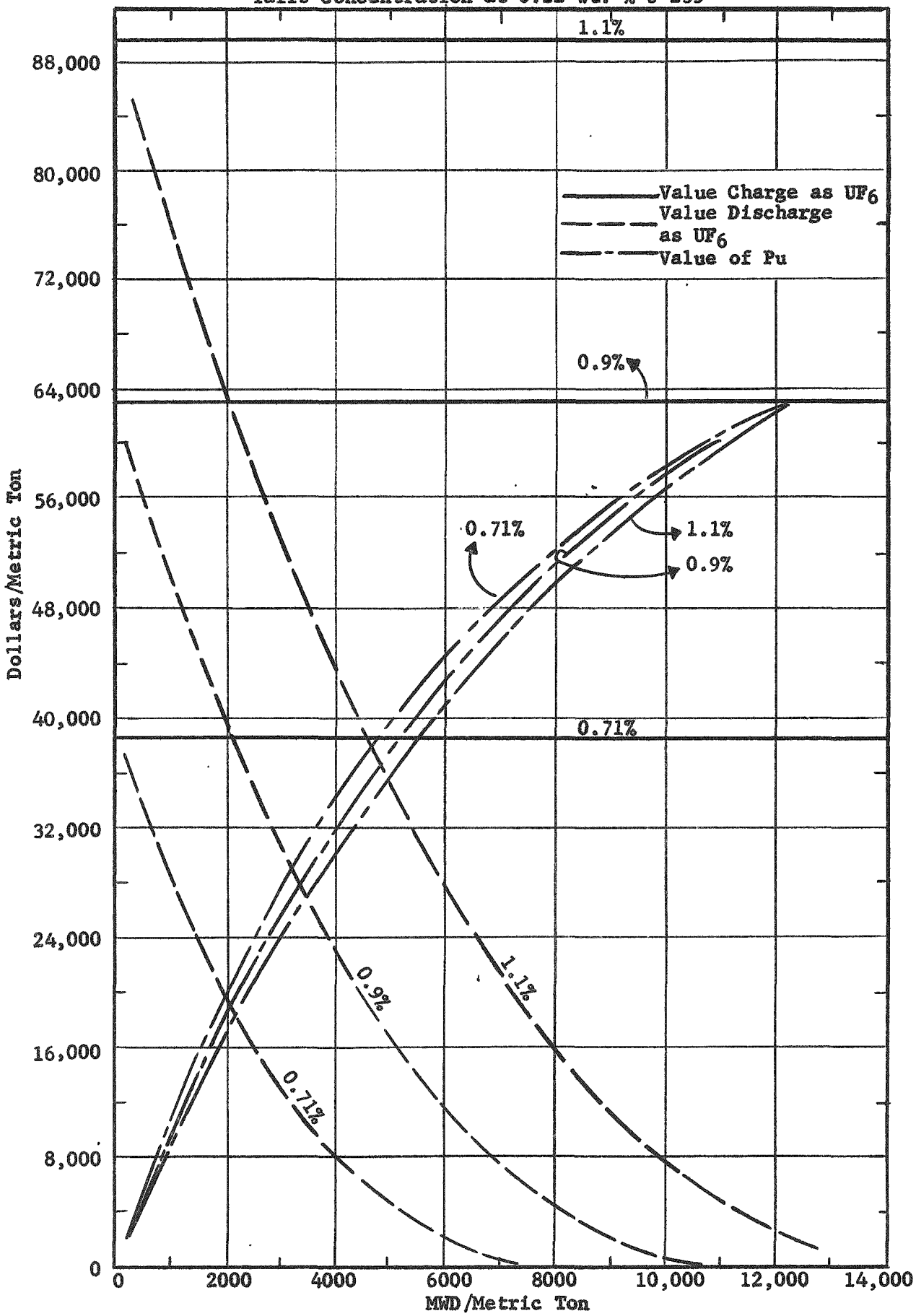

29

Figure 13

Uranium and Pu Value vs. MWD/Metric Ton

Fuel Element B, 8" Lattice Spacing, Pressurized
Separative Work at $37.50/kg, Pu as Metal at $12/gm
Tails Concentration at 0.2? wt % U-235

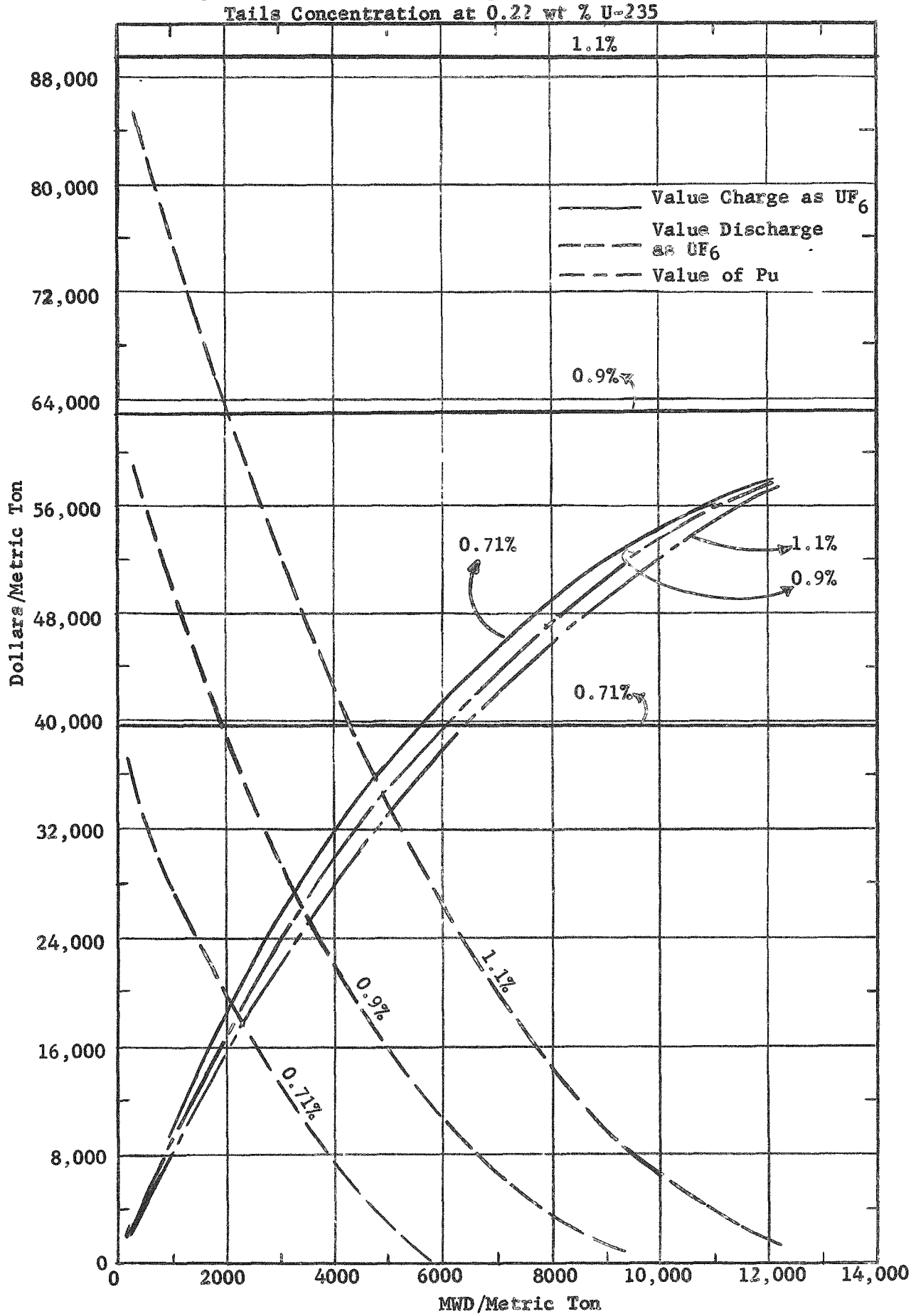

In the continuous charge-discharge case, it appears possible to achieve exposure levels of above 10,000 MWD/ton with natural uranium, as has also been predicted by groups at Argonne and Chalk River.[1,2]

Pressurized (non-boiling) cores of the same fuel element type and lattice spacing will have somewhat longer reactivity lifetimes than boiling cores because of the greater amount of moderator present and lower neutron loss. Also, the greater the clumping (reduction of fuel surface-to-mass ratio) and the larger the lattice spacing, the longer is the reactivity lifetime at a given enrichment. This occurs because the resonance escape probability, k_∞, and material buckling all increase with lattice spacing, although at the expense of less plutonium production. Lewis[2] concludes that the use of a large lattice spacing results in increased buckling at the start of irradiation, and this is preferable to mitigating the loss of reactivity with exposure by increasing plutonium production.

Relatively small variations in the values of certain of the constants employed in the reactor physics calculations may have a considerable effect on the calculated reactivity lifetimes, and much additional experimental data would be desirable to corroborate the results presented here. Two particular points of caution should be noted:

1) The physics calculations were based on the assumption of a uniform exposure (flat flux) over the core and hence are somewhat optimistic. In an actual reactor, various flattening measures such as graded enrichment zones could be employed, although this would result at best in incomplete flattening. Flattening by use of a graded lattice spacing would also be feasible.

2) A k_{eff} of 1.0 was assumed adequate at the reactivity limit, where presumably the control rods would be entirely out.

Xenon Transients

Some attention was devoted to the effect of xenon transients on the necessary excess reactivity. An example was calculated of the material buckling transient for a boiling lattice composed of Type B fuel elements on 8-in. centers, utilizing fuel of 1% enrichment. It was assumed that the reactor was operating

---

1 H. P. Iskenderian, et al., Geneva Conference Paper, P/495, Vol. 3 (1955)
2 W. B. Lewis, "Low Cost Fuelling Without Recycling," AECL 382, December, 1956.

on newly charged metal with equilibrium xenon and samarium at a power density of 25 MW/metric ton. The reactor was then assumed to be shut down in a negligibly short time, and the xenon transient shown by Figure 14 would ensue. The curve gives the material buckling available at any time if the reactor could be returned to full power in a negligibly short period.

Assuming the general shape of the buckling transient due to xenon to be the same for any point in the exposure history of the loading, the following observations may be made:

1) The geometrical buckling required for criticality is roughly 150 microbucks, and the newly charged metal lattice has about 750 microbucks of reactivity. Hence 600 microbucks are available for exposure at the start, and from Figure 14 a maximum of only about half of this (300 microbucks) is lost to the xenon transient. Therefore, with the unirradiated fuel the reactor could be immediately re-started at any time. Immediate start-up at any time would continue to be possible through approximately half the exposure life of the fuel, but then a shutdown in the vicinity of 10 hours in length would become impossible, and on further exposure the "barred" shutdown period would gradually expand until at the reactivity lifetime of the fuel it would cover roughly 36 hours.

2) In the boiling cores, the formation of steam bubbles and reduction in coolant density from 0.95 gm/cc to 0.66 gm/cc causes a loss in material buckling of about 400 microbucks. Since only 300 microbucks are required to override xenon at any time, a boiling reactor could be re-started at maximum xenon override and be brought up to at least one-quarter the usual bubble density (and hence usual power) with the 100 microbucks available in excess of that needed for xenon. (By increasing the recirculation rate in the core, even higher powers could be achieved at a constant bubble density.)

The requirement that maximum and instantaneous xenon override be available at all times is quite stringent. It could limit the attainable reactivity lifetimes markedly and hence increase fuel-cycle costs. This effect could be relaxed by permitting shutdowns and start-ups in which the power is changed gradually with time rather than requiring a fast start-up. When more reactivity is available in a reactor at low power than at high power, due to boiling voids or temperature effects, the reactor can be re-started sooner and the power gradually raised. Xenon burn-up is thus added to natural decay to hasten the reduction in transient xenon.

Figure 14

Xenon Transient for Case of 1% Enrichment
Fuel Element B, 8" Lattice Spacing, Boiling, 23 MW/T, at Start of Fuel Cycle

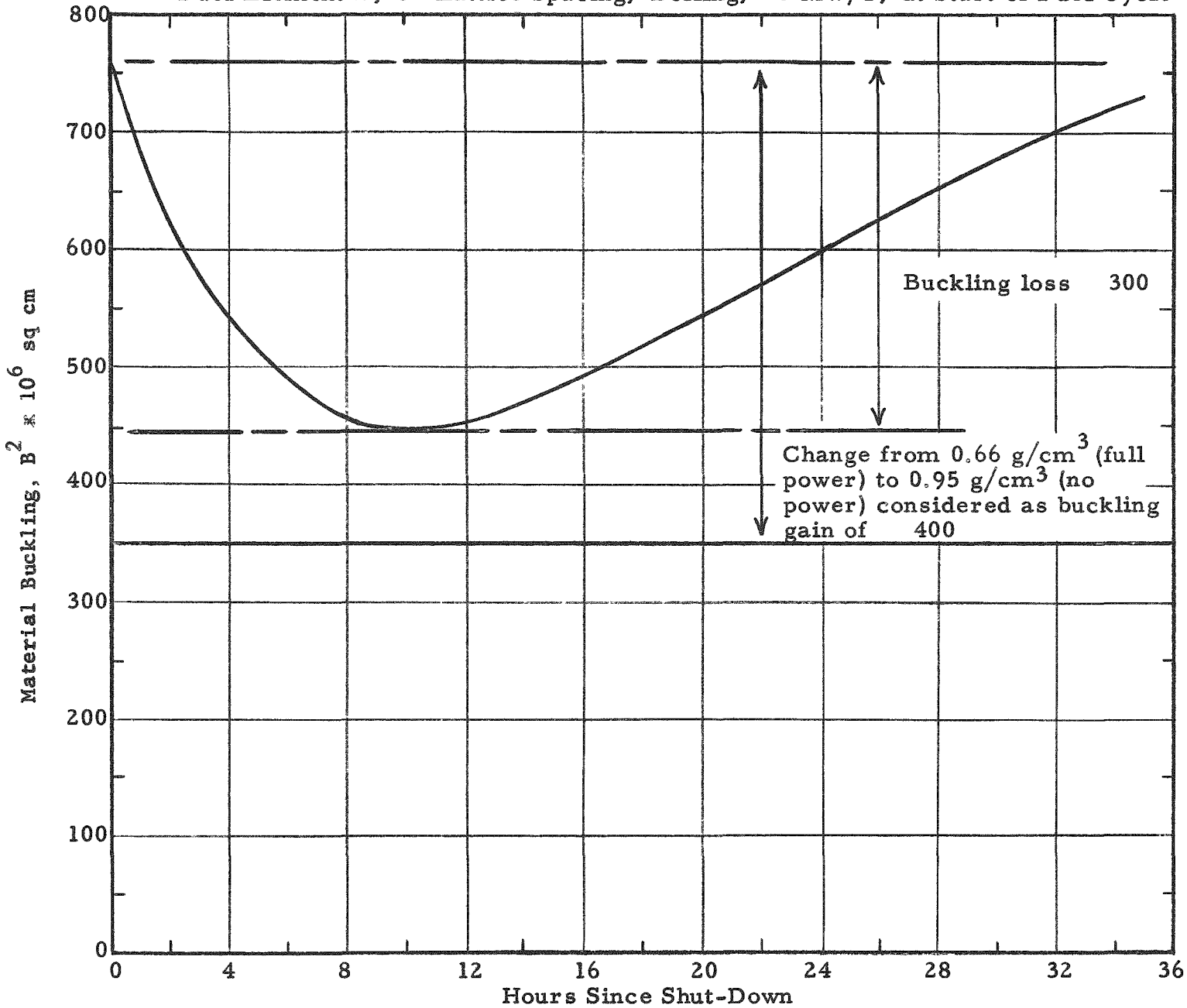

Fuel Cycle Economics

The core design resulting in minimum power generating cost represents a balance among several varying cost factors. The general effects of changing core parameters may be summarized as follows:

Change	Beneficial Effects	Detrimental Effects
1) Increased enrichment.	1) Longer exposure level. Closer lattice spacing. Smaller core and D_2O inventory.	1) Higher burn-up cost. Higher inventory charge.
2) Increased lattice spacing.	2) Longer exposure level.	2) Higher net fuel burn-up cost due to decreased plutonium production. Larger core and D_2O inventory.
3) Increased fuel clumping.	3) Lower burn-up and fabrication cost. Lower critical mass. Longer exposure.	3) Less heat transfer area (hence larger core required.)

Figures 8 through 13 show, for typical cores, the variation of U-235 depletion, plutonium build-up, and net fuel burn-up cost with exposure level. The effect of core design on the fuel-cycle costs is shown in Tables I and II. The following conclusions may be drawn from the tabulated values (as will be discussed later, it is important to note that these conclusions are quite sensitive to the assumed values of such factors as fuel fabrication costs, radiation damage limits, and plutonium credit):

1) In all cases considered, the use of enriched uranium results in a lower total fuel-cycle cost than the employment of natural uranium, if there is no radiation damage limit. In the one-batch loading of pressurized cores, a maximum reactivity lifetime of 6,560 MWD/metric ton was calculated for natural uranium (Case 13-A-9).* This value is in agreement with estimates given us by Savannah River and Hanford.

---

* For convenience, core designs in Tables I and II are referred to by diameter-fuel element-lattice spacing sequence, e.g., 13-A-9.

2) The optimum degree of enrichment for the one-batch loading cases is above 1%. In every case for which results were available, net fuel-cycle costs decreased steadily with enrichment but appeared to be leveling off in the vicinity of 1.3%. For the continuous charge-discharge cases the optimum enrichment is lower, perhaps 0.8 or 0.9% U-235. This is because with continuous charge-discharge the exposure levels at any given enrichment are considerably longer than for the cases of one-batch loading, and hence the higher burn-up costs with enriched materials are of greater importance in the total fuel-cycle cost per kilowatt hour.

3) As expected, Fuel Element A, because of the greater degree of uranium clumping and the lower fabrication cost of the thicker plate, shows lower fuel-cycle costs for a given lattice spacing and enrichment than does Fuel Element B. (However, Fuel Element B has greater heat transfer surface and may be required at large power outputs).

4) At a given lattice spacing and enrichment, increasing the core diameter will result initially in a decrease and then occasionally in a slight increase in fuel-cycle cost because of the counteracting effects of exposure level and fuel inventory charge. (See Cases 9-B-8, 11-B-8, and 13-B-8 at 1.3% enrichment in the boiling cores.) Since larger cores raise the reactor capital cost and heavy water inventory charge markedly, it is usually more economic for any particular lattice spacing and enrichment to use as small a core as permitted by heat transfer considerations.

5) In many cases a desired exposure level can be achieved either by the use of a relatively large lattice spacing or by increasing the enrichment. The fuel-cycle cost alone is roughly 0.1 to 0.3 mills/kwh lower if a given exposure level is achieved by a wider lattice spacing. However, in most cores heat transfer is the limiting factor, and the <u>total</u> power-generating cost is usually lower if a fairly close-packed lattice is used along with sufficient enrichment to permit a long exposure level.

6) Because of the excellent neutron economy of heavy water reactors, the fuel element fabrication cost and the inventory charges are considerably more important than the net fuel cost after plutonium credit.

7) With the fabrication costs assumed, it appears that in reactors operated by one-batch loading, fuel-cycle costs of between 2.1 and 2.5 mills/kwh are readily attainable if radiation damage does not limit exposure level. In the continuous charge-discharge case, a fuel-cycle cost of slightly more than 1.1 mills is achievable, providing the fuel element can withstand perhaps 12,000 MWD/ton before failing metallurgically.

Figure 15 shows the effect of enrichment on the fuel-cycle cost for a typical core design. The dotted lines fanning out from the origin are generalized "indifference curves" (constant cost curves). Each dotted line is the locus of various combinations of exposure levels and per-kilogram fuel-cycle costs which result in the indicated constant unit fuel-cycle costs per unit of electrical energy produced (mills/kwh). The exposure levels and per-kilogram fuel-cycle costs actually attainable with the illustrative core at various enrichments are represented by the points on the operating curve, with bar graphs showing the cost breakdown*

Although the per-kilogram fuel-cycle costs are higher for the enriched cores, the extension of the attainable exposure level results in an over-all reduction in mills/kwh. It will be noted, however, that at higher enrichments the net fuel cost and inventory charges become important, so that there is an optimum enrichment resulting in the lowest fuel-cycle cost in mills/kwh. Minimum fuel-cycle cost is achieved at the point where the operating curve becomes tangent to the adjacent indifference line. This would occur in the example shown at somewhere slightly beyond 1.3% enrichment, with a minimum fuel-cycle cost of about 2.2 mills/kwh.

Since the fixed cost for fuel fabrication represents a major portion of the per-kilogram fuel-cycle cost, it will be found in general that the minimum-cost point will occur at high exposure levels, i.e., in the upper-right portion of the indifference diagrams such as Figure 15.

In the continuous charge-discharge cases, exposure levels with natural uranium are considerably longer than in the one-batch loadings. Here again, however, there is an apparent advantage in enrichment.

Reference Reactor Designs

With the results of the physics parameter survey as a guide to the core designs having low fuel-cycle costs, other design variables in the reactor-turbogenerator system were then considered. Feasible core designs from the

---

* As shown by the bar graphs, the processing and fabrication cost is somewhat lower for normal uranium, since conversion to UF_6 for passage through the diffusion plant before reduction to metal is unnecessary. This cost rises slightly at higher enrichments, because included in it is the conversion of the increasing amounts of plutonium from nitrate to metal.

Figure 15

Effect of Enrichment on Fuel Cycle Cost

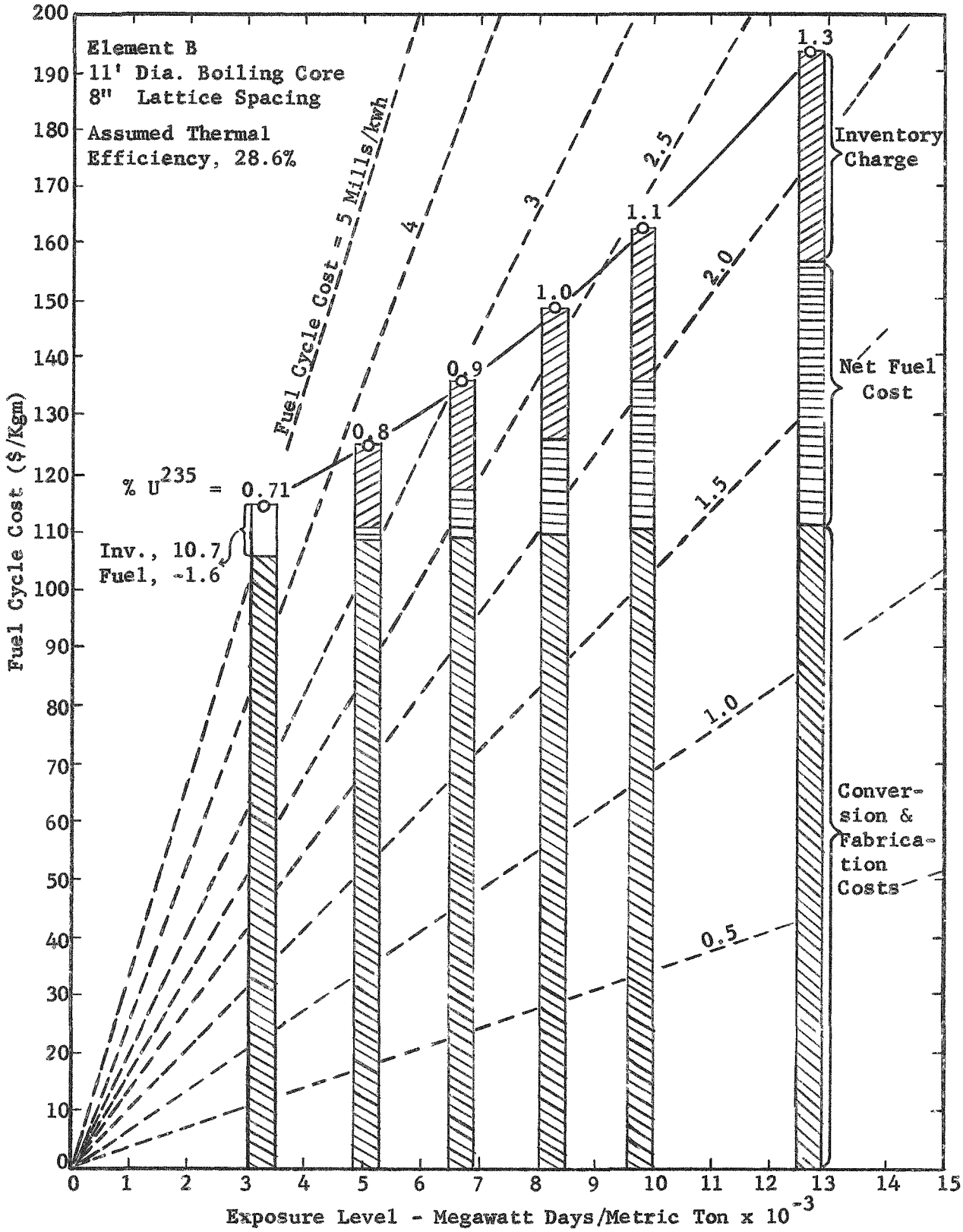

standpoint of heat transfer were determined and core selections for the reference designs were made on an economic basis.

Heat Transfer

As discussed previously, there is no satisfactory way of arriving at permissible heat fluxes in a reactor without a lengthy and detailed analysis of many possible operating conditions. Hence permissible average heat fluxes of 120,000 Btu/hr-sq ft were assumed in order to place the reference reactor designs presented here on a comparable basis of conservatism with existing boiling and pressurized reactors.

Under this assumption of limiting heat flux, the minimum core diameters required for heat transfer can be calculated:

Electrical MW	Lattice Spacing (In.)	Required Core Diameter (Ft) Element A	Element B
20	6	5.5	4.9
	7	6.1	5.4
	8	6.7	5.9
	9	7.2	6.4
100	6	9.5	8.4
	7	10.4	9.3
	8	11.4	10.1
	9	12.3	11.0
250	6	12.5	11.1
	7	13.7	12.2
	8	15.0	13.4
	9	16.2	14.5

Core Selection

For each power output, several combinations of fuel element type, lattice spacing, and required core diameter were selected which resulted in low fuel-cycle costs. As explained in more detail in Appendix A, equipment sizes and plant thermal efficiencies were then calculated and the designs compared to find that design yielding the lowest total power generating cost.

Table III shows the calculations for the 100 EMW boiling reactor, one-batch loading. Consideration of the designs compared indicate that by use of higher enrichment cores than those calculated, the fuel-cycle cost for the cases involving Fuel Element A might be reduced considerably. From the total costs shown in the last column, Fuel Element B with an 8-in. lattice spacing and Fuel Element A with a 7-in. or an 8-in. lattice spacing all give about the same power costs at a given exposure level. This cost would be roughly 11.0 mills/kwh

TABLE III

SELECTION OF OPTIMUM 100 EMW BOILING REACTOR DESIGN, ONE-BATCH LOADING

Fuel Element	Lattice Spacing (in.)	Enrichment (% U^{235})	Attainable Exposure Level (MWD/Metric Ton)	Vessel Dia. (ft)	Turbine Pressure (psig)	Plant Efficiency (%)	Total Capital Cost ($MM)	Mills per kilowatt-hour*				
								Capital Charge	Fuel Cycle Cost	D_2O Inventory Charge	D_2O Losses	Total
A	7	0.9	5,500	13	400	29	30.6	6.56	2.87	1.38	0.80	11.61
					600	30	31.4	6.73	2.77	1.38	0.979	11.87
					800	31	32.5	6.96	2.68	1.38	1.13	12.15
	8	0.9	7,900	14	400	29	30.9	6.60	2.22	1.58	0.863	11.26
					600	30	32.0	6.82	2.14	1.58	1.06	11.60
					800	31	33.1	7.06	2.07	1.58	1.22	11.93
	9	0.9	8,700	15	400	29	31.3	6.68	2.13	1.82	0.93	11.56
					600	30	32.6	6.96	2.06	1.82	1.14	11.98
					800	31	33.7	7.20	1.99	1.82	1.31	12.32
B	7	1.1	5,300	12	400	29	30.3	6.50	3.75	1.26	0.73	12.24
					600	30	31.1	6.67	3.62	1.26	0.90	12.45
					800	31	32.0	6.86	3.51	1.26	1.03	12.66
	8	1.3	12,700	13	400	29	30.6	6.56	2.19	1.38	0.80	10.93
					600	30	31.4	6.73	2.12	1.38	0.979	11.21
					800	31	32.5	6.96	2.05	1.38	1.13	11.52

* These charges are based on: (a) capital charge of 15% per dollar-year, (b) carrying charge of 12% for non-nuclear core parts and D_2O, (c) rental of fuel from AEC at 4% per dollar-year, and (d) a plant factor of 80%.

at exposure levels near 5,000 MWD/ton and 10.5 mills/kwh in the 10,000 MWD/ton range. In all cases the 400 psi turbine pressure resulted in the lowest power cost, since the additional investment for the higher-pressure plant is larger than the fuel-cost saving at the better thermal efficiency.

In the continuous charge-discharge case for the 100 EMW boiling reactor, the same heat-transfer restrictions apply, and so the same combinations of fuel-element type, lattice spacing, and vessel diameter should be examined. The A-7 core benefits relatively more than the others from the longer exposure levels permitted by continuous charge-discharge.

The reference designs for the various reactors as obtained by the above procedure are summarized in Table IV for the one-batch loading method. Figures 16 and 17 show flow diagrams of the boiling and pressurized designs, respectively.

A similar table could be prepared for the continuous charge-discharge cases, although this was not done here. It might be noted that the continuous charge-discharge loading method results in savings in power cost of 1.0 to 1.5 mills, providing the longer exposure levels with this type of loading are metallurgically achievable.

These costs are calculated on the U. S. "private utility" basis noted on Table III.* The 15% capital charge rates used imposes a particularly heavy penalty on D_2O reactors because of their high capital costs. In a later section the effect of lowering this charge rate to that used by other countries will be examined.

20 EMW Designs

It has been generally supposed that D_2O reactors in small size are not particularly economic, and the results shown in Table IV substantiate this. The cost of the pressure vessel and the D_2O inventory charge and losses are all disproportionately high for small power outputs, and the calculated cost of power in both the boiling and pressurized designs is over 20 mills/kwh.

---

* It should be noted that interest on construction funds is not included in these cost totals. This is a legitimate cost and will raise the capital charge item in mills/kwh about 11%.

TABLE IV

SUMMARY OF REFERENCE DESIGNS
(One-Batch Loading)

	20 EMW		100 EMW		250 EMW	
	Boiling	Pressurized	Boiling	Pressurized	Boiling	Pressurized
INITIAL INVESTMENT ($MM)						
Capital cost	10.80	13.90	30.60	37.40	61.70	75.50
Non-nuclear core parts	0.52	0.52	1.75	1.78	4.03	4.03
Heavy water	3.46	3.47	8.06	7.07	11.30	13.16
Total	14.78	17.89	40.41	46.25	77.03	92.69
($ Capital cost/kw)	540	695	306	374	247	302
POWER COST (mills/kwh)						
Capital charge	11.65	14.89	6.56	8.01	5.28	6.43
Fuel-cycle cost	2.47	2.40	2.34	2.30	2.55	2.26
D_2O losses	2.10	1.74	0.80	0.71	0.64	0.45
D_2O inventory	2.97	2.98	1.38	1.21	0.90	0.78
Operating and maintenance	1.80	1.80	1.20	1.20	1.00	1.00
Total	21.00	23.80	12.30	13.40	10.40	10.90
DESIGN CHARACTERISTICS						
Reactor						
Vessel Diameter (ft)	11	11	13	12	15	15
Vessel pressure (psig)	400	1800	400	1800	400	1800
Vessel wall thickness (in)	1.5	6.0	1.80	7.25	2.0	9.0
Core height and diameter (ft)	8	8	10.1	9.3	12.2	12.2
Fuel element type	A	A	B	B	B	B
Lattice spacing (in)	9	9	8	7	7	7
Number of fuel elements	103	103	208	230	396	396
Inside shroud diameter (in)	6	6	6	6	6	6
% U-235	1.2	1.1	1.2	1.2	1.3	1.1
MWD/Metric Ton	10,000	10,000	10,000	10,000	9,000	10,000
Total uranium (metric tons)	9.2	9.2	23.4	23.8	53.8	53.8
D_2O Temperature In (°F)	350*	500	350*	500	350*	500
D_2O Temperature Out (°F)	445	535	445	535	445	535
Average Coolant Density (g/cc)	0.66	0.95	0.66	0.95	0.66	0.95

*Feedwater return temperature

TABLE IV (cont.)

	20 EMW		100 EMW		250 EMW	
	Boiling	Pressurized	Boiling	Pressurized	Boiling	Pressurized
DESIGN CHARACTERISTICS (cont.)						
Heavy Water						
Inventory (metric tons)	56.2	56.4	131	115	214	183
(Kgm/Ekw)	2.81	2.82	1.31	1.15	.856	.732
Losses (metric tons/year)	4.76	3.95	11.1	8.05	18.2	12.8
Heat Transfer						
Average core heat flux (Btu/hr-sq ft)	87,500	87,500	120,000	120,000	120,000	120,000
Reactor heat output (Btu/hr x 10^{-6})	235	235	1,170	1,170	2,940	2,940
Heat Exchanger area (sq ft)	-	3,200	-	16,000	-	40,000
Hydrodynamics						
Coolant velocity in critical channel (ft/sec)	-	8.0	-	13.2	-	20.8
Coolant circulation rate (GPM)	16,400	13,700	82,000	70,200	205,000	185,200
Turbogenerator						
Turbine throttle pressure (psig)	400	400	400	400	400	400
Steam Flow (lb/hr x 10^{-6})	.253	.294	1.34	1.47	3.36	3.68
Condenser pressure (in. Hg)	1.5	1.5	1.5	1.5	1.5	1.5
Overall thermal efficiency (%)	29	29	29	29	29	29

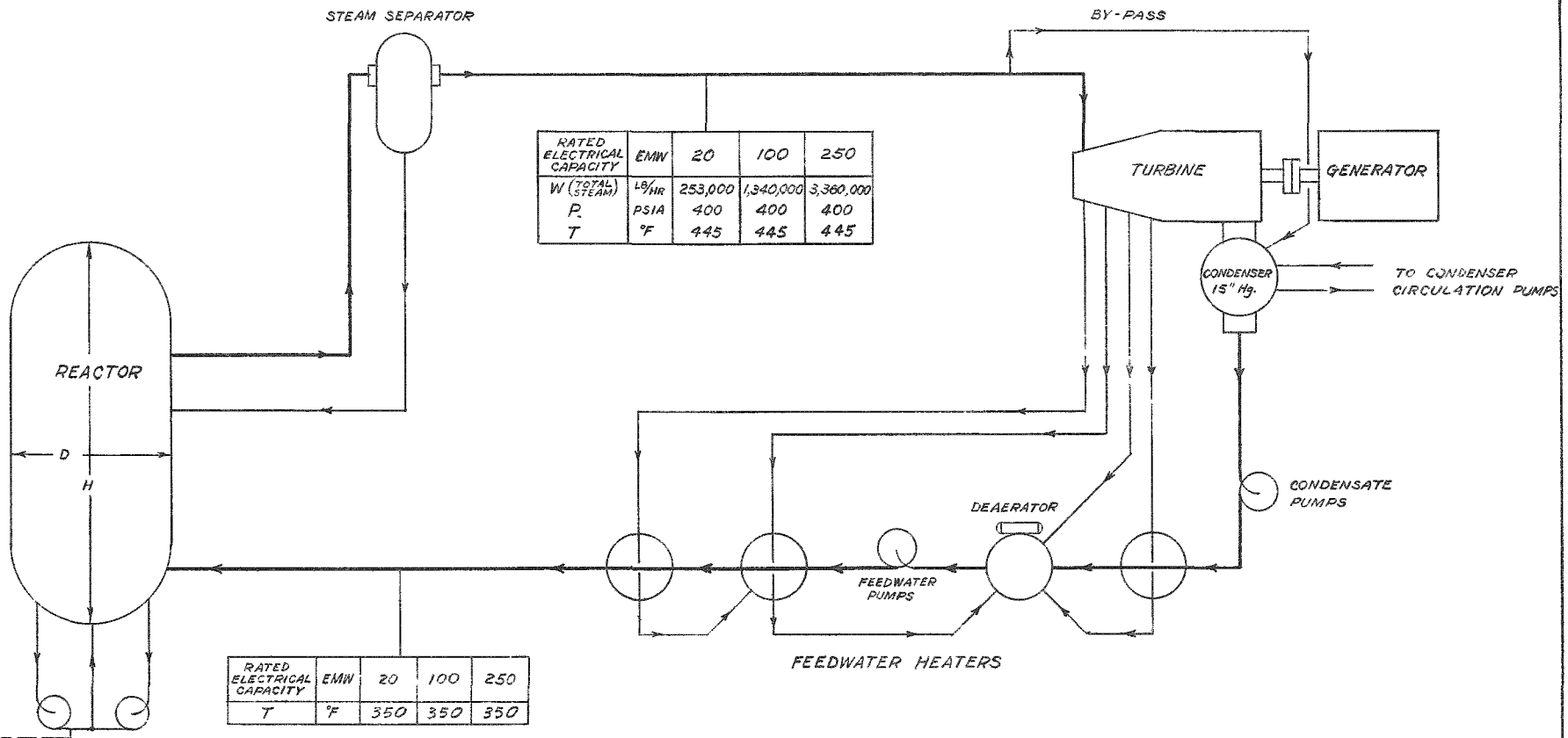

RATED ELECTRICAL CAPACITY	EMW	20	100	250
W (TOTAL STEAM)	LB/HR	253,000	1,340,000	3,360,000
P	PSIA	400	400	400
T	°F	445	445	445

RATED ELECTRICAL CAPACITY	EMW	20	100	250
T	°F	350	350	350

RATED ELECTRICAL CAPACITY	EMW	20	100	250
W	GPM	16,400	82 000	205,000

RATED ELECTRICAL CAPACITY	EMW	20	100	250
REACTOR PRESSURE VESSEL				
INSIDE DIAMETER	FT	11	13	15
INSIDE HEIGHT	FT	30	33	45

FIG. 16

NEXT ASSY		SCALE
DR	YN	3-18-57
CK	DSG	3-19-57
APPD	F.R.M.	
APPD		

FLOW DIAGRAM

BOILING HEAVY WATER REACTOR POWER PLANT

A

AMERICAN-Standard
ATOMIC ENERGY DIVISION REDWOOD CITY, CALIF.

C8-C-106-2

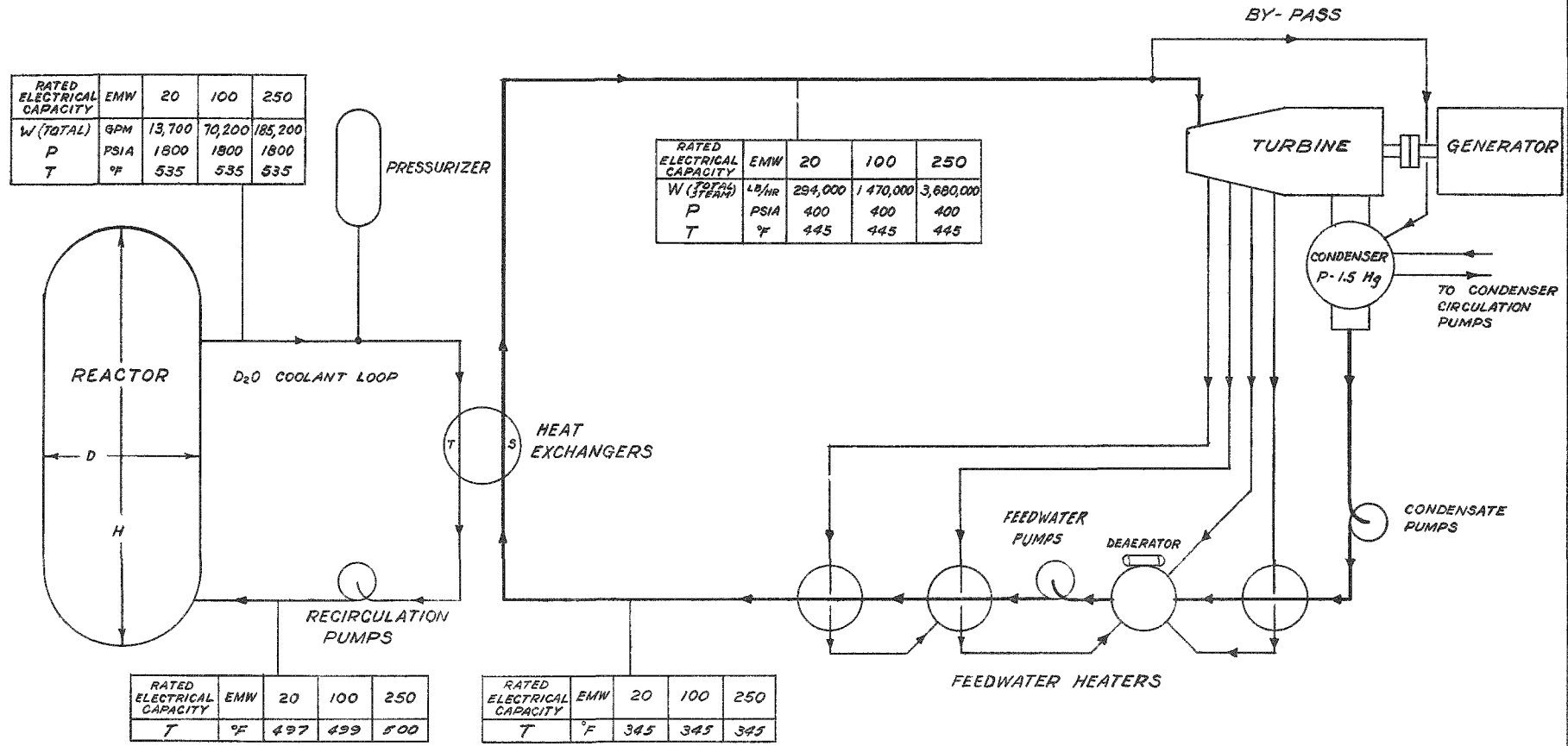

RATED ELECTRICAL CAPACITY	EMW	20	100	250
W (TOTAL)	GPM	13,700	70,200	185,200
P	PSIA	1800	1800	1800
T	°F	535	535	535

RATED ELECTRICAL CAPACITY	EMW	20	100	250
W (TOTAL STEAM)	LB/HR	294,000	1 470,000	3,680,000
P	PSIA	400	400	400
T	°F	445	445	445

RATED ELECTRICAL CAPACITY	EMW	20	100	250
T	°F	497	499	500

RATED ELECTRICAL CAPACITY	EMW	20	100	250
T	°F	345	345	345

FIG. 17

RATED ELECTRICAL CAPACITY	EMW	20	100	250
REACTOR - INSIDE DIAMETER	FT	11	12	15
HEIGHT	FT	27	30	37

NEXT ASSY		SCALE	
DR	LN		
CK	DSG		3 12 57
APPD	[illegible]		
APPD			

FLOW DIAGRAM

PRESSURIZED HEAVY WATER REACTOR POWER PLANT

AMERICAN-Standard
ATOMIC ENERGY DIVISION REDWOOD CITY CALIF

C8-C-107-1

Of the six reference reactor designs, the two 20 EMW reactors were the only ones in which heat transfer was not the limiting factor on core design. As Table IV shows, the 8-ft diameter cores assumed for these reactors were larger than needed to remove the required amount of heat, even with the "clumped" Type A fuel element and a 9-in. lattice spacing.* A fuel element having an even smaller ratio of surface to mass would have been suitable for these core designs and would probably have given a slightly better design, or alternatively the reactor vessel diameter could have been reduced somewhat. However, even a painstaking optimization of this size would undoubtedly still result in power generating cost of at least 20 mills/kwh.

100 EMW Designs

Because of the large effect of size on the unit capital charge, the 100 EMW designs show greatly reduced generating costs compared to the 20 EMW designs. In the 100 EMW size (as in the 250 EMW designs), heat transfer is a limiting factor. It is economic in the boiling 100 EMW design to utilize a 10.1-ft diameter and an 8-in. lattice spacing, but because of the higher pressure in the reactor vessel of the pressurized design, a smaller vessel and tighter pitch are more appropriate. With the higher pressure in the reactor vessel and the additional cost of the heat exchanger, the pressurized 100 EMW design has about 1.5 mills higher capital charge than for the boiling design. However, it shows slightly better fuel economy, and the inventory and losses of heavy water are somewhat smaller than for the boiling design. The net effect is about a 1-mill differential in favor of the boiling design in this size.

250 EMW Designs

The very high heat-generation rates required for this power output necessitate the use of a fairly small lattice pitch in order to stay within the fabricating capability of pressure-vessel manufacturers. Since a 15-ft I.D. vessel appears to be near the upper limit at the present time, both designs were fixed at this vessel size. The small lattice pitch in the boiling case makes a long reactivity lifetime difficult to achieve in the one-batch loading method, and at the highest enrichment studied (1.3% U-235), an exposure level of only 9,000 MWD/metric ton was calculated and is shown on Table IV. This imposes a slight penalty on the

---

* No reactor physics studies were made for cores smaller than 8 ft in diameter in this study. A considerably more detailed analysis of the effect of the reflector becomes necessary in the smaller cores.

250 EMW boiling case, since in all the other cores the enrichment was chosen to permit 10,000 MWD/metric ton for the diameter and lattice pitch used, but the penalty is not much more than 0.1 mill/kwh.

As the reactor output increases, the economic advantage of the boiling type as compared with the pressurized type diminishes, since the effect of the capital cost becomes less important and the pressurized type enjoys a small advantage in the cost of D_2O inventory charge and losses.

A very preliminary cost estimate was carried out for a 500 EMW design. It was assumed that this might be built after sufficient operating experience was obtained with smaller D_2O reactors so that a marked relaxation of the average heat flux limitation of 120,000 Btu/hr-sq ft could be effected. Such a design is discussed briefly in Appendix B. As expected, it shows extremely encouraging power economics because of the low capital cost per kilowatt combined with the low fuel-cycle cost inherent in the D_2O reactor.

Design of Equipment for Heavy Water Reactors

The large pressure vessels and the high cost of heavy water create some special problems in D_2O reactors not possessed by other types. A number of equipment suppliers were consulted, and the results of their recommendations are summarized here and discussed more thoroughly in Appendix B.

Pressure Vessel Design

Particularly for the larger D_2O reactors, the plate thicknesses required for the reactor pressure vessel tax the existing fabrication facilities in the United States to the upper limits of their capacity. The Consolidated Western Steel Division of U. S. Steel Corporation was engaged to study all phases of the pressure-vessel problem, and their report is included as Appendix F. It covers in detail the upper limits of vessel fabrication and the attendant problems and costs. In general, it may be concluded that no insurmountable problems should be encountered in the fabrication of the vessel, although in the larger sizes the vessel must be constructed by welding together a series of forged rings.

One problem which deserves particular attention, however, is that of the gamma heating in the very thick walls required for these pressure vessels. Thermal shields were included in the area surrounding the core of the six

reference reactors described, but the problem would have to be considered much more carefully in the detailed design of a large D_2O reactor.

For the conceptual reactor designs included here, curves were constructed showing the variation in reactor vessel cost as a function of pressure and vessel diameter (see Appendix B).

Pumps, Turbines, and Heat Exchangers

In early D_2O reactor designs, quite elaborate precautions were taken to minimize the inventory and leakage of heavy water. The drop in price of this material from $80 to $28 per pound and the considerable capacity available in the U. S. for supplying heavy water for power reactors makes these earlier stringent measures poor economy under present conditions. After detailed discussions with equipment suppliers, it was felt that the use of conventional equipment, modified with special seals and D_2O collection systems, was the most appropriate design philosophy.

As discussed in more detail in Appendix B, centrifugal pumps were utilized, equipped with special mechanical seals and collection devices to contain D_2O runoff. A special shaft seal was also employed on the turbogenerator and is said to result in a virtually leak-proof machine. The turbogenerator casing was enclosed in a welded metal shell. The additional costs for these features and also for use of saturated steam and for moisture removal were included in the cost estimates.

Heat exchangers for the pressurized designs were provided with special moisture-removal equipment and were also provided with sensitive instrumentation to detect H_2O-D_2O contamination.

Handling and Losses of Heavy Water

In preparing this report, discussions were held with the operators of the Savannah River reactors and with the Argonne CP-5 reactor to determine actual operating experience with the handling and losses of heavy water. Although a few years ago there was considerable apprehension over the possible hazard from the tritium formed in the moderator and coolant, subsequent experience has shown that tritium build-up is relatively small. With the many precautions against leakage taken when D_2O is present, the hazard from tritium is believed to be no greater than from any other form of radioactivity. The heavy water problem, therefore, remains principally one of the minimizing of inventory (and hence of fixed charges), and the reduction of losses.

The required inventory of heavy water was calculated from the dimensions of the equipment used for the reference designs. The expected losses, however, are considerably more difficult to estimate, particularly the figure that should be included for random accidental spillage. It was concluded that the following figures represented a fair estimate of the expected losses for near-term reactor designs (expressed in per cent of total inventory per year):

	Normal Leakage	Accidental Spillage	Total
Pressurized	5%	2%	7%
Boiling	6%	2.5%	8.5%

It might be noted that these loss figures are somewhat higher than other estimates which have been published. Several reactor designs described by the Argonne National Laboratory have included a 5% annual D_2O loss, while the recent figures given for a Canadian 200 EMW power reactor (see Appendix E) has a heavy water loss of only about 2% of the inventory per year.

Tables V and VI summarize the values for heavy water inventory and losses, respectively, used in this report. The total heavy water costs for both inventory and losses range from 1 to 2 mills/kwh in the larger plants and from 4 to 5 mills/kwh in the smaller plants. Hence they represent an appreciable item in any case.

Comparison of Heavy Water Reactor Economics with Other Types

The cost of power from the heavy water reference designs given in Table IV can be compared with the estimated power costs from light water reactors and from the Calder Hall type now in the design or construction phase.

A useful summary of the cost estimates for these other reactor types is contained in the excellent report recently published by the Euratom Advisory Committee.[3] Since the publication of the Euratom report, significant cost increases have been reported for many of the U. S. reactors now under way. (There are no data yet on whether the Calder Hall type, called "PIPPA", by Euratom, will similarly experience significant cost increases, but this would not be surprising.)

The cost totals for heavy water reactors given in Table IV were calculated <u>before</u> the recent U. S. reactor cost increases were publicized and to a certain

---

[3] Euratom Publication, "A Target For Euratom," June, 1957.

TABLE V

HEAVY WATER INVENTORY

	20 EMW	100 EMW	250 EMW
BOILING CASES			
Heavy water in reactor proper - lb	88,000	170,000	200,000
Heavy water external to reactor - lb	35,640	117,820	270,025
Total heavy water in system - lb	123,640	287,820	470,025
Heavy water per kw - lb	6.18	2.88	1.88
Total cost heavy water in dollars @ $28/lb	3,462,000	8,059,000	13,160,000
Unit power cost @ .80 L.F. and 12%-mills/kwh	2.970	1.382	0.903
Cost of heavy water - $/kw	173	80	53
PRESSURIZED CASES			
Heavy water in reactor proper - lb	104,000	168,000	198,000
Heavy water external to reactor - lb	20,000	84,580	205,620
Total heavy water in system - lb	124,000	252,580	403,620
Heavy water per kw - lb	6.20	2.52	1.61
Total cost heavy water in dollars @ $28/lb	3,472,000	7,072,000	11,301,000
Unit power cost @ .80 L.F. and 12%-mills/kwh	2.979	1.213	0.775

TABLE VI

HEAVY WATER LOSSES

	20 EMW	100 EMW	250 EMW
BOILING CASES			
Loss of heavy water per year in dollars @ $28/lb	294,000	685,000	1,119,000
Unit cost of losses @ .80 L.F. - mills/kwh	2.100	0.979	0.639
Loss of heavy water - lb/day	35	81	130
PRESSURIZED CASES			
Loss of heavy water per year in dollars @ $28/lb	243,000	495,000	791,000
Unit cost of losses @ .80 L.F. - mills/kwh	1.736	0.707	0.452
Loss of heavy water - lb/day	29	59	94

extent were derived by a comparative method using these earlier U. S. reactor costs. Hence it is felt that the earlier estimates of Yankee, Dresden, and Calder Hall as given in the Euratom report are a fairer comparison with the heavy water reactor costs reported here. The Euratom report data, somewhat modified to conform to the ground rules shown in Table III, were thus employed, and it must therefore be recognized that all of the data discussed here for nuclear power costs may be low by 10 to 20%. (The Euratom authors wisely foresaw such uncertainties in estimated costs and added a flat 25% contingency to the values they calculated for mills/kwh.)

Table VII shows the economic comparison of the 100 EMW and 250 EMW heavy water designs with the Yankee, Dresden, and Calder Hall reactors. Because of differences in output and of the preparation of the cost estimates by various groups, it is difficult to say that the totals shown will permit clear-cut conclusions. The heavy water reactors in general appear capable of producing power in the same cost range as the slightly enriched light water and natural uranium Calder Hall types.

Effect of Modifying the Ground Rules

A number of assumptions were necessarily made in order to calculate the fuel-cycle costs and total power-generating costs presented above. Certain of these assumptions are quite dependent upon the future pattern of technological development and upon the economic setting in which a heavy water reactor might be constructed. It is the purpose of this section to discuss several possible changes in the ground rules used and to appraise the effects of these changes on the results presented.

The items to be examined are:

A. Modifications primarily affecting the fuel-cycle cost:
   1. A $30 credit per gram of plutonium rather than $12 per gram.
   2. An upper limit of 4,000 MWD/metric ton on exposure level because of radiation damage.
   3. The use of continuous charge-discharge of fuel elements.
   4. The effect of lower fabrication costs for zirconium elements.
   5. The use of uranium oxide rather than uranium metal.
   6. The use of stainless steel instead of zirconium cladding.

TABLE VII

U. S. POWER COSTS FROM VARIOUS REACTOR TYPES

(100 to 250 EMW Size)

	Yankee	Dresden	Calder Hall Type	D_2O Boiling		D_2O Pressurized	
Net Power Output (MW)	134	180	150	100	250	100	250
Plant Cost ($MM)	39.2	45.0	- *	30.6	61.7	37.4	75.5
$/kw	342	250	450*	306	247	374	302
Power Cost (mills/kwh)							
Capital charge (15%) **	7.3	5.3	9.6	6.5	5.3	8.0	6.4
Net fuel-cycle cost ***	3.7	4.0	1.8	2.3	2.6	2.3	2.3
Operating and maintenance	1.0	1.0	1.0	1.2	1.0	1.2	1.0
D_2O Losses	-	-	-	0.8	0.6	0.7	0.4
D_2O Inventory	-	-	-	1.4	0.9	1.2	0.8
Total	12.0	10.3	12.4	12.2	10.4	13.4	10.9

* In the Euratom report, it appears that the construction cost for the Calder Hall reactor type was based upon British cost levels, while the costs for Yankee and Dresden were based upon the considerably higher construction cost levels in the U. S. This would be an inconsistent comparison. From previous Size-Up studies and from detailed design work for a U. S.-constructed Calder Hall type carried out by Atomics International (see NAA-SR-1833 and NAA-SR-1955), a Calder Hall type reactor station in the 150 MW size range would cost $450 to $500/kw on a consistent U. S. construction-cost basis instead of the $400/kw used by Euratom.

** This charge can be read from Fig. 1 at the assumed plant factor of 80%.

*** The fuel inventory charge is included here but is calculated on the U. S. basis of 4%/year instead of the 8% assumed by Euratom. Carrying charges for non-nuclear inventory are also included.

B. Modifications affecting the total power-generating cost:

1. Different charge rates for capital plant, inventory, etc.
2. Higher permissible heat fluxes.

Use of a $30/gm Plutonium Credit

The AEC has offered to pay $30 per gram or higher for plutonium sold to it before July, 1963, but suggests that after that date the buying price might fall gradually to the fuel value, generally assumed to be nearer $12/gm. The effect of a higher plutonium credit is to cut the fuel-cycle cost/kwh roughly in half and to lessen the advantages of enrichment, since the per-kilogram fuel-cycle cost is reduced and therefore longer exposure levels are not so important in achieving a low fuel-cycle cost. These changes are illustrated by tabulating costs for the 13-B-8 pressurized cores shown in Table II for one-batch loading:

	With $12/gm Pu Credit			With $30/gm Pu Credit		
Enrichment (% U-235)	Pu Credit ($/kgm U)	Total Cost ($/kgm U)	Fuel Cycle Cost (Mills/kwh)	Pu Credit ($/kgm U)	Total Cost ($/kgm U)	Fuel Cycle Cost (Mills/kwh)
0.71	39.6	123.1	3.34	99.0	63.7	1.73
0.8	43.7	135.8	2.90	109.2	70.3	1.50
0.9	49.1	150.7	2.62	122.7	77.1	1.34
1.0	52.4	167.0	2.49	131.0	88.4	1.32
1.1	55.9	184.6	2.38	139.8	100.7	1.30
1.3	60.9	223.1	2.34	152.3	131.7	1.38

It will be noted that the optimum enrichment falls from above 1.3% to 1.1% when the plutonium credit is increased.

A Radiation-Damage Limit to Exposure

The discussion so far has assumed exposure levels of 9,000 MWD/metric ton and above are attainable with uranium metal fuel elements. This is the assumption employed in the D_2O reactor designs described by Argonne National Laboratory.[4] Particularly in the near future, however, the frequency of fuel-element failure may be too high at these long exposure levels because of radiation damage. Hence the effect of an upper limit on the feasible exposure level should be examined.

If the maximum exposure level is limited by radiation damage, then obviously for a given fuel element type, lattice spacing, and core diameter, only sufficient enrichment to reach the limiting exposure level can economically be utilized. For a radiation-damage limit of (say) 4,000 MWD/metric ton, an examination of Tables I and II indicates that natural uranium would be optimum over a wide range of core designs. At this lower exposure level, the fuel-cycle cost would rise from slightly more than 2 mills to somewhat over 3 mills/kwh.

It will also be noted that the advantage of continuous charge-discharge loading would be lost if radiation damage prevented utilization of the reactivity gains thereby made possible.

The prospect of such a radiation-damage limit occurring is more likely with uranium metal fuel elements than with uranium oxide elements. There is thus more assurance of economic usefulness of enriched uranium with oxide cores than with metal cores for this reason and also because the reactivity of natural uranium oxide cores is somewhat worse than for metal cores.

Continuous Charge-Discharge Loading

The advantage of continuous charge-discharge loading is that it extends the reactivity lifetime of the fuel. Because of the hyperbolic shape of the curve of fuel-cycle cost as a function of exposure level (see Figure 2), this reactivity extension is of substantial benefit to the natural and slightly enriched uranium cores. From Tables I and II it may be seen that even with natural uranium, exposure levels of over 10,000 MWD/metric ton may be obtained by continuous charge-discharge, and the resulting fuel-cycle costs are only 1.0 to 1.5 mills. Under the ground rules employed, however, even with continuous charge-discharge the use of enrichment will permit a still further reduction in fuel-cycle costs if radiation damage does not limit exposure.

Comparing similar core designs, it appears that continuous charge-discharge will allow a sufficiently longer reactivity lifetime to reduce the fuel-cycle cost by 1.2 to 1.5 mills per kilowatt hour for exposure levels above 5,000 MWD/metric ton. Using a capital charge of 15% and an 80% plant factor, from Figure 1 this saving in fuel-cycle cost is the equivalent of about $60 per kilowatt in capital cost, or $6 million in a 100 EMW plant. Hence, if the continuous charge-discharge planned by the Chalk River group cost no more than an additional $6 million, it will be worthwhile.*

* In Canada, the capital charge used is less than 15%, and an even greater capital-cost premium than $6 million would still look attractive.

Lower Fuel Fabrication Costs

The fabrication costs used in Project Size-Up for metal plate elements clad with zirconium are:

Element A	$57/kgm U
Element B	$75/kgm U

These costs are unattainable now but might be achieved after perhaps five years. Beyond that, lower costs are possible and are postulated in many studies even for oxide fuel elements, which today are more expensive than the metal type.

Lower fuel fabrication costs result in a relatively heavier weighting of the burn-up cost in fuel cycle economics and hence favor the lower enrichments. Thus for the core design 13-A-9 in Table II, it can be calculated that if the fuel fabrication cost were $38/kgm, instead of $57/kgm, the natural uranium would have as low a fuel-cycle cost as the enriched uranium (both costs being equal to about 1.79 mills/kwh).

It is perhaps appropriate at this point to compare the results obtained in Project Size-Up with the Canadian work on pressurized D_2O reactors. As discussed in Appendix E, the Canadians assume the following:

1) Low conversion costs and zirconium fabrication costs. - A total of $30/kgm for all chemical conversion, shipping, and fuel-fabrication costs (exclusive of inventory charges) is assumed by the Canadians. In Project Size-Up, these costs (at least for the near term) are estimated to be upwards of $75/kgm. The Canadian assumption weights the argument in favor of natural uranium, as has just been discussed.

2) Continuous charge-discharge. - Because of the long exposure levels believed attainable by this loading method, natural uranium is again favored.

3) Low $/kw capital cost and low capital charge, pressurized tube design. - All three of these factors minimize the importance of the pressure-vessel cost and hence make large cores and large lattice spacings less expensive. Again this permits increased exposure level and favors natural uranium.

Using the ground rules and assumptions employed by the Canadians, the results of this Size-Up report would corroborate their conclusion that natural uranium is a very economic fuel. However, it is felt that certain of these assumptions will not be realizable for a number of years, and that during a

considerable interim period there are decided advantages to enriched uranium in D_2O reactors, not the least of which are the smaller cores, tighter lattice spacings, and extended heat transfer surface in fuel elements which can thus be employed.

Another result of the Canadian set of ground rules is that their calculated power costs will be considerably lower than those calculated in this and other U. S. reports. The lower capital charge rate of 8.5%, for example, cuts the fixed charge for a given design almost in half.

Comparison with Oxide Elements

A comparison based on zirconium cladding can be made directly with two lattice configurations taken from a Canadian design study for the NPD reactor. The fuel element considered by the Canadians consists of pellets of uranium oxide (UO_2) contained in a zircaloy sheath 0.030 in. thick. Nineteen of these elements plus the D_2O coolant flowing in the spaces between elements are contained in a zircaloy coolant tube 0.040 in. thick. A 0.5-in. helium insulating gap separates this from an aluminum tube 0.025 in. thick. In the unit cell, the total cross section of the fuel is 25 sq cm, with 22.5 sq cm of coolant, 6.21 sq cm of zirconium element sheath, 2.688 sq cm of zirconium coolant tube, and 1.911 sq cm of aluminum tube. The radius of the element is 0.647 cm, the average heat flux is 125,000 Btu/hr-sq ft, and the power per lineal foot of assembly is 0.094 MW.

Case "10-1-1" has a lattice spacing (triangular array) of 7.32 in.; Case "10-1-2" has a lattice spacing of 7.92 in. The values used for M^2, f, p, and ϵ are those reported by the Canadians for their design study. η was changed to agree with the constants used in the present report (see Appendix D), and the change of M^2 with enrichment is small and was approximated. Equilibrium xenon and samarium were included as in all other calculations. The core diameter necessary for 100 EMW of power was calculated based on the above heat flux.

The exposure attainable was estimated by assuming the losses in buckling with exposure for each enrichment to be the same as those of the Element B, 8-in. lattice spacing, pressurized. The depleted uranium concentration appropriate to the corresponding enrichment case at this same exposure level

for Element B, 8-in. lattice spacing was used. The plutonium credit was adjusted slightly by the ratio of the infinite reactor initial conversion ratios.

$$\text{I.C.R.} = \frac{N_{28}}{N_{25}} \frac{\sigma_{28}}{\sigma_{25}} + \eta_{25} \epsilon(1-p)$$

This ratio describes the plutonium production relative to U-235 fission at the start of exposure.

The values calculated for k_∞, buckling, and initial conversion ratio are as follows:

	Wt % U-235	k_∞	β^2	I.C.R.
Case 10-1-1	0.71	1.0836	309.3 10^6 cm^{-2}	0.8748
	0.8	1.1301	481.4	0.8121
	1.0	1.2138	791.3	0.7118
	1.3	1.3036	1167.7	0.6192
Case 10-1-2	0.71	1.1113	389.3	0.8213
	0.8	1.1594	557.4	0.7587
	1.0	1.2459	860.1	0.6584
	1.3	1.3388	1303.1	0.5657
Element B,	0.71	1.1077	502.8	0.8612
8-in.	0.8	1.1546	734.6	0.7986
Pressurized	1.0	1.2392	1175.0	0.6983
	1.3	1.3295	1681.0	0.6056

For purposes of calculating the fuel element fabrication cost (here taken as including UF_6 to finished element) for the oxide elements, the prescription contained in the summary of Appendix C was employed. For these elements, 20.8% zirconium by weight, a fuel element fabrication cost of \$58.2/lb of uranium was estimated. Converting to oxide the schedule in Table C-III, the corresponding fuel conversion plus fabrication costs become \$156/kgm uranium for natural metal and \$156.6/kgm uranium for enriched metal.

The costs appropriate to the 100 EMW pressurized case are as follows (total costs are not shown for the continuous charge-discharge case, since there are no estimates available of the additional capital cost needed to permit this type of fuel scheduling):

57

	One-Batch Loading			Continuous Charge-Discharge	
Wt % U-235	Maximum Exposure Level MWD/Metric Ton	Fuel-Cycle Cost Mills/kwh	Total Cost Mills/kwh	Maximum Exposure Level MWD/Metric Ton	Fuel-Cycle Cost Mills/kwh
Case 10-1-1. Core diameter and height, 11.5 ft. Fixed costs (mills/kwh): Capital charge, 8.44; D_2O inventory, 1.76; D_2O loss, 1.07. Operating and maintenance, 1.2.					
0.71	2895	8.92	21.39	5460	3.80
0.8	4145	6.56	19.03	8030	3.48
1.0	6070	5.02	17.49	12350	2.62
1.3	8246	3.90	16.37	Extremely high	
Case 10-1-2. Core diameter and height, 12.0 ft. Fixed costs (mills/kwh): Capital charge, 8.55; D_2O inventory, 1.89; D_2O loss, 1.14. Operating and maintenance, 1.2.					
0.71	3990	6.6	19.38	7640	3.47
0.8	5010	5.54	18.32	9940	2.91
1.0	6850	4.53	17.31	13820	2.40
1.3	9472	3.56	16.34	Extremely high	
Element B. 7-in. lattice spacing, 9-ft core diameter and height. Fixed costs (mills/kwh): Capital charge, 8.01; D_2O inventory, 1.21; D_2O loss, 0.71. Operating and maintenance, 1.2.					
0.71	Subcritical			Subcritical	
0.8	3120	5.46	16.59	5510	3.22
0.9	5130	3.58	14.71	16050	1.84
1.0	6900	2.87	14.00	Extremely high	
1.1	8540	2.52	13.65	Extremely high	
1.3	11520	2.18	13.31	Extremely high	

The preceding results indicate for the batch loading, comparing on the basis of equivalent exposure, that the fuel-cycle costs will be about 1.0 to 1.5 mills/kwh higher for the oxide than the metal case chosen. This difference is reducible to less than 1 mill/kwh for the continuous charge-discharge case. Also, due to the reduction in specific power (MW/cu ft of core) the D_2O costs and the pressure vessel costs are increased for the oxide cases.

Extrapolating the results slightly, this comparison, based on these specific fuel elements, indicates that oxide elements must be exposed for more than 15,000 MWD/ton to reach the same range of power costs as for the metal plate elements exposed to 5,000 MWD/ton.

It should be borne in mind that the oxide cases considered may not be an "optimized" design.

Use of Stainless Steel Elements

As described in Appendix C, estimates were made of the cost of fabricating uranium oxide fuel elements using stainless steel rather than zirconium as a cladding. An estimate of $53/kgm was made for the PWR-type element which will be used in the Yankee reactor,* and $31/kgm for the stainless steel counterpart of the Dresden zirconium element.

To determine whether stainless steel might be a more economic material than zirconium, reactor physics calculations were carried out assuming stainless steel instead of zirconium in the 11-ft diameter boiling core, 8-in. lattice spacing.

Costs were based upon rod-type oxide elements clad with either zirconium or stainless steel of the same thickness used in the Canadian study. It was assumed that relative reactivity effects for this type of element could be satisfactorily approximated by performing further physics calculations for flat plate metal elements, with the atom ratio of cladding metal to uranium taken as equivalent to the cladding thickness of the Canadian design for oxide elements.

The fabrication cost for the zirconium element was $128/kgm, giving a total of $156.6/kgm of fuel for processing plus fabrication cost. For stainless steel, based on the oxide element comparison, a fabrication cost of one-fifth of this, or $25.6/kgm, was assumed.

The enrichments, exposure levels, and fuel-cycle costs are shown in the table below. Stainless steel is significantly cheaper, even at high exposure levels, on the basis of the fabrication costs for zirconium and stainless steel elements used here.

Zirconium Element			Stainless Steel Element		
Enrichment	Exposure	Mills/kwh	Enrichment	Exposure	Mills/kwh
		One-Batch Loading			
0.71	3240	7.38	2.0	6748	2.85
0.8	5030	5.15	2.25	10537	2.42
0.9	6700	4.10	2.5	14163	2.25
1.0	8270	3.55			
1.1	9750	3.22			
1.3	12700	2.83			
		Continuous Charge-Discharge			
0.71	5870	4.19	2.0	13138	2.02
0.8	9930	2.58	2.25	20285	1.78
0.9	13700	2.03			

* In the Euratom report, PWR stainless steel elements were estimated at $60/kgm.

TABLE VIII

EFFECT OF MODIFYING THE ECONOMIC GROUND RULES

	Yankee	Dresden	Calder Hall Type	D_2O Boiling		D_2O Pressurized	
Net Power Output (MW)	134	180	150	100	250	100	250
$/kw	342	250	450	306	247	374	302
Mills/kwh: *							
Base Case Costs (Table VII)	12.0	10.3	12.4	12.2	10.4	13.4	10.9
Base Case Modified by:							
1) Renting D_2O (at 4%/$-yr)	12.0	10.3	12.4	11.3	9.8	12.6	10.4
2) Capital charge 13%, charges for fuel, D_2O, and non-nuclear core parts at 8% (Euratom basis)	11.5	9.8	11.5	10.8	9.4	11.9	9.7
3) Capital charge 9%, charges for fuel, D_2O, and non-nuclear core parts at 5% (approximate U.K. basis)	9.0	8.0	8.7	8.7	7.7	9.4	7.7

* As noted previously, no charge for interest on construction is included here. Strictly speaking, this should be added in, but it has little effect on differences between reactor types.

Different Charge Rates for Capital Plant, Inventory, Etc.

The economic comparisons given so far in this report were based on ground rules applying to the U. S. private utility industry, assuming that heavy water would be purchased at $28/lb, with the appropriate carrying charge of 12% per dollar-year levied against the total cost of the heavy water needed.

There are other possible ground rules which might well apply in situations where the construction of heavy water power reactors would be of interest. For example, if plants were entirely government-financed, the annual charges for depreciating and non-depreciating investment would be considerably lower.*

The total power generating costs for the reactor types included in Table VII can easily be converted to other ground rules. Table VIII shows the effect on the total power cost as a result of modifications in the economic assumptions:

1) Rental of D_2O. The rental of D_2O from the AEC at 4%/dollar-year rather than its purchase and payment of a 12%/dollar-year annual carrying charge would reduce the D_2O inventory charge by two-thirds. Such a reduction represents 0.5 to 0.9 mills/kwh in the D_2O reactor cases shown.

2) Use of Euratom Basis. The Euratom report on nuclear reactors used a somewhat lower capital charge and an 8% annual carrying charge for fuel. The Calder Hall reactor and the D_2O reactors show the greatest cost reduction with this set of ground rules compared with the base case, chiefly because of the lower capital charge and lower D_2O charge, respectively.

3) Use of United Kingdom Basis. In computing the cost of power from reactors of the Calder Hall type, the United Kingdom group employed quite low annual charges. As can be seen from Table VIII, such a basis is particularly helpful to the Calder Hall economics because of the large capital cost of this reactor.**

Higher Permissible Heat Fluxes

An important reason for the difference between the low nuclear power costs calculated in long-range forecasts (such as those published in the AEC-sponsored

---

* For a discussion of the various charges involved in reactor economics, see Section V of an earlier Project Size-Up study, "Comparison of Calder Hall and PWR Reactor Types," AECU-3398, March, 1957.

** The Calder Hall plant type constructed in Britain would probably cost only about two-thirds as much as shown in Table VII for U. S. construction. Hence in Britain on the U. K. basis, the power cost would be in the range of 7 to 8 mills/kwh as concluded in the previous Project Size-Up report on the Calder Hall reactor.

study "Project Dynamo") and the considerably higher costs predicted today is the optimism assumed for heat fluxes. The average flux value of 120,000 Btu/hr-sq ft used in this present study appears low, yet today's reactor designers are unwilling to go higher until operating experience is obtained.

If a higher permissible heat flux were employed, the core size for a given output could be made smaller or a "clumped" fuel element could be used, giving lower fuel fabrication costs and longer reactivity lifetimes.

As an example, if the permissible heat flux of the 100 EMW boiling design were doubled to a value of 240,000 Btu/hr-sq ft, the Type A element could be used with a 7-in. lattice spacing and an 11-ft diameter vessel (rather than the 13-ft diameter vessel shown for this combination in Table III). It should thus be possible to obtain roughly 10,000 MWD/metric ton with 1.3 or 1.4% enrichment and a fuel-cycle cost of about 2 mills/kwh instead of the 2.34 mills/kwh shown in Table IV. The saving in pressure vessel cost, shielding, etc., would be $600,000 or 0.12 mills in addition. Thus the total saving would be in the order of 0.5 mills out of 12 mills/kwh.

Somewhat larger savings will occur if the higher heat flux assumption is employed to raise the total power output rather than to reduce the size of the pressure vessel. As discussed in Appendix B, doubling the heat output of the 250 EMW boiling design could, along with other economies, permit a cost reduction of perhaps 2 or 3 mills/kwh.

IV APPENDICES

APPENDIX A

HEAT TRANSFER

Introduction

On the larger sizes of power reactors, the rate at which heat can be removed from the core is frequently the limiting design factor. The purpose of this section is to discuss the factors which limit the rate of heat removal in boiling and pressurized reactor systems and to describe the manner in which the six reactor designs were obtained.

Heat transfer at the high fluxes necessary in power reactors is presently not entirely understood, and rather anomalous results have been obtained in many of the heat transfer studies made on such factors as burn-out heat flux. Because of the uncertainties of neutron flux distribution, hot channel factors, safety factors required for possible loss of coolant flow, etc., design practice is to choose a conservatively low value for average heat flux. This practice is followed in the designs included in this report.

Boiling Heavy Water Reactors

For this study only steady-state heat transfer conditions were analyzed; consequently, the limits imposed by transient (time dependent) variations must be allowed for by appropriate factors of safety which may be determined by comparison with existing reactors and/or specific experiments.

The factors which limit the steady-state power output of the boiling heavy water reactors can be considered in four categories:

1) Transition from nucleate to firm boiling, causing burn-out
2) Excessive void fraction
3) Excessive material temperature
4) Two-phase flow instability

64

1. Burn-Out Heat Flux

The accurate prediction of the value of the heat flux which corresponds to the transition from nucleate to firm boiling - the "so-called "burn-out" condition - is not yet possible. Since burn-out can impose the upper limit on the rate of heat removal from any given core, its quantitative prediction has been studied extensively.

The mechanisms involved in this phenomenon are apparently quite complicated and depend on elusive surface characteristics of the heat transfer area as well as the usual heat transfer rate parameters. As a result, no theoretical relationships have been found which adequately describe the performance of experimental systems, and the empirical relationships which describe the experimental data from one apparatus are rarely applicable to another.

This situation leads to extremely conservative designs for reactor systems, because the value of the heat fluxes which are deemed allowable are chosen at or below the lowest value predicted by any of these empirical relationships. This is the policy which was pursued for the current boiling reactor designs. The following empirical correlation was employed, which was based upon a thorough examination of the existing data:[1]

$$\frac{q''_{perm}}{10^6} = 11\ P^{-.21} \left(\frac{G}{10^6}\right)^{.5} \left(\frac{L}{D}\right)^{-.38}$$

where

q''_{perm}	= permissible heat flux Btu/hr-sq ft
G	= mass flow velocity, lb/hr-sq ft
P	= absolute pressure, lb/sq in.
L	= boiling length of channel, ft
D	= equivalent diameter of channel, ft

This correlation is intended to apply only to cases where the exit steam quality* is less than 15% and for values of G greater than 0.6×10^6 lb/hr-sq ft.

---

[1] Kaiser Engineers Nuclear Power Study, "Preliminary Design of a Boiling Heavy Water Reactor," TID 5301, November 29, 1953 (Confidential)

* "Quality" in boiling water reactor cores is used here to refer to the ratio of mass flow rates of vapor and liquid at any particular point.

Below about 40% quality the data of Lowdermilk and Weiland[2] show no effect of quality on the burn-out heat flux However, data from the Argonne National Laboratory[3] suggest 15% as a conservative upper limit. For high values of steam quality insufficient liquid is in contact with the hot metal surfaces to remove the heat at the maximum possible rate.

Since the equation suggested by the Kaiser study predicts zero permissible heat flux at zero mass flow velocity, it ceases to be applicable at low flow rates, and the value of burn-out heat flux associated with pool boiling becomes limiting. McAdams[4] shows data on the relationship between heat flux in pool boiling and temperature difference for various system pressures. The burn-out value of heat flux is shown to increase with increasing pressure, reach a maximum at about 1500 lb/sq in., and then decrease with further increase in pressure.

These maximum (burn-out) values of heat flux range between about 400,000 Btu/hr-sq ft at atmospheric pressure and 1,500,000 Btu/hr-sq ft at 1500 lb/sq in. and represent the upper limit to the heat flux in non-flow systems. With increased flow rate, the burn-out heat flux should increase from the static value, but the increase would not be great, since turbulence caused by the steam bubbles alone is very great compared to the additional contribution associated with convective flow.

It may be observed that the maximum permissible values of heat flux as predicted by the Kaiser correlation are substantially below the pool boiling burn-out values given by McAdams. If the pool boiling data are realistic, the other values are conservative by a considerable factor. The conservative values, however, are quite consistent with the values used in the designs of the existing or currently envisaged boiling reactors as shown in Table A-I.

---

2 W. Lowdermilk and W. F. Weiland, "Some Measurements of Boiling Burn-Out," NACA RM-E54K10.

3 S. McLain, "Reactor Engineering Lectures," ANL-5424.

4 W. H. McAdams, "Heat Transmission," Third Edition, McGraw Hill, 1954, Fig. 14-14, p. 382.

TABLE A-I

BOILING REACTOR HEAT FLUX VALUES*

Reactor	Heat Flux Average	Heat Flux Maximum
	Btu / hr-sq ft-°F	Btu / hr-sq ft-°F
Borax II	37,000	92,500
Borax III	68,000	170,000
Experimental Boiling Water Reactor	44,000	110,000
Dresden Nuclear Power Station	120,000	300,000

Note: Underlined values were tabulated; the other values are based on an assumed maximum to average flux ratio of 2.5.

* "Nuclear Reactor Data 2," Raytheon Manufacturing Company.

2. Excessive Void Fraction

Reduced heat transfer performance due to liquid "starvation" of the heat transfer surface accompanies excessive void fraction or steam quality. This condition is similar to the burn-out phenomeron in which the hot surface is suddenly covered by a blanket of steam which acts as a very large resistance to the flow of heat. The starvation condition itself is much less serious than burn-out, because its effect appears gradually as the local quality increases. If not arrested by reducing power or increasing coolant flow rate, however, it can lead to the serious burn-out condition at values of heat flux less than anticipated on the basis of lower quality.

In addition, it has been observed that certain nuclear instabilities occur when the void fraction of the moderator exceeds some limit depending on operating conditions. These nuclear instabilities create problems in the control of light water reactors which can be mitigated satisfactorily by restricting the maximum allowable void fraction to approximately 20% for operating pressures in the vicinity of 600 lb/sq in.

3. Material Temperature

The various reactor core components are subject to many environmental strains, mechanical and thermal stresses, deterioration by corrosion, and deformations due to phase transitions. Either the condition itself or the capacity of the material components to resist the effect, or both, is sensitive to the temperature level and/or the temperature gradients within the core. An analysis was performed for this study to determine the maximum temperature of each material of which the fuel elements are fabricated. These calculated temperatures may be compared with maximum allowable temperatures for each material to determine the conditions under which the heat transfer performance will be limited due to excessive material temperatures.

For uranium metal fuel elements, the temperature dependent transition from its alpha to its beta phase imposes a limitation, because an associated volume change leads to warpage and possibly rupture of the element. This transition occurs at approximately 1224°F.

To eliminate this temperature limitation and to prevent damage from the uranium-water reaction in the event of a cladding rupture, uranium oxide fuel is often substituted. No outstanding gain in heat transfer rate is

associated, however, because the thermal conductivity of the oxide is very much lower than the metal, and a correspondingly greater temperature difference is required for the same heat flux at the wall.

Zirconium cladding is subject to corrosive attack by water above about 620°F. This limitation will not affect boiling reactors operating below about 1500 lb/sq in., because the saturation temperature is 596°F at this pressure, and the temperature difference between the metal wall and the saturated liquid corresponding to the burn-out heat flux is only about 20°F.

Other material limitations, particularly those associated with thermal and flow transients, possibly can impose additional restrictions on the reactor performance, but the reliability of their analytical prediction is not great, and none are included here.

4. Two-Phase Flow Instability

A peculiar relationship between pressure drop and mass flow velocity in two-phase flow systems has been observed.[5] The peculiarity stems from the variation of pressure drop with mass flow rate. As total mass flow rate through a given boiling system is increased from zero, the pressure drop passes through a maximum, followed by a minimum, and then the normally expected increase as the square of the velocity. With this characteristic, through a finite range of flow rate, more than one value of mass flow rate is possible for a given pressure drop.

Interpreted in connection with the parallel reactor coolant passages, which are connected to the same headers top and bottom and consequently all operate with the same pressure drop, a situation is possible whereby substantially different flow rates can occur in the passages, and the possibility of oscillations from one flowing state to the other is particularly disturbing from the point of view of reactor control. Further, there is a possibility of burn-out failure if, in a channel designed to operate at one flow rate, a substantially diminished flow occurs, with a proportionally increased void fraction.

---

5 D. H. Weiss, "Pressure Drop in Two-Phase Flow", ANL 4916, October 20, 1952

Boiling Core Design Configurations

Several assumptions regarding the systems and the mathematical relationships which describe the flow of heat and fluid within these systems were made to facilitate the heat transfer design:

1) The cores are assumed to be right circular cylinders, each consisting of a bundle of parallel fuel elements, in length equal to the core height, and arranged so that their longitudinal axis is vertical. Heavy water coolant flows upward through each element, and additional heavy water, as moderator, fills the spaces between the elements
2) The geometrical relationships for the three boiling cores, as well as the pressurized ones, are presumed fixed and are presented in Table IV of Section III.
3) The rate of heat generation is assumed to be described by the J_o Bessel function radially and by the cosine function longitudinally. These functions are restricted to zero values at radii and half height values equal respectively to the actual core radii and half heights plus the reflector savings. It is believed that the control rods and other flattening devices would in practice make the distribution of heat more uniform. These assumptions are, hence, conservative.
4) Thermal and hydrodynamic entrance lengths are neglected, and steady-state heat and fluid flow rates are assumed.
5) The ratio of the steam velocity to the liquid velocity in the boiling coolant channels is assumed to be constant and equal to 2.0. Actually this "slip" ratio is a function of mass flow rate through the channel, position in the channel, pressure, and possibly other parameters, but these relationships are not sufficiently well known to warrant their incorporation into the analysis. The data of Lottes and Flinn[6] indicate that the value of the slip ratio varies between 1 and 3 for conditions similar to those imposed for this study.

---

6 P. A. Lottes and W. S. Flinn, "A Method of Analysis of Natural Circulation Boiling Systems," Argonne National Laboratory, March, 1956.

6) The individual coolant flow channels are orificed such that the flow through each channel is directly proportional to the heat produced by that element. This implies that the ratio of the heat production by an element to the coolant mass flow rate through the element is constant; consequently, the steam quality distribution with height is the same for all channels.

7) The coolant inlet temperature is assumed to be 10°F below the saturation temperature in each core. Some such difference is required to prevent cavitation in the recirculation pumps, but the numerical value chosen is purely arbitrary.

8) The coolant recirculation rate is maintained at a value giving an average coolant density of 0.66 gm/cc in the shroud. (This is a rather arbitrary assumption, being that used in a heavy water design presented by Argonne National Laboratory.[7]

Based on these assumptions, the liquid recirculation rates required for the three boiling reference reactors are shown in Table IV of Section III. Because of the low pressure drop through the reactor, the required pumping power for recirculation is fairly small, and, as noted previously, the effects of a xenon transient during shutdown might be partially overcome by increasing the recirculation rate to raise the average coolant density and thereby gain reactivity.

Pressurized Cases

Heat Exchanger Design

As has been described, the core design for each of the six reference reactors was selected on the basis of a limiting average heat flux of 120,000 Btu/hr-sq ft. The possible combinations of lattice spacing, core diameter, and fuel element type that could comply with this restriction were then examined and a combination selected which seemed most appropriate from the standpoint of fuel-cycle cost and a reasonably small vessel diameter.

The coolant flow rate could then be chosen on the basis of an economic balance between pumping power and heat exchanger surface and the following additional limitations:

---

[7] H. P. Iskenderian, et al, "Heavy Water Reactors," Geneva Conference Paper, P/495, 1955.

1) Since a pressure of over roughly 1800 psi in the reactor vessel resulted in increases in vessel cost without commensurate savings due to higher thermal efficiencies, this value was selected as the operating pressure. The water outlet temperature from the reactor was then set at 535°F, giving a safety factor of 90°F between this water temperature and the saturation temperature corresponding to 1800 psi.
2) The maximum allowable zirconium surface temperature was set at 620°F in order to avoid excessive corrosion. (As noted later, this did not turn out to be a critical restriction because of the high recirculation rates employed to reduce the heat exchanger cost and because of the conservative value employed for the average heat flux in the core.)

To simplify the calculations, it was assumed that the feedwater heaters raised the feedwater to 350°F before it entered the steam generator, since this appeared to be a reasonable choice over a wide range of operating conditions.[8] As a considerably simplified and conservative procedure, it can be assumed that the preheater-boiler duty of the steam generator can be treated as a single unit with the surface temperature on the steam side uniformly at saturation temperature plus a constant temperature increment dependent on the steam pressure as follows:

Steam Pressure (psia)	Temperature Increment (ΔT) (°F)
400	29
600	25
1000	20

With this simplification, the usual log-mean temperature difference equation simplifies to:

$$\frac{T_2 - T_1}{T_2 - (T_1 + \Delta T)} = 1 - e^{-\frac{UA}{wC}}$$

---

[8] J. V. Salisbury, "Steam Turbines and Their Cycles," , p. 302, J. Wiley, 1950

where (T_2-T_1) = temperature drop of primary coolant = $(535-T_1)$

T_L = steam temperature

w = primary coolant flow rate

C = specific heat of primary coolant

U = over-all heat transfer coefficient (assumed to be constant at 300 Btu/hr-sq ft-°F *)

A = heat transfer surface required

The flow rate, w, should be selected so as to minimize the total of investment charges and operating costs for the circulating pumps and heat exchangers.

Studies indicated that at reasonable values of core pressure drop there was a definite "knee" in the curve of heat transfer area needed versus the flow rate, w Since increase of the flow rate up to the knee effected significant savings in heat exchanger costs, while further increase of the flow rate beyond the knee had little effect on the heat exchanger, the flow rate at the knee was selected provisionally as optimum for the various reference reactor designs. These flow rates are shown on Figure 17

Core Hydrodynamics and Heat Transfer

The primary coolant flow rate as selected above was then evaluated for its influence on the heat transfer and hydrodynamics in the core and to check whether the value of core pressure drop assumed above was in fact a sufficiently close estimate

The possible limiting factors for heat transfer in pressurized water reactors are:

1) Material Temperature - The material temperature limitations for pressurized water reactors are essentially the same as those imposed in boiling water systems.

2) Pressure Drop - The pressure difference across the reactor core induces mechanical stresses in the structural parts which generally are proportional to the pressure drop Appropriate designs are required to insure an adequate structural configuration to withstand these stresses; inasmuch as the magnitude of these design problems increases with loading, ultimately a point

---

* Private communication from Ross Heat Exchanger Division

is reached beyond which this non-uniform pressure loading will limit the coolant flow rate; hence the power output.

3) Pumping Power - The power required to circulate the coolant through the core, heat exchanger, and external piping is proportional to both the pressure drop and the coolant flow rate. This power level is limited to a fraction of the total power delivered by the reactor; the exact limiting fraction is imposed by economic considerations.

4) Erosion and Corrosion - Since high velocity coolant flowing past a solid surface can remove fragments of the metal by an erosion or abrasion mechanism as well as by chemical attack, it may be necessary to limit the maximum velocity; hence the maximum rate of heat removal. The magnitude of such a limitation would be imposed by the results of experimental tests involving rather specific configurations and no attempt to estimate this limit has been made for this study.

The following values have been reported for heat fluxes in pressurized water reactors:[9]

Reactor		Average Heat Flux (Btu/hr-sq ft)
PWR *	Seed	112,000
	Blanket	65,000
Yankee		100,000
Belgian Thermal Reactor		95,500
Consolidated Edison		169,000
Canadian D_2O NPD Reactor		~100,000

The idealizations on which the core calculations were based are quite similar to the boiling reactor analyses; there are a few exceptions:

1) As with the boiling cores, the pressurized cores are assumed to be right circular cylinders, each consisting of a bundle of parallel fuel elements, in length equal to the core height and arranged so that their longitudinal axis is vertical. Heavy water coolant flows upward through each

---

9 Raytheon Corporation, "Nuclear Reactor Data," Vol 2.

* These PWR heat fluxes are based on the minimum design output of 60,000 electrical kilowatts. It is expected that in actual operation they can be exceeded by at least 50%.

element and additional heavy water, as moderator, fills the spaces between the elements.

2) The geometrical relationships are presumed fixed.

3) Heat generation distribution is the same as for the boiling reactors. The rate of heat generation is assumed to be described by the J_0 Bessel function radially and by the cosine function longitudinally These functions are restricted to zero values at radii and half height values equal respectively to the actual core radii and half heights plus the reflector savings.

4) Thermal and hydrodynamic entrance lengths are neglected, and steady-state heat and fluid flow rates are assumed.

5) The individual coolant flow channels are orificed such that the flow through each channel is directly proportional to the heat produced by that element. This implies that the ratio of the heat production by an element to the coolant mass flow rate through the element is constant.

6) The average heat flux was limited to 120,000 Btu/hr-sq ft.

7) The maximum wall temperature was not allowed to exceed 620°F, which is about the maximum temperature at which zirconium can safely be used. Actually, at an average heat flux of 120,000 Btu/hr-sq ft, the primary coolant rate used was relatively large to minimize the heat exchanger cost, and hence the wall temperature in the critical channel was always below 620°F in all designs. The uranium metal center temperature was also well below the metal transition temperature.

8) The outlet coolant temperature was also presumed constant at 535°F, so as to give a 90°F safety factor below the bulk saturation temperature corresponding to the reactor vessel pressure of 1800 psi.

APPENDIX B 15

MECHANICAL FEATURES AND DETAILED COST ESTIMATES

In selecting the size and type of equipment for nuclear power plants, a certain amount of optimization is usually employed, especially in connection with the selection of the best steam cycle. This generally takes the form of balancing increased construction costs due to more efficient (e.g., higher pressure) equipment against savings in fuel resulting from the use thereof.

In the case of a nuclear plant the selection of the best plant cycle for a given size and type of power plant has always presented a difficult problem for the obvious reason that the two controlling factors, namely, anticipated fuel costs and construction costs, are not sufficiently well known to permit a precise analysis. Not until a sufficient number of these plants have been built and operated will we be able to predict an optimum design with a high degree of reliability. A reasonable approximation may be made, however, and this was done in this report, as outlined below.

The best conventional American plants are now showing a fuel cost of about 3 mills/kwh. If nuclear power plants are to compete, they must do considerably better than this because of the inherently higher construction costs of the latter. A number of recent studies have indicated that for nuclear plants presently contemplated a fuel cost of 2 mills/kwh is reasonable to expect within the lifetime of the plant. With the over-all thermal efficiencies expected of about 30%, this corresponds to a marginal steam cost of about $0 20 per million Btu. It may be stated that nuclear construction costs show a rapid increase with increases in design pressure, and, since the possible fuel savings are relatively small as the pressure is raised, it appears that the tendency toward less efficient steam cycles for nuclear plants will continue for some time to come.

Before going into the actual optimization of the cycles, selection of equipment, and freezing of plant designs, it should be mentioned that both the dual cycle and the closed boiling cycle were considered and eliminated as constituting a separate problem for study. The use of superheated steam was eliminated as not offering any contribution toward the know-how of a heavy water nuclear power plant at this time. The selection of the best cycle then resolved itself to determination of steam turbine throttle pressure, condenser vacuum, and extent to which regenerative feedwater heating is to be employed.

The major pieces of equipment which go to make up the principal cost of a nuclear plant, the cost of which varies not only with size but with the plant cycle to be selected, are:

1) Main condenser
2) Feedwater heaters
3) Main heat exchanger (steam generator) - pressurized case
4) Reactor pressure vessel
5) Containment vessel
6) Turbo-generator
7) Reactor feed pumps and recirculating pumps
8) Interconnecting piping

Design Philosophy

As indicated previously in this report, the use of a heavy water reactor for power purposes introduces two design problems arising from the high cost of the heavy water. These are (1) maintenance of low heavy water inventory and (2) reduction of leakage As pointed out above, the cost of heavy water has been reduced considerably from what it was just a few years ago, and consequently expensive designs to maintain low inventory and reduce leakage are no longer justified In fact, investigation has indicated that the extremes resorted to on some of the earlier studies were actually prompted as much by the scarcity as by the cost of heavy water. For this reason designs and specifications were confined to conventional types and materials as much as possible, this being consistent with the spirit of the study which is to confine ourselves as much as possible to known technology

Following the general practice in nuclear plants now being built or contemplated, stainless steel is used where there is contact with hot water and carbon steel where the contact is primarily with steam. Monel tubes are used on high-temperature feedwater heaters, while copper nickel is used on the lower temperature units Other materials are discussed in connection with the individual pieces of equipment

No canned rotor pumps are used, it being the philosophy to rely on mechanical seals and to recover slight leakage through an enclosed drainage system Rather than pay a high premium for special designs to prevent leakage, such as double tube heat exchangers, suitable instrumentation and alarms are provided which is reflected in slightly higher instrument costs.

Such other special features which are provided are discussed under the specific pieces of equipment which follow.

Main Condenser

Wide variations in plant operating conditions make a painstaking optimization of condenser design of doubtful value This is especially true in a nuclear plant where the tendency toward providing condensers of smaller area because of lower anticipated fuel costs, and hence less need for high vacuum, is counteracted by the need for additional surface to take care of "dumping" steam during periods of load interruption. For this reason it was decided to standardize condenser back-pressures at 1.5-in. Hg. This corresponds to the preferred standards of the Joint AIEE-ASME Committee on Steam Turbine-Generators for large turbo-generators, as used in the design specifications of most modern conventional plants, and represents average operating conditions in most plants of the United States.

Using an average inlet circulating temperature of 65°F and average heat transfer coefficient of 570 Btu/hr-sq ft/°F representing a cleanliness factor of 85%, the condenser surfaces were designed for full throttle flow at the rated capacities studied herein The elimination of one of the variables in the cycle is thus effected.

Conventional materials were used for tubes and tube sheets, but in the case of the boiling cycle, consistent with what is considered best practice at present, a double tube sheet with leak-off detection was provided to prevent contamination of D_2O with H_2O

Feedwater Heaters

In a nuclear plant the advantages of feedwater heating are not analogous to those prevailing in a conventional plant, since it is desirable to get the most heat possible out of the reactor using a low reactor coolant inlet temperature Even in nuclear plants, however, the economy of regenerative feedwater heating is so great that its use seems imperative This is in addition to the fact that turbine extraction openings and piping must be provided for moisture removal in any case Calculations were made to verify these facts and to help determine to what extent feedwater heating should be carried out in the plants being studied

The curves on Figures B-2 and B-3 show how fuel and fixed charges vary with the number of feedwater heaters for both the boiling and pressurized cases for various pressures in a 100 EMW plant. The curves on Figures B-4 and B-5 show the corresponding total power cost in mills/kwh based on a fuel-cycle cost of $0.20/million Btu. Attention is invited to the points at which the curves level off rapidly, indicating relatively small savings through the use of additional heaters. This appears to be four heaters for the boiling case and six heaters for the pressurized case. The difference is due to the slightly better station heat rate obtained with the boiling plant because of the smaller amount of auxiliary power required.

The difference, however, is comparatively small and probably beyond the limits of accuracy of a study such as this. For this reason, we have adopted four heaters for both the boiling and pressurized cases.

Although the figures were worked out for the 100 EMW plant only, it is felt that the results apply with acceptable accuracy for the 20 EMW and 250 EMW cases also, since for low-pressure plants the turbine heat rates do not vary a great deal with size in this range. This has been verified by data supplied by manufacturers for several previous studies.

Main Heat Exchangers (Steam Generators)

The pressurized D_2O cores entail the use of an expensive piece of additional equipment, namely, the main heat exchanger or steam generator. The design of this exchanger was presented to two of the leading manufacturers of this type of equipment. The cost data which they developed utilizing their experiences with the Shippingport and Dresden projects for the several cases checked rather closely and formed the basis of the figures for this item shown in the estimated construction costs The heat transfer area required was calculated as explained in Appendix A.

Reactor Pressure Vessel

The general dimensions of the vessels required for different capacities and types, based on our determination of core sizes, were transmitted to Consolidated Western Steel, who produced the designs and costs given in their report incorporating the provisions for leak tightness (Appendix F).

Based on these, data curves of pressure vessel costs versus diameter for various pressures were plotted (Figure B-6).

For the higher pressures and larger diameters the curves shown on Figure B-7 were plotted.

The effect of the pressure vessel cost on the final unit power cost is shown on Figure B-8. It is obvious that this will be more marked in the case of smaller plants where it may go as high as 1 8 mills/kwh. In the larger plants, the effect is less noticeable, the maximum shown being less than 0.5 mills/kwh. It would appear, therefore, that in most cases the effect of pressure vessel cost on final unit power cost is not as vital as is sometimes supposed.

Containment Vessel

The required volumes of containment vessel were established by computing the volume of steam produced by converting the normal contents of the reactor and adjacent piping at the operating temperatures and pressures to steam at 30 psig and allowing 20% additional for machinery and equipment Using these volumes, Consolidated Western produced the designs and costs given in their report and shown in the cost tabulations, Tables B-II and B-III

Turbo-Generator

In the case of the pressurized cycle, the turbo-generator presents the usual problem connected with use of saturated steam and moisture removal This is reflected in higher costs for these units, especially in the larger sizes With the boiling cycle the problem of prevention of leakage becomes of even greater importance when heavy water is used The manufacturers agree that a virtually leak-proof machine may be built utilizing a special shaft seal similar to that shown on the accompanying sketch, Figure B-1, and further enclosing the casing in a welded metal shell or "can" similar to that employed on mercury vapor turbines This increases the cost from 2% to 10%, depending on the size, and this is provided for in the estimates

Pumps

These were mentioned in the general discussion above The capacities and heads required being already established by the previous work, prices were obtained for basically standard pumps, the only special provisions being in the mechanical seals, the extra costs of which showed up in our estimates

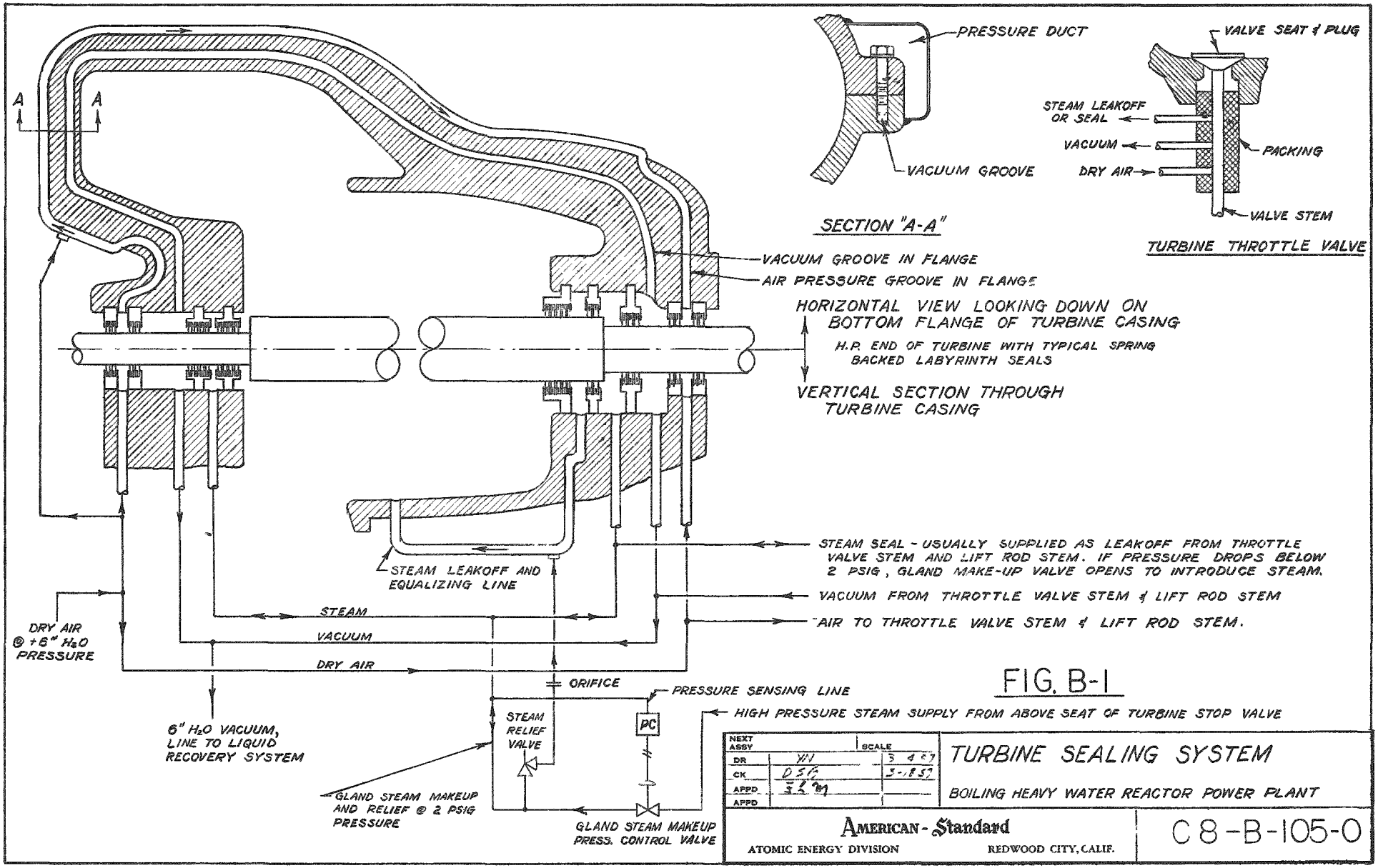
PRESSURE DUCT
VACUUM GROOVE
SECTION "A-A"
VALVE SEAT & PLUG
STEAM LEAKOFF OR SEAL
VACUUM
DRY AIR
PACKING
VALVE STEM
TURBINE THROTTLE VALVE
A
A
VACUUM GROOVE IN FLANGE
AIR PRESSURE GROOVE IN FLANGE
HORIZONTAL VIEW LOOKING DOWN ON BOTTOM FLANGE OF TURBINE CASING
H.P. END OF TURBINE WITH TYPICAL SPRING BACKED LABYRINTH SEALS
VERTICAL SECTION THROUGH TURBINE CASING
STEAM SEAL - USUALLY SUPPLIED AS LEAKOFF FROM THROTTLE VALVE STEM AND LIFT ROD STEM. IF PRESSURE DROPS BELOW 2 PSIG, GLAND MAKE-UP VALVE OPENS TO INTRODUCE STEAM.
VACUUM FROM THROTTLE VALVE STEM & LIFT ROD STEM
AIR TO THROTTLE VALVE STEM & LIFT ROD STEM.
STEAM LEAKOFF AND EQUALIZING LINE
STEAM
VACUUM
DRY AIR
DRY AIR @ +6" H2O PRESSURE
ORIFICE
PRESSURE SENSING LINE
HIGH PRESSURE STEAM SUPPLY FROM ABOVE SEAT OF TURBINE STOP VALVE
PC
STEAM RELIEF VALVE
6" H2O VACUUM, LINE TO LIQUID RECOVERY SYSTEM
GLAND STEAM MAKEUP AND RELIEF @ 2 PSIG PRESSURE
GLAND STEAM MAKEUP PRESS. CONTROL VALVE
NEXT ASSY
SCALE
DR
CK
APPD
APPD
TURBINE SEALING SYSTEM
BOILING HEAVY WATER REACTOR POWER PLANT
AMERICAN-Standard
ATOMIC ENERGY DIVISION
REDWOOD CITY, CALIF.
C8-B-105-0

FIG. B-1

81

Figure B-2

100 EMW
Boiling Heavy Water Reactor Power Plant

Fuel Cost (at $0.20 per Million BTU)
Feedwater Heaters Installed Cost } As a Function of Number of Feedwater Heaters

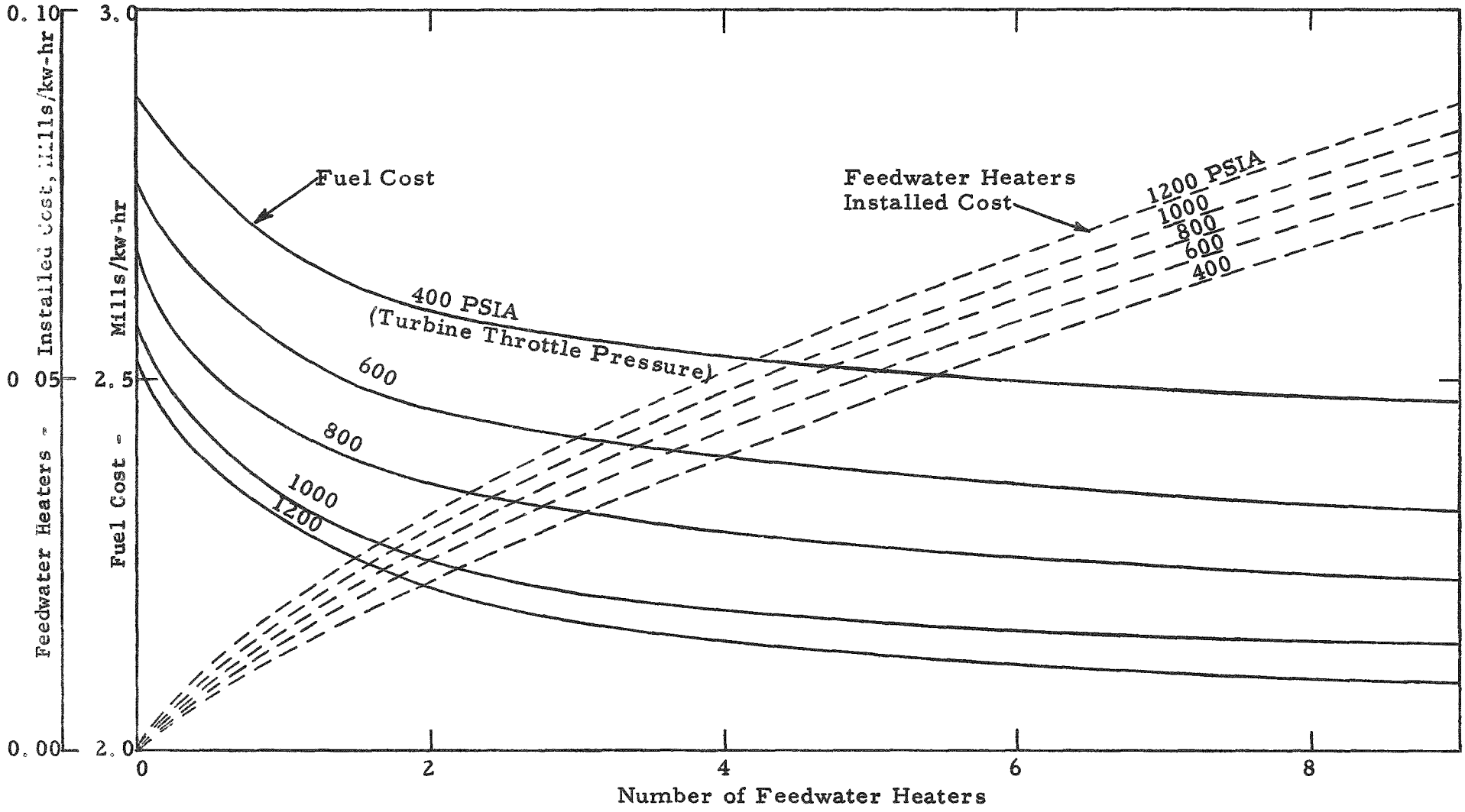

82

Figure B-3

100 EMW
Pressurized Heavy Water Reactor Power Plant

Fuel Cost (at $0.20 per Million BTU)
Feedwater Heaters Installed Cost } As a Function of Number of Feedwater Heaters

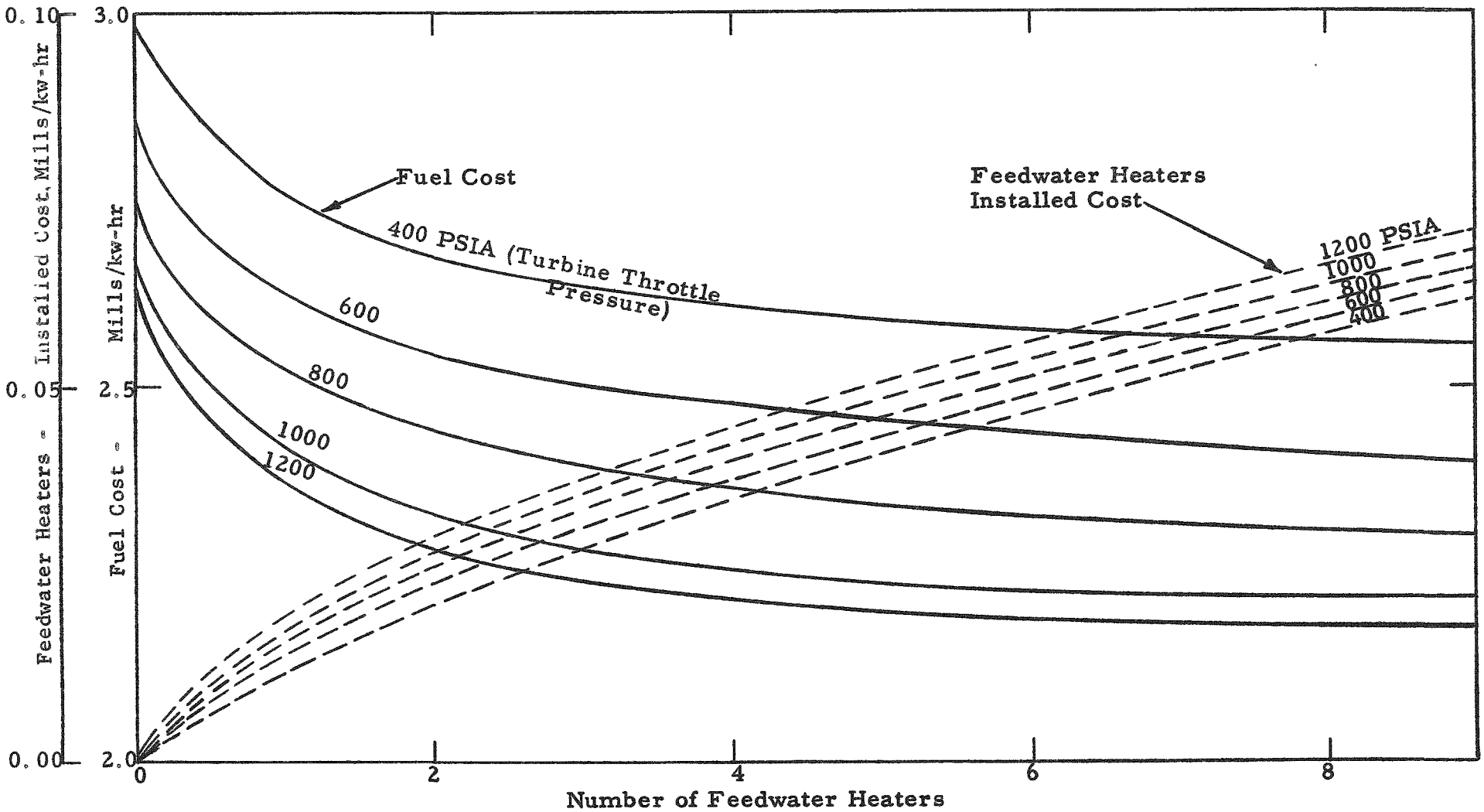

83

Figure B-4

100 EMW
Boiling Heavy Water Reactor Power Plant

Optimum Number of Feedwater Heaters in Relation to the Combined Effect of Fuel Cost (at $0 20 per Million BTU) and Feedwater Heaters Installed Cost

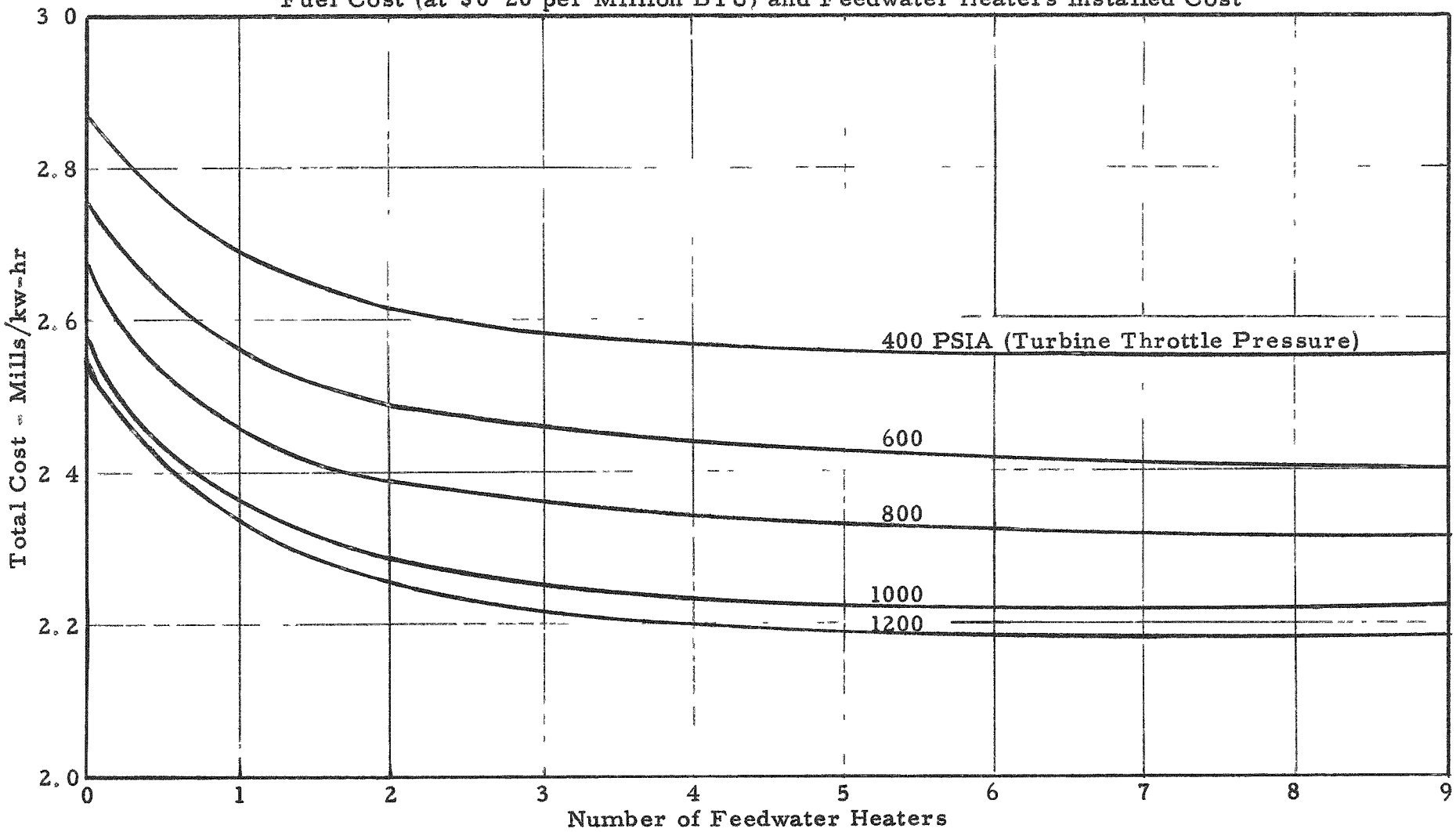

Figure B-5

100 EMW
Pressurized Heavy Water Reactor Power Plant

Optimum Number of Feedwater Heaters in Relation to the Combined Effect of Fuel Cost (at $0.20 per Million BTU) and Feedwater Heaters Installed Cost

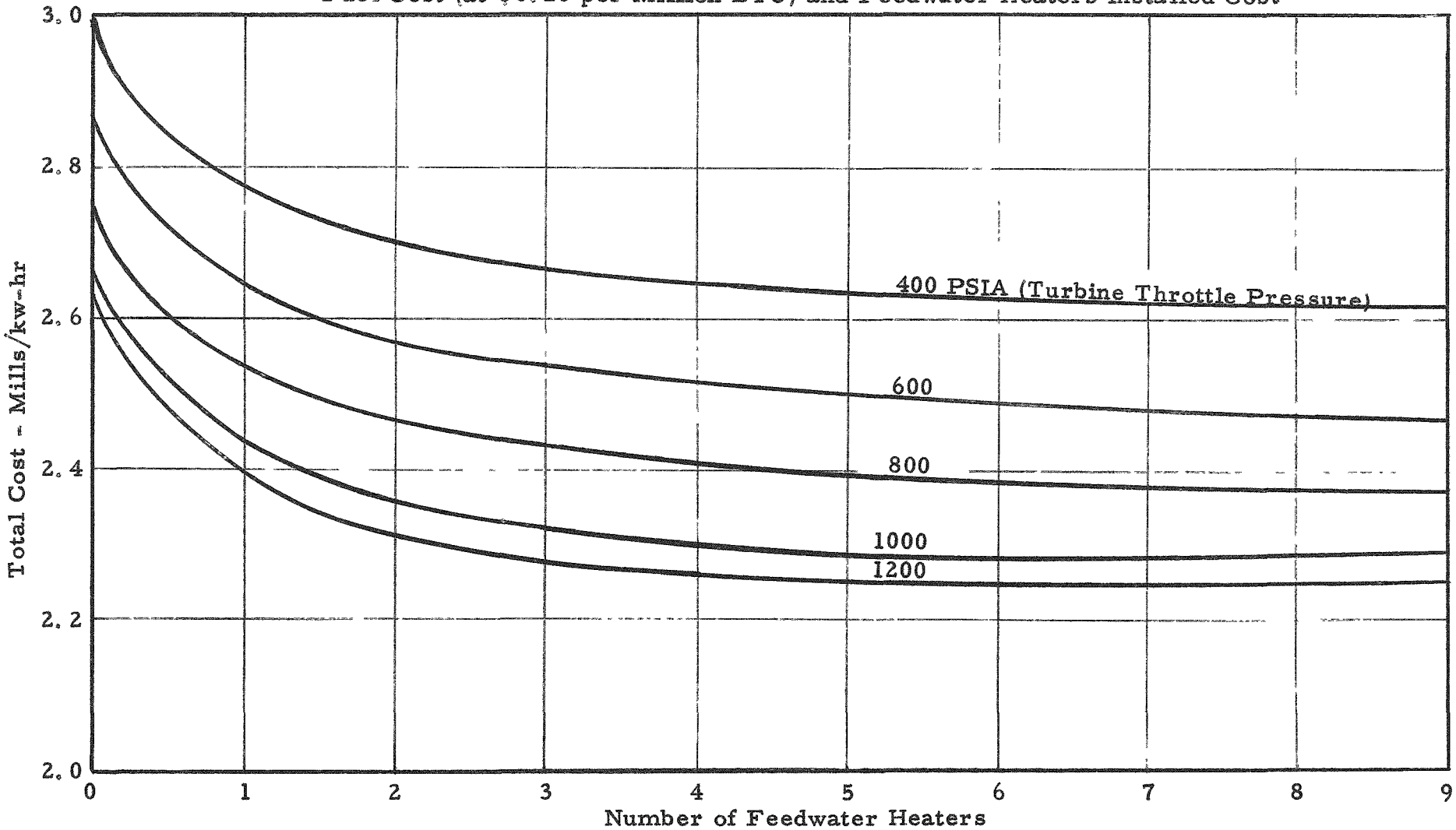

85

Figure B-6

Pressure Vessel Costs, D_2O Reactors

Stainless Clad Code Vessels Based on Study by Consolidated-Western
Cost of Bare Vessel

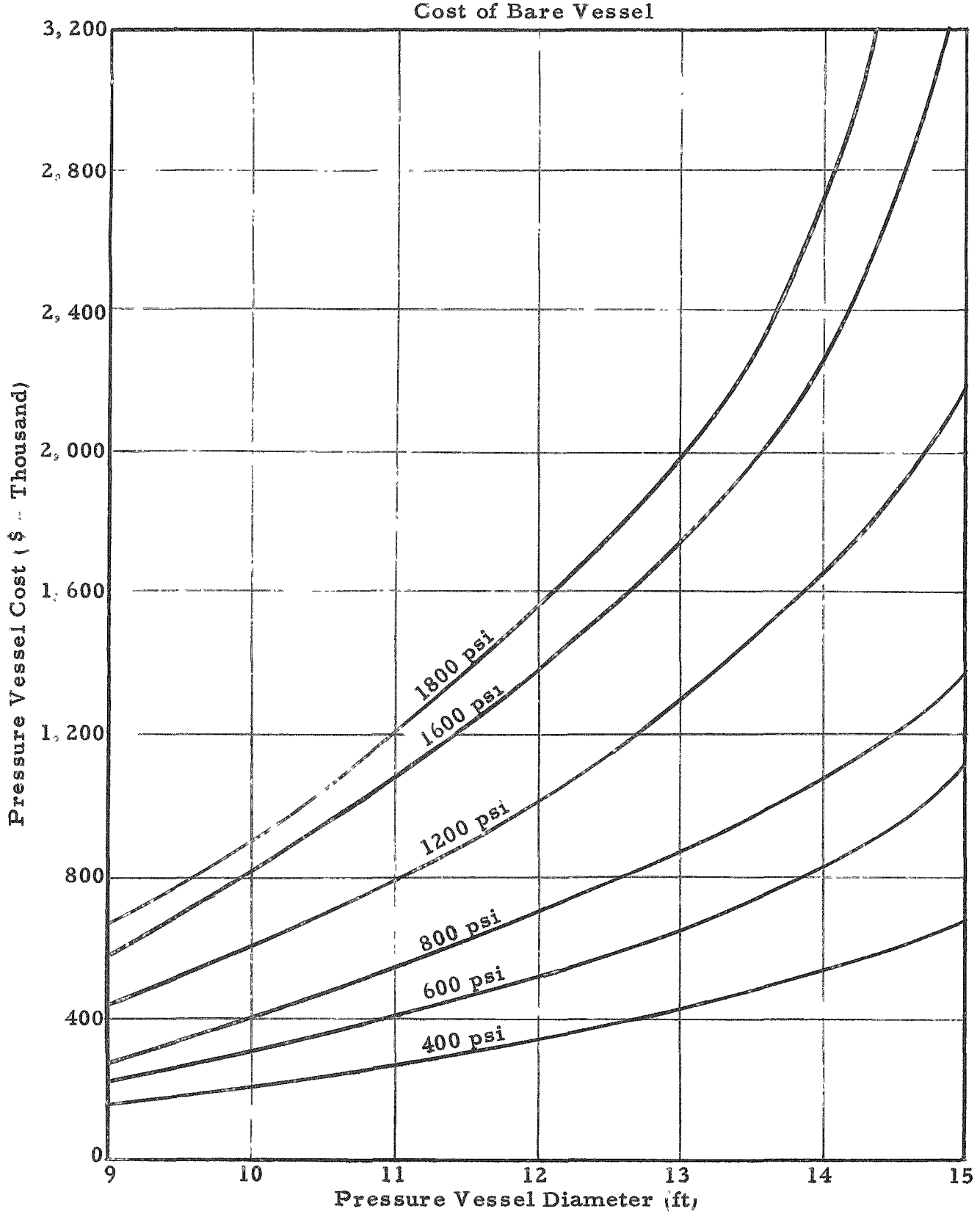

Figure B-7

Larger Vessel Costs, Pressurized D_2O Cases

Stainless Clad Code Vessels Based on Study by Consolidated-Western

Cost of Bare Vessel

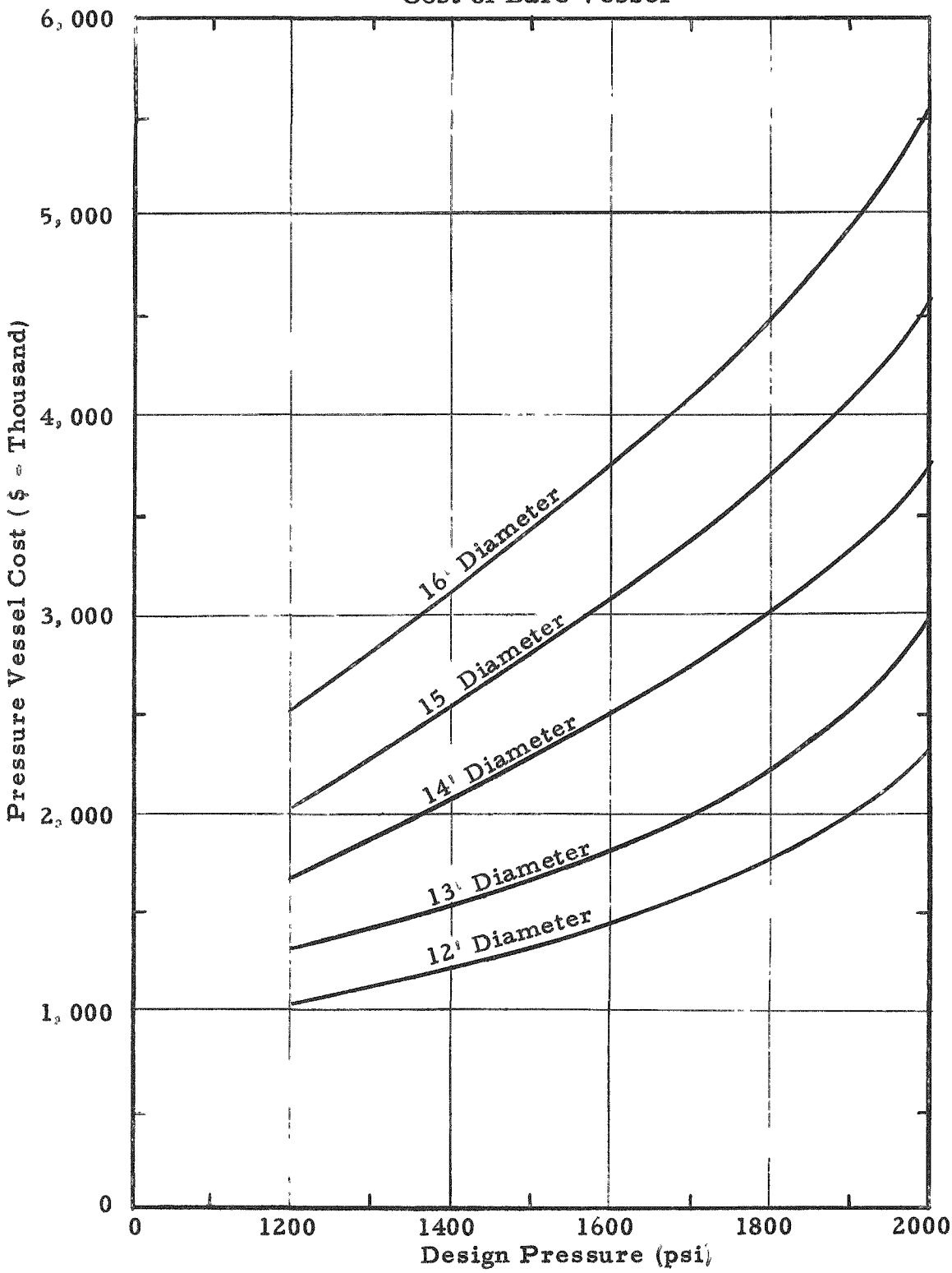

27

Figure B-8

Effect of PV Cost on Unit Power Costs

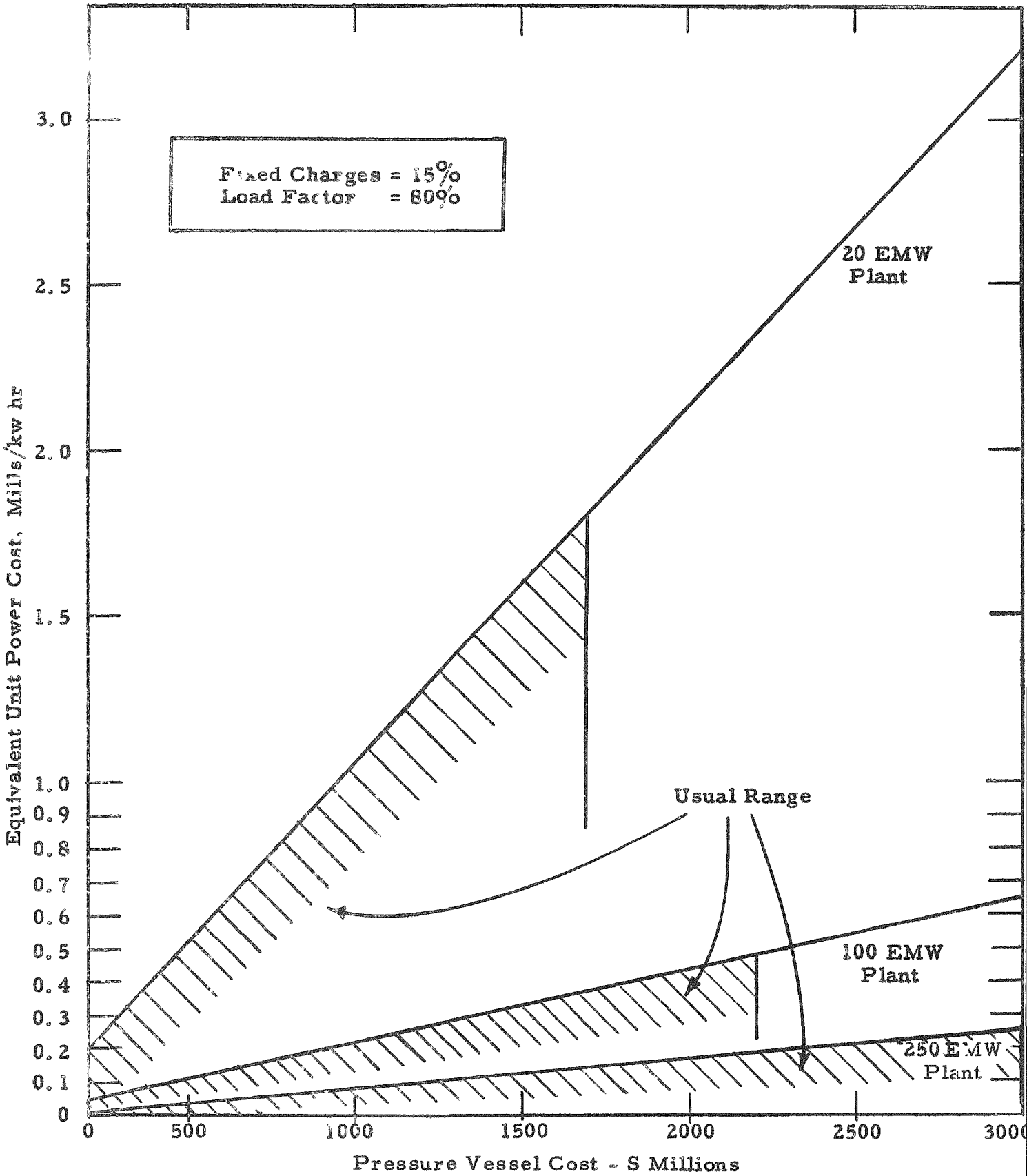

Heat Rates, Steam Cycle, and Cost Estimates

The net station heat rates and efficiencies were calculated for each pressure, using four feedwater heaters and the condenser conditions previously established The efficiencies are shown at the head of the appropriate columns of Table B-I

It is seen that the efficiencies average about 30% and improve about 1% for each of the incremental pressure increases shown Using the fuel cost of 2 mills/kwh established previously, it follows that savings in fuel cost for each pressure increase amount to $2 \times \frac{1}{30} = .066$ mills/kwh.

At the base of the columns of Table B-I are seen the unit fixed costs for construction in mills/kwh for each of the pressures given It is obvious that even in the most favorable cases, namely, the large size boiling plants, the increased cost of going to the next higher pressure amounts to 0.1 mill. In the less favorable pressurized cases this amounts to several mills. In no case is it less than the saving in fuel cost which is realized.

The obvious conclusion is, therefore, that it does not pay to go to the higher steam pressures for heavy water plants of the type currently contemplated. This may not necessarily be true a few years from now when unit construction costs may decrease more rapidly than fuel costs because of improved technology and experience

Detailed construction cost estimates for the boiling heavy water plants as fixed by the foregoing analysis are shown in Table B-III.

Design for 500 EMW

At the later request of AEC an approximation of unit power costs in a heavy water plant having a capacity of 500 EMW was made The latter size was selected, since several of the larger utilities have indicated that they will be going to this size turbo-generator by 1962.

Obviously, construction cost data for plants utilizing units of this size is much less reliable than that given previously in this report. For this reason a detailed cost estimate was not made, but the following method was used (See Table B-IV)

A boiling heavy water plant utilizing a throttle pressure of 800 psi saturated was adopted It was assumed that by the above date the conservative average heat flux of 120,000 Btu/hr-sq ft could be doubled as operating

TABLE B-I

EFFECT OF TURBINE THROTTLE PRESSURE ON CONSTRUCTION COSTS

	20 EMW			100 EMW				250 EMW			
Turbine Throttle Pressure	400	600	800	400	600	800	1,000	400	600	800	1,000
Cycle Efficiency %	29	30	31	29	30	31	32	29	30	31	32
				Boiling Cases							
Total Construction Costs $ x 10^6	10.8	11.5	12.1	30.6	31.4	32.5	33.5	61.7	62.9	64.1	65.9
Construction Costs $/kw	540	575	605	306	314	325	335	247	251	256	264
Unit Costs Mills/kwh	11.65	12.3	13	6.56	6.73	6.96	7.17	5.28	5.38	5.50	5.65
				Pressurized Cases							
Total Construction Costs $ x 10^6	13.9	14.8	17.1	37.4	40.4	49.6	-	75.5	80.5	105.0	-
Construction Costs $/kw	695	740	855	374	404	496	-	302	322	420	-
Unit Costs Mills/kwh	14.89	15.8	18.3	8.01	8.68	10.6	-	6.49	6.92	9.02	-

TABLE B-II

BOILING HEAVY WATER REACTOR POWER PLANTS

DETAILED CONSTRUCTION COSTS

$1000

Rated Electrical Capacity EMW	20	100	250
Turbine Throttle Pressure PSIA	400	400	400
(310) Land	40	200	500
(311) Structures & Improvements	800	3,500	7,500
(312) Reactor Plant			
Reactor Vessel	528	690	777
Reactor Shielding	250	500	1,000
Reactor Core & Fittings	320	1,200	2,000
Fuel Handling Equipment	770	820	900
Control Rod Drives	264	393	550
Recirculation Pumps	126	378	1,062
Interconnecting Piping	322	535	1,190
Instrumentation & Controls	378	839	1,080
D_2O Treatment & Recovery System	60	255	624
Steam Separator	50	87	163
Containment Vessel	386	590	724
Sub-Total	3,454	6,287	10,070
(314) Turbo-generator Equipment			
Turbo-generator, incl. auxiliaries	1,366	5,134	11,410
Condenser, incl. circulation pumps	196	945	2,140
Condensate Pumps	23	42	73
Feedwater Heaters	41	185	435
Feedwater Pumps	58	104	182
Interconnecting Piping	188	600	1,760
Instrumentation & Controls	222	961	2,134
Sub-Total	2,094	7,971	18,134
(315) Accessory Electrical Equipment	450	1,300	2,500
(316) Miscellaneous Plant Equipment	137	395	808
Sub-Total (A)	6,975	19,653	39,512
Engineering @ 20%	1,395	3,920	7,900
Overhead @ 10%	698	1,965	3,950
Sub-Total (B)	9,068	25,538	51,362
Contingency @ 20%	1,814	5,110	10,300
Total Construction Cost	10,882	30,648	61,662
Total Unit Construction Cost			
$/kw	544	306	247
Mills/kwh	11.655	6.56	5 28

TABLE B-III

PRESSURIZED HEAVY WATER REACTOR POWER PLANTS

DETAILED CONSTRUCTION COSTS

$1000

Rated Electrical Capacity EMW	20	100	250
Reactor Operating Pressure PSIA	1800	1800	1800
Turbine Throttle Pressure PSIA	400	400	400
(310) Land	40	200	500
(311) Structures & Improvements	800	3,500	7,500
(312) Reactor Plant			
Reactor Vessel	1,435	2,596	5,000
Reactor Shielding	300	550	1,200
Reactor Core & Fittings	300	1,000	1,900
Fuel Handling Equipment	770	820	900
Control Rod Drives	264	360	500
Pressurizer & Recombiner	32	48	52
Heat Exchangers (Steam Generators)	340	1,440	3,560
Recirculation Pumps	192	576	1,483
Containment Vessel	640	1,037	1,139
Instrumentation & Controls	475	1,120	1,837
Interconnecting Piping	622	1,074	2,320
D_2O Treatment & Recovery System	40	164	395
Sub-Total	5,410	10,785	20,286
(314) Turbo-generator Equipment			
Turbo-generator, incl auxiliaries	1,253	4,710	10,440
Condenser, incl. circulation pumps	207	931	2,080
Condensate pumps	23	42	73
Feedwater Heaters	34	158	390
Feedwater Pump	58	104	182
Instrumentation & Controls	175	780	1,763
Interconnecting Piping	228	746	2,230
H_2O Make-up System	11	35	75
Sub-Total	1,989	7,506	17,233
(315) Accessory Electrical Equipment	500	1,500	2,800
(316) Miscellaneous Plant Equipment	175	470	919
Sub-Total (A)	8,914	23,961	49,238
Engineering @ 20%	1,783	4,792	9,376
Overhead @ 10%	891	2,396	4,688
Sub-Total (B)	11,588	31,149	60,942
Contingency @ 20%	2,318	6,230	12,188
Total Construction Cost	13,906	37,379	75,490
Total Construction Cost $/kw	695	374	299
Mills/kwh	14 893	8 010	6 43

TABLE B-IV

APPROXIMATION OF A 500 EMW BOILING D_2O PLANT

$1000

Land (Same as for 250 EMW)	500
Structures & Improvements (Same as for 250 EMW)	7,500
Sub-Total (A)	8,000
Reactor Plant	
Reactor Proper & Accessories (Same as for 250 EMW)	5,785
Remainder of Reactor (Cost at 250 EMW x $2^{0.6}$)	9,000
Sub-Total (B)	14,785
Turbo-generator Plant	
Turbo-generator & auxiliaries	21,000
Condenser	4,000
Remainder of Turbo-generator Plant (Cost at 250 EMW x $2^{0.6}$)	8,000
Sub-Total (C)	33,000
Accessory Electrical Equipment	4,120
Miscellaneous Plant Equipment	1,340
Sub-Total (D)	61,245
Engineering @ 20% & Overhead @ 10%	79,569
Contingency @ 20%	16,000
TOTAL	95,569

UNIT COST $190/KW

experience was gained, that is, that 500 EMW could be obtained from the same reactor now providing 250 EMW. Hence the reactor and directly related costs were left the same.

Approximate turbine and condenser prices for the 500 EMW size were obtained from manufacturers.

The cost for land and improvements were left the same as for the 250 EMW plant.

The cost of the remaining equipment was raised by a factor of $2^{0.6}$ in accordance with customary practice in process plant estimating.

Using these figures and applying the same factors for engineering overhead and contingency, a figure of $95 million was estimated for such a plant, or $190/kw.

The heavy water inventory was obtained by assuming the same quantity in the reactor as was done for the 250 EMW case and increasing the amount outside the reactor by the same factor, namely, $2^{0.6}$. The result was a heavy water cost of $30/kw.

Heavy water losses were approximated in the manner indicated above, giving a loss of 150 lb per day or a unit power cost of about 0.5 mills.

From Figure 18 a unit construction cost of 4 mills/kwh was obtained for construction costs and 0.5 mills/kwh for heavy water inventory. Adding 1 mill/kwh for maintenance and operation, a unit cost of 6 mills/kwh results. Assuming further that a 1.5 mill fuel cost will be attainable at this time, a total unit power cost of 7.5 mills/kwh is obtained.

It is conceded that the above figures are very approximate, but they are of some value in indicating that nuclear power, using a heavy water boiling reactor, should come close to being competitive with conventional power, if such large reactors can be developed and operated feasibly in utility networks.

<u>Equipment Manufacturers Consulted</u>

Pressure Vessels	-	Consolidated Western Steel Division, U. S. Steel Corporation
Pumps	-	Worthington Corporation Byron Jackson Company Ingersoll-Rand Company

Heat Exchangers -	The Babcock and Wilcox Company Foster Wheeler Corporation
Turbo-generators -	Allis-Chalmers Manufacturing Company General Electric Company Westinghouse Electric Corporation

APPENDIX C

COSTS OF FUEL CYCLE STEPS

The unit costs of converting uranium from one chemical form to another and of recovering uranium or plutonium from irradiated fuel are quite dependent upon:

1) the uranium enrichment
2) the batch size to be treated
3) the performance of the operation in a Government-operated plant as opposed to a privately-operated plant
4) the time period being considered (as the atomic power industry grows, most unit costs are expected to fall markedly)

Information on the effect of these variables is not complete. The available data are discussed below.

For normal or slightly enriched uranium (perhaps up to 3% U-235), unit costs are appreciably lower than for more concentrated material, since in general the criticality problem is not encountered. Power reactors utilizing slightly enriched uranium contain in the range of 10,000 to 70,000 kilograms of this material. It will be assumed that batch sizes processed in the fuel cycle are sufficiently large so that the costs described are appropriate to batches of several tons or more.

Purchase or Lease of Uranium Fuel

Under the present regulations, the AEC will sell or lease natural uranium to a reactor operator at a price of $40.00 per kilogram in the metal ingot form only. A question of some interest in connection with heavy water reactors is whether the AEC might in the future also sell normal UO_2 directly. Large quantities of this material are now manufactured in AEC plants, since the conversion of natural UO_3 to UF_4 or UF_6 involves a preliminary reduction to the UO_2 stage. There seems no great technical problem which would prevent the withdrawal of UO_2 from the production process, although the particle size is somewhat smaller than for the UO_2 commonly used in oxide pellet production. Selling of normal UO_2 by the AEC would permit reactor operators to obtain this material at perhaps $38.00 per kilogram of U-content,

while normal UO_2 prepared in large batches by reduction of UF_6 would probably cost at least \$42.50 per kilogram U, or a cost differential of \$4.50.

The AEC has recently published[1] a price scale for enriched uranium in the form of UF_6 (see Table C-I) and has offered normal uranium as metal ingots at \$40.00/kgm. This price scale was used to determine the cost of fresh fuel, and it was assumed that this fuel was rented from the AEC at the established charge of 4% per dollar-year based on the published price scale. It was further assumed that the period required for all out-of-pile fuel cycle steps was one year. Although a similar price scale has not been published for depleted uranium, prices for such material can be calculated based upon the price scale equation which best fits the AEC prices for slightly enriched uranium. Benedict[2] has published such an equation:

$$C = 37.48 \left[(2x-1) \ln \frac{449x}{1-x} + 449 (x - 0.00222)\right]$$

where

C = \$/kgm of contained uranium

x = weight fraction U-235 in the uranium

Preparation of Enriched Oxide or Metal

Since enriched uranium is available only in the form of UF_6, the reactor operator must reduce the enriched UF_6 to metal or to UO_2 in order to prepare fuel elements.

$UF_6 \rightarrow UO_2$

This step involves:

1) hydrolysis of UF_6 to uranyl fluoride
2) precipitation of ammonium diuranate with ammonia
3) thermal decomposition to U_3O_8
4) reduction of U_3O_8 to UO_2 with hydrogen

For slightly enriched uranium in batch sizes of 3,000 kg and above, the unit cost picture as received from commercial firms for this fuel-cycle step is summarized below:

---

1 See Nucleonics, 14, No. 12, p. R2 (December, 1956).
2 M. Benedict and T. H. Pigford, Chem. Eng. Prog., 53, 145-M (March, 1957).

TABLE C-I

ENRICHED URANIUM PRICES[1]

Weight fraction U-235	Base Charge as UF_6, f.o.b. Oak Ridge ($/kg contained U)	($/gm U-235 content)
.0072	40.50	5.62
.0074	42.75	5.78
.0076	45.25	5.95
.0078	47.50	6.09
.0080	50.00	6.25
.0082	52.50	6.40
.0084	55.00	6.55
.0086	57.50	6.69
.0088	60.00	6.82
.0090	62.75	6.97
.0092	65.25	7.09
.0094	67.75	7.21
.0096	70.50	7.34
.0098	73.00	7.45
.010	75.75	7.58
.011	89.00	8.09
.012	103.00	8.58
.013	117.00	9.00
.014	131.25	9.38
.015	145.50	9.70
.020	220.00	11.00
.025	297.00	11.88
.030	375.00	12.52
.035	455.00	13.00
.040	535.50	13.39
.045	616.50	13.70
.050	698.25	13.96
.060	862.50	14.38
.070	1,028.00	14.68
.080	1,195.00	14.94
.090	1,362.00	15.13
10	1,529.00	15.29
.15	2,374.00	15.83
.20	3,223.00	16.12
.25	4,078.00	16.31
.30	4,931.00	16.44
.35	5,793.00	16.55
.40	6,654.00	16.64
.45	7,515.00	16.70
.50	8,379.00	16 76
.55	9,245.00	16.81
.60	10,111.00	16.85
.65	10,979.00	16.89
.70	11,850.00	16.93
.75	12,721.00	16.96
.80	13,596.00	17.00
.85	14,475.00	17.03
.90	15,361.00	17.07

Batch Size:	Present 3,000 kg			Present 10,000 kg			Present 20,000 kg			Long Range Above 3,000 kg	Losses
U-235 Concn:	1.5%	2.0%	3.0%	1.5%	2.0%	3.0%	1.5%	2.0%	3.0%	Normal to 3.0%	
$/kgm U	20	24	42	15	19	33	13	16	29	$2.50 - 5.50	1%

$UF_6 \rightarrow$ Metal Ingot

Little information is available regarding the effect of batch size and technological improvement on this unit conversion cost. A long-range estimate for slightly enriched material processed in large batches is about $1.50 to $2.50 per kilogram. Present costs for small batches of enriched material are probably at least two or three times this figure.

$UO_2 \rightarrow$ Pellets

At present uranium oxide is utilized in the form of small pellets which are inserted into the cladding material. The available estimates on converting UO_2 to pellets are:

	Present	Long Range
$/kgm U content	15	3.50

Shipment of Irradiated Fuel

The shipment of irradiated fuel has been discussed by Dryden[3]. The cost for this operation will depend to a considerable extent upon the security measures necessary for the shipment. It is believed that about $5/kgm is a representative cost.

Chemical Processing

A fuel reprocessing policy was recently issued by the AEC. This policy states that the AEC will reprocess fuel at a charge of $15,300 per short ton of fuel. In addition, there are charges for clean-up of the plant before and after the processing of any particular batch. These charges apply to both natural and slightly enriched uranium.

There is an economic balance involving the fuel rental charge, the frequency of shipment between the reactor and the fuel reprocessing plant, the

---

3 Dryden, Nucleonics, 14, No. 7 p. 77 (July 1956).

number of shipping cases and the reprocessing batch size. (In addition, the charge-discharge schedule of the reactor itself should probably be included in an economic optimization.) A separate memorandum is in preparation describing the results of such an economic balance. For purposes of this report, it is sufficient to assume a flat charge of $20/kgm of fuel reprocessed.

Uranium Nitrate $\longrightarrow UF_6$

This unit conversion cost should probably in the long range be about $2.00 to $2.50/kgm. The AEC has stated that it will soon establish charges for converting uranium nitrate to uranium hexafluoride, and it is believed that the cost established may be of this order of magnitude.

Plutonium Nitrate $\longrightarrow$ Buttons

This cost has recently been declassified at a figure of $1.50 per gram.

Credit for Plutonium

For plutonium purchased from non-U. S. sources, the AEC has stated a price of $12 per gram, independent of the isotopic analysis of the plutonium. Recently the AEC has also announced that for domestic plutonium purchased between now and July 1, 1962, the price will range from $45 to $30 per gram, depending upon the Pu-240 content of the material. For the year July 1, 1962, to July 1, 1963, the buying price will be $30 per gram, regardless of Pu-240 content. The AEC suggested that after 1963 the price might be expected to fall to the fuel value of plutonium.

For the purpose of this study, since heavy water reactors appear particularly attractive outside the United States, it was felt that $12 a gram would be the more appropriate selection. However, the effect of the higher plutonium credit is discussed.

Carrying Charges on Non-Depreciating Investment

In addition to the funds tied up in construction of the plant, money must be committed for working capital of various kinds. A large amount of such working capital is tied up in the non-nuclear costs incurred in fabricating the fuel elements. As discussed previously[4] it is felt that a

---

4 American-Standard, Report AECU-3398, "Comparison of Calder Hall and PWR Reactor Types," March, 1957.

carrying charge of 12% per dollar-year is appropriate for such funds.

The calculation of the addition to the power-generating cost to cover this carrying charge is rather complicated because of the time-shape of the expenditure schedule for such items and of the receipt of power revenue to cover these costs.

For example, money must be committed for the fabrication of new fuel elements from six to eight months before these elements will produce heat for power generation. On the other hand, power revenue is received from a particular unit of fuel three or four months before the chemical processing charges must be paid for that unit. The rigorous approach to this problem is to find the charge per unit of power generated, which, at 12% per dollar-year, has a present value equal to the present value of the interest charges on the funds tied up in non-nuclear core parts. As a short cut, the assumption can be made that the non-nuclear investment per kilogram of fuel is outstanding for six months plus half the average exposure time for a fuel element. Hence, the non-nuclear inventory charge per kilogram of fuel would be:

$$0.12 \times \text{non-nuclear costs } (0.5 + 0.5 \times \text{exp. time in years})$$

or

$$0.06 \times \text{non-nuclear costs } (1 + \text{exp time in years})$$

This non-nuclear carrying charge in heavy water reactors is frequently of a larger magnitude than the net fuel cost after plutonium credit. It somewhat counterbalances the advantages with regard to reactivity lifetime which are obtained by utilizing large cores at low specific power, since such cores have higher carrying charges.

Charges For Heavy Water

The AEC has announced that in addition to the sale of heavy water at $28 per pound, it will rent heavy water to reactor operators at a rate of 4% per dollar-year, based on the $28 price. This rental policy will make considerable difference in the cost of power from small heavy water reactors, since the inventory charge for this material is quite expensive. Therefore, power costs have been calculated on the basis of both rental and sale of heavy water to the reactor operators.

Fuel Element Costs

The cost of several types of zirconium-clad fuel elements which could be used in a natural uranium-heavy water reactor were estimated. The estimates are based on (1) published data when available, (2) verbal communication with commercial metal suppliers and fuel element fabricators, (3) verbal communications with reactor designers. Classified data and information of a confidential nature are not included, although the estimates are based on an evaluation of all the data.

The cost figures are estimated on the basis of present commercial costs or on costs projected into the immediate future. It is reasonable to expect these costs to drop about 50% in the next ten years.

In the present analysis, several different fuel elements are compared on the basis of direct cost per pound of contained uranium. This figure includes the cost of raw materials, scrap, alloying, pelletizing, fabricating, assembly, inspection, rejects, etc., but does not include the cost of uranium as furnished to the fuel element fabricator in the form of metal or UO_2 powder.

The elements are first discussed in separate sections where each element is briefly described and the cost per element is broken down into material and fabrication costs. Table C-II compares the elements on the basis of cost per pound of contained uranium. Only Elements A and B were used in the reactor designs given in this report, but a discussion of the effect of using other elements is included in Section III.

The zirconium prices were estimated by dividing the price of raw material (sponge, ingot, sheet or tube) by the estimated fraction recovered, i.e , by the fraction of zirconium purchased which appeared in the finished fuel elements. This quotient (α) is the true zirconium cost per pound of zirconium in the finished element. If the total cost of zirconium for a core loading was given and the total weight of zirconium in the core was given, α was determined by taking their ratio. Figure C-1 is a graph from which the cost of zirconium per pound of uranium can be determined for various values of and for various percentages (by weight) of zirconium in the element. This graph illustrates the rapid increase in zirconium cost (per pound of contained uranium) with increasing per cent zirconium in the element.

TABLE C-II

FUEL ELEMENT COST ESTIMATES

	Uranium Alloy Plate-Type Elements			Uranium Oxide-Type Elements		
	ANL Concept	Modified ANL Concept	EBWR	G.E. Dresden	PWR*	Hanford
$\alpha = \frac{\text{zirconium base price}}{\text{Fraction recovered}}$ ($/lb)	80	80	80	80	120	80
% Zirconium (by weight) in element	15	12	14	26	50	8.4
Zirconium cost per pound of uranium in element ($/lb U)	14	10	13	29	120	8
Niobium cost per pound of uranium in element ($/lb U)	1.5	1.5	1.5	0	0	0
Fabrication cost per pound of uranium in element ($/lb U)	19	14	18.5	41	50	19
Total direct cost per pound of uranium in element ($/lb U)	34	26	33	70	170	27

*Blanket Element

Figure C-1

Effect of Zirconium Content and Yield on Fuel Element Cost

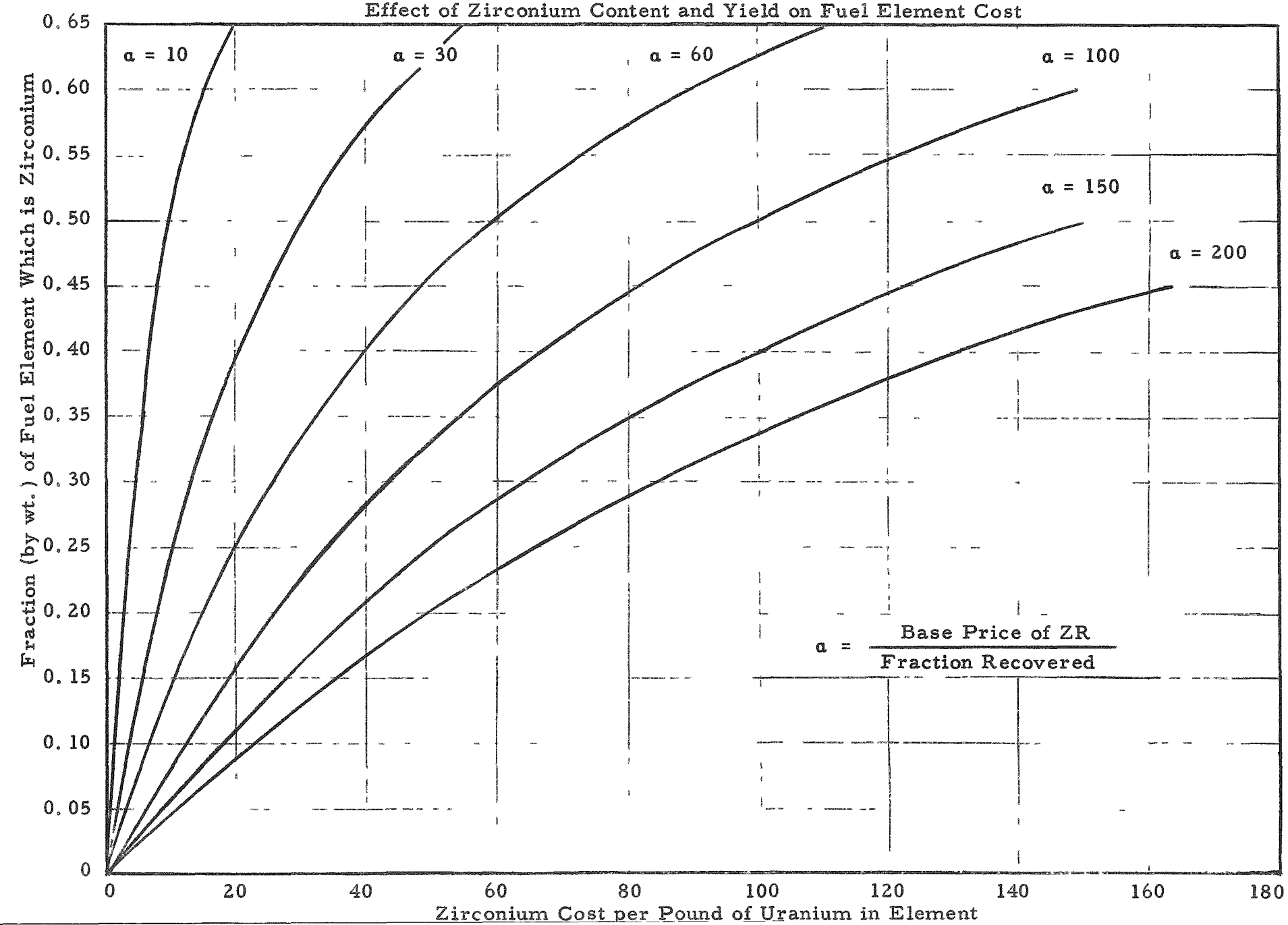

1. Plate-Type Elements

a. Modified ANL Element

Element A is a modification of the Argonne element discussed below. The number of plates was reduced from nine to six, with an integrated meat width of 21 in. instead of 29.78 in. The plate thickness was increased so that the total weight of uranium per element remained the same.

The direct cost* of the element has been estimated as follows:

Zirconium (38 lb, ~ = $80/lb)	$ 3,000
Niobium (5 lb at $100/lb)	500
Fabrication Cost	4,100
Total Direct Cost	$ 7,600
Weight of uranium 294 lb	
Total direct cost per pound of uranium	$ 26

b. ANL Element (Figure 3)

This element was proposed for heavy water reactor design by the Argonne National Laboratory.[5] It is made up of nine uranium-zirconium-niobium alloy plates clad with zircaloy and held by spacers in a 6-in. diameter by 12-ft zircaloy tube. The plates are produced by the "picture-frame" (roll-cladding) technique.

The direct cost of the element has been estimated as follows:

Zirconium (55 lb, ~ = $80/lb)	$ 4,400
Niobium (5 lb at $100/lb)	500
Fabrication Cost	5,100
Total Direct Cost	$ 10,000
Weight of uranium 294 lb	
Total direct cost per pound of uranium	$ 34

Very rough estimates by commercial suppliers placed the direct cost of this element between $6 000 and $18,000. The value of $10,000 is reasonable, since it falls within this range and is in good agreement with the commercial

---

* Direct cost includes everything but the cost of uranium as metal or UO_2 powder.

[5] H. P. Iskenderian, et al, Geneva Conference Paper P/495 Vol 3 (1955)

cost (per pound of uranium) quoted for similar type elements (EBWR).

c. EBWR Element

This element is made up of six uranium alloy, zircaloy-clad plates held between two side plates to form a box approximately 3-1/2 in. square with 54 in. of active length

The direct cost of the element is estimated as follows:

Zirconium (20 lb. δ = \$80/lb)	\$1,600
Niobium (2 lb at \$100/lb)	200
Fabrication cost	2,200
Total Direct Cost	\$4,000
Weight of uranium: 120 lb	
Total direct cost per pound of uranium	\$ 33

Two commercial suppliers quoted a direct cost of \$4,000 for this element. ANL estimates a total direct cost (per pound of uranium) of \$22.5; but it is believed that the somewhat higher figure is more realistic for commercial production.

2. Oxide-In-Tube-Type Elements

a. G.E. Dresden Element

This element is made up of 25 1/2 in. diameter zircaloy tubes, nine ft long, grouped in a square bundle and contained in a 3-3/4 in. square zircaloy channel. Each tube is filled with UO_2 pellets (1/2 in. diameter and 1/2 in. long).

The direct cost of the element is estimated as follows:

Zirconium (65 lb, δ = \$80/lb)	\$ 5,200
Fabrication cost	7,200
Total direct cost	\$12,400
Weight of uranium: 177 lb	
Total direct cost per pound of contained uranium	\$ 70

b. Hanford Element

A zircaloy-jacketed uranium oxide element currently under development at Hanford contains only 8% zirconium. Details of this element have not

been published, but it has been estimated that the total cost (excluding the cost of UO_2 powder) will be about $27/lb of contained uranium. The low cost is due to the low zirconium content (resulting from the unique design and the absence of a shroud or channel) and the minimum amount of assembly work required

c. PWR Blanket Element

This element is made up of 120 tubes fastened into bundles about 6 in. square by 10 in. long. Seven bundles are mechanically assembled end-to-end to form a 6-ft active length. The tubes are filled with UO_2 pellets

This element is considerably more expensive than the plate-type elements and the tube-type element discussed above. Fabrication has been estimated at $50/lb of contained uranium. The cost of zirconium is estimated to be $120/lb of contained uranium The element is approximately 50% (by weight) zirconium compared with 24% for the G.E. element, 15% for the plate-type elements, and 8% for the Hanford element. Practically all of the additional cost is due to the increased zirconium content which raises the total cost to $170/lb of contained uranium, compared with considerably lower costs for the lower-zirconium designs

Summary

Table C-II summarizes the fuel element cost estimates given in the preceding sections.

UO_2 powder and uranium metal costs are not included in the estimates The cost of producing UO_2 ceramic parts from UO_2 powder (about $5 to $8/lb of contained uranium as noted above) is included in the fabrication costs.

The zirconium cost per pound of zirconium in the finished elements ($\mathcal{J}$) is about $120 for the PWR design and about $80 for the other elements. The higher PWR cost is due primarily to the low recovery of purchased zirconium. This relatively low recovery is probably a result of the complex design and the resulting difficulties in fabrication. A decrease in $\mathcal{J}$ might be justified in view of the recent decrease in sponge costs. The $120 value, however, was calculated from official estimates (for the second PWR core) which presumably included a reduction in sponge price.

The fabrication cost and the total cost estimates correlate reasonably well with the per cent of zirconium in the elements. If the total direct

cost (per pound of contained uranium) of each element is divided by the per cent zirconium, a fairly constant ratio, 2 8 ± 0.5 is obtained. The ratio of fabrication cost (per pound of contained uranium) to per cent zirconium is 1.6 ± 0.6 for all elements. These ratios point out the fact that fabrication costs and total costs are strongly dependent on the amount of zirconium handled

Cost of Stainless Steel Elements

If the uranium oxide elements were fabricated from stainless steel instead of zirconium, it would be reasonable to assume that:

1) UO_2 fabrication costs ($5 - $8/lb of uranium) would remain the same.
2) Stainless steel costs would be proportional to zirconium costs for each element.
3) Stainless steel fabrication costs would be proportional to zirconium fabrication costs for each element.

These assumptions and the following costs were used:

1) $7/lb U for pellet fabrication cost.
2) An estimated proportionality factor of 10:1 for true metal costs per pound of metal in the element. (λ for S/S = 10% of λ for Zr)
3) An estimated proportionality factor of 10:1 for metal fabrication cost. This was based on direct comparative cost estimates for carrying out specific fabrication operations with zirconium as compared with stainless steel.

The total direct cost of stainless steel elements was thereby estimated as follows:

1) G.E. Dresden element $14/lb U
2) PWR element $24/lb U
3) Hanford element $10/lb U

These costs for stainless steel elements are farther below the costs shown in Table C-II for zirconium elements than is commonly found. The main reason for this difference is that the zirconium costs of Table C-II are near-term estimates and are thus higher than predicted in the longer range.

Information Sources on Fuel Elements

The following organizations were of invaluable assistance in compiling the above information on fuel-element costs:

Company	Type Data Obtained
Metals and Controls Corporation	Plate-type fuel elements
Sylvania Electric Company	Plate-type fuel elements
Argonne National Laboratory	EBWR fuel elements
G.E. - Atomic Power Equipment Dept.	Dresden fuel elements
G.E. - Hanford	Hanford oxide-type fuel element concepts
Mallinckrodt Chemical Co.	Costs and technology of nuclear materials
Allegheny-Ludlum Steel Corp.	Zirconium fabrication economics and technology
Wolverine Tube Company	Zirconium fabrication economics and technology

Summary of Over-all Fuel Cycle Costs

Table C-III summarizes the fuel cycle costs used in this report. Especially for the cost of fuel and the inventory charge, no cost distinction was made between normal and slightly enriched fuel. In a power-reactor economy, it is believed that slightly enriched uranium will be almost as common an item in fuel-preparation plants as well normal uranium. The slight enrichments present no criticality concern, and other operating problems are apparently no more difficult than for the normal type. Hence there seems no basis for a long-range cost distinction in processing steps between normal and slightly enriched uranium.

TABLE C-III

SUMMARY OF FUEL CONVERSION AND FABRICATION COSTS

	$/kgm U	
	Normal U	Enriched U
Ship UF_6	$ -	$ 0.03
$UF_6 \longrightarrow$ Metal	0.90 *	1.50
Manufacture Fuel Elements:		
Element A	57.00	57.00
Element B	75.00	75.00
Ship Elements	0.03	0.03
Ship Irradiated Elements	5.00	5.00
Chemical Processing	20.00	20.00
Ship Uranium Nitrate **	0.04	0.04
$UN \longrightarrow UF_6$ **	1.90	1.90
Ship UF_6 **	0.14	0.14
Sub-total ***		
Element A	$ 85.01	85.64
Element B	103.01	103.64

* This figure is a correction factor necessary because the IBM 650 code used to compute the burn-up cost treated normal uranium as UF_6 costing $39.10/kgm, while actually normal uranium would be purchased from the AEC as the metal billet at $40.00/kgm.

** At very long burn-ups, it is cheaper not to reclaim the U-235 value left in spent fuel. In such cases these costs were omitted and the burn-up cost taken as the initial fuel cost.

*** To obtain the total per-kilogram fuel cycle cost, the following costs were added to this sub-total: (a) the cost of converting plutonium nitrate to the metal, (b) the burn-up cost after plutonium credit, and (c) the inventory carrying charge for uranium and non-nuclear core parts.

APPENDIX D

METHODS OF REACTOR PHYSICS CALCULATIONS

The diffusion theory methods used to calculate the core parameters in Tables D-I and D-II are those previously published by J. Cobb, et. al., of American-Standard. This method is described later. An exception to this method is the value of the fast multiplication factor, ϵ, which was taken as 1.03 for all cases. The age, τ, was calculated simply by applying a density correction to the age for room temperature D_2O, 127 in^2.

For all cases considered the temperature of the water between the shrouds was assumed to be an average of 250°F.

The isotopic change with exposure was calculated from the following equations, using N_{25}/N_{o25} (the concentration of U-235 atoms at some exposure divided by the initial concentration).

$$\frac{d(N_{49}/N_{o25})}{d(N_{25}/N_{o25})} = -\frac{(N_{28}/N_{o25})}{(N_{25}/N_{o25})}\frac{\sigma_{c28}}{\sigma_{t25}} - \left[\epsilon(1-p)\frac{\nu_{25}\sigma_{f49}}{\sigma_{t25}} e^{-\tau B^2} \frac{(N_{49}/N_{o25})}{(N_{25}/N_{o25})}\right] - \epsilon(1-p)\nu_{25} e^{-\tau B^2} + \frac{\sigma_{t49}}{\sigma_{t25}}\frac{(N_{49}/N_{o25})}{(N_{25}/N_{o25})}$$

$$\frac{d(N_{40}/N_{o25})}{d(N_{25}/N_{o25})} = -\frac{(N_{49}/N_{o25})}{(N_{25}/N_{o25})}\frac{\sigma_{c49}}{\sigma_{t25}} + \frac{(N_{40}/N_{o25})}{(N_{25}/N_{o25})}\frac{\sigma_{t40}}{\sigma_{t25}}$$

$$\frac{d(N_{41}/N_{o25})}{d(N_{25}/N_{o25})} = -\frac{(N_{40}/N_{o25})}{(N_{25}/N_{o25})}\frac{\sigma_{t40}}{\sigma_{t25}} + \frac{(N_{41}/N_{o25})}{(N_{25}/N_{o25})}\frac{\sigma_{t41}}{\sigma_{t25}}$$

with the accumulated heat of fission produced given by

$$\frac{d(E/N_{o25})}{d(N_{25}/N_{o25})} = -\gamma\left(1+\frac{f}{F}\right)\left[\frac{\sigma_{f25}}{\sigma_{t255}} + \frac{(N_{49}/N_{o25})}{(N_{25}/N_{o25})}\frac{\sigma_{f49}}{\sigma_{t25}} + \frac{(N_{41}/N_{o25})}{(N_{25}/N_{o25})}\frac{\sigma_{f41}}{\sigma_{t25}}\right]$$

N_{25} concentration of U-235

N_{28} concentration of U-238 (taken to be constant throughout exposure for isotope calculations)
(actual change was calculated approximately)

111

TABLE D-I

FUEL ELEMENT A

REACTOR PARAMETER SURVEY
(Fresh Metal Values)

Fuel Element Type A: Six Zr clad plates, each 0.17 in. thick. Total fuel plate width 21 in. Coolant channel width 0.35 in.

Fuel Element Type B: Nine Zr clad plates, each 0.12 in. thick. Total fuel plate width 30 in. Coolant channel width 0.35 in.

Case	Density Coolant (gm/cc)	Uranium Enrichment % U-235	$\eta\epsilon$	f	p	k_∞	L_t^2	τ	M^2	β^2
Fuel Element A										
6" lattice, .35" channel width										
167	.4	1.5	1.694708	.9487382	.5921009	0.9520002	25.65	333.5	359.15	
168		1.7	1.738048	.9496795	.5924663	0.9779181	23.37		356.87	
169		1.9	1.773862	.9505867	.5928328	0.9996404	21.46		354.96	
177	.66	1.5	1.694708	.9485890	.6730666	1.082009	22.78	224.98	247.76	331
178		1.7	1.738048	.9495355	.6734432	1.111409	20.80		245.78	453
179		1 9	1.773862	.9504473	6738206	1.136036	19.15		244.13	557
187	.95	1.5	1.694708	.9476514	.7294091	1.171425	20.37	157.65	178.02	963
188		1.7	1.738048	.9485215	.7297707	1.203082	18.65		176.30	1152
189		1.9	1.773862	.9493637	.7301329	1 229573	17.21		174.86	1313
.50" channel width										
227	.4	1.5	1 694708	.9486844	.5854995	0.9413327	25.87	333.5	359.37	
228		1.7	1.738948	9496254	.5858624	0.9669627	23.59		357.09	
229		1.9	1.773862	.9505326	.5862261	0.9884438	21.68		355.18	
237	.66	1.5	1.694708	.9484988	.6636337	1 066744	23.08	224.98	248.06	269
238		1.7	1.738048	.9494452	.66401105	1.095739	21.10		246.08	389
239		1.9	1.773862	.9503568	.6643891	1.120028	19.46		244.44	491
247	.95	1.5	1.694708	.9475201	.7181665	1.153210	20.73	157.65	178.38	859
248		1.7	1.738048	.9483901	.7185326	1.184391	19.10		176.66	1044
249		1.9	1.773862	.9492320	.7188994	1.210488	17.58		175.23	1201

(Continued)

Case	Density Coolant (gm/cc)	Uranium Enrichment % U-235	$\eta\epsilon$	f	p	k_∞	L_t^2	τ	M^2	β^2
Fuel Element A										
7" lattice, .35" channel width										
161	.4	.71	1.37235	.944422	.736222	0.95420	53.50	241.39	294.88	
162		.8	1.42958	.944890	.736324	0.99462	49.90		291.28	
163		.9	1.48489	.945420	.736439	1.03385	46.40		287.79	117
171	.66	.71	1.37235	.944221	.787990	1.02108	49.67	189.98	239.65	087
172		.8	1.42958	.944696	.788096	1.06434	46.40		236.38	272
173		.9	1.48489	.945232	.788217	1.10631	43.23		233.21	455
181	.95	.71	1.37235	.943631	.824379	1.06756	46.20	149.88	196.08	344
182		.8	1.42958	.944062	.824482	1.11273	43.24		193.12	583
183	.50" channel	.9	1.48489	.944550	.824598	1.15654	40.37		190.25	822
221	.4	.71	1.37235	.944367	.732020	0.948699	53.75	241.39	295.14	
222		.8	1.42958	.944835	.732121	0.988888	50.15		291.54	
223		.9	1.48489	.945365	732236	1.02789	46.66		288.05	096
231	.66	.71	1.37235	.944128	.781931	1.01313	50.04	189 98	240.02	069
232		.8	1.42958	.944603	782037	1.05605	46.78		236.75	236
233		.9	1.48489	.945140	.782158	1.09770	43.61		233 59	419
241	.95	.71	1.37235	.943498	.817088	1.05797	46.68	149 88	196.56	386
242		.8	1.42958	.943928	817192	1.10274	43.71		193.60	530
243		.9	1 48489	944416	.817309	1.14616	40.85		190.73	766
8" lattice, .35" channel width										
131	.4	.71	1.37235	.943971	.816468	1.05770	67.83	204.34	272 2	211
132		.8	1.42958	944465	.816540	1.10248	63.40		267.75	382
133		.9	1.48489	.945020	816620	1.14592	59.11		263.45	553
141	.66	.71	1.37235	.943753	.852732	1.10442	65.01	173.25	238.26	438
142		.8	1.42958	.944254	.852808	1.15119	60.88		234.13	645
143		.9	1.48489	.944816	.852892	1.19656	56.88		230.13	854
151	.95	.71	1.37235	.943145	.878416	1.13696	62.35	146.27	208 62	656

(Continued)

Case	Density Coolant (gm/cc)	Uranium Enrichment % U-235	$\eta\epsilon$	f	p	k_∞	L_t^2	τ	M^2	β^2
Fuel Element A										
8" lattice, .35" channel width										
152		.8	1.42958	.943602	.878489	1.18504	58.51		204.78	903
153		.9	1.48489	.944115	.878572	1.23168	54.78		201.05	1152
.5" channel width										
191	.4	.71	1.37235	.943914	.813539	1.05384	68.14	204.34	272.48	197
192		.8	1.42958	.944408	.813609	1.09846	63.71		268.05	367
193		.9	1.48489	.944964	.813689	1.14174	59.42		263.76	537
201	.66	.71	1.37235	.943658	.848472	1.09880	65.47	173.25	238.73	413
202		.8	1.42958	.944159	.848547	1.14533	61.35		234.60	619
203		.9	1.48489	.944721	.848631	1.19046	57.35		230.60	825
211	.95	.71	1.37235	.943008	.873256	1.13011	62.96	146.27	209.23	621
212		.8	1.42958	.943465	.873331	1.17791	59.12		205.40	866
213		.9	1.48489	.943977	.873413	1.22426	55.40		201.67	1112
9" lattice, .35" channel width										
131	.4	.71	1.37235	.943440	.865962	1.12119	85.06	184.92	269.97	448
132		.8	1.42958	.943964	.866015	1.16866	79.67		264.59	637
133		.9	1.48489	.944548	.866075	1.21471	74.45		259.36	827
141	.66	.71	1.37235	.943202	.892959	1.15585	83.16	163.67	264.83	631
142		.8	1.42958	.943733	.893015	1.20480	78.05		241.72	847
143		.9	1.48489	.944324	.893077	1.25229	73.10		236.77	1065
151	.95	.71	1.37235	.942574	.912183	1.17995	81.34	144.03	225.37	798
152		.8	1.42958	.943061	.912238	1.22986	76.50		220.53	1042
153		.9	1.48489	.943602	.912300	1.27826	71.81		215.84	1289
.5" channel width										
191	.4	.71	1.37235	.943382	.863788	1.11830	85.43	184.92	270.34	437
192		.8	1.42958	.943906	.863840	1.16566	80.04		264.95	625
193		.9	1.48489	.944489	.863899	1.21559	74.82		259.73	814

(Continued)

Case	Density Coolant (gm/cc)	Uranium Enrichment % U-235	$\eta\epsilon$	f	p	k_∞	L_r^2	τ	M^2	B^2
Fuel Element A										
.5" channel width										
201	.66	.71	1.37235	.943105	.889779	1.15161	83.73	163.67	247.40	612
202		.8	1.42958	.943635	.889834	1.20039	78.62		242.30	827
203		9	1.48489	.944226	.889897	1.24770	73.67		237.34	1043
211	.95	71	1.37235	.942432	.908314	1.17476	82.11	144.03	226.14	772
212		.8	1.42958	.942918	.908369	1.22446	77.28		221.31	1014
213		.9	1.48489	.943460	.908431	1.27265	72.59		216.62	1258

TABLE D-II

FUEL ELEMENT B

REACTOR PARAMETER SURVEY
(Fresh Metal Values)

Fuel Element Type A: Six Zr clad plates, each 0.17 in. thick. Total fuel plate width 21 in. Coolant channel width 0.35 in.

Fuel Element Type B: Nine Zr clad plates, each 0.12 in. thick. Total fuel plate width 30 in. Coolant channel width 0.35 in.

Case	Density Coolant (gm/cc)	Uranium Enrichment % U-235	$\eta\epsilon$	f	p	k_∞	L_t^2	τ	M^2	β^2
Fuel Element B										
7" lattice, .35" channel width										
071	.4	.71	1.37235	.9405549	.701146	0.905019	64.79	384.3	449.1	
072		.8	1.42958	.9410831	.701264	0.94345	60.40		444.7	
073		.9	1.48489	.9416512	.701369	0.98069	56.14		440.4	
081	.66	.71	1.37235	.9403031	.75786	0.97796	54.53	241.3	295.8	
082		.8	1.42958	.9408425	.757979	1.01949	50.90		292.2	
083		.9	1.48489	.9414213	.758118	1.05978	47.38		288.7	207.1
091	.95	.71	1.37235	.939372	.796955	1.02739	46.59	154.53	201.1	136.2
092		.8	1.42958	.939824	.797074	1.07091	43.55		198.0	358.1
093		.9	1.48489	.940303	.797207	1.11310	40.60		195.1	579.7
074	.4	1.0	1.532316	.9421932	.7015326	1.012829	52.48	384.3	436.78	29
075		1.1	1.573436	.9427130	.7016672	1.040782	49.30		433.60	94
076		1.3	1.641192	.9436961	.7019368	1.087150	44.03		428.33	203
084	.66	1.0	1.532316	.9419726	.7582564	1.094467	44.36	241.3	285.66	330
085		1.1	1.573436	.9425005	.7583949	1.124672	41.73		283.03	440
086		1.3	1.641192	.9434972	.7586722	1.174774	37.38		278.68	627
094	.95	1.01	1.532316	.9407546	.7973412	1.149394	38.06	154.53	192.59	776
095		1.1	1.573436	.9411833	.7974753	1.180975	35.86		190.39	951
096		1.3	1.641192	.9419855	.7977436	1.233295	32.20		186.73	1249

(Continued)

Case	Density Coolant (gm/cc)	Uranium Enrichment % U 235	$\eta\epsilon$	f	p	k_∞	L_t^2	τ	M^2	β^2
Fuel Element B										
8" lattice, .35" channel width										
011	.4	.71	1.37235	.9401107	.793048	1.02316	75.66	277.2	352.9	65.6
012		.8	1.42958	.9406655	.793130	1.066567	70.67		347.9	191.3
013		.9	1.48489	.9412593	.793222	1.108659	65.82		343.0	316.8
021	.66	.71	1.37235	.9398406	.832395	1.07362	68.08	204.57	272.7	269.9
022		.8	1.42958	.9404066	.832479	1.11918	63.70		268.3	444.2
023		.9	1.48489	.9410112	.832576	1.16336	59.44		264.0	618.8
031	.95	.71	1.37235	.938889	.859726	1.10774	61.57	152.77	214.3	502.8
032		.8	1.42958	.939368	.859810	1.15464	57.71		210.5	734.6
033		.9	1.48489	.939873	.859903	1.200081	53.96		206.7	967.9
014	.4	1.0	1.532316	.9418234	.7933157	1.144890	61.65	277.2	338.9	427
015		1.1	1.573436	.9423624	.7934087	1.176424	58.03		335.23	526
016		1.3	1.641192	.9433775	.7935950	1.228694	52.03		329.23	694
024	.66	1.0	1.532316	.9415847	.8326730	1.201385	55.79	204.57	260.36	774
025		1.1	1.573436	.9421319	.8327696	1.234485	52.60		257.17	912
026		1.3	1.641192	.9431604	.8329628	1.289349	47.33		251.90	1149
034	.95	1.0	1.532316	.9403467	.8599974	1.239177	50.73	152.77	203.50	1175
035		1.1	1.573436	.9407949	.8600914	1.273177	47.93		200.70	1361
036		1.3	1.641192	.9416294	.8602797	1.329472	43.27		196.04	1681

TABLE D-III

GEOMETRICAL BUCKLINGS FOR VARIOUS CORE SIZES: RIGHT CYLINDERS

Diameter Active Core	+ 2.2 ft Reflector Saving	$(10^6)cm^{-2}$ Geometrical Buckling
9 0'	11.2'	283
9 5'	11.7'	259.5
10 0'	12.2'	238.7
10.5'	12.7'	220.3
11 0'	13.2'	203.9
11.5'	13.7'	189.3
12.0'	14.2'	176.2
12.5'	14.7'	164.4
13 0'	15.2'	153.8

N_{49} concentration of Pu-239

N_{40} concentration of Pu-240

N_{41} concentration of Pu-241

In equations that follow N will be the isotopic concentration with type indicated by subscript

σ_t is the total cross section (fission plus capture)

σ_c is the capture cross section

σ_f is the fission cross sections

ν_{xx} is the neutrons produced per fission

η_{25} is the neutrons produced per neutron absorbed in U-235

E is MWD/T with γ chosen appropriately

f/F ratio of fast to thermal fissions

$e^{-\tau B^2}$ is the fast leakage escape probability, with τ taken as the age to thermal energy

ηf was calculated from

$$\eta f = \left(\frac{N_{25}}{N_{o25}} \nu_{25} \frac{\sigma_{f25}}{\sigma_{t25}} + \frac{N_{49}}{N_{o25}} \nu_{49} \frac{\sigma_{f49}}{\sigma_{t25}} + \frac{N_{41}}{N_{o25}} \nu_{41} \frac{\sigma_{f41}}{\sigma_{t25}} \right)$$

$$\overline{\left\{ \left[\frac{N_{25}}{N_{o25}} + \frac{N_{28}}{N_{o25}} \frac{\sigma_{c28}}{\sigma_{t25}} + \frac{N_{49}}{N_{o25}} \frac{\sigma_{t49}}{\sigma_{t25}} + \frac{N_{40}}{N_{o25}} \frac{\sigma_{t40}}{\sigma_{t25}} + \frac{N_{41}}{N_{o25}} \frac{\sigma_{t41}}{\sigma_{t25}} + \frac{N_{f.p.}}{N_{o25}} \frac{\sigma_{tf.p.}}{\sigma_{t25}} + \frac{N_{sm}}{N_{o25}} \frac{\sigma_{tsm}}{\sigma_{t25}} + \frac{N_{xe}}{N_{o25}} \frac{\sigma_{txe}}{\sigma_{t25}} + \frac{N_{alloy}}{N_{o25}} \frac{\sigma_{alloy}}{\sigma_{t25}} \right] + \frac{N_{clad}}{N_{o25}} \frac{\sigma_{tclad}}{\sigma_{t25}} \frac{\overline{\phi}_{clad}}{\overline{\phi}_{metal}} + \frac{N_{moderator}}{N_{o25}} \frac{\sigma_{t\ moderator}}{\sigma_{t25}} \frac{\overline{\phi}_{moderator}}{\overline{\phi}_{metal}} \right\}}$$

N_{alloy}, N_{clad}, $N_{moderator}$ are the alloy, cladding, and moderator atom associated with the metal. The average fluxes, $\overline{\phi}/\overline{\phi}_{metal}$, were taken from the calculations performed for Tables D-I and D-II.

The xenon and samarium concentrations, N_{Xe} and N_{Sm}, are equilibrium values calculated in the ordinary manner. These equilibrium values were taken throughout the entire exposure period to be those resulting from U-235 at its initial concentration.

The power densities employed to calculate the equilibrium Xe poisoning were:

	Coolant Density	Specific Power (MW/Metric Ton) Boiling	Pressurized
Element A	.4	16.5	
	.66	16.5	
	.95		18.9
Element B	.4	25.4	
	.66	25.4	
	.95		37.9

These power densities have subsequently been changed to:

Element A	11.12 MW/Metric Ton
Element B	15.98 MW/Metric Ton

The effect of this change in equilibrium xenon concentration on buckling and hence upon allowable exposure is negligible. This is not true of the xenon transient, of which about 80% of the magnitude is directly proportional to the power density.

These calculations consider the flux to be uniform over the entire reactor.

$N_{f.p.}$ is the number of fission products produced taken to be twice the number of atoms fissioned.

$\sigma_{f.p.}$ is half the average cross section of a fission product pair. Due to the neutron capture by fission products, this effective cross section changes with exposure. Again, as in the case of Xe and Sm, this effective cross section is taken to be that of U-235 fission.[1]

[1] J. W Webster, "The Low Cross-Section Fission Product Poison," IDO-16100.

The thermal diffusion length was considered to be constant during exposure, as were the reactor parameters p, ϵ, and τ.

The Pu credit was calculated on the basis of $12/gram of Pu present at the end of exposure regardless of isotopic content.

The value as UF_6 of the uranium was calculated from the expression for the infinite cascade:

$$C_p(x) = \left[\frac{(x-x_o)(1-2x_o)}{x_o(1-x_o)} + (1-2x) \ln \frac{x_o(1-x)}{x(1-x_o)} \right] C_\Delta$$

where x is the wt % U-235 of the metal whose value is to be calculated, x_o is the tails concentration taken as .0022 weight fraction U-235, and C_Δ is the cost of separative work taken as $37 25/kg.

Summary of Cross Sections and Other Physical Constants

Thermal Values (Maxwellian average)

σ_{c28} = 2 225 barns
σ_{t25} = 546.6 barns
σ_{f25} = 462 4 barns
ν_{25} = 2.46
σ_{trU} = 8.3 barns
σ_{t49} = 1292 barns (150 barns added for resonance)
σ_{f49} = 822 barns (150 barns added for resonance)
ν_{49} = 2 88
σ_{t40} = 523 barns (100 barns added for resonance)
σ_{f41} = 1000 barns
σ_{c41} = 400 barns
ν_{41} = 3.3
σ_{Xe} = 2 84 (10^6) barns
σ_{Sm} = 5 3 (10^4) barns
σ_{cZr} = .146 barns
σ_{sZr} = 6.2 barns
σ_{trZr} = 6.2 barns
σ_{cNb} = .890 barns
σ_{sNb} = 6.4 barns
σ_{cD_2O} = .906 (10^{-3}) barns
σ_{trD_2O} = 11.28 barns

Resonance Values

σ_{sD_2O} = 10.5 barns

σ_{trD_2O} = 8.109 barns

ξ_{D_2O} = .506 (average change in the logarithm of the energy upon scattering)

σ_{sZr} = 6.2 barns

σ_{trZr} = 6.2 barns

ξ_{Zr} = 0.0218

σ_{trU} = 8.0 barns

$\sigma_{a_{eff}U} = 7.5\ (1 + 3.4\ \frac{s_{eff}}{M})$

Other Values

N_U = 0.0478 (10^{24}) uranium nuclei/cm^3

N_{Zr} = 0.04225 (10^{24}) zirconium nuclei/cm^3

N_{Nb} = 0.05445 (10^{24}) niobium nuclei/cm^3

N_{D_2O} = 0.03346 (10^{24}) deuterium oxide nuclei/cm^3 (at density 1.1 grams/cm^3)

γ = 0.943 MWD/gram U^{235} fissioned

f/F = .10 fast fissions/thermal fission

λ_{Xe} = 2.1 (10^{-5}) sec^{-1} Xenon decay constant

Description of 4F Code

4F is a code for the Datatron which, by means of diffusion theory calculations with a few simple modifications of the recipe type, computes the four factors, ϵ, η, f and p , the infinite multiplication factor and most of the two-group constants for a homogeneous core equivalent to a heterogeneous lattice. Options are provided for five geometries, in three of which provision is made for moderation in two distinct regions. The possible geometries are shown in the figure following.

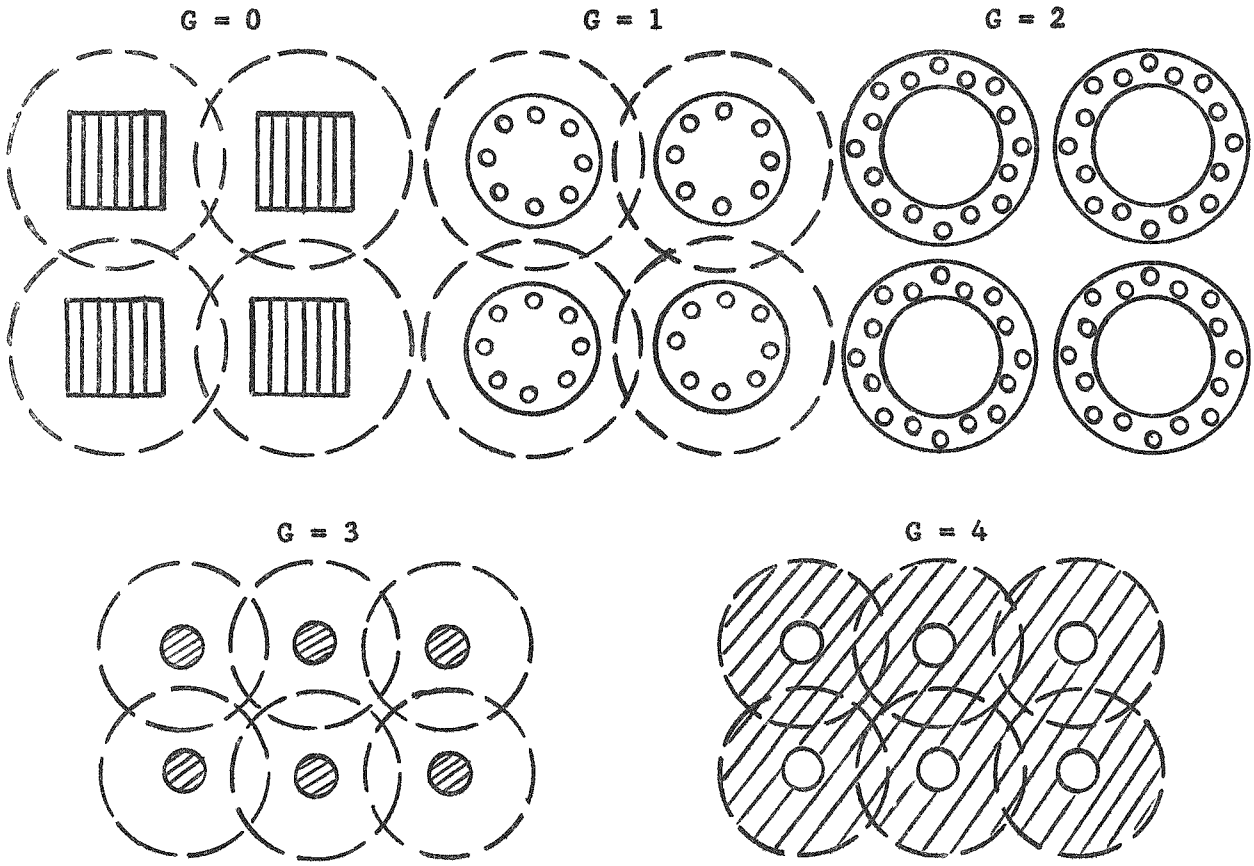

With a little imagination, a few more useful geometries to which the 4F code can be applied by minor modification or in its present form can probably be found.

The purpose of the 4F code is to provide an approximate relative computation of lattice parameters for use in the preliminary comparative study of reactor designs. The calculation takes on the order of a minute of machine time per case.

Calculations

The equations below are computed by the code in the order given and the results stored in the memory locations.

$$ {}_t\nu \; {}_t\sigma_f^{U} = \eta^{25} \; {}_t\sigma_a^{25} \; N^{25} $$

$$ {}_t\sigma_a^{28} = {}_o\sigma_a^{28} \sqrt{\frac{\pi}{2} \; \frac{To}{T}} \; (1 - N^{25}) $$

$$ \eta = \frac{{}_t\nu \; {}_t\sigma_f^{U}}{(N^{25} \; {}_t\sigma_a^{25}) + {}_t\sigma_a^{28}} $$

$$\epsilon_1 - 1 = \left\{ \left[({}_f\nu - 1)\ {}_f\sigma_f^{\,f} - {}_f\sigma_c^{\,f} \right] \frac{P_1}{{}_f\sigma_t^{\,f}} \right\} \left\{ 1 - \frac{P_1}{{}_f\sigma_f^{\,f}} \left[{}_f\nu\ {}_f\sigma_f^{\,f} + {}_f\sigma_e^{\,f} \right] \right\}^{-1}$$

$$P_2 = \Omega\, e^{-2\Sigma x}$$

$$\epsilon = 1 + (\epsilon_1 - 1)\ (1 + P_2)$$

$${}_t\sigma_a^{\,al} = {}_o\sigma_a^{\,al} \sqrt{\frac{\pi T_o}{2T}}$$

$${}_t\sigma_a^{\,cl} = {}_o\sigma_a^{\,cl} \sqrt{\frac{\pi T_o}{2T}}$$

$${}_t\sigma_a^{\,s_o} = {}_o\sigma_a^{\,s_o} \sqrt{\frac{\pi T_o}{2T}}$$

$${}_t\sigma_a^{\,m_1} = {}_o\sigma_a^{\,m_1} \sqrt{\frac{\pi T_o}{2T}}$$

$${}_t\sigma_a^{\,m_o} = {}_o\sigma_a^{\,m_o} \sqrt{\frac{\pi T_o}{2T}}$$

$$\alpha = \frac{N^{25}}{1 - 0.01276\ N^{25}}$$

$${}_t\sigma_f^{\,25} = \frac{\eta^{25}\ {}_t\sigma_a^{\,25}}{{}_t\nu}$$

$$\frac{N^{Xe}}{N^{25}} = \frac{P \times 3.82 \times 10^{-2}}{\alpha + \dfrac{{}_t\sigma_a^{\,Xe}}{{}_t\sigma_f^{\,25}}\ P \times 6.474 \times 10^{-2}}$$

$$\frac{N^{Sm}}{N^{25}} = \frac{.014 \times {}_t\sigma_f^{\,25}}{{}_t\sigma_a^{\,Sm}}$$

$$N^{f.p.}\ {}_t\sigma_a^{\,f.p.} = \left[\frac{N^{Xe}}{N^{25}}\ {}_t\sigma_a^{\,Xe} + \frac{N^{Sm}}{N^{25}}\ {}_t\sigma_a^{\,Sm} \right] N^{25}$$

$${}_t\sigma_a^{\,f} = {}_t\sigma_a^{\,28} + {}_t\sigma_a^{\,25}\ N^{25} + {}_t\sigma_a^{\,al}\ N^{al} + N^{f.p.}\ {}_t\sigma_a^{\,f.p.}$$

$$\rho^f = \left\{ \begin{array}{ll} \rho^f(\text{input}) \text{ if } \rho^f(\text{input}) \text{ is not equal to 0.} & \\ \left[\dfrac{238 - 3\ N^{25}}{\rho^U} + \dfrac{N^{al} A^{al}}{\rho^{al}} \right]^{-1} & A^f \text{ if } \rho^f(\text{input}) \text{ is equal to 0.} \end{array} \right\}$$

$$A^f = 238 - 3N^{25} + N^{al} A^{al}$$

$$_t\Sigma_a^f = {}_t\sigma_a^f \frac{\rho^f \times .6023}{A^f}$$

$$_t\Sigma_a^{cl} = {}_t\sigma_a^{cl} \frac{\rho^{cl} \times .6023}{A^{cl}}$$

$$_t\Sigma_a^{So} = {}_t\sigma_a^{So} \frac{\rho^{So} \times .6023}{A^{So}}$$

$$_t\Sigma_a^{m_1} = {}_t\sigma_a^{m_1} \frac{\rho^{m_1} \times .6023}{A^{m_1}}$$

$$_t\Sigma_a^{m_o} = {}_t\sigma_a^{m_o} \frac{\rho^{m_o} \times .6023}{A^{m_o}}$$

$$_t\Sigma_{tr}^{m_o} = {}_t\sigma_{tr}^{m_o} \frac{\rho^{m_o} \times .6023}{A^{m_o}}$$

$$_t\Sigma_a^{fNU} = (N^{f.p.} \, {}_t\sigma_a^{f.p.} + N^{al} \, {}_t\sigma_a^{al}) \frac{.6023 \, \rho^f}{A^f}$$

$$_t\mathcal{K}^{m_o} = \sqrt{3 \, {}_t\Sigma_a^{m_o} \, {}_t\Sigma_{tr}^{m_o}}$$

if $G = 0$

$$\xi_1 = \left[{}_t\mathcal{K}^{m_o} \, b \coth ({}_t\mathcal{K}^{m_o} b) \right] - 1$$

$$\alpha = 2E_3 (a \times {}_t\Sigma_a^f)$$

where $E_3(x) = x^2 \int_x^\infty \frac{e^{-y}}{y^3} \, dy$

$$2 = \frac{1 + \alpha}{1 - \alpha} \, a \, {}_t\Sigma_a^f$$

$$\xi = \xi_1 \frac{a \, {}_t\Sigma_a^f}{b \, {}_t\Sigma_a^{m_o}} + \xi_2$$

If G = 1, 2, 3, or 4

Use cylindrical utilization subroutine with following assignments.

G	1,2, and 3	4
Ko	${}_t\mathcal{K}^{m_o}$	$\sqrt{{}_t\Sigma_a^f / {}_tD^f}$
Ro	b	a
Ki	$\sqrt{{}_t\Sigma_a^f / {}_tD^f}$	${}_t\mathcal{K}^{m_o}$
Ri	a	b
Di	${}_tD^f = (3\,{}_t\Sigma_{tr}^f)^{-1}$	${}_tD^{m_o}$
Σ_{ai}	${}_t\Sigma_a^f$	${}_t\Sigma_a^{m_o}$
Do	${}_tD^{m_o}$	${}_tD^f = (3\,{}_t\Sigma_{tr}^f)^{-1}$
Σ_{a_o}	${}_t\Sigma_a^{m_o}$	${}_t\Sigma_a^f$
Si	0	1
So	1	0

$$\xi' = \frac{Ri^2}{R_o^2} \frac{\Sigma_{ai}}{\Sigma_{a_o}} \left(\frac{1}{f_i} - 1\right)$$

for G = 1, 2, or 3 $\xi' \longrightarrow \xi$

for G = 4 $\frac{1}{\xi'} \longrightarrow \xi$

$$N = \frac{V^U}{\xi} + V^{m_o} + \frac{1}{2}\left(1 + \frac{1}{\xi}\right) V^{cl} + V^{so}$$

$${}_t\Sigma_a^o = \left[{}_t\Sigma_a^f \frac{V^U}{\xi} + {}_t\Sigma_a^{m_o} V^{m_o} + \frac{1}{2}\left(1 + \frac{1}{\xi}\right) {}_t\Sigma_a^{cl} V^{cl} + {}_{tr}\Sigma_a^{So} V^{So}\right] \frac{1}{N}$$

$${}_tf^o = \frac{\frac{V^U}{\xi}\left({}_t\Sigma_a^f - {}_t\Sigma_a^{fNU}\right)}{{}_t\Sigma_a^o \eta}$$

$${}_t\Sigma_{tr}^{al} = {}_t\sigma_{tr}^{al} \frac{.6023}{A^f} \rho f$$

$$ {}_t\Sigma_{tr}^{cl} = {}_t\sigma_{tr}^{cl} \frac{.6023}{A^{cl}} \rho^{cl} $$

$$ {}_t\Sigma_{tr}^{So} = {}_t\sigma_{tr}^{So} \frac{.6023}{A^{So}} \rho^{So} $$

$$ {}_t\Sigma_{tr}^{m_1} = {}_t\sigma_{tr}^{m_1} \frac{.6023}{A^{m_1}} \rho^{m_1} $$

$$ {}_t\Sigma_{tr}^{f} = \left[{}_t\sigma_{tr}^{U} \frac{.6023}{A^{f}} \rho^{f} + N^{al} \; {}_t\Sigma_{tr}^{al} \right] $$

$$ D^{o} = \frac{N}{3\left[{}_t\Sigma_{tr}^{f} \frac{V^{U}}{\xi} + {}_t\Sigma_{tr}^{So} V^{So} + {}_t\Sigma_{tr}^{m_o} V^{m_o} + \frac{1}{2} \; {}_t\Sigma_{tr}^{cl} V^{cl} \left(1 + \frac{1}{\xi}\right) \right]} $$

$$ {}_t\mathcal{K}^{o} = \sqrt{{}_t\Sigma_a^{o} / {}_tD^{o}} $$

$$ {}_t\Sigma_{tr}^{1} = {}_t\Sigma_{tr}^{m_1} (1 - V^{s_1}) + {}_t\sigma_{tr}^{s_1} \frac{.6023 \; \rho^{s_1}}{A^{s_1}} V^{s_1} $$

$$ {}_t\Sigma_a^{1} = {}_t\Sigma_a^{m_1} (1 - V^{s_1}) + {}_t\sigma_a^{s_1} \frac{.6023 \; \rho^{s_1}}{A^{s_1}} V^{s_1} $$

$$ {}_t\mathcal{K}_1 = \sqrt{3 \; {}_t\Sigma_a^{m_1} \; {}_t\Sigma_{tr}^{m_1}} $$

ASSIGNMENT OF CONSTANTS FOR CALCULATION OF ${}_tf^{1}$

G	0 and 1	2	3 and 4
$\mathcal{K}_o$	${}_t\mathcal{K}^{1}$	$\mathcal{K}^{o}$	Bypass
R_o	R^{1}	R^{o}	↓
$\mathcal{K}_i$	${}_t\mathcal{K}^{o}$	$\mathcal{K}^{1}$	↓
R_i	R^{o}	R^{1}	↓
D_i	${}_tD^{o}$	D^{1}	↓
Σ_{a_i}	${}_t\Sigma_a^{o}$	Σ_a^{1}	↓
D_o	${}_tD^{1}$	D^{o}	↓
Σ_{a_o}	${}_t\Sigma_a^{1}$	Σ_a^{o}	↓

ASSIGNMENT OF CONSTANTS FOR CALCULATION OF ${}_t f^1$ (cont.)

G	0 and 1	2	3 and 4
S_i	$\xi^{m_o}\, {}_r\sigma_s^{m_o}\, V^{m_o}\, \rho^{m_o}/A^{m_o}$	$\xi^{m_1}\, {}_r\sigma_s^{m_1}\, (1 - V^{s_1})\, \frac{\rho^{m_1}}{A^{m_1}}$	Bypass
S_o	$\xi^{m_1}\, {}_r\sigma_s^{m_1}\, (1 - V^{s_1})\, e^{m_1}/A^{m_1}$	$\xi^{m_o}\, {}_r\sigma_s^{m_o}\, V^{m_o}\, \frac{\rho^{m_o}}{A^{m_o}}$	$\Downarrow$

$$a_i = \left\{ \frac{S_o}{\Sigma_{a_o}} - \frac{S_i}{\Sigma_{a_i}} \right\} \left\{ \frac{1}{\frac{I_o(ii)}{I_1(ii)} - \frac{D_i \mathcal{K}_i}{D_o \mathcal{K}_o} \frac{K_1(00)\, I_o(io) + I_1(00)\, K_o(io)}{K_1(00)\, I_1(io) - I_1(00)\, K_1(io)}} \right\}$$

$$f_i = \frac{\frac{\Sigma\, a_i R i a_i}{\mathcal{K}_i} + S_i \frac{R_i^2}{\Sigma a_i}}{S_o (R_o^2 - R_i^2) + S_i R_i^2}$$

if G = 0 or 1

$$f^1 = f_i$$

if G = 2

$$f^1 = 1 - f_i$$

if G = 3 or 4

$$f^1 = 1$$

$${}_t f = {}_t f^1 \times {}_t f^o$$

$$\frac{\bar{\phi}_i}{\bar{\phi}_o} = \left\{ \frac{\frac{R_o^2}{R_i} \quad \Sigma_{a_o f_i}}{\Sigma_a^{\,i} \, (1 - f_i)} \right\} \quad \text{for } G = 0, 1, 2$$

$${}_t D^R = \frac{1 + \frac{\bar{\phi}_i}{\bar{\phi}_o} \frac{R_i^2}{R_o^2}}{\frac{1}{D_i} \frac{\bar{\phi}_i}{\bar{\phi}_o} \frac{R_i^2}{R_o^2} + \frac{1}{D_o}} \quad \text{for } G = 0, 1, 2;\ {}_t D^R = {}_t D^o \text{ for } G = 3 \text{ or } 4$$

$$ {}_t\Sigma_a^R = \frac{\Sigma_{a_i} \frac{\bar{\phi}_i}{\bar{\phi}_o} \frac{R_i^2}{R_o^2} + \Sigma_{a_o}}{1 + \frac{\bar{\phi}_i}{\bar{\phi}_o} \frac{R_i^2}{R_o^2}} \quad \text{for } G = 0, 1, 2; \; {}_t\Sigma_a^R = {}_t\Sigma_{a_o} \text{ for } G = 3 \text{ or } 4 $$

$$ {}_t\kappa^R = \sqrt{{}_t\Sigma_a^R / {}_tD^R} $$

$$ (L^R)^2 = \frac{{}_tD^R}{{}_t\Sigma_a^R} $$

$$ {}_r\Sigma_s^{al} = \frac{.6023 \; \rho^f}{A^f} \; {}_r\sigma_s^{al} $$

$$ {}_r\Sigma_s^{cl} = \frac{.6023 \; \rho^{cl}}{A^{cl}} \; {}_r\sigma_s^{cl} $$

$$ {}_r\Sigma_s^{So} = \frac{.6023 \; \rho^{So}}{A^{So}} \; {}_r\sigma_s^{S_o} $$

$$ {}_r\Sigma_s^{m_1} = \frac{.6023 \; \rho^{m_1}}{A^{m_1}} \; {}_r\sigma_s^{m_1} $$

$$ {}_r\Sigma_s^{m_o} = \frac{.6023 \; \rho^{m_o}}{A^{m_o}} \; {}_r\sigma_s^{m_o} $$

$$ {}_r\Sigma_a^{al} = \frac{.6023 \; \rho^f}{A^f} \times {}_r\sigma_a^{al} $$

$$ {}_r\Sigma_a^{m_1} = \frac{.6023 \; \rho^{m_1}}{A^{m_1}} \times \sigma_a^{m_1} $$

$$ {}_r\Sigma_a^{m_o} = \frac{.6023 \; \rho^{m_o}}{A^{m_o}} \; {}_r\sigma_a^{m_o} $$

$$ {}_r\Sigma_s^{s_1} = \frac{.6023 \; \rho^{s_1}}{A^{s_1}} \; \sigma_s^{s_1} $$

$$ {}_r\Sigma_a^{s_1} = \frac{.6023\ \rho^{s_1}}{A^{s_1}}\ {}_r\sigma_a^{s_1} $$

$$ \Sigma_s d = {}_r\Sigma_s^{m_o}\ d^{m_o} + {}_r\Sigma_s^{s_o}\ d^{s_o} + {}_r\Sigma_s^{cl}\ d^{cl} $$

$$ S_{eff} = \begin{cases} S_{sh}\left[1 - 2E_3\ (\sum \Sigma_s d)\right] + S_{us} & \text{if } C_D = 0 \\ S_{sh}\ (1 - C_D) + S_{us} & \text{if } C_D = 0 \end{cases} $$

$$ {}_r\sigma_a^U = \begin{cases} \left[C_1 + C_2\ \frac{S_{eff}}{M}\right]\ (1 - N^{25}) & \text{if } C_3 = 0 \\ \dfrac{C_1\ (1 - N^{25})}{C_2 + \frac{M}{S_{eff}}} & \text{if } C_3 = 0 \end{cases} $$

$$ {}_r\Sigma_a^U = {}_r\sigma_a^U\ \frac{.6023\ \rho^f}{A^f} $$

$$ {}_r\Sigma_a^o = \left\{\left[{}_r\Sigma_a^U + (\xi^{al}\ {}_r\Sigma_s^{al} + {}_r\Sigma_a^{al})\ N^{al}\right] V^U + V^{S_o}\ (\xi^{S_o}\ {}_r\Sigma_s^{S_o} + {}_r\Sigma_a^{S_o}) + V^{cl}\ (\xi^{cl}\ {}_r\Sigma_s^{cl} + {}_r\Sigma_a^d) + (\xi^{m_o}\ {}_r\Sigma_s^{m_o} + {}_r\Sigma_a^{m_o})\ V^{m_o}\right\} \frac{1}{{}_r\Delta_u} $$

$$ {}_rf^o = \frac{{}_r\Sigma_a^U\ V^U}{{}_r\Sigma_a^o\ {}_r\Delta^U} $$

$$ {}_r\Sigma_{tr}^{al} = \frac{.6023\ \rho^f}{A^f}\ {}_r\sigma_{tr}^{al} $$

$$ {}_r\Sigma_{tr}^{cl} = \frac{.6023\ \rho^{cl}}{A^{cl}}\ {}_r\sigma_{tr}^{cl} $$

$$ {}_r\Sigma_{tr}^{S_o} = \frac{.6023\ \rho^{S_o}}{A^{S_o}}\ {}_r\sigma_{tr}^{S_o} $$

$$ {}_r\Sigma_{tr}^{m_1} = \left[\frac{\rho^{m_1}}{A^{m_1}}\ {}_r\sigma_{tr}^{m_1}\ (1 - V^{s_1}) + \frac{\rho^{s_1}}{A^{s_1}}\ {}_r\sigma_{tr}^{s_1}\ V^{s_1}\right]\ .6023 $$

$$ {}_r\Sigma_{tr}^{m_o} = \frac{.6023\ \rho^{m_o}}{A^{m_o}}\ {}_r\sigma_{tr}^{m_o} $$

$$ {}_r\Sigma_{tr_a}^{s_1} = \frac{.6023\ \rho^{s_1}}{A^{s_i}}\ {}_r\sigma_{tr_a}^{s_1} $$

$$ {}_rD^o = \frac{1}{3}\left\{ {}_r\Sigma_{tr}^{m_o} V^{m_o} + {}_r\Sigma_{tr}^{c1} V^{c1} + {}_r\Sigma_{tr}^{s_o} V^{s_o} + \left[{}_r\sigma_{tr}^{U} \frac{.6023\ f}{A^f} + {}_r\Sigma_{tr}^{al} N^{al} \right] V^U \right\}^{-1} $$

$$ {}_r\Sigma_a^{m1} = \frac{(\xi^{m_1}\ {}_r\Sigma_s^{m_1} + {}_r\Sigma_a^{m_1})\ (1 - V^{s_1}) + (\xi^{s_1}\ {}_r\Sigma_s^{s_1} + {}_r\Sigma_a^{s_1})\ V^{s_1}}{{}_r\Delta_u} $$

$$ {}_r\mathcal{K}_o = \frac{{}_r\Sigma_a^{o}}{{}_rD^o} $$

$$ {}_r\mathcal{K}_1 = 3\ {}_r\Sigma_a^{m_1}\ {}_r\Sigma_{tr}^{m_1} $$

Use cylindrical utilization subroutine with following assignments.

G	0 and 1	2	3 and 4
$\mathcal{K}_i$	${}_r\mathcal{K}^o$	${}_r\mathcal{K}^1$	Bypass
R_i	R^o	R^1	
D_i	${}_rD^o$	${}_rD^1$	
Σ_{a_i}	${}_r\Sigma_a^o$	${}_r\Sigma_a^1$	
$\mathcal{K}_o$	${}_r\mathcal{K}^1$	${}_r\mathcal{K}^o$	
R_o	R^1	R^o	
D_o	${}_rD^1$	${}_rD^o$	
Σ_{a_o}	${}_r\Sigma_a^1$	${}_r\Sigma_a^o$	
S_i	$\xi^{m_o}\ {}_r\Sigma_s^{m_o}\ \frac{\rho^{m_o}}{A^{m_o}}\ V^{m_o}$	$\xi^{m_1}\ {}_r\Sigma_s^{m_1}\ \frac{\rho^{m_1}}{A^{m_1}}\ (1 - V^{s_1})$	
S_o	$\xi^{m_1}\ {}_r\Sigma_s^{m_1}\ \frac{\rho^{m_1}}{A^{m_1}}\ (1 - V^{s_1})$	$\xi^{m_o}\ {}_r\Sigma_s^{m_o}\ \frac{\rho^{m_o}}{A^{m_o}}\ V^{m_o}$	
	${}_rf^1 = f_i$	${}_rf^1 = 1 - f_i$	${}_rf^1 = 1$

$$r^f = r^f_o \times r^f_1$$

$$p = \exp\left[-\frac{r^f}{1 - r^f}\right]$$

$$k_\infty = \eta \epsilon_t f\ p$$

APPENDIX E

REVIEW OF HEAVY WATER DESIGNS

The purpose of this appendix is to summarize briefly the published documents dealing with work by Argonne National Laboratory on boiling heavy water reactors and by the Chalk River Project on pressurized heavy water reactors. These two organizations have given intensive study to the two respective types of heavy water reactors. In addition, the Du Pont Company, under contract with the U. S. AEC, is designing a heavy water pressurized reactor. Little has been published to date regarding the Du Pont project. In preparing this present report, the Du Pont group kindly supplied us with information on equipment, fuel element design, and heavy water losses. It was our impression that the Du Pont reactor design would draw heavily on Savannah River technology with respect to equipment and fuel elements, although consideration was being given to both pressurized-tube and pressurized-shell designs.

Boiling Heavy Water Reactors (Argonne National Laboratory)

A number of heavy water reactors operating on the direct boiling cycle have been designed by the Argonne group. Several designs were presented at the Geneva Conference, and recently detailed plans have been formulated to operate the EBWR with heavy water.

Geneva Conference Design[1]

The paper presented by an Argonne group at the Geneva Conference provides an excellent description of the physics, engineering design, and economics of heavy water reactors. A reactor size of 1,000 thermal megawatts (248 net electrical megawatts) was described in detail, the principal features of which are:

---

1 H. P. Iskenderian, et al, Geneva Conference Paper, P/495, Vol. 3 (1955)

Core	
Diameter (ft)	12
Height (ft)	12
Reflector thickness (ft)	1.25
Pressure Vessel ID (ft)	15.2
Fuel	
Type	Natural uranium
Total weight (short tons)	43.4
Initial conversion ratio	0.901
Number of plates	9
Plate thickness (in.)	0.15
Cladding	Zirconium
Cladding thickness (in.)	0.02
Lattice spacing (in.)	8
Shroud diameter (in.)	6
Number of fuel tubes	295
Average exposure level (MWD/short ton)	10,000
Heat Transfer	
Core recirculation rate (forced) gpm	75,000
Average coolant density (g/cc)	0.66
Reactor steam pressure (psia)	600
Reactor steam temperature (°F)	486
Average moderator temperature (°F)	200
Exit steam voids (vol. %)	80
Power density (MW/ft of fuel assembly)	0.28
Maximum heat flux (Btu/hr-sq ft)	400,000
Average heat flux (Btu/hr-sq ft)	160,000
Heavy Water	
Inventory in reactor (short tons)	100
Inventory in power plant and reserve (short tons)	20
Losses (% of inventory per year)	5

Designs were also summarized in the paper for a reactor size of 250 MW of heat and for a comparative light water design.

Certain of the principal problems of heavy water reactors were discussed. It was pointed out that a pressurized type of heavy water reactor would require a large pressure vessel at 2,000 psi and that this was very difficult to fabricate. Also, fuel was to be charged and discharged through ports in the top of the vessel and a welded head employed on the pressure vessel, since it was felt that bolted, leak-tight heads of such large diameter would be difficult to procure.

The safety aspects of heavy water reactors were emphasized: "The small quantity of uranium and low absorption cross section of the moderator account for a prompt neutron lifetime more than 10 times as long in a D_2O reactor as in the H_2O type. This is a very important factor from the safety standpoint inasmuch as short period excursions need not be considered in D_2O reactors Since a significant part of the capital expenditure for a nuclear power plant is usually associated with safety provisions, the relative safety of a D_2O reactor is expected to have an important bearing on the cost of electricity."

Operation of Heavy Water EBWR[2]

Recently studies have been undertaken on the operation of the EBWR with heavy water In this core size, some enrichment of the fuel is necessary A plate-type fuel element is proposed, and three different core designs are presented It was assumed that an average heat flux of 100,000 Btu/hr-sq ft was appropriate on all designs with natural circulation. This report contains a rather thorough analysis of excursions caused by either a rapid rise in reactivity or a large but slow increase in reactivity. It was concluded that the present control rods of EBWR will be more than adequate for the D_2O loading.

Pressurized Heavy Water Reactors (Chalk River Project)

Atomic Energy of Canada, Limited, has for several years conducted a vigorous and imaginative program in the design of heavy water power reactors. The position of nuclear reactors in the Canadian power complex has been carefully examined, and the extent of cost reduction in nuclear power necessary for it to compete with conventional power has been analyzed.

Canadian power reactor designs are based on the use of natural uranium and heavy water, both of which are produced in Canada. Recently emphasis has been placed on large power reactors designed to minimize neutron losses and to obtain long exposure levels. Canadian efforts along this line are to be carried forward by construction of an NPD (Nuclear Power Demonstration) reactor Rather complete details of this reactor design have been published, but recently the decision has been made to revise the published design

---

[2] H. P. Iskenderian, "20-MW D_2O Moderated Experimental Boiling Water Reactor Design Studies," ANL 5685, February, 1957.

Early NPD Design[3,4,5]

The NPD was designed to be a pressurized-shell non-boiling power reactor of 20 electrical megawatts output, intended as a power demonstration reactor. Its unique feature was the absence of control rods, control being carried out by varying the level of the D_2O moderator. Other features were:

Reactor	
Moderator pressure (psi)	1200
Coolant pressure (psi)	950
Vessel height x diameter (ft)	30 x 12
Wall thickness (in.)	5
Containment vessel	None (below ground)
Fuel	
Type	Natural uranium oxide
Cladding	Zircaloy
Fuel tube diameter (in)	0.65
Fuel tubes/channel	19
Coolant channel OD (in.)	3.25
length of coolant channel (ft)	8.25
Number of coolant channels	120
Total UO_2 in core (metric tons)	8
Total UO_2 added/year (metric tons)	12
Heat Transfer	
Coolant flow (gpm)	12,000
Reactor exit temperature (°F)	530
Steam pressure (saturated), psia	425
Steam flow (lb/hr)	300,000
Maximum heat flux (Btu/hr-sq ft)	300,000
D_2O Purification Plant	
Flow (gpm)	5,000

Proposed Modifications to NPD

As a result of their studies, the Chalk River group has determined that by frequent partial charge-discharges of horizontal fuel tubes, adjacent tubes being loaded from opposite ends, sufficient reactivity can be maintained with

---

3 "Canadian Atomic Energy Activities," Report to the United Nations, 1957
4 H. A Smith, "The Preliminary Design for NPD," AECL 240 (October, 1955)
5 Bureau of National Affairs - Description of NPD - No 84, p 449.895, 1957

natural uranium oxide to permit exposure levels of 10,000 MWD/metric ton.[6,7] At this exposure level the fuel cycle cost is very low, and Dr. W. B. Lewis has presented data on the power-generating cost of a 200 EMW reactor operating on this principle.[7]

Item	Rating or Quantity	Capital Investment ($ x 10^6)	Annual Interest Charge (%)	Operating Cost (mills/kwh)
Turbogenerator plant	200 EMW	16	8.5	0.97
Reactor, auxiliaries, and building	800 TMW	30	8.5	1.82
Inventory charges:				
Heavy water	3.2×10^5 lb at $28/lb	9	6	0.39
Uranium	110 metric tons at $40/kg	4	4	0.11
Non-nuclear parts	$30/kg	3	4	0.09
Fuel Burn-up	25.8 ton/hr at 10,000 MWD/metric ton			1.17
Operating costs, including D_2O loss at 1 lb/hr				0.72
		62		5.27

Presumably on the basis of such data, it has been decided to attempt to modify the NPD to a pressurized horizontal tube design with provisions for charging and discharging while operating.[8] The elimination of control rods is apparently still thought to be possible in the new design.[7]

The figure of 5.27 mills/kwh is lower than would be predicted for a 200 EMW plant on the basis of assumptions employed in this present Size-Up report for the following reasons:

1) The plant cost of $230/kw estimated by Lewis should be compared with $302/kw used here for the 250 EMW pressurized design.
2) The annual "interest charges" given by Lewis are roughly half those appropriate on a U. S. private utility basis. This is a major difference.

---

6 W. B. Lewis, "Low Cost Fuelling Without Recycling," AECL 382, December 10, 1956.
7 W. B. Lewis, Talk at National Industrial Conference Board, Fifth Atomic Energy Conference, Philadelphia, March 15, 1957, AECL 417. See also Nucleonics 15, No. 6, p. 71, June, 1957.
8 W. B. Lewis, Private Communication, June, 1957.

3) The heavy water loss of 1 lb/hr is roughly one-quarter that assumed in Section III.

4) The Canadians assume fuel-cycle costs for fabrication and conversion of only $30/kgm using zirconium elements. Although they have studied this problem in some detail,[9] such costs are less than half those believed attainable in the near future.

As shown in Section III, the 250 EMW plant of this report is estimated to have a power cost of 10.9 mills/kwh rather than the 5.27 mills/kwh given by Lewis. It should be stated that the Canadian estimates are predicated on a longer-range forecast than the Size-up designs, however.

---

[9] H. K. Rae, "Fuel Processing and Recycling for Natural Uranium Power Reactors," Paper No. 57-NESC-102, 2nd Nuclear Engineering & Science Conference, Philadelphia, March, 1957.

CONSOLIDATED WESTERN STEEL

DIVISION UNITED STATES STEEL CORPORATION

APPENDIX F

PRESSURE VESSEL STUDY

PREPARED FOR

ATOMIC ENERGY DIVISION
AMERICAN RADIATOR
AND
STANDARD SANITARY CORPORATION

CONTRACT NO. AT-(04)-3-109

MARCH, 1957

SUBMITTED BY R. D. Handers
REPORTS & PROCEDURES GROUP

APPROVED BY D. J. Bailey
ENGINEER-IN-CHARGE, C.W.S.D.

APPROVED BY _____
AM. RAD. & STD. SAN. CORP.

TABLE OF CONTENTS

Title Page	1
Table of Contents	2
List of Illustrations	4
Summary	5
Introduction	6
	7
Discussion	
1.0 General	
Index	8
1.1 Materials	9
1.2 Type of Construction	13
1.3 Maximum Vessel Fabrication Dimensions	14
1.4 Field Fabrication Problems	15
2.0 Vessel Design	
Index	18
2.1 Design Tabulation	19
2.2 Design Analysis	19
3.0 Specifications-General Provision	
Index	32
3.1 General	33
3.2 Scope of Work	33
3.3 General Specifications	33
3.4 Inspection	37
3.5 Testing	38
3.6 Instruction Books-Equipment Catalogs	39
3.7 Transportation	39
3.8 Erection	40
4.0 Specifications-Welding	
Index	42
4.1 Solid Stainless Wall Vessels	43
4.2 Stainless Clad Steel Wall Vessels	45
4.3 Steel Wall Containment Vessels	50

TABLE OF CONTENTS

5.0 Head Closures
Index 54
5.1 General 55
5.2 Closure Limitations 55
5.3 Closure Design 61
5.4 Economic Analysis of Closures 63

6.0 Cost Data 66
Index 67
6.1 Reactor Vessels 67
6.2 Containment Vessels 68
6.3 Cladding 69
6.4 Tabulation of Cost Data 70
6.5 Head Closures 70
6.6 Fabrication

Appendix A - Interpretation of Code Data 72

LIST OF ILLUSTRATIONS AND FIGURES

Detail 2.13 - Boiling Water Vessel Outline 20
Table 2.13 - Boiling Water Vessel Data 21
Detail 2.14 - Pressurized Water Vessel Outline 22
Table 2.14 - Pressurized Water Vessel Outline 23
Figure A - 15' - 3" dia., 1000 psi, Boiling Water Vessel 24
Figure B - 11' - 6" dia., 600 psi, Boiling Water Vessel 26
Figure C - 13' -9½" dia., 1800 psi, Boiling Water Vessel 28
Detail 4.239a - Typical Weld Bead Detail 48
Detail 4.33 - Typical Weld Bead Detail 52
Figure D - Loose Ring Flange Head Closure 56
Figure E - Flanged Head Type Closure with Seal Weld 57
Figure F - Welded Head Closure 58
Figure G - Head Hold-down and Bridge man Type Closure 59
Figure H - Typical Seal 62
Table 6.4 - Tabulation of Cost Data 69

SUMMARY

This report covers, briefly, data concerned with the design, fabrication, transportation, and erection of containment, boiling water, and pressurized water vessels. A survey of pertinent factors concerning plate thickness, limiting fabrication dimensions, fabrication methods, and field fabrication problems, is presented and discussed.

An analysis of vessel design, together with vessel dimensions, weights, costs, and specifications, is included. A discussion of representative designs for removable heads is presented, taking into account such variables as shape, thickness, seals and materials, together with fabrication sources, and code and inspection problems.

Following this report as Appendix A, are interpretations of the ASME Boiler and Pressure Vessel Code, as approved by the ASME Council, September 6, 1956, which established the basic limiting factors for nuclear vessels of this nature. It has been determined that these vessels come under the provisions in the Code for vessels containing lethal substances. The provisions of the Code do not limit vessel wall thickness, providing other sections of the Code are met.

The thermal problems arising from internal heat generation due to neutron bombardment have not been investigated at the oral direction of the client.

INTRODUCTION

By letters to Consolidated Western Steel Division, United States Steel, dated December 27, 1956, and January 5, 1957, the Atomic Energy Division of American Radiator and Standard Sanitary Corporation requested Consolidated to conduct a study covering the design of pressure vessels for pressurized water, and boiling water reactors. This study American expects to utilize as partial fulfillment of a contract held by them with the Atomic Energy Commission for the study of heavy-water, natural-uranium power reactors.

Subsequent to the above letters, Consolidated has been informed by American that a contract ultimately to be executed with Consolidated would be given the Air Force designation AT-(04)-3-109.

A preliminary survey report on this subject was prepared, and delivered to American in the latter part of January, 1957. The accompanying report, more definitive and comprehensive, is expected to complete the requirements of this contract.

The ensuing report is based upon vessels designed under ASME Code requirements as requested by American Standard and Sanitary Corp.

It is, however, the considered opinion of CWSD Engineering Department that non-Code vessels may be designed and constructed with thinner wall sections, still maintaining adequate safety factors.

This latter approach may prove to be the more economical method of fabrication for the large heavy vessels required for heavy water moderated reactors.

DISCUSSION

SECTION I

GENERAL

INDEX
SECTION I
GENERAL

1.1 Materials
1.11 Reactor Vessels 9
1.111 General 9
1.112 Wall Thickness 9
1.113 Alternate Cladding Methods 10
1.114 Welding Problems 11
1.115 Conclusions 11
1.12 Containment Vessels
1.121 General 12
1.122 Code Conformance 12

1.2 Type of Construction
1.21 Forged Ring Construction 13
1.211 General 13
1.212 Carbon or Low Alloy Steel 13
1.213 Stainless Steel 13
1.214 Illustrative Example-Forged Ring Construction 13
1.215 Conclusions 14

1.3 Maximum Vessel Fabricating Dimensions
1.31 Shop Fabrication 14
1.311 Size Limitations-Transportation 14
1.312 Weight Limitations-Transportation 14
1.32 Field Fabrication 15
1.321 Size Limitations-Code 15

1.4 Field Fabrication Problems
1.41 General 15
1.42 Stress Relieving 15
1.421 General 15
1.422 Field Furnace 16
1.423 Local Stress Relieving 16
1.43 Field Welding 16
1.431 General 16
1.432 Costs 16
1.44 Conclusions 16

1.0 GENERAL

1.1 MATERIALS

1.11 Reactor Vessels

1.111 General

1.1111 Solid Stainless Steel

Evaluation of solid stainless steel reactor vessels in this report has been based on the use of Type SA 167, Grade 11 steel, because the present Code restrictions provide the highest allowable stainless steel stress for this material. It has not been possible to ascertain definitely that this type of steel will be used in constructing these vessels. Further study will be necessary to establish the most suitable type of material to satisfy optimum requirements of welding and forging. Such a study may indicate that materials not presently acceptable or listed under the ASME Boiler and Pressure Vessel Code would be more suitable than those now listed.

1.1112 Wall Section

The investigation preceding this report indicates that vessels made of either solid stainless steel or of clad material are practical, providing that those stainless steels acceptable for pressure vessel construction by the Code are also acceptable to the client when the effects of radiation are considered.

1.1113 Radiation

Existing information indicates that the effect of radiation on most materials acceptable under the ASME Code is not definitively known.

1.112 Wall Thickness

1.1121 Maximum-Lukens Method

Either solid stainless steel or clad construction is feasible up to the maximum wall thickness for which commercial clad plate is normally available. Using the Lukens Method, this present maximum is approximately 8-5/8".

1.1122 Maximum-Alternate Claddings

Greater thicknesses than available by the Lukens method are feasible construction-wise if one or more of the following alternate methods of cladding are acceptable considering the environment of the vessel.

1.113 Alternate Cladding Methods

1.1131 Alternate methods of cladding, in addition to the Lukens Method, are the Double Shell Method, the Plating Method, and the Stitch Method, briefly described as follows:

1.1132 Double Shell Method

This method comprises a complete interior leak-proof shell of stainless steel set into an outer carbon steel shell with intermediate areas vented. The outer carbon steel shell will develop the entire strength required to contain the involved pressures. The inner shell will be leak-proof and will provide the required corrosion resistance. The Double Shell Method, however, since the effects of internal heat generation is unknown, is not considered desirable.

1.1133 Plating Method

This method comprises a chrome or nickel plate, approximately .007 to .010" thick, applied after the vessel is fabricated, stress relieved and ready for service. This plating is not recommended because of its fragility and its inability to withstand blows or abrasions.

1.1134 Stitching Method

This method comprises fabricating stainless steel sectionally to match the interior contours of the vessel. Stitching each section in place separately by automatic welding techniques produces welds on approximately 2" centers. Following the stitching of the separate sections, stainless steel seal welding will be produced between each adjacent section to make the final shell.

1.1135 Continuous Stainless Steel Overlay Method

This method comprises laying of a continuous weld metal bead of appropriate specification over the carbon or low alloy steel from which the vessel is fabricated.

1.114 Welding Problems

1.1141 Use of the above mentioned cladding methods introduces severe welding problems because of the bi-metallic nature of the vessel.

1.1142 Lukens Method

Lukens Processing Cladding requires that the weld be made from the clad side starting considerably below the cladding thickness with stainless steel so that dilution of the stainless steel below the carbon surface is zero. Special welding techniques and procedures will be required to successfully fabricate a vessel in this manner and maintain the clad integrity.

1.1143 Double Shell Method

This method utilizes a separate stainless vessel constructed inside the carbon steel vessel to achieve the necessary corrosion resistance, etc. The cost of a finished vessel of this nature will be quite high since the labor will be essentially doubled, and a very accurate fit must be achieved to guarantee that the inner vessel, which is not designed as a pressure vessel, will not be over-stressed.

1.1144 Stitching Method

In vessels where the Lukens Method of cladding is not possible or practical, it is felt that the Stitching Method described above is most practical.

1.115 Conclusions

1.1151 A relative economic study indicates that the most economical construction, where feasible, is a clad vessel using the Lukens Process.

1.1152 The second most economical construction would be the solid stainless steel vessel.

1.1153 The third most economical vessel would be one constructed by the Stitching Method. That method appears to be the most economical process in vessels having a greater wall thickness than can be produced using the Lukens Process.

1.1152 The second most economical construction would be the solid stainless steel vessel.

1.1153 The third most economical vessel would be one constructed by the Stitching Method. This method appears to be the most economical process in vessels having a greater wall thickness than can be produced using the Lukens Process.

1.12 Containment Vessels

1.121 General

Evaluation of containment vessels in this report has been based on the use of material qualified under Specification SA 300 by the ASME Boiler and Pressure Vessel Code.

1.122 Code Conformance-Thickness

The ASME Code for Unfired Pressure Vessels establishes the following permissible wall thicknesses for a low alloy steel which qualifies under SA-300, using a stress of 13,750 psi, and with internal pressure of 30 psig:

Stress Relief not required	- 1.240 inches max.
Preheat to 200° F required	- 1.240-1.490 inches

Since stress relief of these large containment vessels is impractical, the above are the practical design limits.

1.123 Code Conformance-Diameter

The field fabrication of vessels is limited by the ASME Code for Unfired Pressure Vessels, which establishes the following permissible diameters for vessels of low alloy steel, qualifying under SA-300, using a stress of 13,750 psi, and with internal pressure of 30 psig:

	Cylinder	Sphere
Stress Relief not required	90.3'	151.67'
Preheat to 200° F required	90.3'-108.2'	151.67'-181.67'

1.124 Stress Relief

Since stress relief of these large containment vessels is impractical, the above are the practical design limits.

1.2 TYPE OF CONSTRUCTION

1.21 Forged Ring Construction

1.211 General

In addition to the more usual methods of construction of vessels described elsewhere in this report, consideration should be given the "Forged-Ring" type of construction.

1.212 Carbon or Low-Alloy Steel

1.2121 Maximum Sizes. Existing facilities permit the fabrication of vessels from low-carbon or low-alloy steel by ring-forging techniques to 182" (15.17') finished O.D. maximum and with practical limits of wall thickness, 15"-17". Can lengths will vary from 2' to 5', depending on diameter and wall thickness.

It is felt that vessels up to 192" (16') I.D. by 17" wall can be fabricated by use of a forging process; however, it is believed that there are not now any available facilities for such fabrication above 182" O.D.

1.2122 Cost. Approximate costs for the carbon or low-alloy steel forgings discussed above appear to be from $1.10 to $1.50 per pound.

Specifically, for a ring 13.8' I.D. by 8" wall by 55" long, the price would be $1.23 per pound.

1.2123 Conclusions. It appears that the price per pound decreases slightly with increased wall thickness for the same O.D.

1.213 Stainless Steel

1.2131 Maximum Size. Forgeability considerations limit the size of stainless steel forged rings to a maximum of 144" (12.0') finished O.D. by approximately 15" wall thickness, in 27" can lengths.

1.214 Illustrative Example - Forged Ring Construction

1.2141 Design Criteria. The assumption is made of a vessel fabricated with the forged ring technique, 182" finished O.D. x 9.75" wall x 34.3' in height, and operated under code provisions at 2000 psig.

1.2142 Cladding. This vessel could be fabricated from SA302 steel, and clad by either of two methods:

a. By using the 1/4" SA304 stainless steel plate stitched on 2" centers, or
b. By laying on a continuous weld beam approximately 1/4" thick.

1.2143 Weight. The gross weight of such a vessel would be approximately 1,300,000 pounds, and net weight would be approximately 850,000 pounds.

1.2144 Cost. It would cost approximately $4,000,000 to fabricate and install in the field, of which approximately $2,200,000 would be required for shop work and $1,800,000 for field work. See data on Vessel D_R in Table 5.4.

1.215 Conclusions

1.2151 Fabrication of plate vessels appears to be more economical than fabrication of forged ring vessels of the same wall thickness and diameter.

1.2152 The experience of Consolidated indicates that forged ring construction for the bare vessel costs approximately 40% more than clad construction of identical vessels.

1.3 MAXIMUM VESSEL FABRICATING DIMENSIONS

1.31 Shop Fabrication

1.311 Size Limitations-Transportation

1.3111 A practical limitation to vessel sizes in shop fabrication is the possibility of shipment. The American Association of Railroads advises that at the present time, vessels up to 11'-2" in diameter by 50' in length can be shipped without special routing.

1.3112 By special selection of route, vessels up to 13'-6" in diameter by 100' in length may be shipped.

1.312 Weight Limitations-Transportation

1.3121 Another limitation that must be taken into account has to do with weight; 70 tons of cargo may be shipped per car without special permit, but with a special permit, routing and cars, as much as 250 tons may be shipped per car.

1.3122 However, end destinations of individual vessels must be investigated before fabrication to assure that special routings will be applicable.

1.32 Field Fabrication

1.321 Size Limitations-Code

1.3211 The field fabrication of vessels is limited by the ASME Code for Unfired Pressure Vessels, which establishes the following permissible diameters for vessels of low alloy steel, qualifying under SA-300, using a stress of 13,750 psi, and with internal pressure of 30 psig:

	Cylinder	Sphere
Stress Relief not required	90.3'	151.67'
Preheat to 200° F required	90.3'-108.2'	151.67'-181.67'

1.4 FIELD FABRICATION AND ERECTION PROBLEMS

1.41 General

1.411 Field fabrication and erection of large pressure vessels, either of plate or forged ring construction, involves many special problems not necessarily a part of shop fabrication. Included among these field problems are the additional costs and labors of field stress relieving, erection and joining.

1.412 Primarily, these additional problems relate to handling the sizes and weights of pieces required rather than problems of technique. Techniques for such fabrication or erection are well established.

1.42 Stress Relieving

1.421 General

1.4211 When any vessel becomes too large for shop fabrication, or to ship in one piece, field stress relieving is necessary to meet Code requirements, if wall is over 1-1/2" thick.

1.4211 Field stress relieving presents new, but not insurmountable problems, not present when shop fabrication is feasible. Techniques, procedures and facilities for solution of these problems are presently well established and a matter of inconvenience rather than complexity.

1.422 Field Furnace

1.4221 Preferably, field stress relieving is accomplished by construction of a portable field stress relieving furnace, which method seems desirable up to a diameter of at least 20'.

1.423 Local Stress Relieving

1.4231 The Code will accept, on large vessels, local stress relieving of round seam welds in closed areas of not less than 4 times the thickness of metal, either side of weld. Because of technical difficulties, this method should be avoided, if possible.

1.4232 It has also been proven practical to stress relieve large field fabricated vessels by the use of a heated internal atmosphere. Obviously, this method necessitates the erection and operation of large heating units, which substantially increases the cost of the finished product.

1.43 Field Welding

1.431 General

1.4311 Welding problems appearing during field fabrication of such vessels are due to the quantity of weld metal that must be deposited in the field.

1.4312 Here again, techniques and procedures for this work have been well established through long usage.

1.432 Costs

1.4321 Field welding is, of course, more costly, more time-consuming, and more difficult than shop welding since facilities are not as readily at hand, and working conditions are more difficult than working conditions in the shop.

1.44 Conclusions

1.441 Field fabrication involves more difficult handling and storage problems than shop fabrication, and requires an augmented field staff which is unable to perform its duties as efficiently as with shop fabrication.

1.442 Field joining of plates involves welding under adverse circumstances, and does not permit as great speed or efficiency as does shop welding.

DISCUSSION

SECTION II

VESSEL DESIGN

INDEX
SECTION II
VESSEL DESIGN

2.1 Design Tabulation
- 2.11 General 19
- 2.12 Containment Vessels 19
- 2.13 Boiling Water Vessels Tabulation 21
- 2.14 Pressurized Water Vessels Tabulation 23

2.2 Design Analysis
- 2.21 Code Conformance 19
- 2.22 Material 25
  - 2.221 Reactor Vessels 25
  - 2.222 Containment Vessels 25
- 2.23 Pressures 25
- 2.24 Temperatures 25
- 2.25 Fabrication 25
  - 2.251 Weld Design 25
  - 2.252 Joint Inspection 25
  - 2.253 Joint Efficiency 25
- 2.26 Internal Water Pressure 25
- 2.27 Design Formulae 27
  - 2.271 Reactor Vessels 27
  - 2.272 Containment Vessels 27

2.0 VESSEL DESIGN

2.1 DESIGN TABULATION

2.11 General

2.111 On pages 21 and 23 following, approximate dimensional and weight figures and estimated costs are tabulated for various boiling water and pressurized water reactor vessels.

2.112 Weights listed are net weights, and extrapolation of these figures to other vessels should be on the basis of these weights.

2.113 These tabulations are based upon data furnished Consolidated by American.

2.12 Containment Vessels

2.121 Studies made by Consolidated indicate that spherical containment vessels, of the sizes tabulated in this report, appear to be more economical than equivalent volume cylindrical vessels.

2.122 For this reason, data has been computed and is tabulated for both cylindrical and spherical vessels.

2.13 Boiling Water Vessels Tabulation

2.131 This tabulation follows as page 21.

2.14 Pressurized Water Vessels Tabulation

2.141 This tabulation follows as page 23.

2.2 DESIGN ANALYSIS

2.21 Code Conformance

2.211 Design of these vessels shall be in conformance with Section I, ASME Boiler and Pressure Vessel Code, and subsequent interpretations of this Code as approved by the ASME Council, September 6, 1956, included herein as Appendix A.

2.212 Design is also in compliance with Section VIII of the same Code, paragraphs

U1-C-2	UG-23	UG-36 to 53	UCS-6
UG-5	UG-27	UW-12	UCS-15
UG-16	UG-32	U-W-16	UCS-16
			UCS-23

and such other paragraphs as may be deemed appropriate by Consolidated.

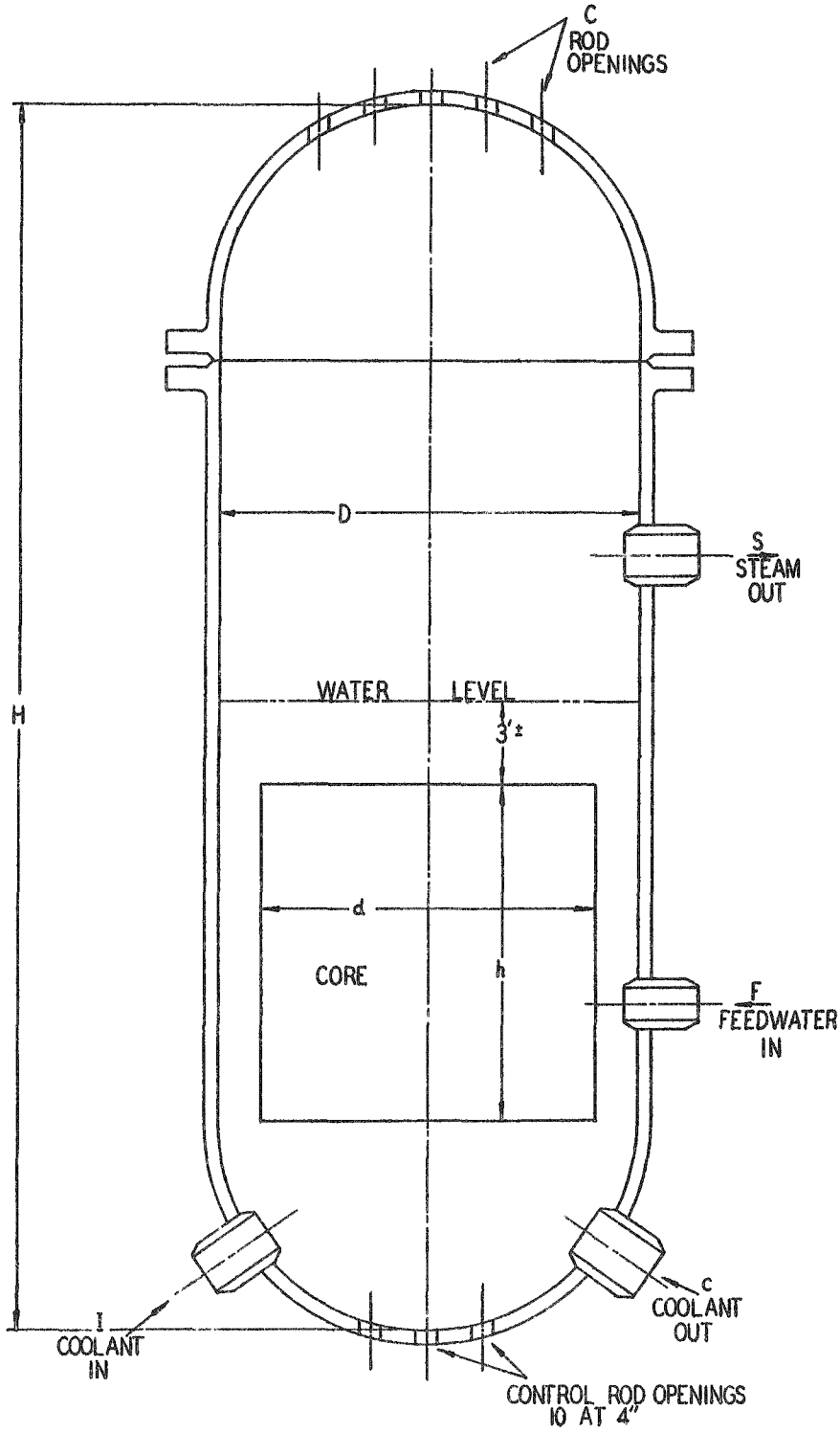

BOILING WATER
REACTOR VESSELS

TABLE 2.13

BOILING WATER VESSELS

REACTOR VESSEL

OPER. PRESS.	OPER. TEMP.	DIAM.	HT.	ACTIVE DIAM. d	CORE HT. h	NOZZLE APERTURES S NO.	S SIZE	O NO.	O SIZE	I NO.	I SIZE	F NO.	F SIZE	ROD OPENINGS C NO.	C SIZE	USING SA-302 THICK t	WT w	COST EST. (CLAD)
PSI	°F.	FT.	FT.	FT.	FT.		IN.		IN.		IN.		IN.		IN.	IN.	TONS	DOLLARS
600	486															3.00	142	
800	518															4.00	190	
1000	545	15.30	45.00	12.0	12.0	1	18	3	22	3	18	1	4	20	8	5.00	239	1,505,700
1200	567															6.00	288	
1400	587															7.00	340	
600	486															2.75	108	
800	518															4.00	148	
1000	545	14.40	42.00	11.0	11.0	1	16	3	20	3	16	1	12	18	8	5.00	186	
1200	567															6.00	222	
1400	587															6.50	260	
600	486															2.50	88	SEE TABLE 6.4
800	518															3.50	116	
1000	545	13.25	36.25	10.0	10.0	1	13	3	18.5	3	14	1	10	16	8	4.50	149	
1200	567															5.50	182	
1400	587															6.50	215	
600	486															2.50	71	
800	518															3.50	99	
1000	545	12.25	33.25	9.0	9.0	1	10	3	17.0	3	12	1	8	14	8	4.00	115	
1200	567															5.00	142	
1400	587															6.00	170	
600	486															2.25	73	650,520
800	518															3.00	88	
1000	545	11.50	33.00	8.0	8.0	1	6	3	16	3	10	1	5	12	8	4.00	117	
1200	567															4.50	131	
1400	587															5.50	160	

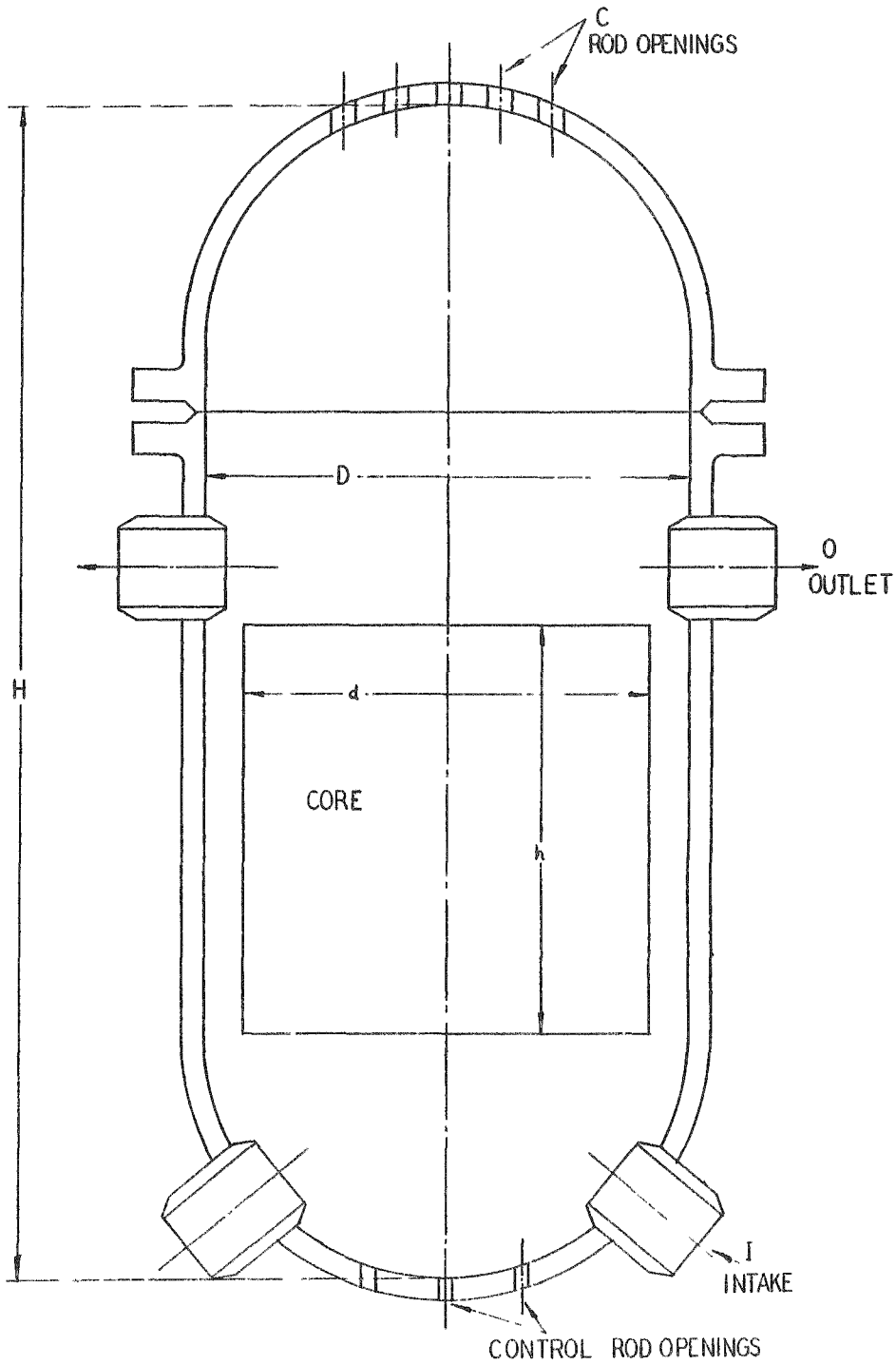

PRESSURIZED WATER
REACTOR VESSELS

TABLE 2.14

PRESSURIZED WATER VESSELS

REACTOR VESSEL

OPER. PRESS.	OPER. TEMP.	DIAM.	HT.	ACTIVE DIAM. d	CORE HT. h	NOZZLE APERTURES S NO.	S SIZE	O NO.	O SIZE	I NO.	I SIZE	F NO.	F SIZE	ROD OPENINGS C NO.	C SIZE	USING SA-302 THICK t	USING SA-302 WT w	COST EST. (CLAD)
PSI	F	FT.	FT.	FT.	FT.		IN.		IN.		IN.		IN.		IN.	IN.	TONS	DOLLARS
1400	587															6.00	189	
1600	605	12.6	30.2	10 6	10 6			4	24	4	24			20	8	6.50	203	
1800	621															7.50	237	
2000	636															8.50	268	
1800	621	13.8	34.4					4	24	4	24			42	8	8.40	330	2,475,660
1400	587															7.00	264	
1600	605	13.4	33.4	10.0	10.0			4	20	4	20			36	8	7.80	292	
1800	621															8.40	325	
2000	636															9.50	385	
1400	587															5.00	103	SEE TABLE 6.4
1600	605	10.0	23.0	6.5	6.5			4	18	4	18			30	8	5.50	114	
1800	621															6.00	124	
2000	636															7.00	145	
1400	587															4.00	58	
1600	605	8 4	21 8	6.4	6.4			4	16	4	16			25	8	4.50	66	
1800	621															5.00	73	
2000	636															6.00	88	

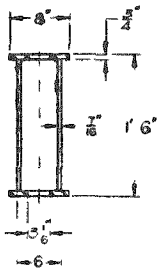

SECTION C-C
RETAINER HEAD
3" DIA HOLD-DOWN BOLTS
OMITTED FOR CLARITY

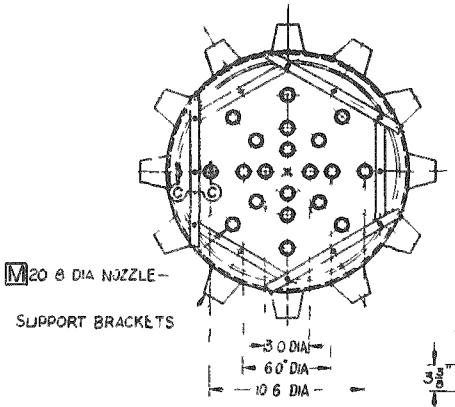

PLAN-VESSEL

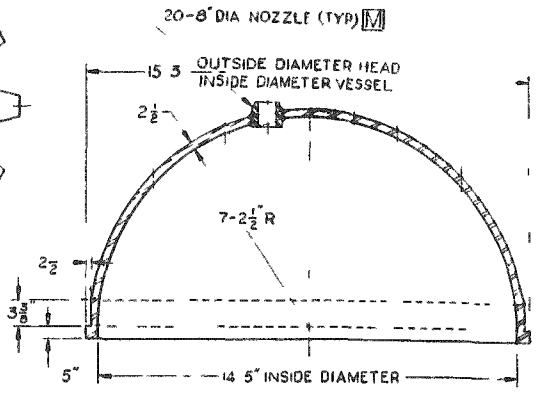

SECTION A-A
CROSS SECTION OF HEAD
OMITTING HOLD-DOWN BRACKETS

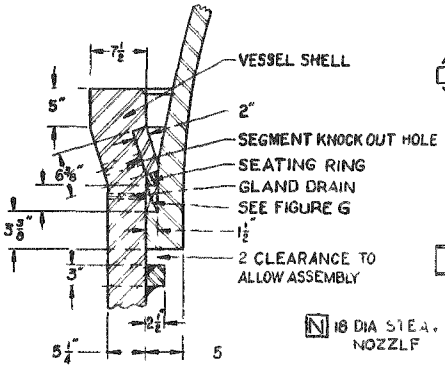

DETAIL D
HEAD CLOSURE

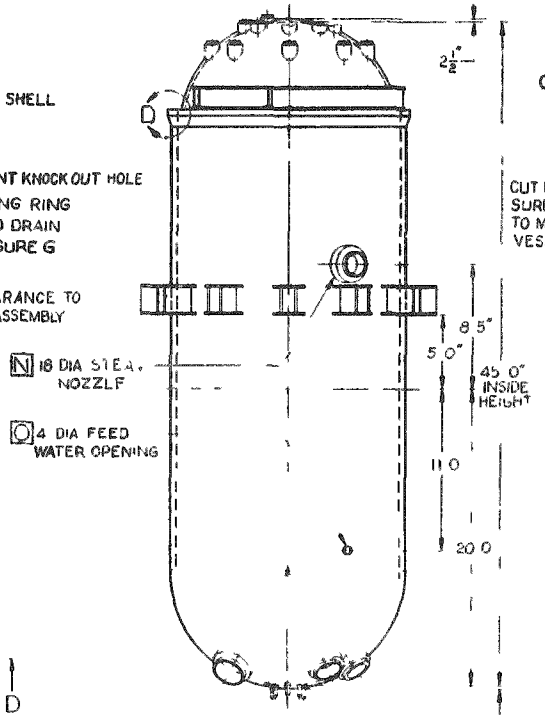

ELEVATION-VESSEL

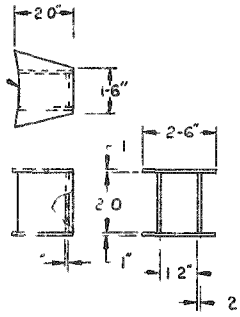

DETAIL F
SUPPORT BRACKET

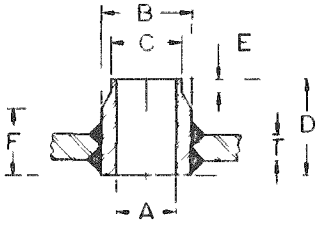

DETAIL E
TYPICAL NOZZLE REINFORCEMENT
THROUGH VESSEL SHELL

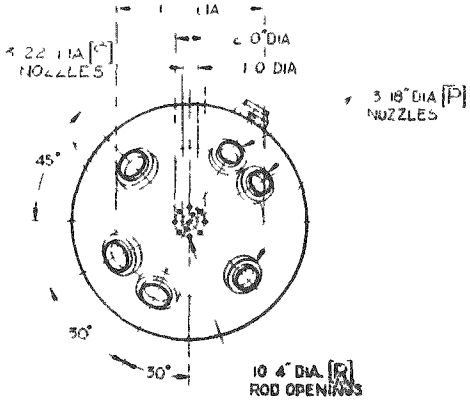

BOTTOM VIEW-VESSEL

NOTES

1 MATERIAL SA 302 INSIDE VESSEL STAINLESS STEEL CLAD
2 CYL WALL THICKNESS 5 1/4" LOWER HEAD THICKNESS, 2 1/2"
3 ALL NOZZLE SURFACES ON INTERIOR OF VESSEL, STAINLESS STEEL CLAD
4 NECK HEAD NOZZLE ENDS TO FIT STD 1500# WELD NECK FLANGES
5 ALL WELDS ON INTERIOR OF VESSEL, STAINLESS STEEL
6 ALL WELDS FULL PENETRATION

NOZZLE DIMENSIONS

LOCATION		QUAN	A	B	C	D	E	F	T
M	REMOVABLE HEAD	20	8	12"	-	10 1/2"		7 1/2"	2"
N	STEAM	1	18	28		24 1/4"		15 3/4"	4"
O	FEED WATER	1	4	8		20 4		15 3/4	4"
P	LOWER HEAD	10	4	6		14		10"	2"
R	LOWER HEAD	3	18	28"		17 1/2"		11 1/2"	2 1/4"
S	LOWER HEAD	3	22	32		18		12	2 1/2"

FIGURE A
15'-3" DIAMETER, 1000 PSI
BOILING WATER
REACTOR VESSEL

2.22 Material

2.221 Reactor Vessels

2.2211 This study is based on reactor vessels being built of low-alloy steel SA-302, Grade B, with 5% cladding, using a stress of 20,000 psi.

2.222 Containment Vessels

2.2221 This study is based on containment vessels being built of steel qualified to SA-300, using a stress of 13,750 psi.

2.23 Pressures

2.231 Pressures used are in accordance with design sheets furnished Consolidated by American.

2.24 Temperatures

2.241 Temperatures are calculated on the basis of using saturated steam at the given pressures.

2.25 Fabrication

2.251 Weld Design

2.2511 Design is based on the use of welded, rolled, and/or forged construction with double welded butt joints, stress relieved (unless wall thickness is less than 1-1/2").

2.252 Joint Inspection

2.2521 As specified in Sections 3 and 4, this report, joints will be either radiographed or inspected by the fluid penetrant method, or other allowable inspection methods as approved by the Code.

2.253 Joint Efficiency

2.2531 A joint efficiency of 95% has been assumed.

2.26 Internal Water Pressure

2.261 A possible static head of water inside the vessel has been ignored as a minor factor in wall thickness calculations.

CONSOLIDATED WESTERN STEEL

DIVISION UNITED STATES STEEL CORPORATION

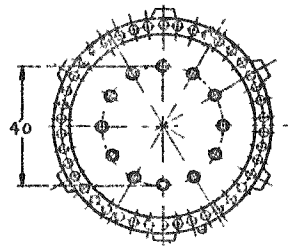

PLAN-VESSEL

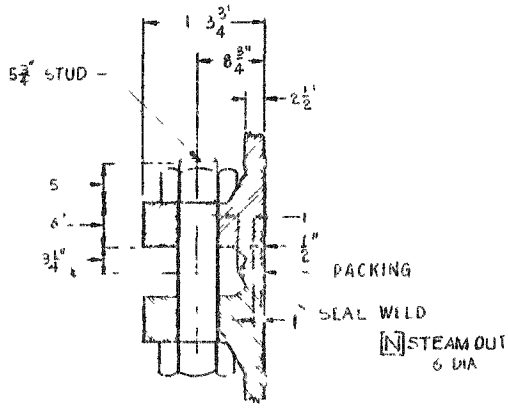

DETAIL A
HEAD CLOSURE

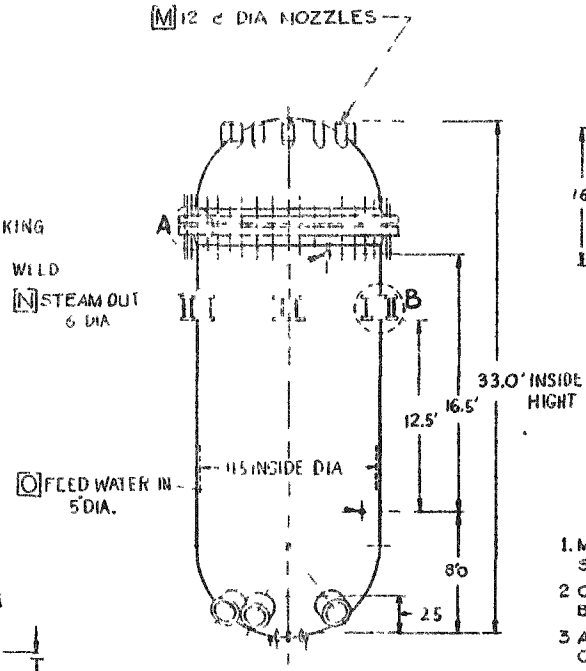

ELEVATION VESSEL

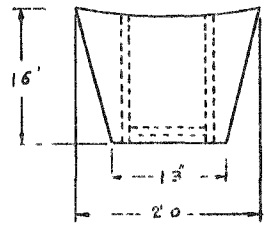

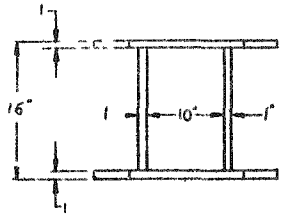

DETAIL B
SUPPORT BRACKET

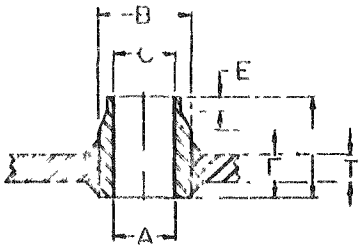

DETAIL C
TYPICAL NOZZLE REINFORCEMENT
THROUGH VESSEL SHELL

NOTES

1. MATERIAL-SA-302 INSIDE VESSEL STAINLESS STEEL CLAD
2. CYL WALL THICKNESS, 2.5" BOTH HEADS THICKNESS, 1.3"
3. ALL NOZZLE SURFACES ON INTERIOR OF VESSEL, STAINLESS STEEL
4. NECK HEAD NOZZLE ENDS TO FIT STD 1500# WELD NECK FLANGES
5. ALL WELDS ON INTERIOR OF VESSEL STAINLESS STEEL
6. ALL WELDS FULL PENETRATION

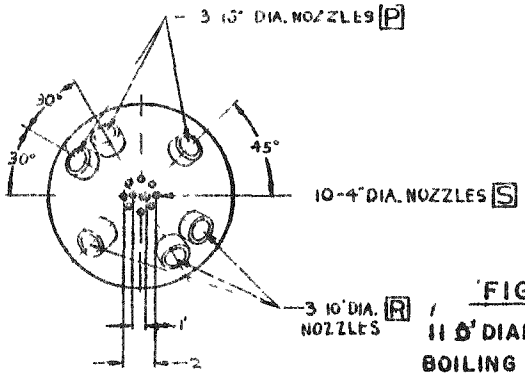

BOTTOM-VESSEL

NOZZLE DIMENSIONS

LOCATION	QUAN	A	B	C	D	E	F	T
M REMOVABLE HEAD	12	8"	11.5"		7.5"	1"	4.8"	1.3"
N STEAM	1	6"	10"		9"	1"	6.5"	2.5"
O FEED WATER	1	5"	9"		8.5"	1"	6"	2.5"
P LOW PR	3	16"	22"		9.3"	1 1/2"	5.8"	1.9"
R LOW PR	3	10	14"		8.3	1"	5.8"	1.3"
S LOWER HEAD	10	4	7"		7.05	5/8"	4.8"	1.3"

FIGURE B
11'0" DIAMETER, 600 PSI, BOILING WATER REACTOR VESSEL

2.27 Design Formulae

2.271 Reactor Vessels

2.2711 Reactor vessels have been designed in accordance with formulae in paragraph UG-27 of the Code:

Cylindrical Shell

$$t = \frac{PR}{SE - 0.6P}$$

Spherical Shell

$$t = \frac{PL}{2SE - 0.2P}$$

where

t = Wall Thickness in inches
P = Design Pressure, pounds per square inch
R = Inside Radius of shell, in inches, without allowance for corrosion.
L = Inside Radius of sphere, in inches, without allowance for corrosion.
S = Maximum allowable stress, pounds per square inch.
E = Joint Efficiency = 95%, assumed, stress-relieved.
E = Joint Efficiency = 80% assumed, non-stress relieved.

2.272 Containment Vessels

2.2721 Design

Containment vessel design is the same as reactor vessel design except for material (see paragraph 2.22 above).

2.2722 Pressure

Pressure has been assumed at 30 psig.

2.2723 Stress Relief

Containment vessels will not be stress relieved, since it has been practical to hold wall thickness to the limits discussed in paragraph 1.122 above.

2.2724 Inspection

Radiographic inspection will be used.

CONSOLIDATED WESTERN STEEL

DIVISION UNITED STATES STEEL CORPORATION

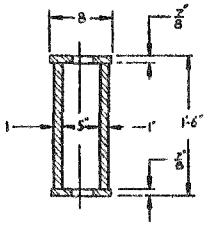

SECTION C-C
RETAINER HEAD
3" DIA. HOLD-DOWN BOLTS
OMITTED FOR CLARITY

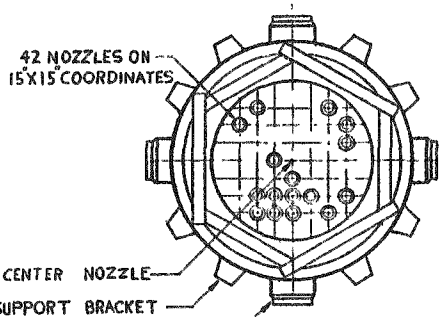

PLAN
VESSEL

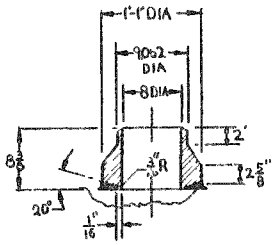

DETAIL B
TYPICAL HEAD NOZZLE
JOINT REINFORCEMENT

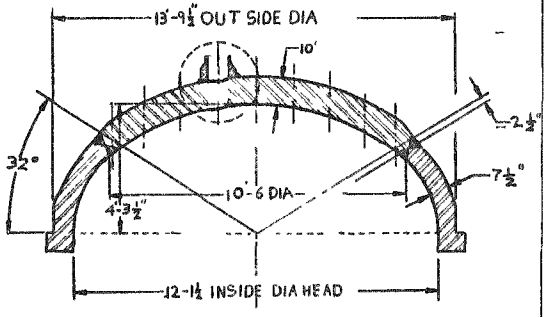

SECTION A-A
CROSS SECTION OF HEAD
OMITTING HOLD-DOWN BRACKETS

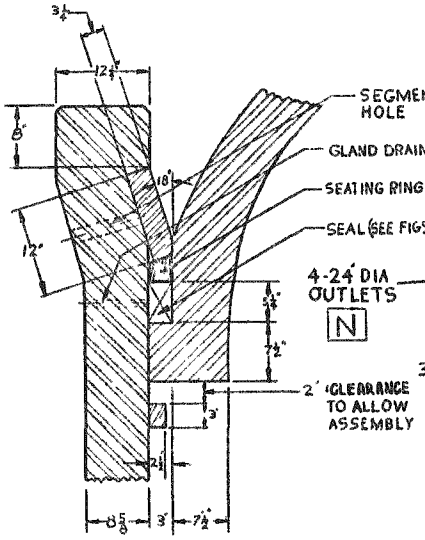

DETAIL D
HEAD CLOSURE

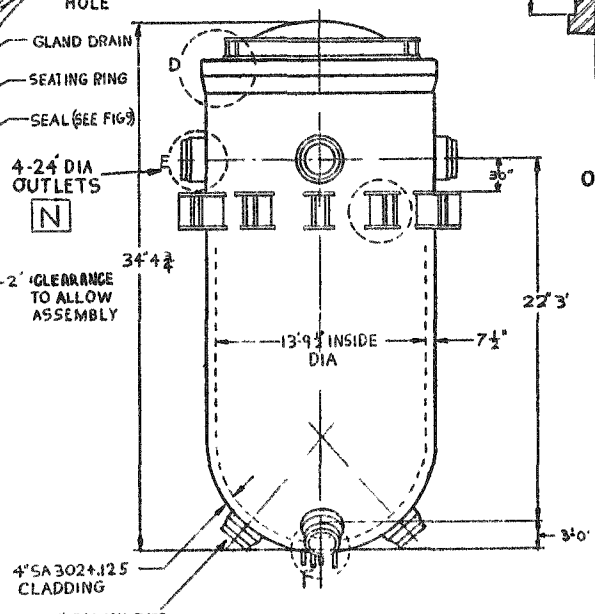

ELEVATION
VESSEL

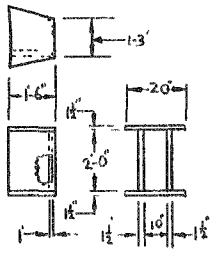

DETAIL F
SUPPORT BRACKET

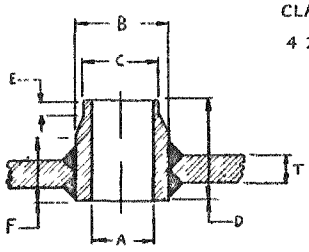

DETAIL E
TYPICAL NOZZLE REINFORCEMENT
THROUGH VESSEL SHELL

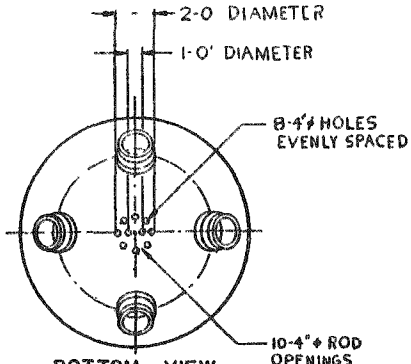

BOTTOM VIEW
VESSEL

NOZZLE DIMENSIONS

LOCATION		QUANTITY	A	B	C	D	E	F	T
N	OUTLET	4	24"	34"	29"	35½"	3½"	28 5/16"	8 5/16"
P	INLET	4	24"	30½"	29"	24"	2"	14½"	4⅛"
R	LOWER HEAD	10	4"	8"	4 31/32"	15⅛"	2"	10⅛"	4⅛"

NOTES

1. MATERIALS SA-302, INSIDE VESSEL - STAINLESS STEEL CLAD
2. CYL. WALL THICKNESS - 7.5" LOWER HEAD THICKNESS - 4.0" + .125" CLADDING
3. ALL NOZZLE SURFACES ON INTERIOR OF VESSEL STAINLESS STEEL CLAD
4. NECK HEAD NOZZLE ENDS TO FIT STD. 1500# WELD NECK FLANGES
5. ALL WELDS ON INTERIOR OF VESSEL STAINLESS STEEL
6. ALL WELDS FULL PENETRATION

FIGURE C

13.8' DIAMETER, 1800 PSI
BOILING WATER
REACTOR VESSEL

63388
FR

2.2725 Heads

The bottom heads of containment vessels will be semi-elliptical; and the top heads will be hemispherical.

2.2726 Drawings

No drawings illustrating this design are included in this report.

DISCUSSION

SECTION III

SPECIFICATION - GENERAL PROVISION

INDEX
SECTION III
SPECIFICATIONS-GENERAL PROVISIONS

3.1 General 33

3.2 Scope of Work 33

3.3 General Specifications
- 3.31 Codes 33
- 3.32 Certificates 34
- 3.33 Materials 34
  - 3.331 Reactor Vessels 34
  - 3.332 Containment Vessels 34
- 3.34 Cleaning 34
  - 3.341 Materials 35
  - 3.342 Preliminary Cleaning 35
  - 3.343 Final Cleaning 35
  - 3.344 Acid Cleaning 36
  - 3.345 Neutralizing 36
  - 3.346 Wire Brushing 36
- 3.35 Bolting 36
- 3.36 Cladding 36

3.4 Inspection
- 3.41 Procedure 37
- 3.42 Inspection-Visual 37
- 3.43 Inspection-Penetrant Method 37

3.5 Testing
- 3.51 Hydrostatic Testing 38
  - 3.511 Reactor Vessels 38
  - 3.512 Closures and Seals 38
- 3.52 Pneumatic Testing 38
- 3.53 Material and Test Records 38

3.6 Instruction Books - Equipment Catalogs 39

3.7 Transportation 39

3.8 Erection 40

3.0 SPECIFICATION-GENERAL PROVISIONS

3.1 GENERAL

This specification presents general and specific materials, processes, and procedures for fabricating nuclear reactor pressurized water, boiling water and containment vessels.

The subject vessels may be described as equipment containing lethal substances, and termed critical apparatus.

Generally, the specification, design and fabrication of pressurized and boiling water reactors and containment vessels, together with required appurtenances, will conform to the mandates of the 1956 revision (Addenda and Case Rulings) Section I of the ASME Pressure Vessel Code.

It is contemplated to fabricate the subject vessels by any one of the methods listed below, or by any combination of such general methods:

a. Welded forged sections (thick wall only)
b. Formed and welded solid plate (to 10" wall)
c. Any combination of forged or welded plate construction.

3.2 SCOPE OF WORK

The scope of work will consist of procuring or furnishing personnel, material, manufacturing facilities, labor and equipment to engineer, design, detail, fabricate, test and erect Boiling Water, Pressurized Water Reactor Vessels, in addition to such Containment Vessels as specified hereinafter and as proposed in subsequent design studies and recommendations.

3.3 GENERAL SPECIFICATIONS

3.31 Codes

All vessels described in this specification will be constructed in accordance with applicable provisions of Section I or Section VIII of the ASME Boiler and Pressure Vessel Code, including Case Interpretations of ASME Boiler and Pressure Vessel Code, approved by ASME Council September 6, 1956 and designated Case Nos. 1223, 1224, 1225 and 1226, as presented in Appendix A to this report.

Specific exceptions from Code requirements shall include the following:

a. Safety valves shall not be attached to the vessel proper.
b. Provisions for inspection handholes and manholes shall be omitted.
c. Provision for regular, periodic inspection of internal and external surfaces and welds shall be omitted.

3.32 Certificates

The vessel manufacturer shall furnish the buyer with:

1. ASME Code Certificate
2. Hartford Insurance Company Certificate of Inspection listing:

(a) Maximum Operating Pressure
(b) Maximum Operating Temperature
(c) Design Pressure
(d) Design Temperature
(e) Minimum Test Pressure
(f) Maximum Collapsing Pressure
(g) Minimum Allowable Heating and Cooling Rate

3.33 Materials

3.331 Pressurized and Boiling Water Reactor Vessels

a. Clad Vessels

Low Alloy Steel SA-302 Grade B with 5% SA-304 extra low carbon Stainless Clad will be used.

b. Unclad Vessels

SA 167 Grade 11 steel will be used.

3.332 Containment Vessels

Steel qualified under SA-300 at 13,750 psi allowable stress will be used.

3.34 Cleaning

3.341 Materials

Materials and chemicals used in process cleaning for vessels under consideration shall be new, clean and of commercial quality. Materials will generally consist of the following:

(a) Muriatic Acid
(b) Inhibitor (Formaldehyde, ACP Rodine #60, or equivalent)
(c) Stoddard Solvent
(d) Trichlorethylene
(e) Sand (40 Mesh)
(f) Alundum Grit (60 Mesh)
(g) Abrasive paper or cloth
(h) Steel Wire Brushes (Stainless Steel)

3.342 Preliminary Cleaning

Prior to welding; grease, oil, dirt, etc. shall be removed by the most suitable chemical process.

Abrasive cleaning (if required) shall be used to remove the remaining surface imperfections by application of sand, or alundum grit, under pressure, until the surface is visibly and chemically clean. Grease, oil, etc. must be removed prior to abrasive cleaning. Caution should be used in the application of grit, not to exceed the length of time necessary to clean the surface. Care must be exercised to guard against uneven and unnecessary erosion. Surfaces shall not be handled after abrasive cleaning until welding is completed.

3.343 Final Cleaning

Final cleaning of the surface (if warranted) may be accomplished by one of the following methods:

(a) Alkaline solution of 5-8 ounces per gallon (Concentration in hot 185 to 210° F).
(b) Softened water may be used to remove trace impurities after preliminary cleaning.
(c) Cleaning may be accomplished by immersion, scrubbing, or steam jet spray.

3.344 Acid Cleaning

Acid cleaning may be used if required, following abrasive cleaning or to remove rust traces unremoved by previous cleaning. Prepare a solution of 40-60% HCl by volume with remainder tap water at temperature of 120-140° F. Time of application shall be 15-60 seconds or until removal of contaminants is effected.

3.345 Neutralizing

Parts shall be thoroughly rinsed by tap water with residual particles being removed by wire brush scrubbing, during flushing operation. Application of hot water to rinsing process will speed drying.

3.346 Wire Brushing

Hand brushing or mechanical power-driven brushing will produce acceptable results. Apply brushing until surface appears free of scale, rust, etc. Chemical cleaning must precede wire brushing to remove oil, grease, etc.

3.35 Bolting

Bolting will conform to ASME Code.

3.36 Cladding

Cladding material where used on vessel surfaces and appurtences shall be stainless steel Type 304, extra low carbon. The bond integrity of all clad material will be demonstrated by admitting Nitrogen Gas at 2,000 psi between the two internal surfaces of a sample not less than 8" square. Gas leakage shall be indicated by a liquid soap solution applied to the entire clad surface. Bond integrity shall be established prior to fabrication and prior to stop testing. Cladding tests shall also precede rolling or pressing operations in order to discover defective materials at an early date.

3.4 INSPECTION

3.41 Procedure

The contractor will submit a detailed inspection procedure conforming to ASME Codes before beginning work.

3.42 Inspection-Visual

Visual inspection shall be made to determine that no cleaning solutions are entrapped in seams or between adjacent surfaces. No visible films shall be left on any surface subsequent to cleaning.

3.43 Inspection-Penetrant Method

3.431 Inspection of the surfaces of welded joints for detection of cracks, inclusions, and defects may be effected by means of the Penetrant Method. This method is applicable to the inspection of non-porous, non-absorbent materials which will be unaffected by reaction to the chemicals used in the process.

3.432 Two types of inspection methods are available:

3.4321 Fluorescent Penetrant

After application and processing, the penetrant fluoresces, or glows, strongly after exposure to "Black Light" (3,600 plus or minus 300 Angstrom Units Wave Length). Inspection by Fluorescent Penetrant will be restricted to two types:

3.4321(1) Post-Emulsification Procedure

Application of the emulsifier is made separately after application of penetrant.

3.4321(2) Combined Penetrant-Emulsifier Procedure

In this procedure, the emulsifier and penetrant are combined for application in a single operation.

3.433 Non-Fluorescent Penetrant

3.4231 Color of the penetrant contrasts strongly with background after examination under white light.

3.5 Testing

3.51 Hydrostatic Testing

3.511 Reactor Vessels - Hydrostatic testing will be used on vessels where the weight of water used in the test is not sufficient to cause deformity. Testing will follow Code requirements with all vessels tested to 150% of maximum allowable working pressure.

3.512 Closures and Seals - No external leakage will be permitted from any seal or closure device. A total leakage of one (1) gallon per hour will be allowed from all internal seals on any one vessel. All contaminated leakage shall be returned to the system or disposed of to the contaminated waste lines.

3.52 Pneumatic Testing - Reactor and Containment Vessels

3.521 Pneumatic testing will be used where vessel structures are sufficiently large to preclude the use of hydraulic tests. Tests will be conducted to not less than design pressure, with a mixture of 10% helium and 90% air. Leakage shall not exceed 0.001 total pressure per hour as determined by a mass spectrometer. Leakage source shall be determined by a General Electric, or equivalent, leak detector, by isolating suspect weld areas by the plastic bag method and "sniffing" for leakage source. All defects shall be satisfactorily rewelded.

Strain gaging will be required on containment vessels to closely observe structural yield patterns. Automatic data reduction will assure close control of testing procedure and give adequate warning of critical yield patterns in time to prevent structural deformation or failure.

3.522 Testing conditions will be individually tailored to correlate with the design of the vessel.

3.523 A detailed procedure for testing all vessel structures, either hydrostatically or pneumatically, will be submitted after vessel design is completed.

3.53 Material and Test Records

3.531 All tests on materials required by Section I, Power and Boilers of the 1956 Edition (including addenda and interpretations) of the ASME Boiler and Pressure Vessel Code, will be applied to each plate or portions thereof, forging or casting, utilized in the construction of Reactor or Containment Vessels. Results of tests will be approved before incorporation of the material into vessel assemblies.

3.532 The following information will also be supplied for record or approval.

3.5321 Plate number records, heat numbers, Mill Test Reports.

3.5322 Forgings and all heavy plate will be radiographed or non-destructively tested by other approved methods before incorporation into the structures. Defects in materials shall be reviewed by the Contractor and American Standard to determine acceptance or rejection.

3.5323 Permanent records giving location of plates, forgings, etc., shall be reported and preserved on final drawings or other adequate records.

3.6 INSTRUCTION BOOKS - EQUIPMENT CATALOGS

3.61 The contractor shall prepare a comprehensive Instruction and Calculation Manual containing the following items:

a. Detailed, explanatory representation of finished and assembled structures.

b. Design and operating criteria.

c. Complete design and stress calculations.

d. A reproducible copy of the General and Detail Specifications, together with twenty-five (25) copies of same.

e. Details and results of material, weld, procedure tests and hydrostatic tests.

f. Reproduction of Mill Tests.

g. Reproductions of ASME and Insurance Certificates required by the ASME Boiler and Pressure Vessel Code.

h. A list of recommended spare parts.

i. Five (5) copies of equipment vendor's specifications and dimensions of major purchased items.

3.7 TRANSPORTATION

3.71 A Transportation and Shipping Schedule will be prepared by the Contractor indicating the overall plan of shipment, proposed dates of shipment, routes, and methods of protecting equipment during transit.

3.8 ERECTION

3.81 The Contractor shall be responsible for transferring pressure vessels, components, and equipment or appurtences from the rail site to the erection site and shall provide field supervision and erection crew to completely erect, field fabricate, and test, vessels and equipment.

3.82 The Contractor shall also be responsible to connect all external piping to the vessel, together with installation of reactor vessel internal components. The Contractor shall conduct and supervise all Hydrostatic and Pneumatic Proof Tests.

DISCUSSION

SECTION IV

SPECIFICATION WELDING

INDEX
SECTION IV
SPECIFICATIONS-WELDING

4.1 Solid Stainless Wall Vessels
- 4.11 General 43
- 4.12 Welding-Head and girth Seams 43
- 4.13 Welding-Nozzles 44
- 4.14 Welding-Attachments 44
- 4.15 Stress Relieving 44

4.2 Stainless Clad Steel Wall Vessels
- 4.21 General 45
- 4.22 Qualification 45
- 4.23 Welding-Longitudinal Seams 46
- 4.24 Preparation 47
- 4.25 Welding-Head and Girth Seams 47
- 4.26 Welding-Nozzles 47
- 4.27 Depositing Stainless Overlays 49
- 4.28 Welding-Attachments 49
- 4.29 Stress Relieving 49

4.3 Steel Wall Containment Vessels 50
- 4.31 General 50
- 4.32 Cleaning and Inspection 50
- 4.33 Typical Weld Bead Detail 52

4.0 SPECIFICATION - WELDING

4.1 SOLID STAINLESS WALL VESSEL

4.11 General

4.111 All welding shall be done in accordance with Section VIII and IX of the ASME Boiler and Pressure Vessel Code as latest revised.

4.112 Manual welding on Type 304 stainless steel shall be done using Type 308 stainless steel coated electrodes.

4.113 Automatic welding on Type 304 stainless steel shall be done using Type 308 stainless steel wire and Arcos Arcosite B4 flux.

4.114 No preheat shall be used. Interpass temperatures shall be limited to 225° F. max.

4.115 The stainless steel surface shall be protected by spatter proof compound and a heavy paper or cardboard covering to avoid marring the inside surface. No fitup attachments shall be made to the inside surface of the plate.

4.116 Wherever possible, welding shall be done in a downhand flat position.

4.117 No peening shall be permitted on stainless steel welds.

4.118 Welding operators and procedures shall be qualified in accordance with Section IX of the ASME Boiler and Pressure Vessel Code. All completed welds shall be 100 percent X-ray radiographed in accordance with paragraph UW-51 of Section VIII of the ASME Boiler and Pressure Vessel Code. In addition, progressive X-ray inspection shall be used to check the weld quality during the welding operation.

4.12 Welding - Head and Girth Seams

4.121 Tack weld ring sections together with Type 308 electrodes using a 15°, 3/8" radius, 3/16" land, double V-groove joint.

4.122 Deposit weld passes starting on the inside.

4.123 Deposit 5 weld beads on the inside cleaning each pass

thoroughly by wire brushing with stainless steel brushes. Inspect each pass visually and by Dye-Chek. Chip or grind out all defects and repair before proceeding with subsequent passes.

4.124 Check alignment of plates accurately at this point.

4.125 Backchip weld from outside to sound metal. Deposit 10 weld beads inspecting each bead visually and with Dye-Chek.

4.126 Dye-Chek inspection of each weld bead pass shall not be required on subsequent passes, however, periodic Dye-Chek inspection should be made where defects are suspected. Each weld bead layer shall be thoroughly cleaned and visually inspected for defects.

4.127 Turn plate over, deposit 10 weld beads on the inside and then X-ray inspect. Continue depositing 10 weld beads first on one side and then on the other, X-raying each time until the weld groove is filled to the required depth.

4.128 Inspect completed weld by Dye-Chek and X-ray.

4.13 Welding-Nozzles

4.131 Nozzles shall be welded using a combination fillet and double bevel joint as shown on the drawing. (Figure)

4.132 Inspect welds by means of Dye-Chek and X-ray radiograph.

4.14 Welding - Attachments

4.141 All attachments to the stainless steel surfaces shall be made using Type 308 stainless steel weld metal.

4.15 Stress Relieving

4.151 All stress relieving of shop welds shall be done in accordance with paragraphs UW-40 and UCS-56 of Section VIII of the ASME Boiler and Pressure Vessel Code. Provisions applicable to the Type 304 stainless steel material shall apply.

4.152 Where practicable field welded joints shall be locally stress relieved by heating a band equal to twice the plate thickness or more on each side of the weld as specified in paragraph UW-40 of Section VIII of the ASME Boiler and Pressure Vessel Code.

4.2 STAINLESS CLAD STEEL WALL VESSELS

4.21 General

4.211 All welding shall be done in accordance with Section VIII and IX of the ASME Boiler and Pressure Vessel Code as latest revised.

4.212 All manual welding on ASTM A-302 Grade B material shall be done using AWS Class E9015 electrodes.

4.213 All automatic welding on ASTM A-302 Grade B material shall be done by the submerged-arc process using Linde 40 wire and Linde Unionmelt 80 flux.

4.214 Manual welding on Type 304 stainless steel shall be done using Type 308 stainless steel coated electrodes. However, before applying Type 308 weld metal to ASTM A-302 Grade B steel, the surface shall first be "buttered" with Type 310 (25 Cr 20 Ni) stainless steel coated electrodes. This latter procedure shall be used both when applying the stainless clad to the groove welds and when applying stainless steel overlays.

4.215 Automatic welding on Type 304 stainless steel shall be done using Type 308 stainless steel wire and Arcos Arcosite B4 flux. All ASTM A-302 Grade B steel surfaces shall first be buttered using Type 310 stainless steel wire and Arcos Arcosite B4 flux before applying the Type 308 weld deposits.

4.216 A minimum preheat temperature of 300° F. shall be used during all welding operations on ASTM A-302 Grade B steel.

4.217 The stainless clad steel surface shall be protected by spatter proof compound and a heavy paper or cardboard covering to avoid marring the surface.

4.218 All wedges for fitup must be driven on the carbon steel side only. Use wood under all clamps applied to the stainless clad steel surface. No fitup attachments shall be welded to the stainless clad steel surface.

4.22 Qualification

4.221 Wherever possible, all welding shall be done in a downhand flat position.

4.222 Peening may be used only with extreme caution when absolutely necessary to control distortion when depositing the carbon steel welds. No peening shall be permitted on stainless steel welds.

4.223 Welding operators and procedures shall be qualified in accordance with Section IX of the ASME Boiler & Pressure Vessel Code.

4.224 All completed welds shall be 100 percent X-ray radiographed in accordance with paragraph UW-51 of Section VIII of the ASME Boiler and Pressure Vessel Code. In addition, progressive X-ray inspection shall be used to check the weld quality during the welding operation.

4.23 Welding - Longitudinal Seams

4.231 Tack weld longitudinal seams together from the carbon steel side using AWS Class E-9015 electrodes.

4.232 Preheat by heating plate to 300° F. with multiple flame torches covering a band equal to the plate thickness each side of the seam. Check bottom of groove with Tempilstiks to make certain that the proper temperature has been reached.

4.233 Deposit weld passes starting on the stainless clad steel side using the approximate sequence shown on the attached sketch.

4.234 Deposit 5 weld beads on the inside cleaning each pass thoroughly by wire brushing. Inspect each pass visually and by Magnaflux. Chip, arc gouge or grind out all defects and repair before proceeding with subsequent passes.

4.235 Check alignment of plates. Peen if necessary to correct for distortion.

4.236 Backchip weld from carbon steel side to sound metal. Deposit 10 weld beads inspecting each bead visually and with Magnaflux.

4.237 After depositing 5 weld beads on one side and 10 weld beads on the other, X-ray weld 100 percent. Chip, arc gouge, or grind out all defects and repair.

4.238 Magnaflux inspection of each weld bead pass shall not be required on subsequent passes, however, periodic Magnaflux inspection should be made where defects are suspected. Each weld bead layer shall be thoroughly cleaned and visually inspected for defects.

4.239 Turn plate over, deposit 10 weld beads on the clad side then X-ray inspect. Continue depositing 10 weld beads first on one side and then on the other X-raying each time until the weld groove is filled to the required depth as indicated on the attached sketch. Weld ASTM A302 Grade B steel only to within 1/4 inch of the clad steel surface.

4.24 Preparation

4.241 Chip or grind carbon steel surface smooth and deposit 1/8" approximately layer of Type 310 weld metal.

4.242 Thoroughly clean weld surface by blasting with stainless steel shot and apply finish layers of stainless steel using Type 308 weld metal deposits.

4.243 Inspect completed weld by Dye-check and X-ray per Code requirements

4.25 Welding - Head and Girth Seams

4.251 Weld head and girth seams by placing ring sections on rollers, tacking them together from the carbon steel side, and weld while rotating the vessel.

4.252 Weld head and girth seams using the same procedure as specified for the longitudinal seams.

4.26 Welding-Nozzles

4.261 Stainless steel nozzles shall be welded using a combination fillet and double bevel joint as shown on the drawing.

4.262 Welding on the stainless clad side shall be done first with Type 310 stainless steel electrodes to butter the carbon steel surface then with Type 308 stainless steel weld metal.

4.263 Welding on the carbon steel side shall be done using Type 310 stainless steel weld metal only.

4.264 Inspect welds by means of Dye-check and X-ray radiograph.

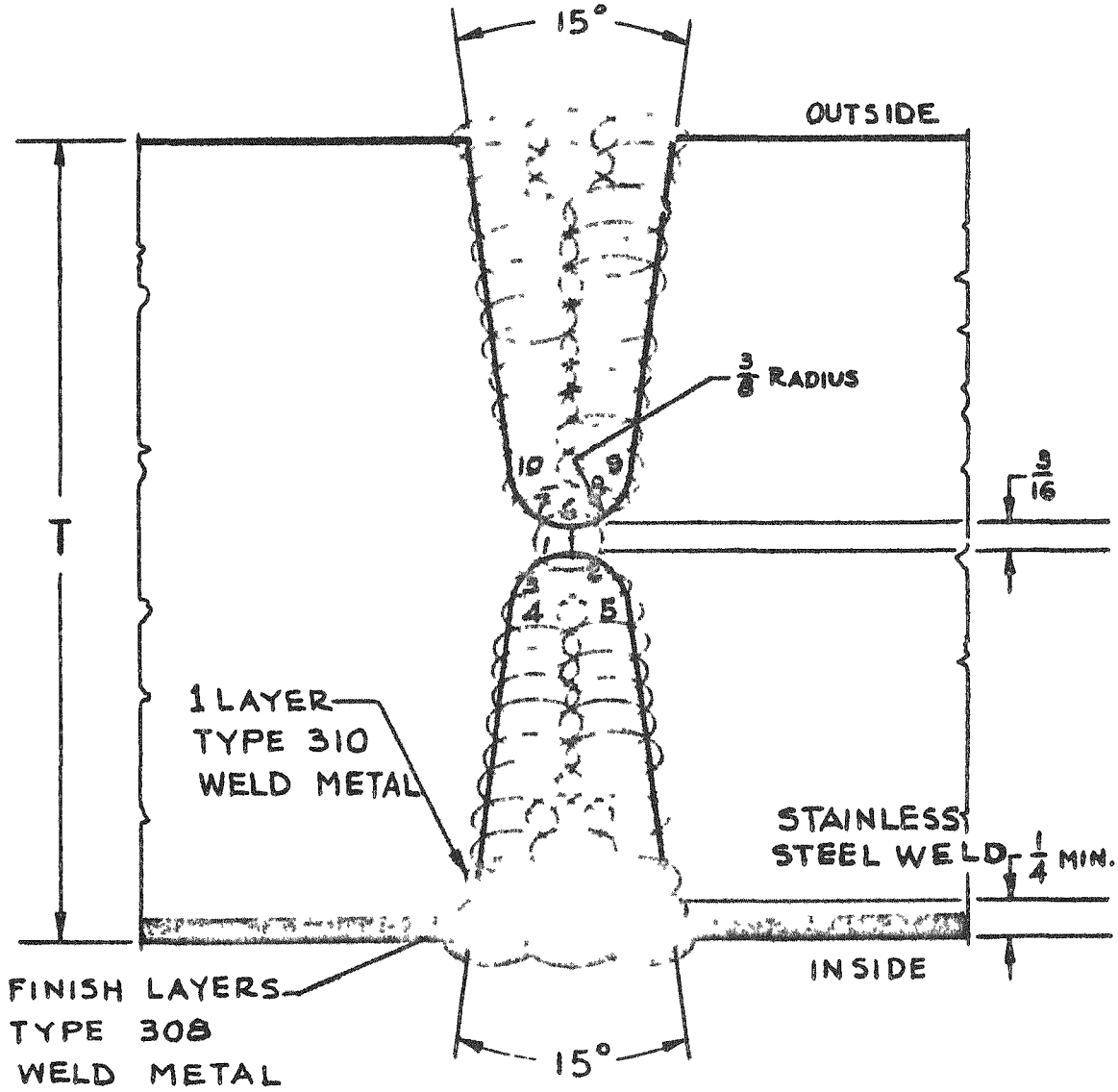

Fig. 4.239a

Typical weld bead sequence.

The sequence may be varied to suit the manual or automatic welding condition being used.

Details
Heavy Wall Stainless Clad Steel
Vessels

4.27 Depositing Stainless Overlays

4.271 In depositing stainless steel overlays on carbon steel flanges, the surface shall first be buttered with a 1/8 inch layer of Type 310 weld metal before depositing the finish weld layers with Type 308 weld metal.

4.272 Build up stainless steel overlays to a depth of 3/8 inch then machine finish to 1/4 inch thickness.

4.28 Welding - Attachments

4.281 All attachments to the stainless steel clad surface shall be made using Type 308 stainless steel weld metal.

4.282 All carbon steel attachments to the outside surface of the vessel shall be welded using AWS class E9015 electrodes.

4.29 Stress Relieving

4.291 All stress relieving of shop welds shall be done in accordance with paragraphs UW-40 and UCS-56 of Section VIII of the ASME Boiler and pressure vessel code. Provisions applicable to the ASTM A302 Grade B backing material shall apply.

4.292 Where practicable field welded joints shall be locally stress relieved by heating a band equal to twice the plate thickness or more on each side of the weld as specified in paragraph UW-40 of Section VIII of the ASME Boiler and pressure vessel code.

4.293 Preheating and peening of each weld bead in field welds may be used for stress relieving in lieu of thermal stress relieving where the latter procedure is not practicable.

4.3 STEEL WALL CONTAINMENT VESSELS

4.31 General:

4.311 All welding shall be done in accordance with Section VIII and IX of the ASME Boiler and Pressure Vessel Code for Unfired Pressure Vessels.

4.312 Manual Welding
All manual welding on ASTM 285 Grade C material shall be done using AWS Class E60XX electrodes.

4.313 Automatic Welding
Automatic welding on ASTM A-285 Grade C material shall be done using any one of the following wire and flux combinations:

Lincoln L60 wire with Lincoln 760, 780, or 840 flux.
Linde Oxweld 36 wire with Unionmelt 20, 80 or 90 flux.
Linde Oxweld 29 or 43 wire with Unionmelt 50 or 90 flux.

4.314 Preheat
No preheat shall be required for plate 1-1/4" thick or less except that when the base metal temperature is within the range of 0 to 32° F, inclusive, the base metal within 3 inches of the place where welding is to be started shall be heated to a temperature warm to the hand.

4.315 Weld Qualification
Welding operators and procedures shall be qualified in accordance with Section IX of the ASME Boiler and Pressure Vessel Code.

4.316 Sequence
All vertical seams shall be completed in any one course and the adjacent course before welding round seams.

4.317 Joint Design
Vertical seams shall be welded using a 60° double vee groove, 1/8" land joint. Round seams shall be welded using a 60° offset double vee groove 1/8" land joint as shown on the attached sketch.

4.32 Cleaning and Inspection

4.321 Cleaning
All seams shall be thoroughly cleaned of all rust, scale, dirt and grease prior to welding. Each weld bead pass shall be thoroughly cleaned of slag before depositing subsequent passes.

4.322 Backgouging
All seams shall be chipped, arc-gouged, or ground to sound metal before welding the second side. All gouged grooves shall be power brush cleaned before welding.

4.323 Inspection
All welds shall be 100% X-ray radiographed in accordance with paragraph UW-51 of Section VIII of the ASME Boiler and Pressure Vessel Code. In addition, spot radiographing shall be used to check the weld quality during the welding operation.

4.324 Repairs
All defective welds shall be backchipped, arc-gouged, or ground to sound metal and repaired by welding.

4.325 Cracks
The propagation of weld cracks when they occur shall be stopped by drilling a 1/4" diameter hole at each end of the crack.

4.326 Identification
All welds shall be identified by stamp marks of the operator along side of the welds or repairs.

4.33 Typical Weld Bead Detail

4.331 See Figure 4.33 on Page 52.

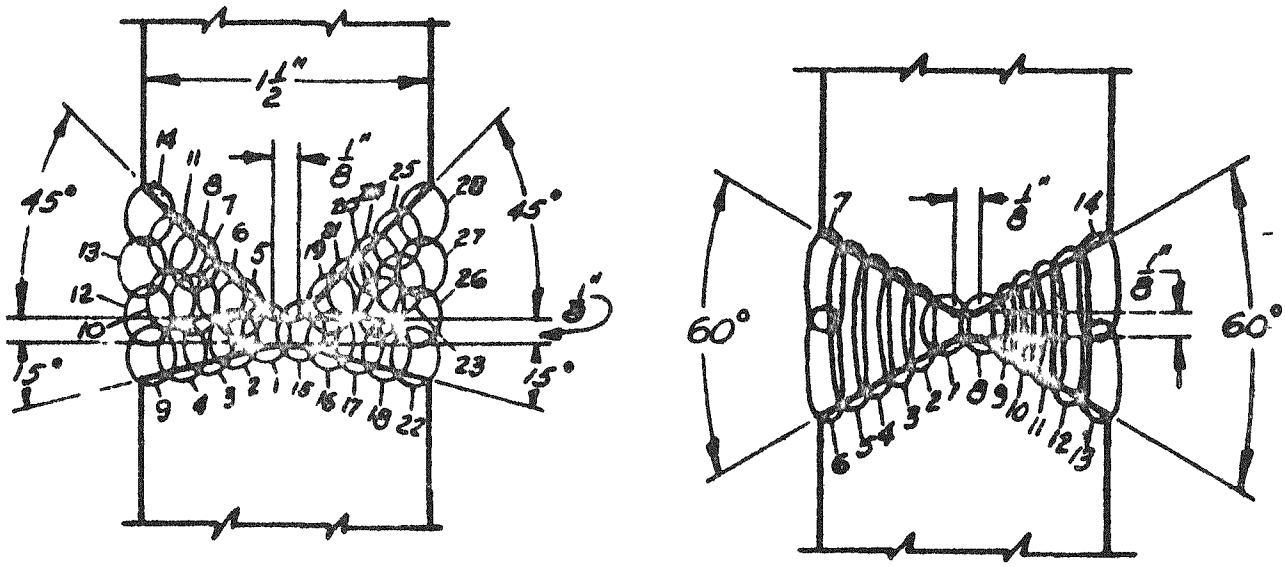

HORIZONTAL SEAMS VERTICAL SEAMS

Fig. 4.33

Typical weld bead sequence for manual welding on containment vessels. The sequence may be varied to suit the manual or automatic welding being used.

Details

Containment Vessel Welding

DISCUSSION

SECTION V

HEAD CLOSURES

INDEX
SECTION V
HEAD CLOSURES

5.1 General
5.11 Conventional Type Closures 55
5.12 Suitable Closures for Reactor Vessels 55
5.121 Large Vessels 55
5.122 Small Vessels 55

5.2 Closure Limitations
5.21 Bolted Joint Limitations 55
5.22 Pressure Limitations 60
5.23 Code Limitations 60

5.3 Closure Design
5.31 General 61
5.32 Comparison of Closure Designs 61
5.321 Closures D and E 61
5.322 Closures F and G 61
5.323 Conclusion 61
5.33 Details of Closures 61
5.331 Details-Closure F 61
5.332 Details-Closure G 61

5.4 Economic Analysis of Closures 63
5.41 General 63
5.42 Ratio of Costs 63
5.421 Using Low Alloy Steels 63
5.422 Using Solid Stainless Steels 63

5.0 Head Closures

5.1 General

5.11 Conventional Type Closures

5.111 Conventional type closures for large diameter heads, such as metallic seals, flat gaskets used with raised face flanges, and various other unique sealing arrangements have been developed over a period of years for use in conventional pressure vessels and piping.

5.112 None of the conventional sealing arrangements seems to lend itself directly to the application of removable heads for reactor service.

5.12 Suitable Closures for Reactor Vessels

5.121 Large Vessels

5.1211 For large vessels, it appears desirable to produce a double seal which will permit the space between the seals to be monitored to determine the effectiveness of the inner seal, and insure zero external leakage.

5.1212 It is the opinion of Consolidated that the most effective seal for this purpose is a modified Bridgeman type double seal, which will allow monitoring of the inner seal. Most of the closures illustrated on the vessels in this report are based on this type of seal.

5.122 Small Vessels

5.1221 For small diameter vessels, it may be feasible to use a normal closure, with some type of flat gasket for the inner seal, with a seal weld on the outer seal.

5.1222 This type of closure is also illustrated on the drawings.

5.2 Closure Limitations

5.21 Bolted Joint Limitations

5.211 The maximum diameter that can be effectively sealed with a bolted connection is a function of the Code limitations on the allowable stress of the bolting material.

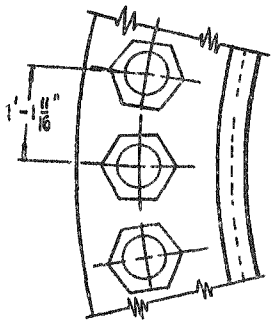

RING DETAIL

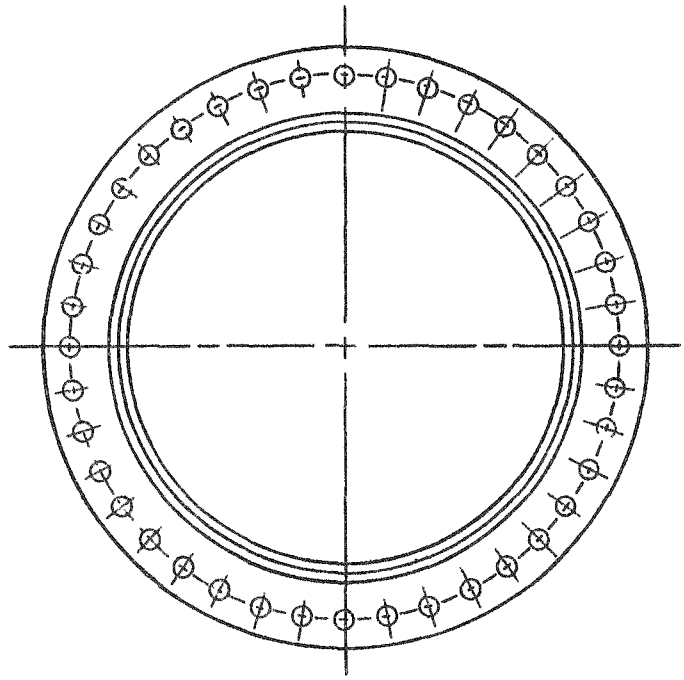

PLAN

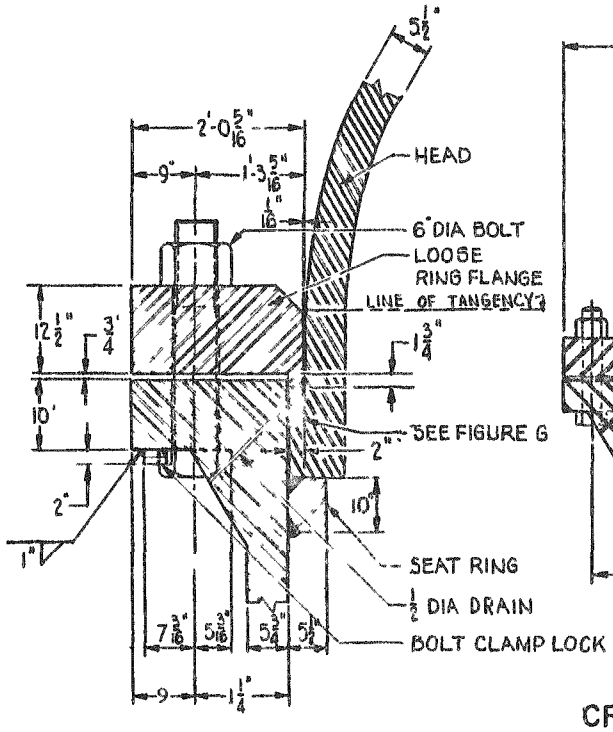

CLOSURE DETAIL

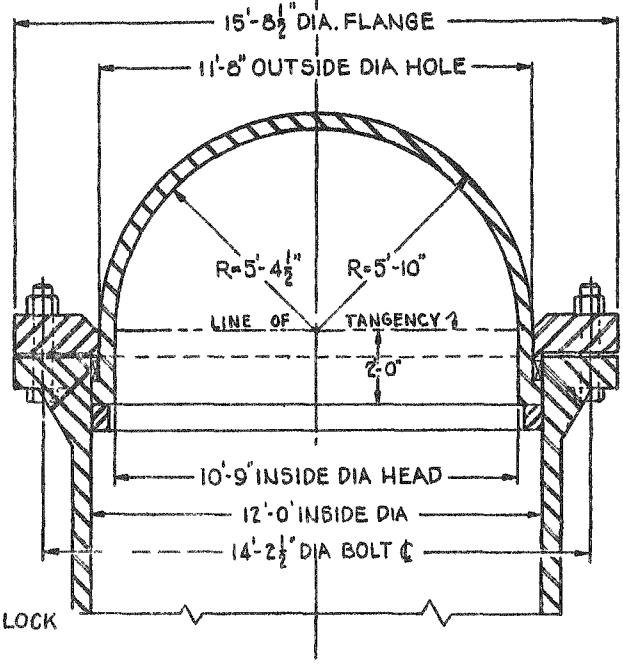

CROSS SECTIONAL ELEVATION

FIGURE D

LOOSE RING FLANGE
HEAD CLOSURE

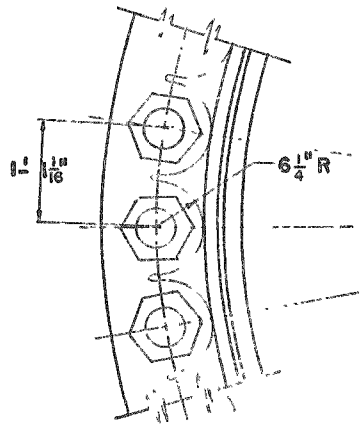

RING DETAIL

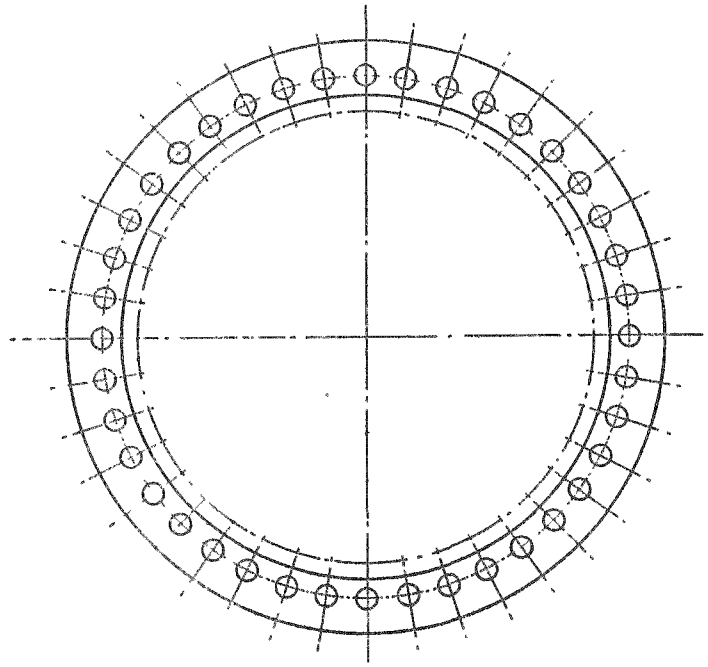

PLAN

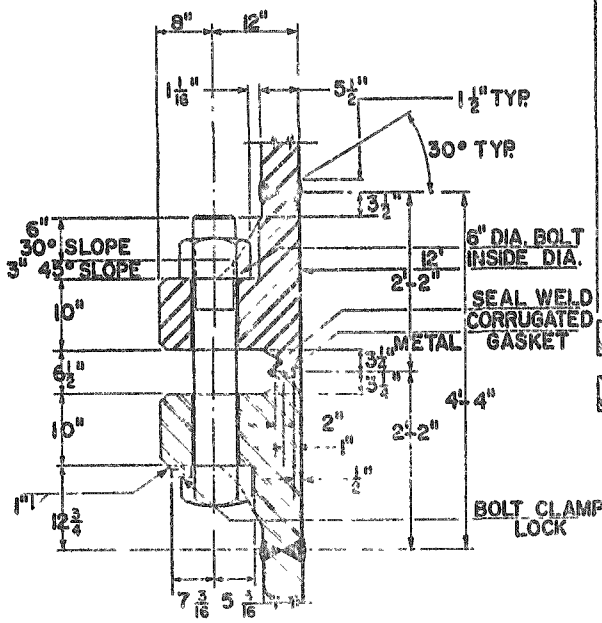

CLOSURE DETAIL

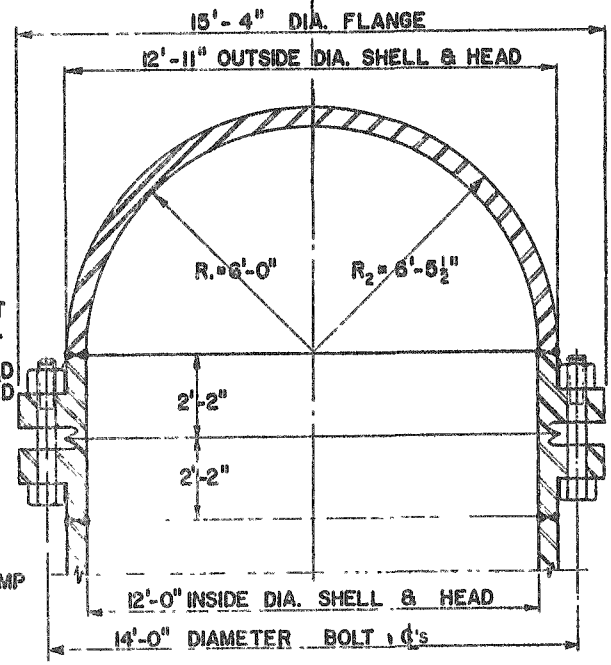

CROSS SECTIONAL ELEVATION

FIG. E

FLANGED HEAD TYPE CLOSURE
WITH WELD

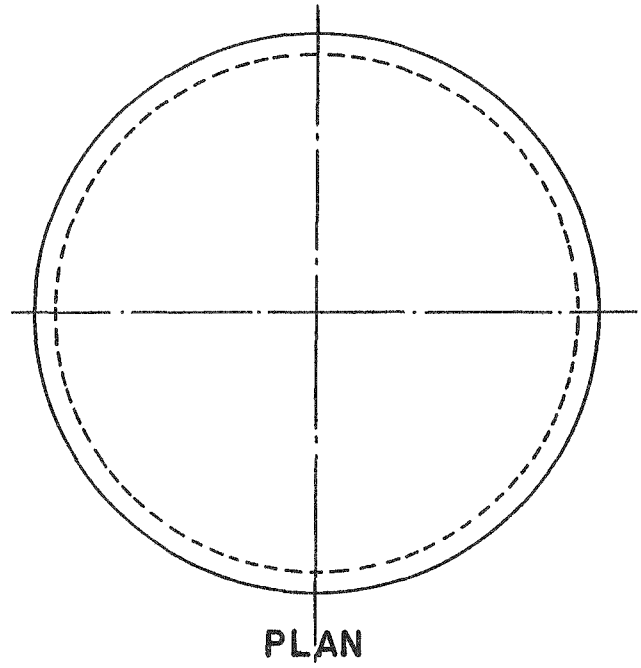

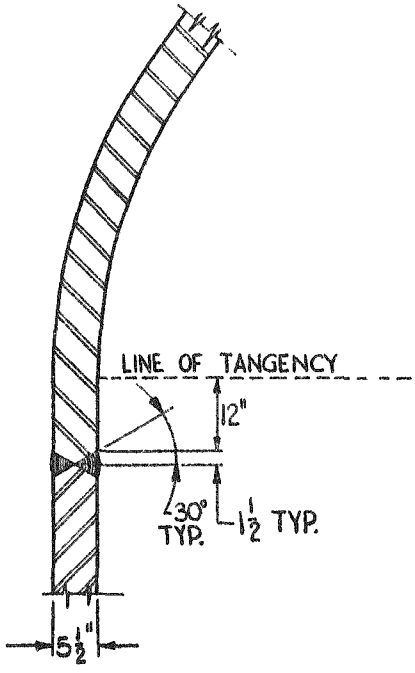

CLOSURE DETAIL

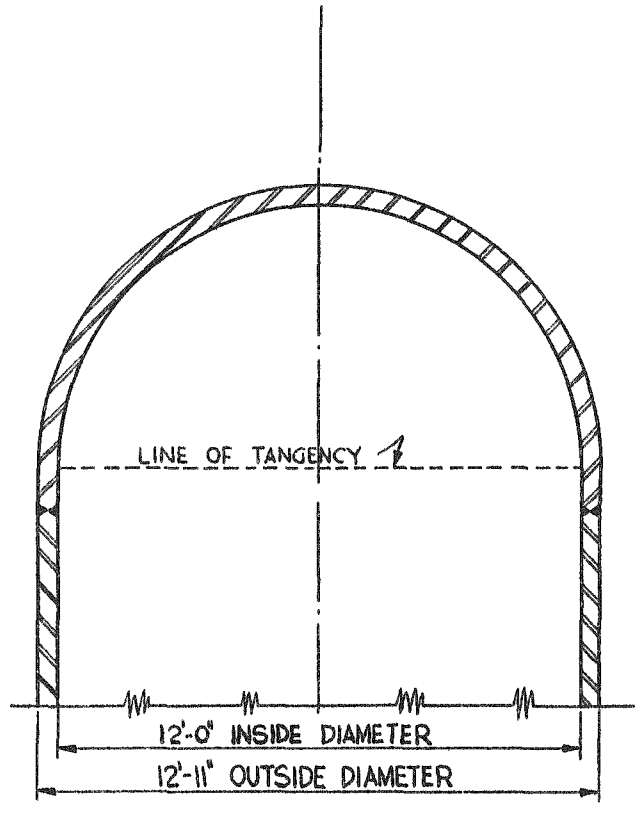

CROSS SECTIONAL ELEVATION

FIGURE F
WELDED
HEAD CLOSURE

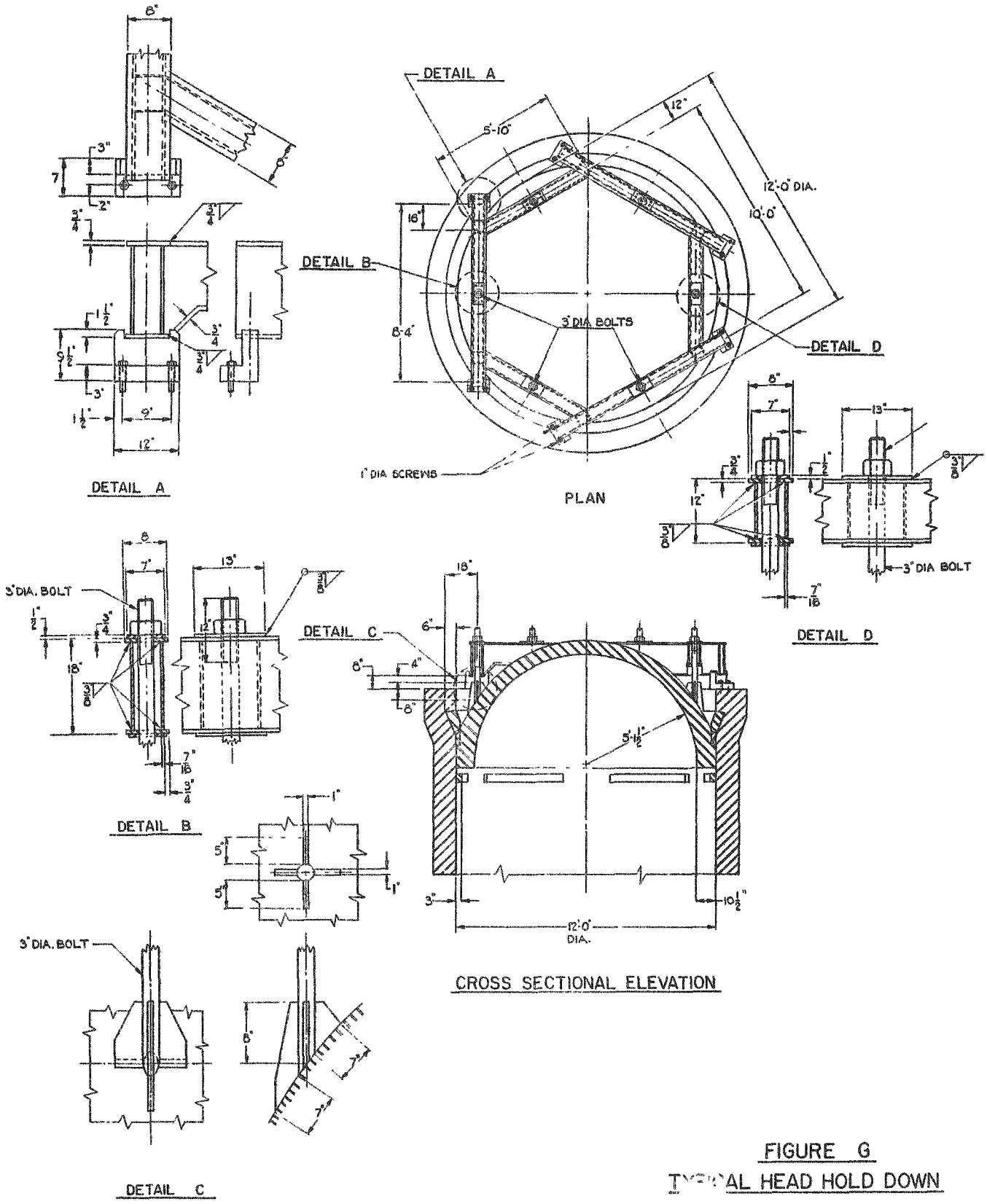

FIGURE G
TYPICAL HEAD HOLD DOWN

5.212 Under certain conditions of size and pressure, the Code may require more bolts than can be accommodated in the available bolt circle.

5.213 When this limitation is reached, the most practicable removable head closure appears to be the shear key arrangement illustrated by the enclosed vessel drawings. This connection is designed to be within Code requirements.

5.22 Pressure Limitations

5.221 For a bolted closure where the bolts are in tension, the maximum pressure that can be effectively sealed is a function of the maximum preload that can be applied to the bolts. The bolts must be preloaded so that the stress in the bolt under pressure does not exceed the preload stress to insure that the sealing surfaces do not part because of deflection.

5.222 The modified Bridgeman type seal presented herein avoids this difficulty since additional pressure merely serves to apply additional forces to the seal, thereby causing a tighter seal as the pressure is increased.

5.23 Code Limitations

5.231 The Code merely sets minimum standards, and does not in any sense relieve the designer or manufacturer from design responsibility. Therefore, there is not, to Consolidated's knowledge, any limitation affecting the shear key type closure presented.

5.3 Closure Designs

5.31 General

5.311 Four possible closure designs for large diameter heads are shown in the accompanying drawings.

Figure D Loose Ring Head Closure
E Flanged Head Type Closure
F Welded Head Closure
G Typical Head Hold-Down

5.312 Figure H shows details of the seal suggested for use with the tabulated vessels, Figures A, B, and C.

5.32 Comparison of Closure Designs

5.321 Closures D and E

5.3211 Closures shown on Figures D and E are restricted in their usage to the maximum diameter and pressure able to be accommodated by the flange bolts in the space allowed, within the applicable sections of the Boiler Code.

5.322 Closures F and G

5.3221 Closures shown on Figures F and G are not restricted in their usage by any provisions of the Code other than those limitations imposed by the Code on other portions of the vessels studied.

5.323 Conclusion

5.3231 In view of paragraphs 5.21 and 5.22, closures on Figures F and G will apply to all of the vessels reported herein.

5.33 Details of Closures

5.331 Details - Closure F

5.3311 The closure shown on Figure F consists of hemispherical head attached by means of a simple double "V" butt weld.

5.3312 This construction makes head removal difficult, if not impossible, without possibility of destroying the vessel.

5.332 Details - Closure G

5.3321 The closure shown on Figure G is the modified Bridgeman type seal previously generally discussed (and also identified as shear key type closure).

5.3322 Application of this seal provides two general sealing areas with an annular space between. This annular space can be monitored to determine the effectiveness of the inner seal, and to prevent leakage through the outer seal.

5.3323 Forces on the head due to internal pressure are carried through the Bridgeman type seal to a series of segments loaded in shear to transmit the load to the vessel shell.

5.3324 An external frame is provided with sufficient bolts to lift the head against the seal, and insure the initial setting of the seal. These bolts and this frame are of sufficient strength and rigidity to maintain the seal under internal vacuum conditions.

5.3325 This closure permits relatively rapid head removal when required.

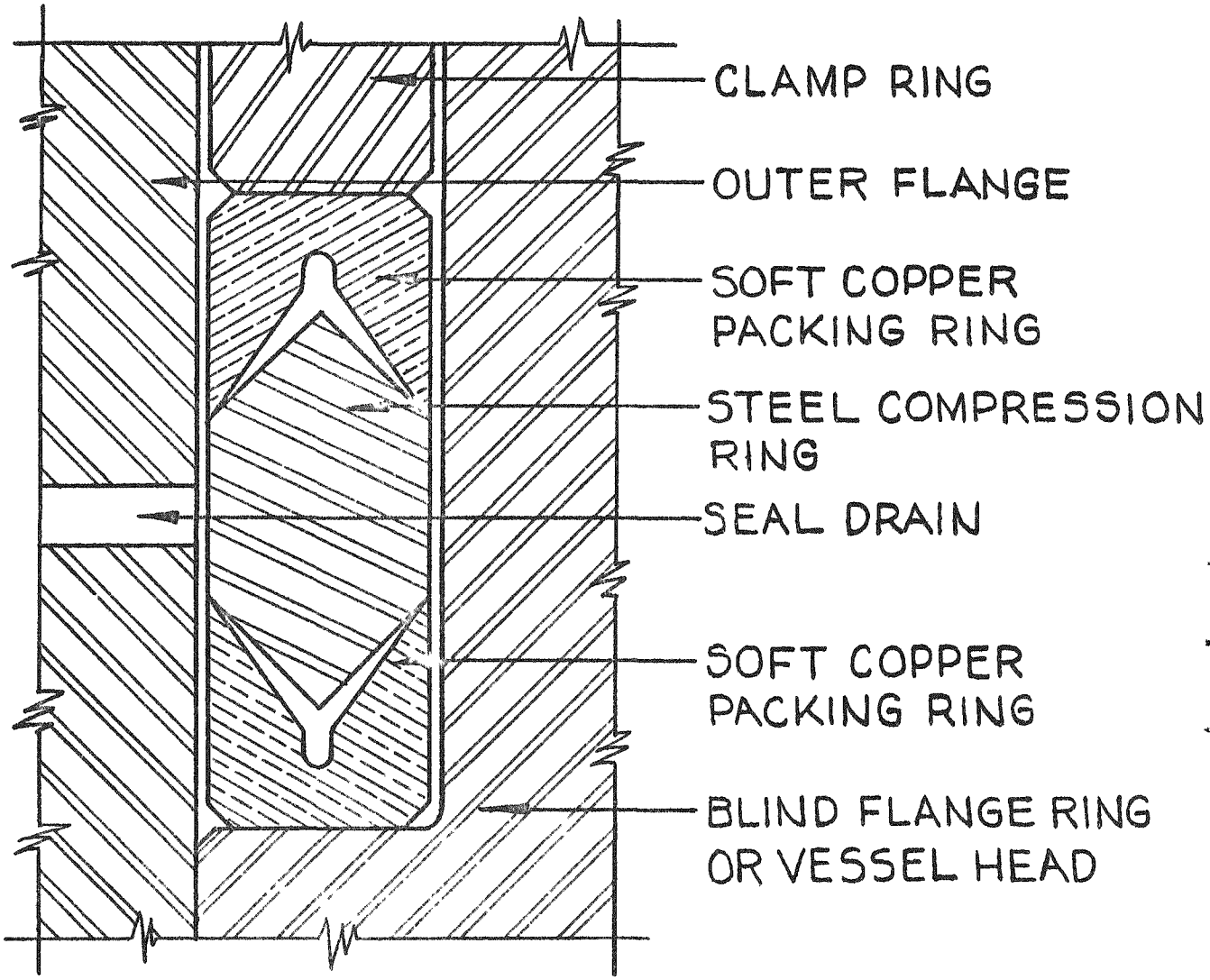

FIGURE H
TYPICAL SEAL

5.4 Economic Analysis of Closures

5.41 General

5.411 The relative costs of the various closures discussed appears to be a function of costs of the sealing material itself, and of the number of bolts and bolt holes which must be produced, since the general configuration of the several joints are very similar.

5.412 In general, the shear key, or Modified Bridgeman type of closure is more economical to produce than any other practical closure. The difference of costs between this type of a closure and a bolted closure increases with size and the internal pressures to be contained.

5.42 Ratio of Costs

5.421 The relative costs of the closures shown on Figures D, E, F and G are as follows:

5.4211 Using Low Alloy Steels

Assuming Closure F as unity, the cost ratios would be about as follows, if fabricated from low-alloy low-carbon steel with cladding applied separately:

Closure F, hemispherical welded head	- 1
G, Bridgeman type seal	- 3
D, loose ring head closure	- 6 to 7
E, flanged head type closure	- 6 to 7

5.4212 Using Solid Stainless Steels

Again assuming Closure F in low-alloy steel as unity, the cost ratios would be about as follows, if fabricated from stainless steels:

Closure F, hemispherical welded head	- 1-1/4
G, Bridgeman type seal	- 3-3/4
D, loose ring head closure	- 7-1/2 to 8-3/4
E, flanged head type closure	- 7-1/2 to 8-3/4

DISCUSSION

SECTION VI

COST DATA

INDEX
SECTION VI
COST DATA

6.1 Reactor Vessels
6.11 General 67
6.12 Extrapolation of Data 67
6.13 Conclusion 67

6.2 Containment Vessels
6.21 General 67
6.22 Shape Comparison 68
6.23 Details Omitted 68
6.24 Shell Thickness 68
6.25 Extrapolation of Data 68

6.3 Cladding
6.31 Type 304 Stainless Cladding 68

6.4 Tabulation of Cost Data 69

6.5 Head Closures 70

6.6 Fabrication 70
6.61 General 70
6.62 Field Erection 70

6.0 COST DATA

6.1 REACTOR VESSELS

6.11 General

6.111 At the request of American, specific cost data has been studied and is tabulated in Table 6.4 below, for fabrication and erection of three illustrative reactor vessels, with like data for appropriate containment vessels.

6.112 Relationships have also been established between clad plate construction, solid stainless construction, and forged ring construction.

6.12 Extrapolation of Data

6.121 These vessels have been selected so that the results of these cost studies may be extrapolated approximately for all of the vessels listed by relating these pound prices to the weights of the other vessels included in the survey.

6.122 Since the tabulation of reactor vessel data in Tables 2.13 and 2.14 list net weights, then the cost per pound based on net weight must be used to extrapolate the cost of the other vessels.

6.13 Conclusion

6.131 This study indicates that through the ranges of sizes investigated, the pound prices of the vessels decrease as the diameter of the vessels increases.

6.2 CONTAINMENT VESSELS

6.21 General

6.211 As indicated above, cost data has been studied for container vessels of various internal volumes, comparable with the reactor vessels also so studied.

6.212 These containment vessels are designed for Code compliance, and may be Code fabricated and erected without stress relieving.

6.22 Shape Comparison

6.221 The tabulation, Table 6.4, includes cost data covering fabrication and erection of both cylindrical and spherical vessels to establish the most economical approach to the containment problem.

6.23 Details Omitted

6.231 Since detailed data on openings, structural supports, or foundations would be dependent upon more definitive design than is now practicable, the cost of these items is not included in the tabulated figures.

6.24 Shell Thickness

6.241 Tabulated costs are based on a uniform shell thickness throughout each vessel.

6.242 It is recognized that specific designs would dictate varying shell thicknesses, but the tabulated costs are definitive enough to establish an adequate basis for comparison purposes.

6.25 Extrapolation of Data

6.251 The three reactor vessels estimated and tabulated in Table 6.4, in general, cover the range of costs believed to be encountered in fabricating vessels of this type.

6.252 In view of the above, it is believed that the approximate cost of any size containment vessel probable to be required for application in this reactor study can be determined with reasonable accuracy by extrapolating the tabulated values.

6.253 See paragraph 6.122 for use of tabulated weights.

6.3 Cladding

6.31 Type 304 Stainless Cladding

6.311 An analysis indicated that 1/4" type 304 ELC stainless steel sheet can be applied as cladding by stitch welding on 2" centers for approximately $50. per square foot.

6.312 In addition, a vessel of this type may be clad by laying a continuous bead of appropriate stainless steel as an overlay,

TABLE 6 4
TABULATED COST DATA

REACTOR VESSELS	FIG	INSIDE DIA	WALL	INSIDE HT SHELL	INT PRESS	SHOP COST /LB	FIELD COST /LB	GROSS WT	COST /LB GROSS WT	NET WT	COST /LB NET WT	TOTAL COST
		FT	IN	FT	PSIG	DOLLARS	DOLLARS	TONS	DOLLARS	TONS	DOLLARS	DOLLARS
A_R	A	15 33	5 25	45 0	1,000							
CLAD PL						134	115	303	2 49	239	315	1,505,700
SOLID S S						184	121	323	3 05	249	397	1,973,090
B_R	B	11 5	2 5	33 0	600							
CLAD PL						280	37	103	317	78	417	650,520
SOLID S S						315	37	122	352	86	498	856,560
C_R	C	13 85	8 4	34 3	1800							
CLAD PL						147	132	431	279	331	363	2,403,060
SOLID S S						194	136	491	3 30	346	468	3,238,560
(FOOTNOTE 1)						180	136	529	3 16	346	483	3,342,360
D_R	—	15 17	9 75	34 3	2000							
(FOOTNOTE 2)						139	169	150	3 08	425	471	4,003,500
CONTAINMENT VESSELS	NO DWGS											
A_C	1,310,000 CUBIC FT (750 TOP HEAD ON CYL)											
CYLINDER		100	146	116	30	13	13	2150	26	1688	331	1,118,000
SPHERE		135 8	100		30	138	127	1485	265	1180	333	787,000
B_C	1,360,000 CUBIC FT (750 TOP HEAD ON CYL)											
CYLINDER		100	146	123	30	13	13	2230	26	1755	33	1,159,600
SPHERE		137 4	100		30	138	127	1495	265	1205	33	794,652
C_C	524,000 CUBIC FT (625 TOP HEAD ON CYL)											
CYLINDER		86	1125	47	30	16	15	800	31	675	367	496,000
SPHERE		100	73		30	163	148	606	311	482	39	376,500

FOOTNOTE 1 LOW CARBON-LOW ALLOY FORGED RING CONSTRUCTED WITH SEPARATELY APPLIED STAINLESS CLAD

2 FORGED RING-SA302-CLAD BY 1/4" SA304 STITCHED ON 2" CENTERS OR BY A CONTINUOUS WELD BEAD APPROXIMATELY 1/4" THICK

3 WEIGHTS SHOWN FOR ALL VESSELS IN THE ACCOMPANYING CHARTS ARE NET WEIGHTS, THEREFORE, COSTS BASED ON NET WEIGHTS MUST BE USED TO EXTRAPOLATE COSTS OF OTHER VESSELS

machining to approximately 1/4" thickness for approximately $306 per square foot.

6.4 Tabulation of Cost Data

6.41 This data is listed in Table 6.4, attached.

6.5 Head Closure

6.51 For economic analysis of head closures see paragraph 5.4, this report.

6.6 Fabrication

6.61 General

6.611 As a generalized statement, vessels that can be transported in one piece are more economical if they are completely fabricated in the shop.

6.62 Field Erection

6.621 Vessels requiring field erection after shop fabrication will have increased costs of approximately 20% over full fabrication in the shop.

6.622 If stress relieving is required, approximately $100,000 for each site must be added to the figures derived by the method in 6.621 above to allow for increased field equipment and facilities.

6.623 Additional amounts may be required for other erection facilities.

APPENDIX A

CODE INTERPRETATION

APPENDIX A

Interpretations of ASME Boiler and Pressure Vessel Code

Approved by ASME Council, September 6, 1956.

Case No. 1223
(Interpretation of Par. P-108)

Inquiry: May austenitic stainless steel materials conforming to one of the grades of specifications acceptable in Section I be used in welded construction without a stress-relief heat-treatment after welding as required by Par. P-108? Are any special inspection requirements necessary?

Reply: (a) It is the opinion of the Committee that thermal heat treatment, including stress-relief, of austenitic stainless-steel weldments is neither required nor prohibited; therefore, the joints of all parts of austenitic stainless steel, regardless of thickness, welded under the provisions of Section I are exempt from the stress-relieving requirements of Par. P-108.

(b) All weldments over $^3/_4$ in. thick shall be examined for the detection of cracks by the fluid penetrant method. This examination shall be made following heat treatment if heat-treatment is performed.

(c) Weldments required to be radiographed by the requirements of Par. P-102(h) shall be radiographed following heat-treatment if heat-treatment is performed.

CAUTIONARY NOTE: In recognition of controversial opinion relative to the effect of thermal treatment of austenitic stainless steels, mandatory requirements for such have been omitted. Service experience is too limited to permit comparison between the relative safety of as-welded and thermally treated, including stress-relieved, austenitic steel weldments, particularly in thick sections. It is suggested that reference be made to the Non-Mandatory Appendix of Part UHA of the 1956 Section VIII.

Case No. 1224
(Special Ruling)

Inquiry: Neither Section I nor Section VIII of the ASME Boiler and Pressure Vessel Code as now written precisely covers pressure vessels that are an integral part of a nuclear installation. Under what rules shall they be constructed?

Reply: The Committee recognizes that in the design of nuclear installations, requirements will differ from those of conventional boilers and pressure vessels.

1—It is the opinion of the Committee that vessels that are an integral part of nuclear installations built in accordance with the requirements of the ASME Boiler and Pressure Vessel Code as modified or defined in this and subsequent cases, meet the intent of the Code, and each vessel shall be marked as required by the section to which it is built including the appropriate Code Symbol. In addition the words, "Case No. —" shall appear on the Data Report.

2—All vessels that are an integral part of nuclear installations shall be constructed in accordance either with the requirements of Section I or with the requirements of Section VIII for vessels that are to contain lethal substances.

3—It is intended that jurisdiction over piping external to vessels shall terminate at:

(1) The first circumferential joint for welding end connections; or,

(2) The face of the first flange in bolted flange connections; or,

(3) The first threaded joint in that type of connection.

APPENDIX A continued

Case No. 1225

(Special Ruling)

Inquiry: Various safety requirements of Section I and Section VIII would actually be hazardous if applied literally to the design of nuclear reactors. May these requirements be modified for reactors of the pressurized water and boiling water types?

Reply: It is the opinion of the Committee that nuclear reactors of the pressurized-water and boiling-water-type will meet the intent of the Code and shall be marked in accordance with Case No 1224 if the following provisions are met:

(1) Totally enclosed pop-type safety or relief valves shall be provided, but need not be directly attached to the vessel provided there is no valve between the vessel and the safety or relief valve, also they shall be installed as close as is practical to the vessel. They shall not discharge to the atmosphere, and shall discharge to a suitable system designed to condense any vapors At least two safety or relief valves are required and the total capacity shall be sufficient to insure that the design pressure is not exceeded by more than 10 per cent.

(2) Direct reading pressure gages are not required At least two independent devices for determining pressure are required and these shall not be dependent on the same external source of energy.

(3) Inspection openings, gage glasses, water columns, and gage cocks are not required.

Case No. 1226

(Special Ruling)

Inquiry: May containment vessels* for nuclear reactor installations be built under Section VIII, Code for Unfired Pressure Vessels without stress relieving as specified in Par. UW-2(a)?

Reply: It is the opinion of the Committee that these containment vessels fall under the category of those containing lethal substances but still may be built without stress relieving provided the following requirements are met

(1) Plates and forgings of containment vessels exposed to the elements (not inside a heated enclosure) shall conform to specifications SA-300 for plates and SA-350 for forgings These and other materials and the construction shall meet the impact test requirements of Par. UG-84 at a temperature not less than 30 F below the lowest recorded ambient temperature of the area in which the containment vessel is to be erected, except that the lowest test temperature may be assumed to be 50 F for any part in the United States

(2) Welding procedures and operators shall be qualified in accordance with Section IX

(3) All doors, nozzles, and opening frames shall be preassembled into shell plate and stress relieved as complete assemblies for welding into the shell. Also, special consideration should be given to make the design of the reinforcement for large openings as strong as the shell (see Par. UA-7)

(4) The thickness of shell and head plates shall not exceed that for which stress relief is required in accordance with Par. UCS-56.

(5) All longitudinal and circumferential joints shall be of the double-welded butt type and shall be fully radiographed in accordance with Par. UW-51. All welds on doors, nozzles, and openings frames, and all welds that cannot be radiographed shall be examined for cracks by magnetic particle or fluid penetrant method of inspection

(6) The Case number shall appear on the Manufacturers Data Report Form

---

* *Containment Vessels* are those outer vessels which enclose the primary reactor vessel and/or portions of the primary coolant circuit. The containment vessels are not normally pressurized but are built to contain the lethal radioactive substances that may be released in case of an accident or failure of any part of the primary reactor vessel or coolant circuit.