Second United Nations
International Conference
on the Peaceful Uses
of Atomic Energy

A/CONF.15/P/1468
UNITED KINGDOM
10 June 1958

ORIGINAL: ENGLISH

Confidential until official release during Conference

THORIUM METAL PRODUCTION BY A CHLORINATION PROCESS

by

* A. R. Gibson
* J. H. Buddery
+ J. R. Chalkley
= R. P. Marshall

Introduction

1. There are three main methods of making thorium metal:-

(i) Calcium reduction of thorium oxide.
(ii) Calcium reduction of thorium fluoride in the presence of zinc.
(iii) Fused salt electrolysis.

2. The first of these has the disadvantage that very finely divided thorium powder is produced which contains several percent of thorium oxide and may be pyrophoric. The second has the disadvantage of being a long and expensive process to operate. Fused salt electrolysis can be carried out using melts containing either thorium fluoride or chloride. The use of the fluoride has the advantage that it is easier to handle than the chloride, being relatively unaffected by moist air, but the disadvantage that water-insoluble fluorides are difficult to remove from the metal deposit in the leaching stage, and hence the metal is often contaminated by fluorides. The use of the chloride has the advantage that a water-soluble melt is formed, so that the melt may be completely removed from the thorium metal by leaching, but the disadvantage that it is very hygroscopic and difficult to handle. The route described in this paper partly avoids this latter difficulty by preparing and handling thorium chloride only as a solution in a non-reactive melt of sodium chloride and potassium chloride. In this way the hygroscopic nature and volatility of the pure chloride are greatly reduced.

Chemistry and Mechanics of the Chlorination Process

3. The process to be described is based on the chlorination of thorium oxide suspended in a sodium chloride/potassium chloride melt by chlorine in the presence of a reducing agent. Initially, metal sulphides were used as

* U.K. Atomic Energy Authority, A.E.R.E., Harwell.
+ Impregnated Diamond Products Ltd., Gloucester.
= Late of Impregnated Diamond Products Ltd., Gloucester.

DISCLAIMER

Portions of this document may be illegible in electronic image products. Images are produced from the best available original document.

reducing agents, as has been fully described elsewhere(1), but their use has now been superseded by carbon, and will not be described here. The chlorination reaction using carbon as the reducing agent may be expressed by the equations:-

$$ThO_2 + C + 2Cl_2 = ThCl_4 + CO_2$$

$$\text{and } ThO_2 + 2C + 2Cl_2 = ThCl_4 + 2CO$$

4. For successful application of this process to thorium metal production the two important criteria are that the chlorination should go to completion and that the rate of reaction should be sufficiently high to be economic. Little trouble is experienced in making the reaction go to completion, and detailed study has shown that the rate of reaction is dependant on at least six variables:-

(i) The concentration of the effective chlorinating agent

5. The reactions expressed by the equations given are heterogeneous, between solid thoria, solid carbon and chlorine. It is believed that the chlorine is very much more effective in these reactions when it is dissolved in the liquid phase. The solubility of chlorine in these melts appears to be very low, but may be effectively increased by having present in the melt a lower valent chloride (e.g. ferrous chloride) which will absorb chlorine to form a higher valent chloride (e.g. ferric chloride). The chloride of higher valency then acts as a chlorinating agent. Several multivalent metals are successful in catalysing the reaction in this way. Iron was the most successful of those tried.

(ii) The reactivity of the thorium oxide

6. Pure thorium oxide is normally prepared by calcination of thorium oxalate, and its reactivity is principally determined by the temperature of calcination. Thus thoria prepared at 600°C is considerably more readily chlorinated than that produced at 1100°C. However, the former tends to be so light and fluffy that it is difficult to handle and can cause considerable health hazard. For economic and safe working it is desirable to have a process which will chlorinate the denser thoria produced by calcination of oxalate at about 1100°C. All three practical techniques developed for carrying out this process will handle high calcined thoria.

(iii) The reactivity of the carbon

7. Carbon is normally prepared by thermal decomposition of carbonaceous material, and its reactivity is generally determined both by the temperature of calcination and by the particle size of the carbon. A very wide range

---

(1) Gibson, A. R., and Buddery, J. H., An oxide-chloride conversion process for the extraction of certain metals. Symposium on "Extraction and Refining of the Rarer Metals". Institution of Mining and Metallurgy, London, (1957).

of reactivities is available in commercial carbons and graphites, varying from finely divided lamp blacks and activated charcoals to high density impervious graphites.

(iv) The reactivity of the chlorine

8. Chlorine for this process may be used in two forms; as diatomic, molecular gas from commercial steel cylinders or in the considerably more reactive (probably monatomic) form, produced at the anode in the electrolysis of a chloride melt. The use of "anodic" chlorine necessarily requires a modification of the experimental technique to ensure that a chlorine producing anode is available for chlorination, and that undesirable cathodic reactions do not occur.

(v) The degree of contact between the reactants

9. The rate of the chlorination reaction may be greatly increased by ensuring the best possible degree of contact between the carbon and the thorium oxide. The degree of contact may be varied from, on the one hand, adding thoria by itself to a melt containing carbon in the form of a solid block, to adding to the melt an intimate mixture of carbon and thoria such as is formed by carbonising a mixture of thoria with sugar or starch.

(vi) Temperature

10. Generally, the rate of reaction increases with temperature, but other factors, such as volatilisation of thorium chloride from the melt, limit the temperatures that may be economically used.

11. Practical considerations of the effect of these variables on the rate of reaction result in three feasible routes for this process. Firstly, there is the route using carbon in the form of a finned solid block, with thorium oxide fed separately into the melt and the "concentration" of the chlorine increased by the presence of a multivalent catalyst such as ferric chloride in the melt. This is known as the "Carbon Block Route" or "Catalysed Conversion". Secondly, the chlorination may be carried out without a catalyst, but with the thoria and carbon intimately mixed by calcining a thoria/starch or thoria/sugar mixture. This is known as the "Bonded Carbon Route". Both these methods use chlorine in the form of gas from steel cylinders. The third possible method is to use thoria and carbon, in the form of thorium oxide and a massive carbon surface, without a catalyst, and with nascent chlorine liberated at a carbon anode surface. This is known as "Anodic Chlorination".

12. A complicating factor in the chlorination process is the existence of thorium oxychloride, $ThOCl_2$, in the melt. This is not formed as an intermediate in the chlorination reaction but by back-reaction between the thoria and thorium chloride once the latter exceeds a certain critical concentration in the melt (about 15%).

$$ThO_2 + ThCl_4 = 2ThOCl_2$$

13. Some oxychloride remains in the melt after all suspended thoria has disappeared, and must be removed before electrodeposition of thorium, since otherwise it will deposit a mixture of thoria and thorium at the cathode.

Removal may be effected by continuing chlorination in the presence of carbon.

$$ThOCl_2 + C + Cl_2 = ThCl_4 + CO$$

14. The end-point of the chlorination reaction may be found by simple volumetric analysis of aqueous solutions of samples of the melt(2).

The Carbon Block Route or Catalysed Conversion

15. Figure 1 shows a typical apparatus for chlorination using carbon in the form of a massive block. The melt is contained in a silica pot, and the chlorine is fed in through a silica tube, at the bottom of which is a fluted carbon block. A mixture of sodium chloride and potassium chloride in eutectic (equimolar) proportions is melted in the pot, chlorine is bubbled through the melt, and iron catalyst added either as metal, oxide or chloride. Once the iron has been chlorinated thorium oxide is added to the melt at such a rate that a large excess is not present at any time, otherwise the melt become viscous and chlorination slows down. A temperature of 800°C is maintained during chlorination. The chlorine reacts with the thoria in the presence of the carbon block, the latter being slowly eroded away. The carbon thus removed is consumed in the process and does not result in any carbon powder forming in the melt. The progress of chlorination is observed by removing small samples of the melt by the quick immersion and removal of a cold silica rod, and analysing these samples, initially for the presence of water-insoluble thoria. As the reaction proceeds and suspended thoria disappears the samples are analysed for water-soluble thorium oxychloride(2). Chlorination is continued until both thoria and thorium oxychloride are absent. When the reaction is complete the melt contains only chlorides of thorium, sodium, potassium, and ferrous iron. Further passage of chlorine results in the evolution of copious brown fumes of ferric chloride from the melt.

16. The quantities of iron and thoria used are normally those necessary to give a final melt containing about 40 wt.% thorium and 1.5 wt.% iron.

The Bonded Carbon Route

17. The feed material for the bonded carbon route is an intimate mixture of thorium oxide and reactive carbon prepared by mixing thoria with either starch, sugar or glucose and carbonising the mixture at 850°C, when all organic matter is removed. The product is then finely crushed. The apparatus used for the bonded carbon route is the same as that used for the carbon block route. In this case the carbon block serves only to distribute the suspended material and the chlorine, not as reducing agent. The chlorination is carried out as before, except that no iron catalyst is used. Oxychloride formation again occurs and the end point is determined by analysis as before. The temperature of operation is normally 900°C. The final clear melt passes to the electrolysis stage. Should the final melt contain either a little

---

(2) Chalkley, J. R., An analytical control for the thorium oxide-chloride conversion process. Atomic Energy Research Establishment Report A.E.R.E. X/M 170 (1956).

excess carbon or a little excess thorium oxide this can be removed by adding an equivalent small amount of the other reactant.

18. Of the two routes for effecting chlorination, the catalysed route gives the higher chlorine absorption efficiency. Despite this, the technological and economic advantages of the bonded carbon route commend this for large scale operation.

Electrolysis

19. The melt prepared by the bonded carbon route is ready for electrolysis to thorium metal, but that prepared by the catalysed conversion contains ferrous chloride which must be removed prior to thorium electrolysis, otherwise iron will deposit on the cathode at a lower potential (1.1 volts at 800°C) than thorium (2.2 volts at 800°C). Iron may be removed from such melts simply and efficiently by pre-electrolysis between an iron cathode and a carbon anode, with or without the presence of hydrogen gas injected into the melt. The iron content of the melt may be reduced from an initial 1 or 2 percent to about 10 parts per million.

20. The electrodeposition of thorium is relatively simple. Under melt conditions tetravalent thorium is the only stable species, hence cathodic reduction side-reactions and anodic oxidation side-reactions cannot occur. The three main variables in electrolysis are temperature, current density and concentration of thorium ions.

Temperature

21. The temperature of the melt during electrolysis is limited to the approximate range 700°-800°C. Below 700°C the surface of the melt begins to freeze and above 800°C losses of thorium chloride by volatilisation become serious. Temperature variation over this relatively narrow range has no noticeable effect on the type of metal deposited.

Current Density

22. The deposited thorium metal consists of tree-like dendrites, hence the effective area of the cathode continually changes during deposition. Thus a value for cathode current density is largely meaningless except for the initial stages of deposition. Cathode current densities reported refer to the original molybdenum cathode surface exposed. Cathode current densities over the range 180-1800 amp/dm^2 and anode current densities over the range 14-135 amp/dm^2 have been used with no noticeable effect on the type of metal deposited.

Concentration of thorium ions in the melt

23. The normal electrolysis procedure is to start with a melt containing 15 weight % thorium and to electrolyse this until all the thorium has been deposited. When the deposit is removed from the cell, the entrained melt contains no thorium chloride. Thus the concentration of thorium ions in the melt changes continually during electrolysis. The initial metal deposit is fine, and it becomes coarser as electrolysis proceeds. This is not

necessarily a result of the change of thorium concentration, and may be due to the initial deposit containing the oxygen and other impurities from the melt.

Practical cell operation

24. Several designs of electrolytic cell have been tried. Of these the one shown in Figure 2 (which is self-explanatory) was among the most successful. Cell operation is as follows:-

25. The cell, fitted with the anode, cathode and catch plate, and with the lid completely sealed, is first dried by heating to 650°C in an argon atmosphere, and allowed to cool overnight. The catch plate and cathode are rested on the bottom of the cell, which is then loaded with thorium-containing salt (40 wt. % Th), usually in lump form, and previously dried sodium chloride-potassium chloride eutectic is carefully packed in. Sufficient eutectic is used to give an electrolytic bath containing 15 wt.% of thorium. The anode and lid are fitted with the former held above the salt. The lid is sealed in position with asbestos and alumina cement. The cell is heated to 700°C under a protective atmosphere of argon.

26. The cathode is raised from its position of rest on the catch plate and the anode is lowered to a position above the cathode. Electrical connections are made and the argon supply to the bottom of the cell (which keeps the melt stirred and prevents local thorium depletion at the cathode) switched on. Electrolysis is begun at 12 amp/cm^2 and furnace heating is reduced to maintain a steady temperature of 700°C. When 80% of the thorium has been deposited the current is halved, and when 95% of the thorium has been deposited the current is further reduced by a factor of three. Electrolysis is stopped when analysis of dip samples of the melt shows it to be stripped of thorium.

27. The thorium deposit is generally non-adherent to the cathode and most of it falls off onto the catch plate.

Recovery of metal from the cathode deposit

Leaching

28. The simplest method of freeing thorium metal from the water-soluble entrapped salts is leaching in water. The metal deposit is broken free from the cathode and catch-plate, broken into comparatively small pieces, and leached by rotating with water in a tumbling barrel type of leaching tank. The tumbling action tends to break up the pieces and expose the salt trapped between the metal crystals so that it may be leached out. For heavy metals such as thorium, this type of leaching is far more effective than methods in which the metal is placed in a stationary tank and stirred by an impeller. When the metal appears to be free from salt the rotation of the leaching tank is stopped, the metal crystals allowed to settle, and the leach liquid decanted and replaced by fresh water. Washing is continued until the spent wash water is free from chloride ions. The crystals are then washed in 5% nitric acid, and finally several times with water.

Elutriation

29. Elutriation may be used either as an alternative to leaching or subsequent to leaching for removing lighter impurities such as thoria, carbon and small particles of refractory from the already leached metal. Normal practice is to use the latter method. The metal is placed at the bottom of a long vertical tube up which water is passed at a velocity such that while the thorium metal crystals will settle through it light impurities are floated out to waste. If desired, the water velocity may be adjusted so that the small percentage of very fine thorium powder, which contains a disproportionately large percentage of the impurities, is also floated off. Elutriation can be very effective for increasing the purity of the metal.

Drying

30. The safest method of drying thorium, as with similar reactive metals, is vacuum drying.

Quality of Thorium and Efficiency of Operation

Purity

31. Analyses of thorium metal are given in Table I for a typical batch made from a catalysed conversion, the average of a series of nine consecutive batches made from melts produced by the bonded carbon route, and the best batch made by the latter route. For comparison, the analysis of a typical batch of thorium powder made by the calcium reduction of thoria is given(3).

---

(3) Finniston, H. M., 3rd Rassegna Internazionale Ellettronica - Nucleare Rome (1956).

Table I

Analysis of thorium metal

Results in ppm except where otherwise stated

Type of metal → / ↓ Element	Run 70 B From catalysed conversion	Average of 9 From bonded carbon route	Run 100 B Best bonded carbon route	From calcium reduction of thoria(3)
Th %	99.8	99.81	99.85	
O %	0.08	0.09	0.05	0.2-0.3
C ppm	50	105	70	400
B	< 0.2	< 0.2	< 0.2	
Cd	< 0.2	< 0.2	< 0.2	
Li	0.8	0.5	0.3	
Ca	140	135	110	280
Cl	600	440	400	
Fe	49	< 10	< 10	170
Ni	5	1	< 1	
N	35	20	31	130
Si	85	150	200	
Al	< 10	< 10	< 10	< 200
Mo	35	20	20	
K	10	45	40	
Na	100	90	50	

32. Except for its higher chlorine content the electrolytic thorium is much purer than that made by the calcium reduction of thoria.

33. The carbon probably occurs as free carbon trapped in the thorium crystals, and derives from traces of free carbon left in the melt after chlorination. The most serious impurities in the electrolytic metal are silicon and chlorine, particularly the latter. The silicon comes from attack of the refractories in the cell by the thorium metal.

34. Removal of chlorine to below about 400 ppm has proved very difficult. It has not been established in what form the chlorine occurs in the metal. Various special leaching techniques using a variety of complexing and desorbing reagents, both at room temperature and at temperatures approaching 100°C have been tried, but have not significantly reduced the chlorine content. The chlorine can be removed completely, however, by arc-melting the metal.

Particle size

35. The particle size distribution of a typical batch of thorium crystals is given in Table II (Thorium made by the calcium reduction of thoria nearly all passes a 300 mesh B.S. sieve).

Density

36. The true densities of thorium crystals of different mesh sizes are given in Table II, both as mean results of a series of ten consecutive batches and as results for the best batch. Since the true X-ray density of thorium is 11.72 $g.cm^{-3}$, these figures show that the thorium must be of very high purity. Poured and tapped densities averaged 4.0 and 4.7 $g.cm^{-3}$ respectively.

Table II

Particle size distribution and true densities of thorium crystals

Particle size range microns	Mesh fraction B.S. mesh	Abundance wt.%	Mean density of 10 batches g. cm^{-3}	Density of best batch g.cm^{-3}
> 853	+18	18	11.62	11.67
295-853	-18 +52	40	11.62	11.66
152-295	-52 +100	22	11.60	11.62
53 -152	-100 +300	17	11.57	11.62
< 53	-300	2	11.44	11.59

Efficiency

37. A block flowsheet for the whole process, using the bonded carbon route for chlorination, is given in figure 3, showing the efficiencies of each stage and the amount recycled. The single cycle efficiency is 90%, but the actual loss from the system is very small, and almost all of the remaining 10% may be simply recycled.

Discussion

38. The process described in this paper has been demonstrated to produce high purity thorium metal at high efficiency. With the exception of the chlorine content the metal has a higher purity than that produced by any commercial process. The chlorine may be removed by melting.

39. In common with other electrowinning techniques this process uses no reducing agent other than electric current, which is relatively very cheap. It has the further advantage of introducing no impurities into the metal.

40. With the exception of the anodic conversion cell, which is currently under investigation on a laboratory scale, all stages of the process have been studied in considerable detail on a pilot plant scale. The results obtained to date, particularly regarding such points as the purity of the final metal, the feasibility of semi-continuous operation, and the high efficiencies already achieved, suggest that the route offers promise economically. It is to be expected that, in common with processes of a like nature, large scale plant operation should lead to improved results in several aspects, such as in power economy and metal purity.

Acknowledgements

41. The authors would like to thank the United Kingdom Atomic Energy Authority for permission to publish an account of this work, and the firm of Messrs. Impregnated Diamond Products Ltd., Gloucester, for providing experimental facilities for carrying out a major part of the investigation of this process.

FIG. 1. APPARATUS FOR CHLORINATION

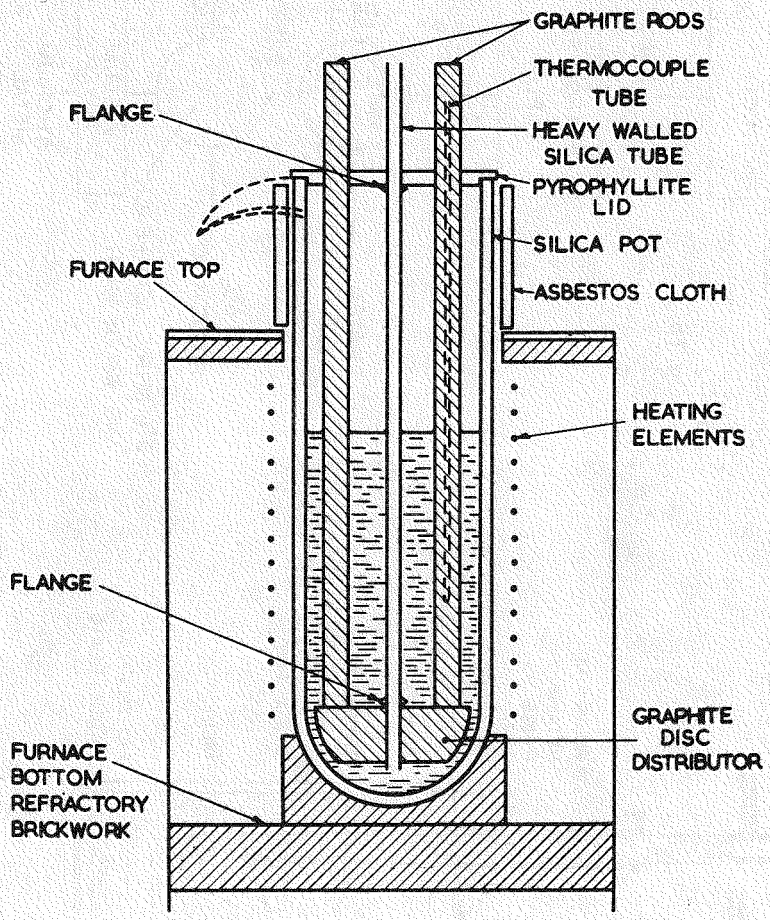

FIG. 2. THORIUM ELECTROLYSIS CELL

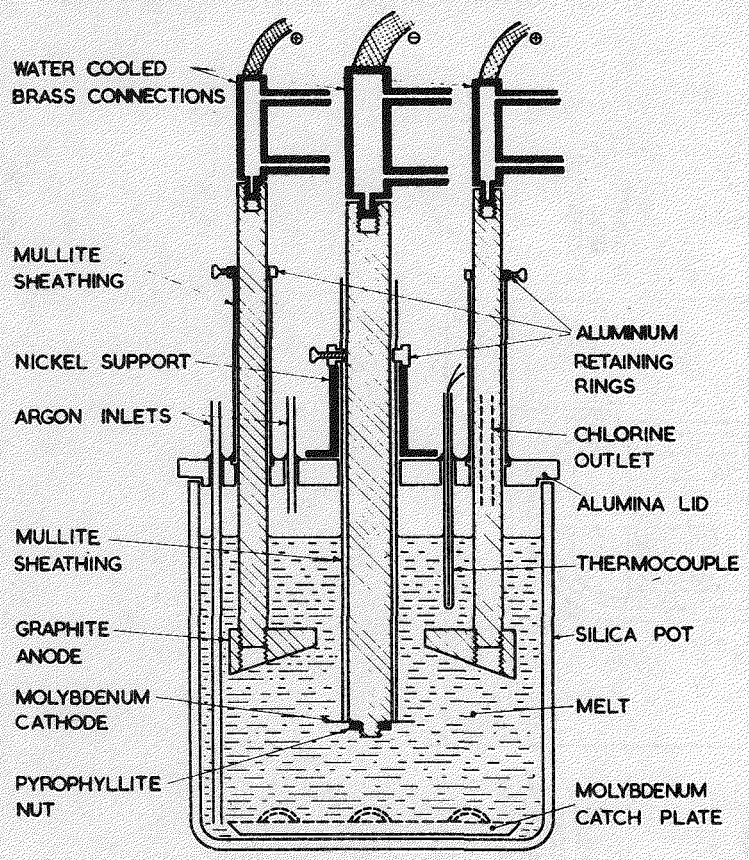
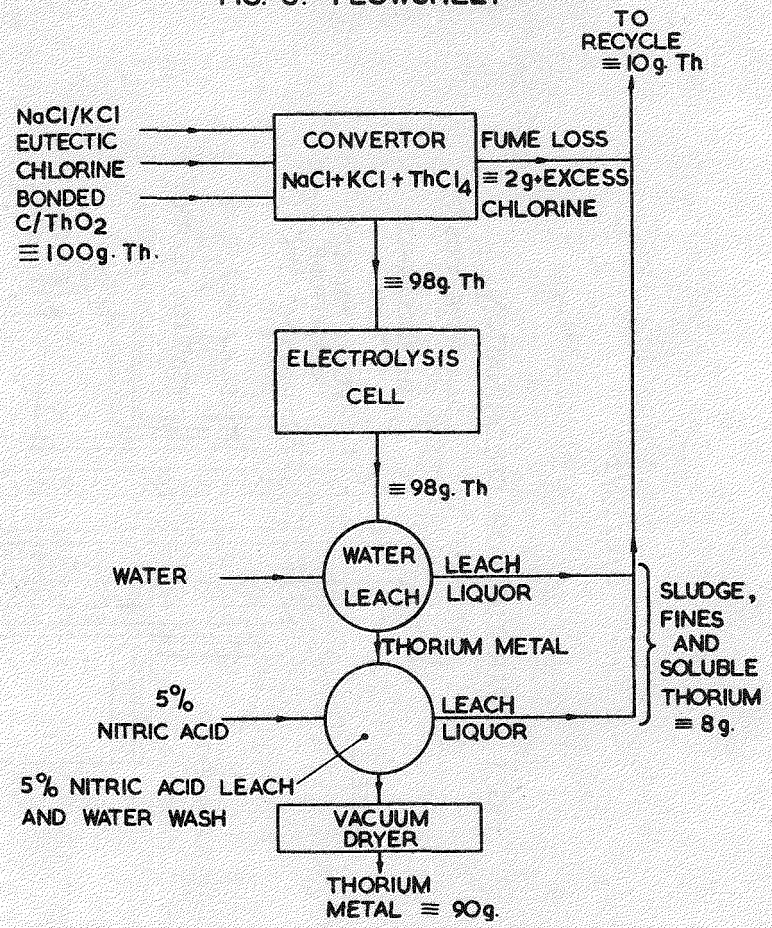
FIG. 3. FLOWSHEET