UCRL-5649

UNIVERSITY OF CALIFORNIA
Lawrence Radiation Laboratory
Livermore, California

Contract No. W-7405-eng-48

A LARGE BAKEABLE VACUUM VALVE

Thomas H. Batzer

August 6, 1959

Printed for the U. S. Atomic Energy Commission

614 001

DISCLAIMER

This report was prepared as an account of work sponsored by an agency of the United States Government. Neither the United States Government nor any agency Thereof, nor any of their employees, makes any warranty, express or implied, or assumes any legal liability or responsibility for the accuracy, completeness, or usefulness of any information, apparatus, product, or process disclosed, or represents that its use would not infringe privately owned rights. Reference herein to any specific commercial product, process, or service by trade name, trademark, manufacturer, or otherwise does not necessarily constitute or imply its endorsement, recommendation, or favoring by the United States Government or any agency thereof. The views and opinions of authors expressed herein do not necessarily state or reflect those of the United States Government or any agency thereof.

DISCLAIMER

Portions of this document may be illegible in electronic image products. Images are produced from the best available original document.

A Large Bakeable Vacuum Valve*

By THOMAS H. BATZER, Mechanical Engineer
Lawrence Radiation Laboratory, University of California
Livermore, California

ABSTRACT

The development and design of a large bakeable valve based on a unique seat arrangement and a novel motion seal are described.

The seat sealing is accomplished through the use of high pressure fluid actuation of an annular pinch gasket. Experimental data on seat closure performance, and the specific design features to achieve successful closures, are presented.

The bakeable motion seal utilizes a stainless steel bellows sleeving over an inner concentric actuating shaft. This shaft is bent at 90° to the axis of rotation and is free to rotate relative to the bellows. There is no apparent size limitation to this type of actuation.

The design of a 10-inch gate valve utilizing these principles is described.

* This work was done under the auspices of the U. S. Atomic Energy Commission.

A Large Bakeable Vacuum Valve*

By THOMAS H. BATZER, Mechanical Engineer
Lawrence Radiation Laboratory, University of California
Livermore, California

The techniques necessary to achieve ultra-high vacuum in large, all-metal systems are fairly well developed. However, the usefulness of these systems for experimental physics purposes has been limited by the lack of a reliable valve of large conductance.

To be compatible with both the ultra-high vacuum system and the experiments the valve should meet certain requirements:

1. It should withstand bakeout open or closed to at least 400°C.
2. It should allow mounting in any position.
3. The number of closures should not be limited by the design.
4. The motion seal should be positive.
5. The conductance-to-volume ratio should be large.
6. The closed conductance should indicate no response on a mass spectrometer leak detector at the desired operating pressure.
7. Closing and opening time should be as small as possible consistent with simple mechanisms.

A valve seat and motion seal meeting these requirements were developed and incorporated into the all-metal, gate valve design shown in Fig. 1. The valve closure is a version of the inflatable bladder seal. Figure 2 shows a subassembly of the seal with the valve gate in the closed position. The annular diaphragm or "bladder" consists of a ring of 0.032-inch-thick OFHC copper sheet. The sheet is clamped vacuum-tight

by two stainless steel rings against a third to form a diaphragm. The vacuum-tight seals are of the Westinghouse-developed,[1] stepped-flange type. The sealing surface of the valve gate is brought to bear without force against the copper diaphragm. The sealing force is then applied by fluid pressure on the diaphragm pressing it uniformly against the valve gate to make a vacuum-tight closure. It should be noted that the gate-actuating mechanism does not supply the sealing force, but merely places the gate in a locked position against the diaphragm.

Figure 3 shows the motion-seal subassembly. The seal is all stainless steel and positive, that is, it does not depend on close running fits between rotating and stationary parts. The seal consists of a welded assembly, including the stepped flange, bellows and closed tube. Into this is inserted the bent shaft, followed by the bearing and retainer. The shaft is free to rotate relative to the bellows assembly, permitting external motion to actuate the internal mechanism.

Figure 4 shows the section lengthwise through the middle of the valve. The installation of the motion seal, the valve seat, and the gate in closed position, can be seen. The calculated open conductance of this valve which has a 10-inch diameter opening is 4000 liters per second. It should be noted that the two plates that form the valve body are vacuum-sealed by

---

[1] D. Alpert, J. H. Carmichael, W. J. Lange, and E. A. Trendelenburg, "Progress Report — Ultra-High Vacuum Techniques," Westinghouse Research Laboratories (Pittsburgh, Penna.) Research Report 100FF1054-R1, December 31, 1956.

welding. The alignment and load-bearing members are spacers bolted to the two plates. The valve is designed to allow complete disassembly, with the exception of the spacers, without breaking the seal weld.

A plan view of the valve with the top plate removed is shown in Fig. 5. The mechanism is designed to carry the gate from the retracted position into the opening where it contacts a locating stop. At this point the gate-carrier moves on under the gate, forcing it up the inclines at 90° to the original direction of motion where it comes to rest against the sealing diaphragm. Further motion of the gate-carrier serves to block the gate against the sealing pressure of the fluid on the diaphragm.

The gate-carrier travels in retaining grooves and the gate is spring-loaded to it by means of two long Inconel-X bars cantilevered from the far end. The spring bars have a preload sufficient to allow the valve to be mounted in any position without fear of the gate falling away from the gate-carrier. A further function of the spring bars is to guide the travel of the gate.

The current design calls for steel needle bearings in the actuating mechanism. These will be installed dry and unlubricated with the possible exception of molybdenum disulphide powder. Where metal-to-metal rubbing occurs, molybdenum strips will be installed. It is expected that bake-out tests will uncover bearing difficulties. Other bearing materials under consideration are aluminum oxide, boron nitride, and sapphire.

The development work done to date has been confined to the diaphragm seat and the motion seal. An assembly, very similar to that in Fig. 2, was made to determine the feasibility of the valve seat. The gate

was held in place by a plate bolted to the seat assembly. Figure 6 is a photograph of the test setup which includes the vacuum connection, the fluid pressure line, and pump. As this system was machined from mild steel, no bakeout tests were made.

There were, however, 17 different diaphragm seats vacuum-tested. Nine of the tests were successful, including the last six. The materials tested successfully were of OFHC copper (plain and gold-plated) and nickel.

The vacuum system on which the tests were made had an ultimate pressure of 5×10^{-7} Torr. A closure was considered successful when the pressure approached closely the system ultimate and there was no response on the CEC Model 24-101A leak detector after bagging the closure with helium for five minutes.

The seat is not sensitive to location of the gate relative to the diaphragm. The gate was rotated 90° relative to the diaphragm between each of 12 successful closures on test number 12. This test was terminated without failure. The total number of closures to be expected will be determined on the operational valve. The average pressure necessary for a seal is about 6000 psi. Figure 7 is a cross section of a used diaphragm showing the pinch seals and the gate seat.

As previously mentioned the bakeout tests will undoubtedly uncover difficulties, but it is felt that the design is feasible and can be made operational.

/ro

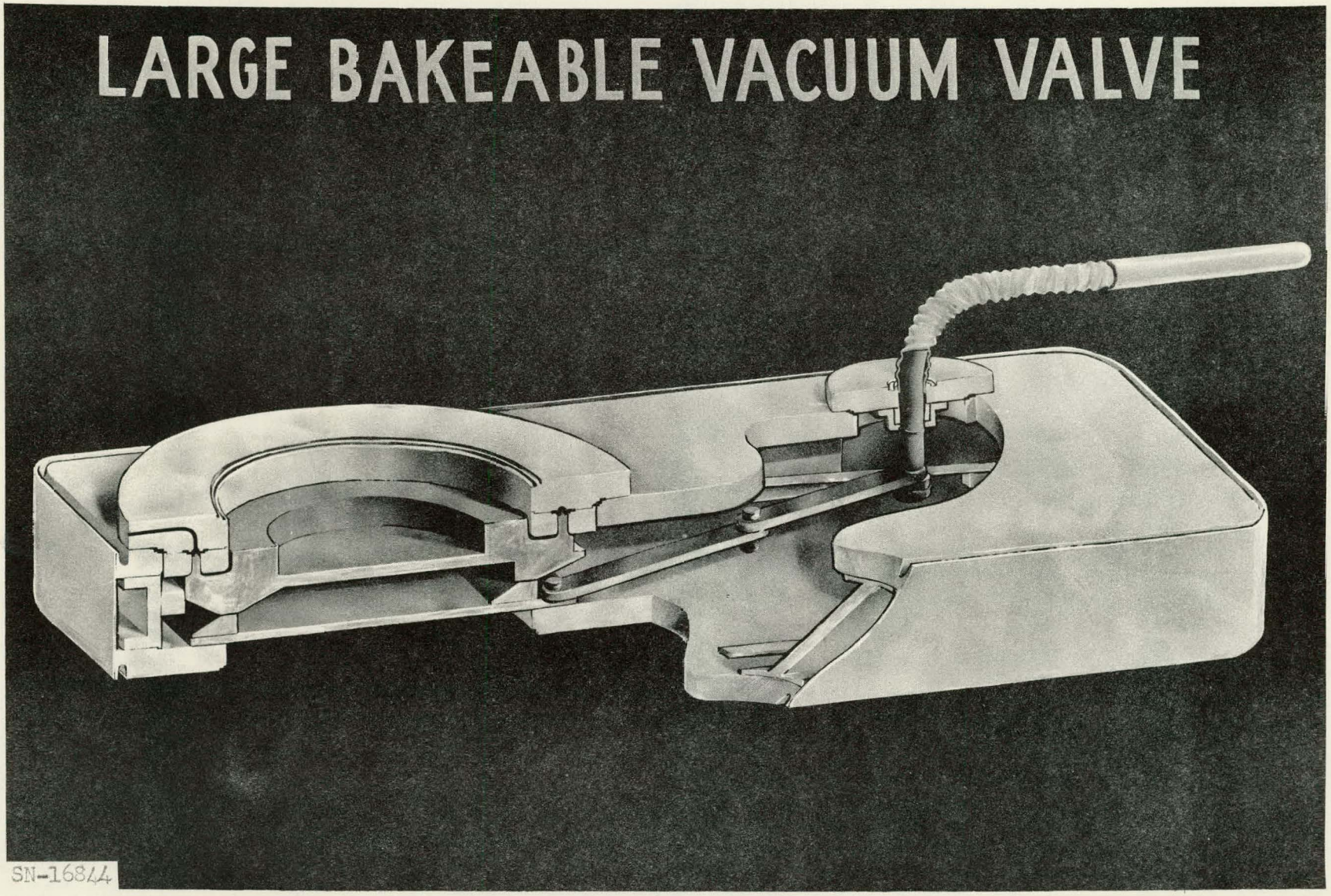

Fig. 1. Isometric assembly of large bakeable valve.

614 008

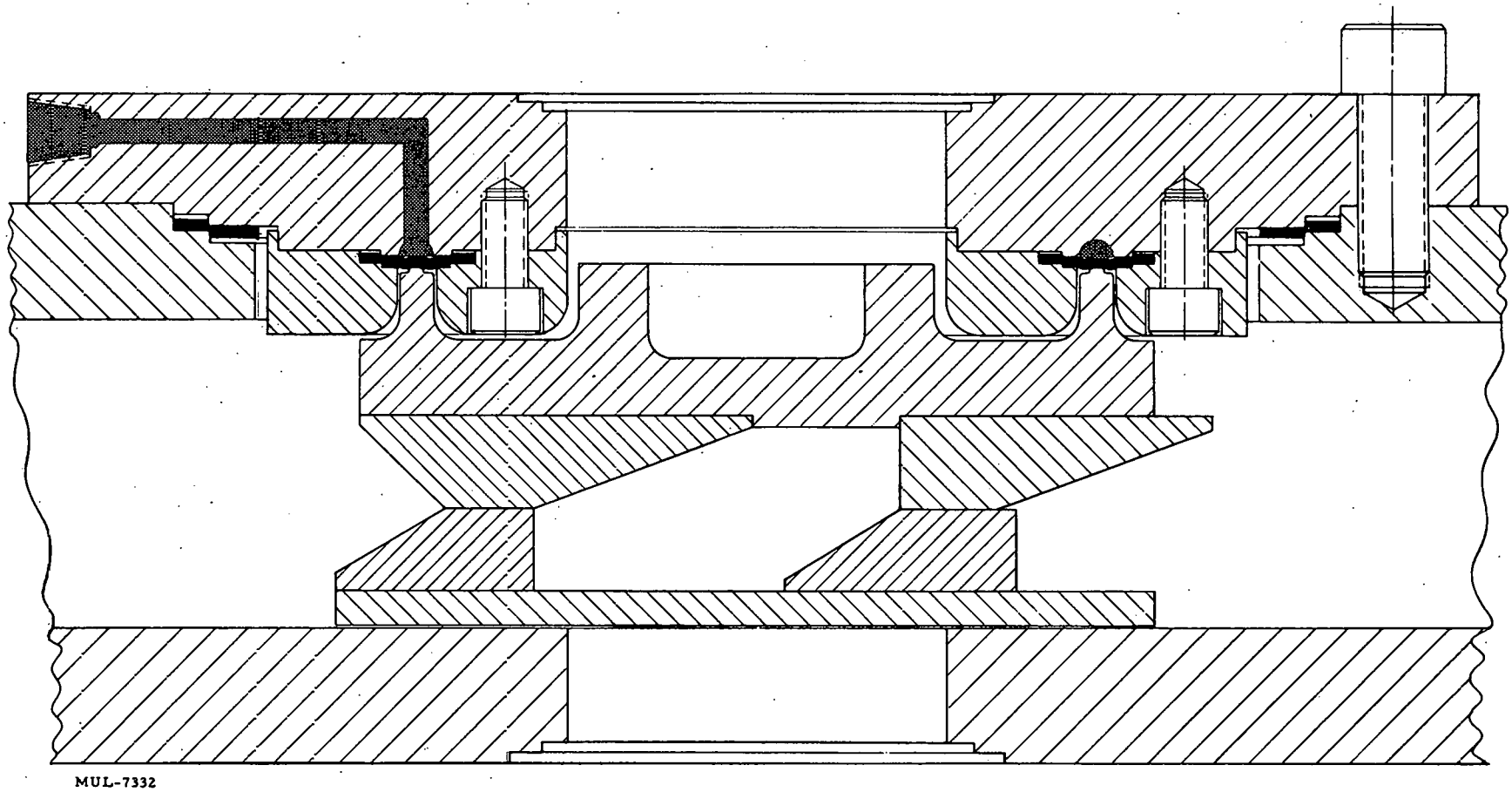

Fig. 2. Valve seat and gate.

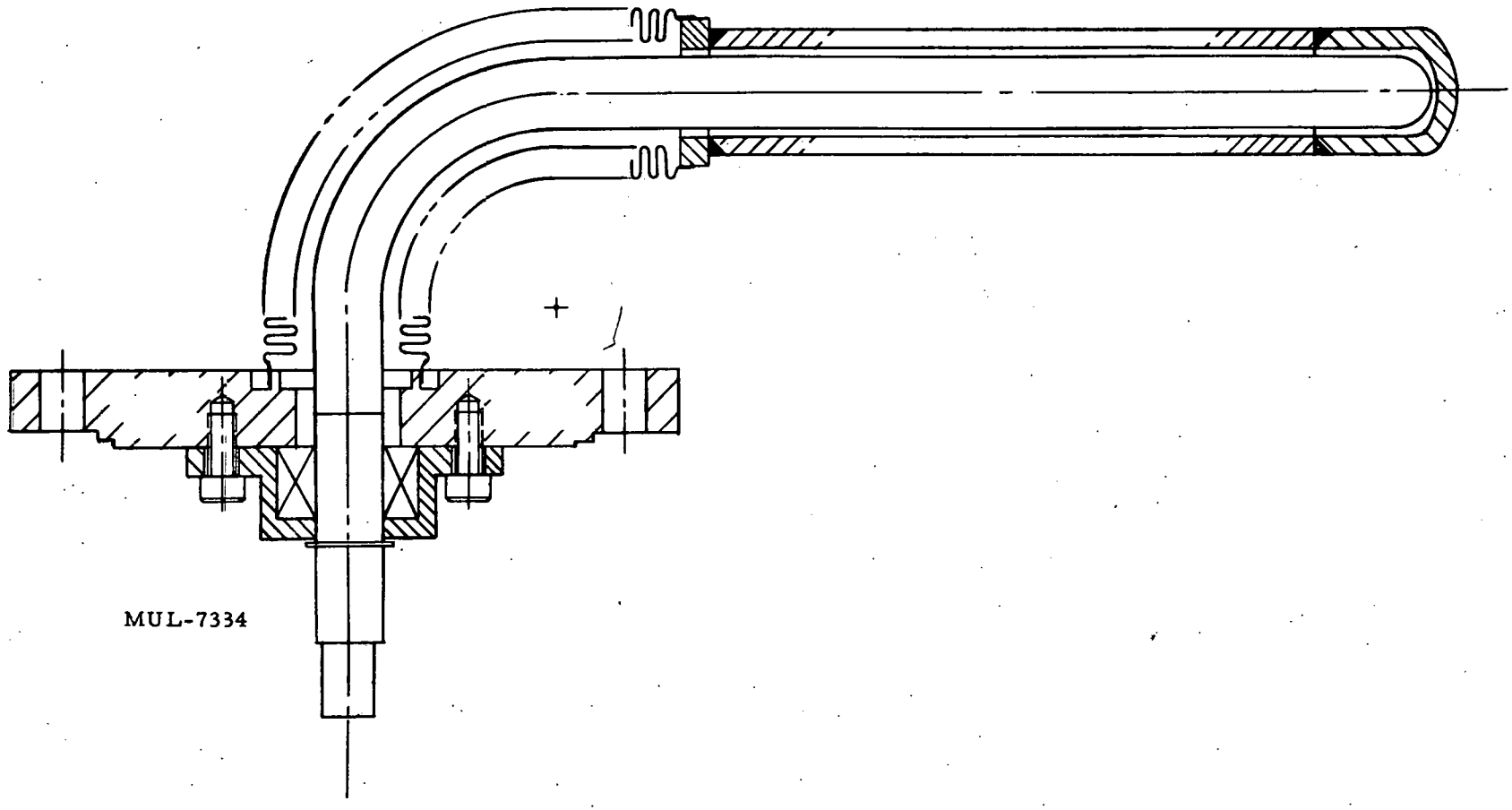

Fig. 3. Motion-seal subassembly.

014 017

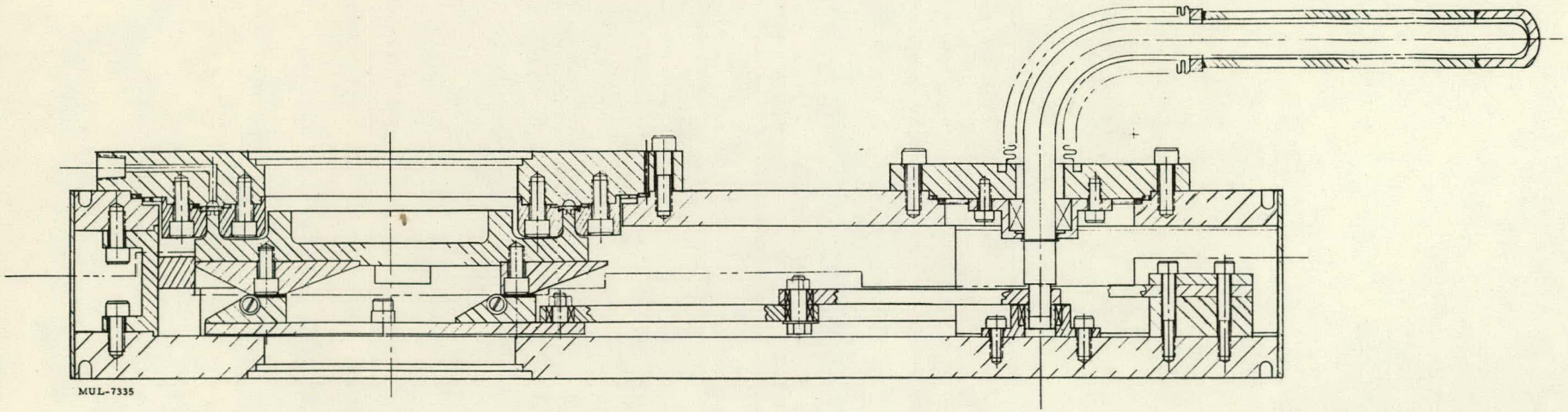

Fig. 4. Longitudinal section of bakeable valve.

614 010

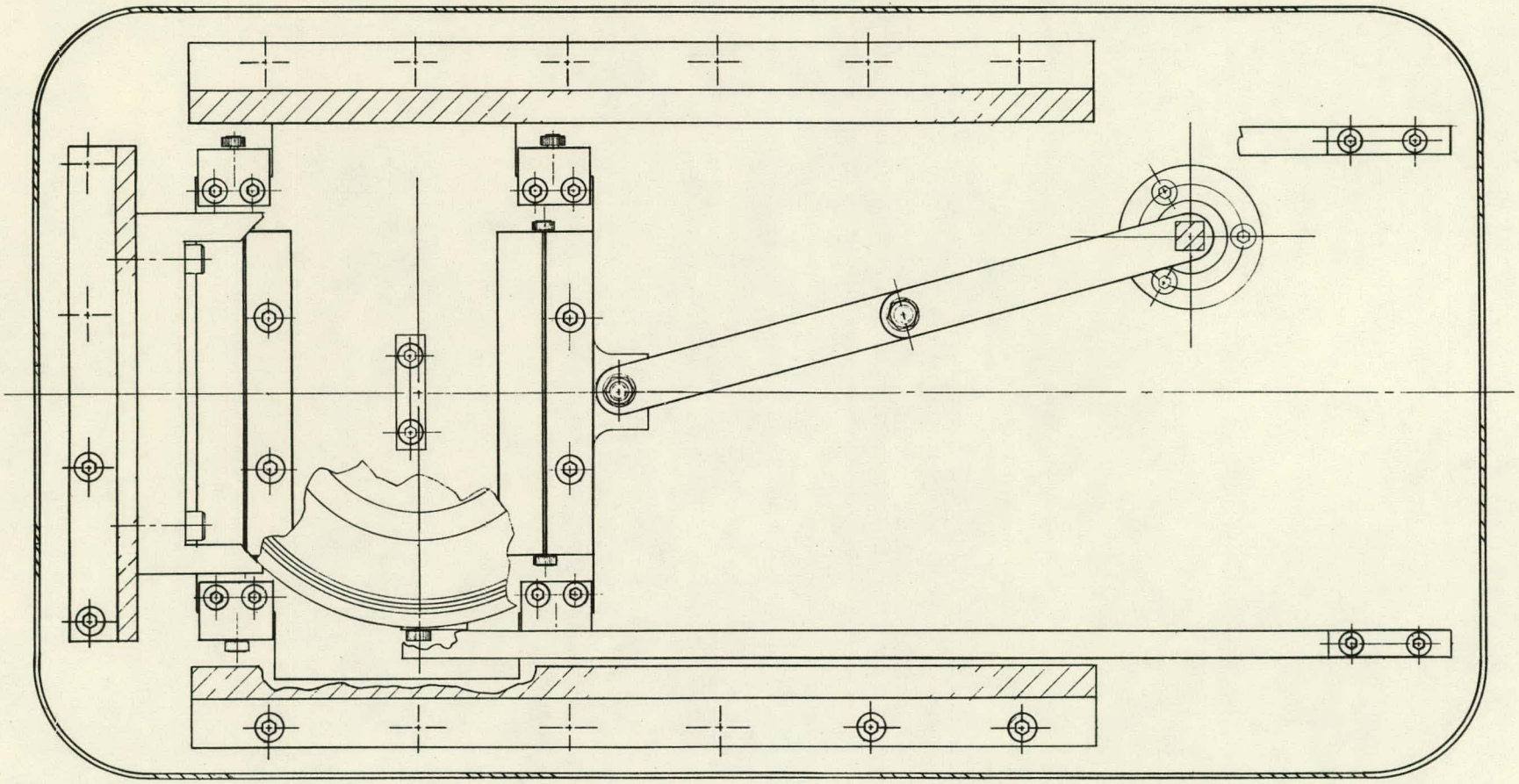

MUL-7336

Fig. 5. Plan view of valve (with top plate removed).

014 715

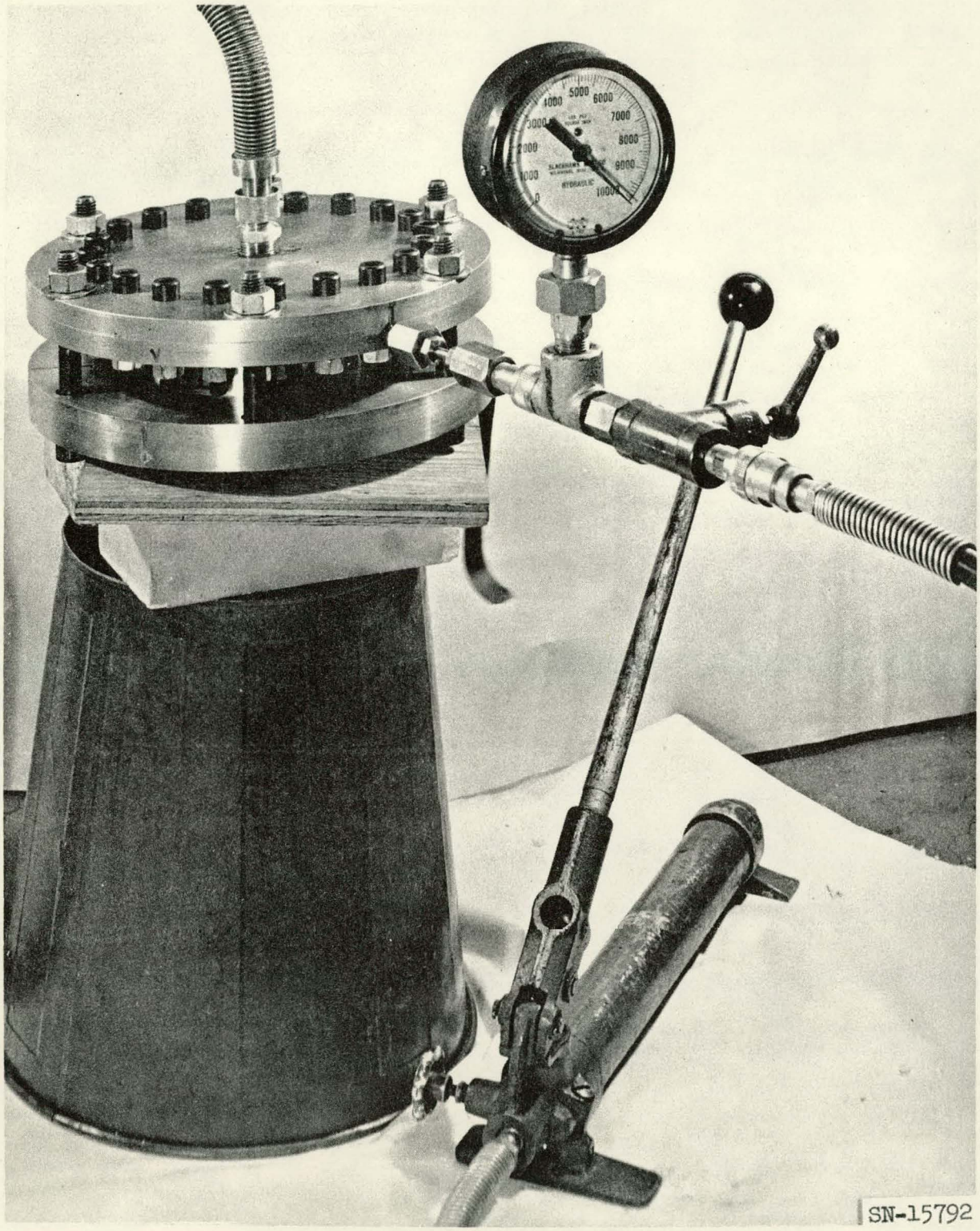

Fig. 6. Valve seat test setup.

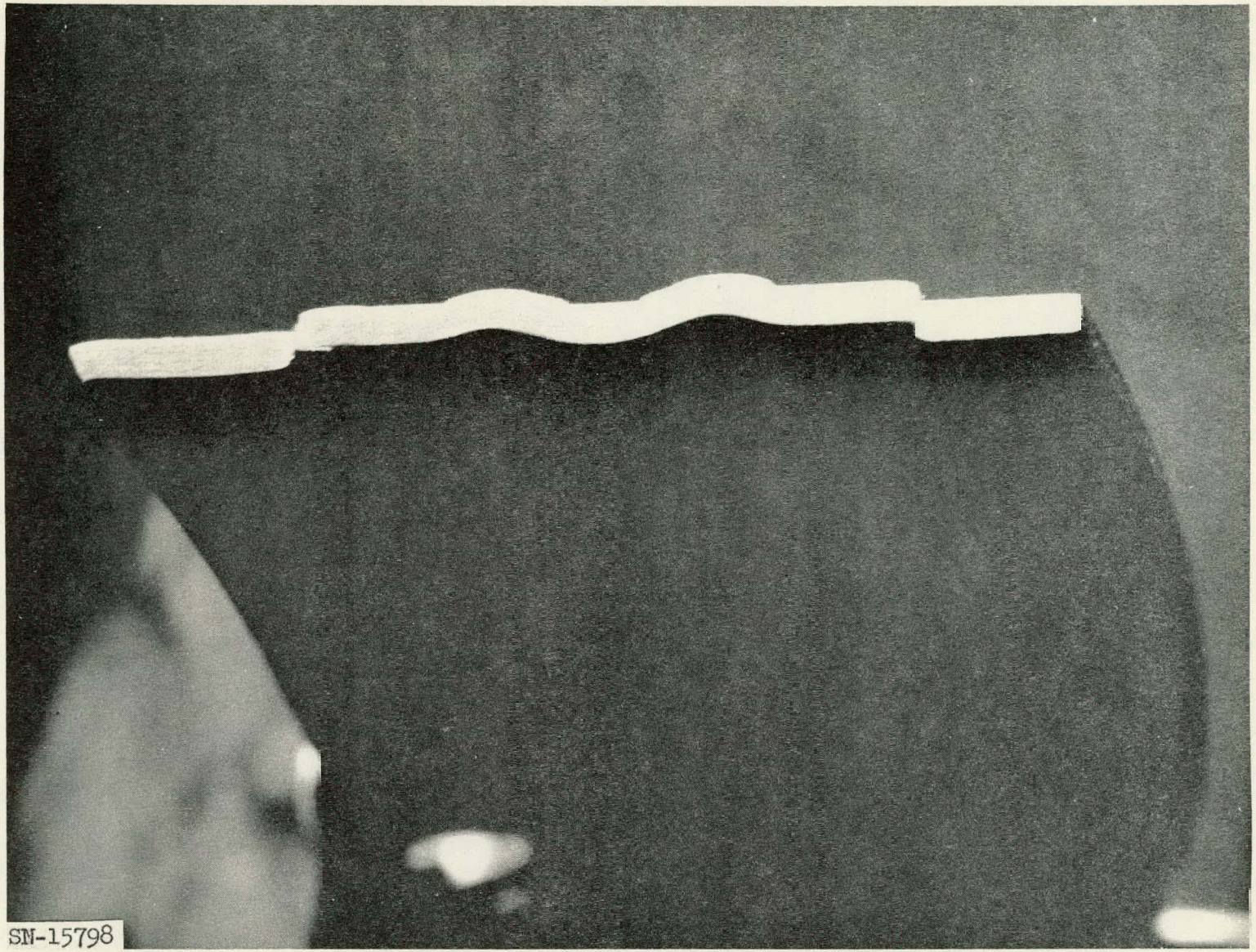

Fig. 7. Diaphragm cross section.

614 710