CONF-9510242--

FLYWHEEL ENERGY STORAGE WORKSHOP

October 31 — November 2, 1995
Oak Ridge, TN

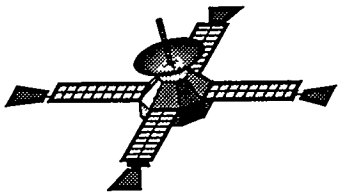

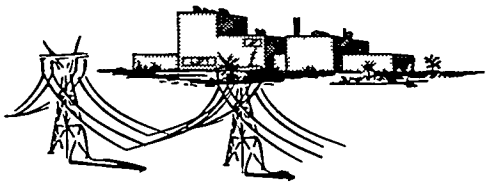

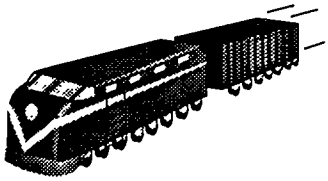

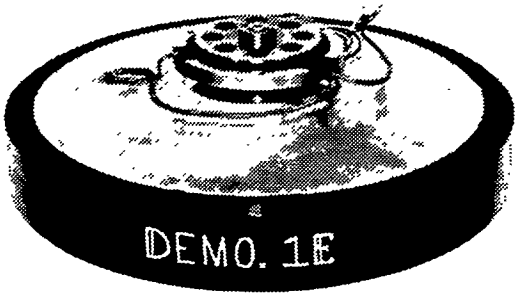

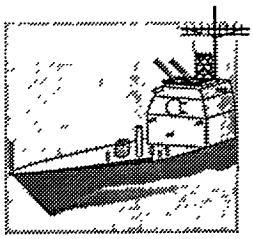

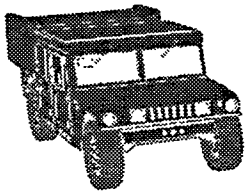

ARPA
Advanced Research Projects Agency
Advanced Systems Technology Office

Sponsored by:

DOE
Department of Energy
Office of Transportation Technologies

Hosted by:
ORNL
Oak Ridge National Laboratory

CONF-9510242--

FLYWHEEL ENERGY STORAGE WORKSHOP

Compiled by

David O'Kain
Joyce Carmack

Sponsored by:

ARPA
Advanced Research Projects Agency
Advanced Systems Technology Office

DOE
Department of Energy
Office of Transportation Technologies

Hosted by:
ORNL
Oak Ridge National Laboratory

Prepared by the
Oak Ridge National Laboratory
Oak Ridge, TN 37831
managed by
Lockheed Martin Energy Systems, Inc.
for the
U.S. DEPARTMENT OF ENERGY
under Contract No. DE-AC05-84OR21400

Table of Contents

FLYWHEEL ENERGY STORAGE WORKSHOP
Oct. 31 - Nov. 2, 1995
Oak Ridge, Tennessee

BACKGROUND

Since the November 1993 Flywheel Workshop, there has been a major surge of interest in Flywheel Energy Storage. Numerous flywheel programs have been funded by the Advanced Research Projects Agency (ARPA), by the Department of Energy (DOE) through the Hybrid Vehicle Program, and by private investment. Several new prototype systems have been built and are being tested. The operational performance characteristics of flywheel energy storage are being recognized as attractive for a number of potential applications. Programs are underway to develop flywheels for cars, buses, boats, trains, satellites, and for electric utility applications such as power quality, uninterruptible power supplies, and load leveling. With the tremendous amount of flywheel activity during the last two years, this workshop should again provide an excellent opportunity for presentation of new information.

WORKSHOP PURPOSE

This workshop is jointly sponsored by ARPA and DOE to provide a review of the status of current flywheel programs and to provide a forum for presentation of new flywheel technology. Technology areas of interest include flywheel applications, flywheel systems, design, materials, fabrication, assembly, safety & containment, ball bearings, magnetic bearings, motor/generators, power electronics, mounting systems, test procedures, and systems integration. Information from the workshop will help guide ARPA & DOE planning for future flywheel programs.

LOCATION

This workshop was help at the Pollard Auditorium in Oak Ridge, Tennessee.

CHAIRMAN

Dave O'Kain
Oak Ridge National Laboratory
P. O. Box 2009
Bldg. 9108, MS 8088
Oak Ridge, TN 37831-8088
Phone: (423) 576-0268
Fascimile: (423) 574-2102
okaindu@ornl.gov

Flywheel Energy Storage Workshop
Oak Ridge, TN
Tuesday, October 31, 1995

7:30 a.m.	Registration/continental breakfast in Pollard Lobby		
8:30 a.m.	Dave O'Kain	Oak Ridge National Laboratory	Welcome
8:35 a.m.	Ron Hultgren	Department of Energy - Oak Ridge Operations	Welcome
8:40 a.m.	Ro Sullivan	Department of Energy - Headquarters	Opening Remarks
8:50 a.m.	John Gully	Advanced Research Projects Agency	Opening Remarks
9:00 a.m.	Don Bender Dick Post	Lawrence Livermore National Laboratory	Electromechanical Battery Research and Development at LLNL
9:30 a.m.	Mike Bowler	Trinity Flywheel Batteries, Inc.	Review of Power Electromechanical Battery Development
10:00 a.m.	Break		
10:30 a.m.	Joe Olbermann	Unique Mobility, Inc.	Flywheel Development at Unique Mobility
11:00 a.m.	John McKeever	Oak Ridge National Laboratory	Flywheel Development Activities at ORNL
11:30 a.m.	Don Adams	Oak Ridge National Laboratory	Technology Advances in Power Electronics at ORNL
12:00 Noon	Lunch at Garden Plaza		
1:30 p.m.	Joe Tecza	Mechanical Technology, Inc.	Design and Operation of a Flywheel Energy Storage Demonstration System
2:00 p.m.	Gary Colella	SatCon Technology Corporation	SatCon's Flywheel Energy Storage Systems -- Commercial UPS to Race Cars
2:30 p.m.	Wei-Kan Chu	University of Houston	Hybrid Superconducting Magnetic Bearing and its Frictional Energy Loss in Flywheel Applications
3:00 p.m.	Break		
3:30 p.m.	Kelly Dagenhart	Oak Ridge National Laboratory	Feasibility Study of the Application of Flywheel Energy Storage at Gaseous Diffusion Plants
4:00 p.m.	Ken Uherka	Argonne National Laboratory	Experimental Test Facility for Flywheel Energy Storage Utilizing Superconducting Magnetic Bearings
5:30 p.m. - 7:00 p.m.	Reception at Garden Plaza		

Flywheel Energy Storage Workshop
Oak Ridge, TN
Wednesday, November 1, 1995

7:30 a.m.	Registration /continental breakfast in Pollard Lobby		
8:00 a.m.	Joe Beno John Price	University of Texas	Flywheel Energy Storage System Development at The University of Texas Center for Electromechanics
8:30 a.m.	Lew Sibley	Tribology Systems	Advanced Technology Ceramic Bearings in the Flywheel Systems at World Flywheel Consortium
9:00 a.m.	Hao Huang	SL Montevideo Technology, Inc.	High Power Density and High Efficiency Electro-Mechanical Conversion System for Flywheel Storage Applications
9:30 a.m.	Gerhard Reiner	Magnet-Motor, GmbH	Current State in the Application of Magnetodynamic (Flywheel-) Storage Systems in Urban Transport Buses
10:00 a.m.	Break		
10:30 a.m.	David Maass	Dow-UT	Developments in Polar Woven Composite Flywheels
11:00 a.m.	Tom Luhman	Boeing	Advanced Technology for Flywheel Energy Storage
11:30 a.m.	Robert Weissbach	Arizona State University	Evaluation of Flywheel Battery Feasibility for Replacement of Electrochemical Batteries at a Utility Substation
12:00 Noon	Lunch at Garden Plaza		
1:30 p.m.	Christian Harris	TRW	Flywheels for Spacecraft Energy Storage and Attitude Control
2:00 p.m.	James Wehner	TRW	Spacecraft System Requirements for Flywheel Energy and Momentum Storage
2:30 p.m.	Doug Thorpe	Thortek	Thortek's Low Cost Flywheel Energy Storage Systems
3:00 p.m.	Break		
3:30 p.m.	Crawford Meeks	AVCON Magnetic Bearings	Highly Efficient Magnetic Bearings for Energy Storage Flywheels
4:00 p.m.	Pat Clarke	Clarke Associates	Uninterruptible Power System [UPS] with Super Synchronous Motor/Generator Flywheel Energy Storage
4:30 p.m.	Chris Gabrys	Penn State University	Advanced Flywheel Design, Fabrication and Testing at Penn State University

Flywheel Energy Storage Workshop
Oak Ridge, TN
Thursday, November 2, 1995

7:00 a.m. - 7:45 a.m.	Continental Breakfast at Garden Plaza
7:50 a.m.	Load Buses in front of Garden Plaza
8:00 a.m.	Buses depart from Garden Plaza for facility tours Tour A - Flywheel Spin Test Facility (K-25), then Centers for Manufacturing Technology (Y-12) Tour B - Centers for Manufacturing Technology (Y-12), then Flywheel Spin Test Facility (K-25)
Approx. 12:30 p.m..	Buses return to Garden Plaza

FLYWHEEL ENERGY STORAGE WORKSHOP
Oak Ridge, Tennessee
Thursday, November 2, 1995

TOUR

7:30 Group assembles at the Garden Plaza Hotel

8:00 Buses depart for Tours

GROUP ONE

(Guide: Dave Howell)

Y-12 Site

8:15 Oak Ridge Centers for Manufacturing Technology Overview - Display Room ..... Wayne Manges

8:40 Concurrent Engineering Overview ..... Ken Chipley

9:00 - 11:00:

9201-3 Motor Diagnostics ..... Harry Meyer

9204-1 Composites Durability ..... Jim Corum & Rick Battiste

9204-1 Composite Lab ..... Bob Norris

9725 Composite Lab ..... John Shaffer

11:05 Bus departs for K-25

K-25 Site

11:15 Flywheel Demonstration Facility ..... John McKeever

12:10 Bus returns to Garden Plaza

FLYWHEEL ENERGY STORAGE WORKSHOP
Oak Ridge, Tennessee
Thursday, November 2, 1995

TOUR

GROUP TWO

(Guide: Dave O'Kain)

K-25 Site

8:20 Flywheel Demonstration Facility ..... John McKeever

9:15 Bus departs for Y-12

Y-12 Site

9:30 Oak Ridge Centers for Manufacturing Technology
Overview - Display Room ..... Wayne Manges

9:50 Concurrent Engineering Overview ..... Ken Chipley

10:15 - 12:10:

9201-3 Motor Diagnostics ..... Harry Meyer

9204-1 Composites Durability ..... Jim Corum & Rick Battiste

9204-1 Composites Lab ..... Bob Norris

9725 Composite Lab ..... John Shaffer

12:10 Bus returns to Garden Plaza

"Technologies to Keep America Moving"©

Flywheel Development at Lawrence Livermore National Laboratory

Presented at:

The Flywheel Energy Storage Workshop
Oak Ridge, TN

October 31, 1995

Donald A. Bender
Project Engineer
Lawrence Livermore National Laboratory

Program background

- Present support
  - Funds-in CRADAs with private industry
    - General Motors, Trinity, Westinghouse
  - Internal R&D
- Previous experience
  - LLNL managed DOE sponsored flywheel program from 1978–1983
  - Rotor burst test and life test
- Future directions
  - Focus on problems of relevance to the flywheel community

Program activities

- System development
- All subsystems relating to flywheel technology
  - Electronics, composite materials, rotor dynamics, bearings, containment
- Special emphasis on two thrust areas:
  - Passive magnetic bearings: levitating and hybrid
  - Rotor burst/containment

The Livermore approach has unique attributes

- All modern flywheels include:
  - High strength composites
  - High performance motor/generators
  - High speed bearings

- The Livermore EMB has novel elements and advantages
  - Halbach array motor → High power, insensitive to gap
  - Passive magnetic bearings → Very long life, no control system

- Systemic approach - the elements work together
  - Motor has structural role → Simplifies composite rotor
  - Unique field configuration → Soft bearings without whirl
  - Ironless design → Reduces power electronics cost
  - Parts count is low

Ambient temperature passive magnetic bearings

- Several combinations of permanent magnet based components
- Non-linear and time varying properties are involved
- Led to development of comprehensive modeling of rotor dynamics
  - Avoid many common simplifications (isotropy, linearity, etc.)
- Demonstrated low loss passive magnetic levitation of small test article
- Developing components for levitating and hybrid bearing systems
- Spin off: linear motion magnetic levitation system

Status of the LLNL Program

- Integrated system testing began in mid-1993
  - Carbon composite rotor, hybrid magnetic/mechanical bearings
  - Operated > 60,000 RPM, > 100 kW (m/g specific power >10kW/kg)
  - Demonstrated ac efficiency > 92% for 100% dod
- Subsystem results
  - Measured ambient temperature passive magnetic levitation
  - Long duration vacuum tests: stable vacuum without pumping
  - Gas gun test used to evaluate containment structures
  - Demonstrated rotor burst and containment at predicted speed
- Goals of the program include:
  - Improved containment technology
  - Impelmentation of magnetic levitation technology

Some findings from containment development

- Surprises from materials testing
  - Kevlar performance unexpectedly poor
- Well behaved burst mechanisms
  - Rotors burst from repeatable mechanism within a speed band ±1%
  - Avoided monlithic fragments with high tangential velocity
  - Forensic examination of bursts yielded good estimate of loads
- Containment response
  - Containment was achieved
  - Axial loads are very important

Approach to rotor burst and containment

- Coupled problem
  - Type of containment required depends strongly on nature of rotor burst
- Strategy
  - Composite rotor design based on specific burst criteria
  - Computational and experimental verification of predicted properties
    - static and dynamic testing
  - Design of containment structure
  - Rotor burst testing
  - Instrumented containment testing
- Execute tests at LLNL and through key vendors
  - Procure some flywheel components and spin test services

Current and planned work on containment

- Ongoing study of the design and control of rotor burst mechanisms
  - Computational and experimental activities
- Greatly expanded study of the response of containment structures
- Draw on LLNL history of nuclear test execution and diagnostics
- Experimental tools and techniques presently in use or available
  - Static rotor and specimen load fixtures, extensive life testing
  - Gas guns
  - High speed photography
  - High bandwidth, multichannel diagnostics (vibration, strain, etc.)
  - Forensic experience, extensive systems for witness probes
  - Multi-frame flash x-rays

Goal: Develop a body of knowledge to serve as a foundation for containment design and make this information available to all interested parties in the domestic flywheel industry at minimal cost and restriction

Summary

- Advances in flywheel system engineering and subsystem technology
- Refocusing activities on technologies relevant to flywheel community
- Significant resources readily available
- Evolving understanding of how to work with industrial partners

Review of Power Electromechanical Battery Development

Presented at:

The Flywheel Energy Storage Workshop
Oak Ridge, TN

October 31, 1995

Mike Bowler
Trinity Flywheel Batteries, Inc.

EMB DEVELOPMENT PHASE 1

- LEARN, OBSERVE, COMPLEMENT LLNL EFFORTS
- ASSIMILATE SYSTEMS VIEW OF FLYWHEEL APPLICATION
- FOCUS ON FUNDAMENTAL ENABLING TECHNOLOGY (ROTOR)
  - DEVELOP SINGLE THICK RING ROTOR (COMPLEMENTS LLNL MULTI-PIECE ROTOR)
  - WORK PROCESS DEVELOPMENT (CONTROL OF FIBER VOLUME AND VOIDS)
  - MANUFACTURE DISCRETE COMPONENTS AND ASSEMBLIES FOR ROTATING FRAME
- WORK TECHNICAL MILESTONES (SPEED, CONTAINMENT)

EMB DEVELOPMENT PHASE 2

- DEFINE, ENGINEER, PRODUCE, QUALIFY, AND OPERATE PRODUCTION-ENABLING ASSETS
- BUILD, OPERATE, AND CHARACTERIZE/TEST MARKET-FOCUSED PROTOTYPES
- QUALIFY DELIVERABLE ARCHITECTURES FOR TARGET MARKETS

TRINITY
FLYWHEEL BATTERIES INC.

ROTOR CONTAINMENT TEST OCTOBER 18, 1995

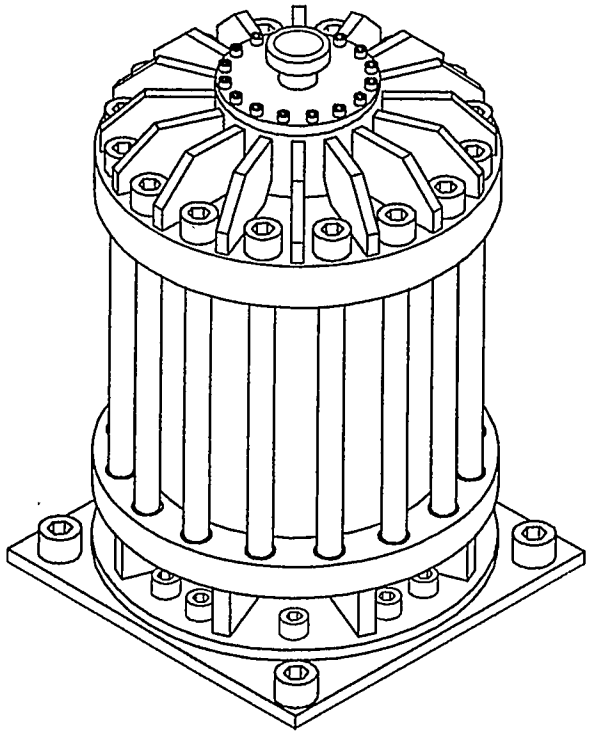

- CONTAINMENT INVERTED FOR TEST, SUSPENDED FROM TEST STAND TOP COVER
- AA7075 ALUMINUM BASE PLATE, DETAILED FOR AXIAL LOAD MITIGATION
- T304/T316 STAINLESS CONTAINMENT WITH HIGH STRENGTH CAPSCREWS
- DESIGN BASIS IS 100% CONTAINMENT, SOME EXPECTATION OF PLASTIC DEFORMATION
- THREE ITERATIONS OF AIR TURBINE DRIVE SHAFT SYSTEM TO MAINTAIN STABLE ACCELERATION TO BURST SPEED
- ROTOR WEIGHT: 60 LB, CONTAINMENT: 420 LB
- INSTRUMENTATION AND ENGINEERING COLLABORATION WITH LLNL
- TEST FACILITY, ROTORDYNAMIC SUPPORT, AND TEST OPERATION/RUN-UP BY TEST DEVICES

TRINITY
FLYWHEEL BATTERIES INC.

ROTOR CONTAINMENT TEST OCTOBER 18, 1995

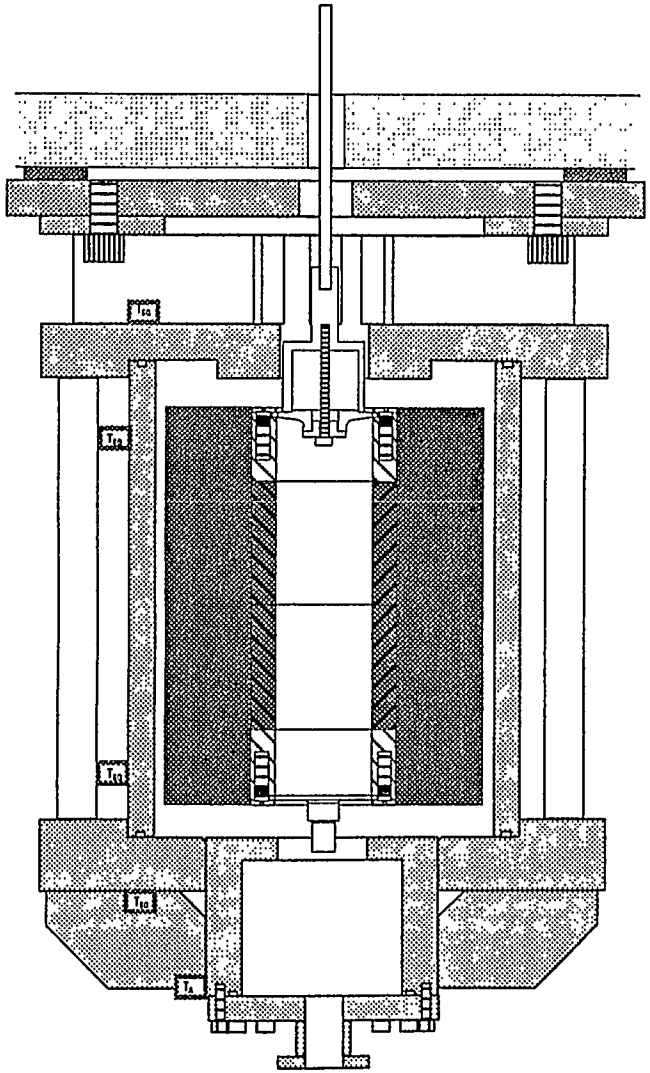

- .25" RADIAL CLEARANCE, .88" AXIAL CLEARANCE
- THIRD ITERATION DRIVE ASSEMBLY WITH .10" RADIAL CLEARANCE TO BASE CL BORE
- ROTOR BREAK-UP AT 62,000 RPM (EXPECTED; PREVIOUS 61,800 RPM AND 63,500 RPM)
- EVENT DURATION ~ 60 SECONDS
- ACOUSTIC TRACK WOULD BE HELPFUL FOR FUTURE TESTING (STRAIN GAGE AND ACCELEROMETER DATA AWAITS ANALYSIS)
- CONTAINMENT VERY WARM TO TOUCH ~ 25 MINUTES AFTER ROTATION STOP
- NO VISIBLE DISTORTION TO CONTAINMENT SHELL MAY BE OUT-OF-ROUND ~ .008"
- EXTENSIVE GOUGING AND TRACKING FROM MASS LOAD CONTACT, EVEN SO, QUITE POSSIBLE CONTAINMENT COULD BE REUSED

TRINITY
FLYWHEEL BATTERIES INC.

ROTOR CONTAINMENT TEST OCTOBER 18, 1995

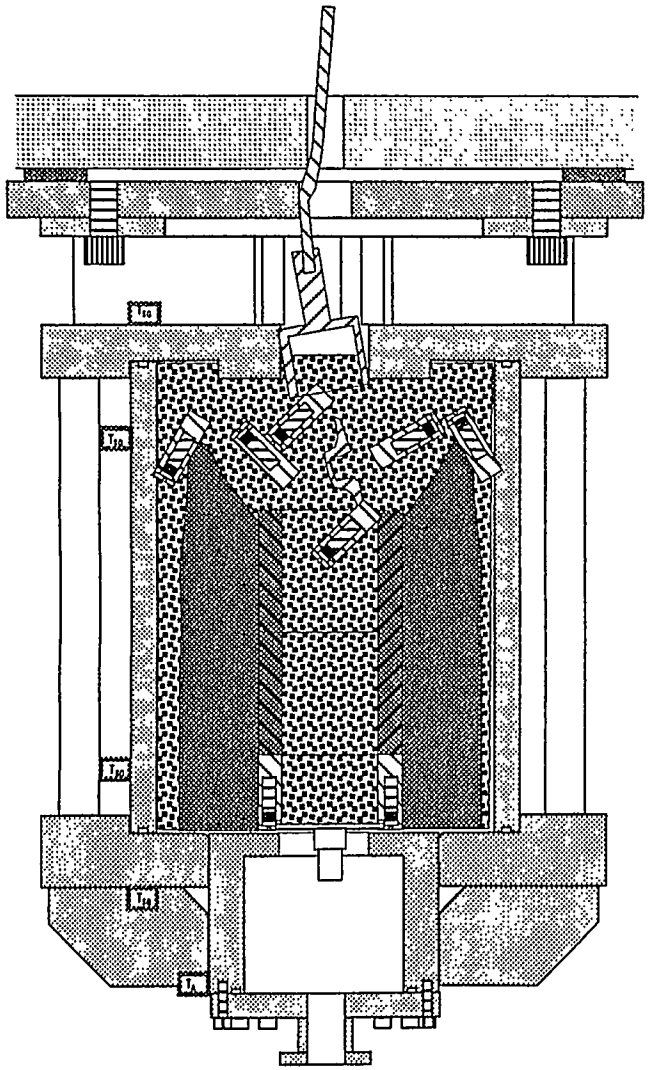

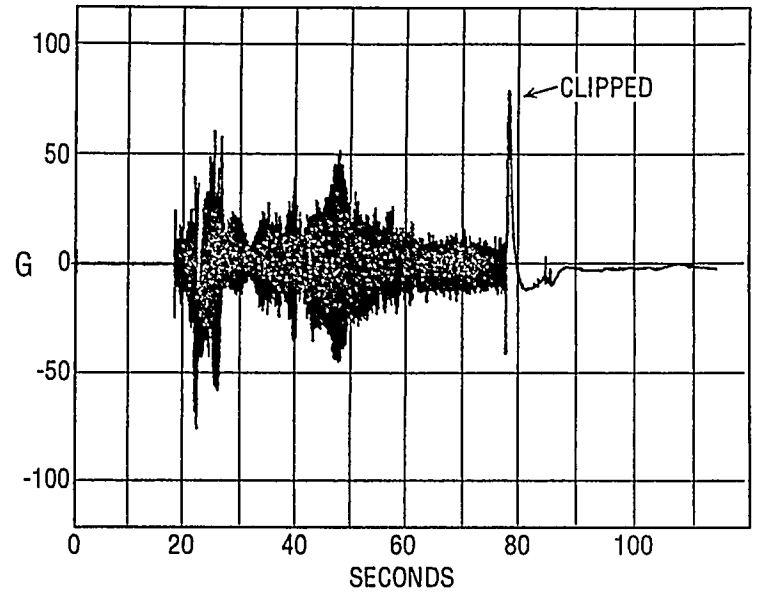

- FIBER FAILS — MASS LOAD COMPRESSION
- ROTOR GOES UNBALANCED, MASS CENTER OF ROTATION RADIUS GROWS TO ~ .10"
- RUBBING CONTACT HUB-TO-CONTAINMENT SLOWS EVENT DOWN (RUNNING/CONTACT SURFACES ARE VERY BLUE AND WORN)
- PROGRESSIVE BREAK-UP OF HUB, UPPER MASS LOAD EJECTS, ~25% FIBER FAILURE
- FAILED FIBER HAS A VISCOUS DAMPING EFFECT, LIMITING ANGULAR MOMENTUM TRANSFER

TRINITY
FLYWHEEL BATTERIES INC.

ROTOR CONTAINMENT OBSERVATIONS

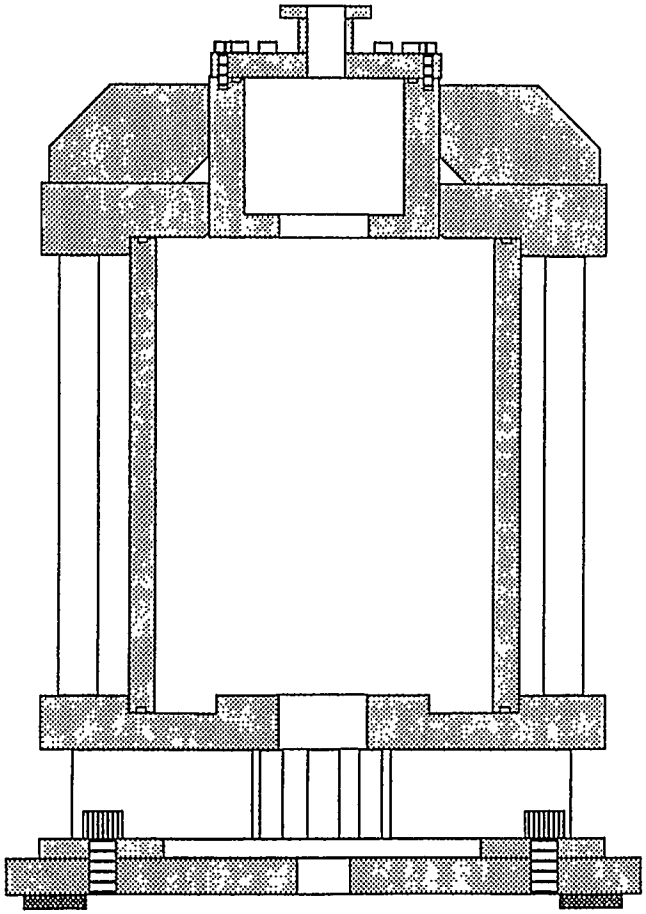

- ONE USEFUL CONTAINMENT EVENT COMPLETE SEVERAL HUNDRED MORE TO GO — AN INDUSTRY-GOVERNMENT COOPERATIVE EFFORT CAN MAKE A DIFFERENCE
- ROTATING FRAME AND CONTAINMENT DESIGN ARE COMPLEMENTARY PROCESSES
- CONTAINMENT REDUCES AMOUNT OF ROTOR DESTRUCTION
- 3-YEAR $MMM EFFORT TO ACHIEVE CONTAINMENT WITH MASS NOT GREATER THAN ROTOR MASS

TRINITY
FLYWHEEL BATTERIES INC.

FLYWHEEL ENERGY STORAGE SYSTEM DEVELOPMENT AT UNIQUE MOBILITY

Presented at

The Flywheel Energy Storage Workshop

Oak Ridge National Laboratory

by

Joseph M. Olbermann

Manager, Flywheel Systems Group

Unique Mobility, Inc.

October 31 - November 3, 1995

Unique Mobility Flywheel Systems Group

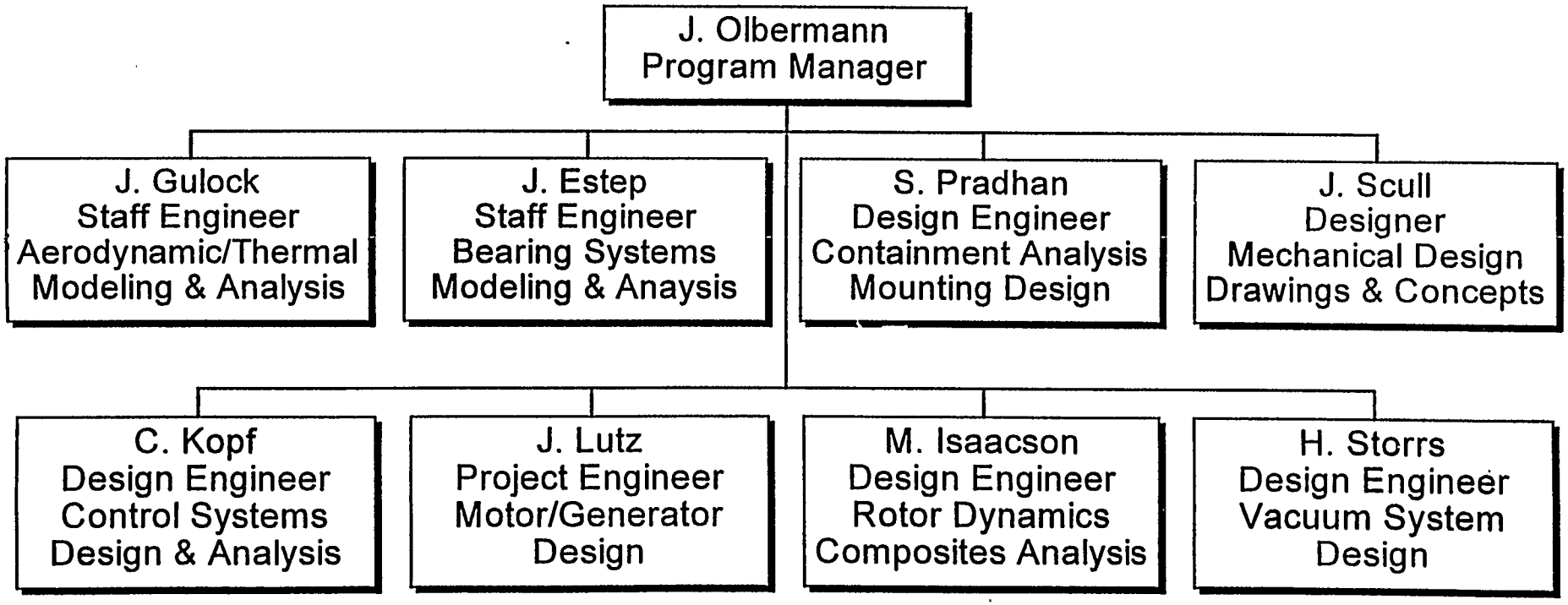

DEVELOPMENT PROGRAMS

1989 - 1992: PROJECT AMOEBA

- $1.1M PROGRAM CO-FUNDED BY ALCAN, UNIQUE AND URIF
- TEAMED WITH UNIVERSITY OF OTTAWA FLYWHEEL GROUP (FES)
- SURGE POWER FLYWHEEL DEVELOPMENT
- 40kW - 500Wh - 30,000 RPM

1992 - 1993: FLYWHEEL/MOTOR INTEGRATION STUDY

- $204K UNIQUE AND FES COLLABORATION
- 80,000 RPM HUBLESS ROTOR/MOTOR DESIGN STUDIES

UQM

Typical Composite Flywheel Designs

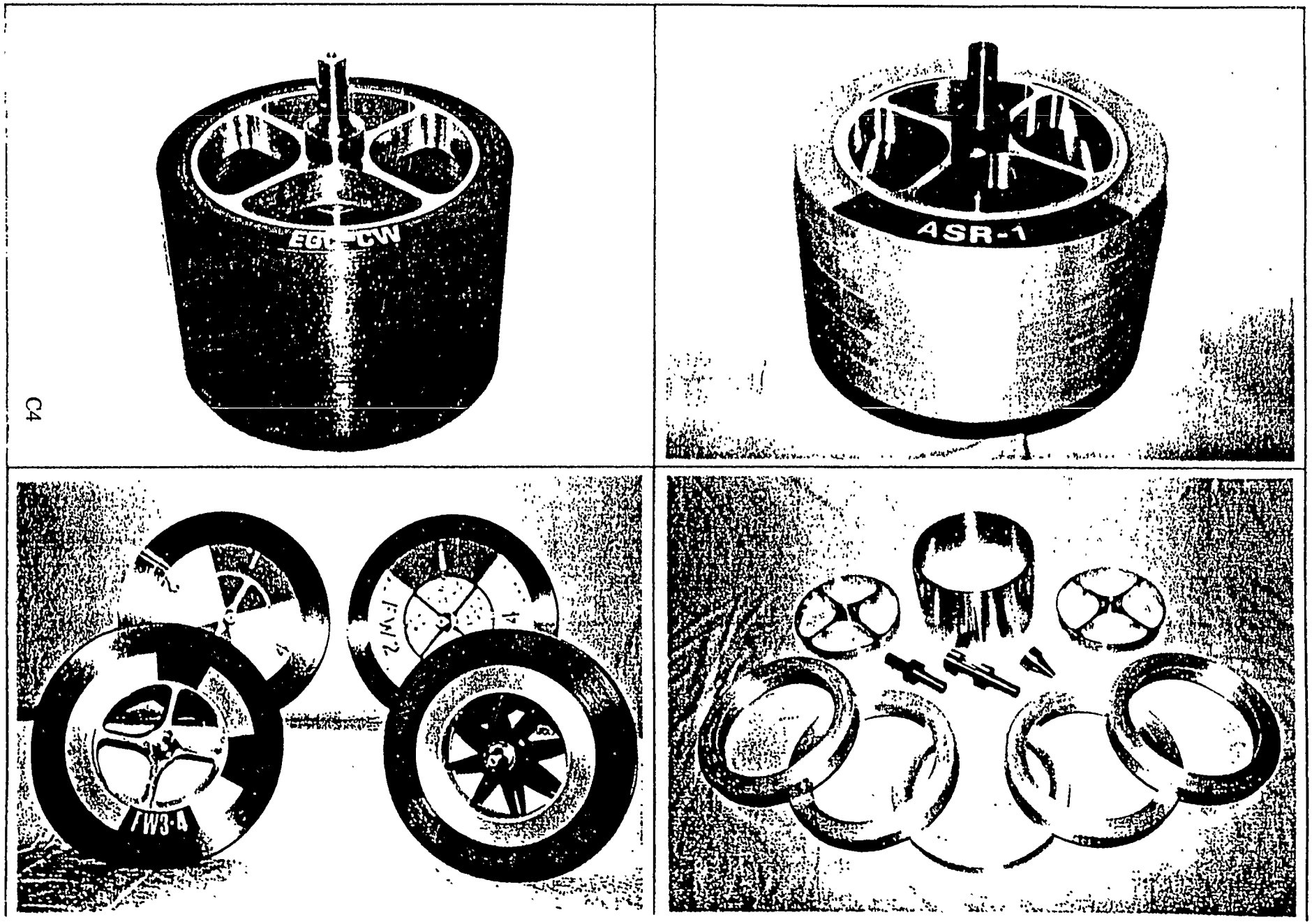

DEVELOPMENT PROGRAMS

1992 - 1994: FLYWHEEL MOTOR & CONTROLLER FOR UTRC

- $475K PROGRAM FOR UTRC
- INTEGRATION OF UQM MOTOR INTO UTRC FLYWHEEL
- DEVELOPMENT OF FLYWHEEL SYSTEM ELECTRONIC CONTROLS

1994 - 1996: DOE/FORD FLYWHEEL DEVELOPMENT

- MULTI-MILLION DOLLAR PROGRAM FUNDED BY DOE & UNIQUE
- ANALYSIS, DESIGN, FABRICATION & TEST OF AUTOMOTIVE SURGE-POWER FLYWHEEL IN COLLABORATION WITH FORD

UQM

FLYWHEEL SHAFT ASSEMBLY

- Inside-out permanent magnet motor/generator (water cooled)
- Upper and lower radial magnetic bearings with position sensors

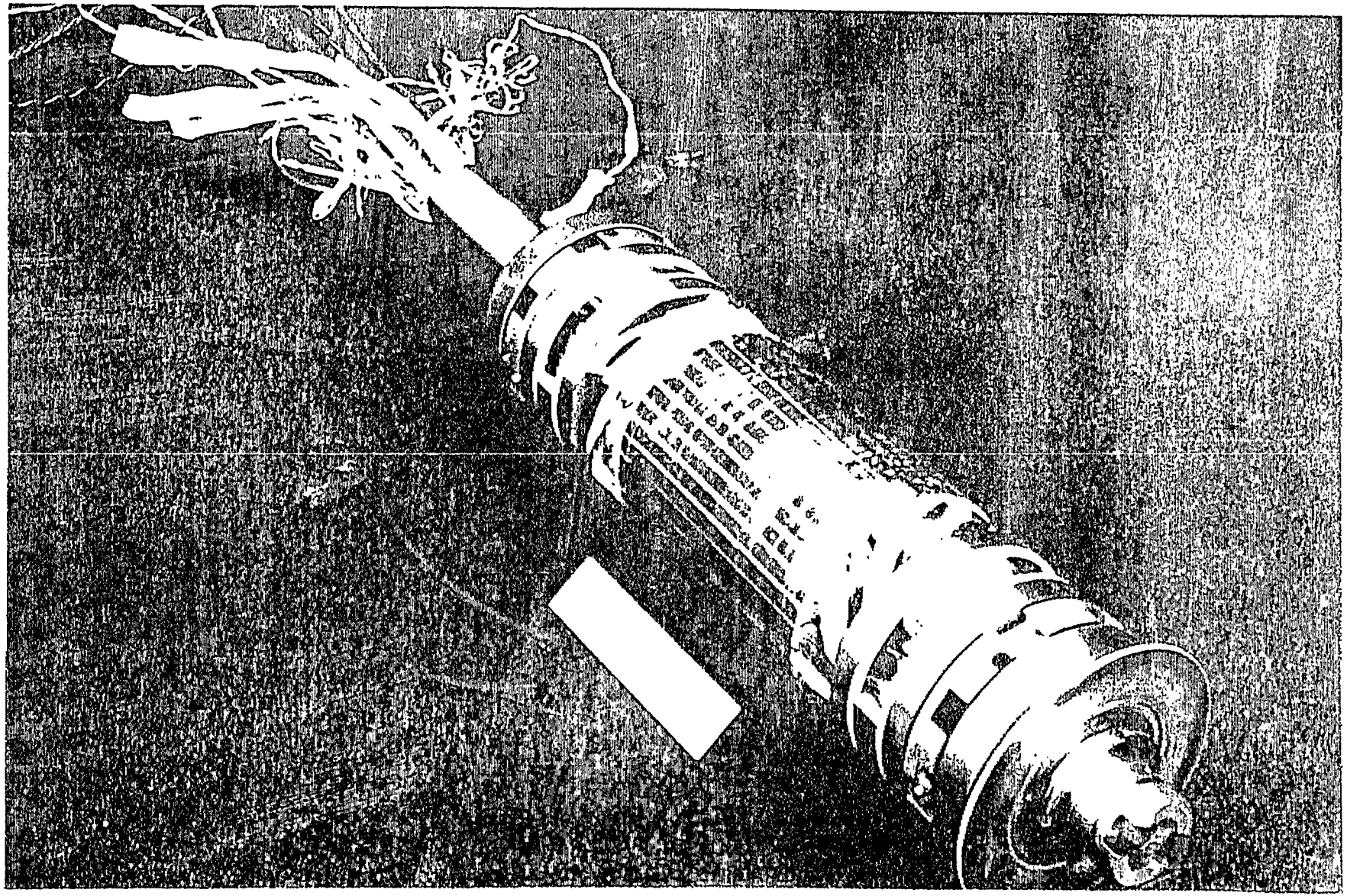

- 26 1/4 inches long

FORD/DOE FLYWHEEL PROGRAM

PHASE 1 PROGRAM OBJECTIVES

- EVALUATE VARIOUS FESS CONCEPTUAL DESIGNS FOR STEADY STATE OPERATION
  Model Performance and Losses

- EVALUATE THE PRACTICAL CONSTRAINTS FOR THE SAME FESS CONCEPTUAL DESIGNS
  Model Cost, Size and Weight

- DEVELOP A DYNAMIC SYSTEM SIMULATION TO INTEGRATE WITH THE FORD HYBRID VEHICLE MODEL

UQM

MOTOR/CONTROLLER SYSTEM LOSS

Combined 25KW High Eff. Motor/Generator & Controller

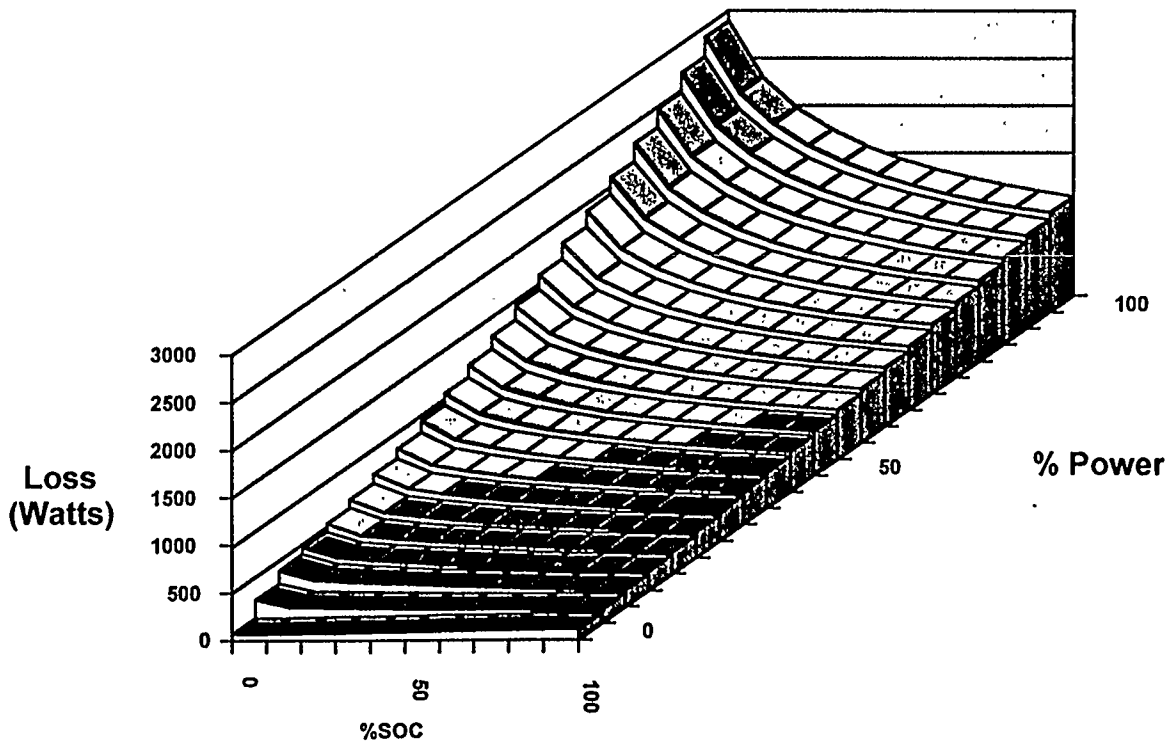

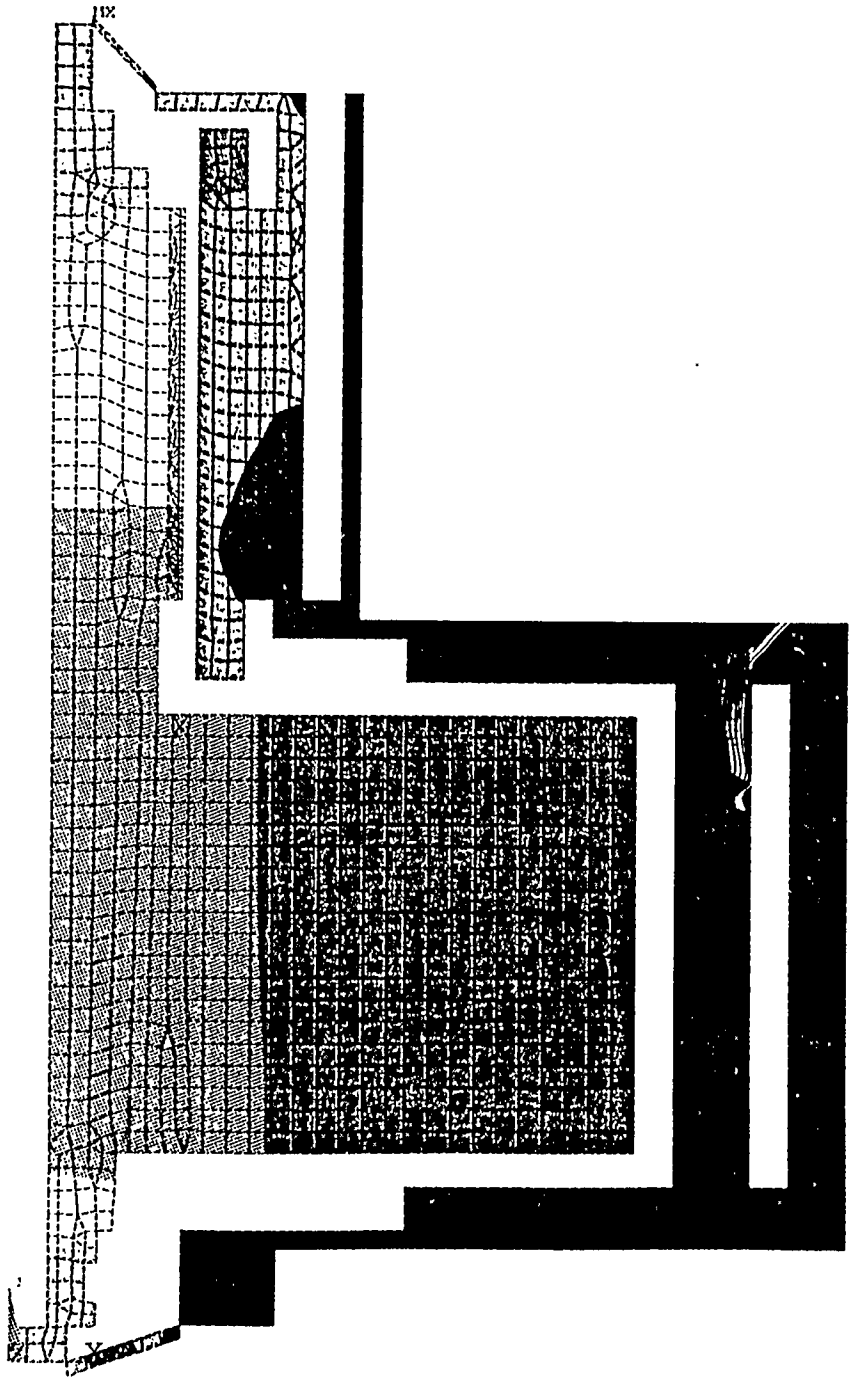

ANSYS 5.0 24
AUG 17 1995
17:41:21
PLOT NO. 1
NODAL SOLUTION
STEP=1
SUB =1
TIME=1
TEMP
SMN =297.491
SMX =389.013

Temp °K

297.491
307.66
317.829
327.998
338.167
348.336
358.505
368.674
378.844
389.013

SED ROTOR OPTIMIZATION

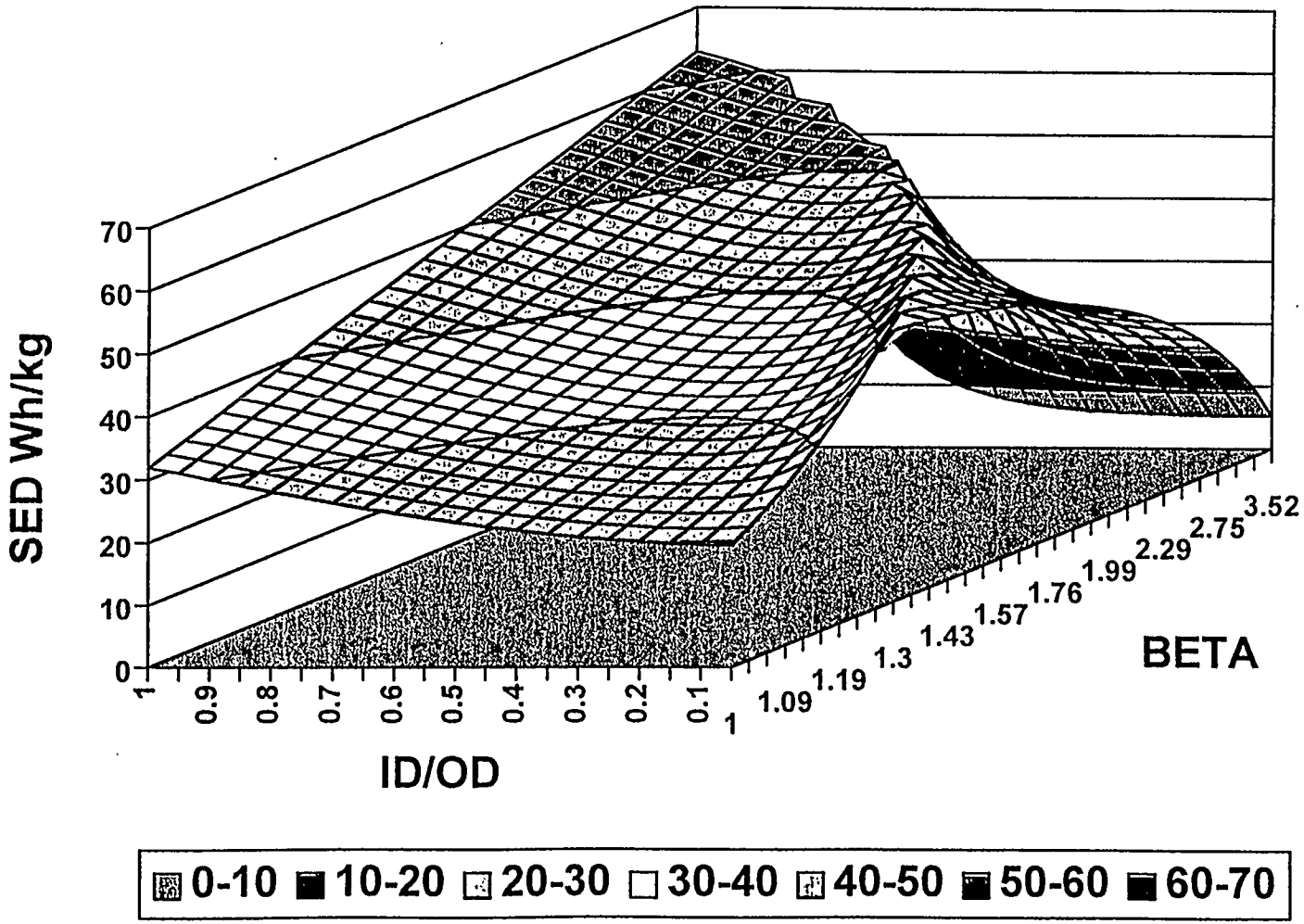

FLYWHEEL SYSTEM CONCEPTS

2kWH - 25kW

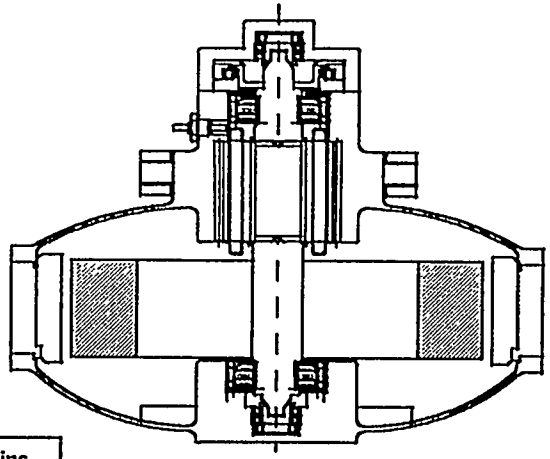

LENGTH	26.5 ins
DIAMETER	26.5 ins

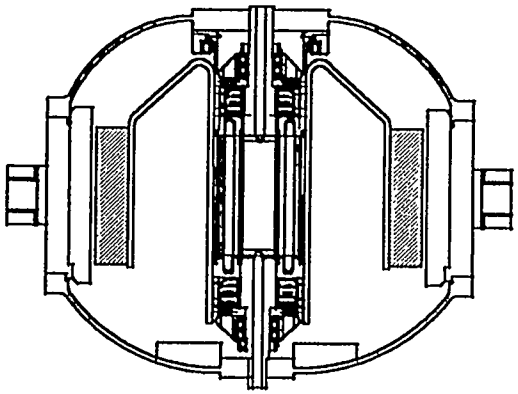

LENGTH	18.5 ins
DIAMETER	23.5 ins

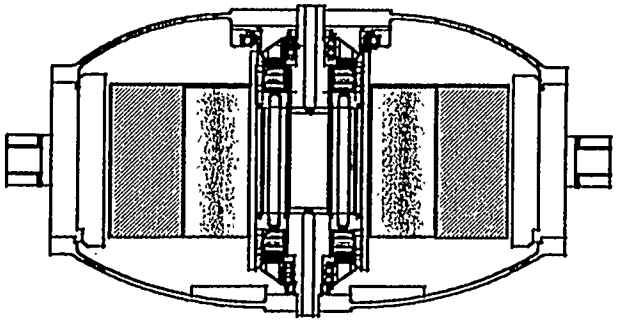

LENGTH	18.5 ins
DIAMETER	23.5 ins

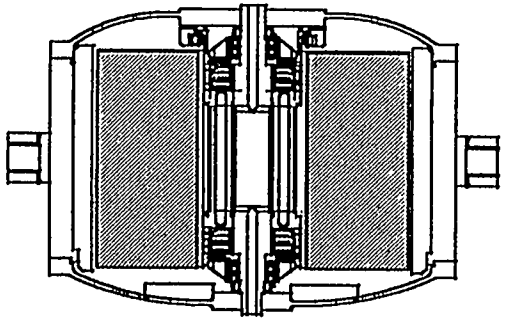

LENGTH	18.5 ins
DIAMETER	21.0 ins

LOW COST CONFIGURATION
2kWh - 25kW

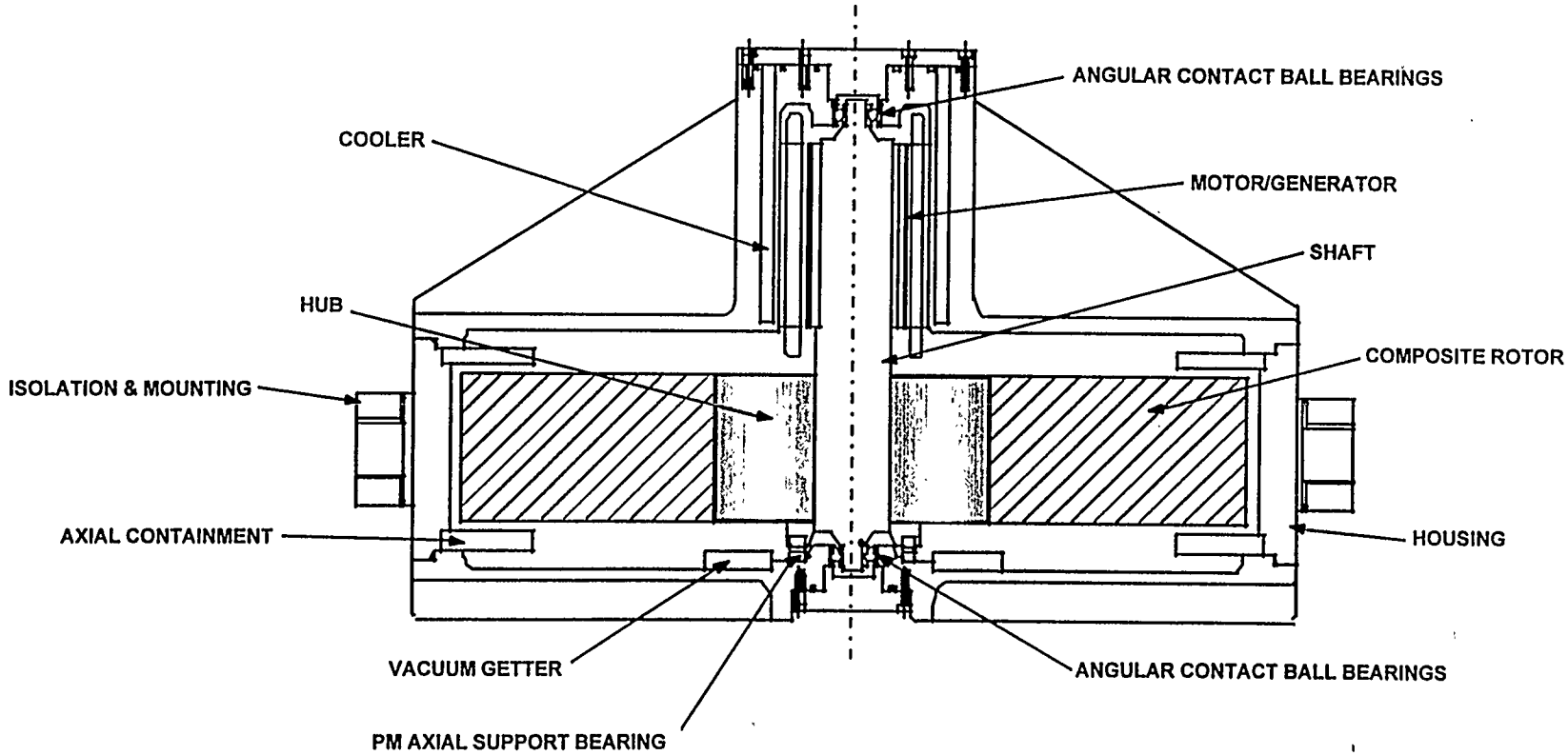

LENGTH	14.0 IN
DIAMETER	-31.5 IN

LOW COST CONFIGURATION
with 25 kW High Efficiency Motor and Controller

FLYWHEEL COST (100K)

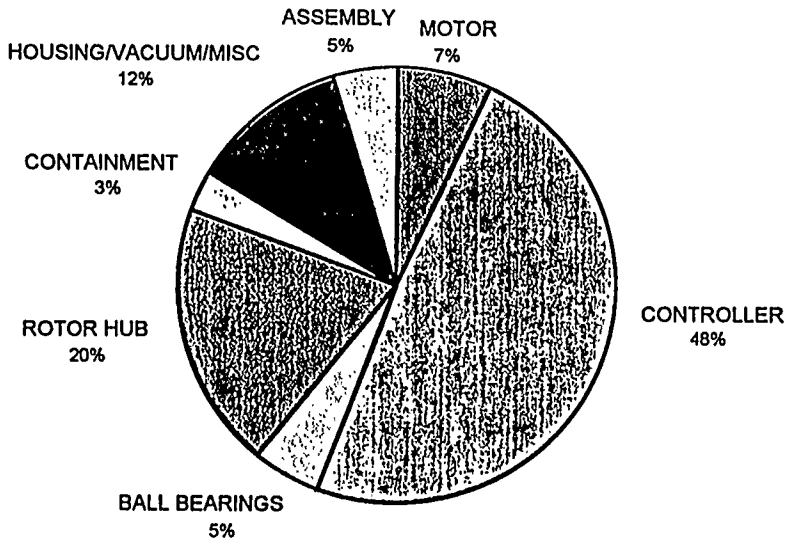

FLYWHEEL COMPONENT WEIGHT

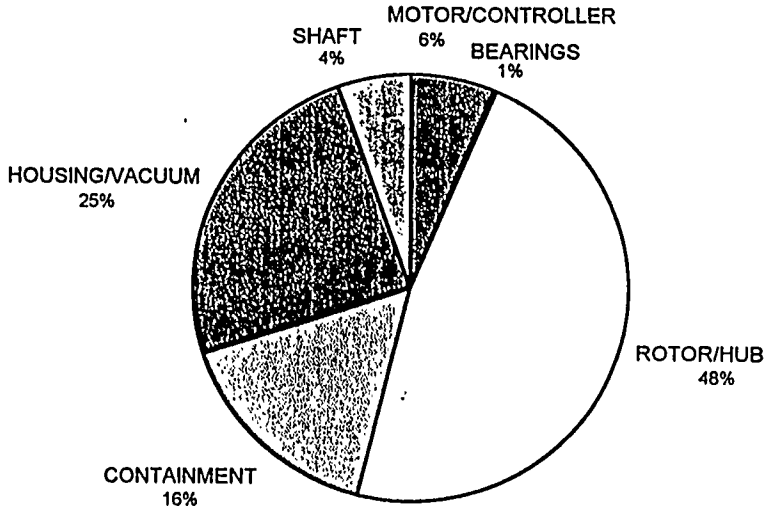

- Total Cost $1,466
- Total Weight 291 lbs

100K UNIT QUANTITIES

PROGRAM DESIGN PHILOSOPHY

- Fast Paced - Six Months for Design/Fabrication/Testing
- Low Budget - 12% of Original Budget
- Low Risk - Utilize Proven, Available Component Technologies
- Laboratory Test Unit - Designed for Safety, Not Light Weight
- System Design - Based Upon Phase I Models

UQM

FESS SPECIFICATIONS

- Power: 40 kW
- Energy (Useable): 500 Wh (15,000 - 30,000rpm)
- Weight:
  - Composite Rotor: 17.1 kg
  - Electronic Controller: 8.6kg
  - System Total: TBD
- Cycle Life: 4,000 Full Stress Cycles
- R/T Efficiency: 89% Maximum
- Power Density: TBD
- Energy Density: 39.[redacted] Wh/kg (Composite Rotor only)
- Motor/Generator: Liquid Cooled PM Brushless DC
- Electronic Controller: Liquid Cooled IGBT Power Modules + Micro-processor Control
- System Voltage: 250 - 350 VDC

UQM

ROTOR DYNAMICS ANALYSIS

- MODE SHAPES
- CAMPBELL DIAGRAM
- BEARING LOADS VERSUS SPEED
- BEARING LOSSES

MODE SHAPES

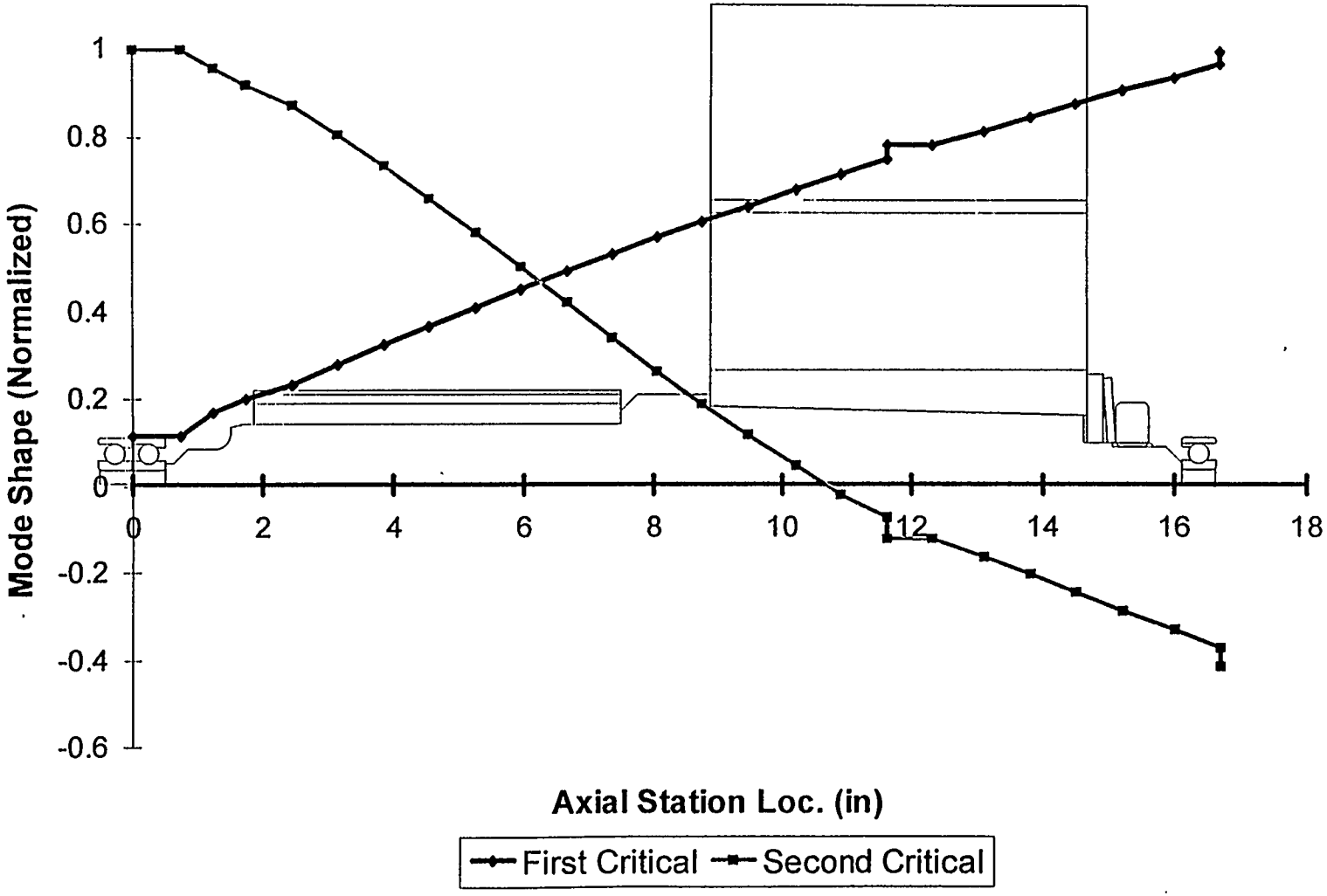

CAMPBELL DIAGRAM

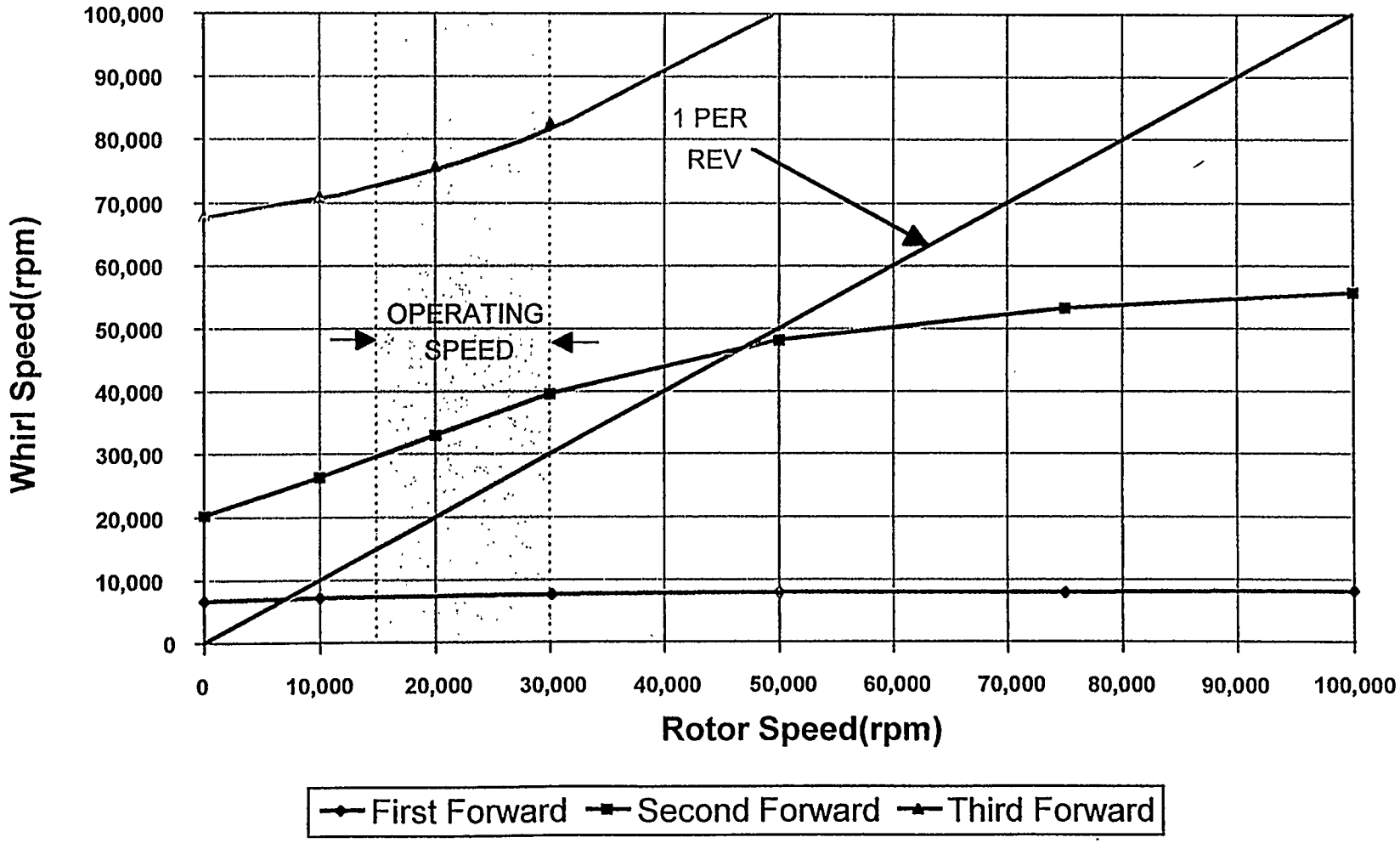

BEARING LOADS Vs. SPEED

(Rotor unbalance 3 gram-in/plane out of phase)

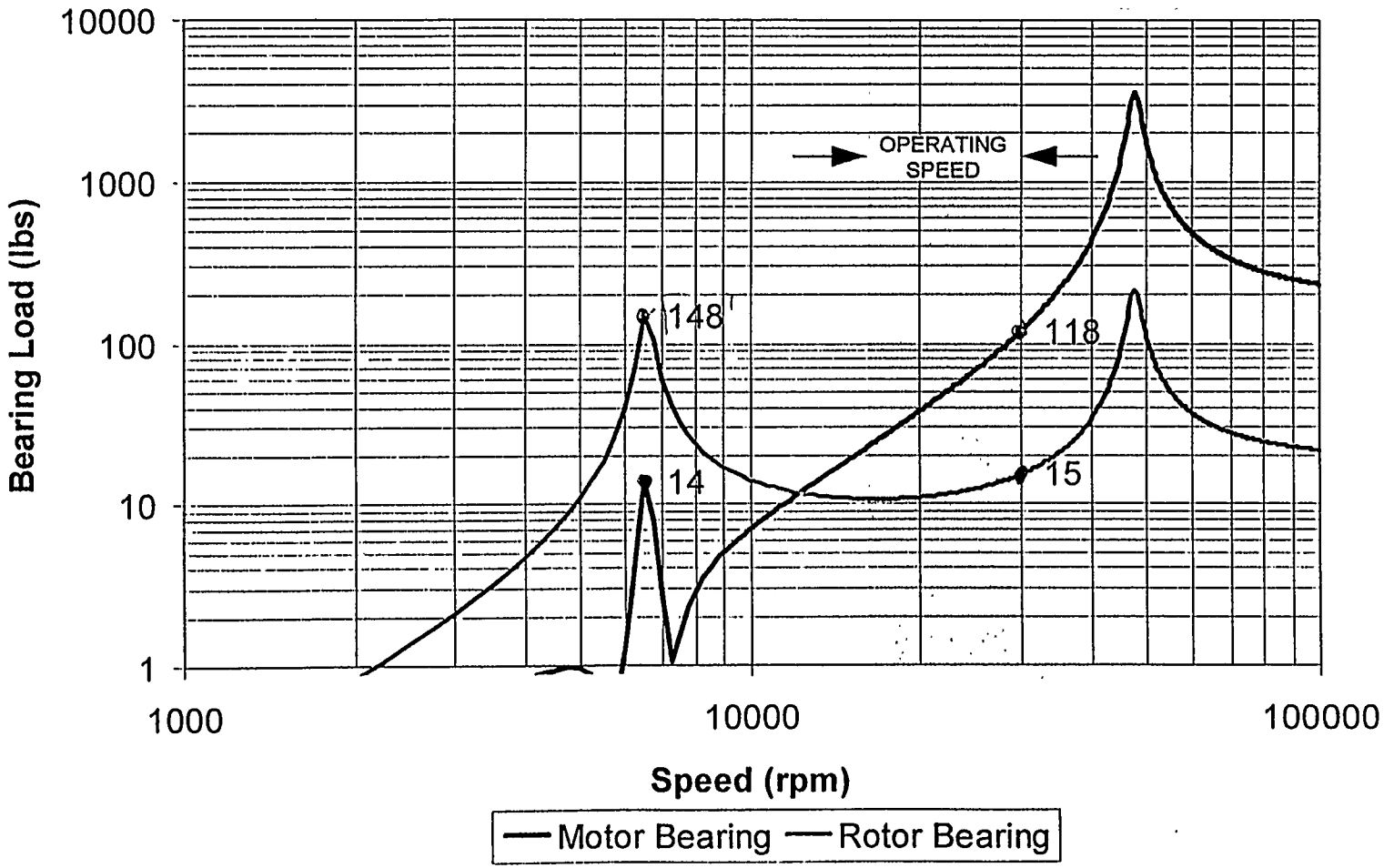

BEARING LOADS Vs SPEED

(Rotor unbalance 3 gram-in/plane in phase)

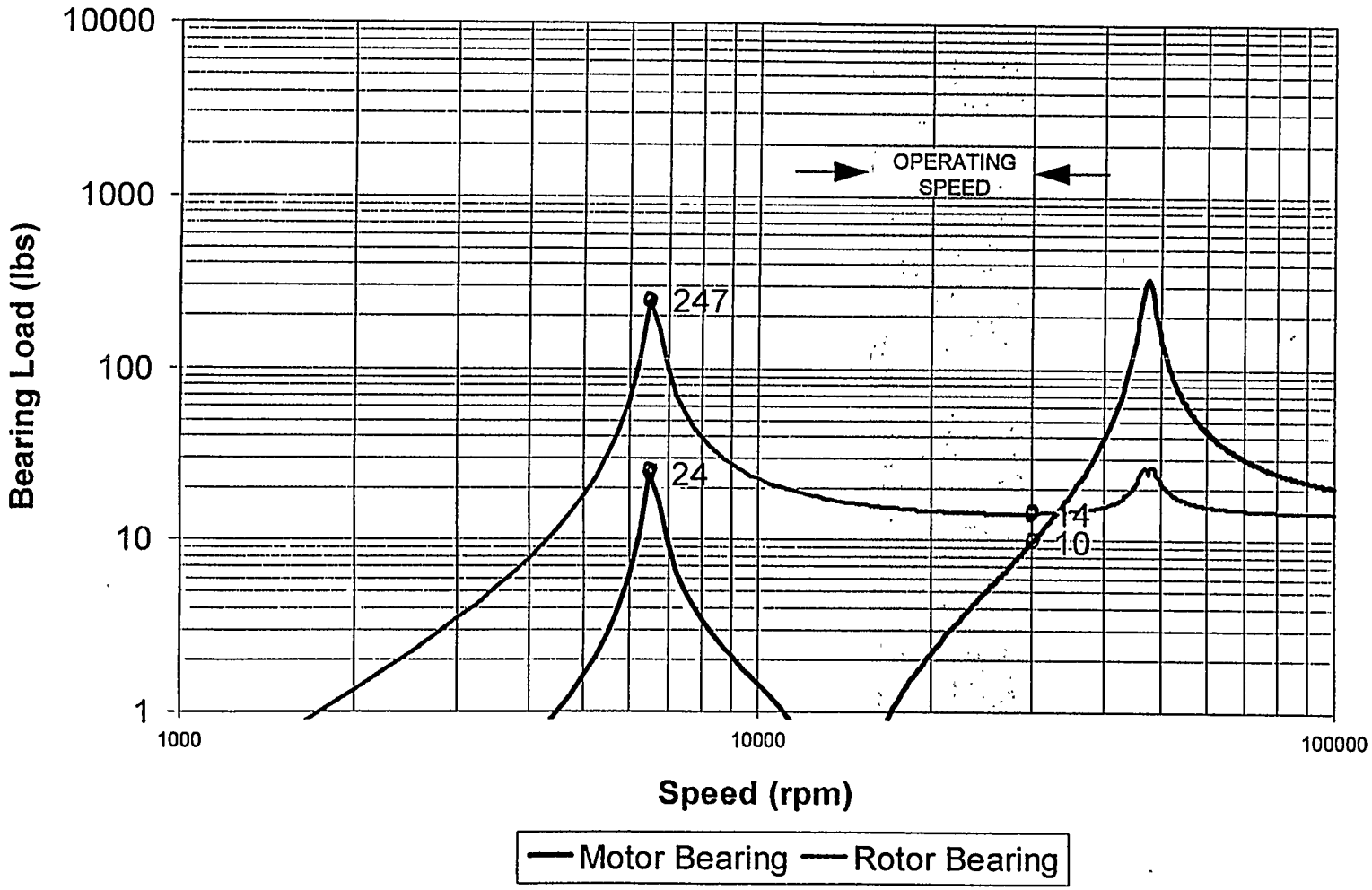

BEARING LOSSES

(Two Plane Balance: 3 gr-in per Plane e = 0.0002")

	1st Critical	15,000 rpm	30,000 rpm
Out-of-Phase			
Motor Bearing	14 W	32 W	74 W
Rotor Bearing	19 W	21 W	46 W
In-Phase			
Motor Bearing	14 W	31 W	64 W
Rotor Bearing	28 W	22 W	46 W

UQM

ROTATING ASSEMBLY SUPPORT

- EXTRA-LIGHT, SUPERPRECISION, ANGULAR CONTACT BALL BEARINGS
  - CERAMIC BALLS
  - ABEC -7 TOLERANCES
- 30,000 RPM, PERMISSIBLE OPERATING SPEED
- LUBRICATION - VACUUM GREASE
  - EXXON, ANDOK C OR EXXON, BEACON 325

UQM

ROTOR DYNAMICS SUMMARY

- THE DESIGN ELIMINATES CRITICAL SPEED RESONANCES WITHIN THE OPERATING SPEED RANGE
- BEARING LOADS ARE MAINTAINED WITHIN THE LIMITS OF EXISTING BALL BEARING TECHNOLOGY
- STRICT TWO-PLANE BALANCE IS REQUIRED TO MINIMIZE BEARING LOADS

UQM

FESS PARASITIC LOSS MODELING

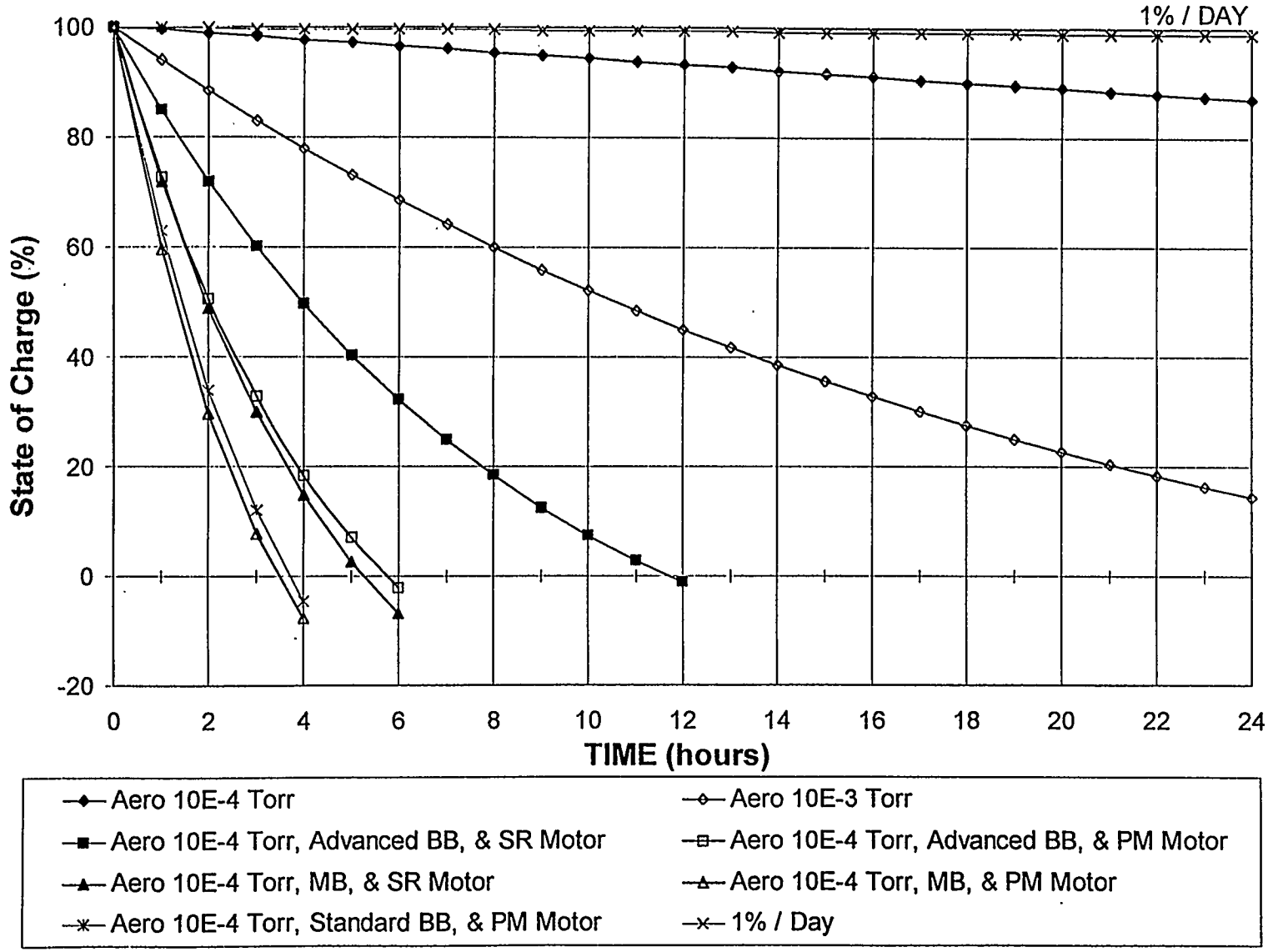

FLYWHEEL SYSTEMS GROUP GOALS

- Advance Flywheel Energy Storage System Technology
- Provide FESS Analytical Modeling
- Provide FESS Design Engineering
- Establish Joint Cooperative FESS Development Programs
- Participate in DOE Advanced Flywheel Programs

UQM

Flywheel Development Activities at ORNL

John W. McKeever
Oak Ridge National Laboratory*

ARPA/DOE Flywheel Energy Storage Workshop

October 31 - November 2, 1995

ornl

*Managed by Lockheed Martin Energy Systems for the U.S. Department of Energy under Contract DE-AC05-84O42100.

ORNL'S FLYWHEEL SAFETY AND CONTAINMENT ACTIVITIES

- Analysis of the DEMO 1C failure video data and continuing study of failure events
- ORNL internally funded work to evaluate containment concepts
- AFS/ORNL team to support demonstration of an energy storage battery
- ARPA/DOE Flywheel Energy Storage Workshop at Oak Ridge, TN on Oct. 31 -Nov. 2, 1995
- DOE/ARPA Safety and Containment Program starting in FY 1996

ornl

DEMO 1C EXPERIENCE AND ANALYSIS

OVERHEADS AFTER THE DUST SETTLED SHOWING SOME FAILURE RESULTS

VIDEO SHOTS AT MAXIMUM RESOLUTION - SHOWN AT 30, 15, 10, 5, AND 1 FRAMES PER SECOND

FRAGMENT OF FRACTURED ROTATABLE LINER

ornl

High Speed Flywheel Demonstration

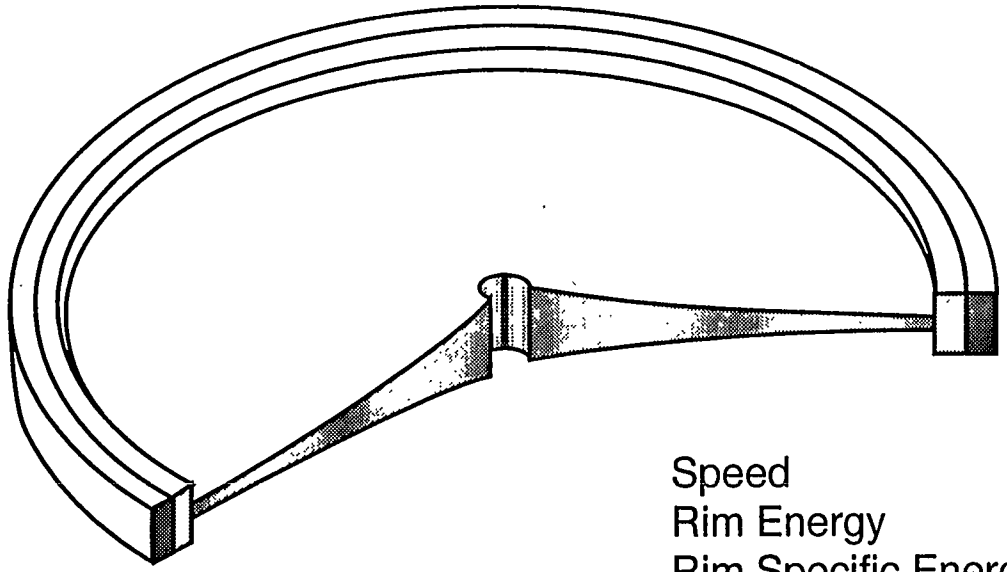

DEMO 1C

Speed	1405	m/s
Rim Energy	5.45	MJ (1.51 kWh)
Rim Specific Energy	878	kJ/kg (244 Wh/kg)
Total Energy	7.28	MJ (2.02 kWh)
Total Specific Energy	420	kJ/kg (117 Wh/kg)
Date:		*December 9, 1985*

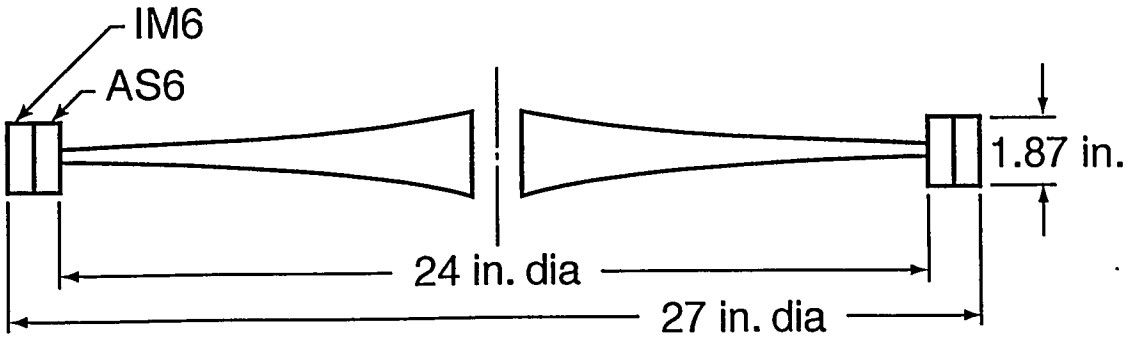

D.U. O'Kain

ornl

DWG. NO. K/G 95-400 GSS

SKETCH OF DEMO 1 SPIN TANK

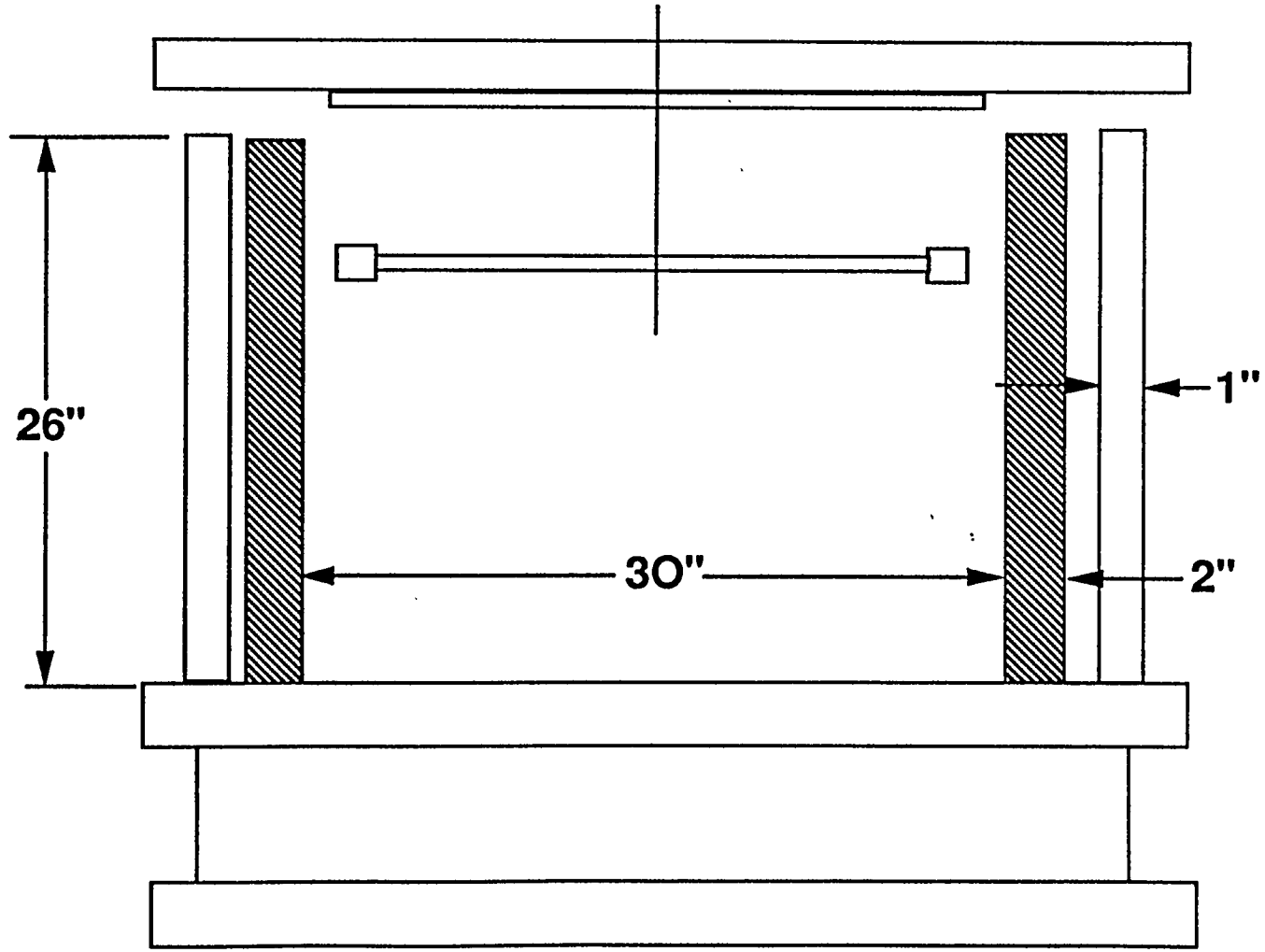

ornl

FLYWHEEL ENERGY STORAGE WORKSHOP
J. W. MCKEEVER 10/31-11/2/95

ornl

DEMO 1C After Dust Settled

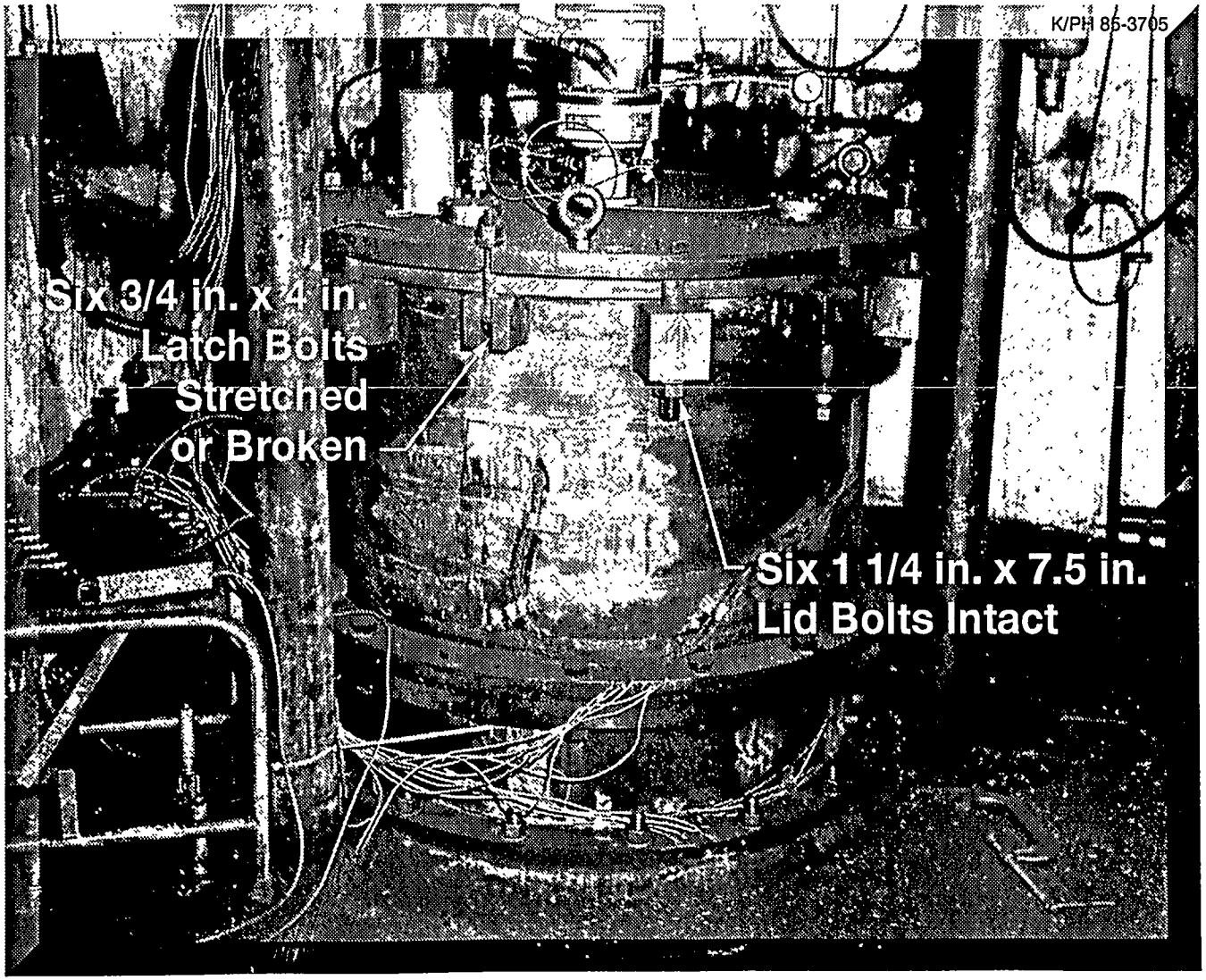

DWG. NO. K/G 95-852 GSS

ornl

DEMO 1C Component Failures

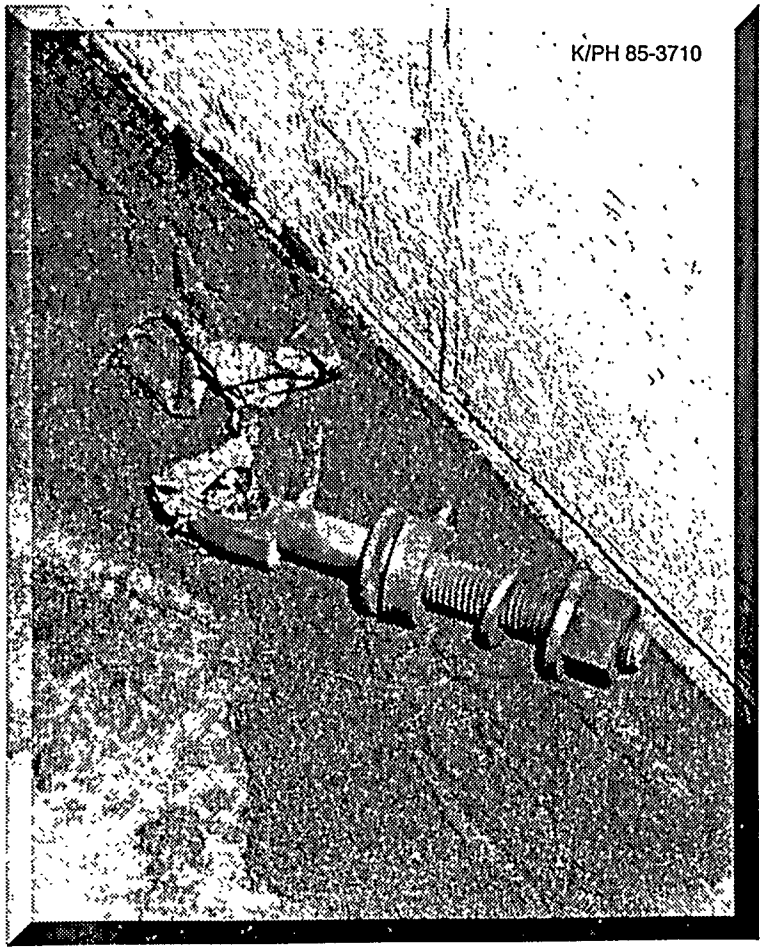

Latch Bolt Failure

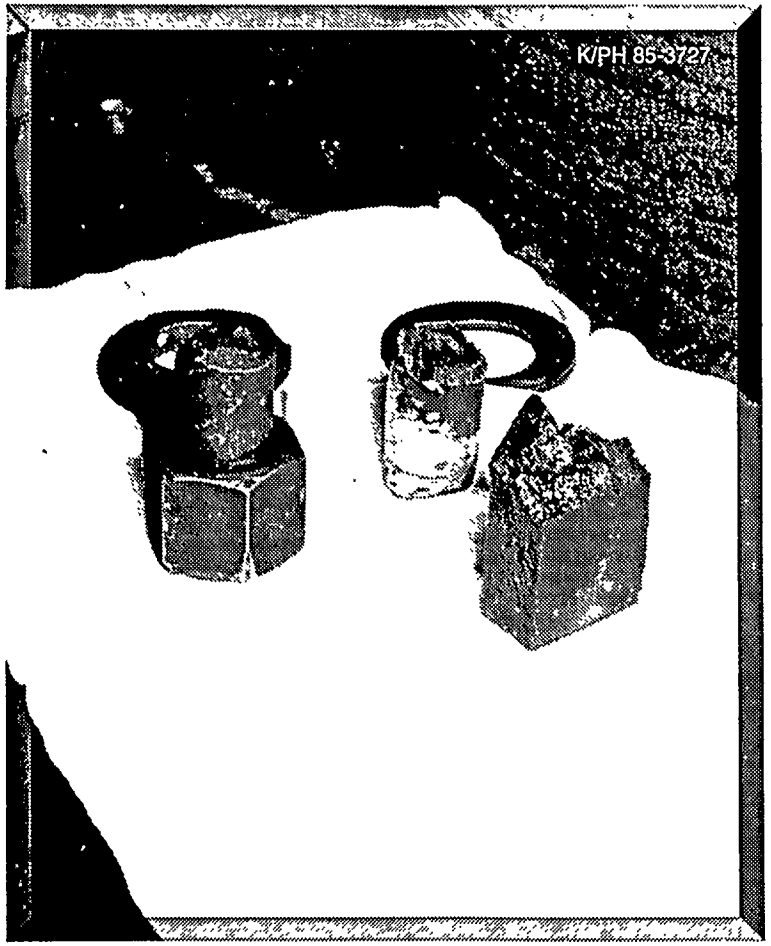

Arbor Failure and Liner Fragment

DWG. NO. K/G 95-854-R1 GSS

ornl

Dust And Fragments Embedded In Revetment Wall

DWG. NO. K/G 95-853 GSS

ornl

Shattered Rotatable Liner Covered With Flywheel Burst Products

DWG. NO. K/G 95-855 GSS

ornl

Shattered Rotatable Liner After Cleanup

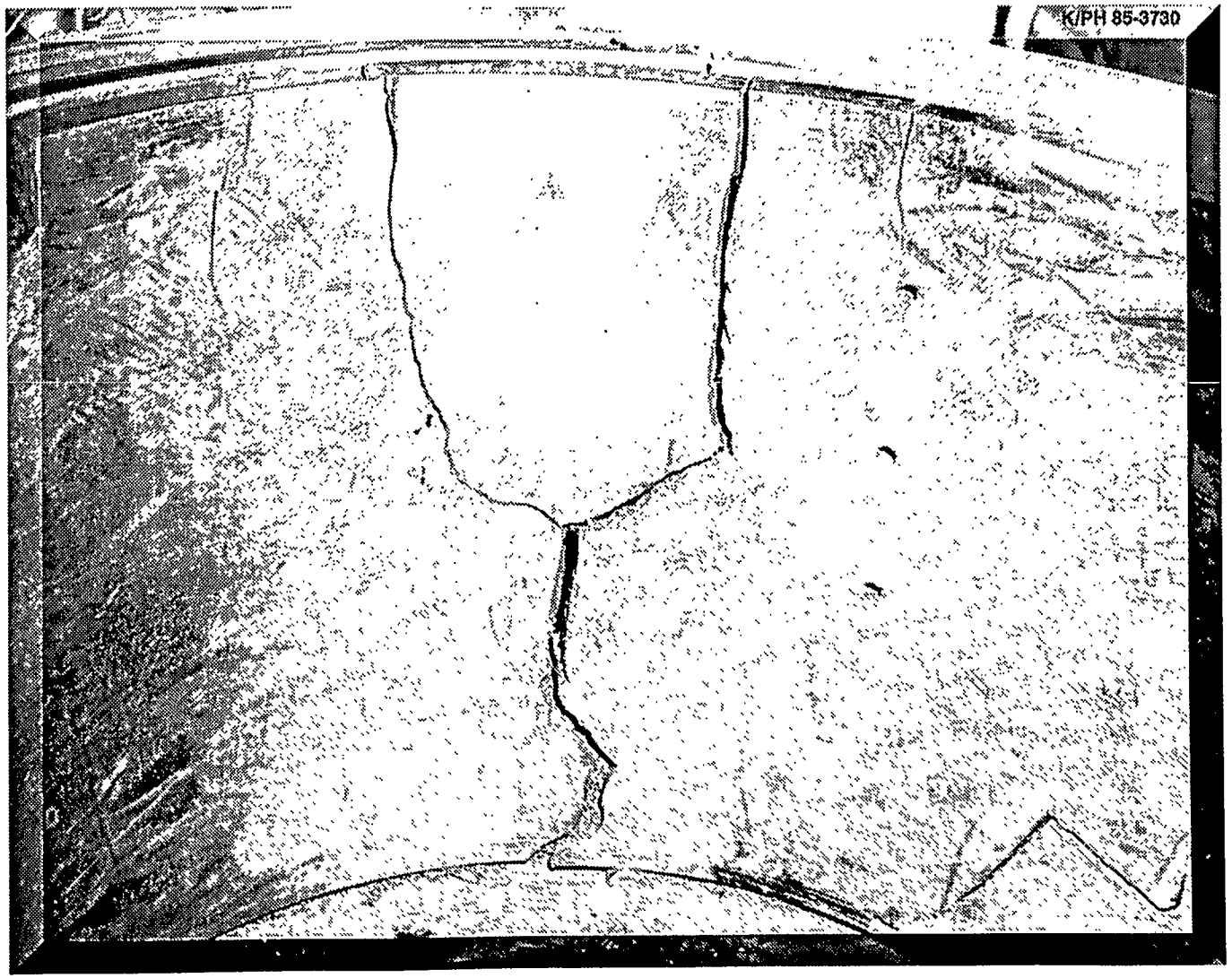

DWG. NO. K/G 95-856 GSS

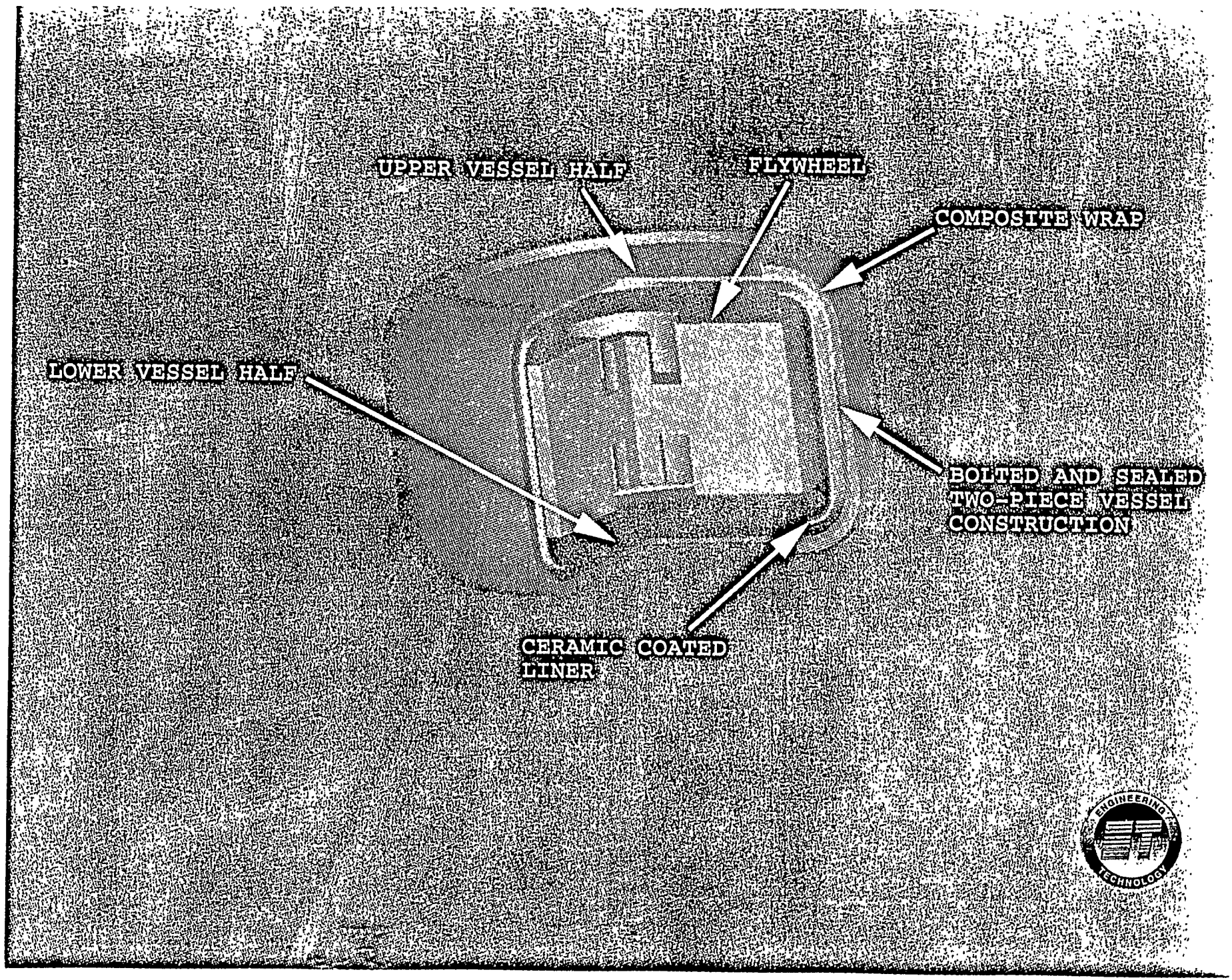
UPPER VESSEL HALF
FLYWHEEL
COMPOSITE WRAP
LOWER VESSEL HALF
BOLTED AND SEALED
TWO-PIECE VESSEL
CONSTRUCTION
CERAMIC COATED
LINER

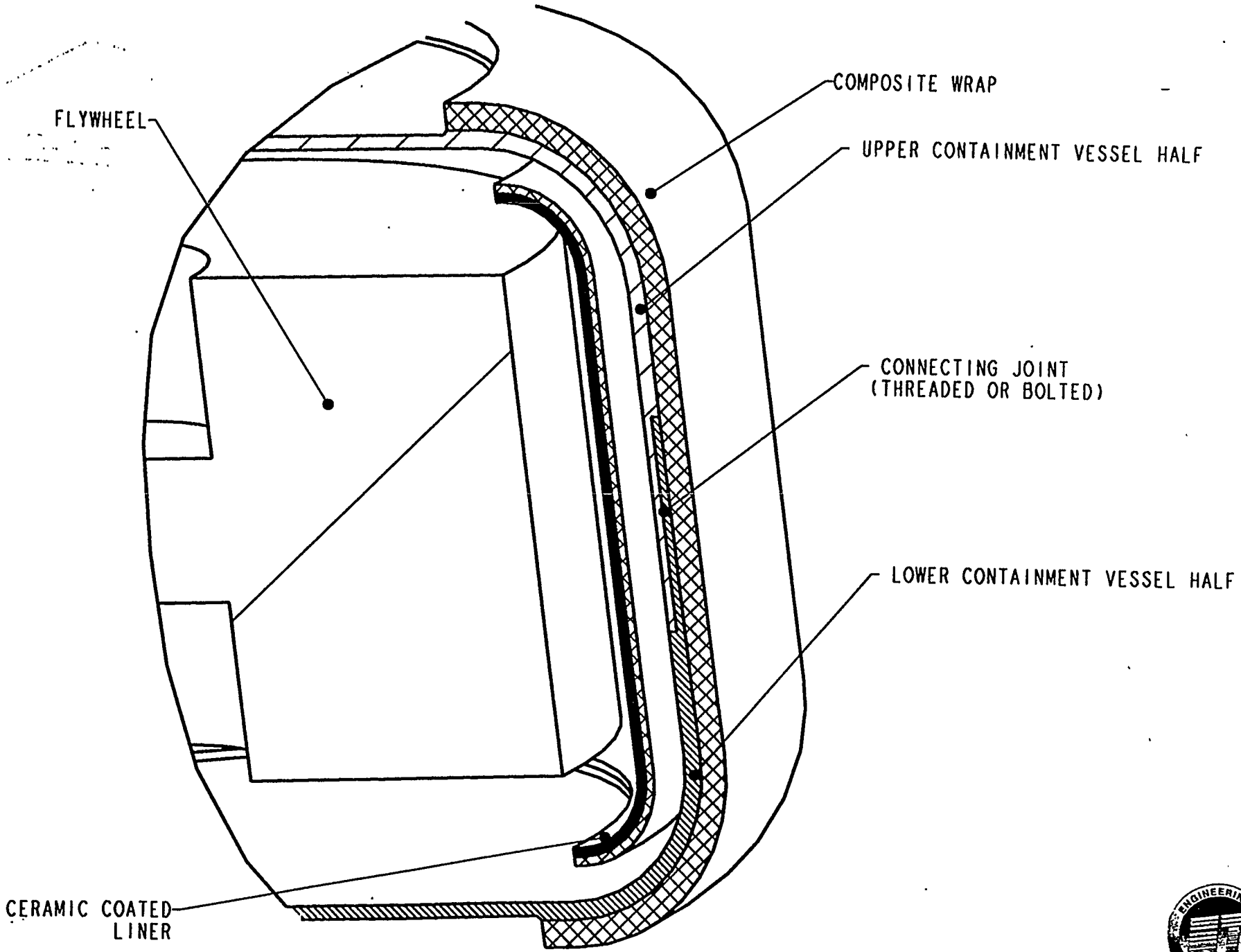
FLYWHEEL
COMPOSITE WRAP
UPPER CONTAINMENT VESSEL HALF
CONNECTING JOINT
(THREADED OR BOLTED)
LOWER CONTAINMENT VESSEL HALF
CERAMIC COATED
LINER

ORNL CAPABILITIES TO SUPPORT THE FLYWHEEL DEVELOPMENT PROGRAM

- COMPOSITES
- MOTOR/GENERATOR TECHNOLOGY
- POWER ELECTRONICS
- SPIN TESTING

ornl

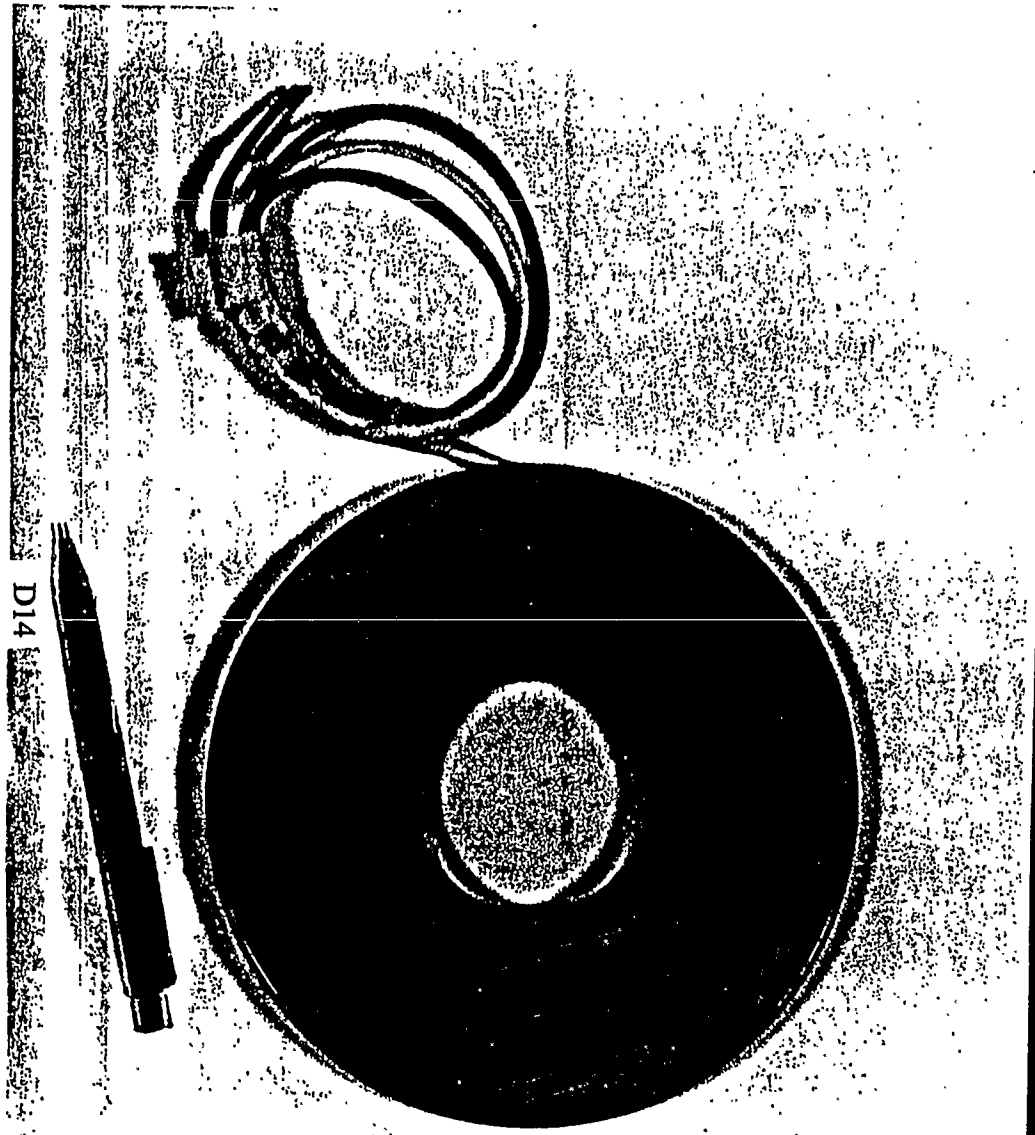

25 HP, 18 KW
PM STATOR
95% EFFICIENCY

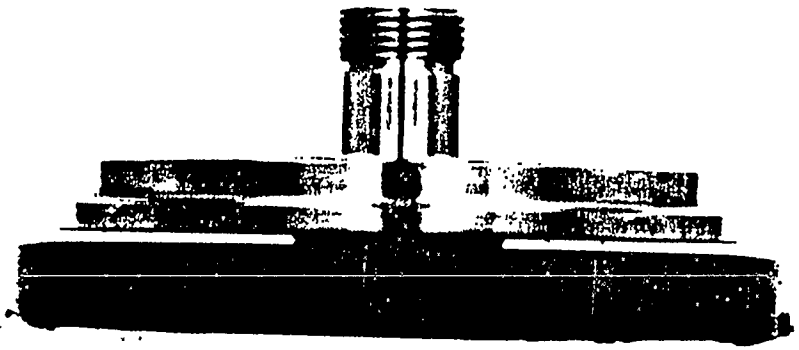

PM MOTOR GENERATOR
25 HP, 18KW
95% EFFICIENCY

MISSION

Provide comprehensive capabilities for design, analysis, development, demonstration, and evaluation of affordable advanced composite materials and structures. The center functions as a key national and international resource for research, development, prototyping, and industrial deployment of advanced composites manufacturing technology.

- Materials Characterization
- Design and Analysis
- Processing Technology
- Prototype Development
- Testing and Evaluation
- Technology Commercialization

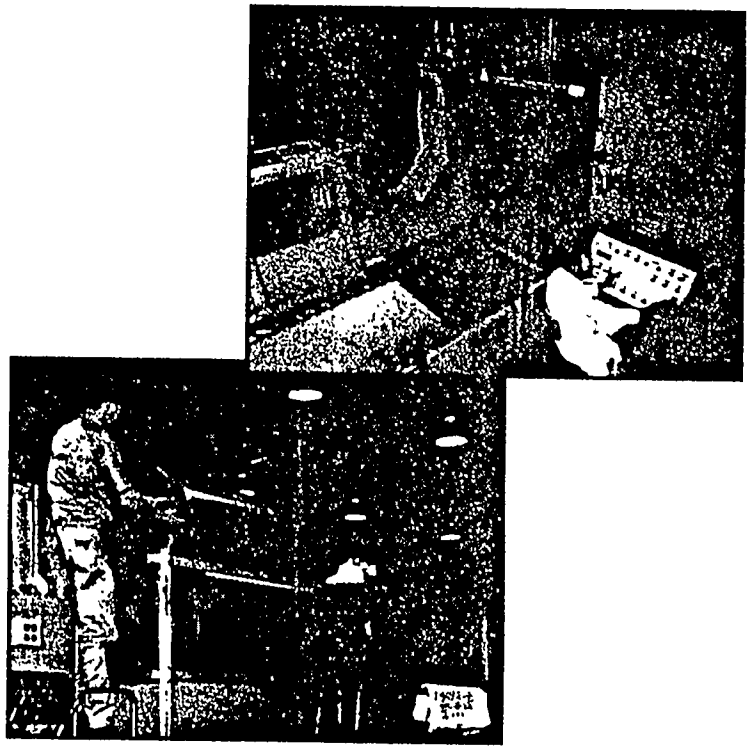

State-of-the-art capabilities and 30 years of experience developing and producing composite structures

COMPOSITES MANUFACTURING TECHNOLOGY CENTER

Y-GA 93-3380

ornl

AFS Flywheel Program

The Oak Ridge National Laboratory is teamed with American Flywheel Systems to support design and demonstration of an energy storage battery.

- Funds-in Work-For-Others program.
- Started July 1994.
- Support is being provided by the Oak Ridge Composites Manufacturing Technology Center, a cooperative effort between ORNL and Y-12.

DWG. NO. K/G 95-697-R1 GSS

ornl

Oak Ridge Spin Test Experience

DWG. NO. K/G 95-703 GSS

Much experience was accumulated during Oak Ridge Programs that may be applied during flywheel development.

- Failure mechanisms
  - Burst
  - Cyclic
  - Creep
  - Corrosion

- Diagnostics
  - Strain measurements
  - High speed photography
  - Acoustic emission
  - Thermal measurements
  - Traversing probe
  - Optical scopes

HIGH SPEED ROTATIONAL TESTING

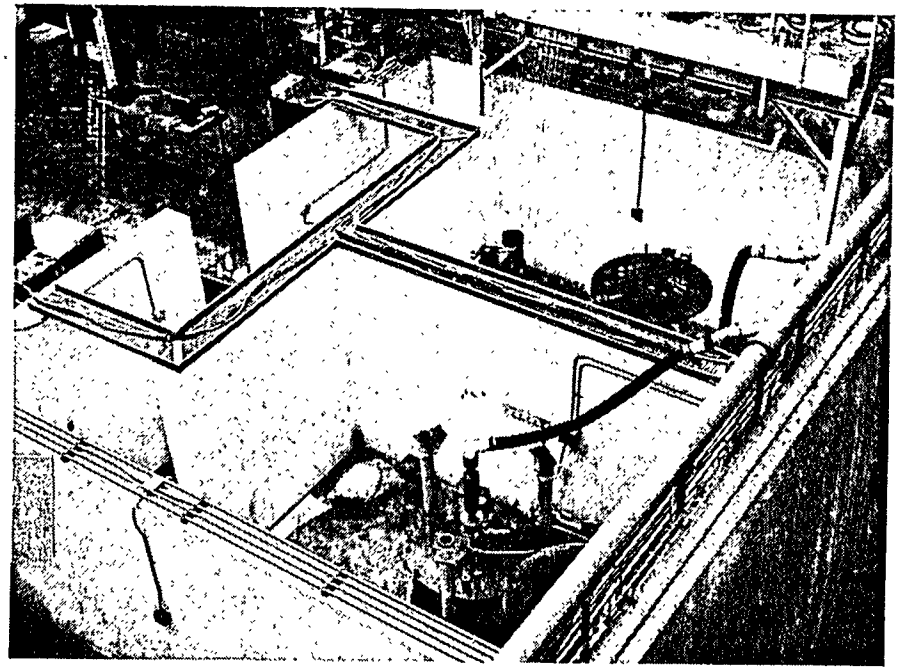

AIR TURBINES WHICH ARE USED FOR HIGH-SPEED TESTING; ENCLOSED IN A REINFORCED CONCRETE REVETMENT AREA

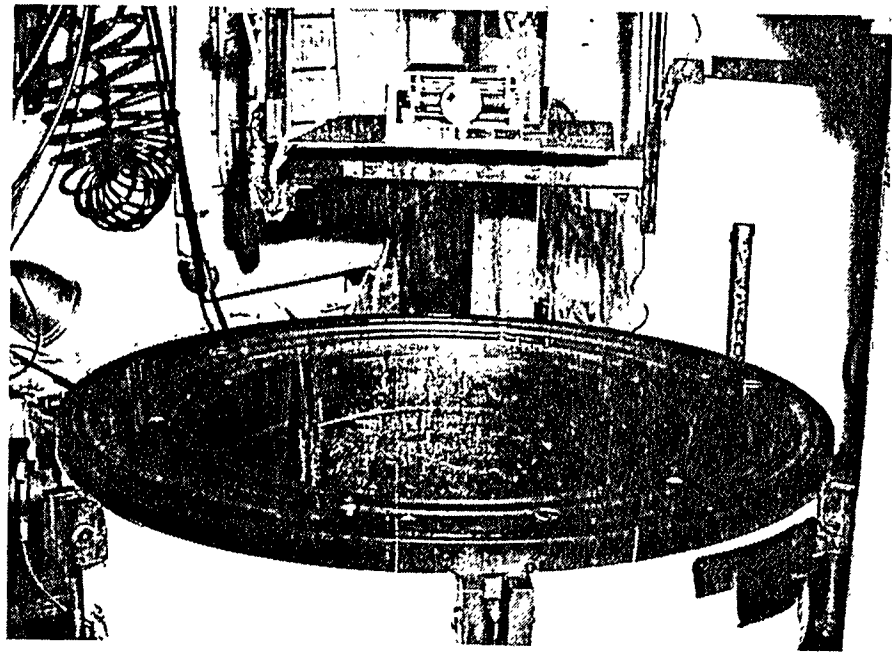

AIR TURBINE TANK WITH ROTATING ENERGY-ABSORBING LINERS

MARTIN MARIETTA

DWG. NO. K/G-85-6183

ORNL Flywheel Demonstration Facility

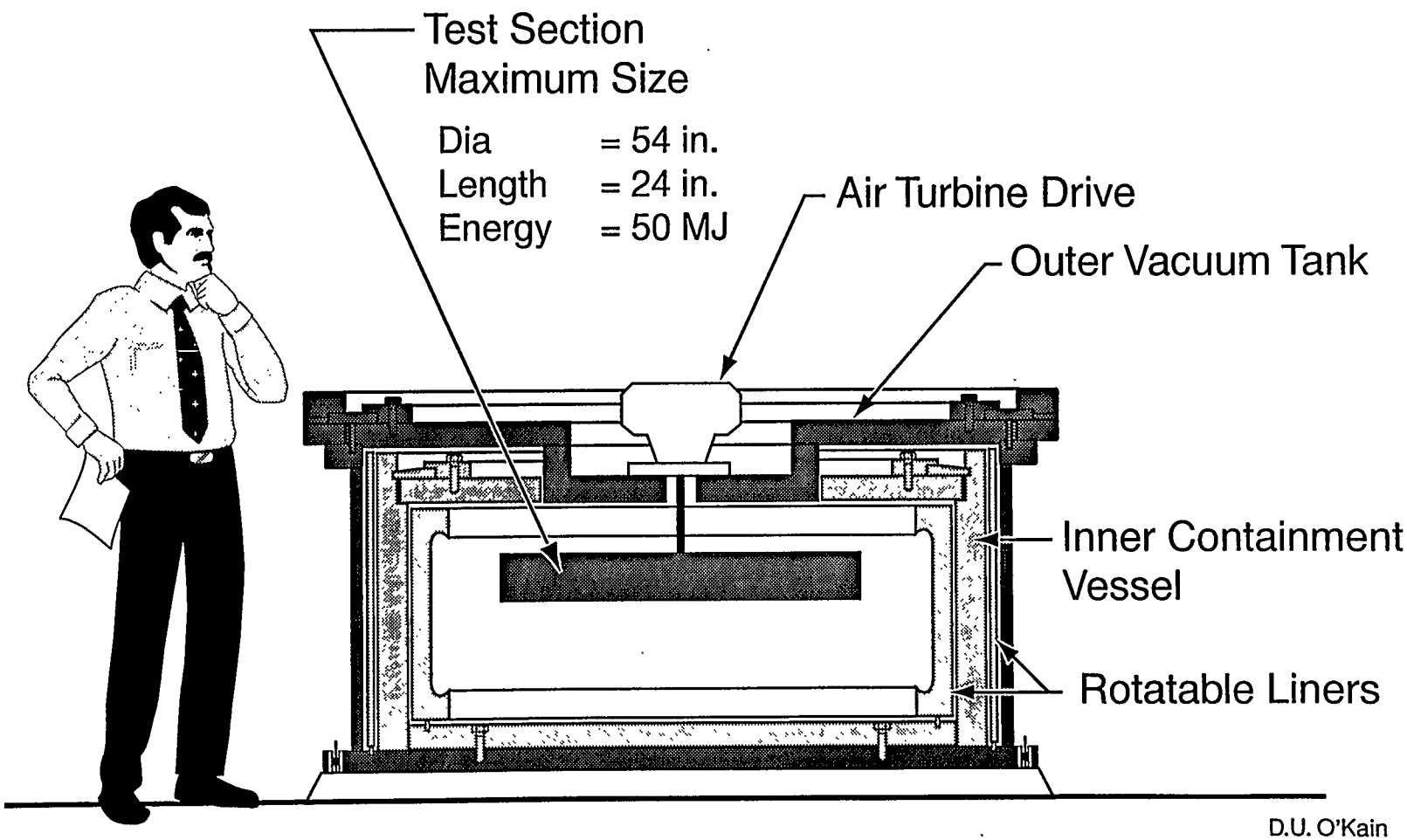

D.U. O'Kain

ornl

DWG. NO. K/G 95-399 GSS

DWG. NO. K/G 95-867 GSS

ornl

ORNL Flywheel Test Facility

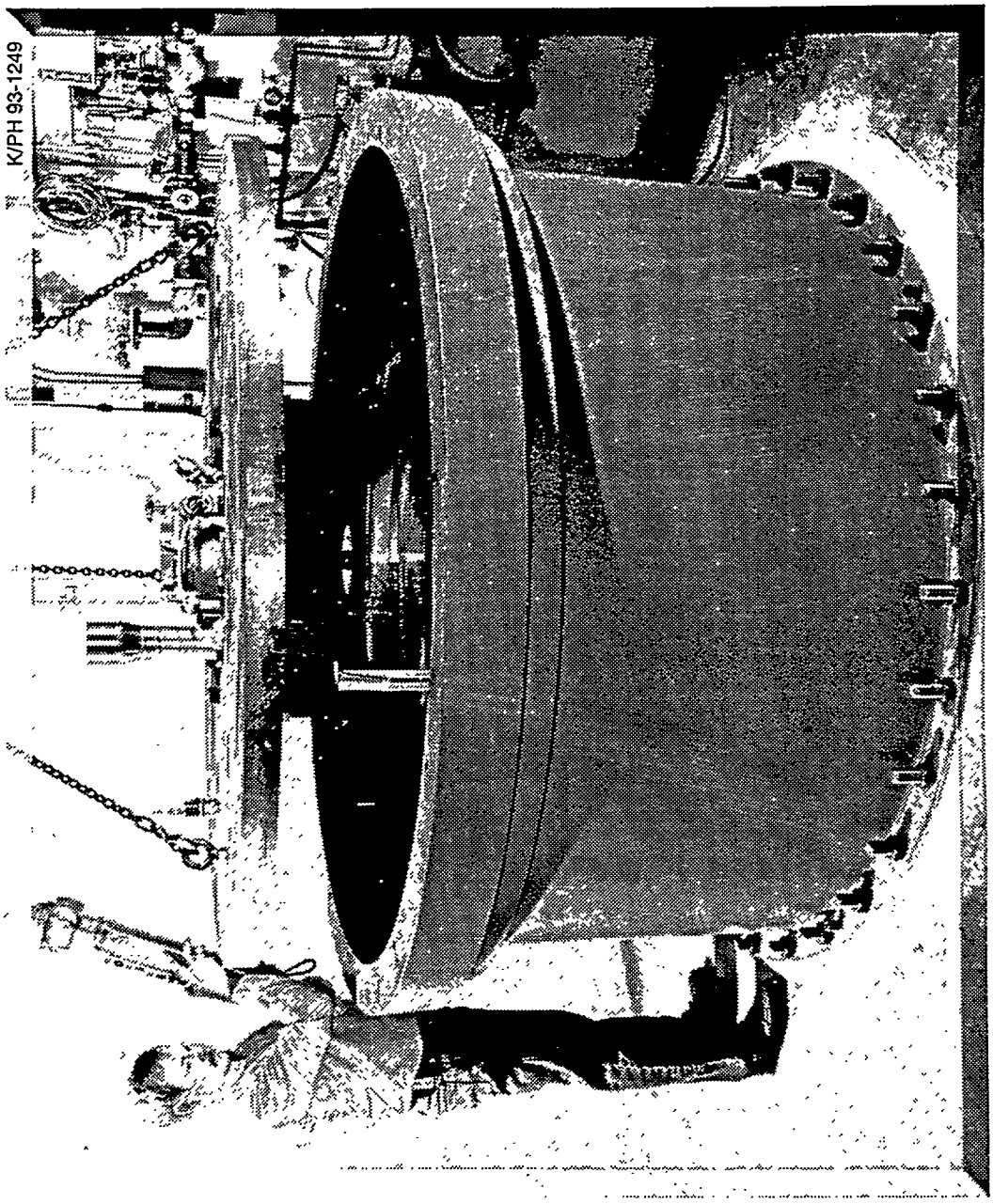

K/PH 93-1249

DOE/ARPA COORDINATED SAFETY AND CONTAINMENT PROGRAM

- ORNL/LLNL/UTCEM TO TEAM IN FY 1996
- PLANNING MEETING AT LLNL ON SEPT. 28, 1995
  - Containment material testing
  - Component development and testing
  - Modeling and foundational studies
  - Containment and concept design
  - Qualification definition and testing
  - Full scale proof testing

ornl

Power Electronics Center
Oak Ridge National Laboratory

DWG. NO. K/G 95-822 GSS

Power Electronics At ORNL

Don Adams, *Manager*

Phone: (423)576-0260
Fax: (423)241-6124
email: ajd@ornl.gov

ornl

November 9 & 10, 1995
ORNL PEC Briefing to U.S. Industries

- Briefings on ORNL-developed power inverter and motor drive technologies
- Find new applications for this advanced technology
- Promote collaborative participation by industries
- Sponsored by the Advanced Machinery Technology Partnership Program of the DOE Office of Nuclear Energy, Science, and Technology
- Call 423-576-1862, John McKeever
  - http://www.ornl.gov/etd/briefing/brief.html

Oak Ridge National Laboratory's Power Electronics Center

- DOE has invested 25 years and over $15 M in advanced electric machinery at the Oak Ridge Complex.
- In the last three years, ORNL's Power Electronics Center has dramatically advanced the technology of soft-switched inverters, multilevel inverters, and efficient compact electric motors.

DWG. NO. K/G 95-823 GSS

ornl

Publications, Presentations, And Patents

DWG. NO. K/G 95-824 GSS

- Over 60 publications and presentations
- Over 15 patent disclosures
- The Digital and Power Electronics Group and colleagues have had papers accepted for publication in the following recent transactions and conferences:
  - IEEE Transactions on Instrumentation and Measurement (1)
  - IEEE Power Electronics Specialists Conference (2)
  - CIGRE SC 14 Colloquium (1) (Invited)
  - IEEE Industry Applications Society Annual Meeting (8) (2nd Place Award)
  - MatLab Conference (Invited)

ornl

Industrial Consultations

- Permanent magnet clutches
- High-efficiency motor failures
- General purpose motion modules
- Winding technology
- Vacuum circuit breakers
- Stray-load-loss reductions
- Coggingless motors
- Hand tool motors and drives
- Miniature generators
- Grinding tool motors and drives
- Motor manufacturability

DWG. NO. K/G 95-827 GSS

ornl

Developing Educational, Training, And Research Partnerships

- Oak Ridge Institute for Science and Education – Faculty and Student Participation
  - Clarkson University
  - Georgia Institute of Technology
  - Massachusetts Institute of Technology
  - North Dakota State University
  - Okayama University
  - University of Wisconsin
  - Universidad Interamericana de Puerto Rico
  - University of Arkansas
  - University of New Orleans
  - University of Southern Indiana
  - University of Tennessee

K/PH 94-4350

DWG. NO. K/G 95-825 GSS

ornl

Advanced Inverters and Adjustable Speed Machine Drives

- Development of advanced soft-switching inverter topologies
- Development of packaging technologies
- Development of DSP-based control technologies for motor drives
- Flywheel energy storage applications

Power Transmission And Distribution Research And Development

- Multilevel voltage-source converter for HVDC systems
- Multilevel static VAR generators
- Hybrid active filters for high-voltage, high-power systems

Power Electronics Center
Oak Ridge National Laboratory

Electric Machines

- Radial and axial air-gap induction machines
- Radial and axial air-gap permanent magnet machines
- Switched reluctance machines
- Synchronous reluctance machines
- Steady state and transient finite element analysis of electromagnetics, stresses, and thermal analysis
- Development of advanced field efficiency measurement methods

Superconductivity

- Superconductor generators and transformers
- Superconductor magnet axial air-gap machines
- Cryocooled integration for inductor, semiconductor switch, and motor
- Multibranch inverters for SMES applications

DWG:NOXK/G95-452/GSS

18 kW PM Motor / Generator
— 95% Efficient —

DWG. NO. K/G 95-859 GSS

K/PH 93-2430

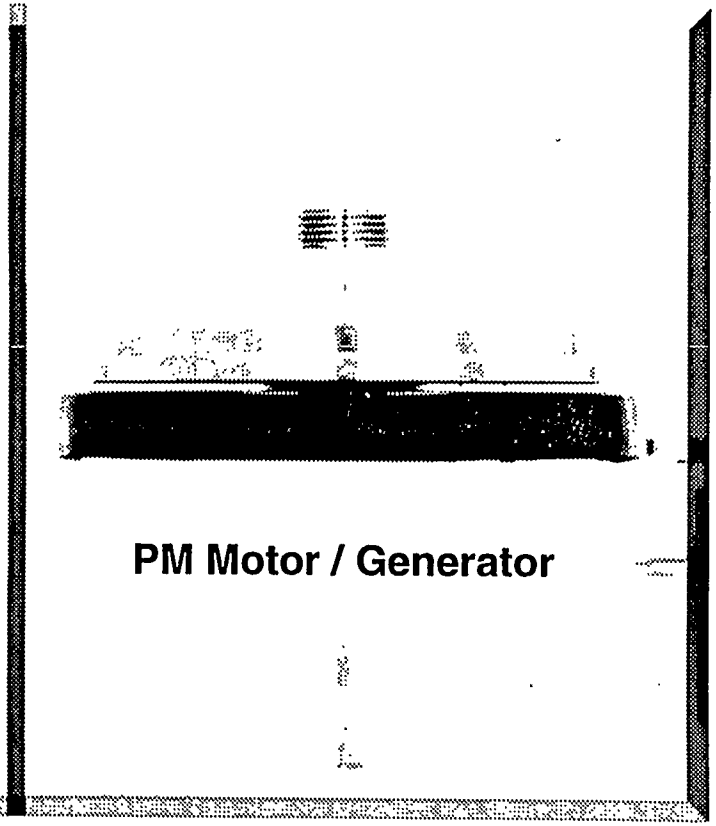

ornl

50 kW Motor / Generator

DWG. NO. K/G 95-828 GSS

K/PH 86-0809

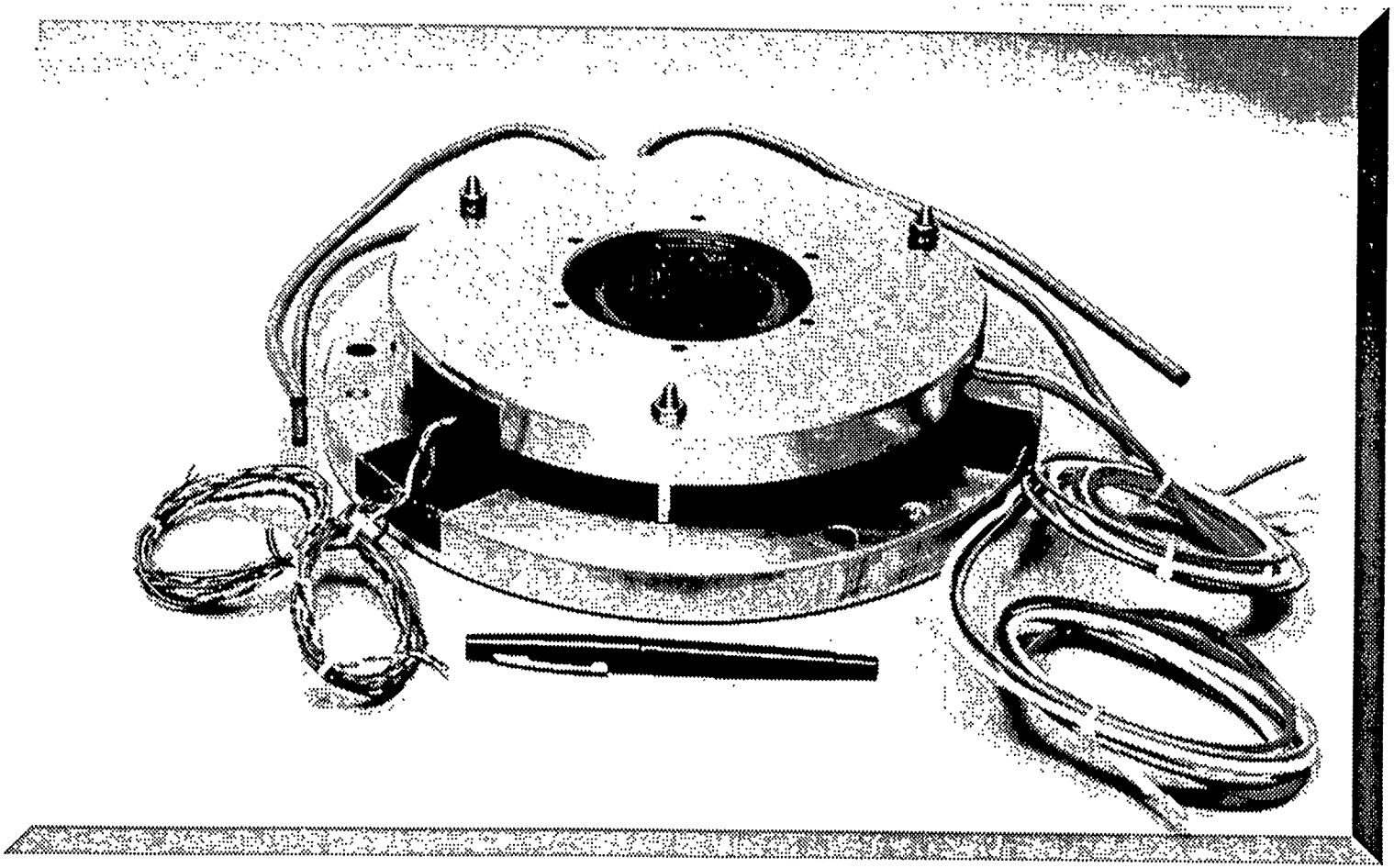

95% Efficient, 0.17 kg / kW

ornl

Flywheel Energy Storage
Integrated Flywheel/Generator Rotor Assembly

DWG. NO. K/G 93-829 GSS

CARBON/EPOXY COMPOSITE FLYWHEEL RIM

Outside dia.	27 in.
Inside dia.	24 in.
Axial Length	4 in.
Weight	28 lb
Operating Speed	1200 m/s
Frequency	33,000 rpm
Stored Energy	8 MJ (22 kWh)

PERMANENT MAGNET MOTOR/GENERATOR

50 kW Constant Power Output
Weight = 18 lb
95% Efficiency
SmCo Magnets
Wire wound, slotted stators
(Water Cooled)

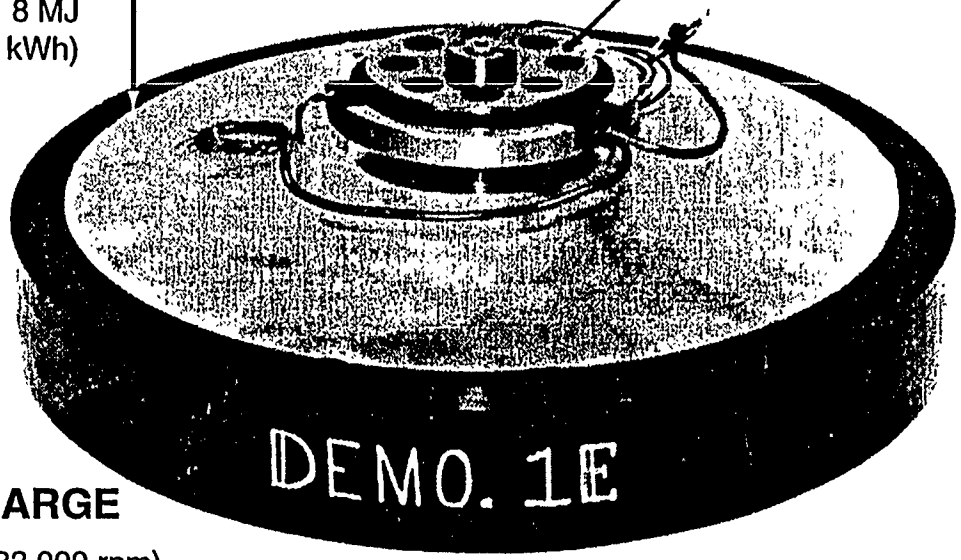

PLANNED DISCHARGE

Begin with 8 MJ stored (33,000 rpm)
End with 1.4 MJ stored (14,000 rpm)
Delivered output of 6 MJ (1.67 kWh)
50 kW for 120 sec

ornl

Air Conditioning System With Improved Efficiency For Hybrid Electric Vehicles

DWG. NO. K/G 95-830 GSS

- Partners:
  - Smart Power Systems
  - Advanced Vehicle Systems, Inc.
  - Chattanooga Area Regional Transportation Authority
  - Electric Transit Vehicle Institute
  - ORNL's Power Electronics Center

ornl

Air Conditioning System With Improved Efficiency For Hybrid Electric Vehicles

DWG. NO. K/G 95-831 GSS

- Objective:
  - Develop a modular air conditioner system for an electric bus that is so efficient and lightweight that the need for existing on-board propane-powered sources will be eliminated.

- Approach:

  1. Smart Power Systems' advanced two-stage centrifugal air conditioner

  2. ORNL's axial gap permanent magnet motor

  3. ORNL's soft-switched inverter

  4. Demonstrate in AVS bus operated by CARTA, coordinated by ETVI

ornl

Analysis, Simulation, And Design Software

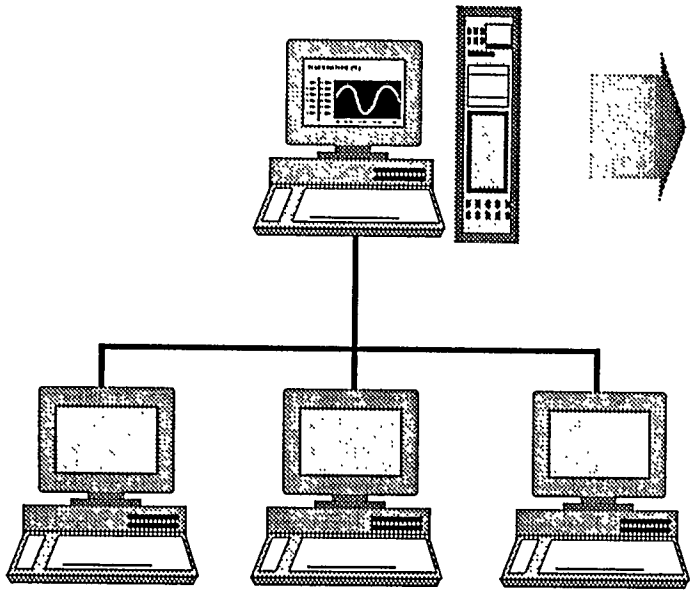

- SABER
- ISSPICE
- MATLAB/SIMULINK
- MATHCAD
- AUTOCAD
- MAPLE
- LABVIEW
- ALTERA Logic Design Simulation and Programming
- PSPICE
- SIMNON
- NISSA
- EMAG
- ORCAD
- ACSL
- PROTEL

K/PH 94-4346

Software System

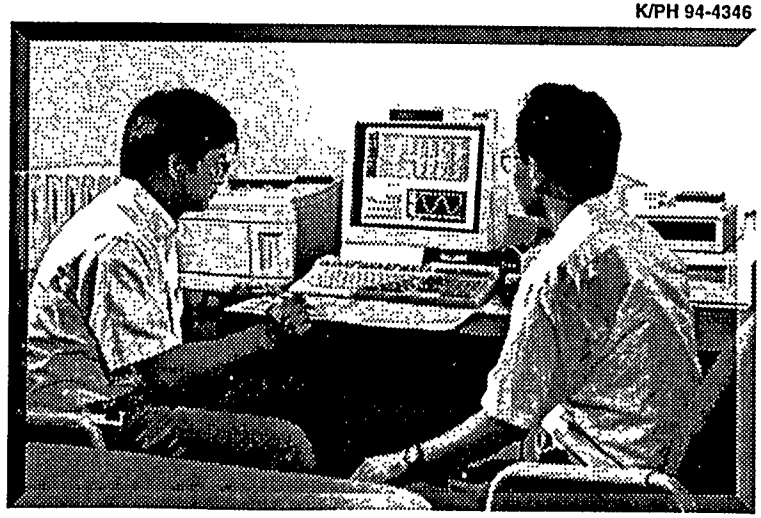

DWG. NO. K/G 95-427 GSS

ornl

Multilevel Converters

DWG. NO. K/G 95-835 GSS

- A new era of power conversion is coming with the emergence of multilevel converters into the high power arena.
- In general, the multilevel converter synthesizes the staircase voltage with multilevel capacitor voltages as opposed to multiple transformer couplings.
- Both computer simulation and hardware implementation have proven the predicted features of various multilevel converter configurations.
- Immediate applications can be directed to STATCON, asynchronous power system interconnection, power flow controller, and utility compatible ASDs.
- Future research can be directed to multilevel converters for HVDC transmission, active filter, and energy storage applications.

ornl

Advanced HVDC Converter Technology

DWG. NO. K/G 95-453 GSS

K/PH 95-2141

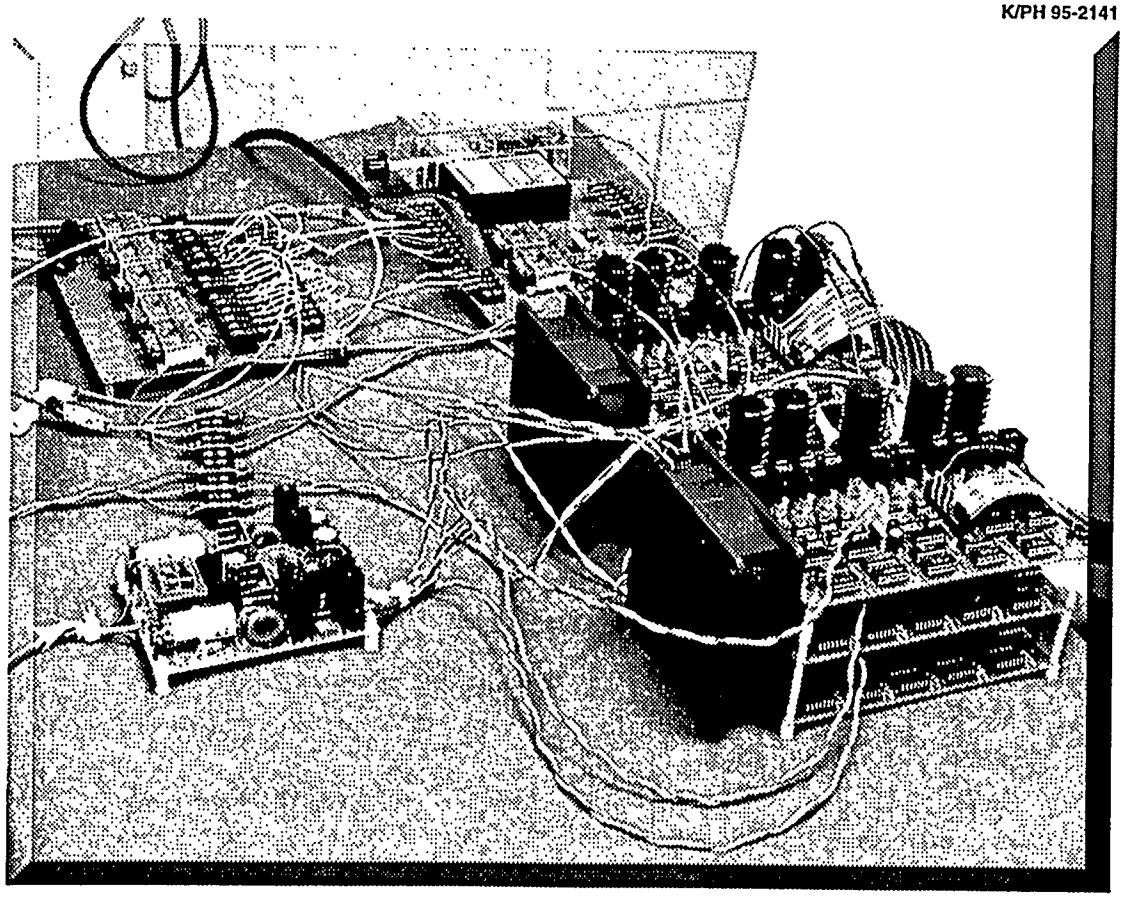

A 6-Level Converter Back-to-Back Intertie Circuit For HVDC

ornl

Comparison of Power Component Requirements per Phase-Leg for Three Multilevel Converters

Converter Type	diode-clamp	flying-capacitors	cascaded-inverters
Main switching devices	$(m-1)\times 2$	$(m-1)\times 2$	$(m-1)\times 2$
Main diodes	$(m-1)\times 2$	$(m-1)\times 2$	$(m-1)\times 2$
Clamping diodes	$(m-1)\times(m-2)$	0	0
DC bus capacitors	$(m-1)$	$(m-1)$	$(m-1)/2$
Balancing capacitors	0	$(m-1)\times(m-2)/2$	0

ornl

Experimental Line Voltages and Current of Cascaded-Inverter Based 11-Level SVG

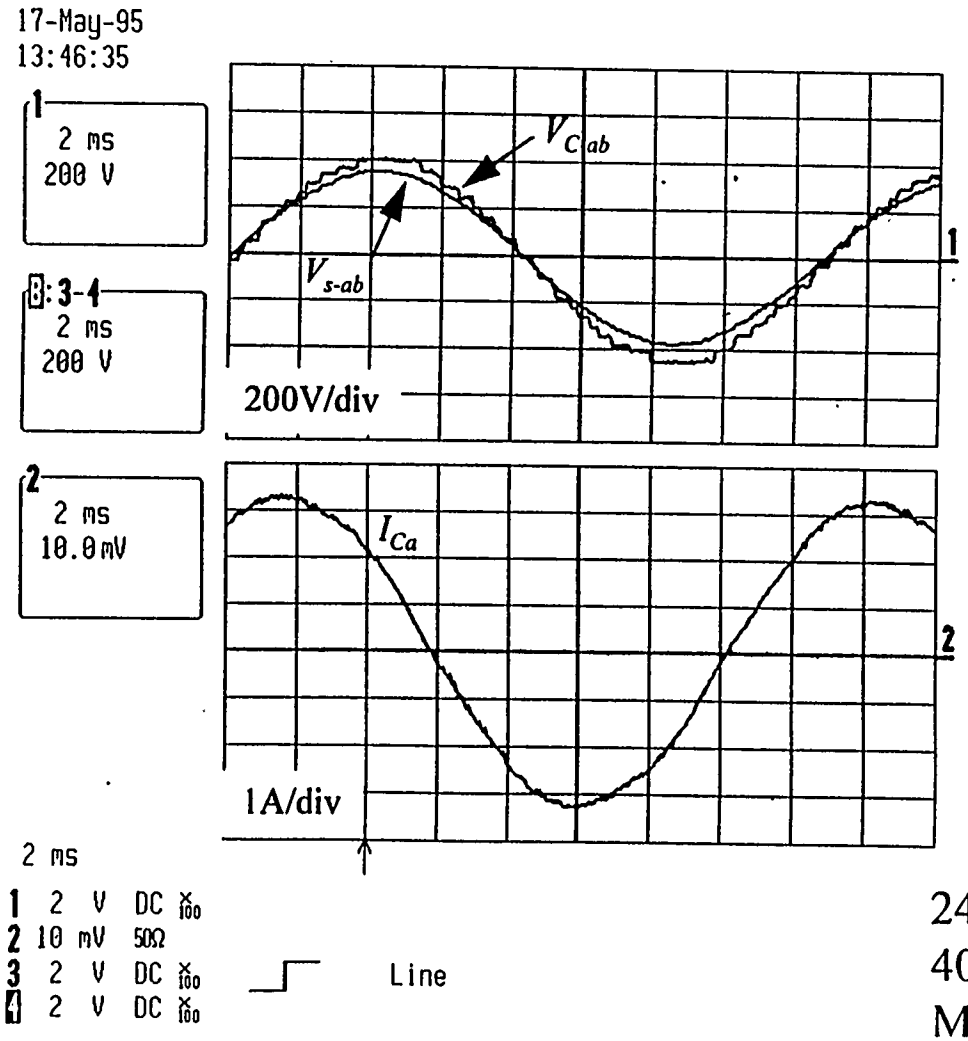

$V_{S\text{-}ab}$
$V_{C\text{-}ab}$
(200V/div)

I_{Ca}
(1A/div)

240Vac, 2.2Aac
40Vdc, 32mH (20%)
MI=0.915

ORNL Proposed Soft-Switching Inverter That Solves Problems Associated With Other Technologies And Achieves the Following Features

DWG. NO. K/G 95-836 GSS

- Utilizes the device stray capacitance
- Uses small size auxiliary switch
- No overvoltage or overcurrent
- Compact size
- High reliability
- High efficiency

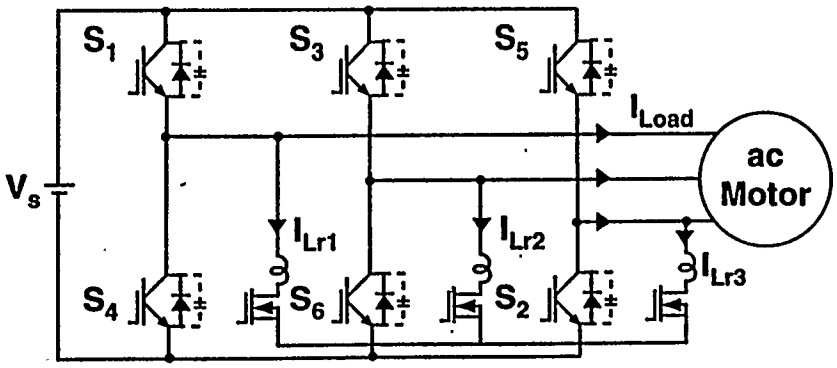

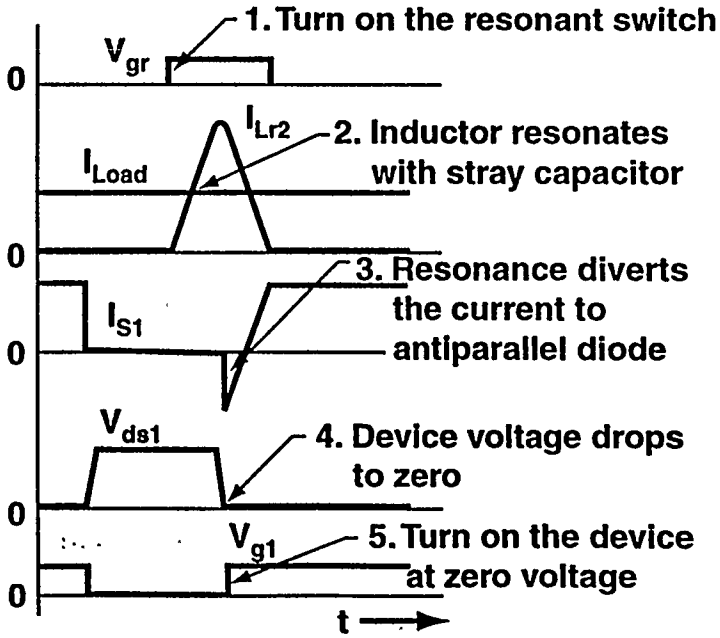

ornl

Efficiency As A Function Of Output Power For Soft And Hard Switching Inverters Operating At 15 kHz

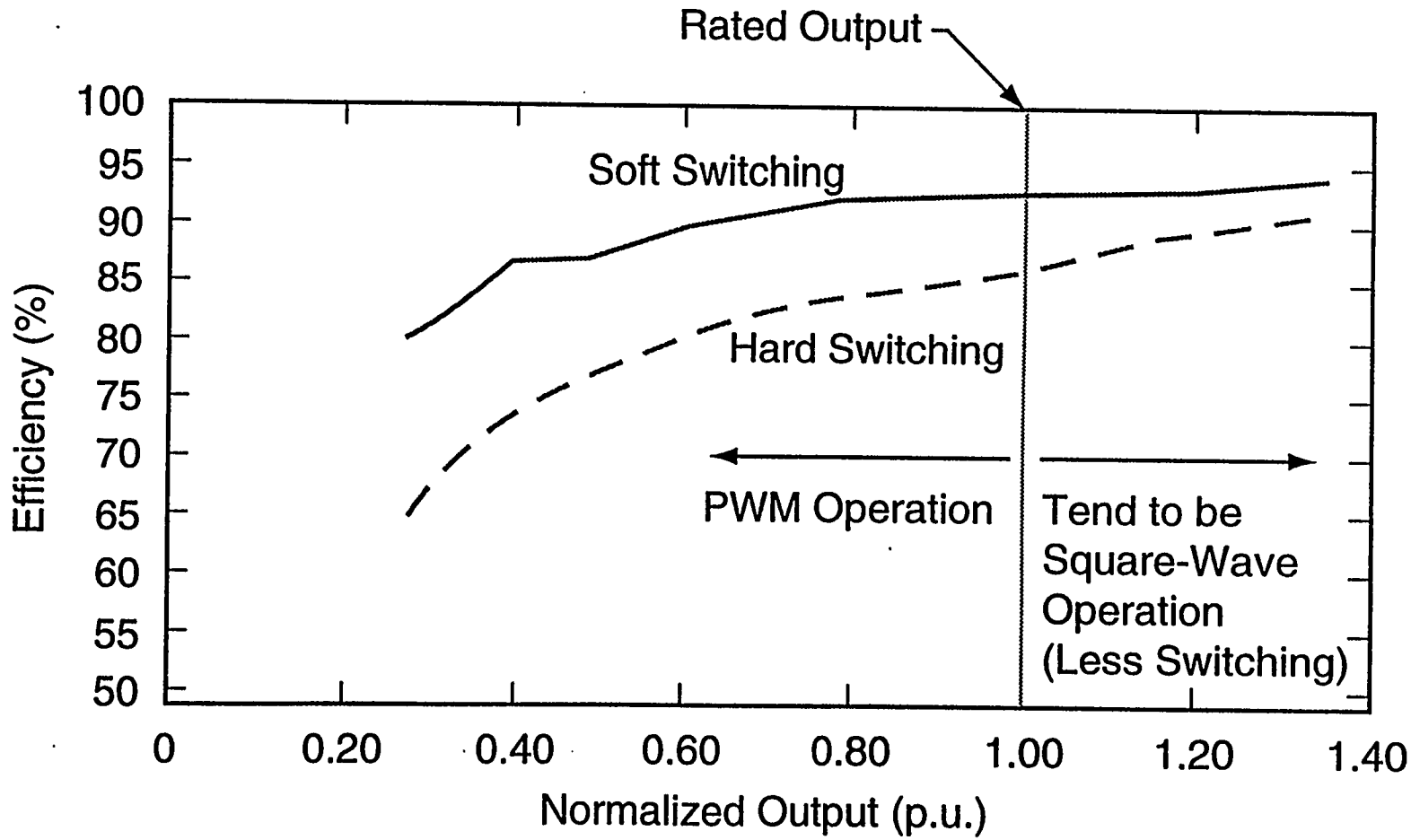

DWG. NO. K/G 95-958 GSS

ornl

Power Electronics Building Block (PEBB)

DWG. NO. K/G 95-837 GSS

- Federal interagency program
- University and National Labs support
- Industry participation
- Achieve for power electronics what the integrating of transistor circuits has done for the computer

ornl

PEBB

- ORNL PEC is supporting the Hybrid Vehicle's Enabling Technologies Program (Bill Siegel and David Hamilton)
- ORNL PEC is providing one of two selected topologies.
- ORNL PEC is one of only two applications test sites.
- Plans for the first PEBB demonstration in August 1996.

DWG. NO. K/G 95-839 GSS

ornl

PEBB

- Military requires standardization and simplification of design for adjustable speed drives.
- DOE interest for transportation and utility applications.

DWG. NO. K/G 95-838 GSS

ornl

ORNL's Resonance Snubber Inverter

DWG. NO. K/G 95-840 GSS

Power Rating: 100 kW

Power Density: 150 W / in.^{3} (9 x 12 x 6 in.)

Specific Power: 11 kW / kg (20 lb)

Efficiency: 98% (+15% at half speed / load
+4% at peak speed / load)

EMI: Greatly reduced

ornl

DWG. NO. K/G 95-826 GSS

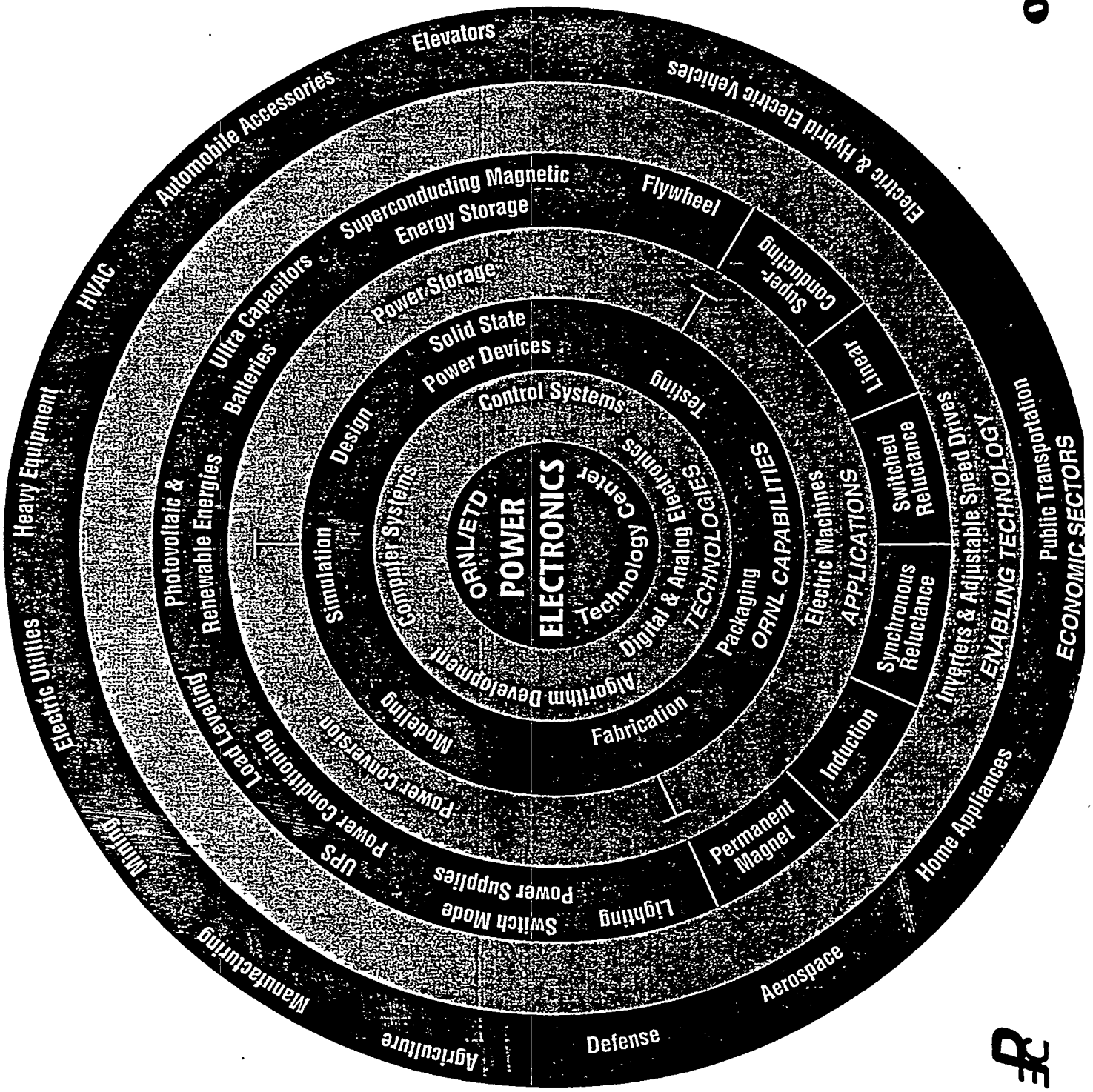

Design and Operation of a Flywheel Energy Storage Demonstration System

Joseph Tecza

Paul Lewis

Mechanical Technology Incorporated

Dr. Ralph Flanagan

Flywheel Energy Systems Incorporated

Dr. Fred Strnisa

New York State Energy Research and Development Authority

Energy Storage System Goals

- Moderate energy storage
  - About 1 to several tens of kWh
- Moderate power levels
  - A few to a few hundred kW
- Compact size
- High efficiency, low loss
- Cost-competitive

Candidate Applications

- Hybrid electric vehicles
- Zero emission vehicles
- Short-term load leveling
- Power outage ride-through
- Cold environment energy storage

Flywheel EMB System

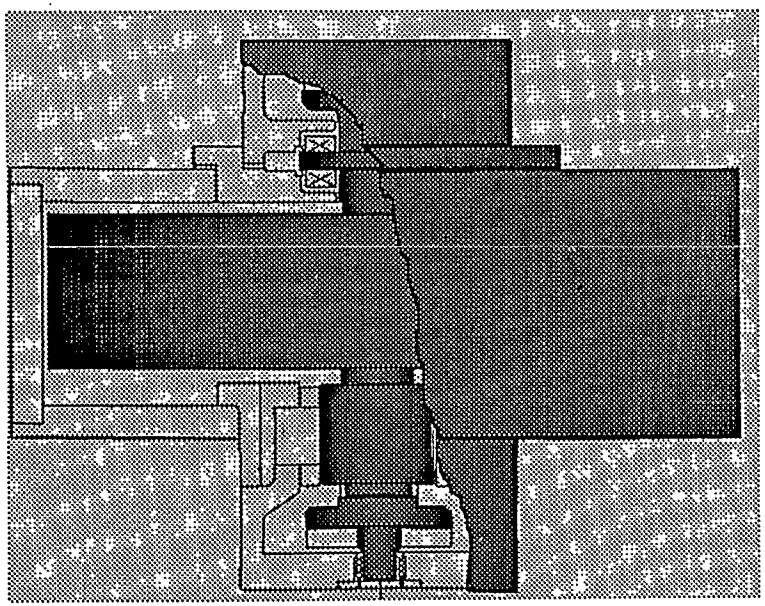

- Composite rim
- High speed m/g
- Magnetic bearings
  - Primary
- Ball bearings
  - Backup
- Housing
  - Vacuum
  - Containment

Advantages of Flywheel Systems

- High specific energy density
- Compact package
- No deep discharge penalties
- Low operating & maintenance costs
- Safe and environmentally benign
- Potentially cost-competitive

Project Goals

- Provide a demonstrator test bed
  - Use proven hardware
- Demonstrate energy storage/retrieval
  - Mechanical, thermal and electrical performance
- Validate magnetic bearing concepts
  - Passive radial bearings
  - Active axial bearing

EMB Demonstrator Elements

- Flywheel rim & hub
  - Flywheel Energy Systems Inc.
- Shaft, bearings, structure
  - Mechanical Technology Inc.
- M/G and controller
  - Obtained from Inland Motor
- Sponsors: NYSERDA and MTI

Rim & Hub Construction

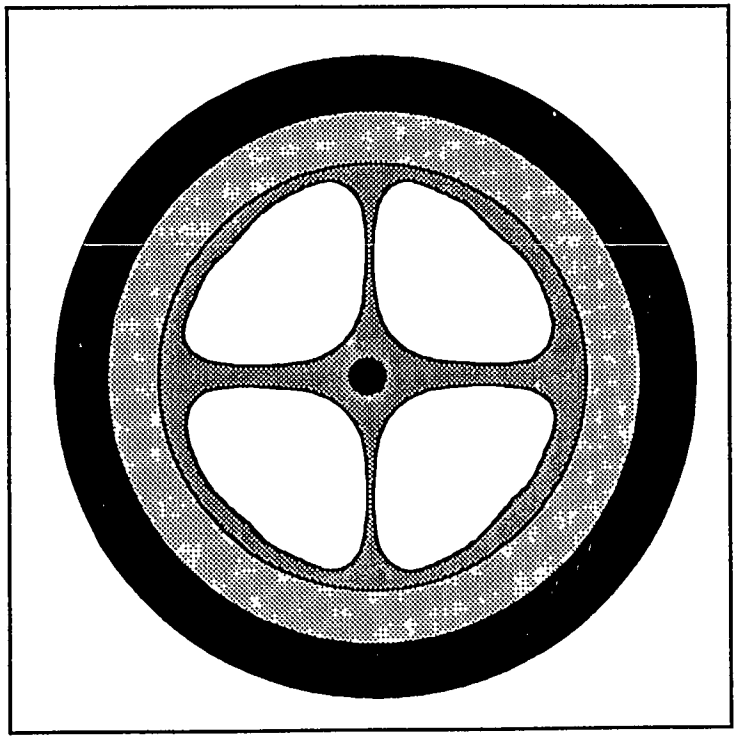

- Rim construction:
  - Two rings
    - » Graphite/epoxy outer
    - » Glass/epoxy inner
    - » Interference fit
- Hub construction
  - "Flex rim"
    - » Aluminum
    - » Single piece

Rim Design Parameters

- Dimensions:
  - O.D. = 15.5 in.
  - I.D. = 9.97 in.
  - Length = 3.50 in.
- Weight 25.14 lb.
- Energy 418 Wh
- Deep Discharge
  - 100,000 cycles
- Speeds:
  - Rated 30,000 rpm
  - Tip speed 618.6 m/s
  - Ultimate 50,925 rpm
- Operating Temps.
  - Minimum -40 °C
  - Maximum 100 °C

Magnetic Bearing Suspension

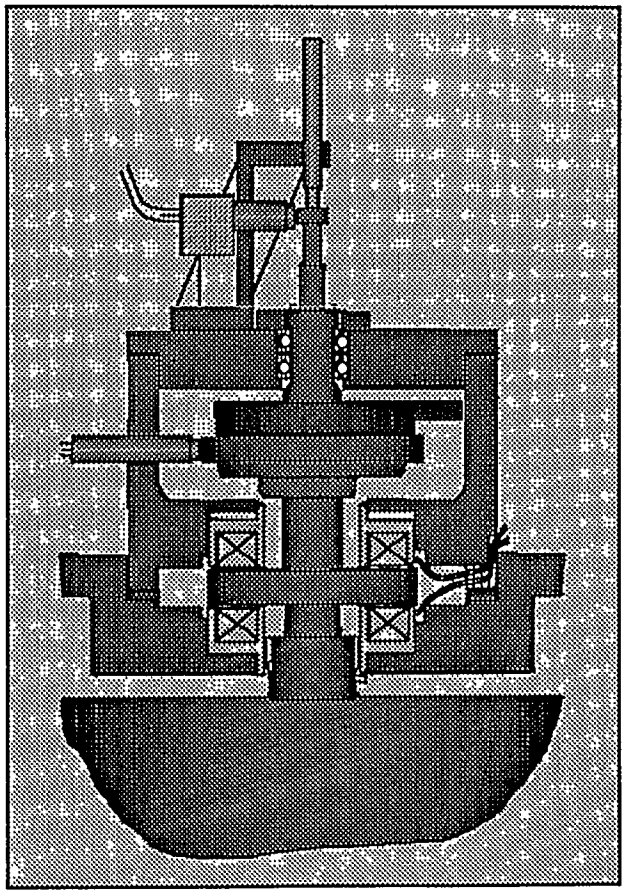

- Radial bearings:
  - "Pancake" design
  - Good load capacity
  - Radially damped
  - Very low loss
- Axial bearing:
  - Needed for stability
  - Simple, low loss
- Ball bearing backup

Flywheel Rim and Hub

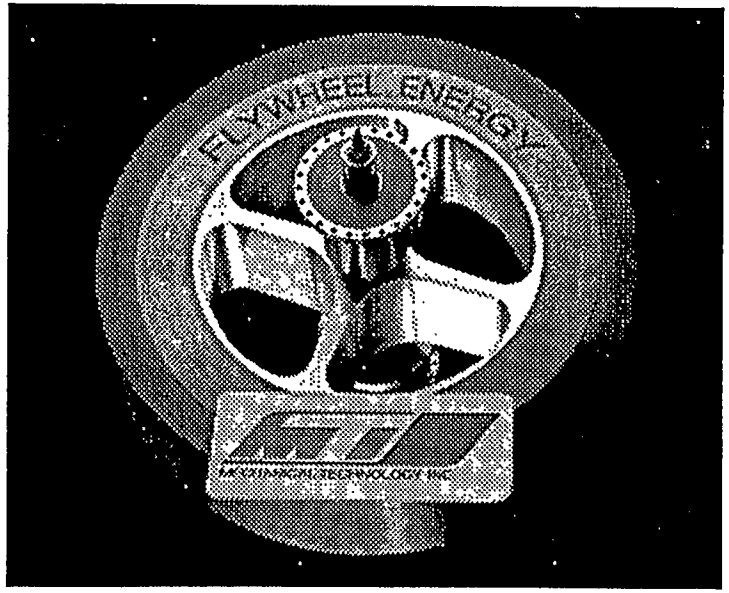

System Mechanical Assembly

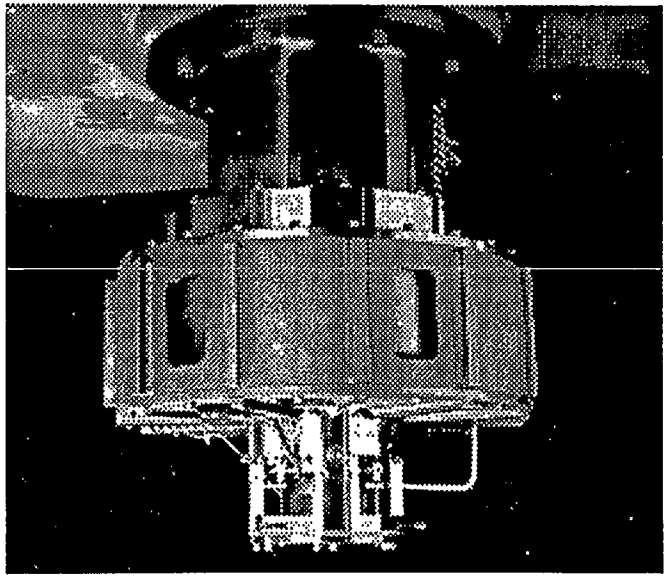

System Electrical Design

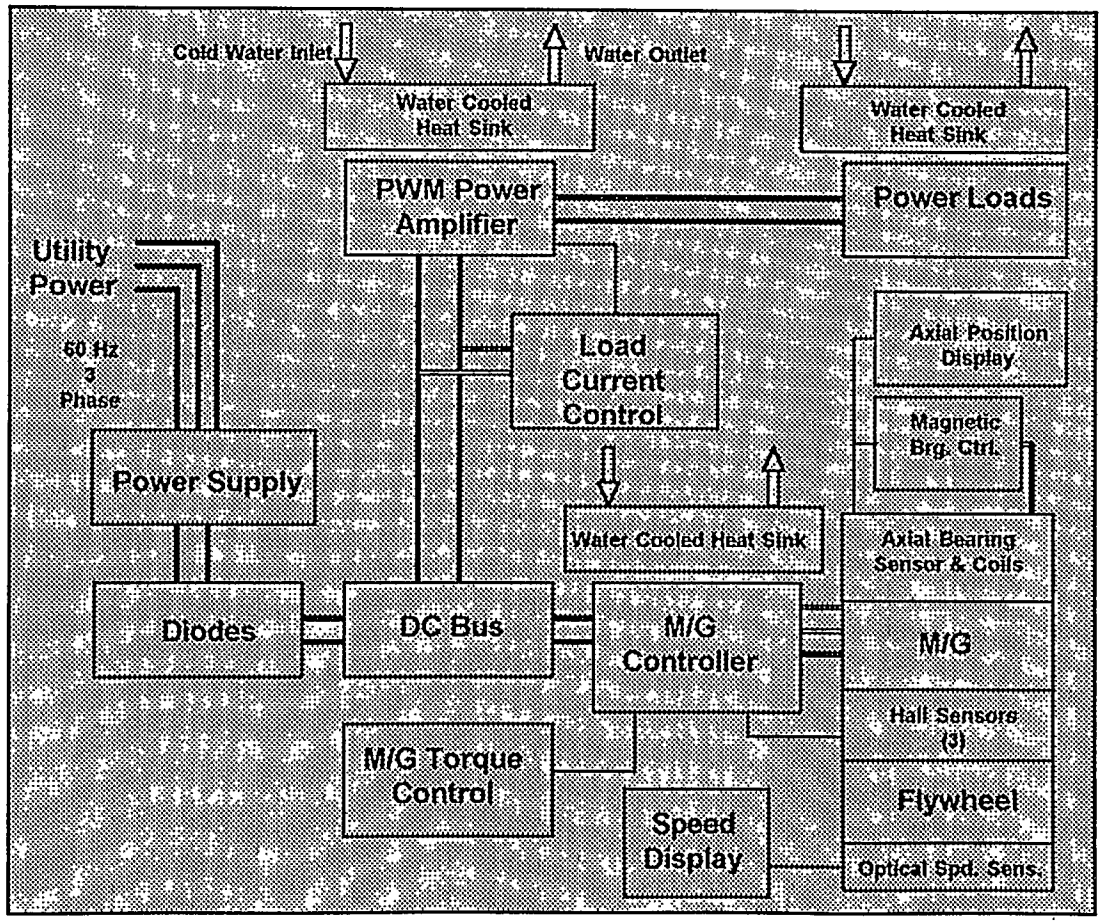

Test Goals

- Qualify EMB as energy storage device
- Demonstrate stable operation
- Demonstrate bearing performance
- Measure dynamic behavior
- Characterize motor/generator
- Test the m/g control system

Test Summary

- Alignment and balancing techniques developed
  - Critical speed as predicted
- Thermal and structural dynamic problems addressed
- Electronics & load control system worked well
- No problems with power transients
- "Sensorless" axial bearing prototyped

Test Results

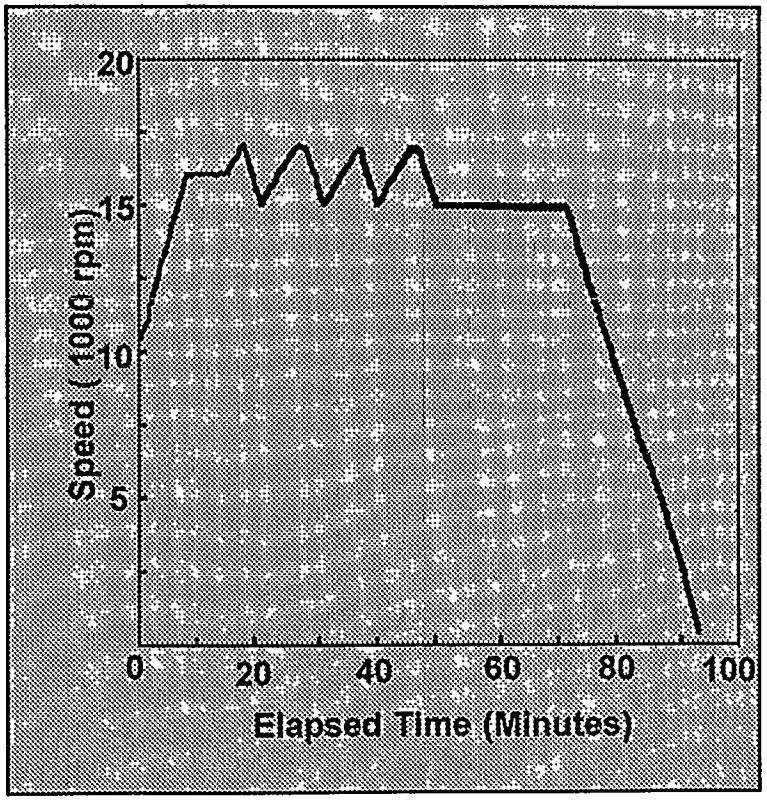

- Energy transfer test
- Operation
  - Between speed points
  - At set torque
- Simulates load - leveling operation

Next Steps

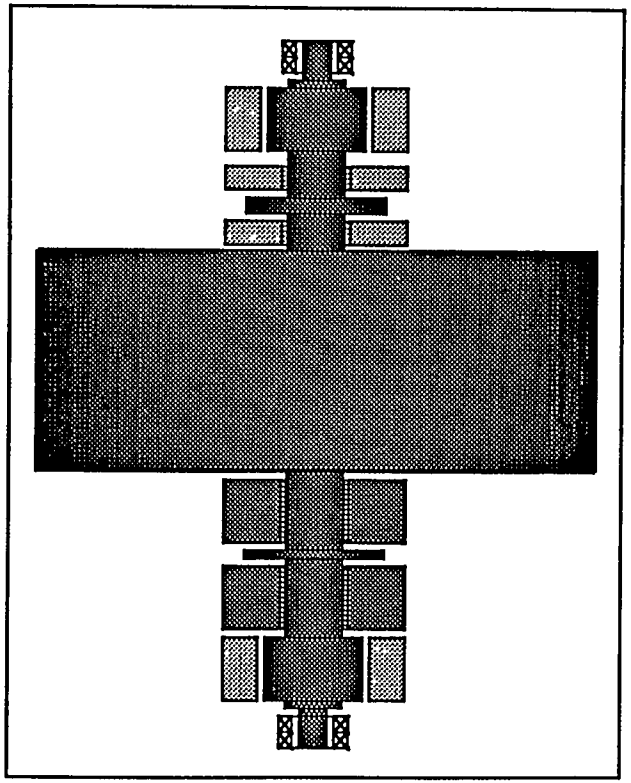

- Upgrade power
- Demonstrate with electronic hardware
  - Power quality ride-through
- Develop into commercial offering

Test Results

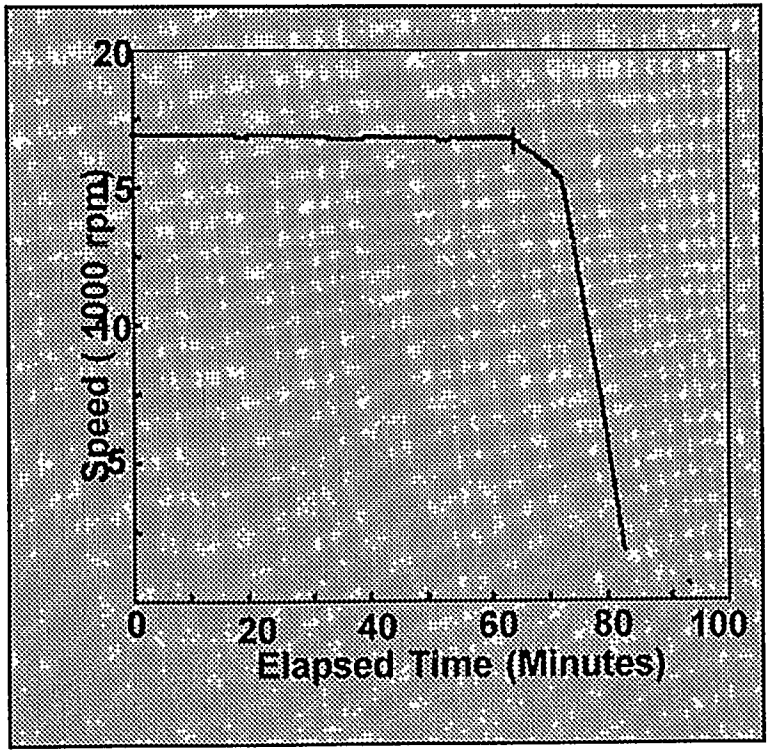

- Steady-state operation
- Constant speed, minimal torque
- Test heating due to m/g rotor losses

Conclusions

- Flywheel & hub worked well
- Balance procedure developed
- Dynamic characteristics as predicted
  - No effect of power transients on vibration
- Heating of rotor a significant problem
  - Correctable by modifications and in future designs

Flywheel Energy Storage Systems

Gary M. Colello

October 1995

SatCon Technology Corporation

161 First Street : Cambridge, MA 02142 : TEL: (617) 661-0540 : FAX: (617) 661-3373

SatCon Highlights

- Founded in 1985; Public Corporation, 1992
- Massachusetts Institute of Technology Draper Laboratory Spin-Off
- Well positioned to address commercial opportunities with leading edge technology
- Research & Development orientation .. rapidly shifting to commercial products
- Focus: electromechanical technologies

Expertise in High Power-Density Electromechanical Technology

- Leading edge technology for high-power, compact, light-weight products:
  - Flywheel energy storage systems
  - Motors & generators
  - Magnetic bearings
  - Turbine alternators
  - Active suspensions

SatCon

Advantage of Flywheels over Batteries

- Life is not a function of temperature - flywheel has 3 to 4 times the life
- Can quickly recover from deep discharge - recharge 10 to 20 times faster than batteries
- Do not require periodic maintenance - designed for 7 to 10 year maintenance free operation
- State of charge is easily measured
- No capacity degradation
- Do not contain corrosive, toxic or explosive materials e.g.. acid or hydrogen gas

SatCon

Flywheel Energy Storage

- While flywheels have been used for centuries, practical, compact systems are a recent development
- A new generation of flywheels are being driven by new technology:
  - High strength-to-weight composite materials
  - Magnetic materials
  - Fabrication techniques
  - Microprocessors
  - Electromagnetic designs

Applications for Flywheel Energy Storage Systems

- Battery Replacement - “Plug for Plug”
- UPS Standby Power Supplies
- Load Leveling
- Power Quality
- Satellites
- Transportation

SatCon

Flywheel Energy Storage System Block Diagram

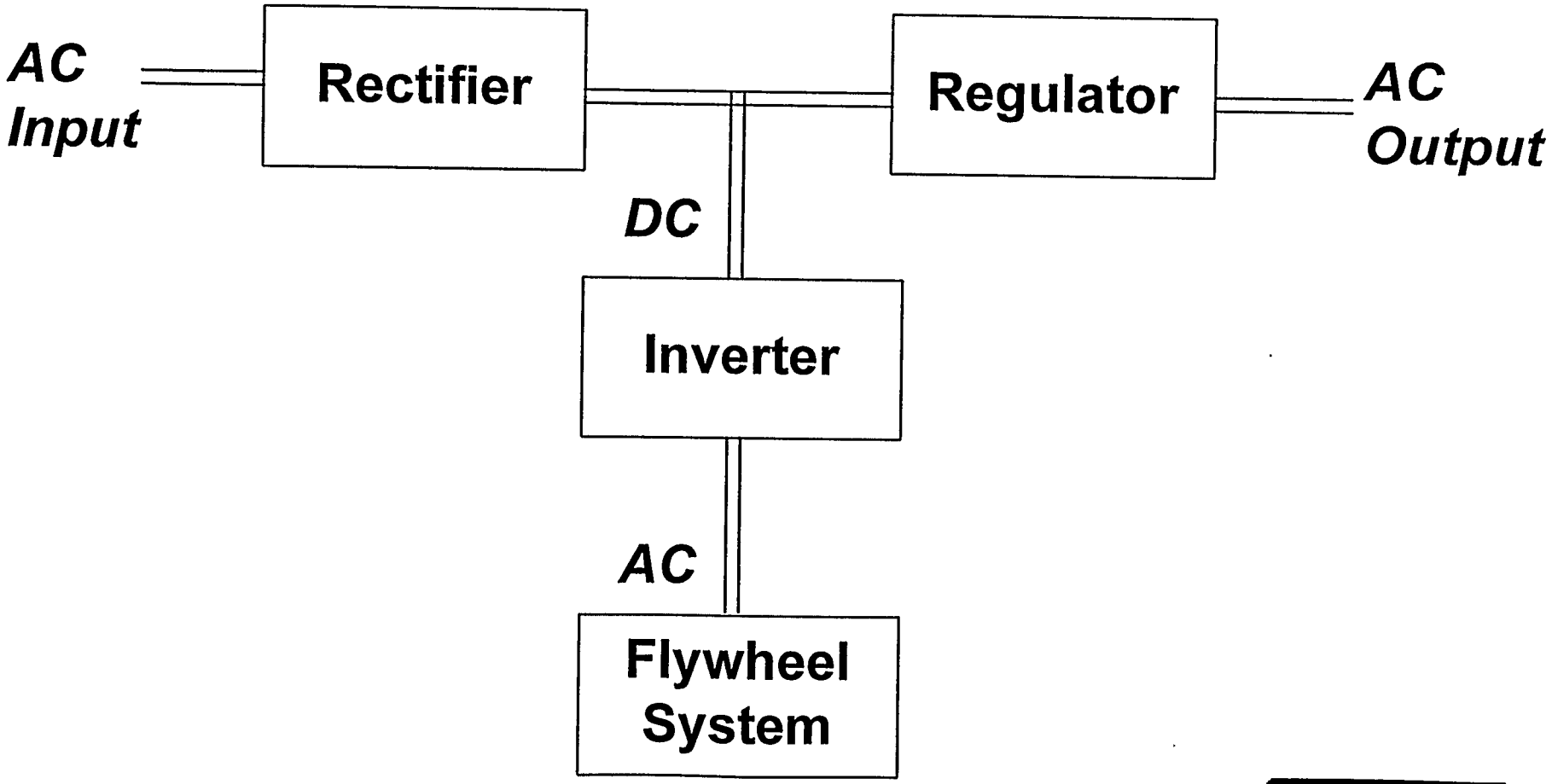

Flywheel Energy Storage System
Patriot Hybrid Electric Drivetrain

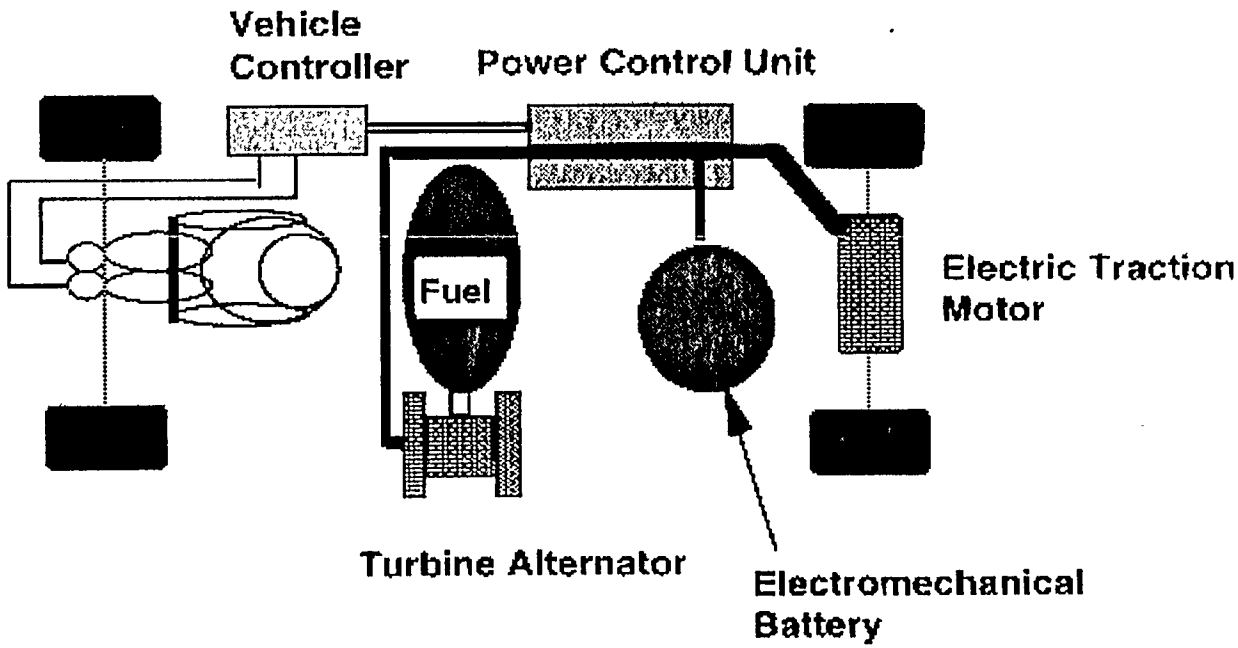

Flywheel Energy Storage
Key Elements

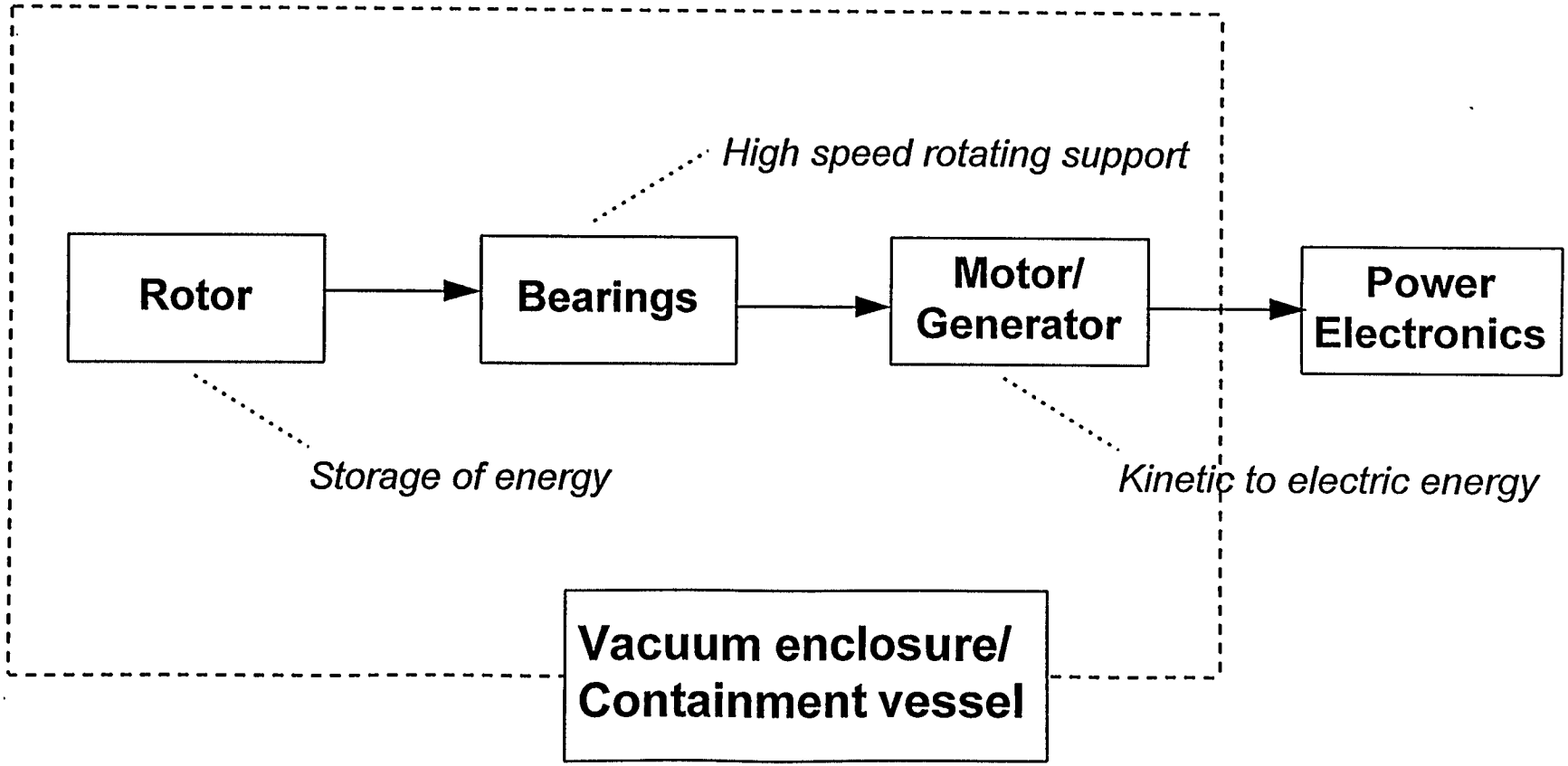

Flywheel Demonstration Unit
Flywheel Components

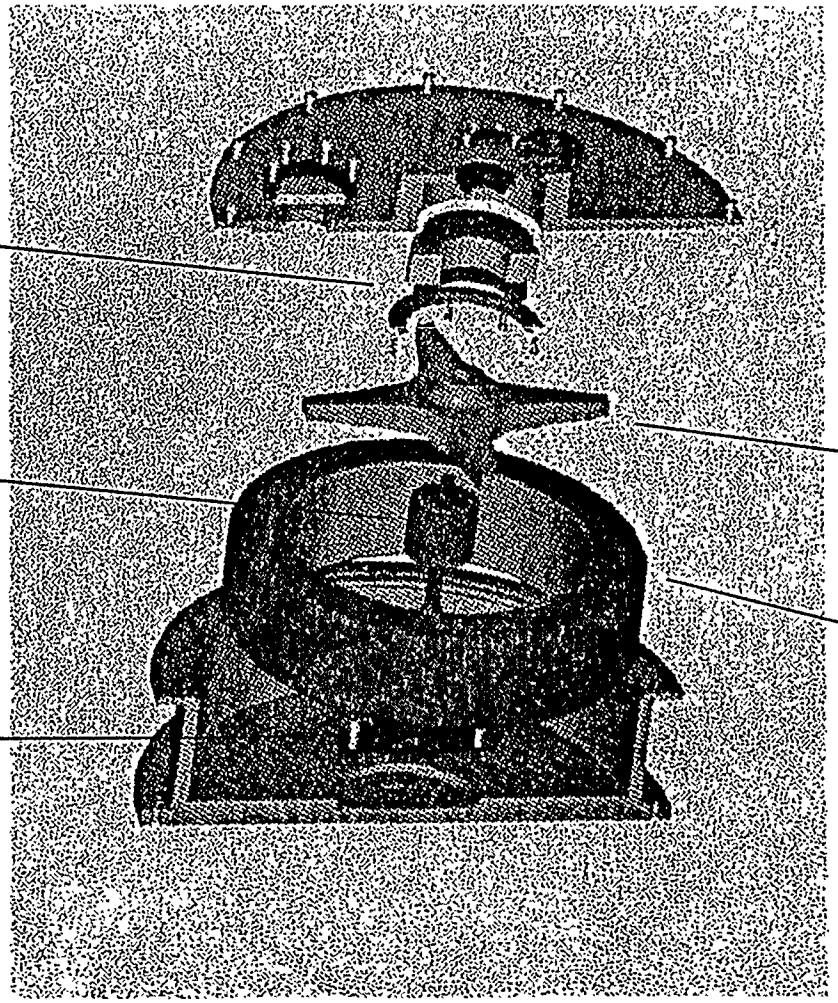

SatCon

Flywheel Programs
Momentum Wheel on Magnetic Bearings

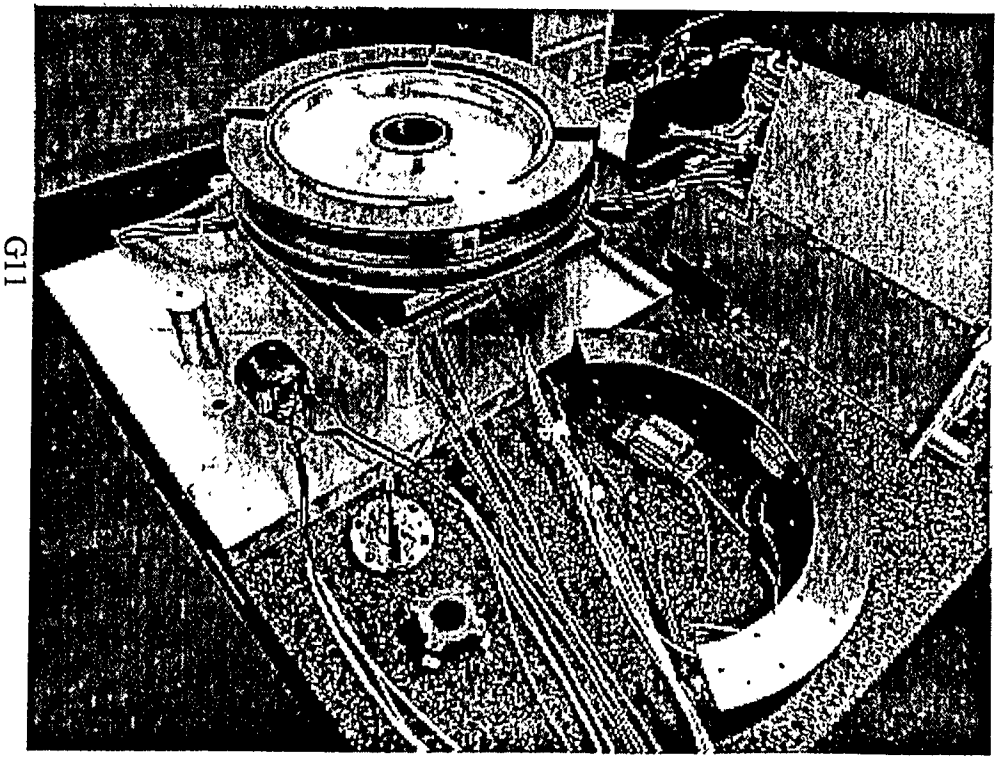

- Compares to Teldix DR-68 momentum wheel
- Low vibration momentum wheel
  - magnetic bearings
  - four thrust bearings along periphery
  - radial bearings for x, y
  - permanent magnet brushless torque motor to transfer momentum

SatCon

Flywheel Programs
Integrated Power and Attitude Control System

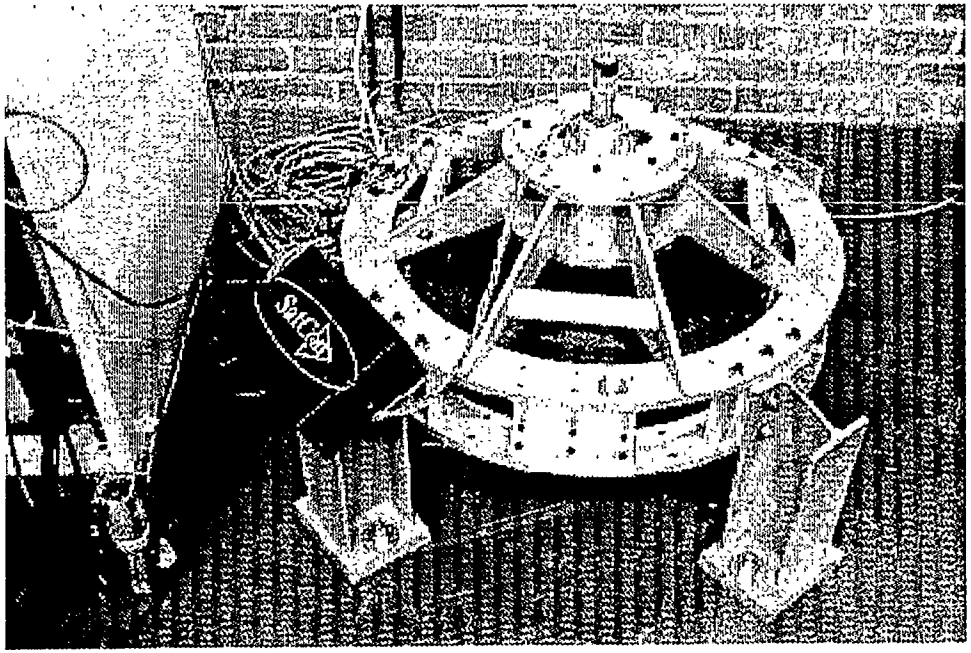

- Provides momentum control for space application
- UPS for space platform
- Composite rim ~ 70 kg
- Magnetic bearing
- Brushless permanent magnet motor/generator

SatCon

Flywheel Programs
Patriot Hybrid Vehicle Flywheel

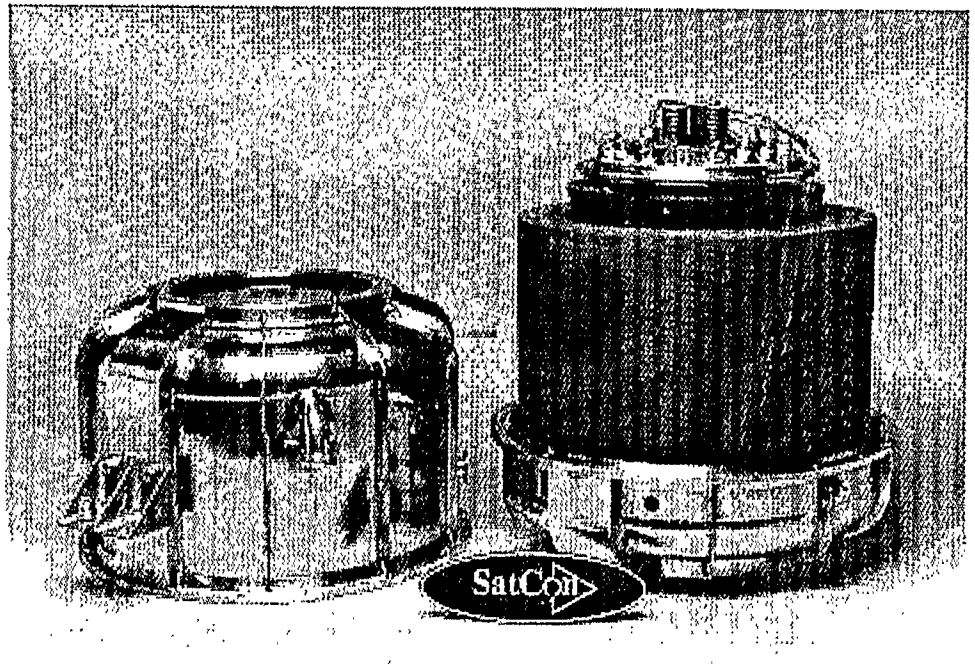

- Provides DC bus stability
- 3 kw-hrs usable
- 500 hp brushless permanent magnet motor/generator
- Mechanical bearings

SatCon

Flywheel Programs
System Demonstration Unit

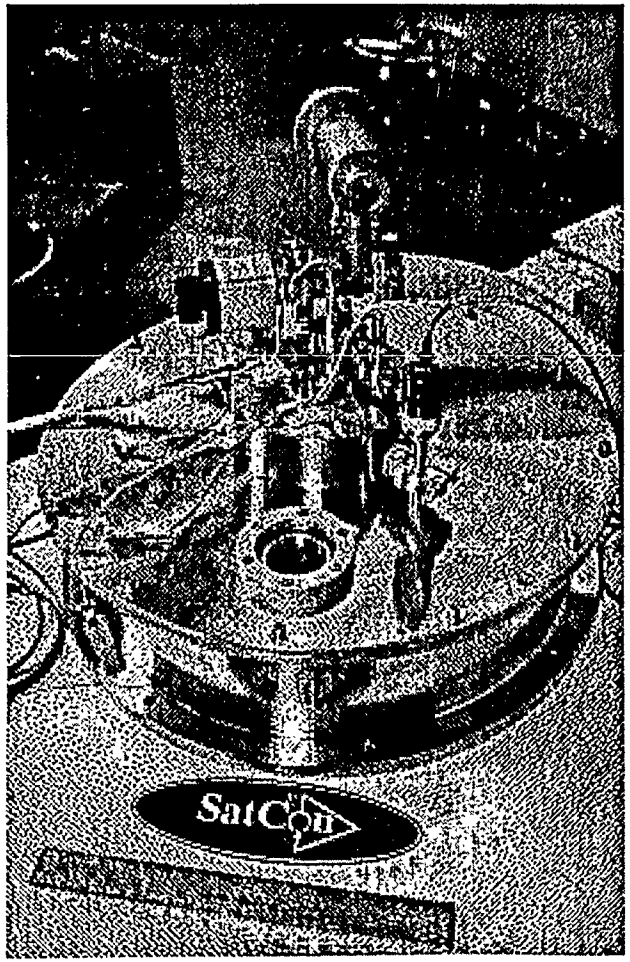

- Configured as an uninterruptible supply of "wall" power
- Commercial electronics module integrated to achieve desired performance
- Flywheel performance:
  - maximum speed 30,000 rpm
  - usable energy 335 W-hr
  - output rating 500W

SatCon

System Block Diagram

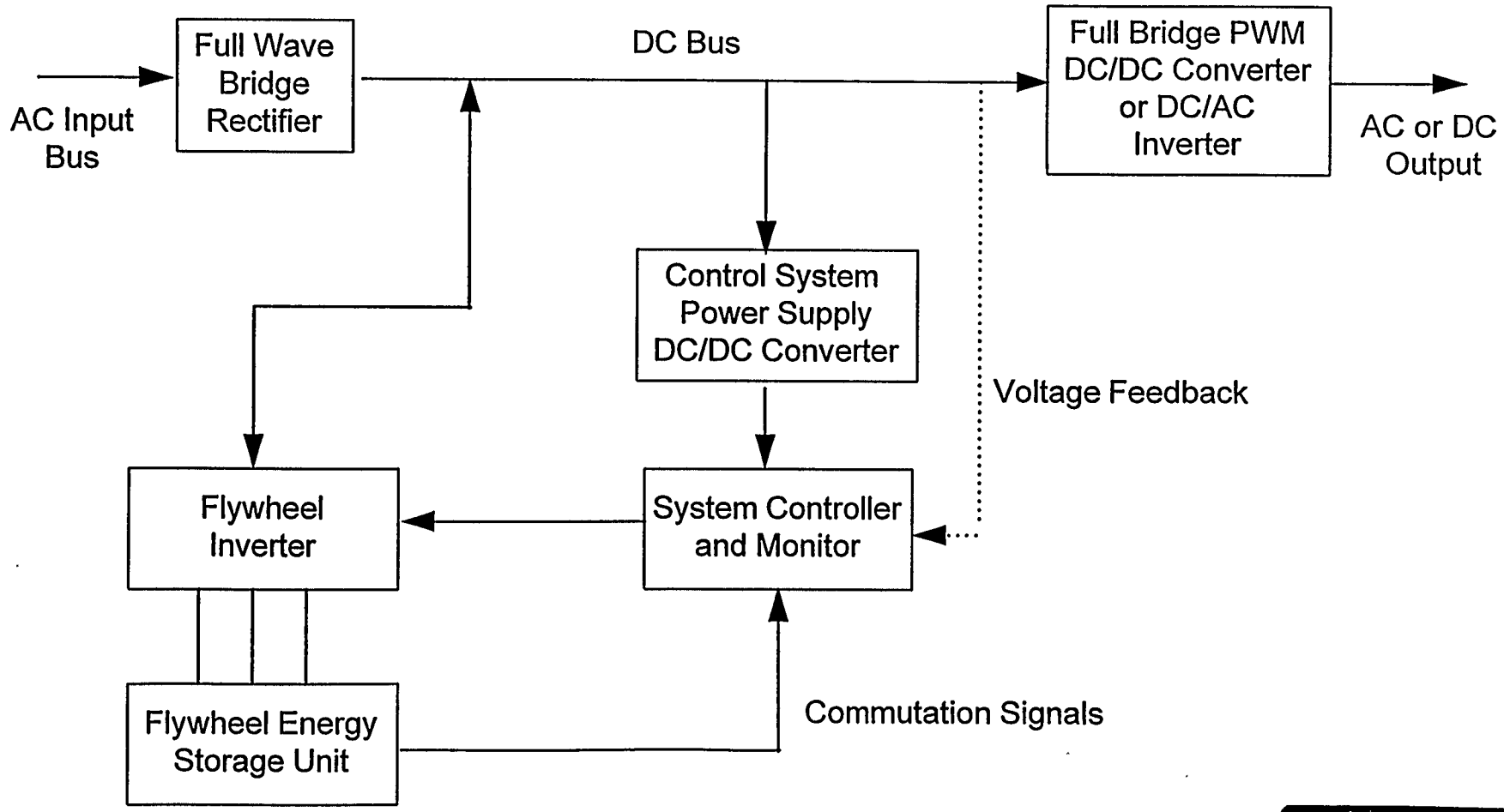

Development Challenge
Flywheel Evaluation

- Current flywheel systems are typically laboratory prototypes or technology demonstrations
  - Performance (weight and/or cost) dominated designs
  - Little relation to commercial service environments or standards
- Commercial sale of flywheel energy systems requires close attention to "fitness for service"
  - Design provenance - certification of "accepted" methods
  - Safety - burst elimination or containment
  - Economics - development, fabrication, use, & disposal costs
  - Serviceability/Life - Operational procedures & retirement criteria
  - Performance - energy & power density
- Several system approaches possible in addressing fitness
- Gaps exist in understanding of "fitness" phenomena

Development Challenges
"Fitness" Strategy Issues

- Sure-safe "code" design
  - No generally accepted design procedures/properties for composites
  - Sure safe criteria (e.g. no matrix cracking) limit performance
  - Relationship among NDE, defects, performance effects not well known
- Aggressive design, burst avoidance
  - Testing to keep ahead of commercial units may be onerous
  - Relationship among NDE, defects, performance effect not well known
  - Diagnostic indicators for composites poorly understood
- Aggressive design, burst containment
  - Effect of fabrication quality on flywheel failure modes uncertain
  - Weight-efficient containment strategies for composites undeveloped
- Combination strategies

Development Challenges
Technology Challenges for "Fitness" Evaluation

- Identify defect types by rotor configuration & process
  - Fiber architecture & process influence
- Characterize NDE methods for rotor health determination
  - Density measurement to verify fiber volumes
  - Micrography & image analysis to validate fiber architecture
  - Ultrasonic methods for overall quality and/or defect presence
  - X-ray computer tomography for defect identification & sizing
- Evaluation of defect influence on performance
  - FEA of benchmark defects
  - Testing of defective coupons
  - Defective rotor spin testing
  - Burst strength & propagation rates vs. defect
- Development of remedial action and/or retirement strategies

Development Challenges
Computer Tomography of Graphite Composite Wheel

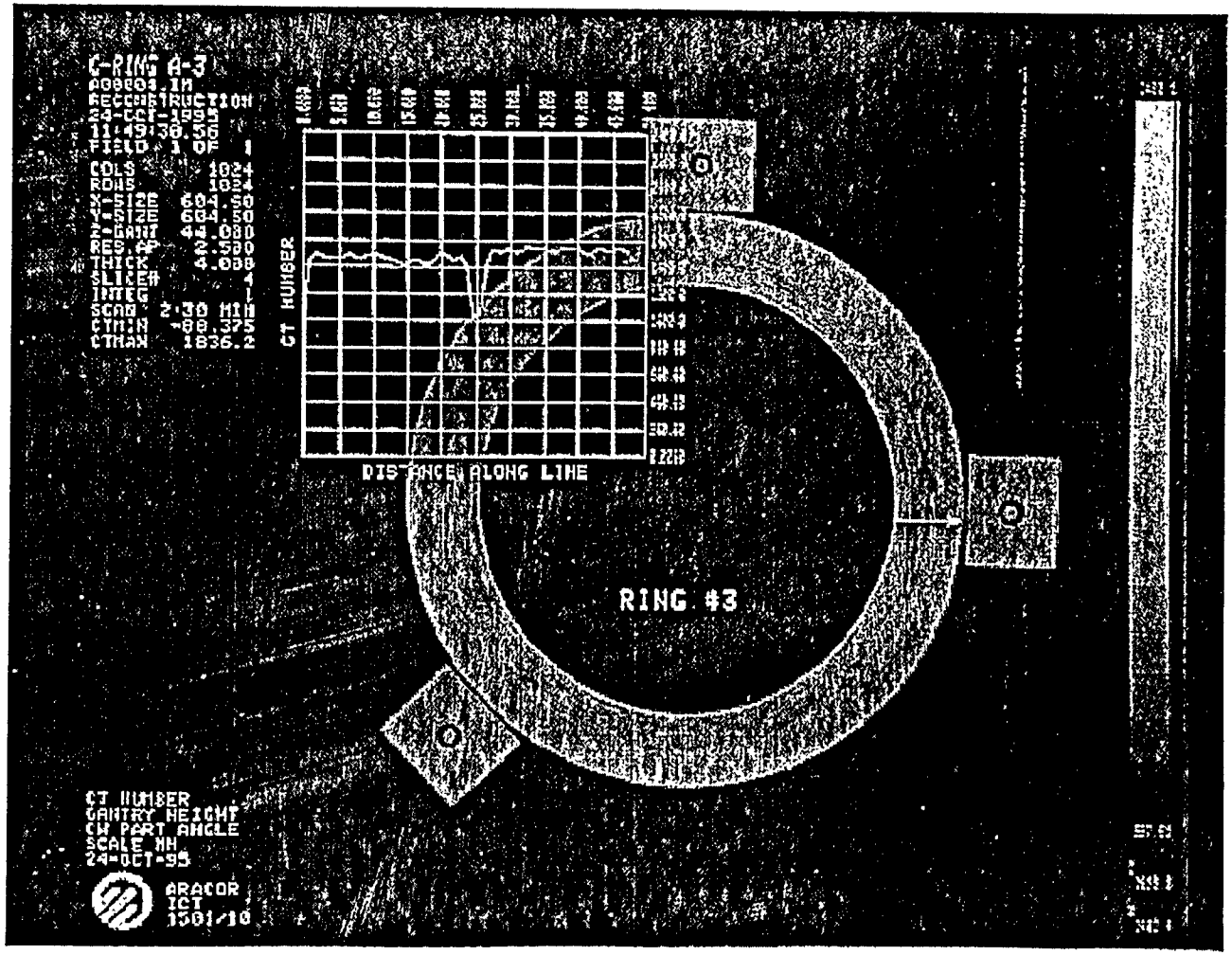

SatCom

Development Challenges
Operational Acceptance

- Safety related goals
  - Design criteria, process reliability, and inspection to minimize probability of in-service failure
  - In-service diagnostics to identify potential problems and allow remedial action (i.e. slow down)
  - Robust containment to minimize the damaging consequences of a catastrophic burst failure

TcSUH

Hybrid Superconducting Magnetic Bearing (HSMB) and Its Frictional Energy Loss in Flywheel Applications

Wei-Kan Chu

Harold Z. Xia
Ki Bui Ma
Quark Chen

Rodger Cooley
Clay Fowler
Chase McMichael

Texas Center for Superconductivity at the University of Houston

Acknowledgment: (HTS material)

Paul C. W. Chu, Ruling Meng

Introduction

- Mechanism of Superconducting Magnetic Bearing (SMB): 'Flux Pining' Effect

- Concept of Hybrid SMB: Levitating Force from Permanent Magnets and Stabilization from High Temperature Superconductors (HTS)

- Applications: Flywheel Energy Storage (FES) for Load Leveling, Un-interruptable Power Supply (UPS)

- Advantages of Hybrid SMB:
  - * No Physical Contact between Rotational and Stationary Parts
  - * Totally Passive Magnetic Bearings (No Control Circuit)
  - * High Levitating Force
  - * Extremely Low Friction Loss (Our Bearing Design Criterion: FES Prototype: Energy Loss <1% Per Hour; 2 kWh Module: Energy Loss < 0.1% Per Hour)

Conventional SMB: (Field-Cooled) Force & Stiffness From Magnet/HTS Interaction

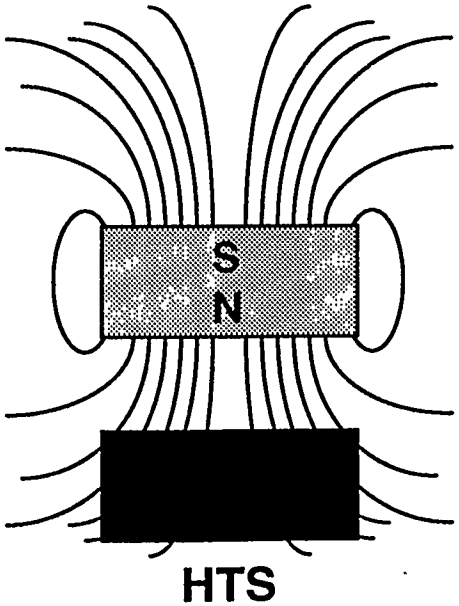

Hybrid SMB: Levitating Force From Permanent Magnets And Stabilization From HTS

Repulsive Lift

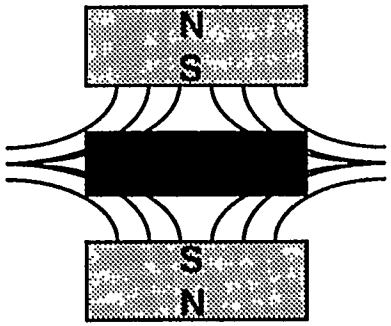

Attractive Lift

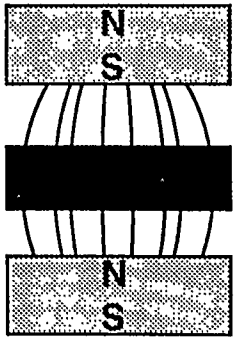

Rotor-Bearing Configuration

TcSUH

- ◆Field-Cooled HTS
- ◆Hybrid SMB
- ◆Weakly Unstable Levitation: Attractive Force + Repulsive Force = Load

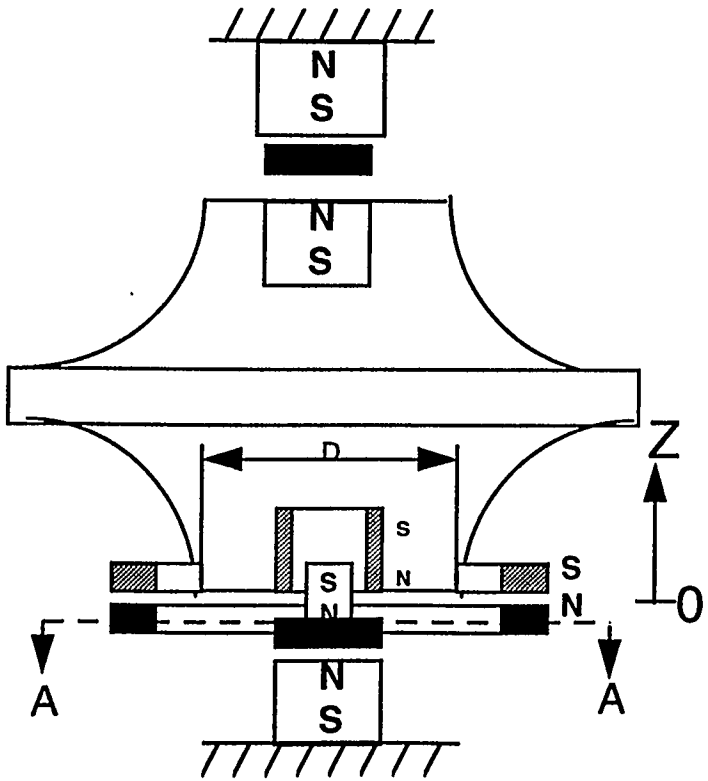

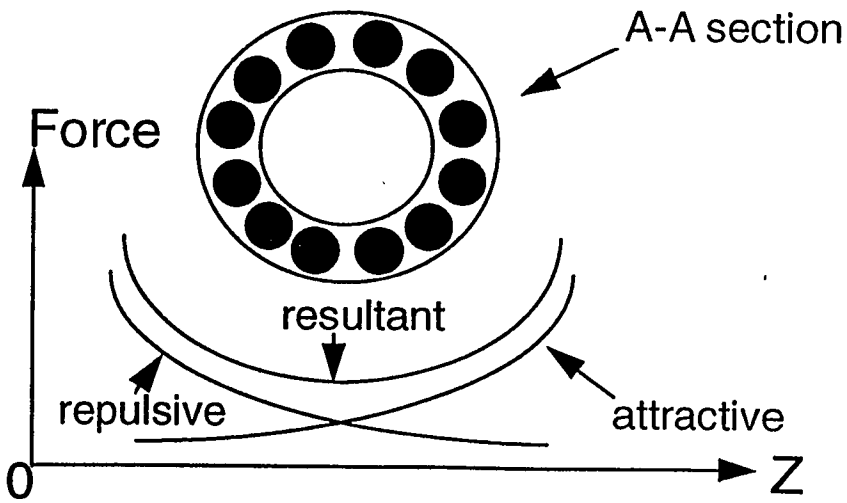

LEVITATION FORCE FOR MELT-TEXTURED YBCO DISKS

Sakama

Ending Date: 4/8/95

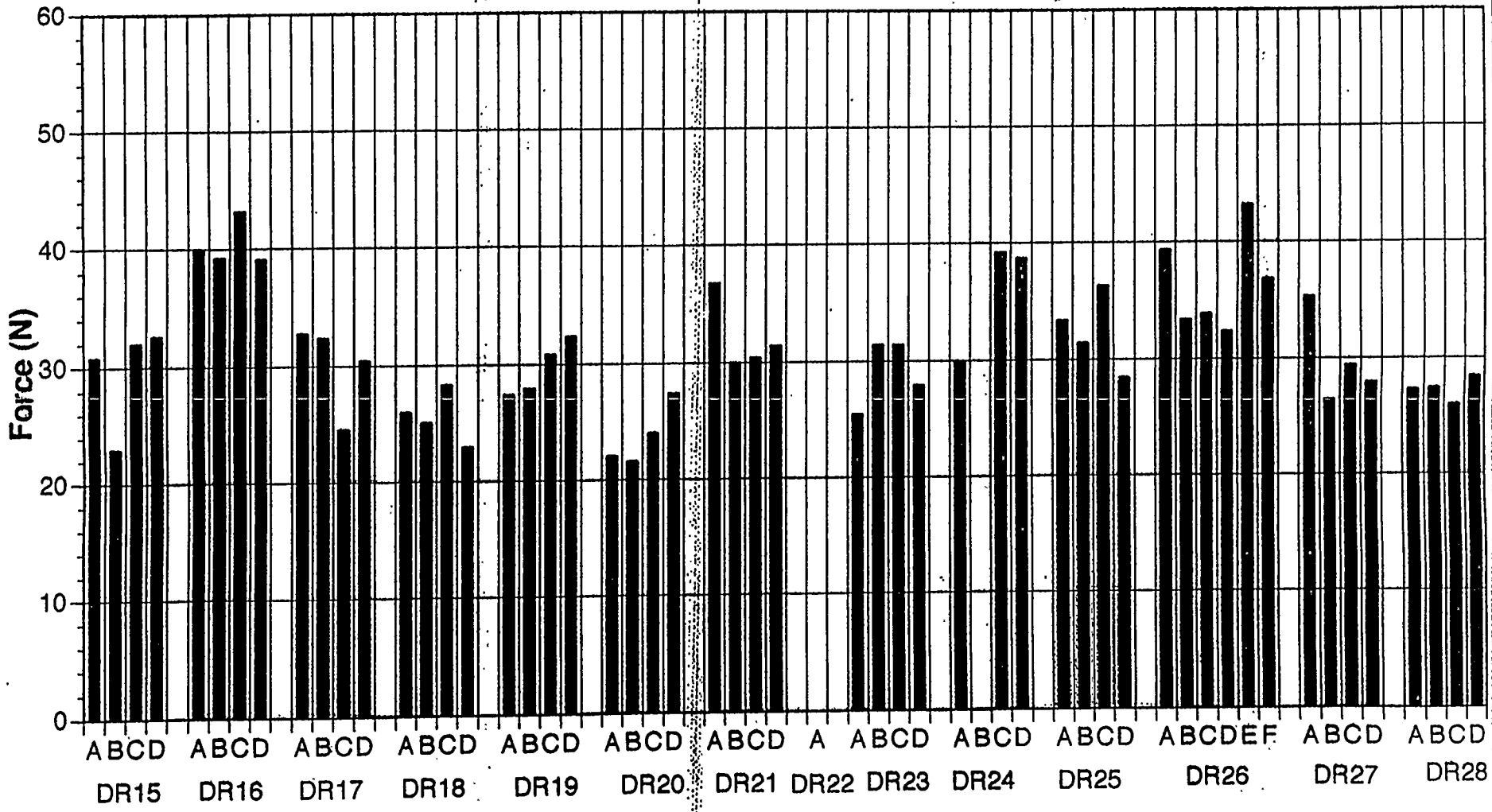

- The forces for DR22 and DR24-B are over 50 N.
- Part of total 86 samples.

Manufacturing Div. **TcSUH**

9H

HIGHEST TRAPPED FIELD IN MELT TEXTURED YBCO DISKS

Salama

Ending Date: 4/8/95

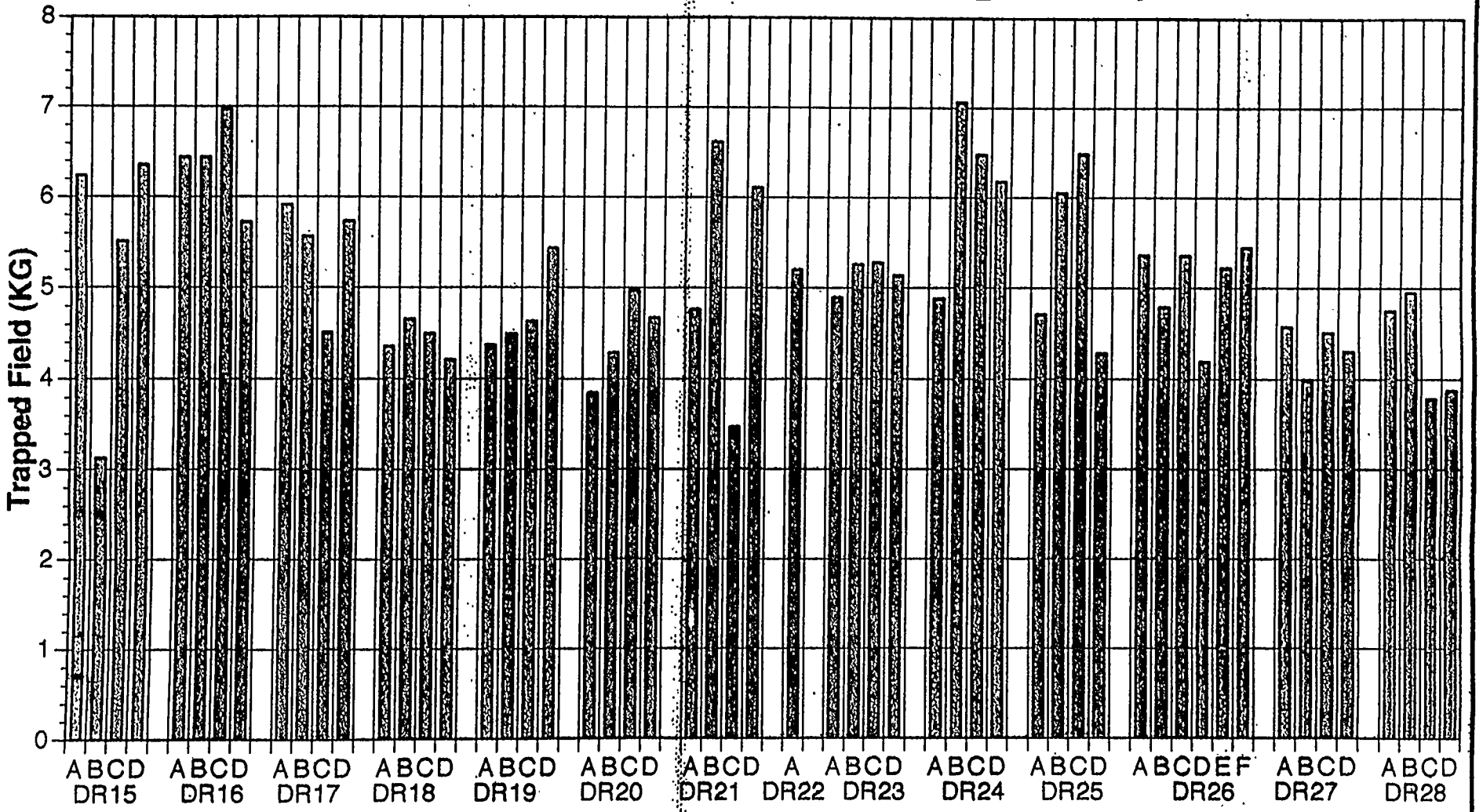

• Part of total 86 samples.

Manufacturing Div. TcSUH

TcSUH

Dimensions,* Forces and Stiffness for Bearing Components

	Top PM 3 rings OD x ID x T# 3.81x1.59x2.86	Top HTS 1 ring D x T## 3.81x1.91x0.64	Bottom PM 3 rings 3.81x2.54x0.94 3 disks 3.81x1.91 2 pins 1.65x1.91	Bottom HTS 1disk 3.81x0.64	Additional 12 HTS disks 1.91x1.91 1 PM ring 10.16x6.985
Levitating Force(N)	93.1	<9.8	93.1	<9.8	
Axial Stiffness Ka (N/mm)	-7.7	10~15	2.2	16~20	30
Radial Stiffness K_r (N/mm)	3.8	2	-1	6~8	15

* all dimensions are in cm
# outer diameter x inner diameter x thickness
diameter x thickness

TcSUH

A FES Prototype Using Hybrid SMB

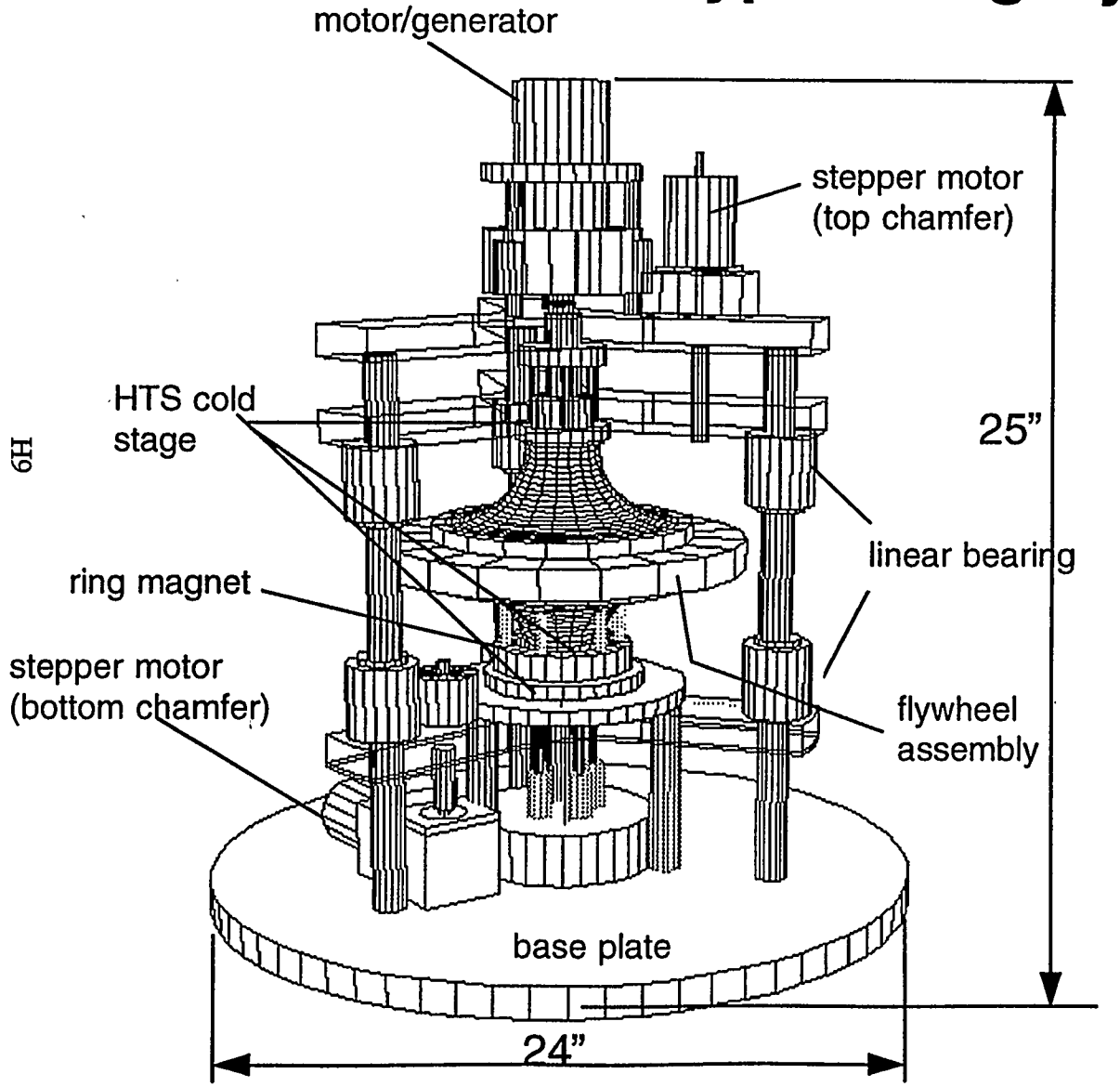

- Flywheel: 19 kg (42 lb)
- Moment Of Inertia: I_p=0.13 kg.m^2
- Bearings: Hybrid SMB
- Engage Mechanism: Electro-Magnetic Clutch
- Cryogenic System: LN_2 Circulation
- Vacuum: Rotary And Diffusion Pumps
- Operation: Controlled Step Motors

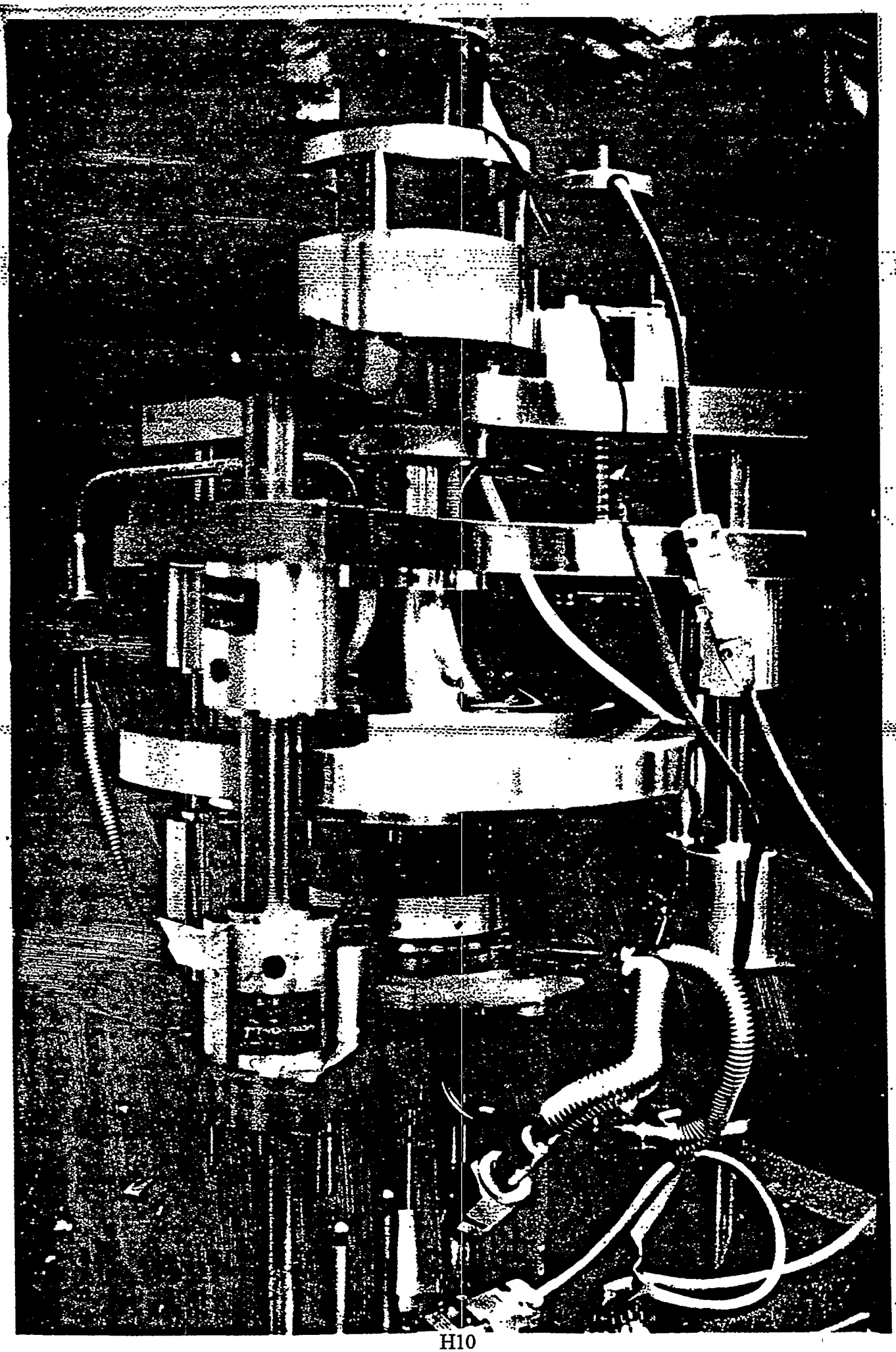

Rotor Spin-down in Different Vacuums

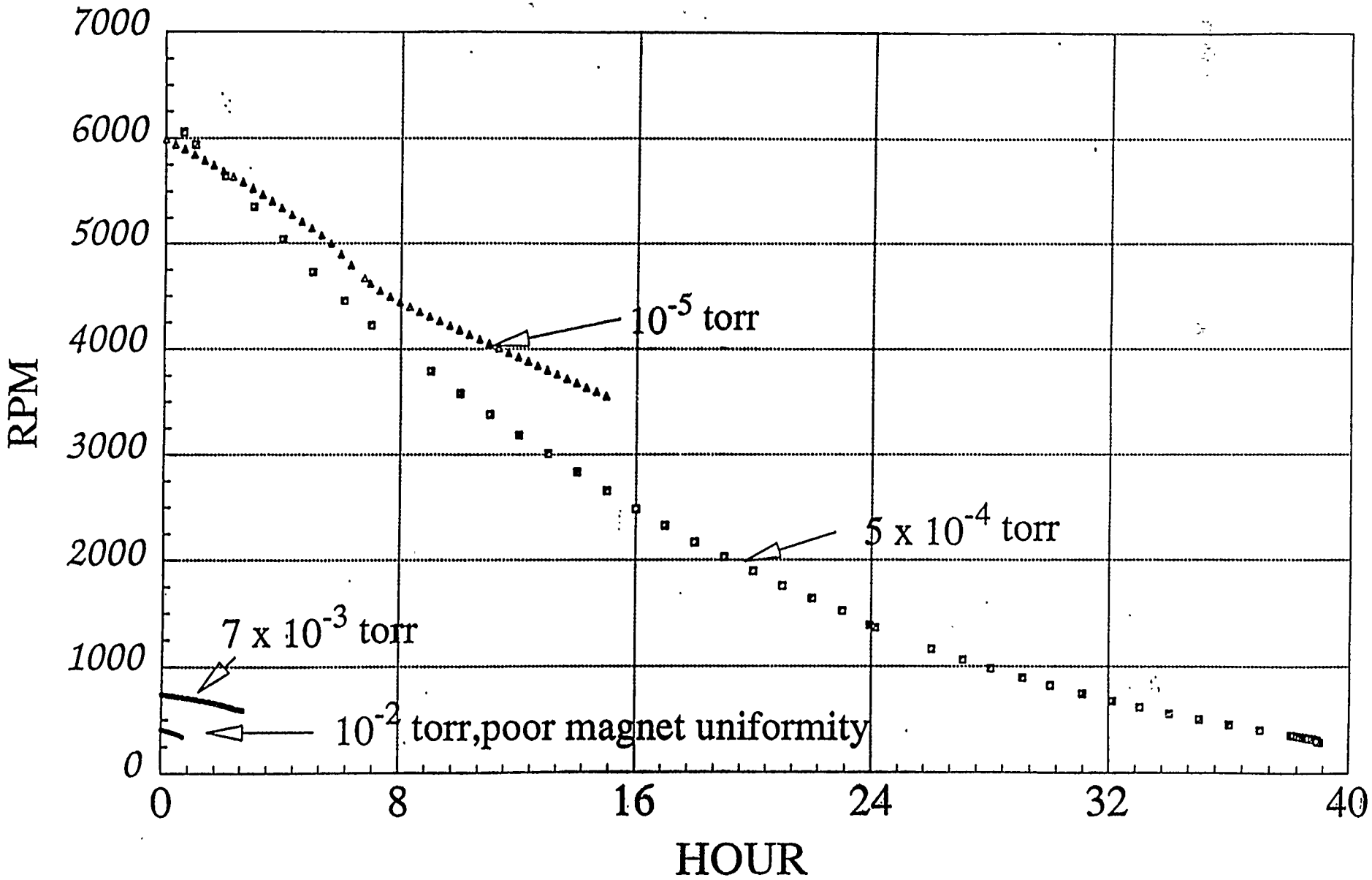

Average Coefficient of Friction:

$$\bar{f}_c = \frac{3\pi I}{W_L R \Delta t}(f_1 - f_2)$$

Average Frictional Energy Loss Per Hour:

$$\overline{E}_{loss} = \frac{1}{\Delta t}\left[1 - \left(\frac{f_2}{f_1}\right)^2\right]$$

I = Moment of Inertia ($kg.m^2$)
W_L = Load (N)
R = Radius of Flywheel Bottom Surface(m)
Δt = Time interval(*second or hour)*
f_1 = Initial Rotating Frequency (Hz)
f_2 = Final Rotating Frequency (Hz)

Rotor Spin-down Tests Indicate: (vacuum = 10^{-5} torr)

$$\bar{f}_c = 0.000195$$

$$\overline{E}_{loss} < 2\% \ / \ hour$$

Frictional Energy Loss

$$E_{loss} = E_{mag} + E_{air}$$

- E_{mag}= Eddy Current And Hysteresis Loss In HTS And Conducting Materials, Caused By Axial Asymmetry Of Magnetic Field
- E_{air}= Residual Air Drag

How High the Vacuum Level Should Be To Make Air Drag Trivial To the Loss?

As the vacuum = 10^{-5} torr, air molecule mean free path

$\lambda = 71$ cm >> a pertinent dimension of the flow field, so the rotation is in a free molecule flow.

The power loss (watt) due to the air drag will be: (Dr Liu of Center of EM, UT at Austin)

$$P_{cy} = 3.665 \times 10^{-8}\, p\, (M/T)^{0.5}\, L\, \omega^2\, r^3$$

$$P_{di} = 1.832 \times 10^{-8}\, p\, (M/T)^{0.5}\, \omega^2\, r^4$$

cy: rotor's cylindrical surfaces

di: rotor's disk surfaces

At the speed of 6,000 RPM, the loss should be:

$$P_{theory} = 0.002\ W$$

If the air drag is the only loss, the flywheel spin-down should last about 145 days!

Power Loss Of Air Drag Predicted By Theory And Average Total Loss Measured From Experiments

	10^{-5} torr	$5x10^{-4}$ torr	ΔP
P_{theory}	0.0016 W (6000 rpm)	0.08 W (6000 rpm)	0.078 W
P_{measur}	0.285 W (average)	0.356 W (average)	0.071 W

We found:

- $P_{measur} >> P_{theory}$
- ΔP_{measur} agrees with ΔP_{theory}
- Air drag is a minor factor in the loss as vacuum level is higher than 10^{-4} torr

We Believe That The Eddy Current And Hysteresis Effects Are The Dominant Factor To The Friction Loss

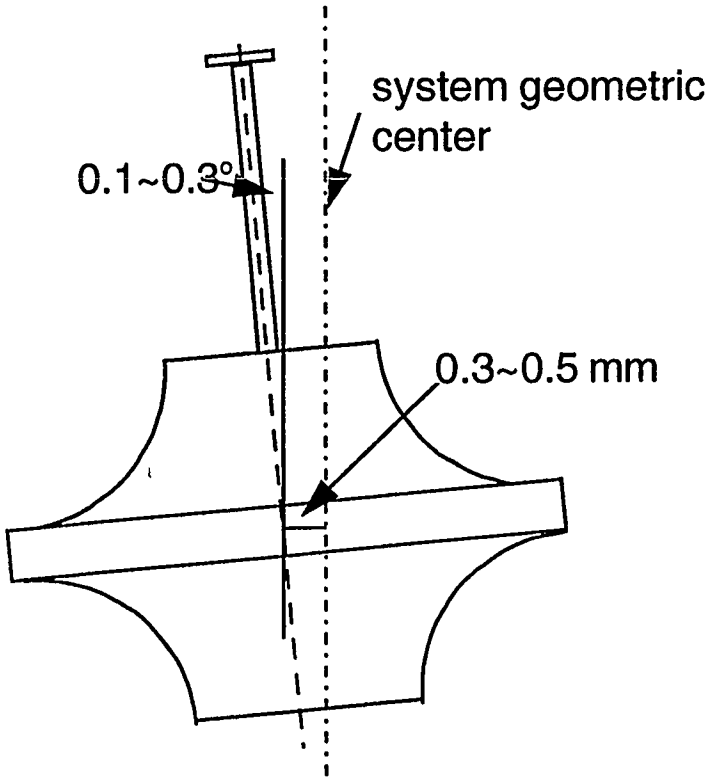

The Deviation Of The Levitated Rotor From The System Geometric Center, Detected By The Sensors, Caused By:

- Mass Eccentricity
- Mis-alignment Of The Magnets
- Poor Magnet Uniformity

Axis asymmetry: mis-alignment of the magnets, unbalanced rotor

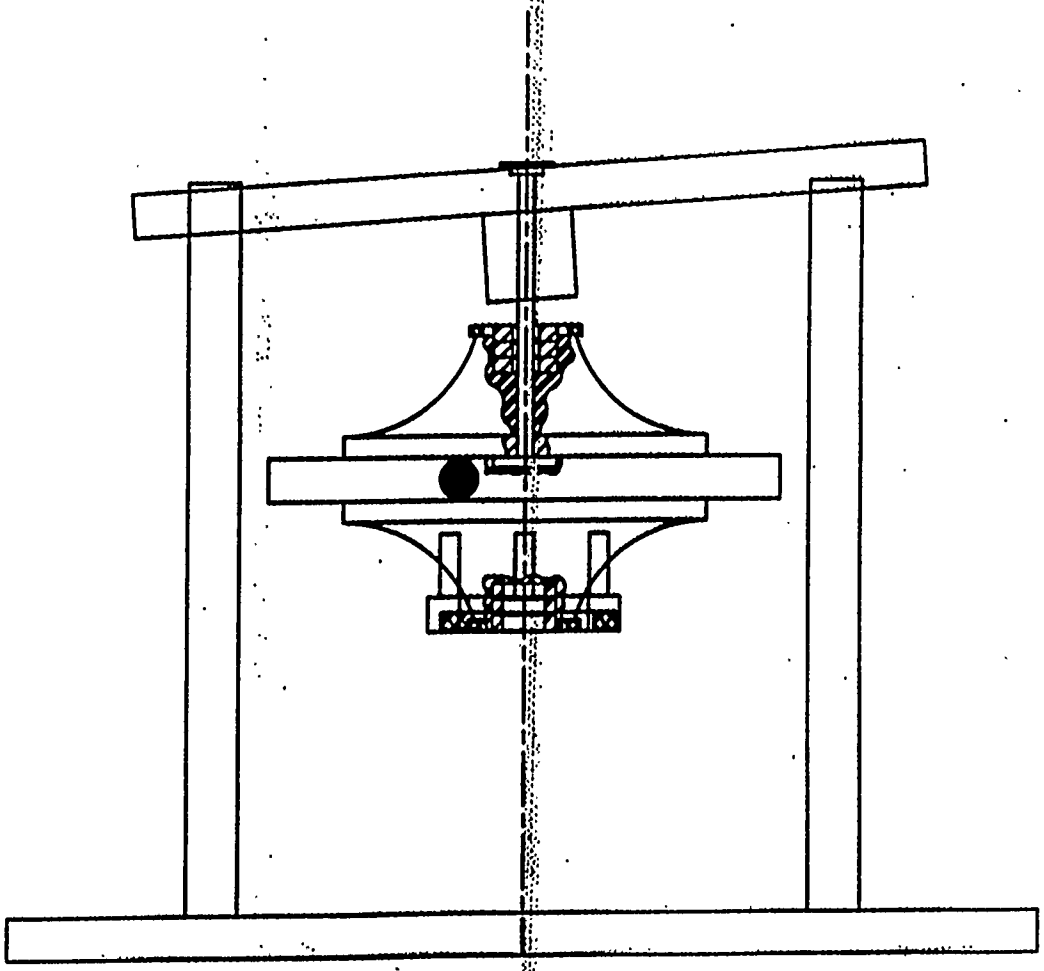

file: mis-alig.dwg

Rotor-Hybrid Superconducting Magnetic Bearing Dynamic Model

The First Approximation: Free-Motion Of Single-mass, Rigid Body Supported By Flexible Springs

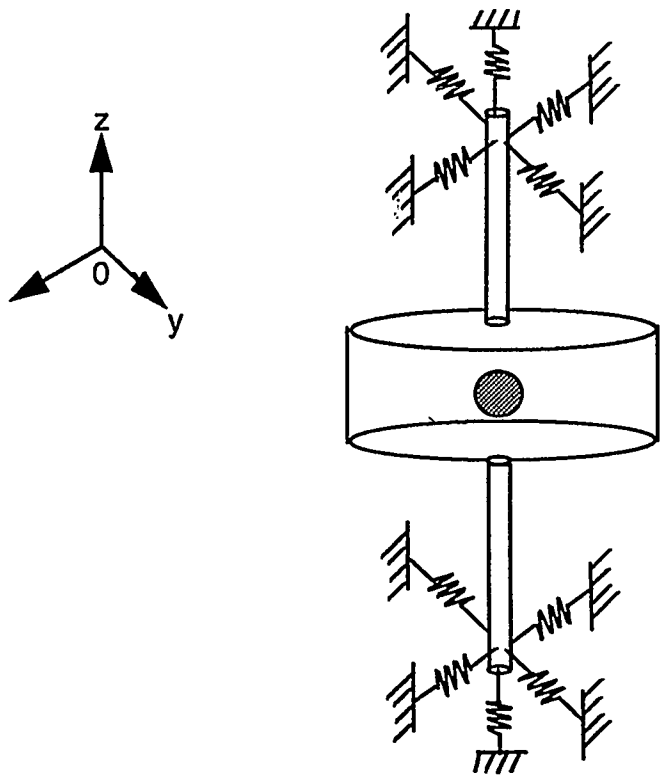

Dynamics Modeling & Measurements of FES Prototype

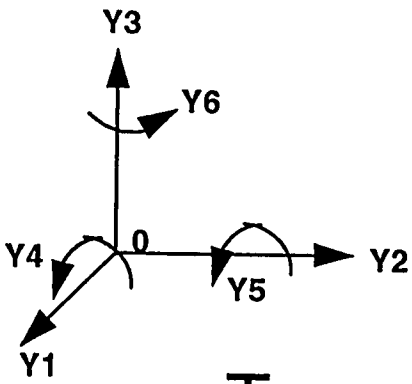

$$[M]\frac{d^2}{dt^2}\{Y\}+[C]\frac{d}{dt}\{Y\}=\{F(Y)\}$$

Temperature = Constant

{Y}: Translational & Rotational Displacements

[M]: Mass And Moment Of Inertia

[C}: System Damping Matrix

t: Time

{F(Y)}: Bearing Forces And Moments

Top View Of Sensor Assembly

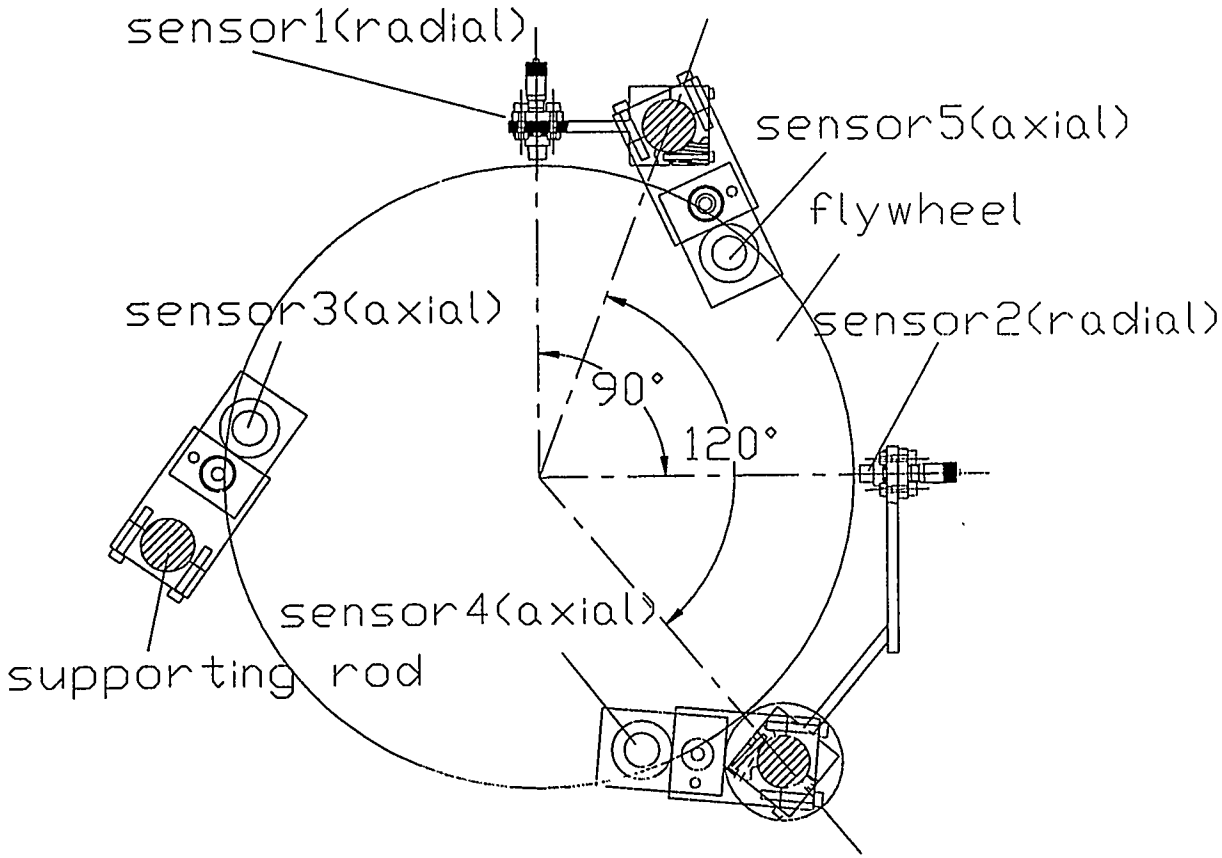

- **Calculation Predicts Only One Critical Speed At 240 rpm***
- **Measurement Shows ω_{cri} Between 240 ~ 300 RPM**
- **A Detailed Analysis Will Be Obtained By Using A Non-contact Clutch And Computerized Data Acquisition Facilities**

* for more detailed analysis, see Genta's "Kinetic Energy Storage", pp 214-227

ISTEC
INTERNATIONAL SUPERCONDUCTIVITY TECHNOLOGY CENTER

MRS
MATERIALS RESEARCH SOCIETY

The Program Committee of the

1995 International Workshop on Superconductivity,

jointly sponsored by the

International Superconductivity Technology Center
and the

Materials Research Society,

presents

W.-K. Chu, K. Ma, Z. Xia, M. Lamb
R. Cooley, Q. Chen, C. McMichael, C. Fowler

with

THE WORKSHOP MATERIAL/DEVICE PERFORMANCE AWARD

in recognition of superior performance in the category of

Bearing Applications

June 21, 1995
Maui, Hawaii

Koichi KITAZAWA

Koichi Kitazawa

Program Chairman (ISTEC)

Kenneth C. GORETTA

K C Goretta

Program Chairman (MRS)

Summary

- Our Hybrid Superconducting Magnetic Bearings Levitate A Flywheel Of *42* lb.
- The Flywheel Currently Can Run Up To *6,000* RPM With Energy Loss <*2%* Per Hour
- We Have Analyzed The Friction Loss and Characterized The Rotor Dynamics

Future Work

- We Will Improve The Performance By Doing Mechanical Modifications Including:
  - * Clutch Mechanism
  - * Cold-stage Design
  - * System Alignment
  - * Rotor Balance And
  - * Computerized System Operation
- We Will Design A *2 kWh* FES Module With Frictional Energy Loss < *0.1%/Hour*

Feasibility Study of the Application of Flywheel Energy Storage at Gaseous Diffusion Plants

Submitted to the ARPA/DOE Flywheel Energy Storage Workshop by:

W. Kelly Dagenhart, Ph.D.
Oak Ridge National Laboratory
Oak Ridge, Tennessee 37831-8088

October 31, 1995

Presentation Overview

- System Studied in Order to Reduce Enrichment Unit Costs
- Paducah Gaseous Diffusion Plant (PGDP) System
- Typical Flywheel System
- System Costs and Trends
- System Economics
- Future Studies

Paducah Gaseous Diffusion Plant Overall System Description

- Large electrical motors constitute most of the load and run 7 days a week and 24 hr./day; total plant load can range up to 2000 MW.
- The flywheel storage units were arbitrarily chosen to have a nominal size of 450 kW/450 kWh delivered, to have integral motor generator/power electronics, and a tip speed of 1200 m/s.
- Multiple flywheels would be used to have a total capacity of 20,000 MWh.

Picture of the Paducah Gaseous Diffusion Plant

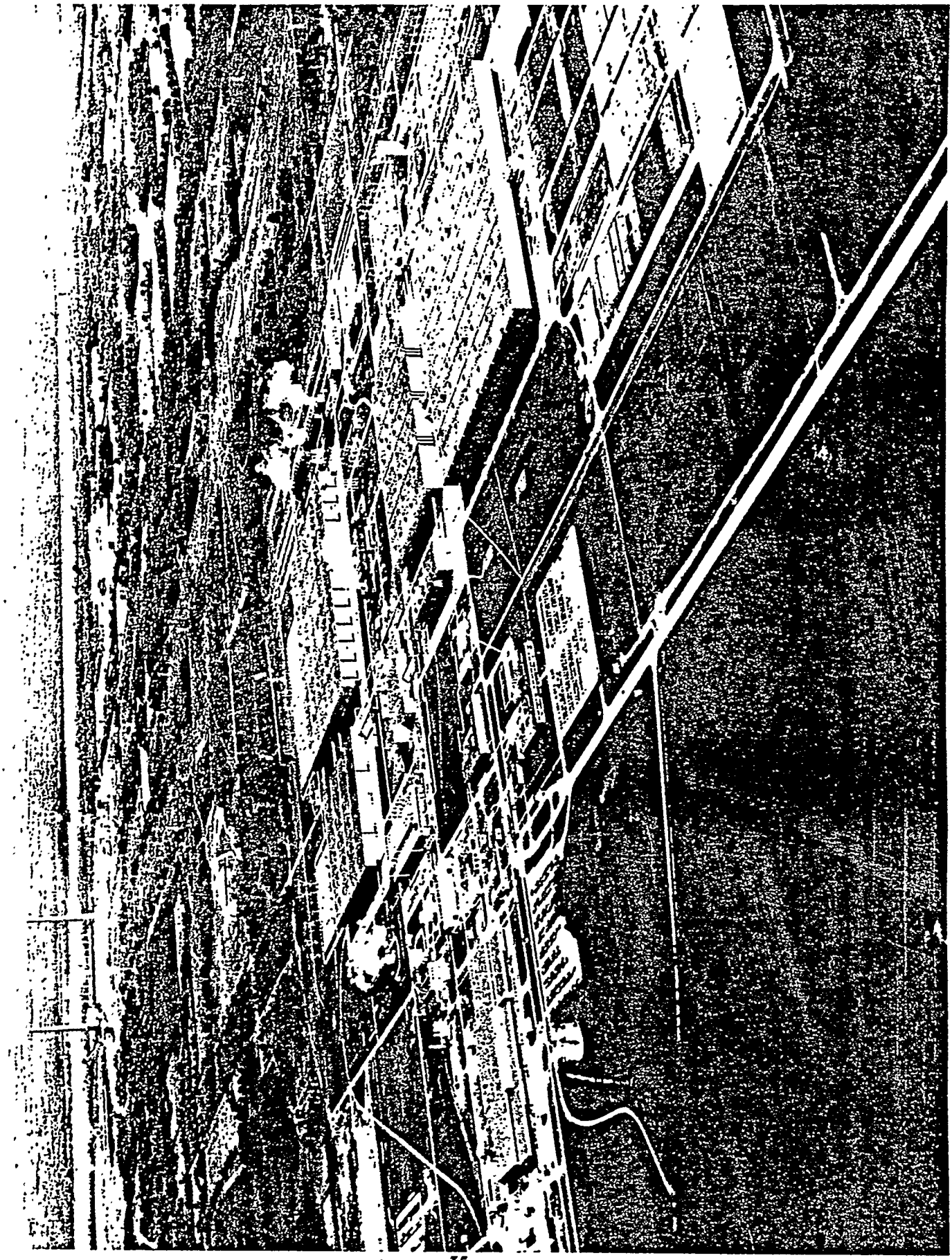

Paducah Gaseous Diffusion Plant Description

- The plant now typically runs at higher capacity during periods when power is cheaper.
- Electrical supply is limited to as little as 500 MW during periods (hot or cold weather) when utility demand is high thus mandating capacity reduction.

ornl

Flywheel Energy Storage Module Concept

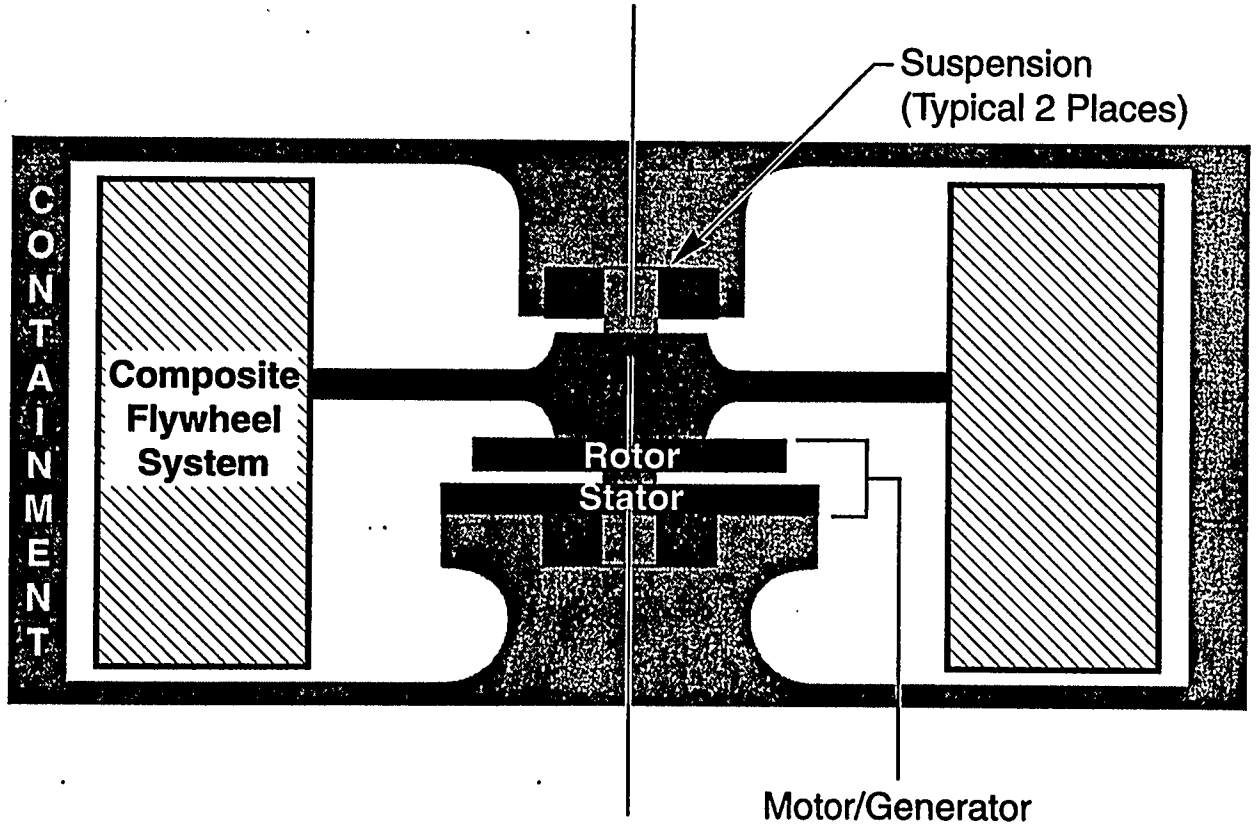

DWG. NO. K/G 93-213R GSS

Flywheel Characteristics

- Flywheel design and size has not been studied to minimize the unit cost of stored energy.
- Carbon fibers appear to be the best rotor material from a cost benefit standpoint. This decision depends on high volume carbon fiber use in the future.

Flywheel Materials/Costs

- The cost of IM6 class carbon fiber has been projected to get as low as $3-5/lb. by the Partnership for a New Generation of Vehicles program, based on large usage.
- The cost of carbon fibers decreases with increasing carbon fiber production volume according to Roger Prescott of Akzo, Fortafil Fibers, Inc and others.

Power Electronics

- Power electronics are necessary to convert the ac grid power into dc and then back into variable frequency ac to power the motor to spin up the rotor.
- Power electronics are also necessary when extracting stored mechanical energy from the rotor back into ac, synchronous with the power grid.

Power Electronics Costs

- Power electronics cost is estimated to come down from the 1994 cost of $200/kW to $20/kW in the year 2004 based on their use in the auto industry.
- If large-scale use occurs in both auto and utility areas then the costs can be expected to come down even further.

Flywheel Motor / Generator

- Cost of the motor/generator for the flywheel is estimated to come down from $20/kW in 1994 to $4/kW in the year 2004 by the Partnership for a New Generation of Vehicles.
- Increased use of these types of motor / generators by utilities will bring the price down further and sooner.

Table 1. Flywheel system costs using a flywheel with 450kw and 450kwh available capacity (600kwh stored)

FLYWHEEL COST ELEMENT		ESTIMATED COST
Flywheel rotor ($3/lb graphite composite)	=	$28,000
Motor/Generator ($4/kW)	=	1,800
Power Electronics ($20/kW; Switched among 10 flywheels)	=	900
Magnetic Bearings & Electronics	=	2,000
Miscellaneous Structure	=	2,000
Assembly	=	2,000
Total	=	$36,700
Approximate Energy Storage Cost is $82/kWh Approximate Power Cost is $82/kW		

Table 2. Plant cost elements and total

PLANT COST ELEMENT		ESTIMATED COST
20,000 MWh worth of 450kW/450kWh flywheel units @$82/kWh	=	$1,640,000,000
Plant Building(s) (Estimated 10% of equipment cost)	=	164,000,000
Power switchgear (Estimated 5% of equipment cost)	=	82,000,000
Plant Design (Estimated at 10% of equipment cost)	=	164,000,000
Flywheel R&D Program	=	50,000,000
Project Management (Assumed to be 5% of equipment cost)	=	82,000,000
Total Estimated Plant Cost or $109/kWh of Capacity	=	$2,182,000,000

Possible Revenue Enhancements

- Project the power cost differential between low and high cost periods for the future when it is to be used. This differential is predicted to increase significantly.
- Investigate if any revenue enhancement can be obtained from the power quality improvements and increased spinning reserve that this system would add.

Possible Revenue Enhancements - Cont.

- Plant capacity is effectively greatly enhanced since night power is always available and this would enable 100% plant capacity utilization.
- The power utility should give some credit for the large amount of load shifting which this plant represents.

Further Cost Reductions

- Increased use of graphite in bridges, flywheel load shifting, flywheel power quality improvements, and uninterruptable power units should further reduce the price of graphite fibers and thus lower the cost of flywheel systems even further.

Pay Back Period

- The power savings per year is calculated to be (based on a cost differential of $15/MWh between day and night power):
  - 20,000MWh x 365 days/yr. x $15MWh = **$109.5 M saved/yr.**
- Assumed operating and maintenance cost per year = **$19.5M/yr.**
- 10% flywheel energy loss/yr. = **$7M/yr.**

Pay Back Period - Cont.

- Net Power Savings = **$83M/yr.**
- Assuming a 14% discount rate on the money borrowed
- Project cost required for a five year pay back period would be **$285M**

Pay Back Period Reduction Methods

- Investigate all of the possible revenue enhancements previously mentioned
- Evaluate the cost reductions possible because of increased usage of graphite fibers in other industries.

Summary

- The results of this one man-month study showed that the flywheel storage load shifting was not feasible for the PGDP mainly because of their cheap power rates.
- Further study and utilization of the full economic benefits of this plant may make this project feasible. This will depend partly on teaming with the utilities.

Experimental Test Facility for Flywheel Energy Storage Utilizing Superconducting Magnetic Bearings

Presenter:
Kenneth Uherka
Argonne National Laboratory

Collaborators:

Argonne National Laboratory

John Hull

Thomas Mulcahy

Robert Erck

Commonwealth Research Corporation

Robert Abboud

John Juna

FLYWHEEL ENERGY STORAGE WORKSHOP, OAK RIDGE, TN — OCT. 31, 1995

INTRODUCTION AND BACKGROUND

High efficiency flywheel energy storage (FES) is desired by electric utilities, who are forced to cycle base-load power plants by as much as 30 % over a 12-h period.

Successful FES technology would also reduce the need for construction of new transmission lines.

The use of high-temperature superconductors (HTSs) in passive magnetic bearings has led to the realization that FES systems with idle losses < 0.1 %/h and diurnal storage efficiencies > 90 % can be achieved.

Future high-efficiency FES systems for utility applications must incorporate HTS bearings and ultra high-speed flywheels, with inertial rims fabricated from high-strength composite materials, combined with new-technology motor/generators.

Loss mechanisms for experimental HTS magnetic bearings have been investigated in a vacuum chamber test apparatus at Argonne National Laboratory, and coefficients of friction several orders of magnitude less than those for conventional bearings are routinely measured.

Energy Storage Applications

- Power Quality Control
- Uninterruptable Power Supplies
- Electric Vehicles &/or Charging Stations
- Renewable Applications
  - Solar
  - Wind
- Long Haul Transportation
  - Trucks
  - Railroads
- Diurnal Energy Strorage
  - Industry
  - Electric Utilities

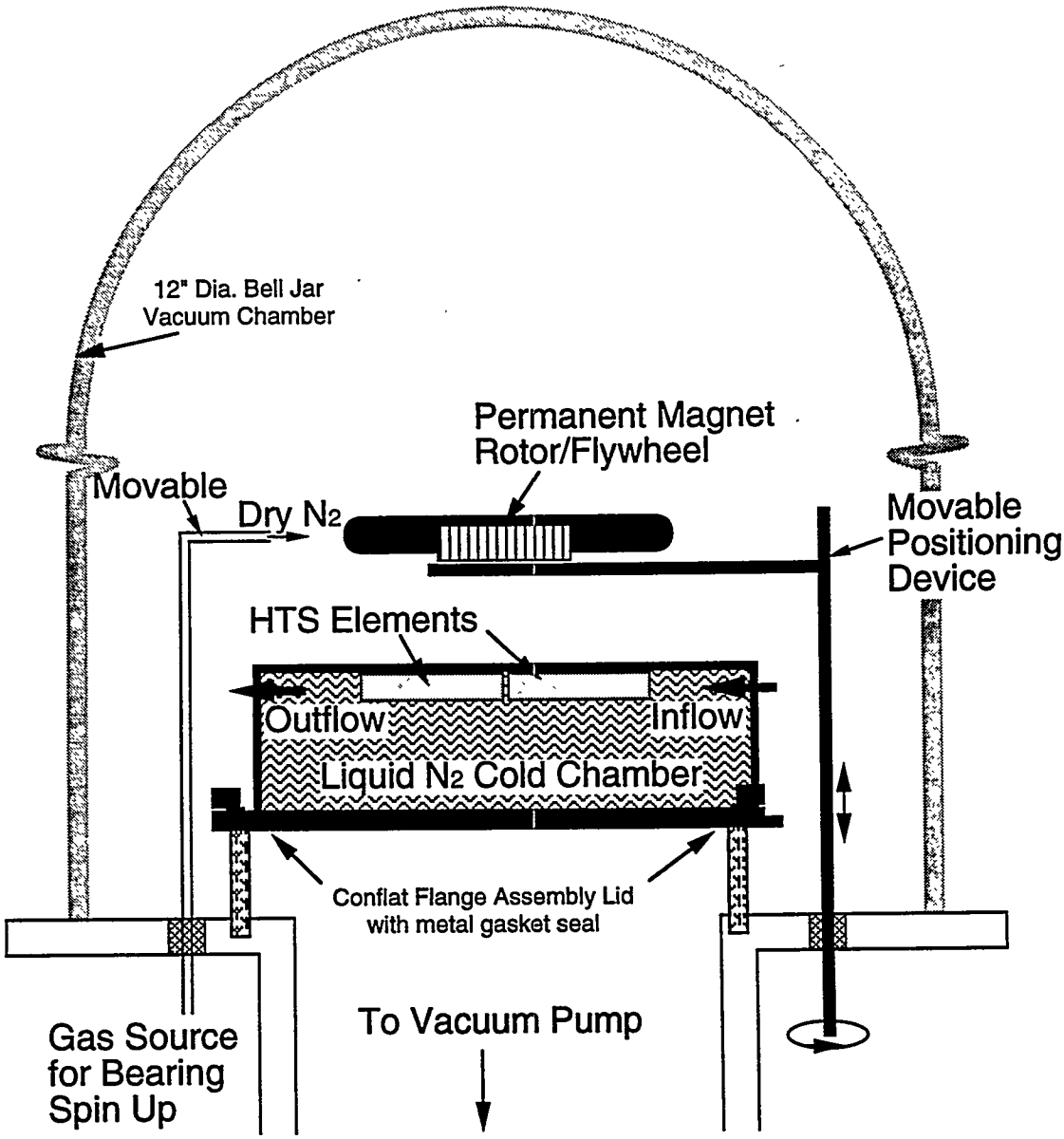

Schematic representation of bell-jar vacuum chamber used for HTS bearing spin-down experiments.

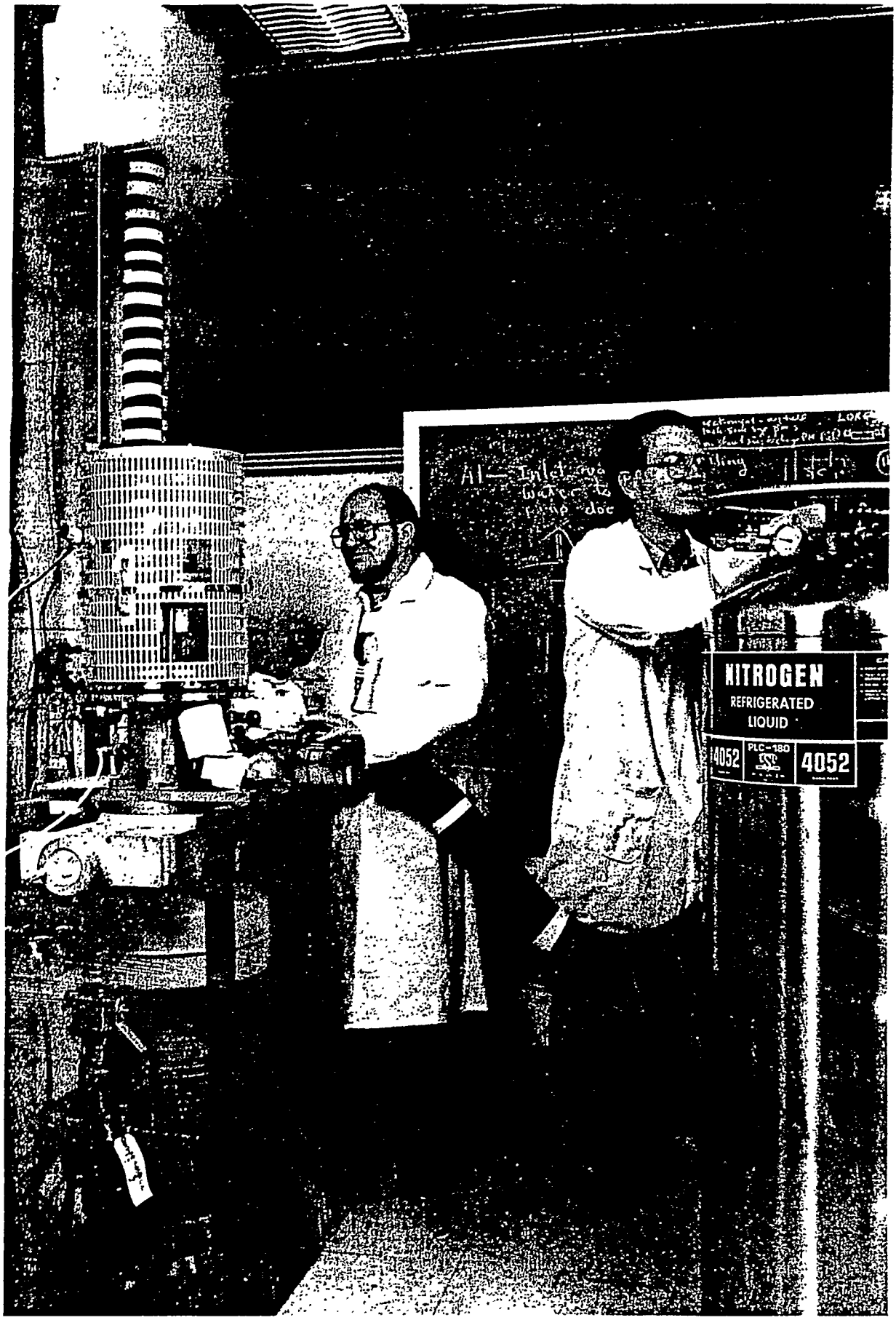
NITROGEN
REFRIGERATED
LIQUID
4052
PLC-180
4052

COEFFICIENT OF FRICTION

μ = coefficient of friction = F_D / F_L

$F_L = M\,g$, where M = weight of levitated rotor

F_D = drag force calculated from

$$I\,\alpha = \text{drag torque} = -F_D\,R_D$$

where R_D = mean radius at which F_D acts

I = rotor moment of inertia = $M\,R_\gamma^2$

R_γ = radius of gyration for the rotor

α = angular acceleration = $2\pi\,(df/dt)$

f = frequency of rotation

Combining the above yields

$$\mu = -\left[2\pi\,R_\gamma^2\,(df/dt)\right] / (g\,R_D)$$

All terms can be measured or calculated except for R_D

df/dt – measured from rotor spin-down experiments in a vacuum chamber test facility

For definiteness, R_D can be taken as the outer radius of the bearing part of the rotor.

COEFFICIENT OF FRICTION

$$\mu = F_D/F_L$$

where F_D is the drag force and F_L is the lift force.

Technology	typical μ
conventional bearings	10^{-3}
magnetic bearings (includes electromagnet parasitics)	10^{-4}
superconducting bearing: (without cryocooler parasitics)	
(previous - other) (published)	1 to 10^{-4}
(previous - ANL/UTRC) (~ 1-10 gm)	~3×10^{-6}
(present - ANL/CRC) (~ 300-400 gm)	~3×10^{-7}
(present - ANL/CRC) (~ 2-10 kg)	in progress

IDLE LOSSES FOR FLYWHEEL ENERGY STORAGE

Objective is to determine μ required to achieve a low flywheel energy storage (FES) idle loss of 0.1 % per hour

For simplicity, assume that all of the flywheel rotor mass is located in a rim at radius R, then $R_D = R_\gamma = R$

E = stored energy = $\frac{1}{2} M V^2$

where $V = 2\pi f R$ = rotor rim speed

Combining P = power loss = $-dE/dt = F_D V$ with the above:

$-(dE/dt) / E$ = relative energy loss per unit time

$$= F_D V / (\tfrac{1}{2} M V^2) = 2 F_D / (M V)$$

Since μ = coef. of friction = $F_D / F_L = F_D / (M g)$, the previous can be combined to give:

$$\mu = -[(dE/dt) / E] V / (2g)$$

$V \geq 1000$ m/s for high FES energy densities

Since $(dE/dt) / E \leq 0.1$ % / hour is desired idle loss, then $\mu \leq 1.4 \times 10^{-5}$ is the calculated value required.

However, refrigeration requirements for maintaining HTS stator elements at cryogenic temperatures must be accounted for. Approximately 14 units of mechanical energy are needed to remove 1 unit of heat at 77 K. Thus the value for μ calculated above must be reduced by a factor of 14.

➡ $\mu \leq 1.0 \times 10^{-6}$ required for idle losses ≤ 0.1 % / h

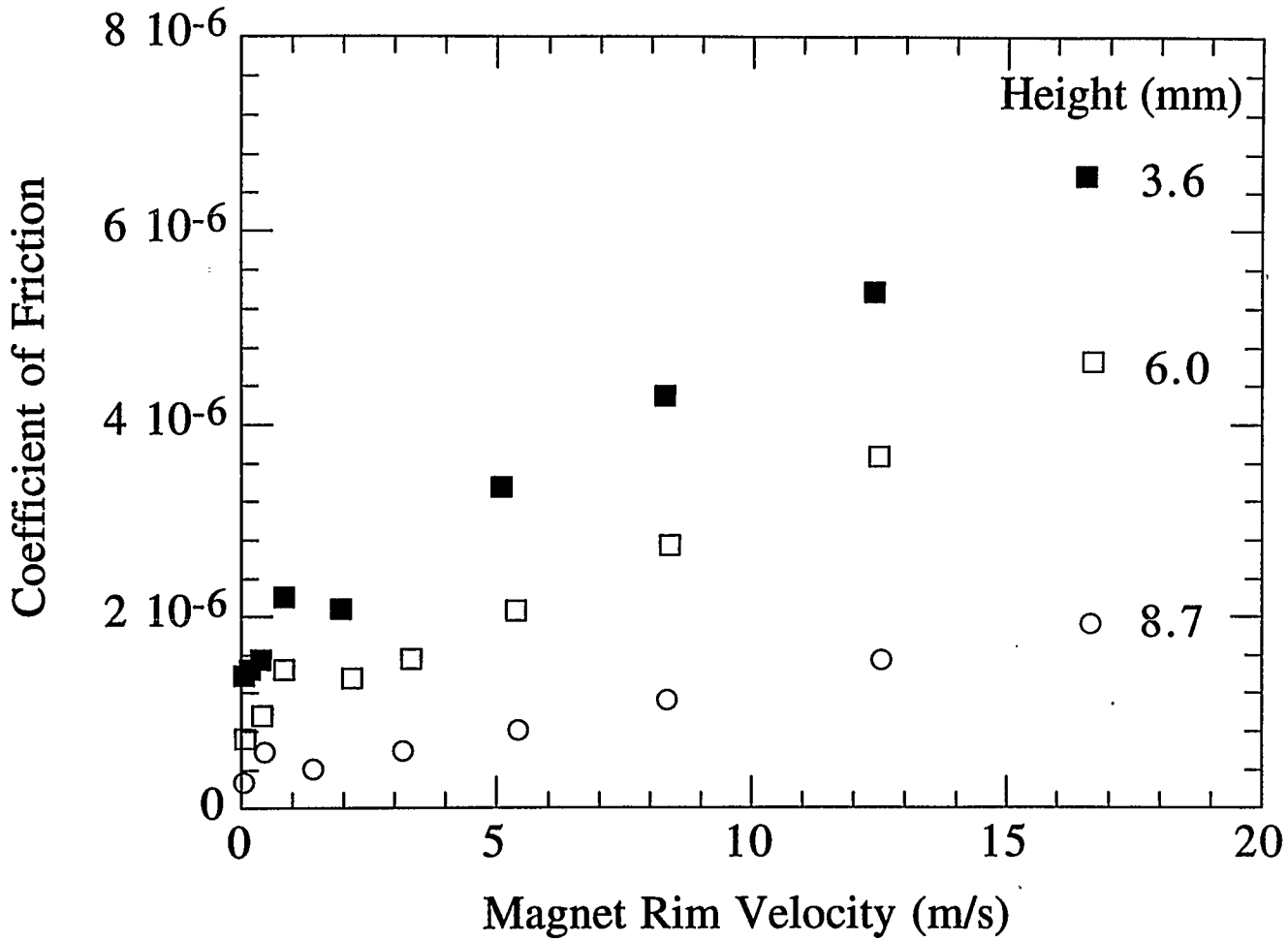

Coefficient of friction μ as a function of magnet rim velocity with an array of 10 HTSs. Height is referenced to top of thin fiber-glass composite top plate of stainless-steel liquid-nitrogen chamber.

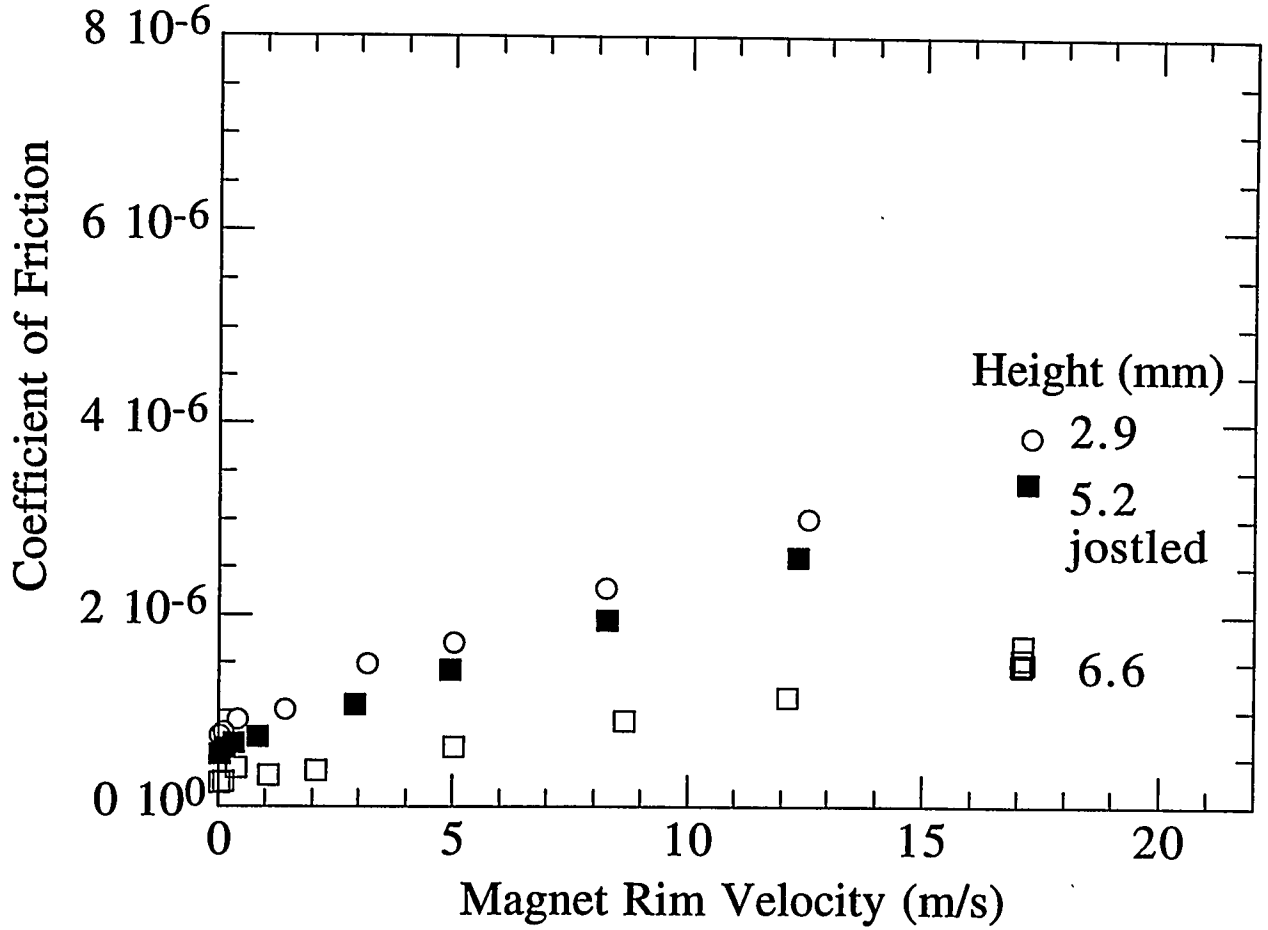

Coefficient of friction μ as a function of magnet rim velocity with an array of 10 HTSs. Height is referenced to top of thin fiber-glass composite top plate of fiber-glass liquid nitrogen chamber.

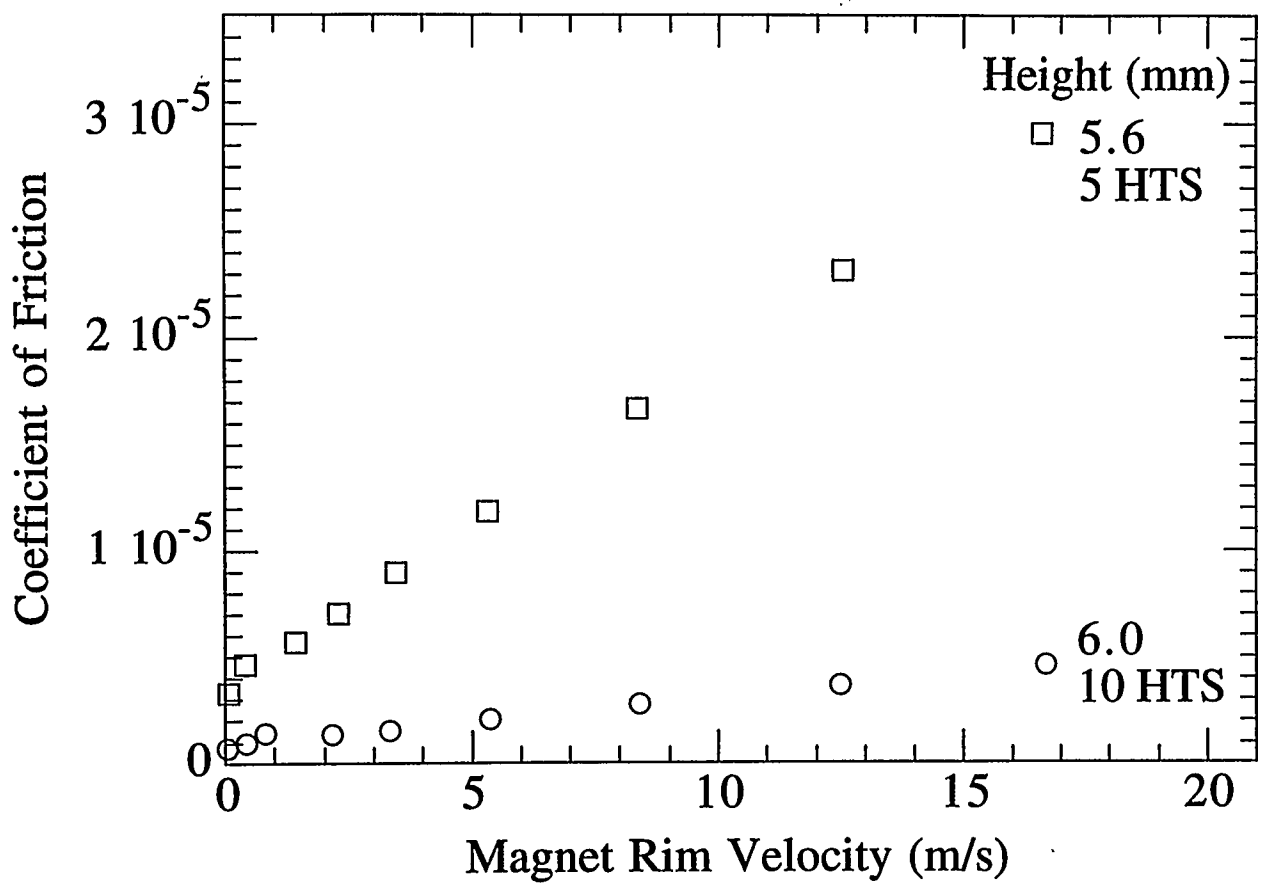

Coefficient of friction μ as a function of magnet rim velocity with number of HTS elements as a parameter. Height is referenced to top of liquid-nitrogen chamber.

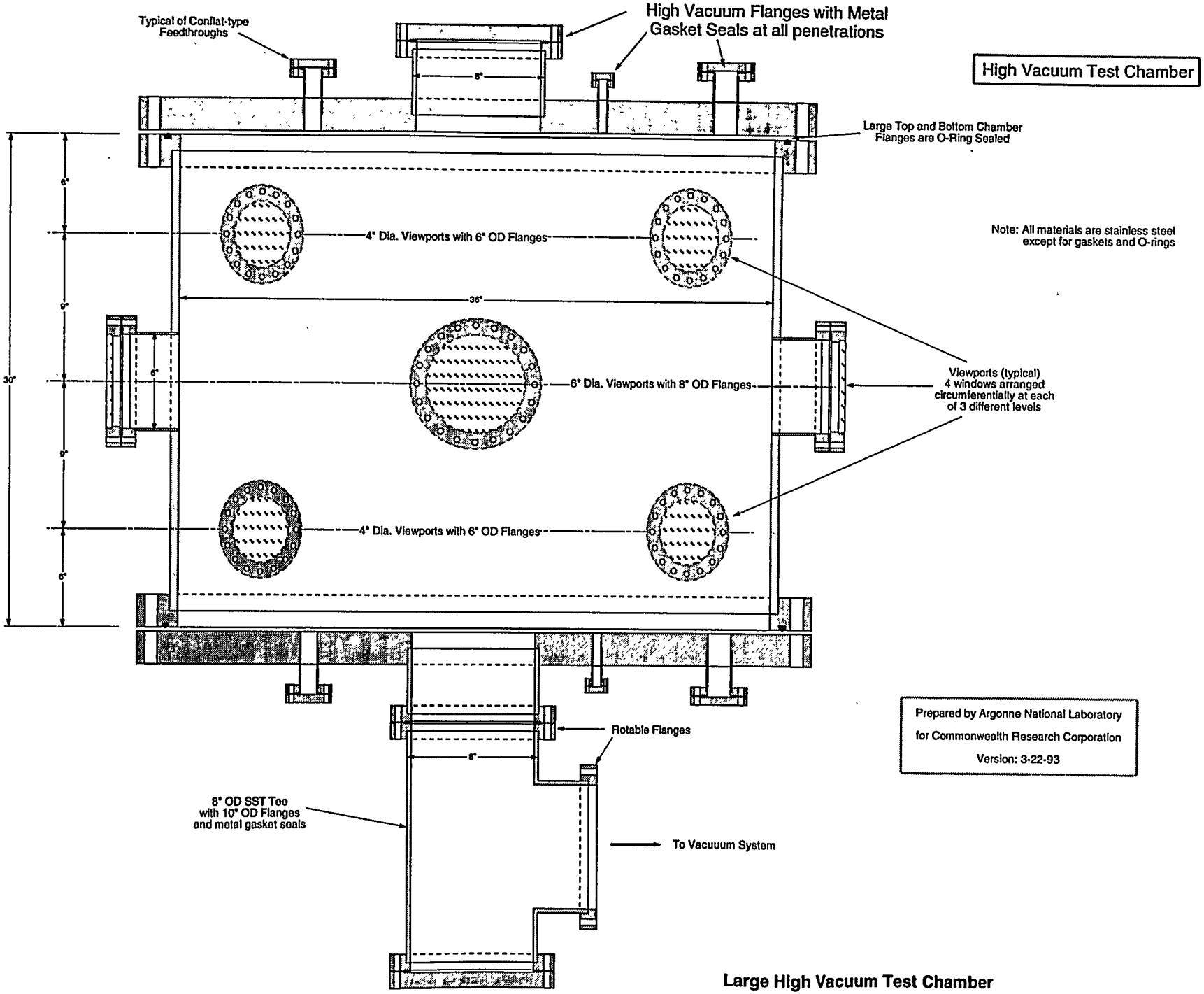

Large High Vacuum Test Chamber

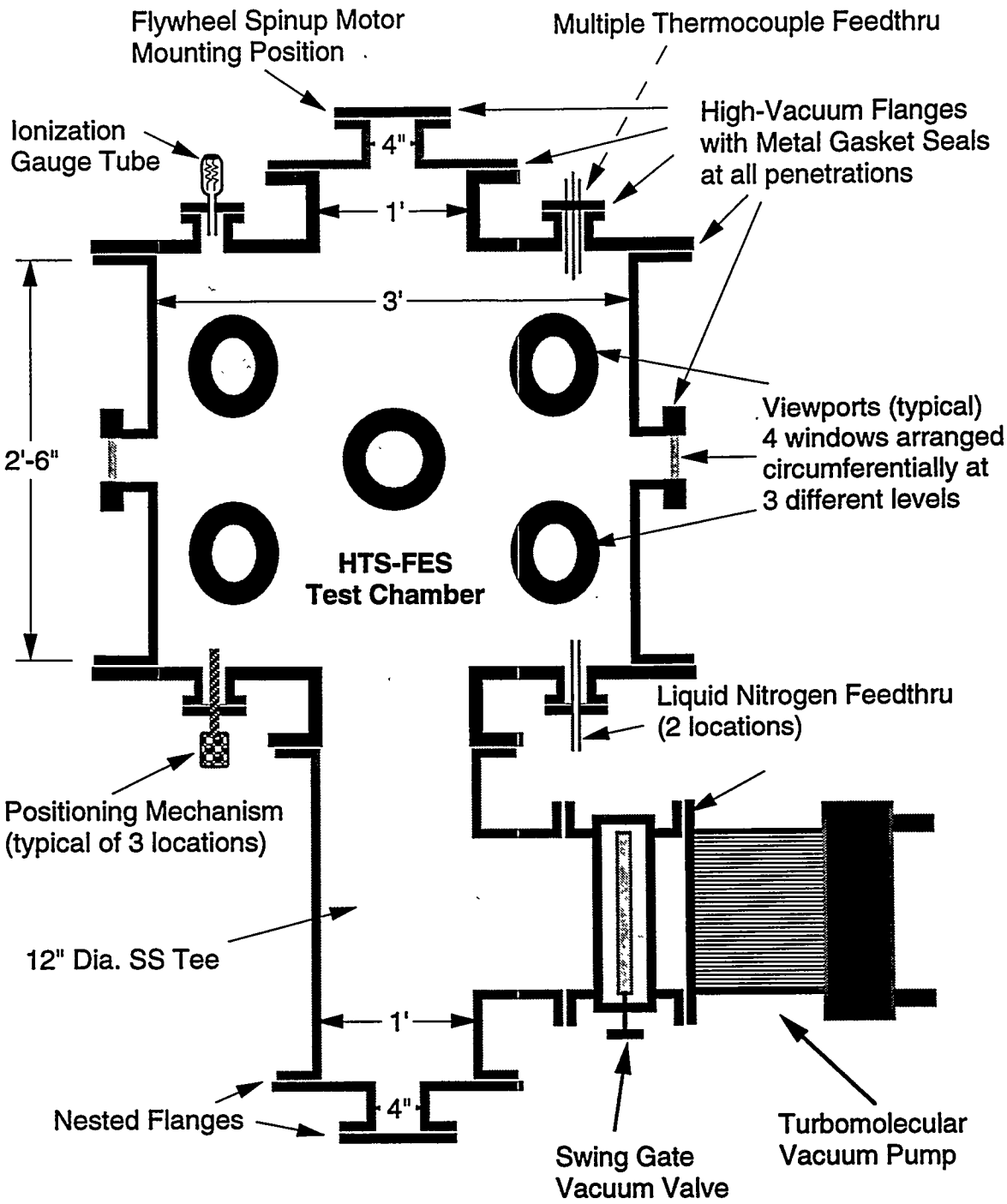

Design Layout of FES Test Apparatus

4-26-93

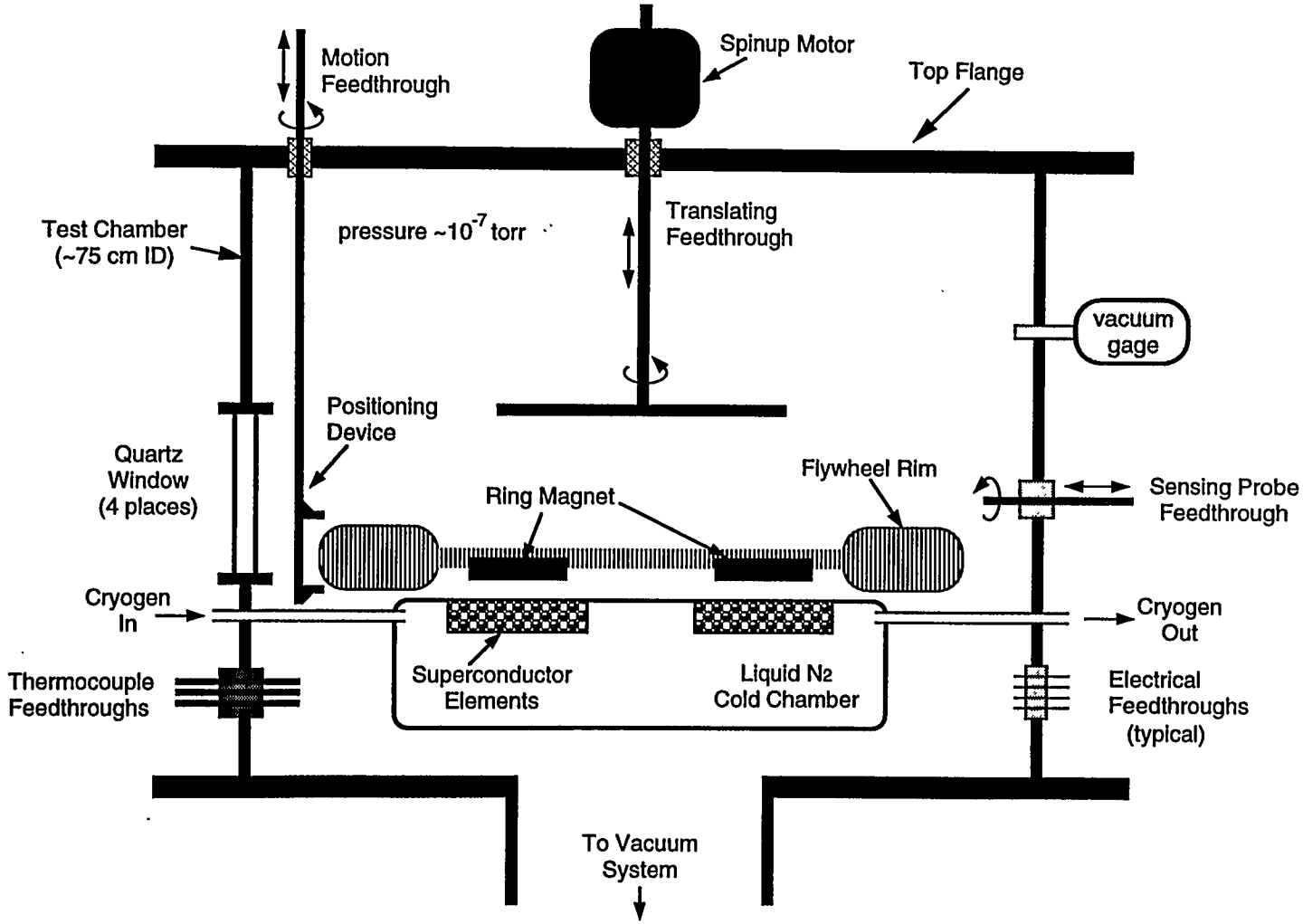

Schematic of Flywheel Energy Storage (FES) Test Apparatus (FTA)

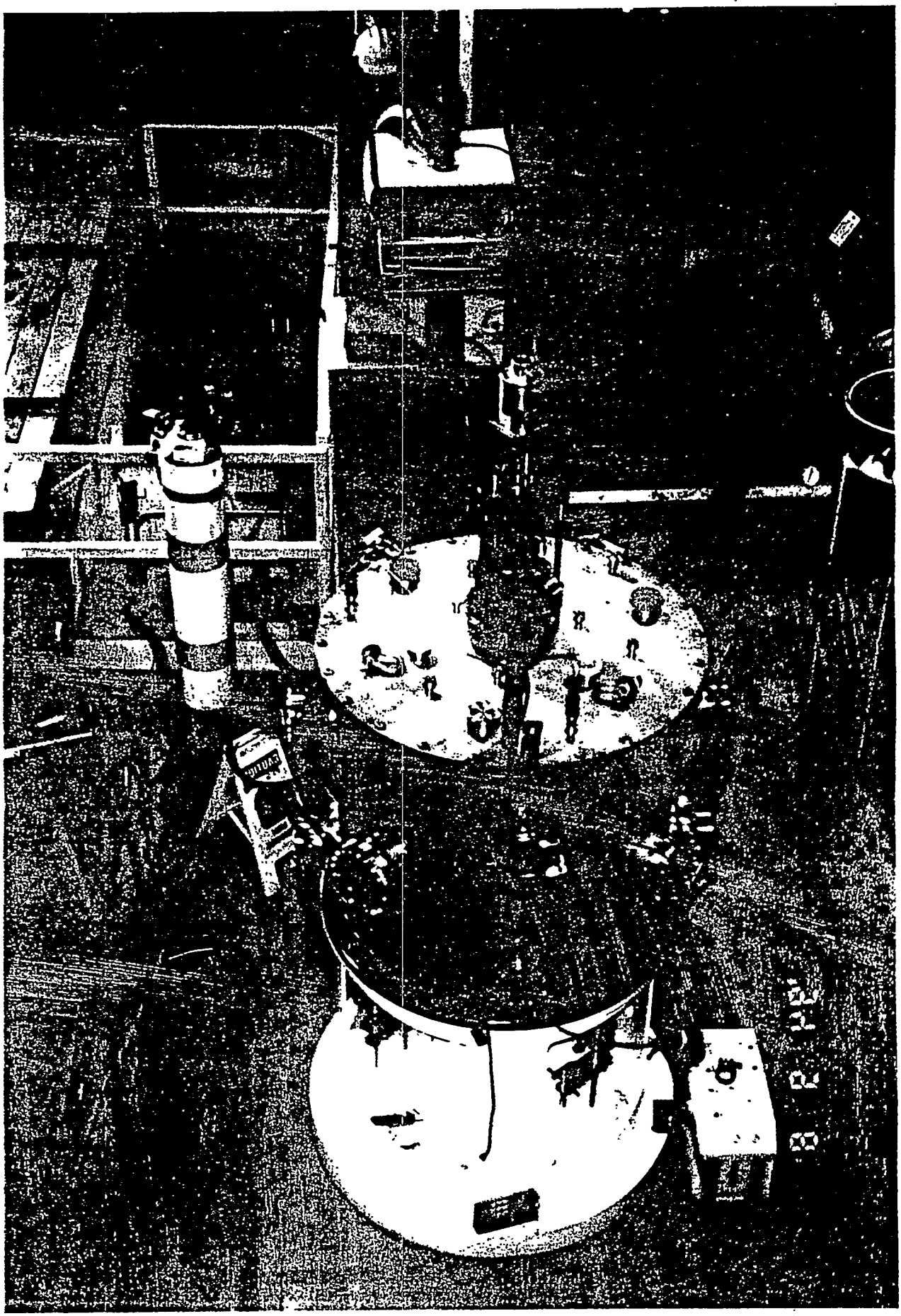

Photograph of J16FTA

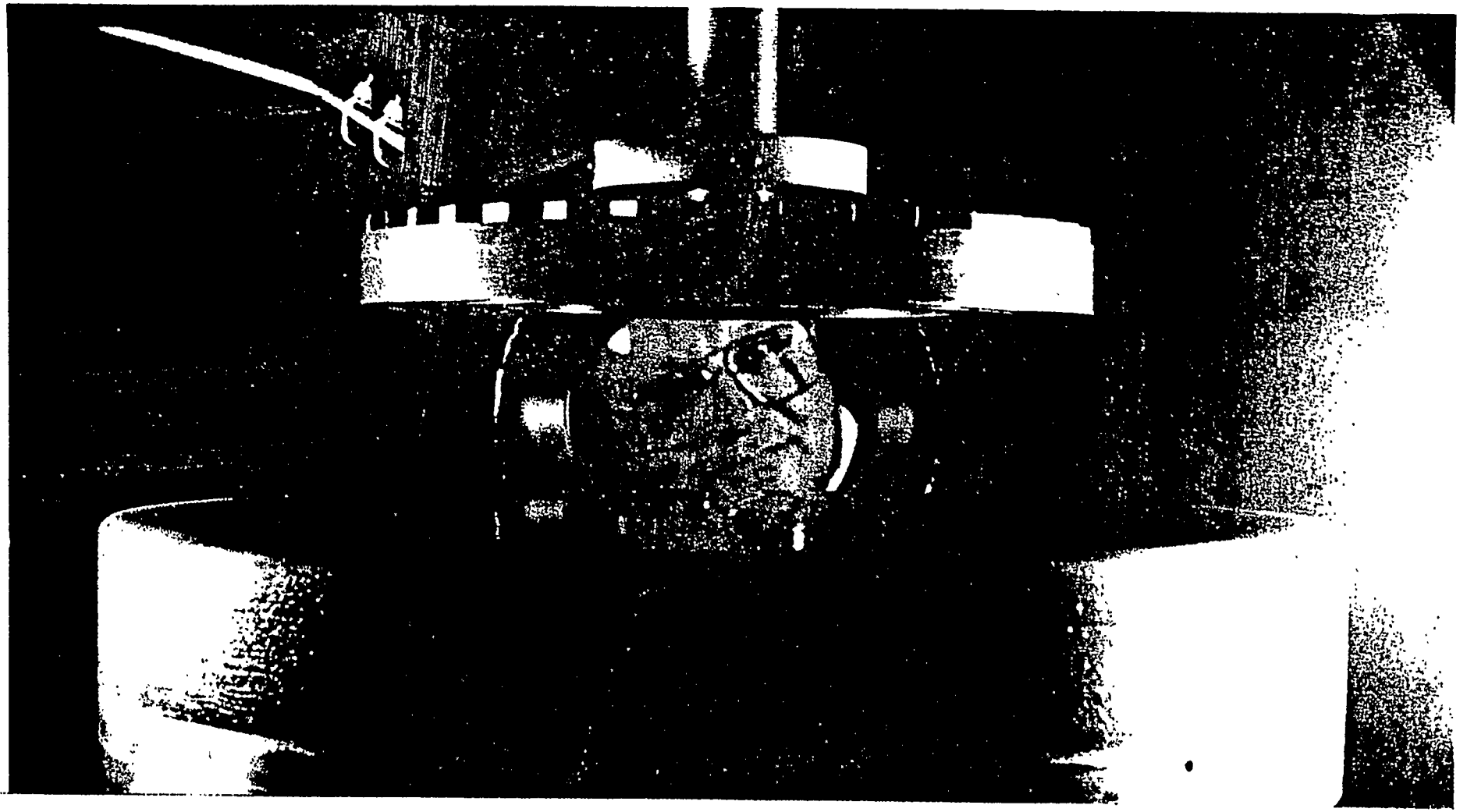

ROTOR A Magnet and HTS Cryochamber in FTA

FTA Safety Considerations

- FES Test Apparatus installed in Reinforced Concrete Safety Pit (8' x 10' by 10' deep).
- Three steel-reinforced concrete blocks, each 3' x 12' x 1.5' high and weighs 13,000 lbs, cover the top of the pit during critical tests.
- Special 2.5" tall collar framework of ballistic fiberboard surrounds the FTA pit perimeter to capture fragments that might escape if one edge of a concrete block is raised.
- A 20' x 21' ballistic nylon blanket is spread over the three 13,000 lb concrete blocks and the ballistic collar to capture fragements that might penetrate through cracks.

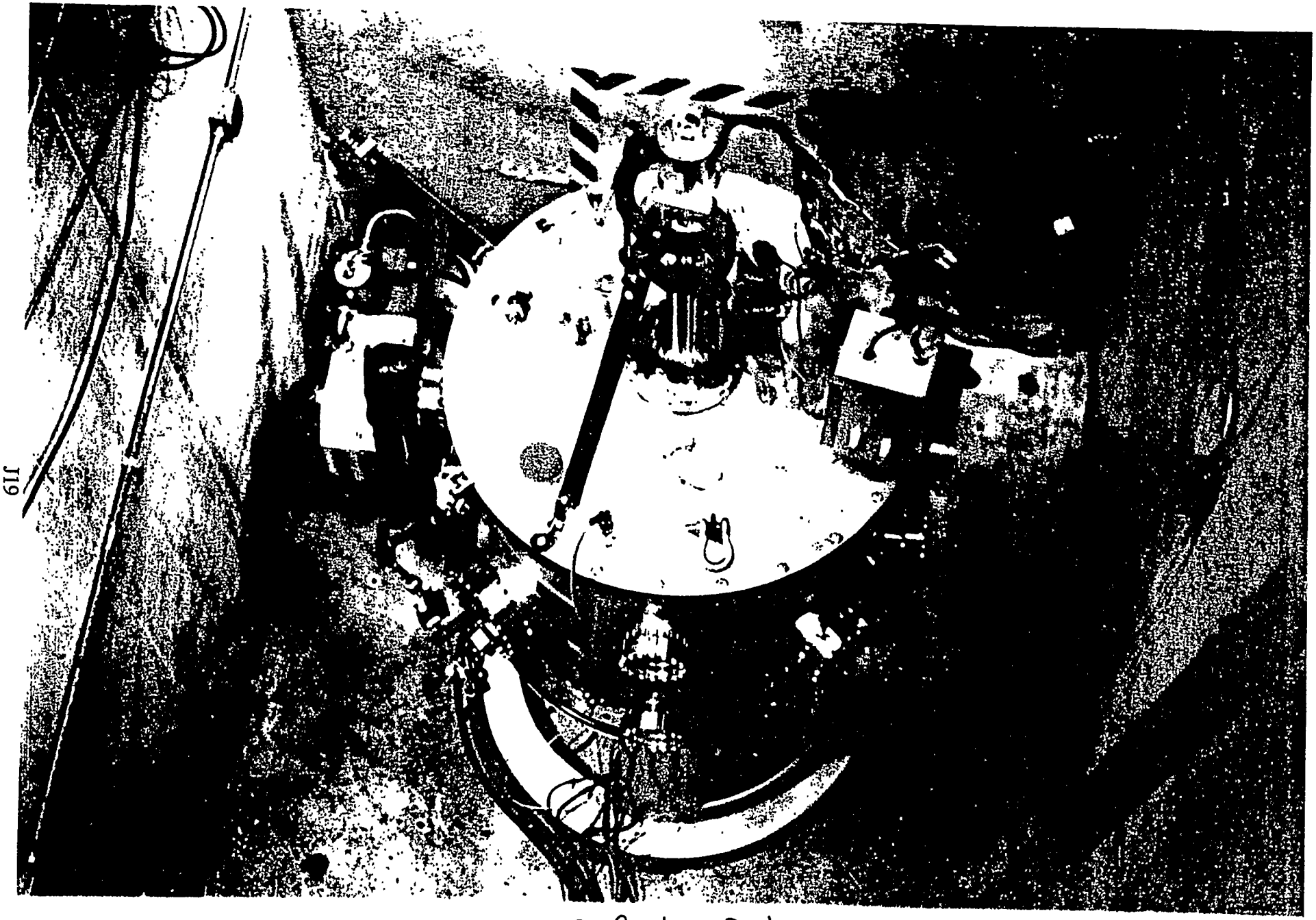

FTA in Safety Pit

CONCLUSIONS

A bell-jar vacuum-chamber experimental apparatus was constructed and successfully used to investigate HTS magnetic bearing spin-down characteristics.

A record low-speed coefficient of friction of $\mu = 3 \times 10^{-7}$ was measured in a bearing consisting of an 89-mm diameter ring permanent magnet (PM) stably levitated over an array of HTS cylinders.

Low values of $\mu \leq 1.0 \times 10^{-6}$ for HTS bearings may be the enabling technology for high-efficiency FES applications that require flywheel idle losses ≤ 0.1 % / h.

Hysteresis loss in the HTS stator elements are believed to be responsible for the small bearing losses at low speeds.

At higher speeds, HTS bearing spin-down experiments indicate that the important loss mechanism is the consequence of eddy currents induced in the rotating PM due to the discrete nature of the HTS array.

A larger FES test apparatus (FTA) has been designed and constructed on the basis of the encouraging results from the bell-jar apparatus for small HTS bearings. The FTA vacuum chamber is a cylindrical stainless steel vessel with ID = 914 mm and height = 864 mm, and is being used to conduct FES/HTS bearing scale-up experiments.

FLYWHEEL ENERGY STORAGE SYSTEM DEVELOPMENT AT THE UNIVERSITY OF TEXAS CENTER FOR ELECTROMECHANICS

presented by
Joe Beno and John Price

Center for Electromechanics
The University of Texas at Austin

(512) 471-4496

EXPERIMENTAL HIGHBAY AND OFFICE FACILITIES

AT THE CENTER FOR ELECTROMECHANICS

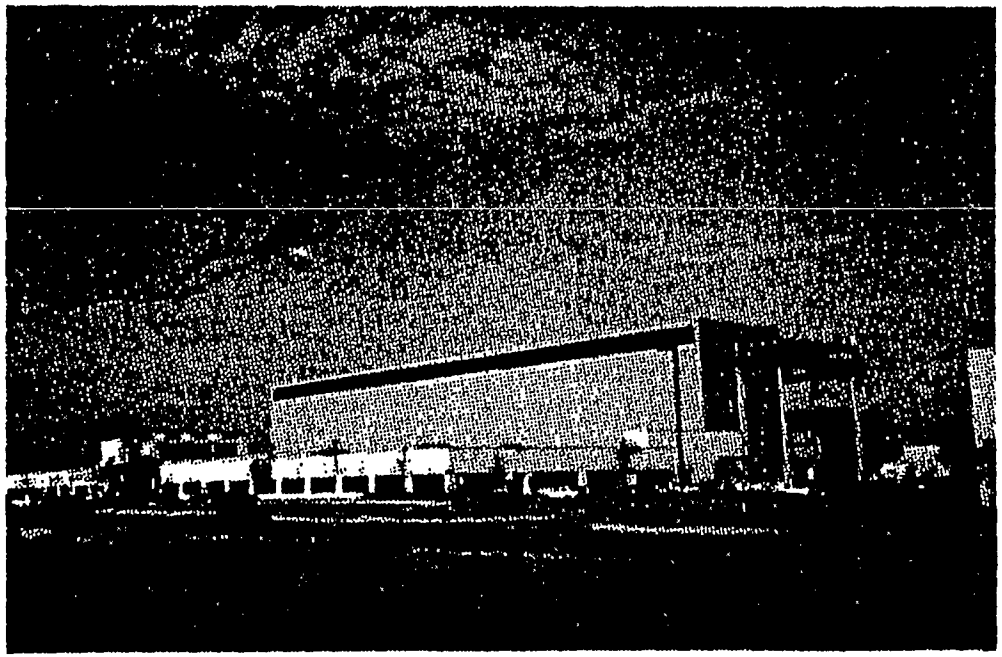

S CEM.0552

VG 2251.6

INTERDISCIPLINARY RESEARCH AND DEVELOPMENT

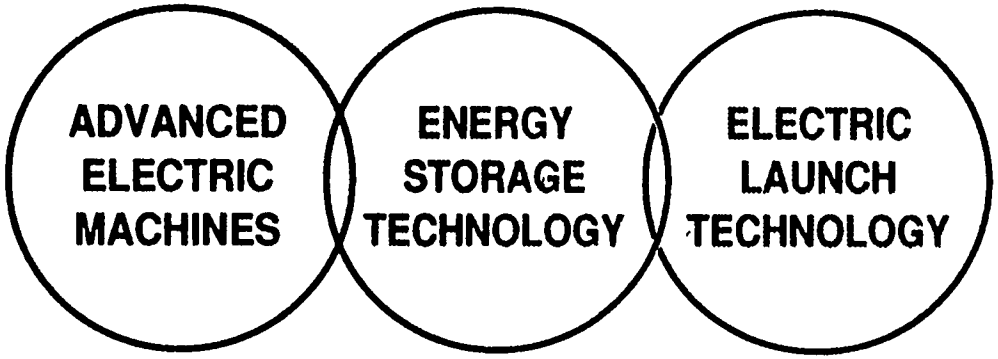

SCIENTIFIC APPLICATIONS	INDUSTRIAL APPLICATIONS	COMMERCIAL APPLICATIONS	MILITARY APPLICATIONS
• fusion	• welding	• electromagnetic suspension	• tactical & strategic weapons launch
• lasers	• sintering	• vehicle energy storage	• electric combat vehicles
• particle beams	• spraying	• electric vehicles	• integrated platforms
• hypervelocity impact	• forming	• utility power quality	• l.f. acoustic sources
• shock & seismic testing	• electric drives	• uninterruptable power	
• space launch	• engines	• utility load leveling	

ARDEC

Electric Armaments Directorate

Continuing Improvements in Compulsator Performance

VG 5674.1.C

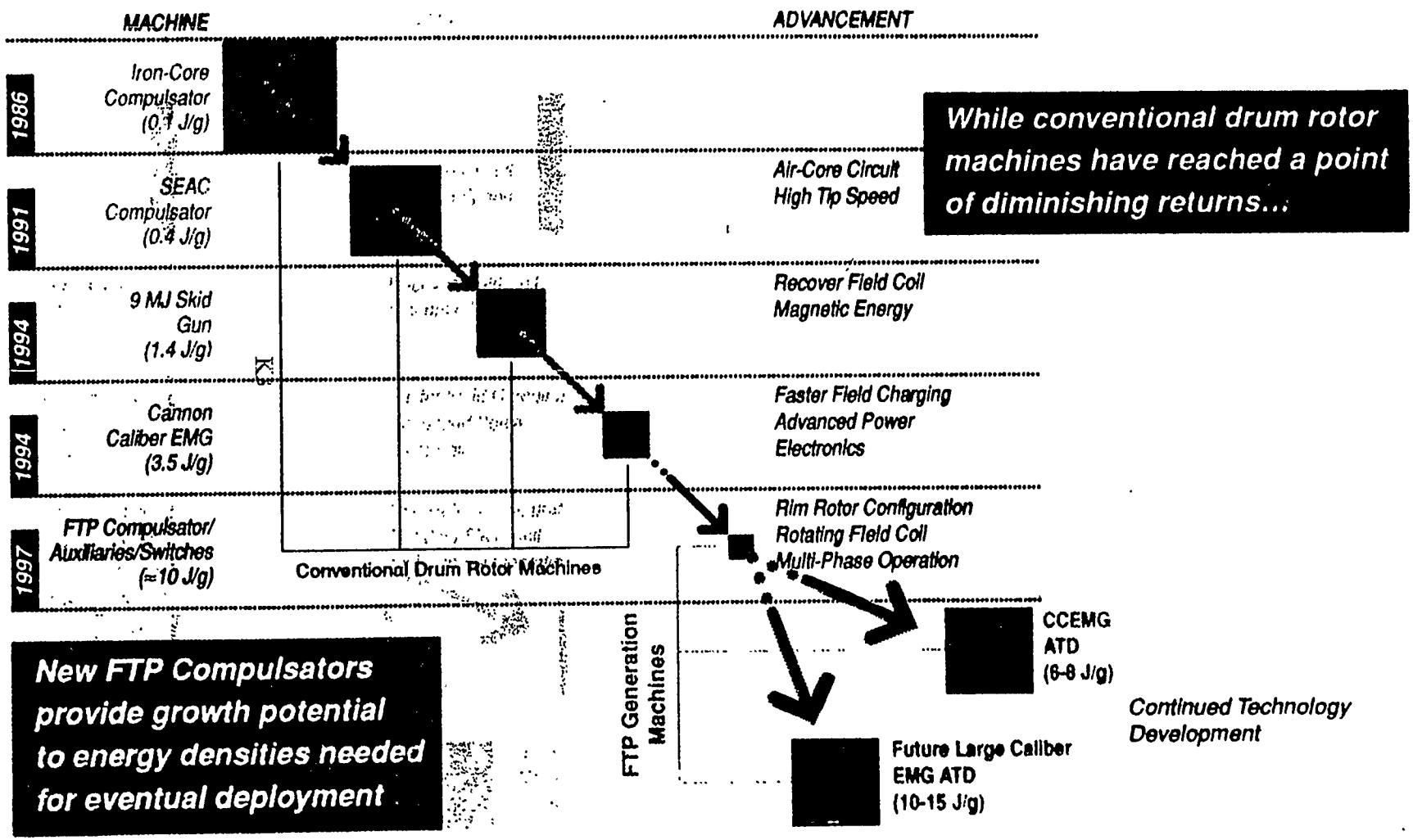

While conventional drum rotor machines have reached a point of diminishing returns...

New FTP Compulsators provide growth potential to energy densities needed for eventual deployment

SAIC

An Employee-Owned Company

CEM MLI GDLS Olin CAES PKD Westinghouse

CEM

ROTATING MACHINE PROJECTS AT CEM-UT

SUMMARY

PROJECT SYSTEM	HOMOPOLAR GENERATOR	IRON CORE COMP	SMALL CALIBER COMP.	TASK C COMP.	MEDIUM CALIBER COMP.	FTP COMP.
PEAK POWER PER PULSE	300 MW	800 kW	664 MW	27 GW	2.43 GW	40 GW
STORED ENERGY	10 MJ	38 MJ	9 MJ	250 MJ	40 MJ	252 MJ
SED ROTOR	2.3 Wh/kg	2.3 Wh/kg	16.2 Wh/kg	12 Wh/kg	11.4 Wh/kg	31 Wh/kg
PULSE ENERGY	1.5 MJ	1 MJ	350 kJ	9 MJ	380 kJ	20 MJ
PULSE CURRENT	1.5 kA	944 kA	386 kA	3.6 MA	800 kA	4.5 MA
RPM	6,200	4,800	25,000	8,800	12,000	10,000
TIP SPEED	165 m/s	197 m/s	530 m/s	470 m/s	446 m/s	580 m/s
ROTOR MATERIAL	4340 STEEL	4340 STEEL	COMPOSITE	COMPOSITE	COMPOSITE	COMPOSITE
BEARING TYPE	HYDRO-STATIC	HYDRO-STATIC	CERAMIC REB WITH HYDRO-STATIC DAMPERS	HYDRO-STATIC	CERAMIC REB WITH SQUEEZE FILM DAMPERS	CERAMIC REB WITH SQUEEZE FILM DAMPERS

VG 7117.2

The Texas Electric Vehicle Program is Part of a National Effort ...

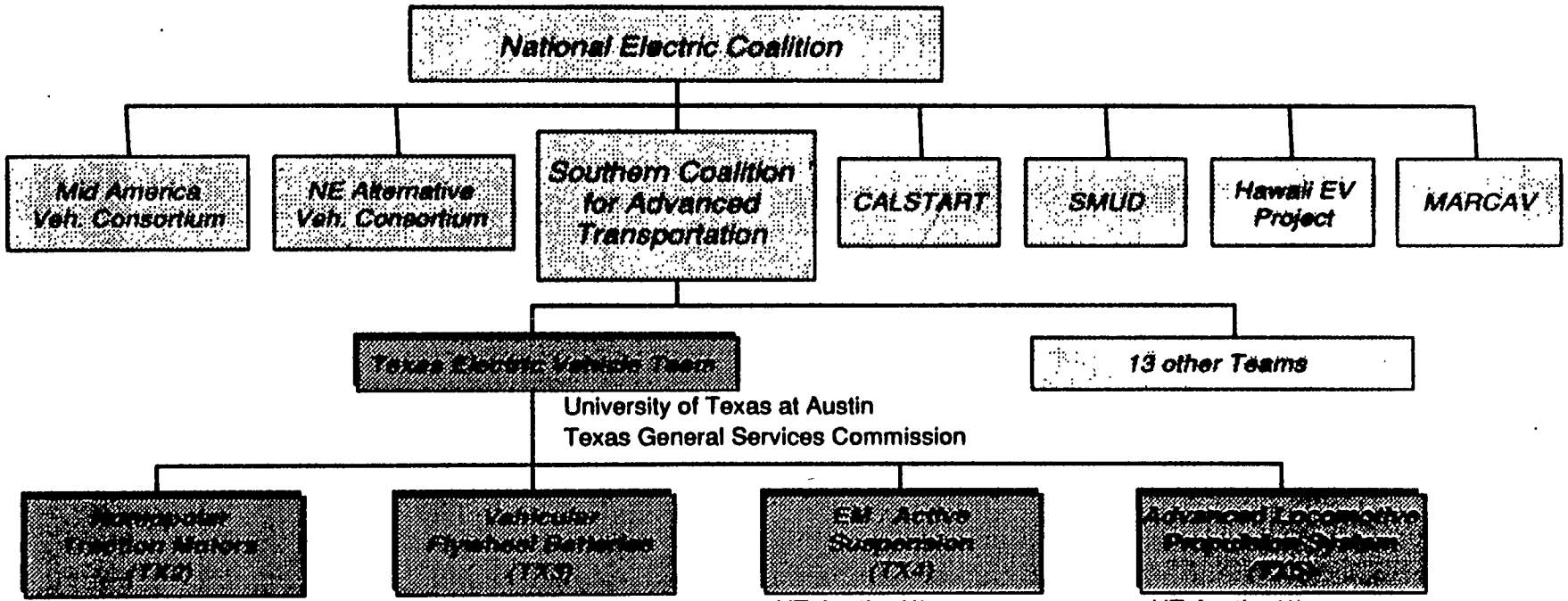

Nonsparker Traction Motors (TX2)

UT-Austin (1)
Parker Kinetic Design *(2)
Motor Dynamics Inc. *(3)
State Match Pool (3)
ARPA (3)

Vehicular Flywheel Batteries (TX3)

UT-Austin (1)
Allied Signal Aerospace *(1)
AVCON (1)
Central & SW Svcs *(3)
Houston Metro (4)
State Match Pool (3)
Texas Adv. Tech. Program (3)
ARPA (3)

EM / Active Suspension (TX4)

UT-Austin (1)
State Match Pool (3)
ARPA (3)

Advanced Locomotive Propulsion System (TX5)

UT-Austin (1)
Association of American Railroads (2)
Argonne National Laboratory (2)
General Motors Electro-Motive Division (1)
AlliedSignal Engines (2)
AlliedSignal Aerospace (1)
AVCON (1)
Federal Railroad Administration (3)
ARPA (4)
State Match Pool (3)
Texas Energy Coordination Council (3)

1 = Provides funding, recieves funding, and performs technical work
2 = Receives funding and performs technical work
3 = Provides funding only
4 = Potential funding source
** = Has expressed interest in licensing technology from U.T.*

VG 7308.1

FLYWHEEL BATTERY PROJECT

OBJECTIVES

- design, fabricate and test a flywheel battery suitable for installation on a public transit bus
- transfer technology to industry for commercialization

DESIGN GOALS

- 2 kWhr and 110 kW
- continuous duty
- mobile application

VG 7318.3

TYPICAL HYBRID BUS PERFORMANCE PARAMETERS

Vehicle Weight Loaded:	**30,000 lbs.**
Acceleration 0-50 MPH:	**40 s**
Wheel Motor Size:	**100 - 140 kW (total)**
Losses at Speed with Hotel Load:	**140 kW**
Prime power size with Flywheel:	**185 kW**
Prime power size without Flywheel:	**250 kW**
Miles traveled over 15 year life:	**600,000**
Hours of operation over 15 years:	**60,000 (12 hrs/day, 6 days a week)**
Estimated number of 0-40,000 rpm Cycles over 15 years:	**< 10,000**
Estimated 30 — 40-30,000 rpm Cycles over 15 years:	
Based on combined cycle:	**4,000,000**
Based on CBD cycle:	**5,500,000**

VG 7322.6

FLYWHEEL OVERVIEW

- composite design based on DoD composite rotor work
- flywheel consists of 8 rings assembled by tapered press fit
- flywheel assembled separately then press fit on titanium shaft
- designed for 5% safe overspeed (42,000 RPM) at 250° F

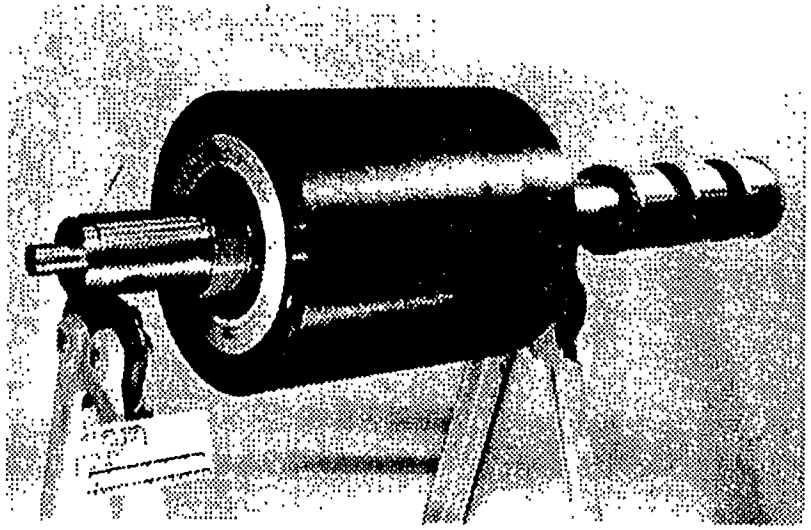

Design parameters:

Flywheel length:	5.00 inches
Flywheel diameter:	17.6 in. at rest, 17.7 in. at 42,000 RPM
Tip speed:	978 m/s at 42,000 RPM
Composite material:	IM7 Fiberite 977-2 Tow Preg System

AlliedSignal AEROSPACE Aerospace Systems & Equipment

SECOND GENERATION TPTL YIELDS HIGHER RELIABILITY/PERFORMANCE CAPABILITY

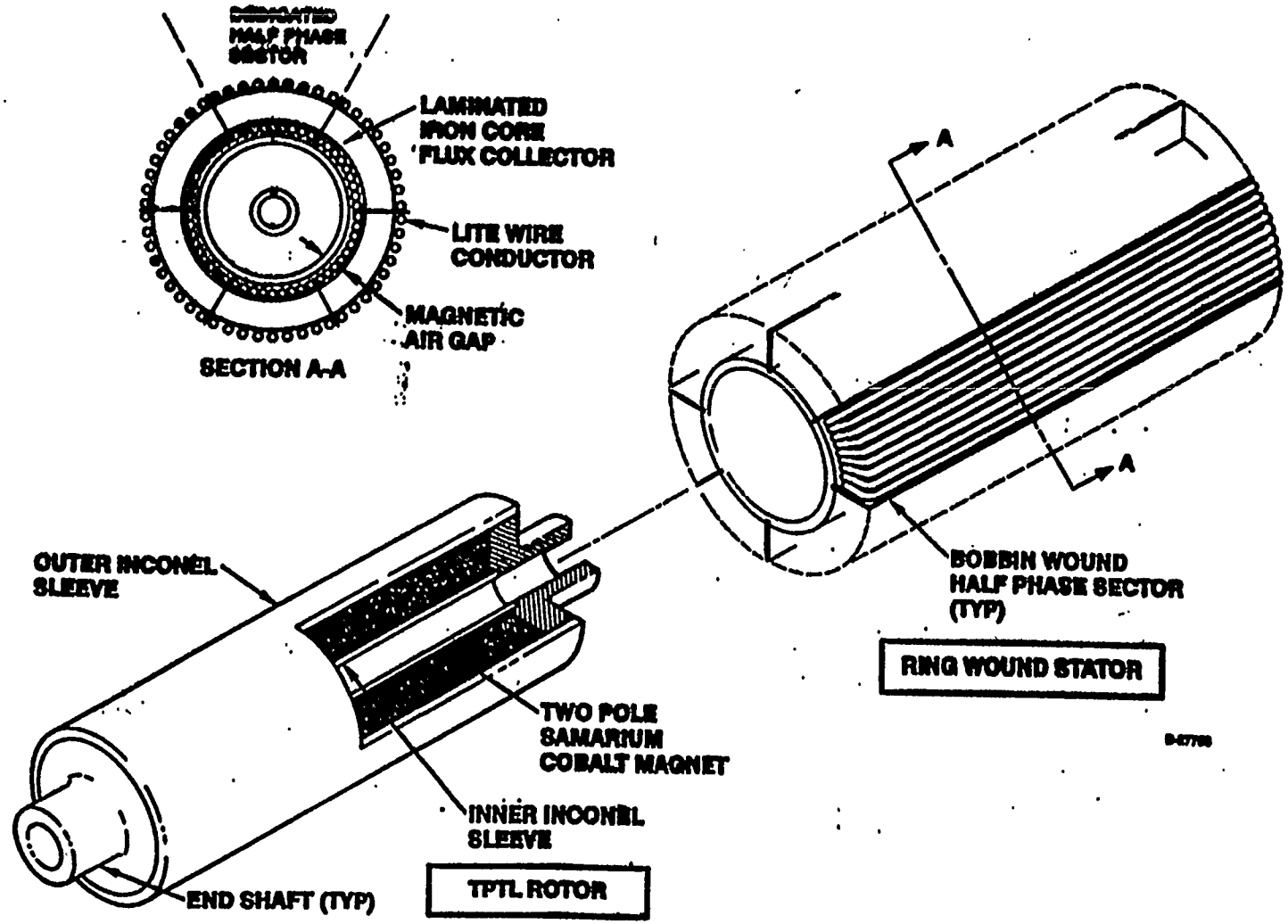

PROPRIETARY

IG-19244

K10

AlliedSignal
AEROSPACE

TPTL PM MACHINE EXPERIENCE

PROGRAM	POWER, KW	RPM	EM EFF	OPERATIONAL EXPERIENCE
COMPANY IR&D	86.00	45,000	94.4	OVER 1000 HR OF TESTIING
PFC COMPRESSOR	3.70	140,000	95.0	700 HR IN SIMULATED SPACE ENVIRONMENT
PFC TUBOALTERNATOR	0.40	250,000	94.5	
VAPOR CYCLE ECS	40.00	70,000	96.4	OVER 500 HR LAB TESTING
ISSA EVS FAN DRIVE	0.02	184,000	90.0	600 HR OF ENDURANCE TESTING
ISSA CDRA FAN DRIVE	0.17	115,000	90.1	2,800 HR SYS. & ENDURANCE
CCATTD	20.00	66,000	92.4	420 HR, INC. VIB., SHOCK, & ENV
USAFIECS	40.00	70,000	96.4	800 HR END. & QUAL. (VIB, ETC)
M1A1 APU	10.00	66,000	94.5	200 HR LAB, 100 HR SIM. BATTLE

VG 7828

MAGNETIC BEARINGS FOR THE BUS FLYWHEEL BATTERY

MAGNETIC BEARING DESIGN

- Permanent magnets for passive control of steady state loads
- Active electromagnets for transient load control

MAGNETIC BEARING LOAD CAPACITY

- 500 lb Capacity in thrust direction
  (4 times rotor weight, 3g + gravity load)
- 250 lb & 130 lb Capacity in radial direction
  (3 times rotor weight, 3g)

IF CAPACITY IS EXCEEDED

- Contact backup bearings
- Take up difference
- Return to normal afterwards

VG 7576

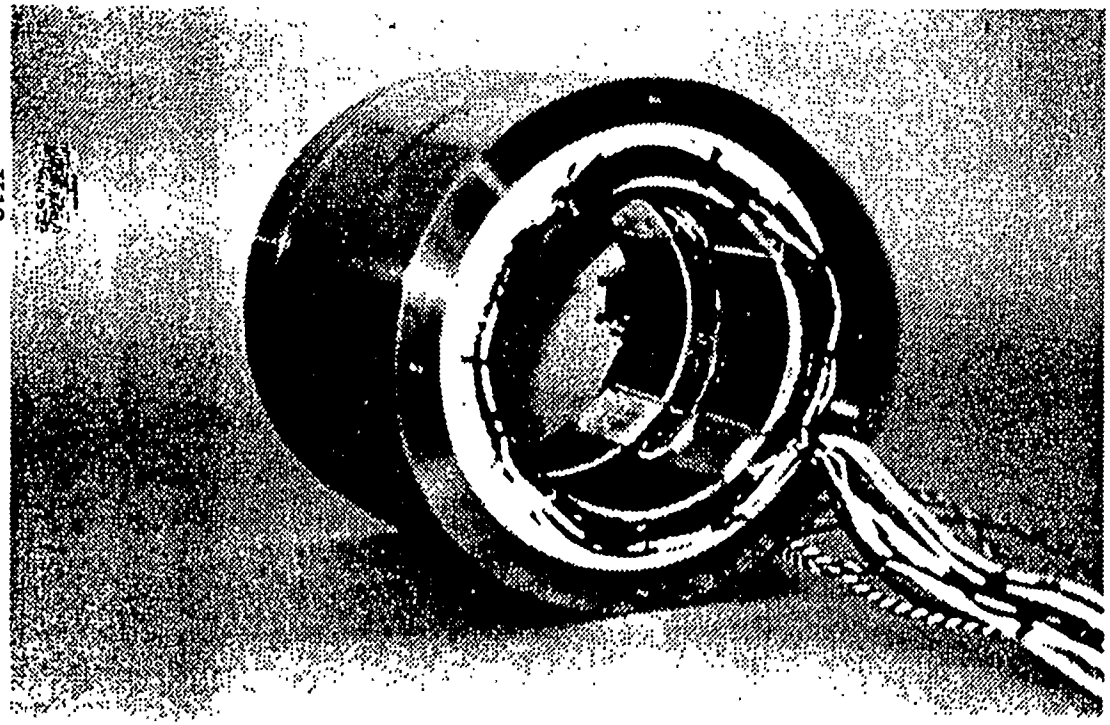

INTEGRATED COMBINATION BEARING

DESIGNED FOR:

40,000 rpm
15 Watts lost on Rotor
0.020 in. Radial Magnetic Gap
0.010 in. Gap to Backup Bearing
1.500 in. Shaft Diameter

VG 7625.1

FEDERAL RAILROAD ADMINISTRATION NON-ELECTRIC LOCOMOTIVE PERFORMANCE GOALS

Specific:

- "provide 150 mph continuous duty operation, if used in a train consist of one locomotive and four Amfleet cars"
- "accelerate from a stop to cover 3.5 miles in 2.5 minutes and 7 miles in 4 minutes"
- "forces applied by the locomotive to the track at 150 mph should not exceed that of Amtrak's AEM-7 locomotive at 100 mph"
- "meet Federal remissions standards, effective as of January 1999, SCAQMD standards of California, in the year 2010, whichever is the most restrictive"
- "noise environment created by the train should be in compliance with the regulations of 49 CFR, Part 210, for locomotives"
- "operate throughout its range in the shock and vibration environment of railroad operation for long periods"
- "fuel consumption, frequency and cost of major overhaul, and reliability of major components will be considered"
- "Operating and maintenance costs of the propulsion system will also be considered"

US Department of Transportation
Federal Railroad Administration

ARPA

ALPS
ADVANCED LOCOMOTIVE PROPULSION SYSTEM

VG 7254

PRIME POWER & ENERGY STORAGE CONFIGURATION COMPARISON

Component Weights

Prime Power
Generator
Flywheel Battery & Containment
Auxiliary Systems

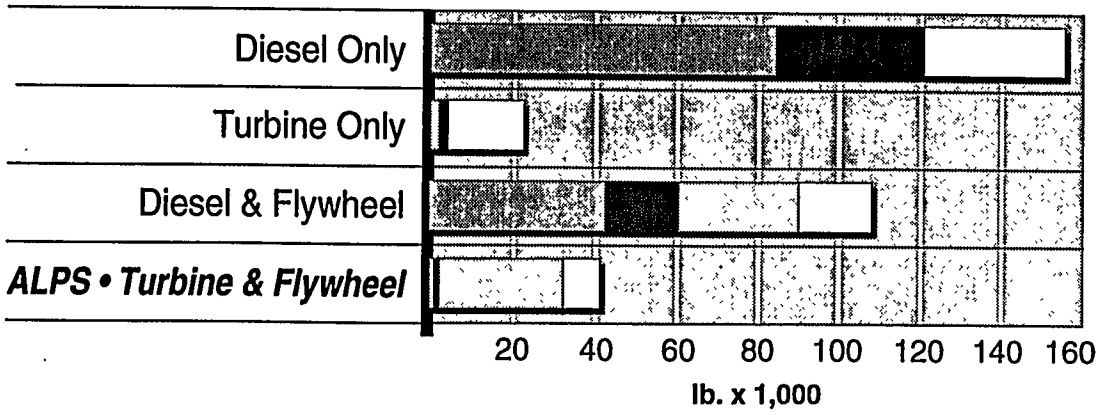

Fuel Consumption & Cost

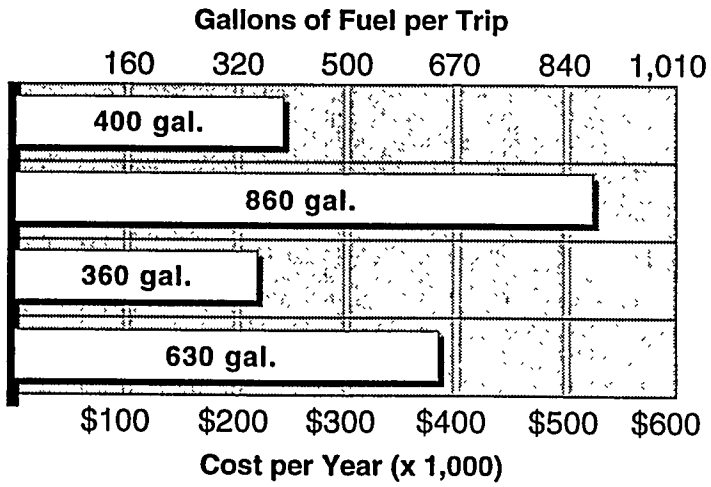

1001.1212

K15

University of Texas Center for Electromechanics | Association of American Railroads | Argonne National Laboratory | General Motors Electro-Motive Division | AlliedSignal *Engines* | AlliedSignal *Aerospace* | AVCON Advanced Controls Technology | Southern Coalition for Advanced Transportation

US Department of Transportation
Federal Railroad Administration

ARPA

ALPS
ADVANCED LOCOMOTIVE PROPULSION SYSTEM

VG 7666

TECHNOLOGICAL CONTRIBUTIONS OF THE ALPS TEAM

Argonne National Laboratory

SAFETY ASSURANCE

- containment design & analysis
- probabilistic risk assessment

University of Texas

FLYWHEEL BATTERY

- energy storage system optimization and design
- fabrication and assembly
- laboratory testing and demonstration

Association of American Railroads

RAIL INFRASTRUCTURE COMPATIBILITY

- route & economic impact analysis
- vehicle dynamics requirements
- field demonstration and testing

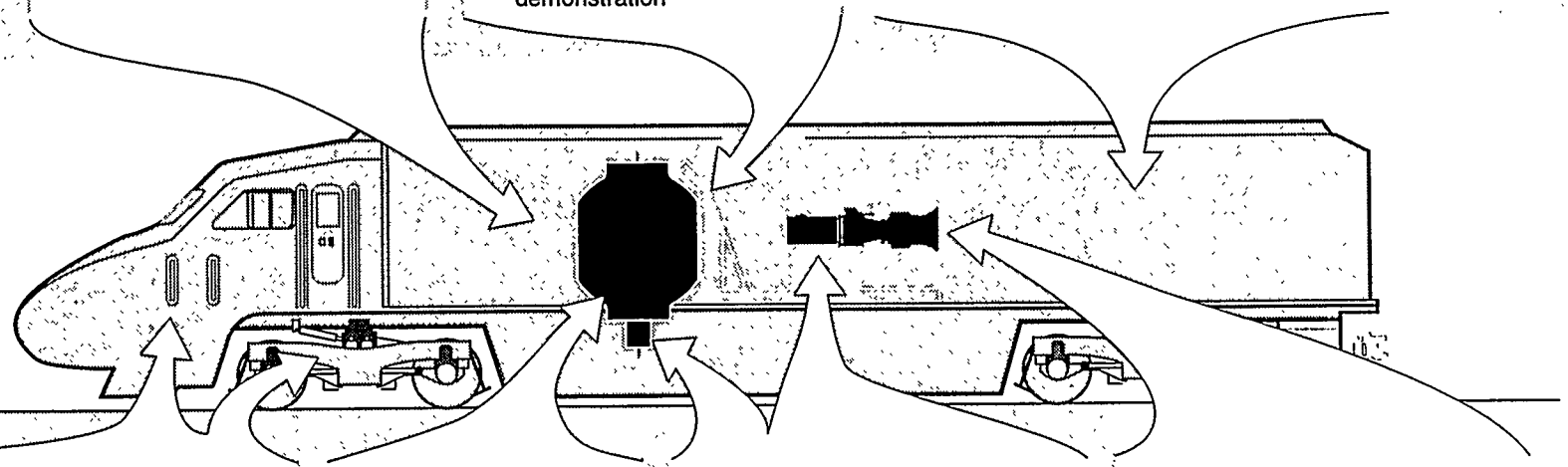

General Motors Electro-Motive Div.

LOCOMOTIVE

- system integration
- traction motor & power conditioning interface and control
- future product development requirements

AVCON

MAGNETIC BEARINGS

- magnetic bearings

AlliedSignal — Aerospace

MOTOR — GENERATORS

- power generation
- motor—generator development

AlliedSignal — Engines

TURBINE ENGINE

- prime power compatibility
- fuel efficiency and advanced combustion cycle analysis
- emissions and noise mitigation

VG 7644.2

600MJ FLYWHEEL BATTERY COMPONENTS

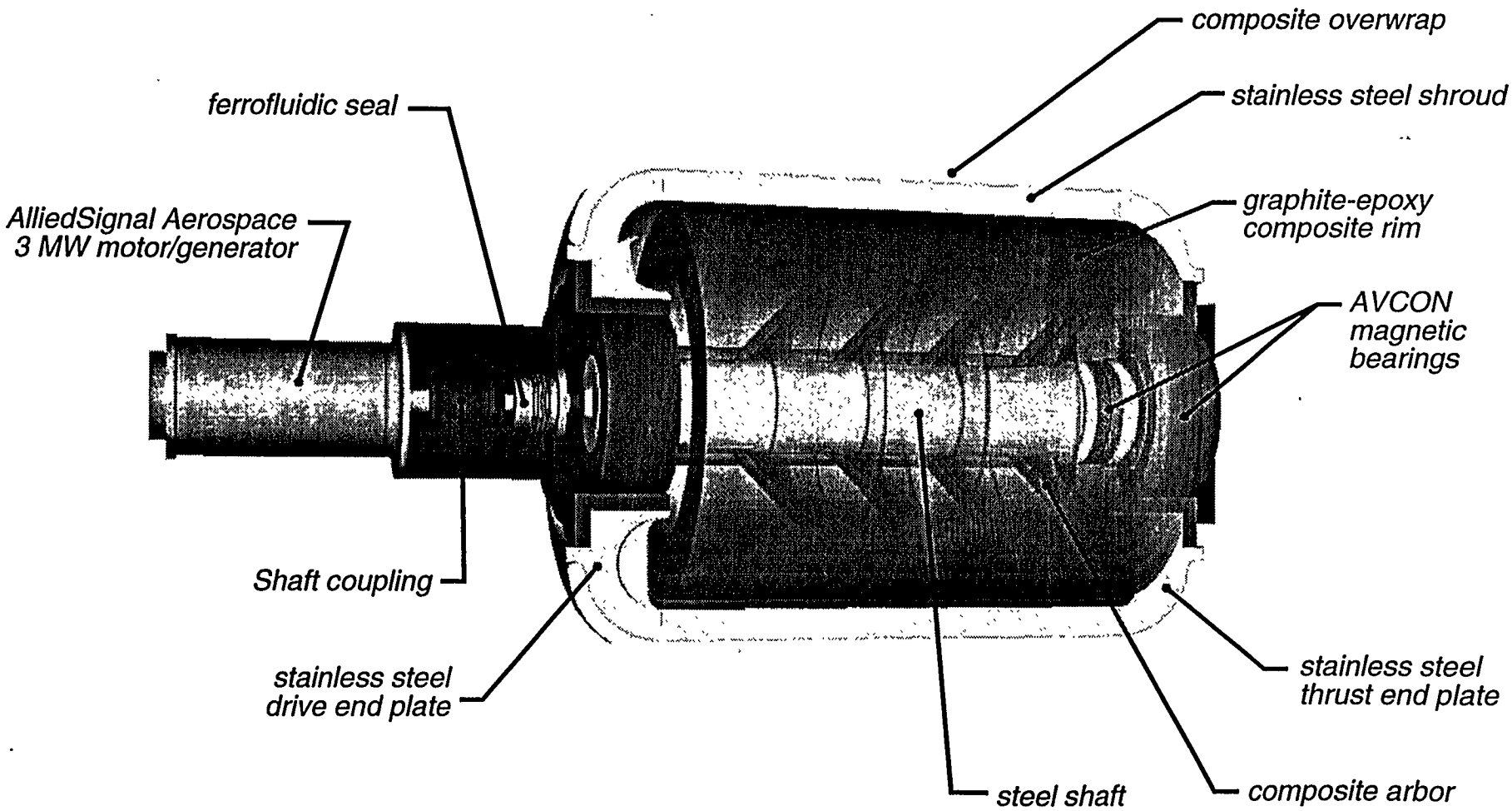

IDEALIZED ALPS POWER TRAIN COMPONENTS

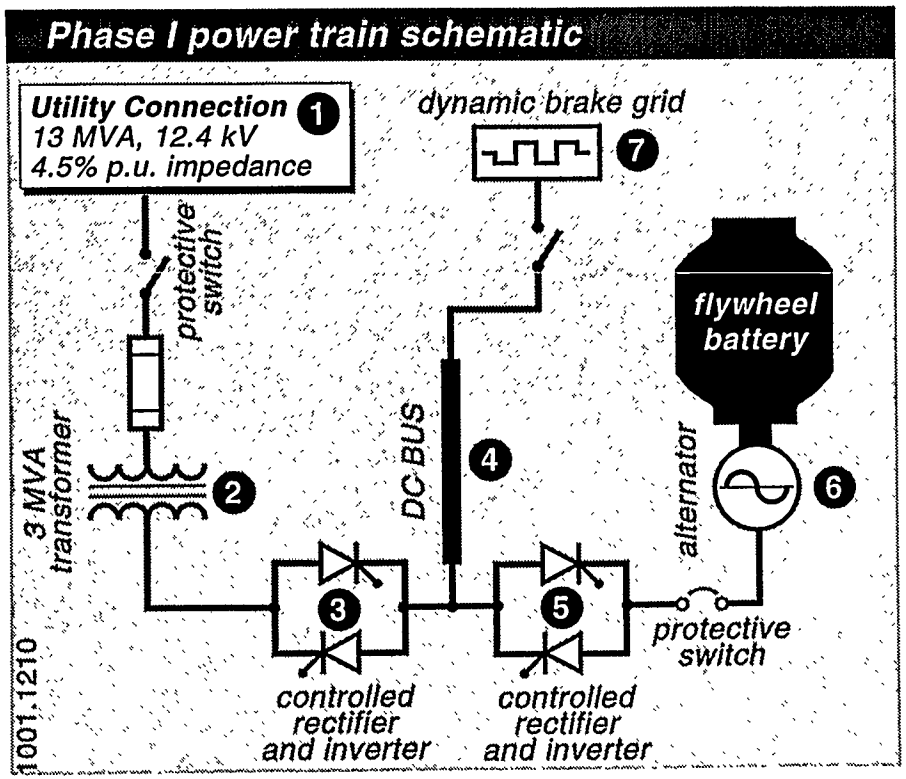

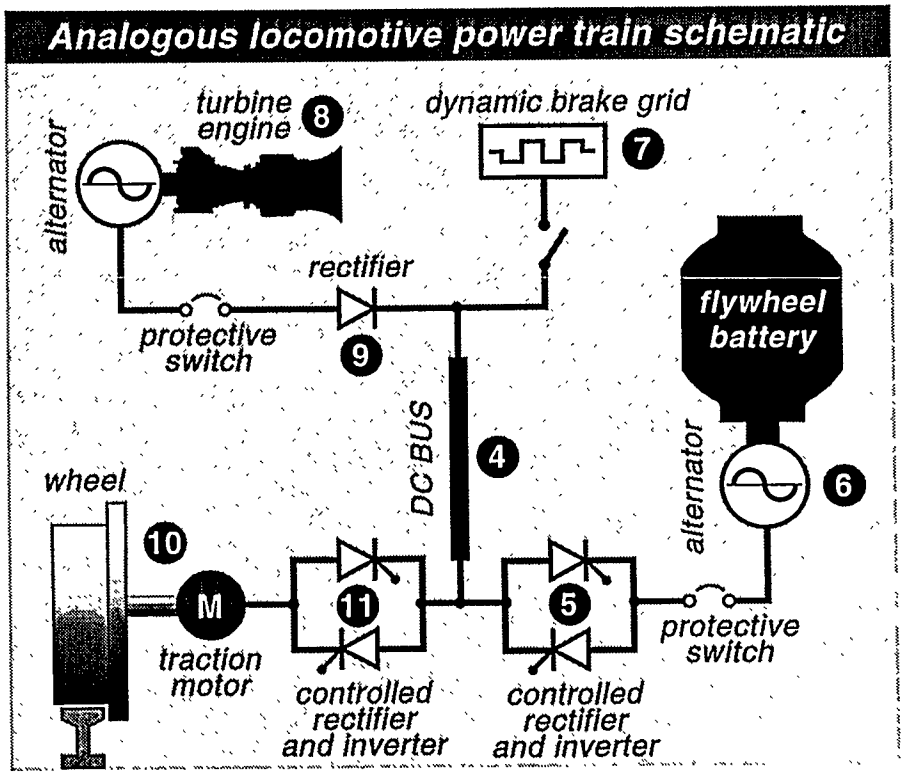

US Department of Transportation
Federal Railroad Administration

ARPA

ALPS
ADVANCED LOCOMOTIVE PROPULSION SYSTEM

VG 7265

AAR TRANSPORTATION TECHNOLOGY CENTER
PUEBLO, COLORADO

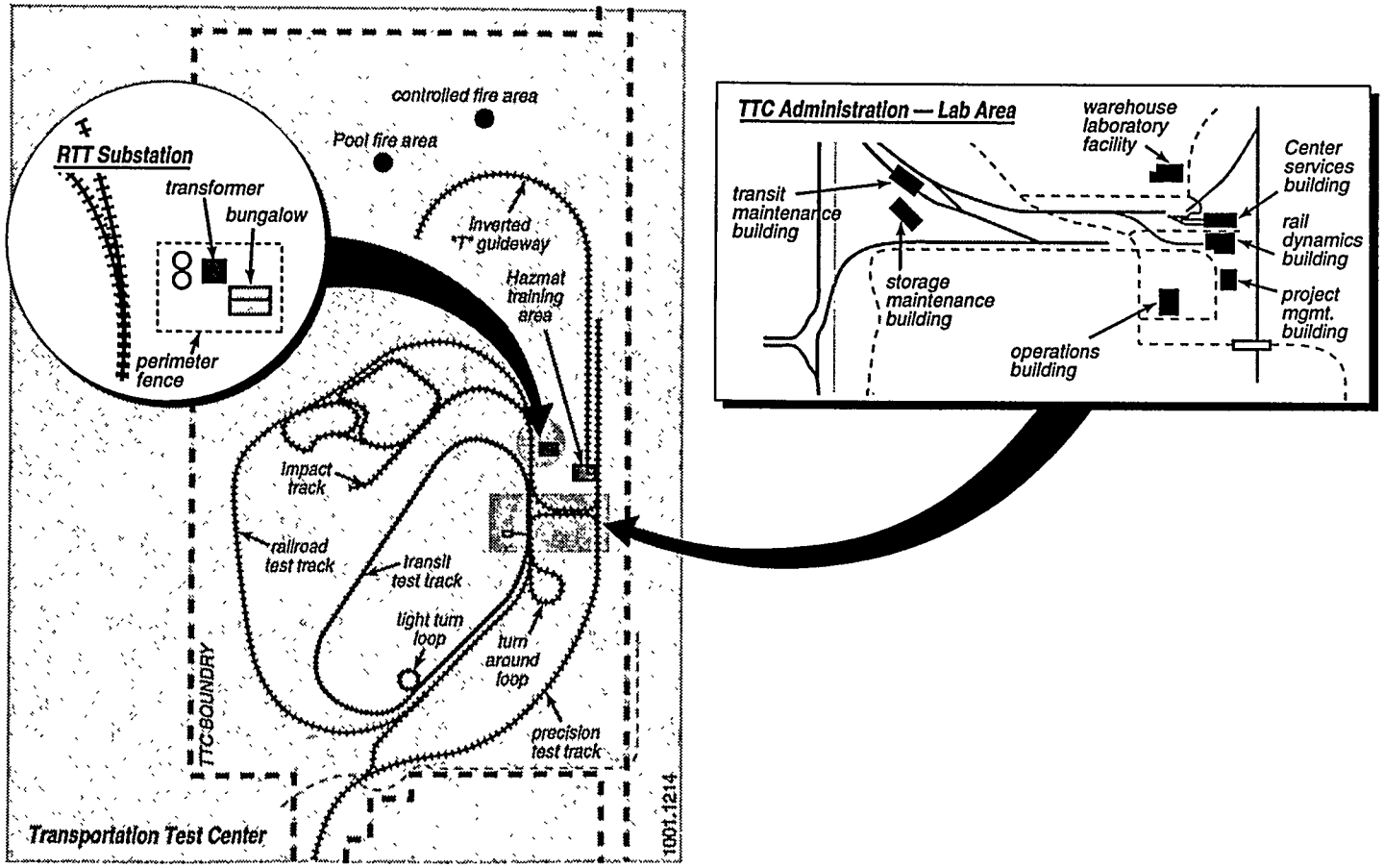

K19

University of Texas Center for Electromechanics | Association of American Railroads | Argonne National Laboratory | General Motors Electro-Motive Division | AlliedSignal Engines | AlliedSignal Aerospace | AVCON Advanced Controls Technology | Southern Coalition for Advanced Transportation

VG 7060

RAPID CHARGING SYSTEM WITH LOAD LEVELING FLYWHEEL BATTERY

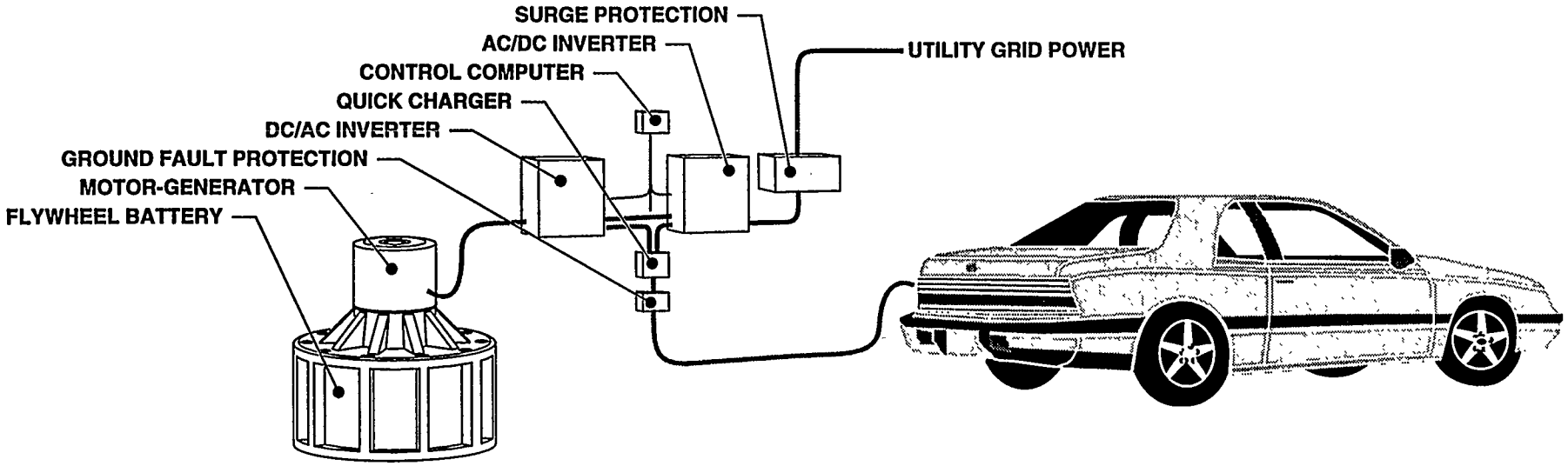

1001.1142

VG 6854.1

ROBINS AFB 9TH STREET SUBSTATION CIRCUIT 5 LOAD LEVELING PROFILE

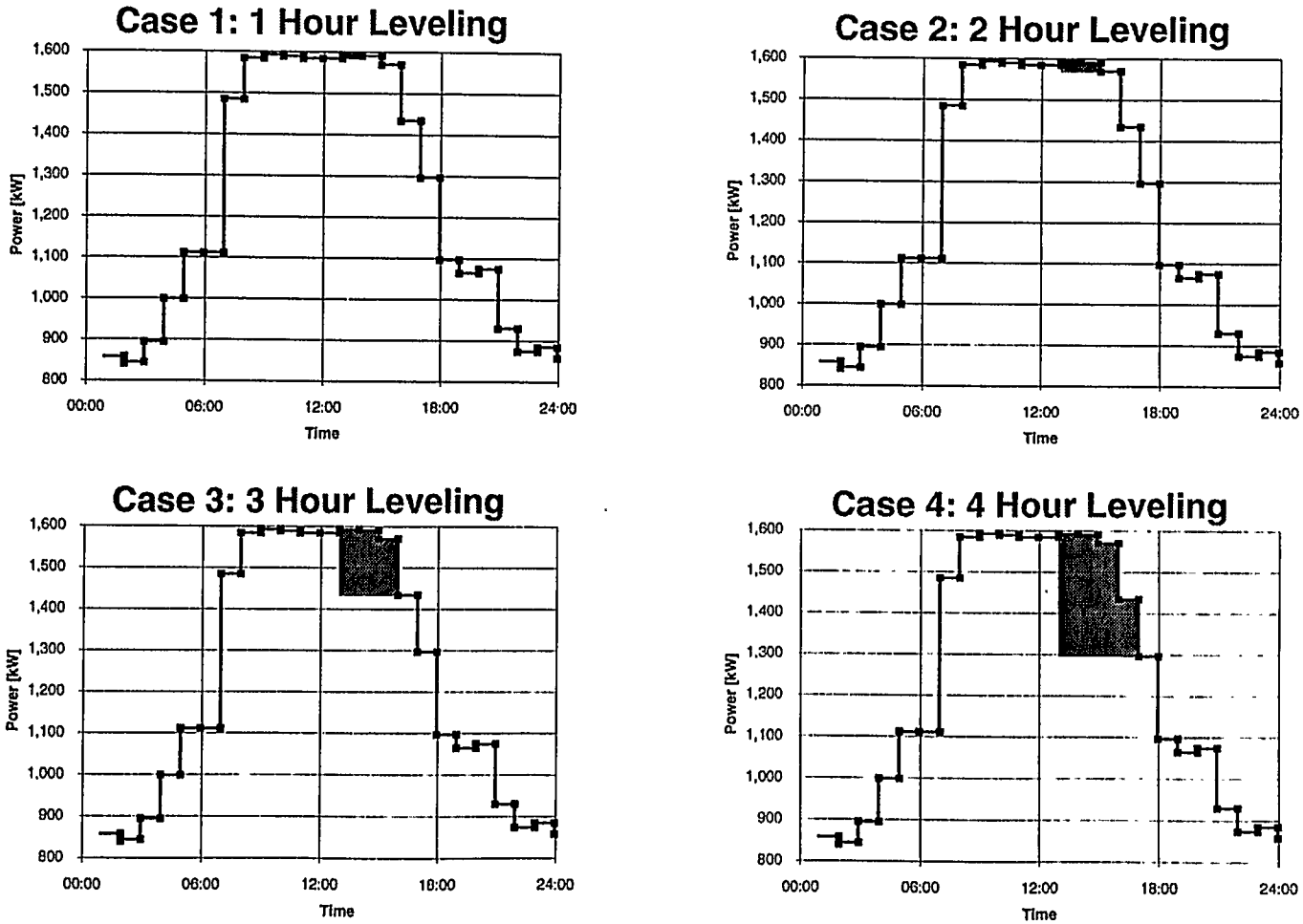

- assumes peak demand and consumption savings occur from 13:00 to 22:00
- assumes summer week-day load

VG 6838.1

FLYWHEEL BATTERY LOAD LEVELING ANALYSIS

	FWB PEAK POWER (kW)	FWB DELIVERED ENERGY (kWhr)	LEVELING TIME (hr)	CONSUMP. + DEMAND SAVINGS PER YEAR	PROTOTYPE SYSTEM COST @ $1,000/kWhr	PROTOTYPE SYSTEM PAYOFF (YEARS)	POWER/ ENERGY RATIO
ROBINS AFB 9TH STREET SUBSTATION, CIRCUIT 5							
Case 1:	2	2	1	$156	$2,000	13	1.00
Case 2:	23	44	2	$1,899	$44,000	23	0.52
Case 3:	159	452	3	$13,884	$452,000	33	0.35
Case 4:	297	1,004	4	$26,749	$1,004,000	38	0.30
ELECTRIC VEHICLE RAPID CHARGE							
EV Charge: (1 per day)	200	30	0.15	$14,700	$30,000	2.0	6.67

$$\text{PAYOFF} = \frac{\begin{pmatrix}\text{system}\\ \text{specific}\\ \text{cost}\end{pmatrix}}{\begin{pmatrix}\text{power/}\\ \text{energy}\\ \text{ratio}\end{pmatrix}\begin{pmatrix}\text{demand}\\ \text{charge}\\ \text{savings}\end{pmatrix} + \begin{pmatrix}\text{consumption}\\ \text{charge}\\ \text{savings}\end{pmatrix}} = \frac{[\$/\text{kWhr}]}{[1/\text{hr}][\$/\text{kW/year}] + [\$/\text{kWhr/year}]} = [\text{years}]$$

VG 7731

SEMICONDUCTOR FABRICATION FACILITY

POWER INTERRUPTION IMPACT ON REVENUE

Assumptions:

5,000 wafers per week production

30 wafers per hour (24 hours per day, 7 days per week)

200 chips per wafer

$20 per chip (packaged cost)

2 hours to recover from interruption
(effect on bottleneck operation)

5 to 10 interruptions per year

Revenue Lost:

$1,200,000 to $2,400,000 per year

VG 7491

30 MW FLYWHEEL BATTERY UPS SYSTEM CONCEPT

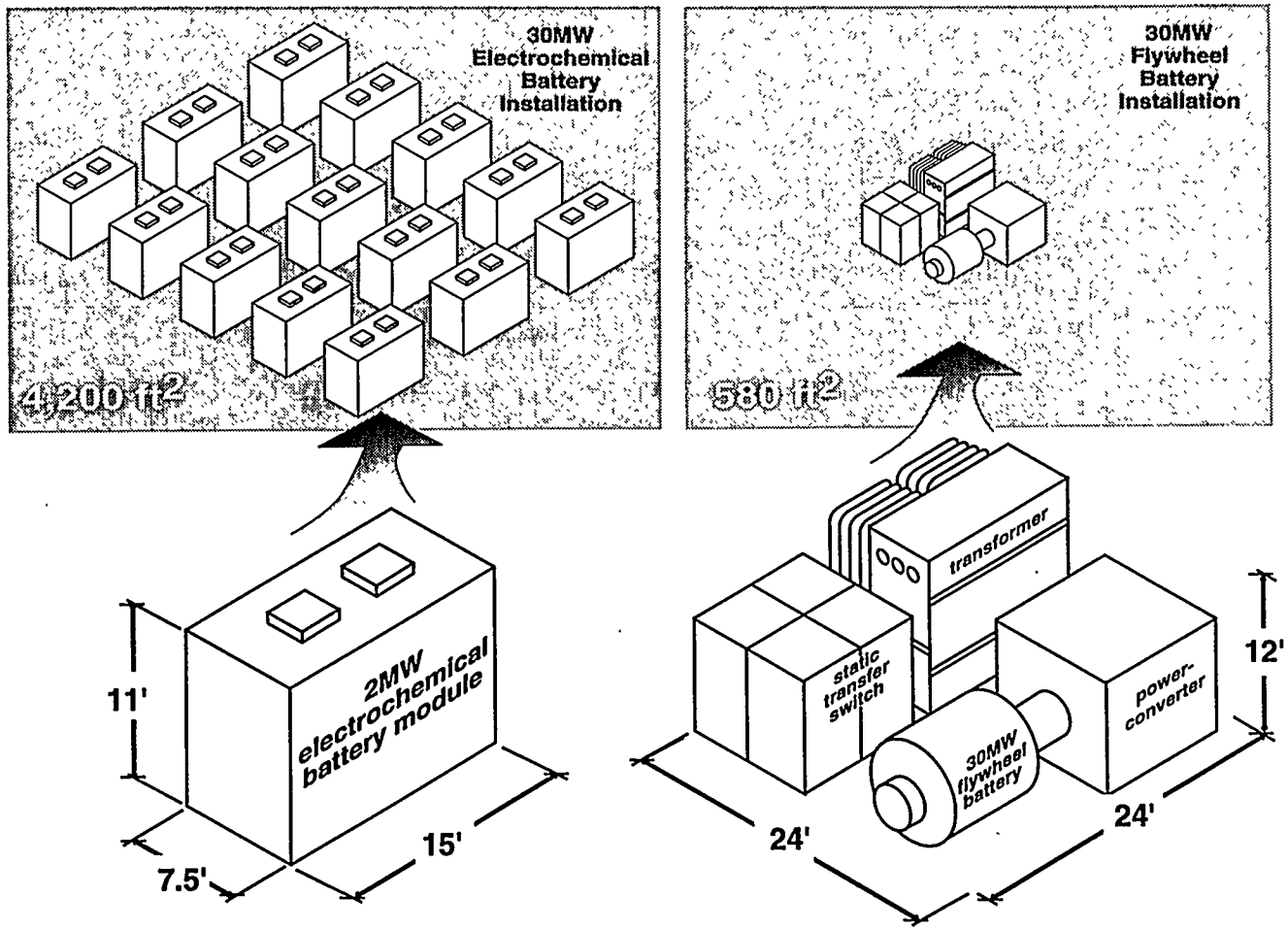

VG 7733

POWER QUALITY NEEDS ASSESSMENT

Cost Assessment

- Type of Industry
- Lost Revenue
- Scrap Cost
- Idle Time Cost

} Characterize Effects of Interruption

Power Quality Modeling

- Source
  - *dual feeds*
  - *transmission*
  - *etc.*
- Load
  - *impedance*
  - *etc.*
- Faults
  - *lightning*
  - *trees fallen*
  - *etc.*
- Solutions
  - *static transfer*
  - *batteries*
  - *capacitors*
  - *flywheels*
  - *SMES*
  - *etc.*

} Site Dependent

Economics

- Competing Technologies
- Internal Rate of Return
- Return on Investment

} What the Market Will Bear

Development Plan

- Critical Components
- Intermediate Demo
- Full-Scale Demo
- Commercialization

} What's Needed to Solve the Problem

VG 7736

STATIONARY, INTERMITTENT DUTY FLYWHEEL BATTERIES

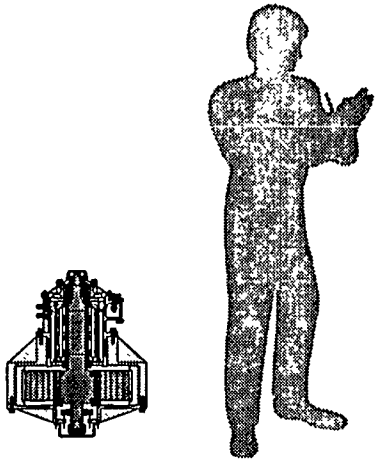

0.3 MW Peak
3.6 MJ Delivered
7.2 MJ Stored
(12 seconds)
400 lbs

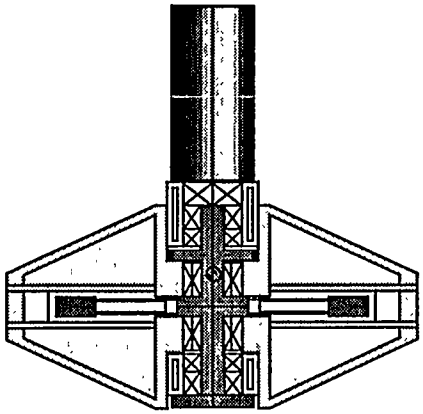

2.0 MW Peak
20 MJ Delivered
40 MJ Stored
(10 seconds)
6,100 lbs

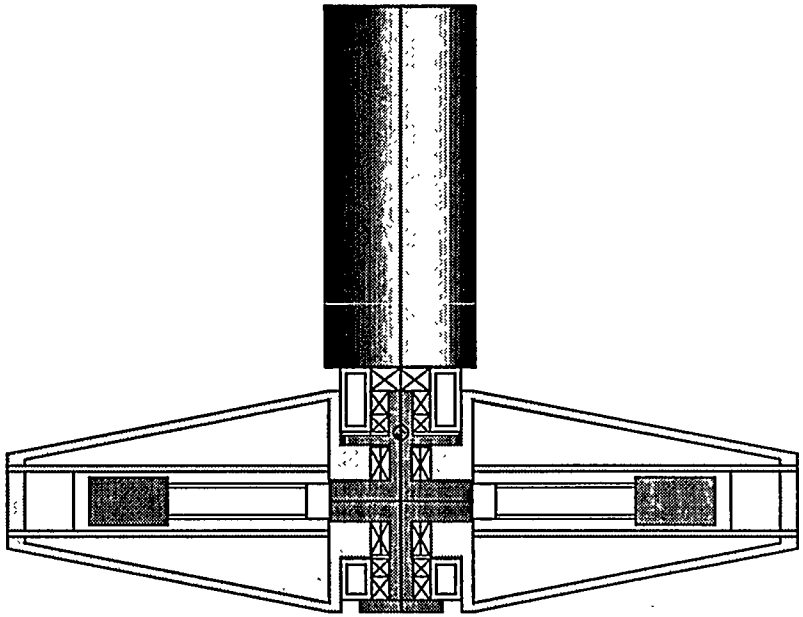

20 MW Peak
200 MJ Delivered
400 MJ Stored
(10 seconds)
29,500 lbs

VG 7051.2

FLYWHEEL BATTERY PERFORMANCE REGIMES
(ROUGH ORDER OF MAGNITUDE)

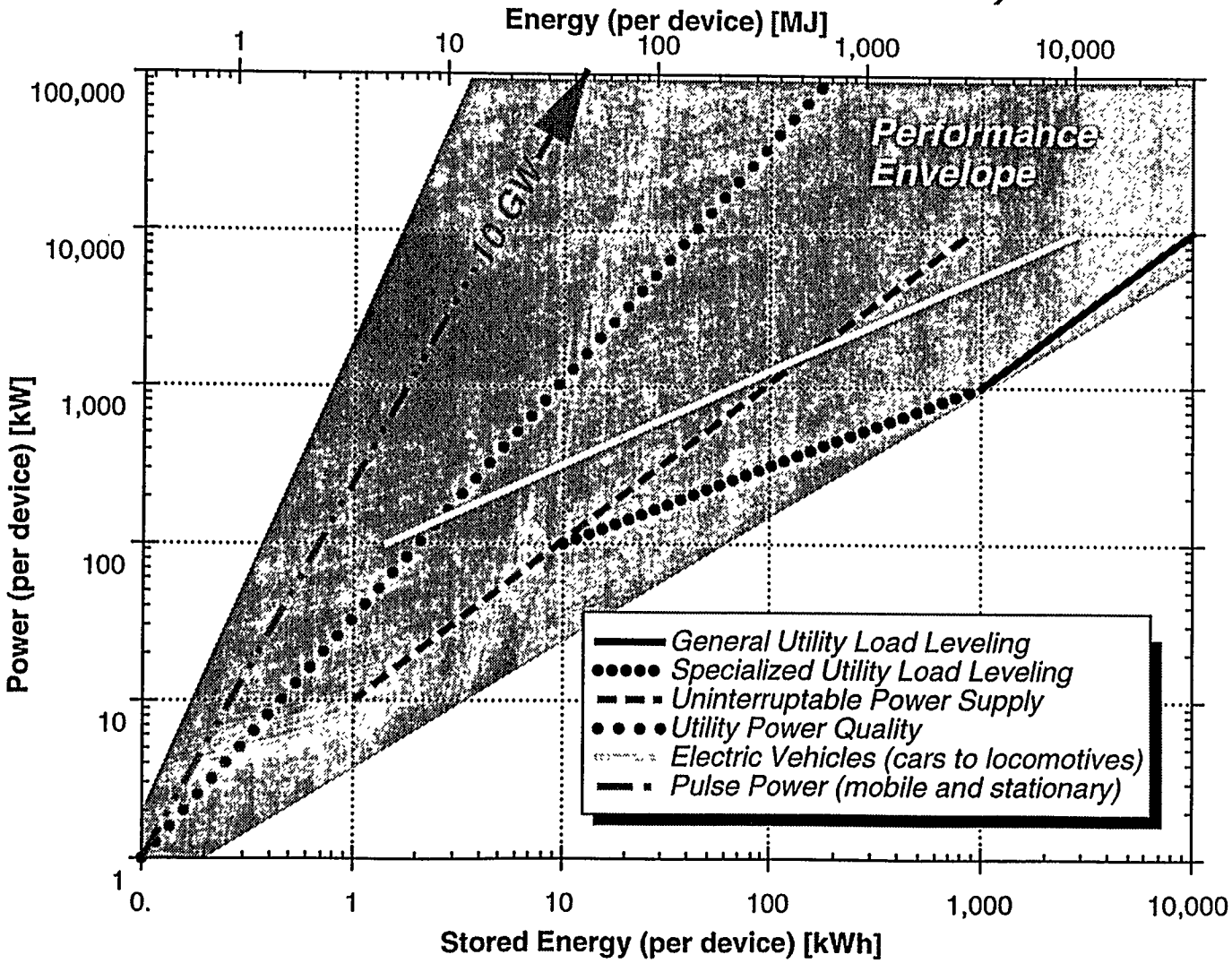

ADVANCED TECHNOLOGY CERAMIC BEARINGS IN THE FLYWHEEL SYSTEMS AT WORLD FLYWHEEL CONSORTIUM

Presented by Lewis B. Sibley
Tribology Systems, Incorporated

WORLD FLYWHEEL CONSORTIUM, INC.

November 1, 1995

®

TRIBOLOGY CONSULTANTS

TRIBOLOGY SYstems INC

TRIBOLOGY SYSTEMS HAS ACHIEVED A DRAMATIC TECHNOLOGICAL BREAKTHROUGH IN THE DESIGN OF LONG-LIFE SELF-CONTAINED SOLID-LUBRICATED CERAMIC BALL BEARINGS, BASED ON THE SUCCESSFUL TESTING OF:

- Solid-lubricated all-ceramic bearings 30 years ago at 1500 F (Wear, 6 (1963) 226-40)
- Hybrid ceramic bearings 15 years ago at 93,500 rpm (NATO\AGARD #323 (1982) 5)
- Solid-lubricated, 300,000-mile wear life, diesel-engine bearings 10 years ago (Cummins Report to TACOM #13098 (1985) 19-27)

World Flywheel Consortium, Inc.

TRIBOLOGY SYstems INC

TRIBOLOGY'S PATENTED TECHNOLOGY CONTROLS THE MOTION AND LUBRICATION OF THE BEARING CONTACTS TO PROVIDE:

- Higher speeds and temperatures and longer maintenance-free life than commercial bearings, based on fully-dynamic computer analysis and life testing
- Order of magnitude lower ball/cage pocket forces, resulting in two orders of magnitude longer life, verified by testing in high-speed motors now running 50 times longer
- Significantly lower friction than even magnetic bearings, verified by the slowing of the no-load decay speed on touch-down bearings after shutting off magnetic bearings
- Zero outgassing in high vacuum, compared to commercial bearings, verified by soaking in a non-pumped one-micron vacuum for four years with no loss of vacuum

World Flywheel Consortium, Inc.

Technology Benefits

Tribology's Proprietary Technologies Operate:

- in *extreme temperatures*, both high and low
- with *no outgasing*, i.e. works in a vacuum
- for *up to 15 years* without added lubrication
- at *high speeds* because of unique cage design
- at significantly *lower maintenance costs*
- with *reduced vibration* using tuned, non-fluid mounting system
- with *indefinite storage life*; no breakdown of lubricant or rusting of balls

Tribology's solid lubricant system is also *inexpensive* compared to competing technologies with inferior performance

WORLD FLYWHEEL CONSORTIUM (WFC) HAS SOLVED ALL THE TECHNICAL PROBLEMS NEEDED FOR COMMERCIALLY VIABLE FLYWHEEL SYSTEMS

Problem	WFC Solution	Advantages
• Long-life low-friction bearings in vacuum	Patented AEROFLOAT™ ceramic bearings	Low cost, high reliability, negligible friction
• Vibration-free rotor over wide speed range	Patented FLEXLIFT™ vibration decoupler	Only a few tenths of a G at all speeds for long life
• Centrifugally stable composite flywheel	Patented FLEXRIM hub and prestressed rings	Negligible mass shift at all speeds, benign failure mode
• Elimination of all safety concerns	Patent-pending energy dump/fail-safe design	Removes potentially damaging kinetic energy in benign way
• Low idle loss, compatible power interface	Patented motor design features and controls	Long stand-by life, power conditioned to precise needs
• Low cost in high-volume production	Motor/controls factories, bearing & wheel production affiliates	Basically simple design suited to existing automation methods

Principals

- Ralph Flanagan, President of Flywheel Energy Systems, Inc. (FESI), Ottawa, Ontario, Canada:
  Proprietary composite wheel design and fabrication process - over 30 years experience. Flanagan is recognized as a flywheel industry expert with superior performance wheel design.

- Lewis Sibley, President of Tribology Systems, Inc. (TSI), Paoli, PA, USA:
  Patented, long-life, self-lubricating bearings with vibration elimination and thermal balance design - over 40 years experience. TSI's technology has been sought out by flywheel industry participants.

- Hao Huang, V.P. of Engineering and Development of Montevideo Technology, Inc. (MTI) (SL Industries subsidiary), Montevideo, MN, USA:
  Axial gap, ultra-compact, high-speed motor/generators and advanced electronic controls - manufacturing capabilities in USA and Mexico. Huang is well known in the field of digital signal processing (DSP) and optimization of high density AC and DC motors.

- Technology Management & Funding (TMF), Princeton, NJ, USA:
  Sizable, growing portfolio of technology companies selected for their ability to impact multiple markets and change the competitive dynamics of those industries. TMF is a principal in these companies and works to build value through partnering arrangements with large corporations that have established market channels.

- Members of the WFC have been quoted in numerous flywheel technology articles including The Wall Street Journal, Popular Science, Mechanical Engineering and numerous other industry periodicals.

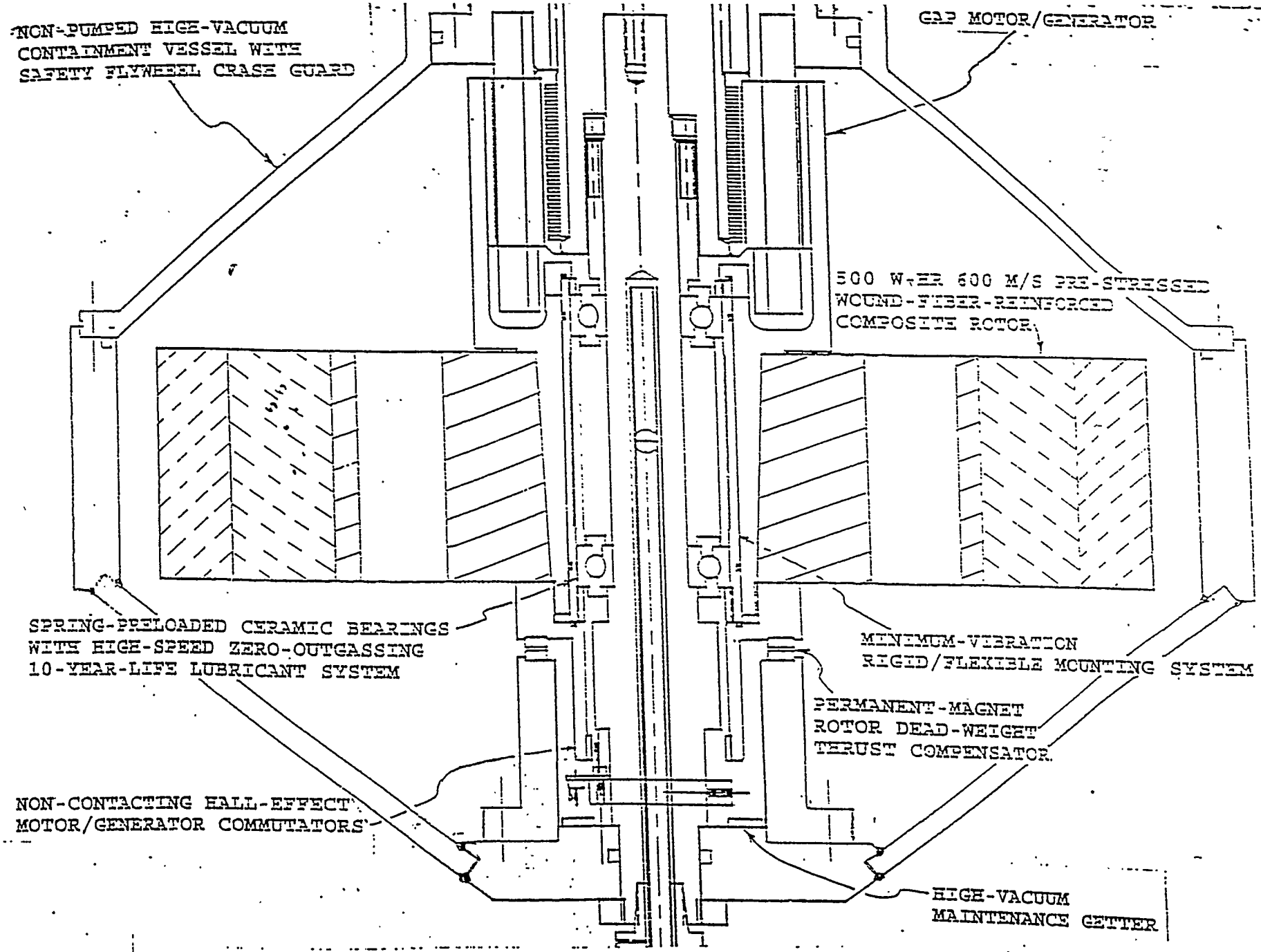

WFC CURRENT-TECHNOLOGY SPINNING-AT-FULL-SPEED DEMONSTRATOR FLYWHEEL SYSTEM

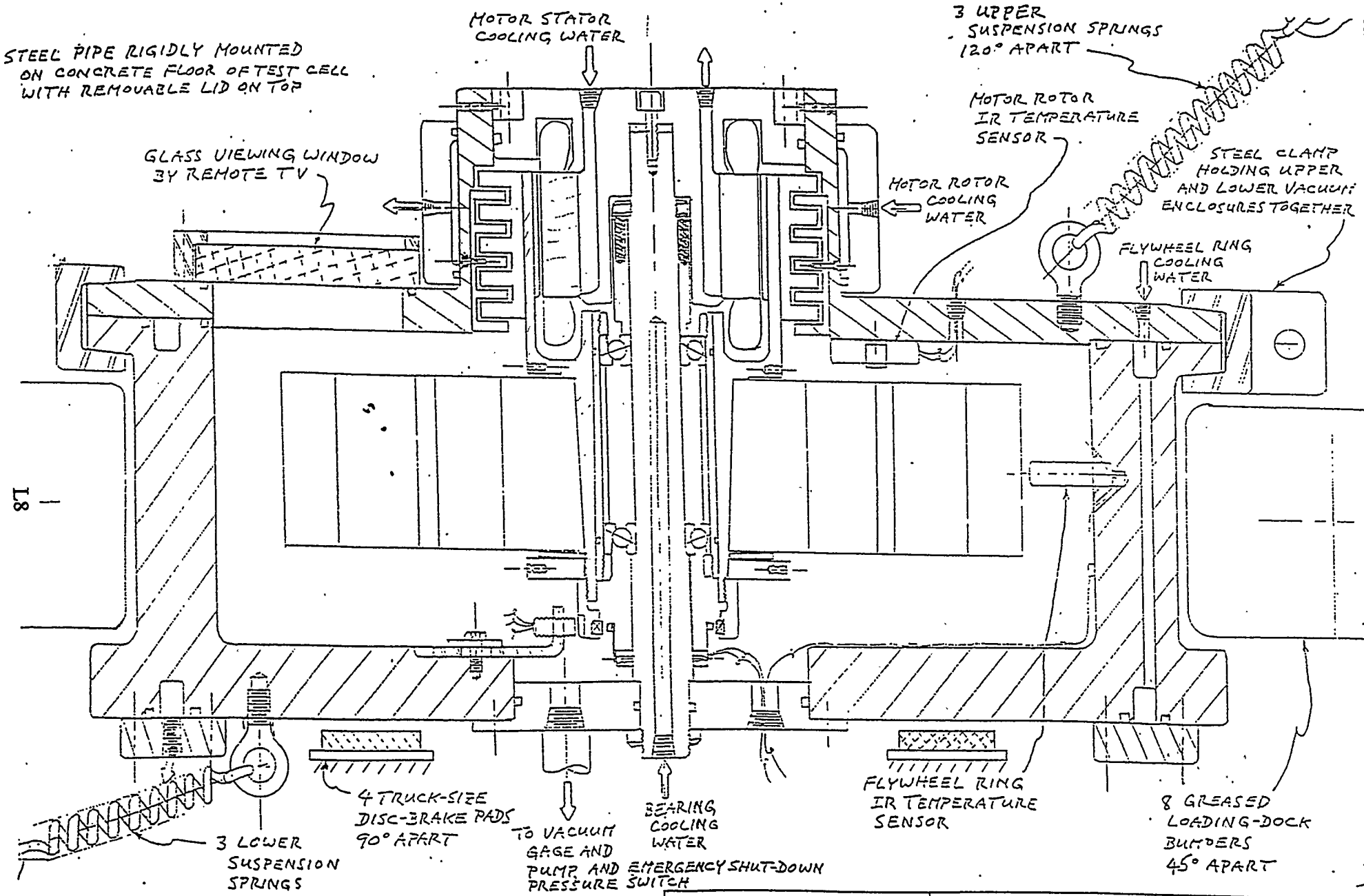

LEWIS B. SIBLEY
Tribology Consultants
504 Foxwood Lane, Paoli, PA 19301

NOTE: NEW PARTS REQUIRED ARE SHOWN CROSS HATCHED

DRAWN	CHECK	APPR.	SCALE HA
—	—	—	DATE 10/

WFC DEMO (II

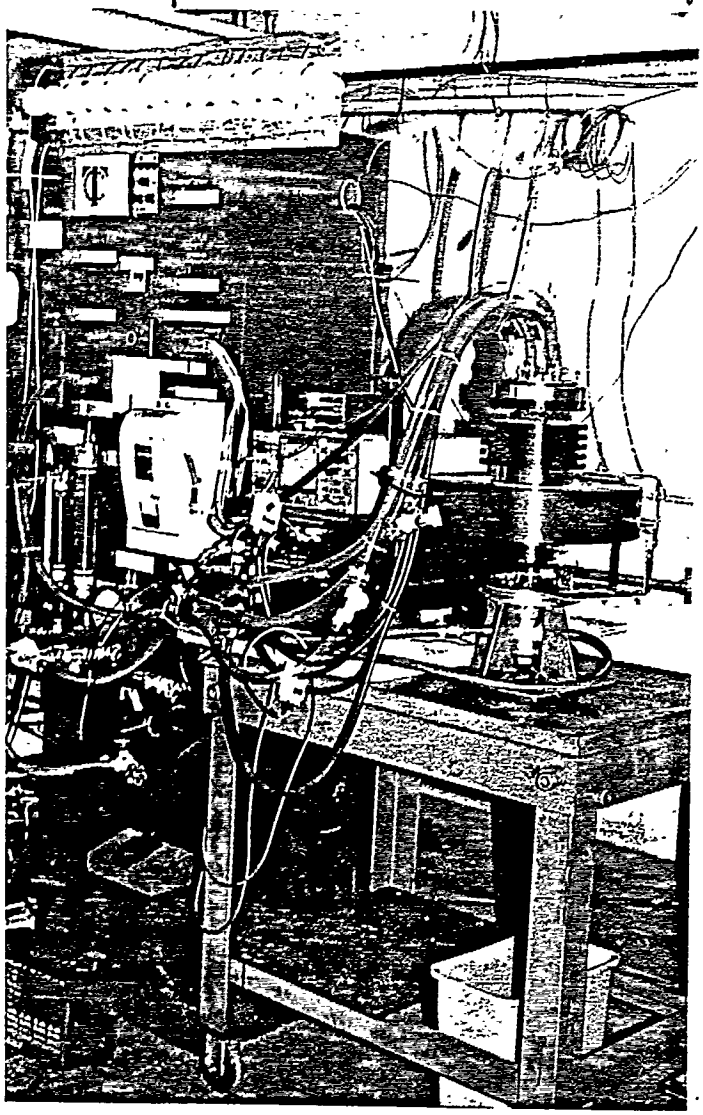

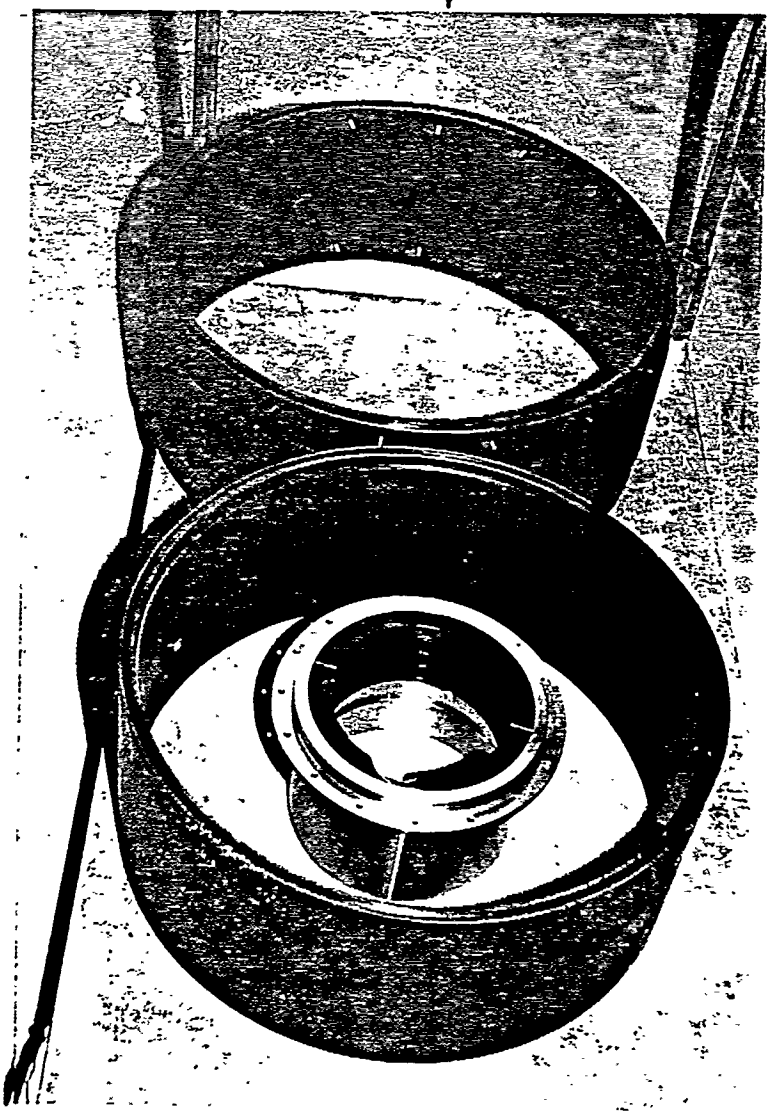

MPUTER
ATA
'STEM

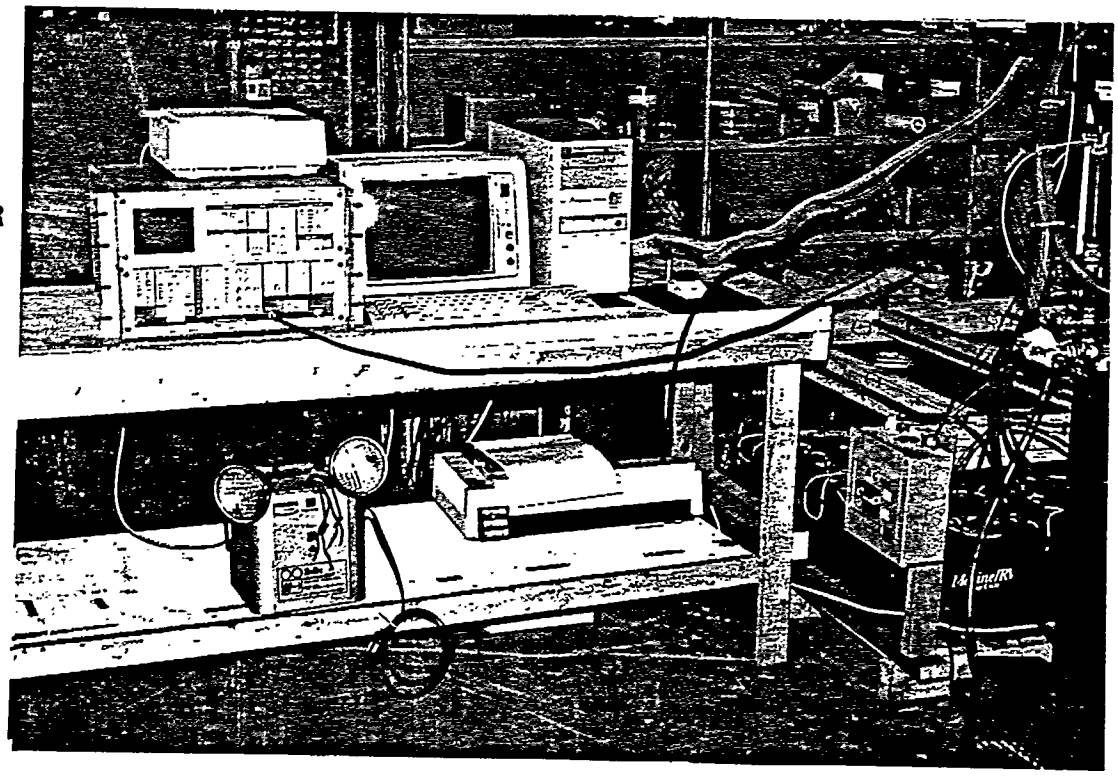

LEAD-ACID
BATTERY
PACK

ROTOR INSTALLED IN LOWER VACUUM ENCLOSURE ASSEMBLY
WITH CLAMP HALVES

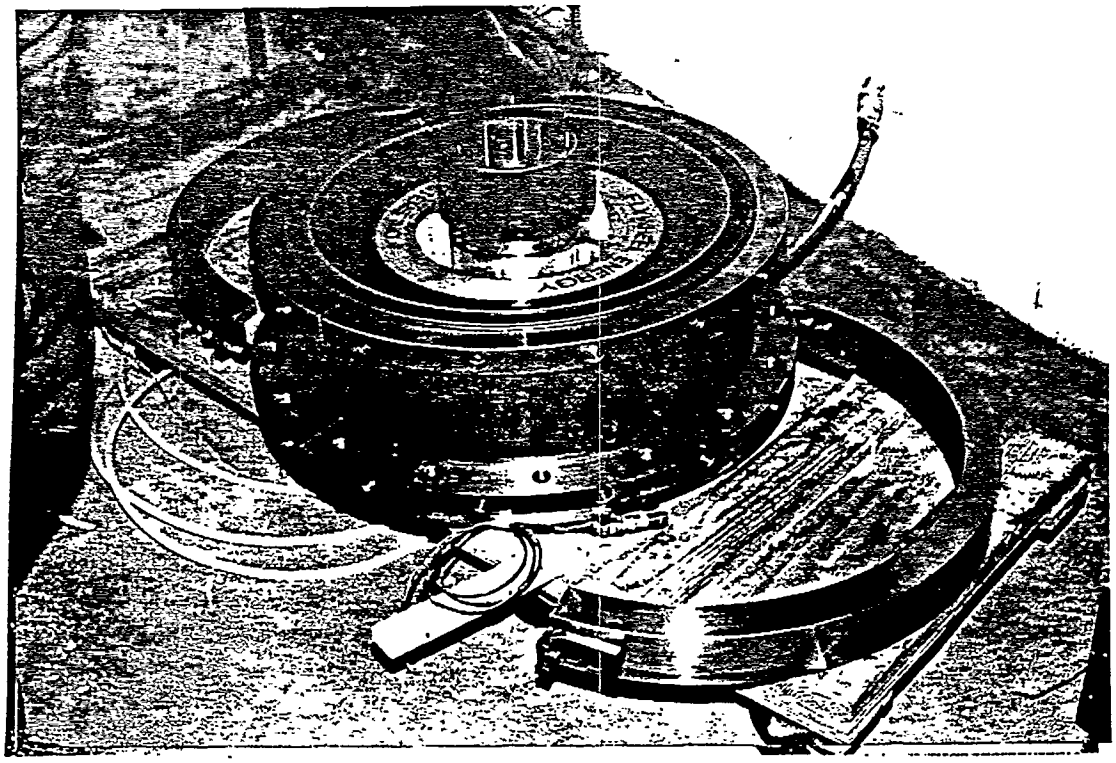

CLAM-SHELL FITTED OVER FINNED ROTOR COOLING SLEEVE

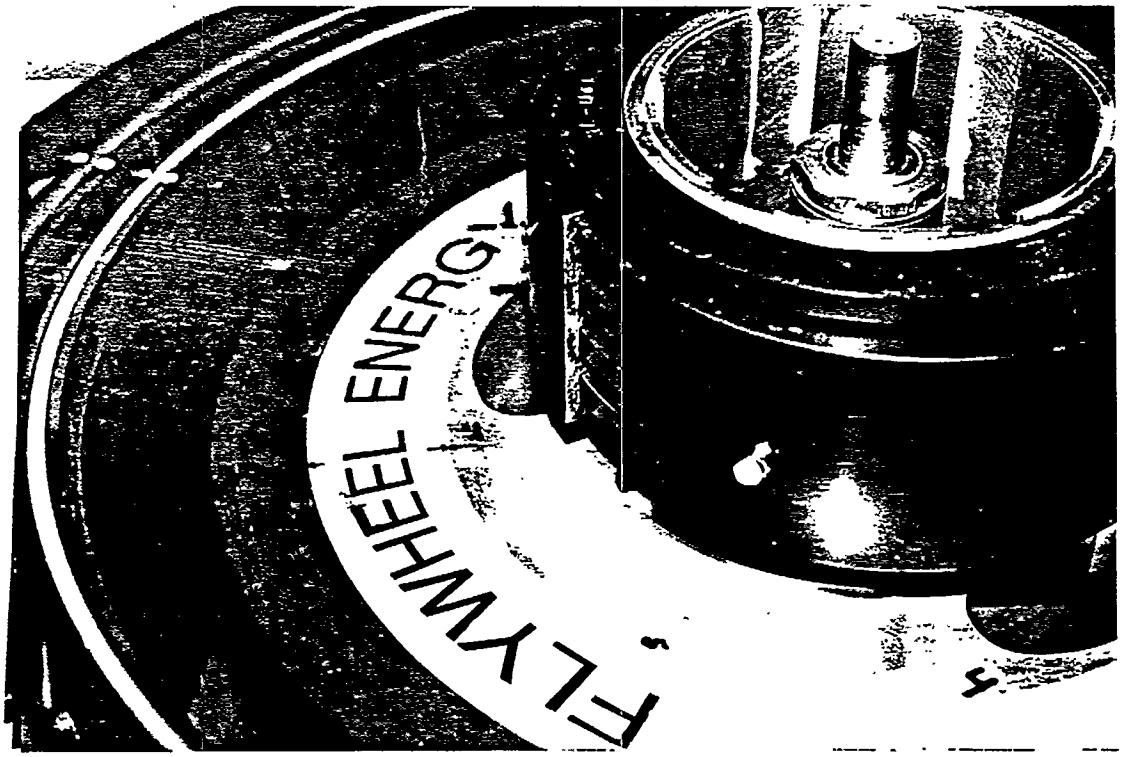

VACUUM ENCLOSURE TOP
WITH THERMOCOUPLE GAGE

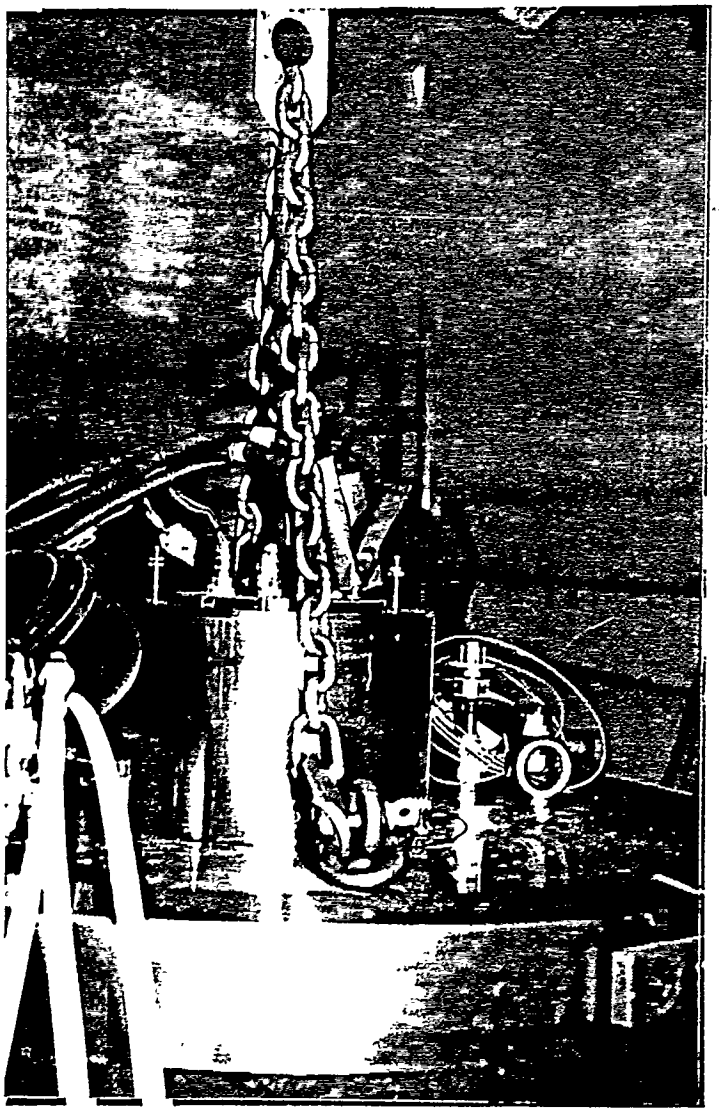

VACUUM ENCLOSURE
SUSPENDED ON EXTENSION SPRINGS

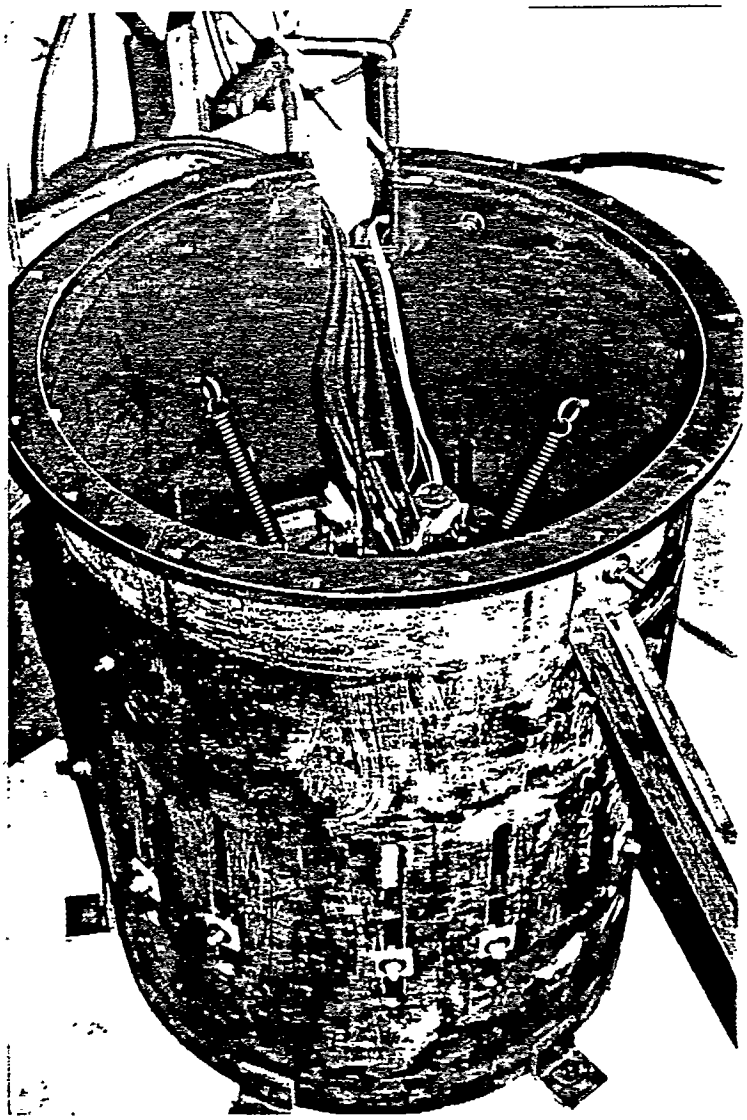

ASSEMBLED INTEGRATED DEMONSTRATION UNIT READY FOR TESTING

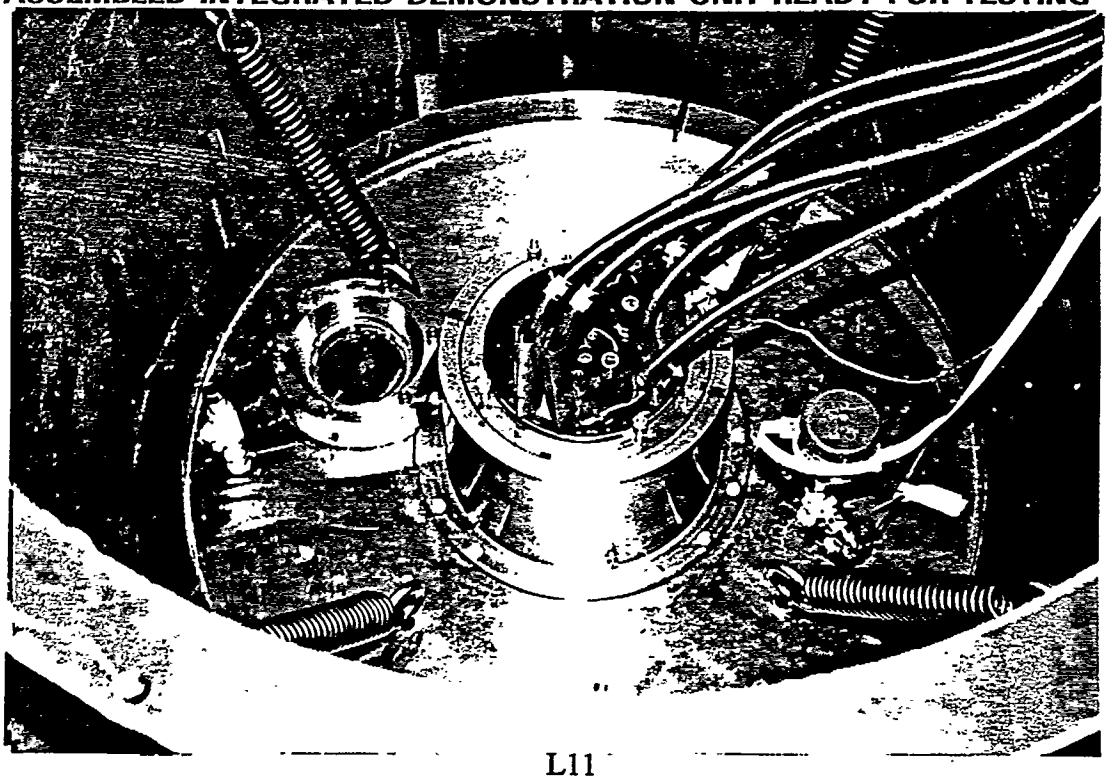

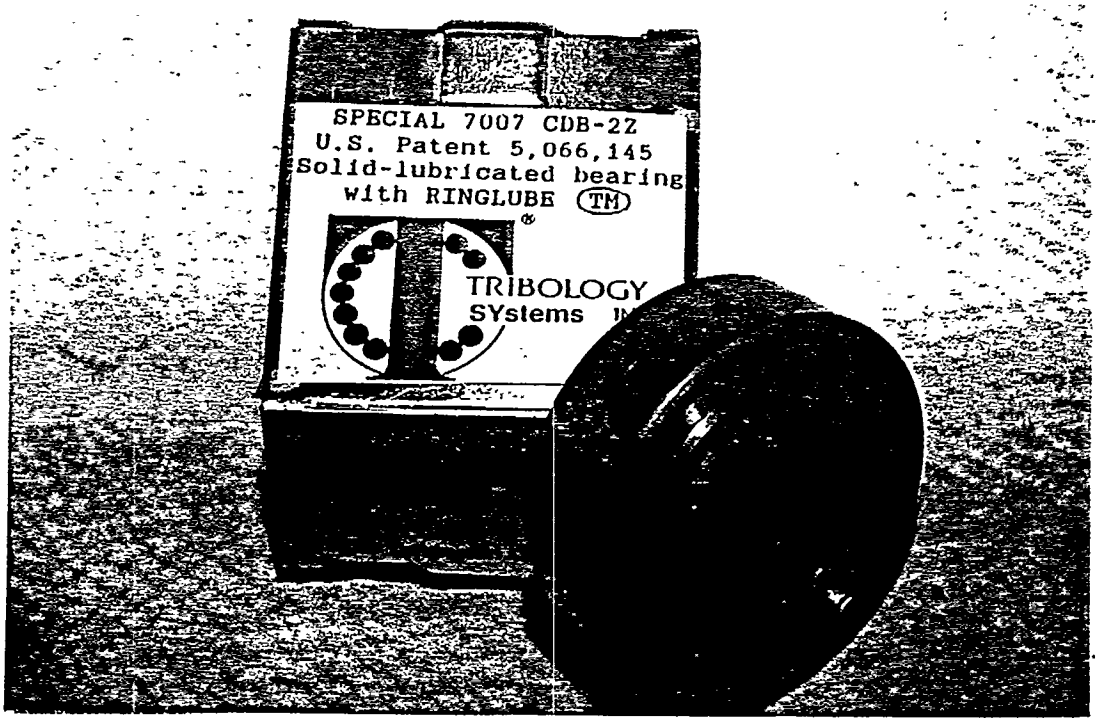

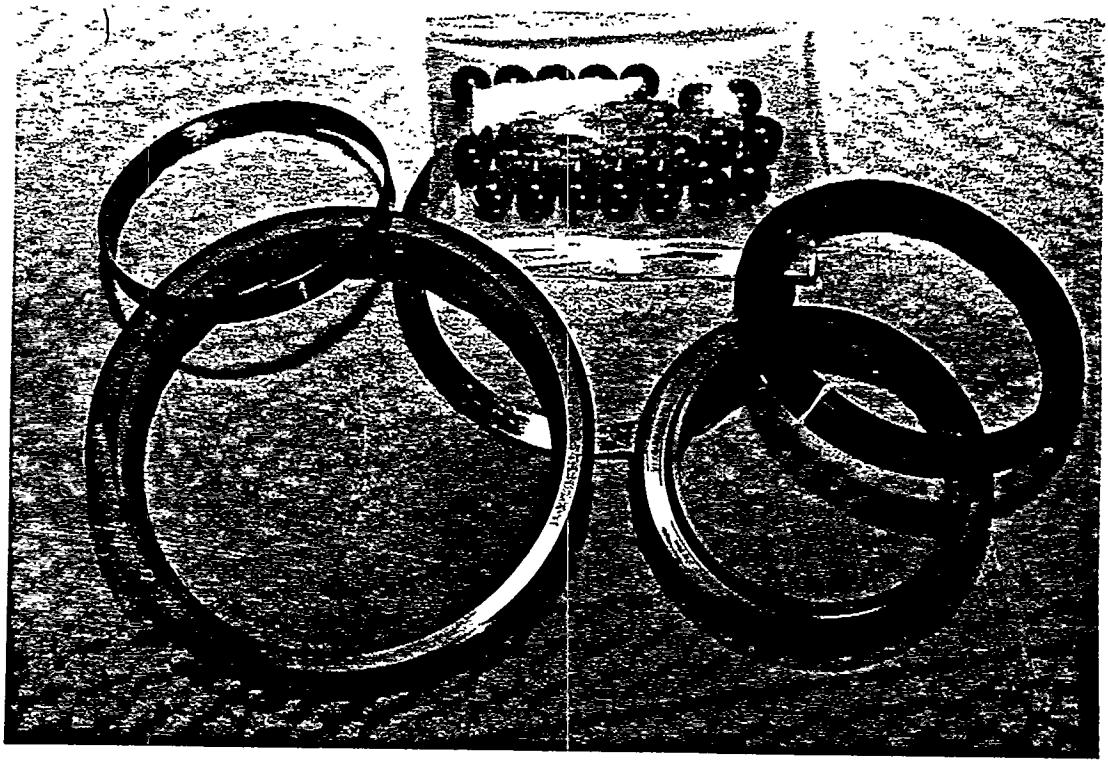

PROTOTYPE SOLID-LUBE SELF-CONTAINED HYBRID-CERAMIC 35-MM BORE BALL BEARING DELIVERED IN SEPTEMBER 1993 TO UTRC WITHIN SIX WEEKS OF THEIR P.O. AWARDED COMPETITIVELY TO TSI FOR TEST IN A VACUUM UNDER HIGH ACCELERATIONS TO 35,000 RPM AT HIGH IMPACT LOADS UP TO 1600 LBS

SOLID-LUBE BEARING FRICTION LOSS AND LONG-LIFE TEST RESULTS

- Empirical estimate of friction loss of 17-mm bore bearings at 100,000 rpm is 5 to 10 watts
- Computed 17-mm bore bearing life in 100,000 rpm FESS is over fifteen years
- Current tests on other projects now show over fifty times standard bearing life for AEROFLOAT (TM) cages

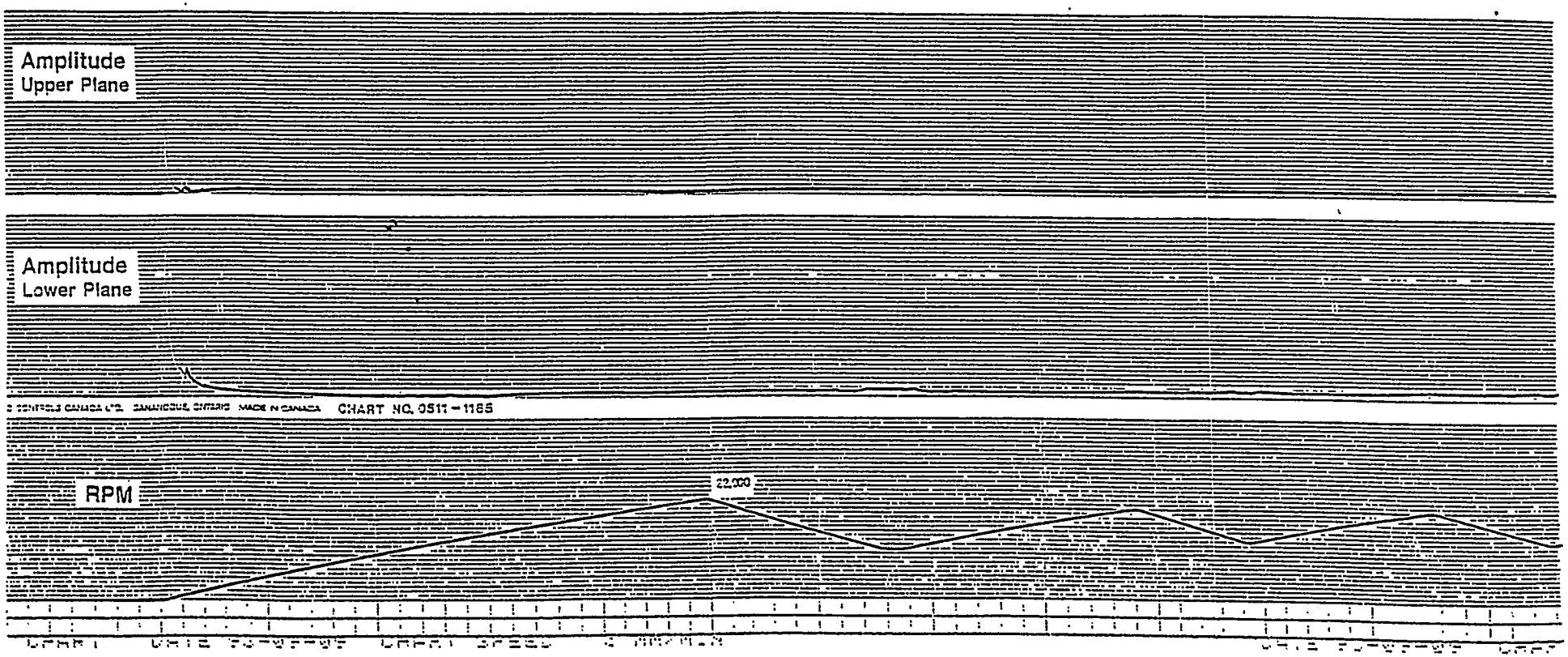

Low Vibration Amplitude of the WFC Pre-Stressed Fiber Reinforced Flywheel up to 700 m/s

5/9/95 10,320 rpm

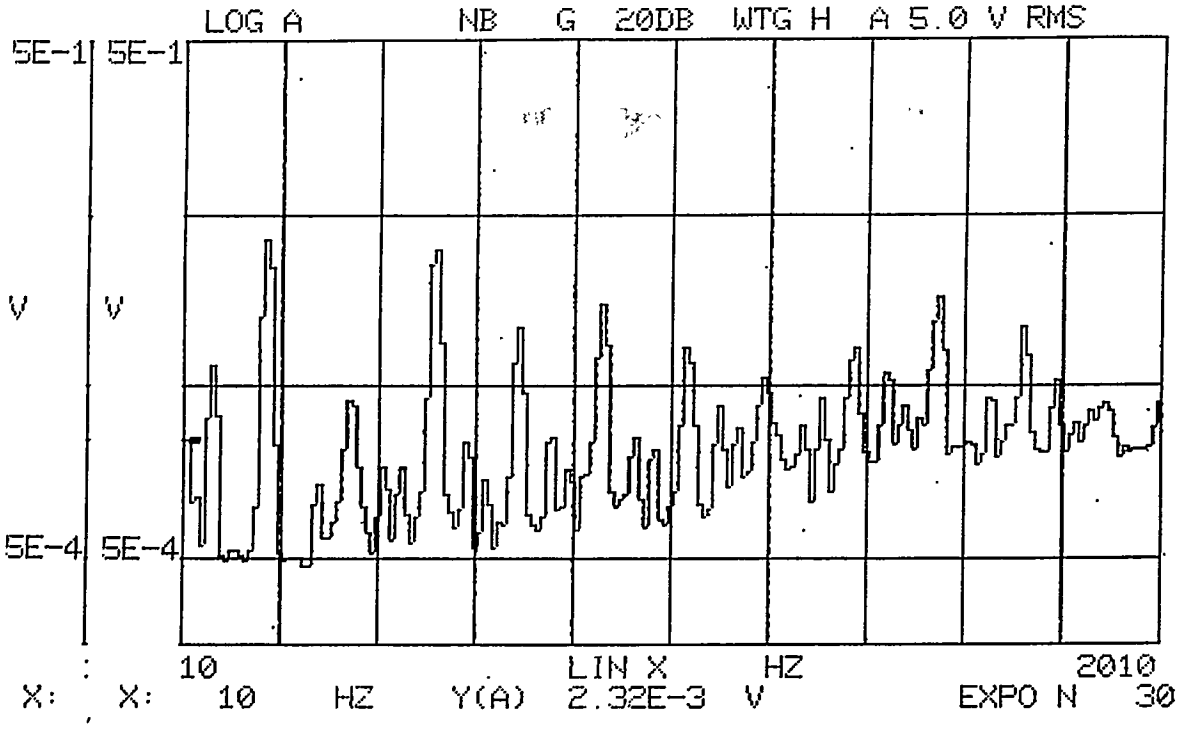

5/9/95 15,500 rpm

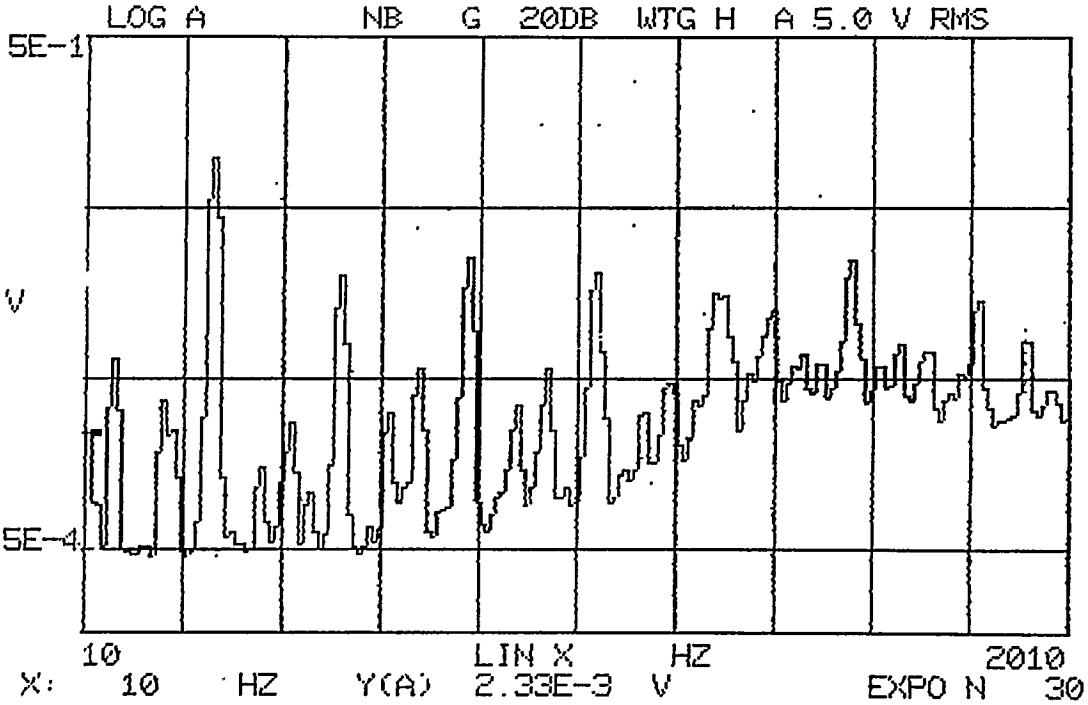

5/9/95 24,110 gm

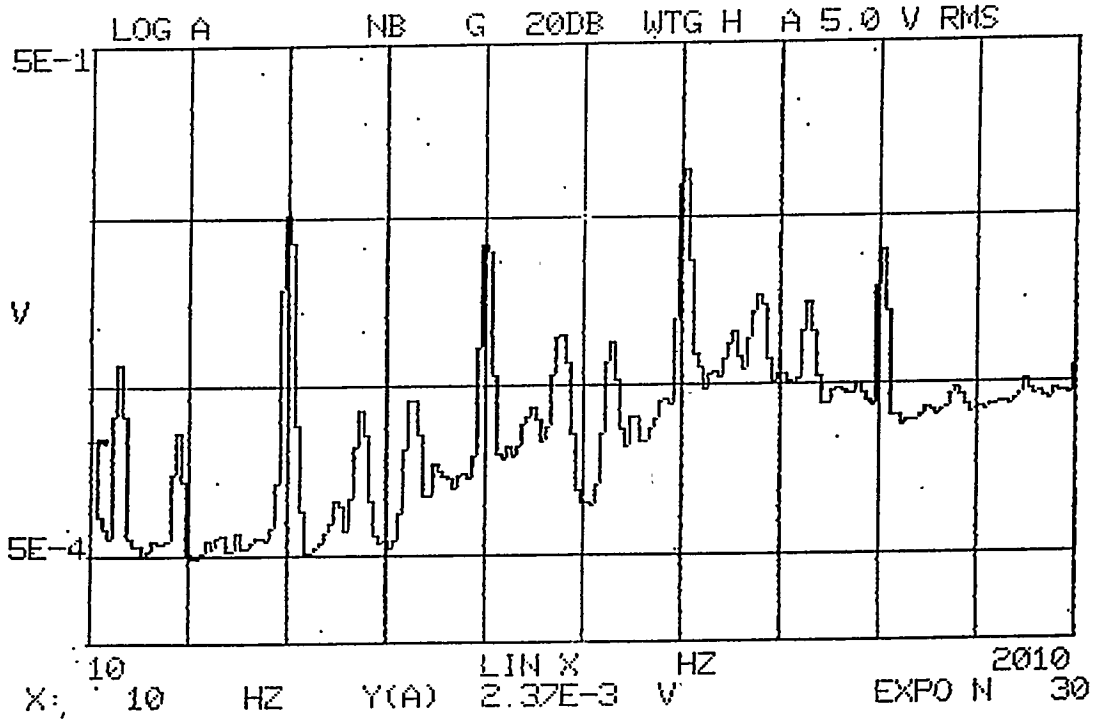

5/9/95 21,880 gm coming down

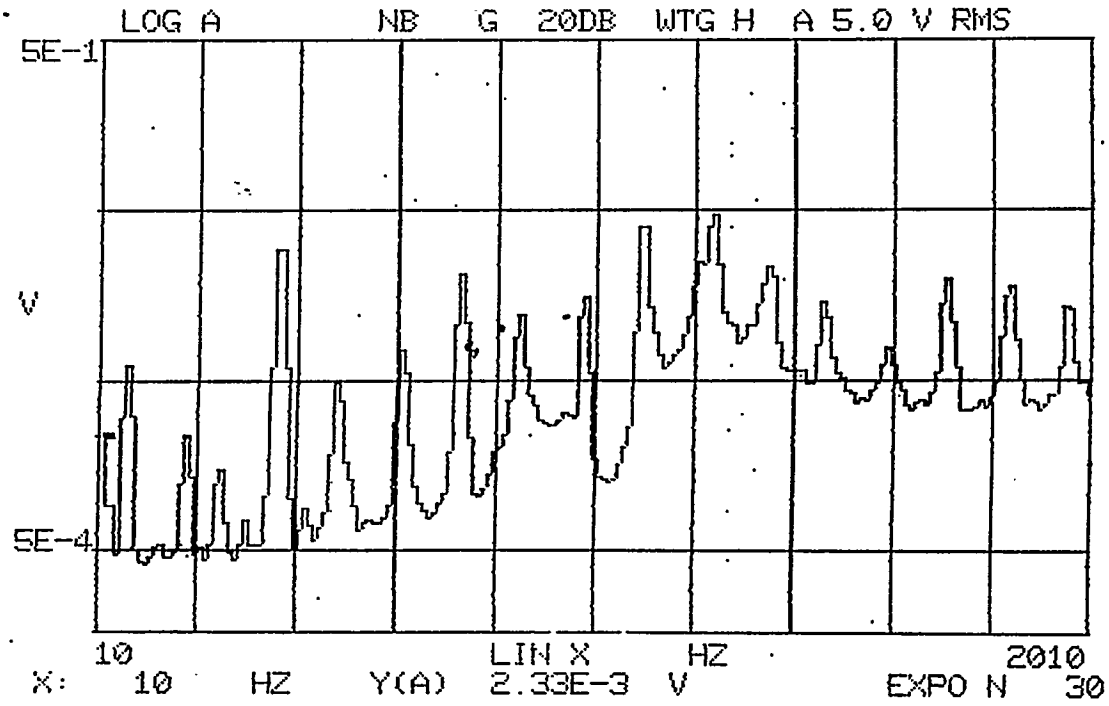

Projected Flywheel Battery (Electromechanical Battery) Characteristics - designed for 100,000 charge/discharge cycles

System number	No. 1	No. 2	No. 3	No. 4	No. 5
Energy storage (gross)	0.5 kWh	2.0 kWh	15 kWh	15 kWh	50 kWh
Rated Power	40 kW	40 kW	110 kW	10 kW	15 kW
Typical Weight/Volume for the EMB System:					
System weight (kg)	19.3	46.0	269.5	249.5	828.0
(lb)	42.5	101.2	592.9	548.9	1,821.6
System volume (liters)	12	25	175	170	550
(cu. in.)	732	1,526	10,679	10,374	33,564
Typical Cylindrical Geometry:					
Cylinder Diameter (in)	12.0	14.0	24.0	24.0	34.0
Cylinder Length (in)	6.5	9.9	23.6	22.9	37.0
Cylinder Diameter (cm)	30.5	35.6	61.0	61.0	86.4
Cylinder Length (cm)	16.4	25.2	60.0	58.2	93.9
System Performance Perameters:					
Specific Energy (Wh/kg)	25.9	43.5	55.7	60.1	60.4
Energy Density (Wh/l)	41.7	80.0	85.7	88.2	90.9
Specific Power (W/kg)	2,072.5	869.6	408.2	40.1	18.1
Power Density (W/l)	3,333.3	1,600.0	628.6	58.8	27.3

TRIBOLOGY SYstems INC

WORLD FLYWHEEL'S BASIC SYSTEM IS A HIGHLY ENGINEERED, VERY SIMPLE, FAIL-SAFE DESIGN

- Samples of thorough finite element analyses of both the motor rotor and flywheel rings
- Complete rotor analysis as in a critical speed map for vibration decoupling design
- Motor voltage saturation at maximum design speed makes impossible any overspeed
- Temperature, vibration, torque and vacuum sensors trigger alarms and safety systems

World Flywheel Consortium, Inc.

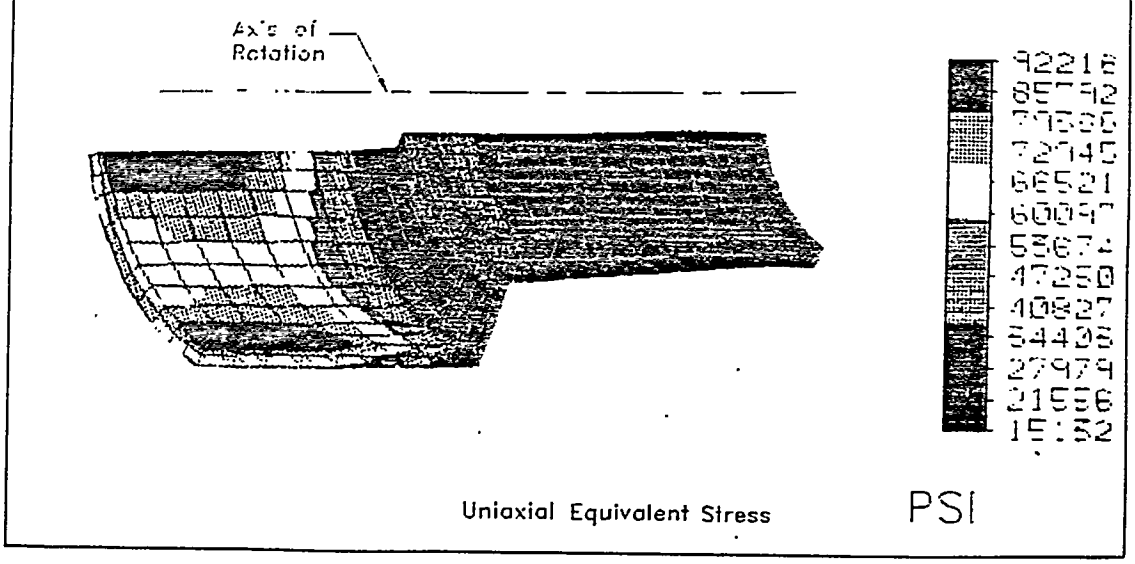

FEA of 3-D Rotor Section
With Magnets, Rotating at 30,000 RPM

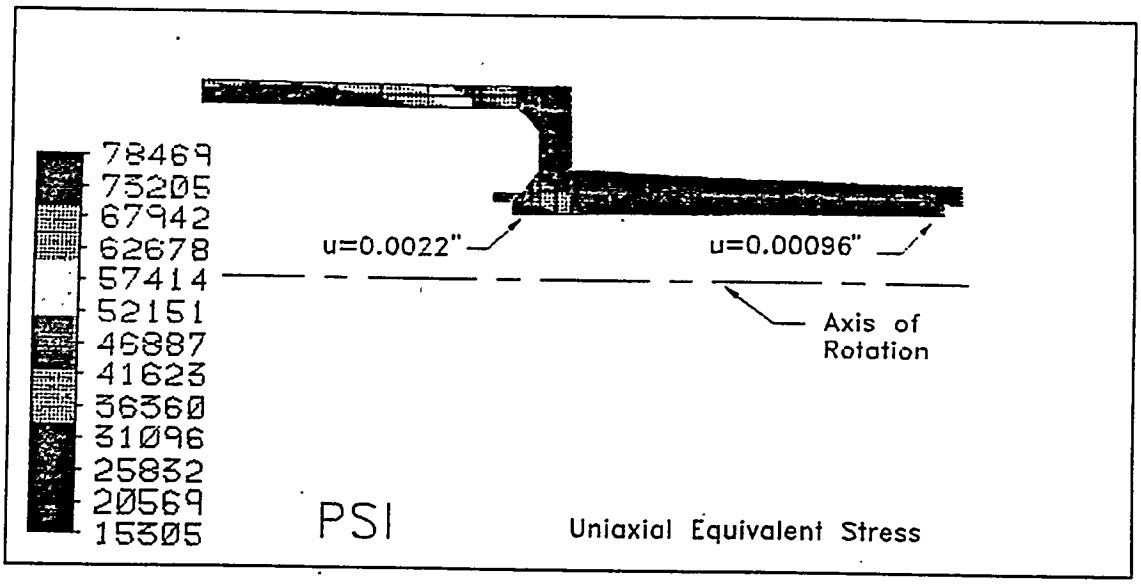

FEA of Axisymmetric Rotor
With Magnets, Rotating at 30,000 RPM

by

Michael S. DeBruzzi

PHOTOVOLTAIC/FLYWHEEL LIGHTSTATION SYSTEM DESIGN AND PROTOTYPE ROTOR TESTS

R.C. Flanagan

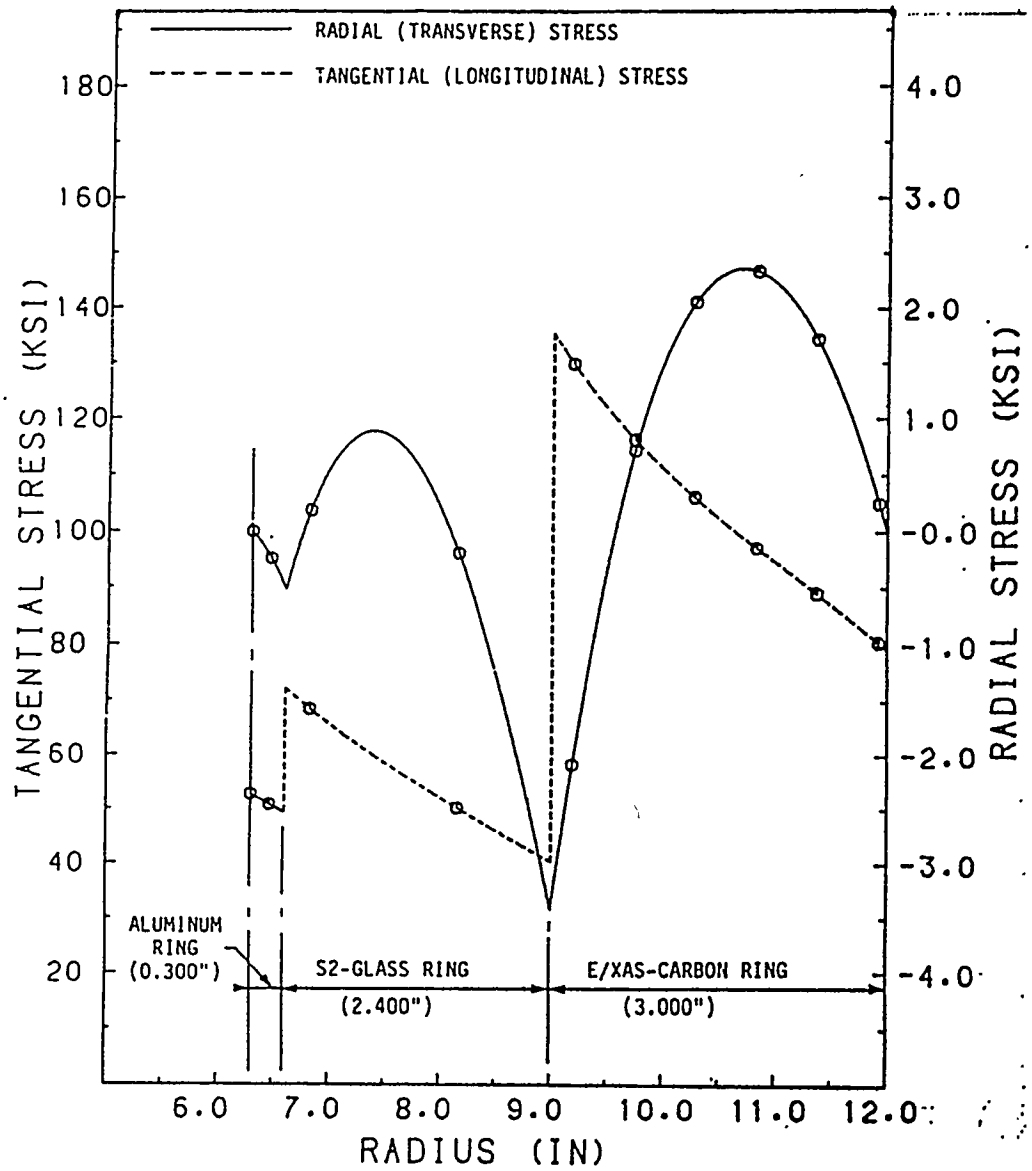

Fig. 3: Stress profile of the lightstation rotor at design speed of 23,000 rpm.

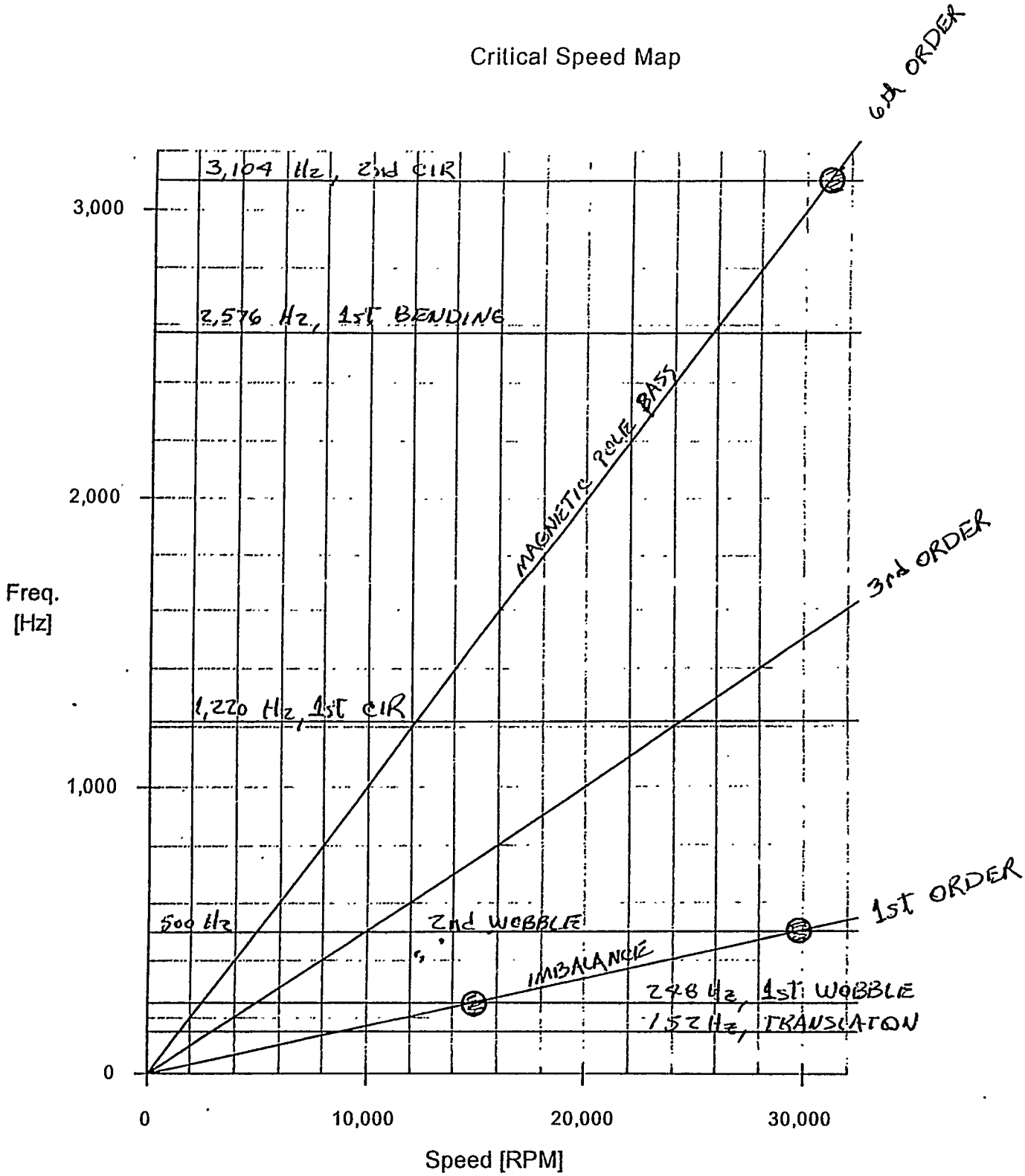
Critical Speed Map
3,104 Hz, 2nd CIR
2,576 Hz, 1st BENDING
1,220 Hz, 1st CIR
500 Hz
2nd WOBBLE
IMBALANCE
248 Hz, 1st WOBBLE
152 Hz, TRANSLATION
MAGNETIC POLE PASS
6th ORDER
3rd ORDER
1st ORDER
3,000
2,000
1,000
0
Freq. [Hz]
0
10,000
20,000
30,000
Speed [RPM]

TRIBOLOGY SYstems INC

SAFETY CONTAINMENT SYSTEMS CONSIST OF A SERIES OF REDUNDANT FEATURES CAREFULLY ENGINEERED TO BALANCE THE FLYWHEEL ENERGY DISSIPATION IN A COMPLETELY BENIGN WAY

- Based on previous containment development at ORNL, LLNL, GE and Avco, attached
- All stationary containment system issues now resolved by successful rotor burst test
- Basic containment design confirmed by demonstration unit testing, including disc brake
- Centrifugally-induced stresses from rotor burst or flywheel disintegration computed never to exceed the capacity of robust stationary containment vessel, according to the widely-accepted test-proven ASME pressure-vessel code

World Flywheel Consortium, Inc.

Anthony P. Coppa
General Electric Company

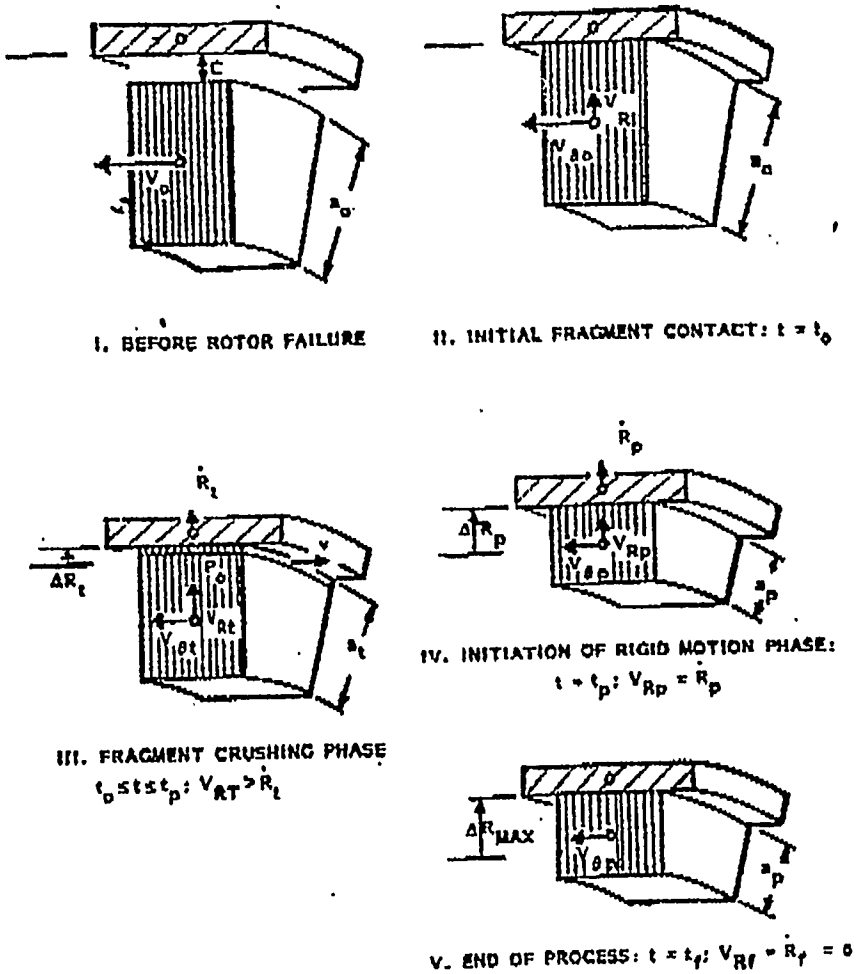

Phases of Fragment Crushing Process

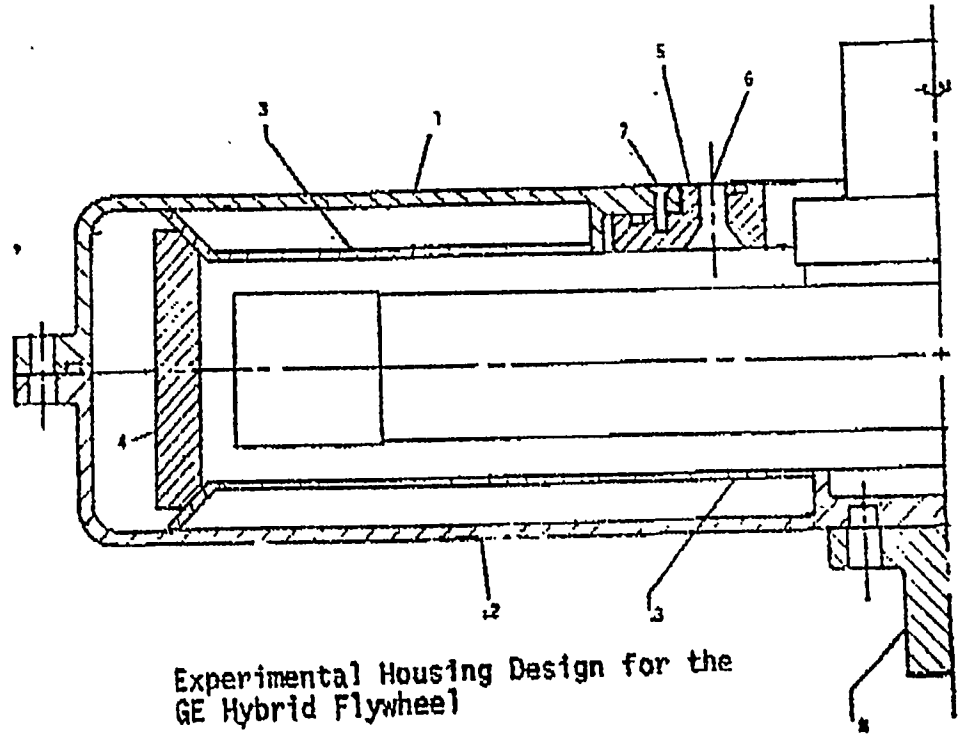

Experimental Housing Design for the GE Hybrid Flywheel

Alan D. Sapowith
William E. Handy
Avco Systems Division

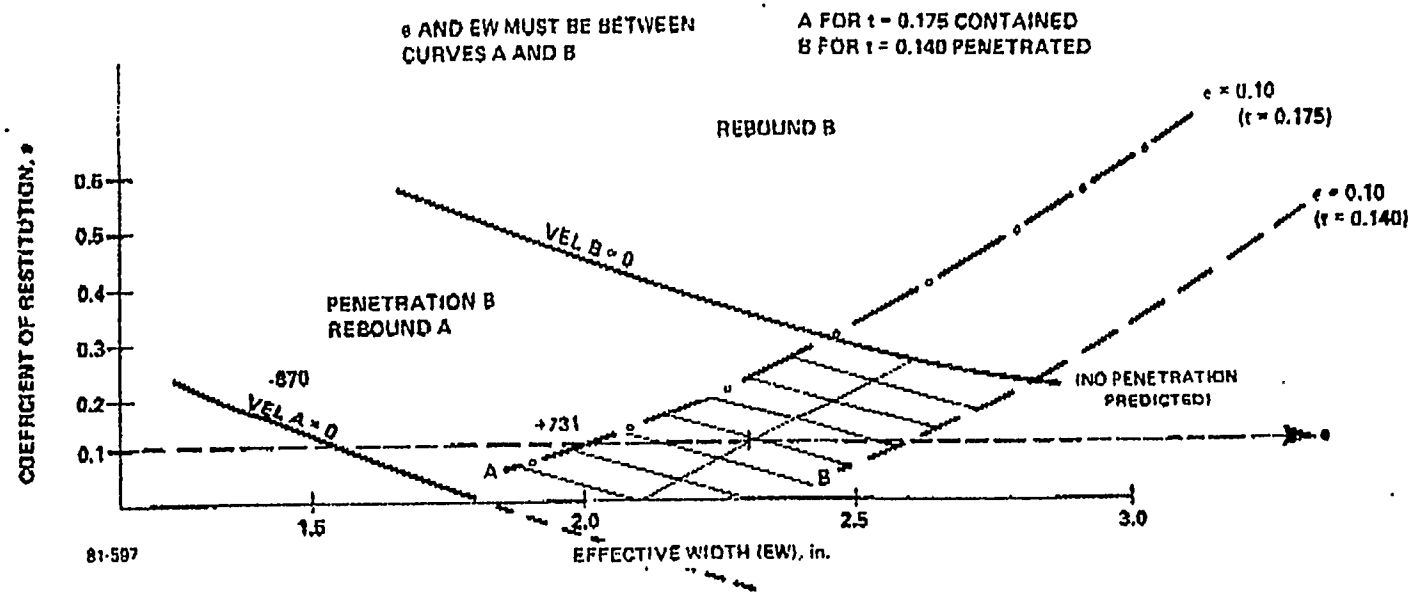

Fig. 2. Fiberglass on Steel Coefficient of Restitution and Effective Width.

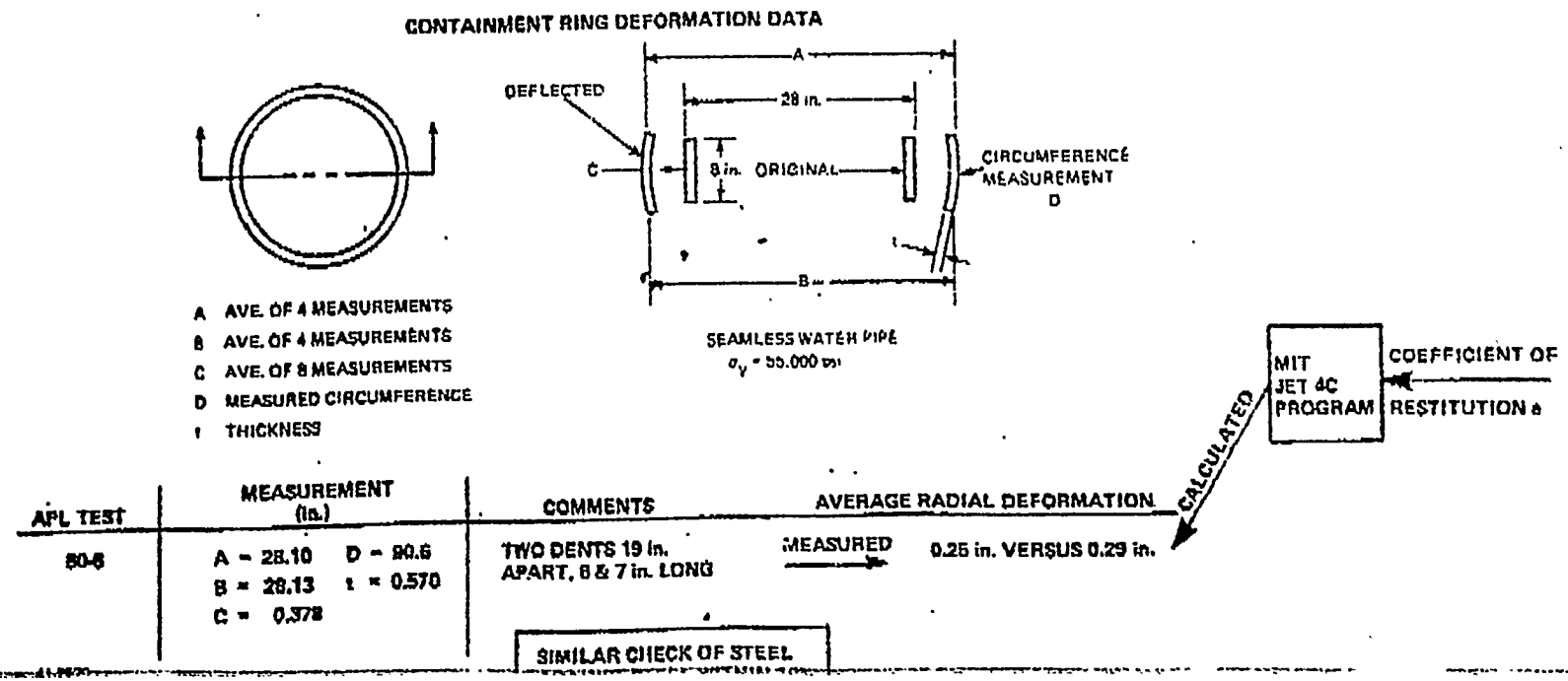

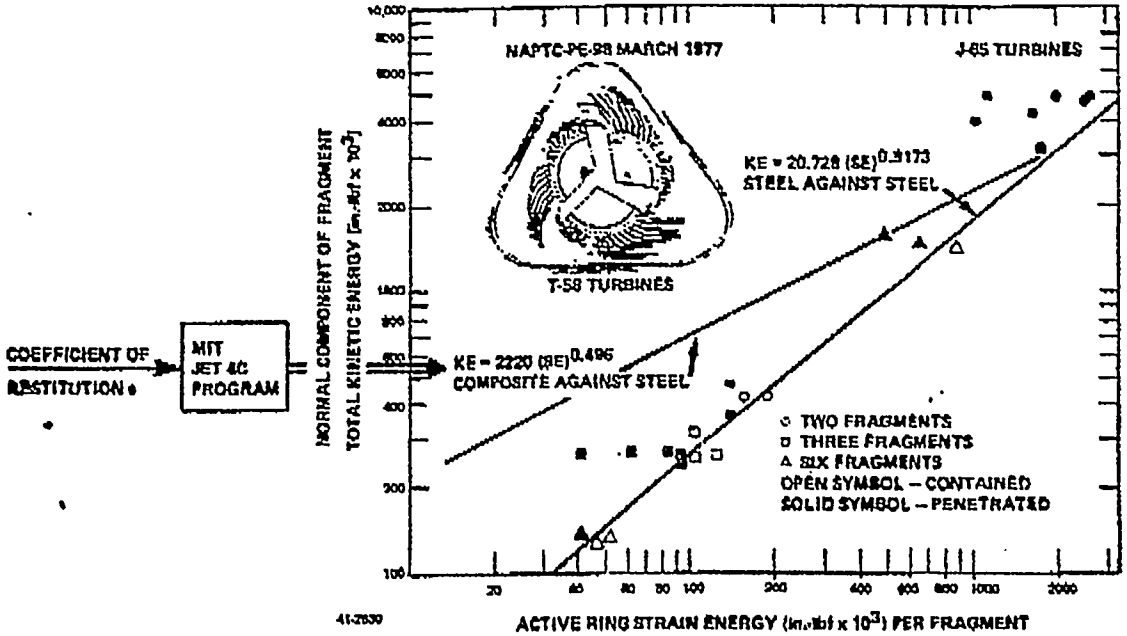

Fig. 4. Kinetic Energy Function Composite Against Steel and Steel Against Steel.

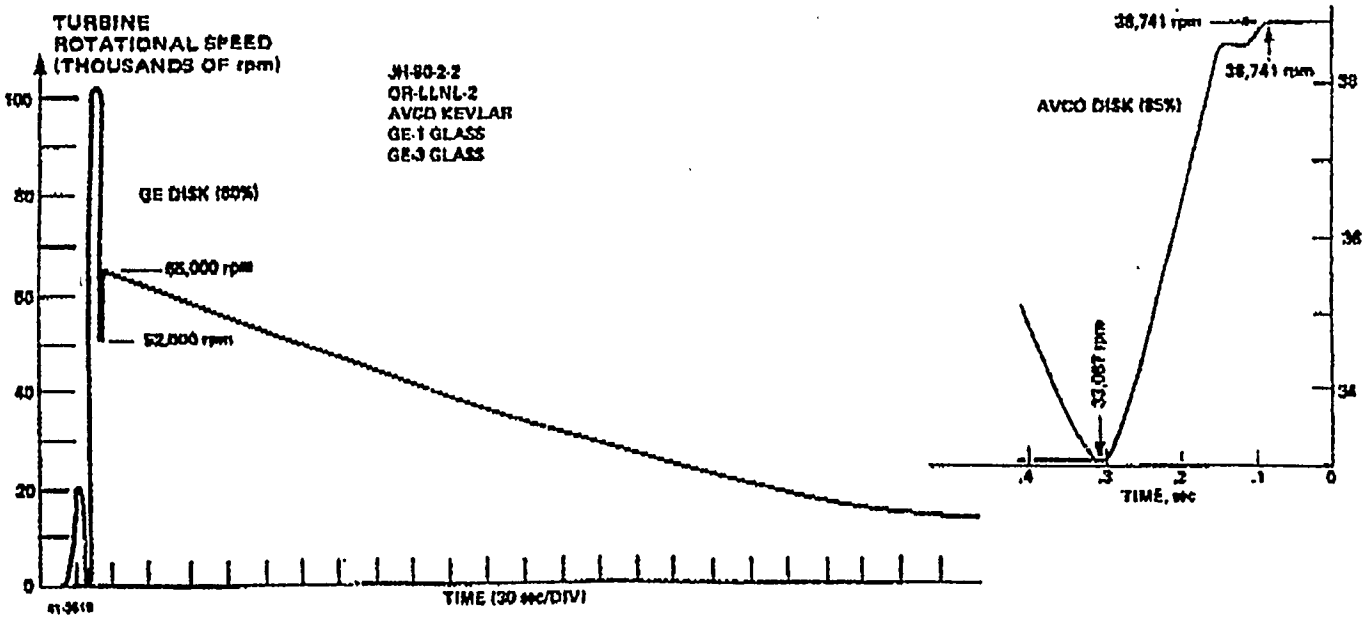

Fig. 5. Evidence of Slow Growth Failure Mode.

TRUCK DISC-BRAKE FAIL-SAFE ASSEMBLY

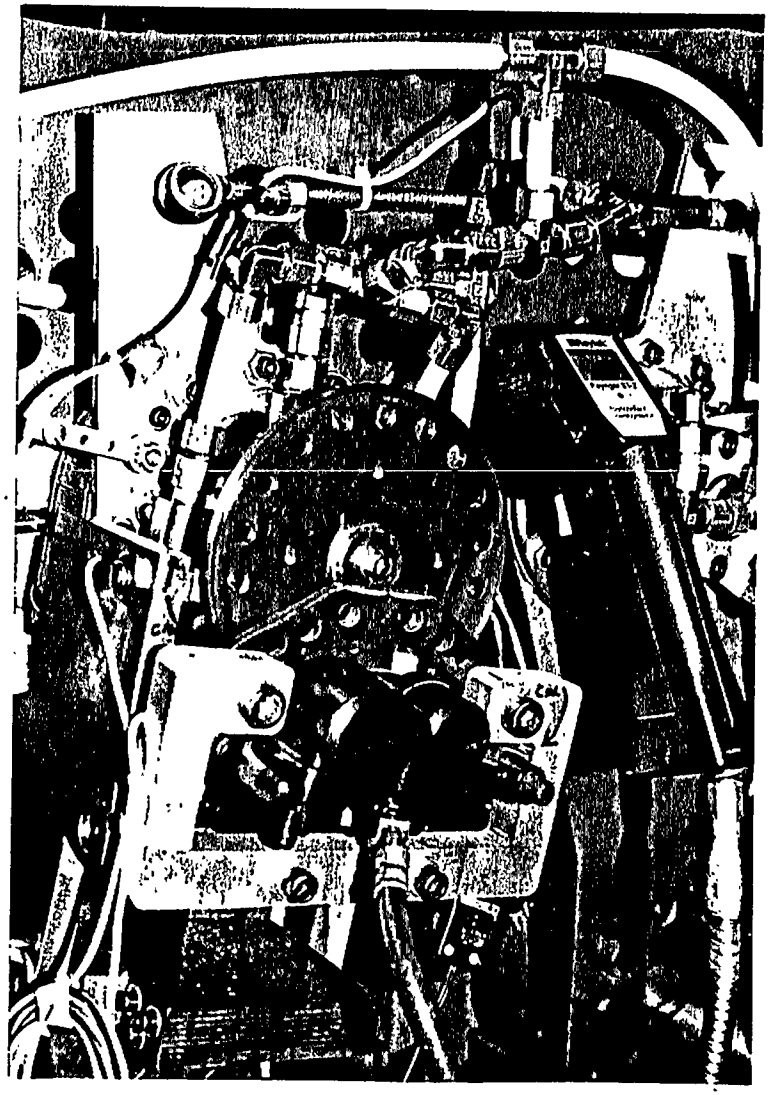

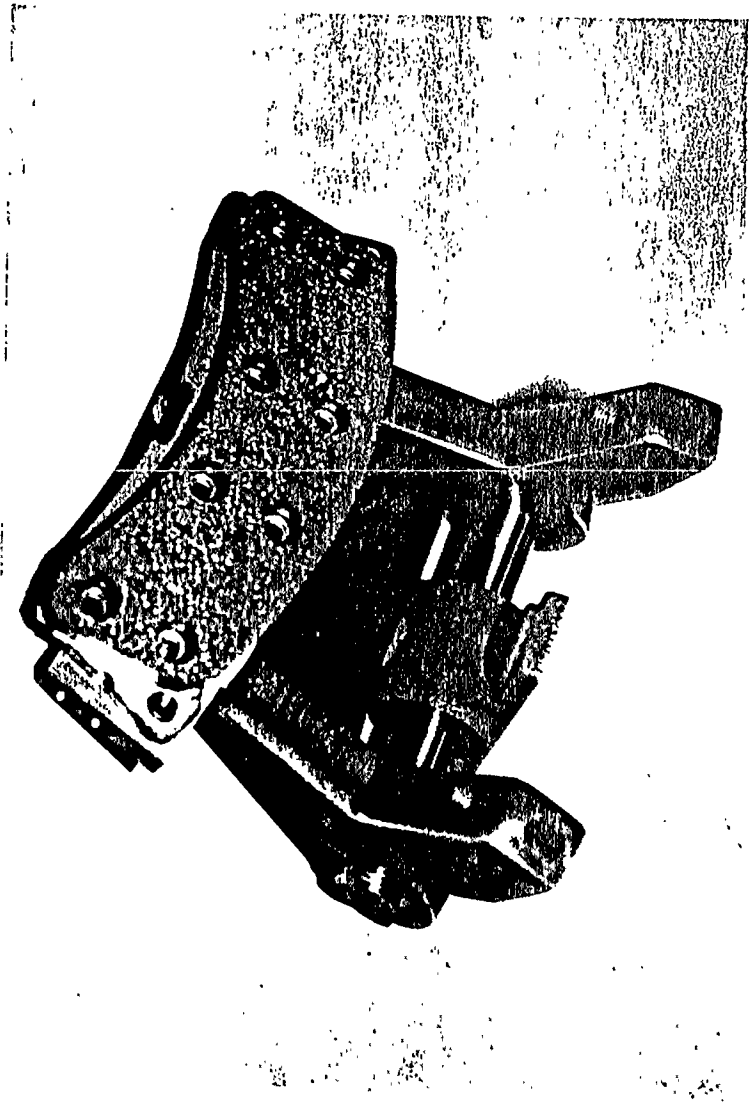

TRIBOLOGY SYstems INC

COMPLETE UNIT DESIGNS FOR STATIONARY FLYWHEEL APPLICATIONS ARE NOW COMMERCIALLY AVAILABLE

- All system designs verified by successful testing of demo unit since first of the year

- Four commercially available flywheel unit sizes based on near copies of demo unit:

  1. 40 kW power, 500 Wh energy storage, floor footprint dimension (x) = 20"
  2. 10 kW power, 2 kWh energy storage, floor footprint dimension (x) = 30"
  3. 150 kW power, 500 Wh energy storage, floor footprint dimension (x) = 20"
  4. 150 kW power, 2.5 kWh energy storage, floor footprint dimension (x) = 35"

World Flywheel Consortium, Inc.

TRIBOLOGY SYstems INC

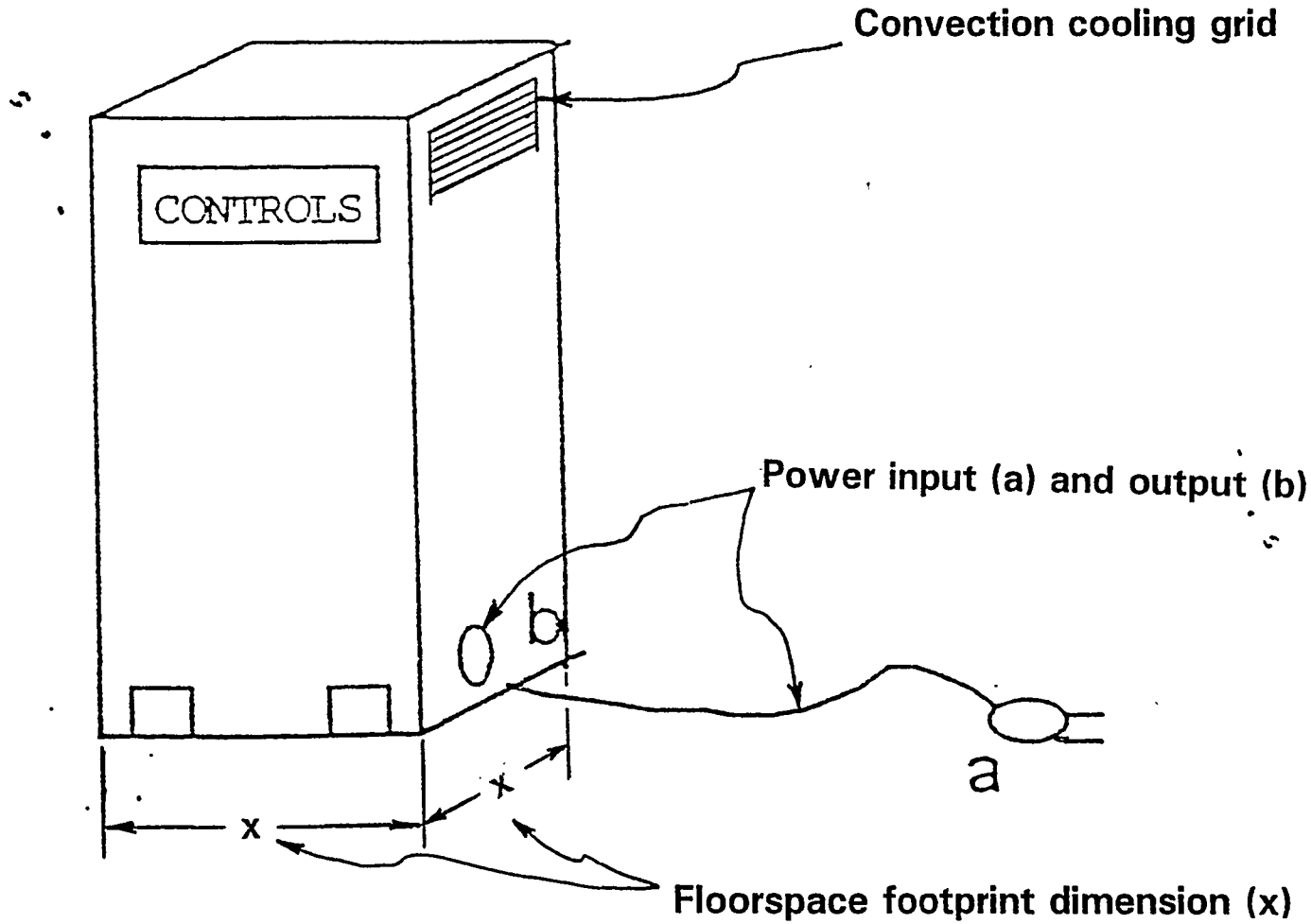

World Flywheel Consortium, Inc.

HIGH POWER DENSITY AND HIGH EFFICIENCY ELECTRO-MECHANICAL CONVERSION SYSTEM FOR FLYWHEEL ENERGY STORAGE APPLICATIONS

PRESENTED BY DR. HAO HUANG

SL-MONTEVIDEO TECHNOLOGY, INC.,
WORLD FLYWHEEL CONSORTIUM

MONTEVIDEO, MN 56265

612-269-6515 (O)
612-269-7662 (F)

HIGH SPEED HIGH EFFICIENCY MOTOR DESIGNS

- Design Optimization To Arrive Dimensions With Minimum Weight Subjected To Performance Requirements

- Constrained Nonlinear Programming Plus An Accurate Motor Design Model To Achieve Optimum Design

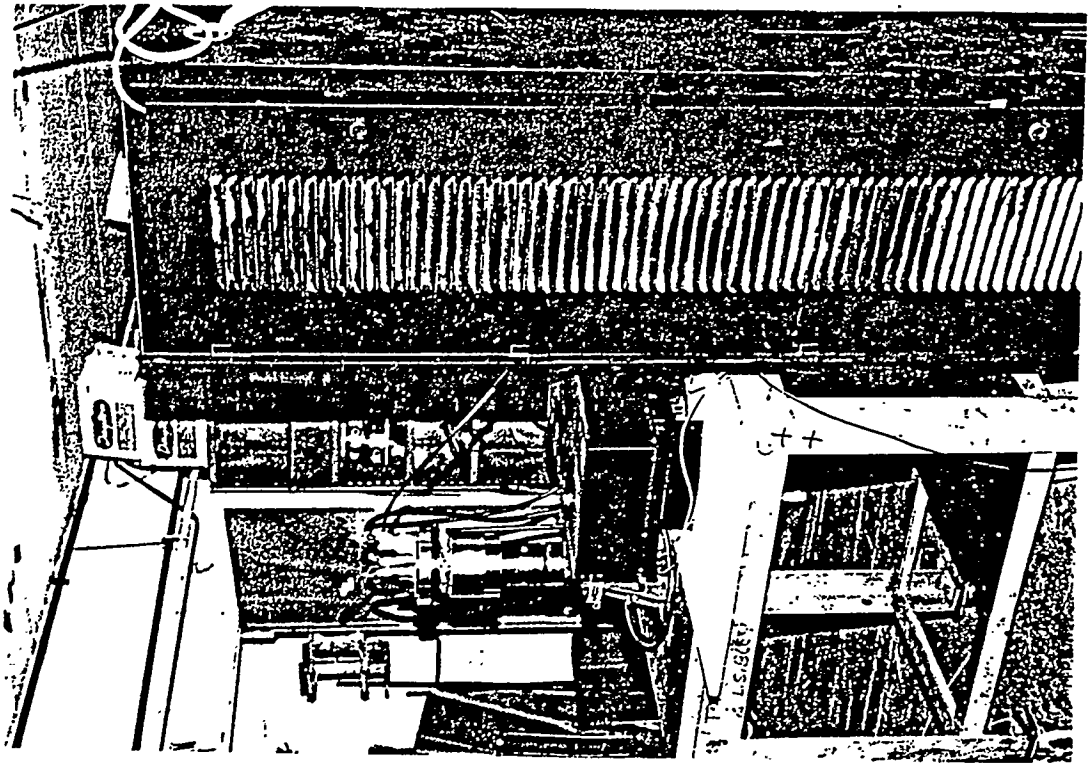

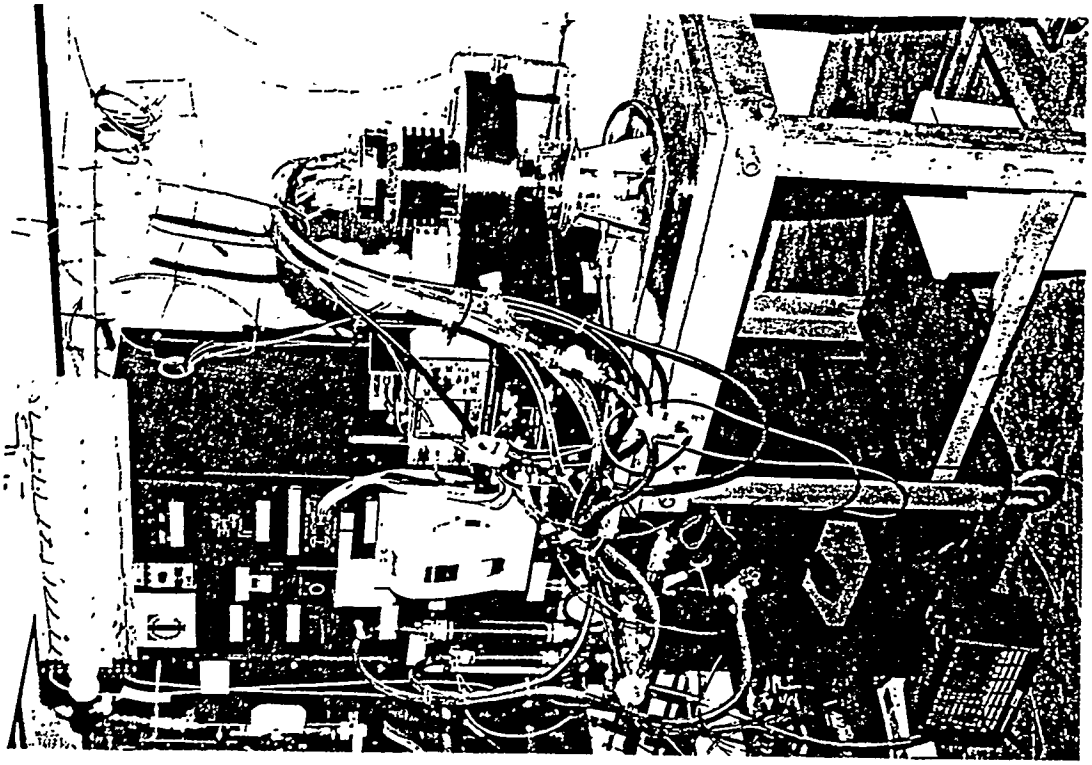

- **Flywheel Motor Resulted From The Optimization Method**

  - **30,000 RPM**
  - **40 Kw**
  - **96% Efficiency**
  - **No Rotor Over Heating Problem**
  - **12 LBS Electro - Electro - Magnetic Material**
  - **Motor Picture:**

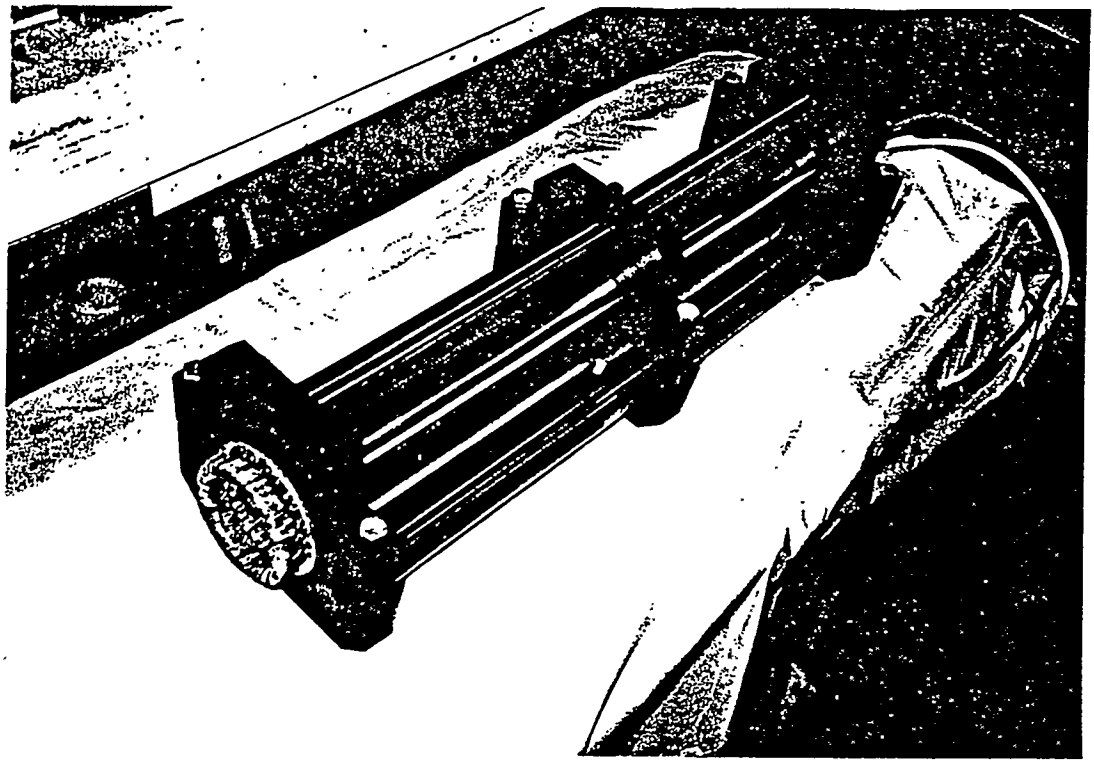

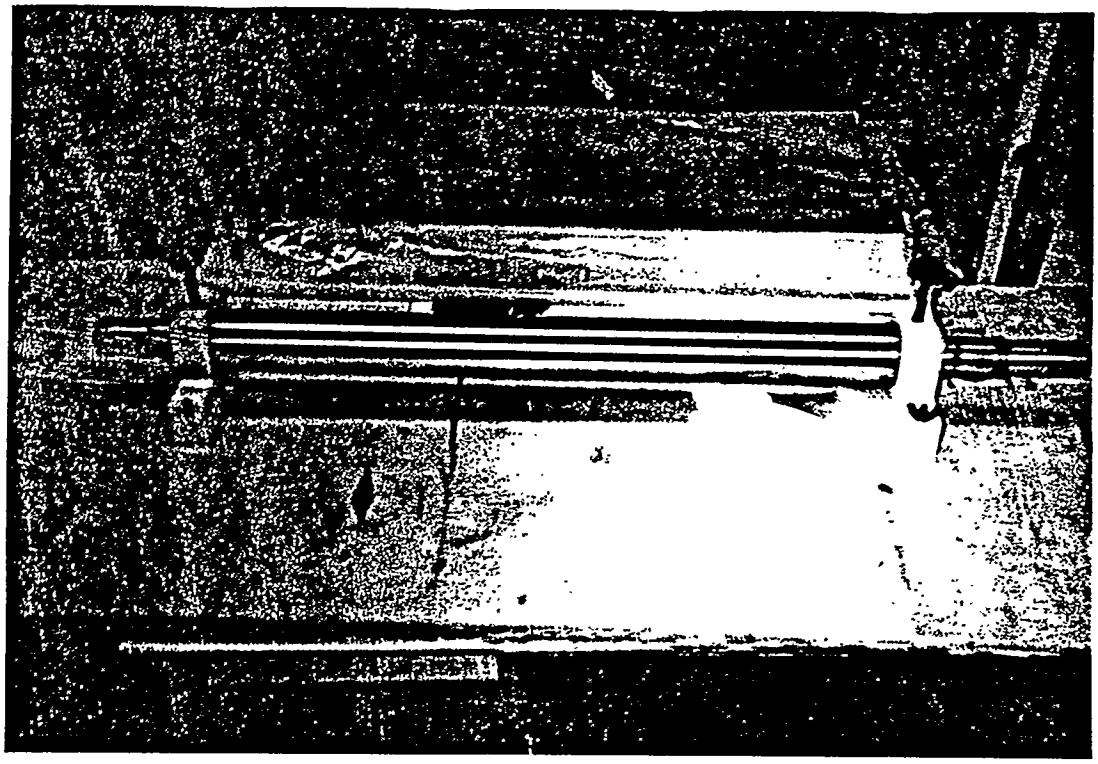

MECHANICAL POSITION SENSOR ELIMINATION

- Mechanical Position Sensors Have Serious Reliability, Assembly And Cost Problems

- Two Commercialized - Ready Solutions Developed BY SL-MTI, WFC

  - Solution 1 — Virtual Hall Sensor (Patented)

  - Solution 2 — Flux Linkage Position Observer (Patent Pending)

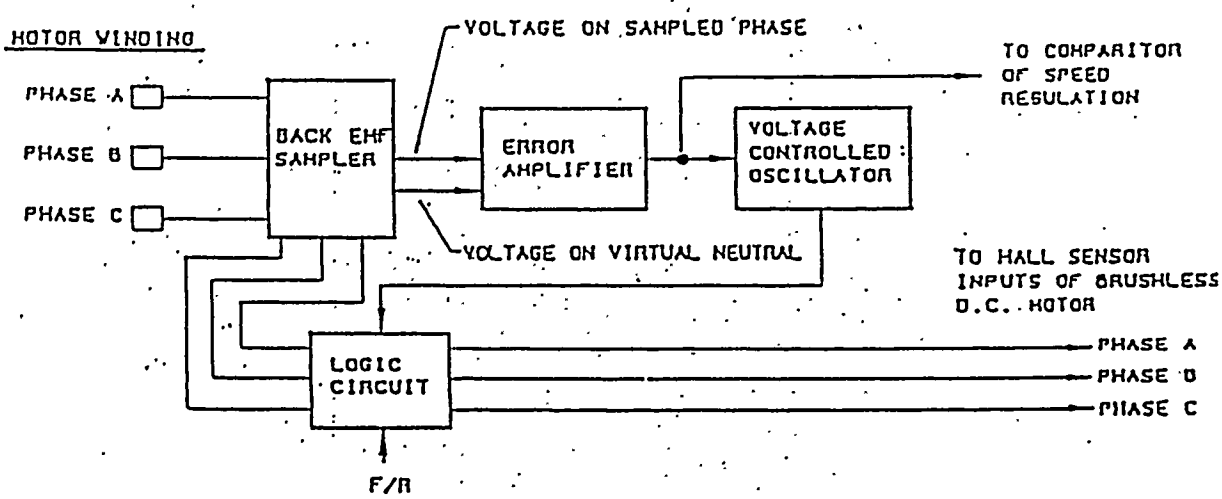

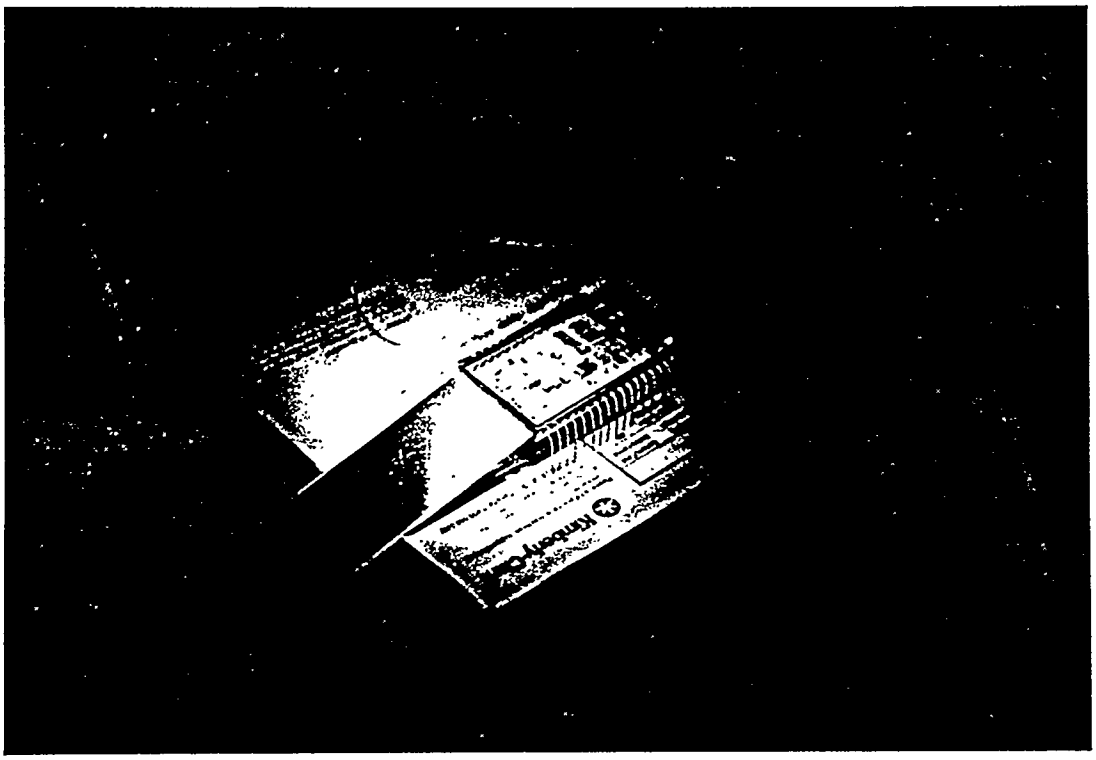

SOLUTION 1

M7

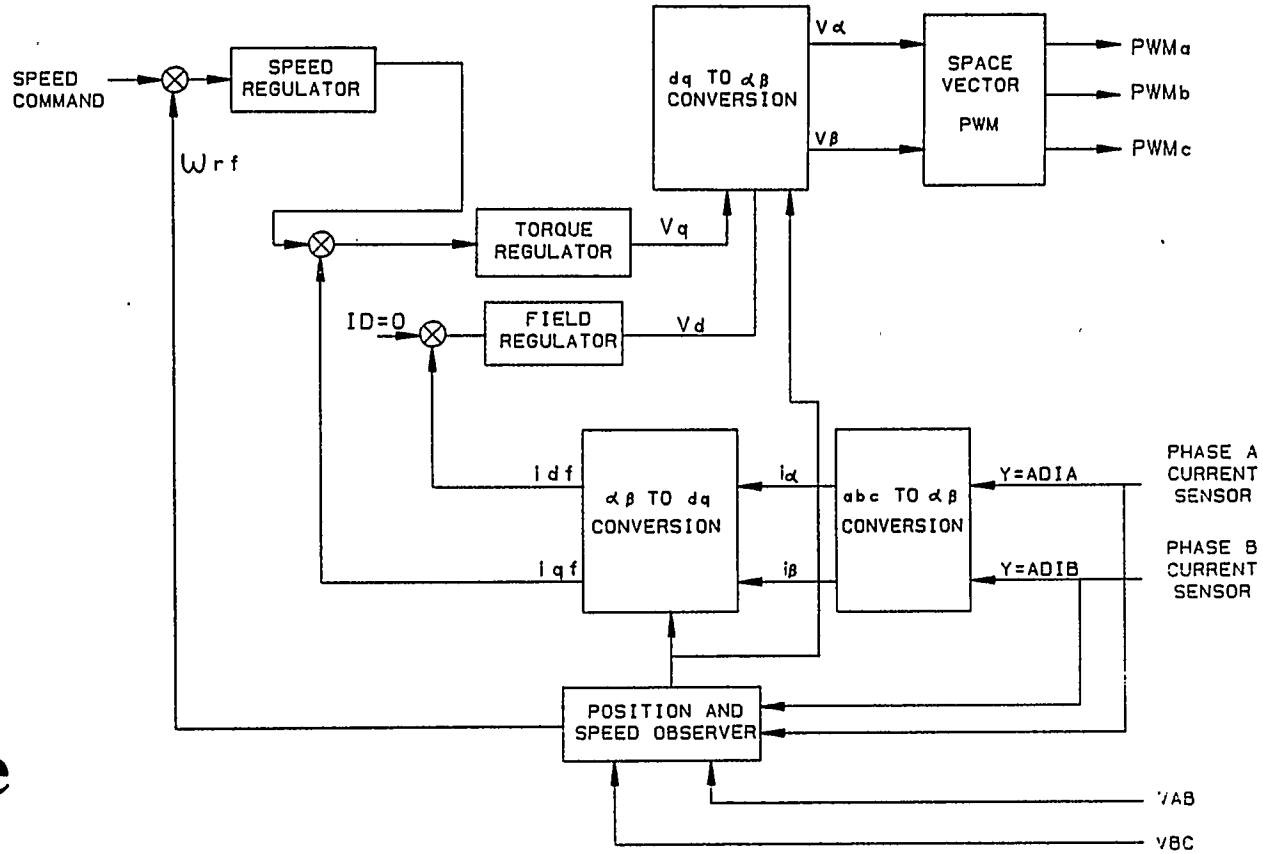

- **Software**
- **No Motor Parameters Requested Except Resistance Per Winding Phase**

SOLUTION 2

HIGH VOLTAGE POWER AMPLIFIER

- Modulated Design For Different Applications
- Four Quadrant Vector Control For Effectiveness Of Power Regeneration
- Space Vector Sine Waveform PWM To Minimize The Iron Losses On Rotor
- Power Factor Maximization At Both Bridges

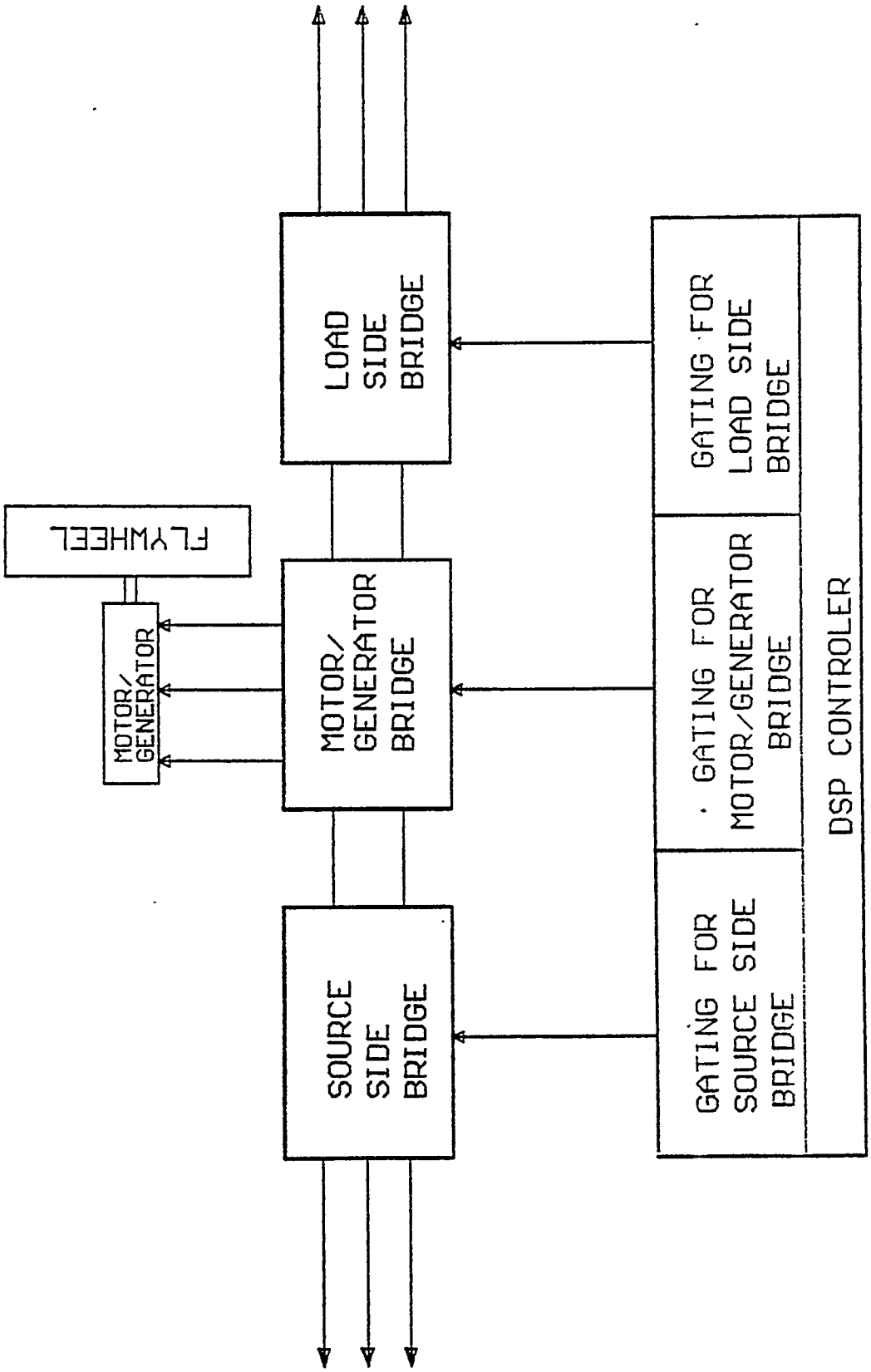
LOAD SIDE BRIDGE
MOTOR/ GENERATOR BRIDGE
SOURCE SIDE BRIDGE
FLYWHEEL
MOTOR/ GENERATOR
GATING FOR LOAD SIDE BRIDGE
GATING FOR MOTOR/GENERATOR BRIDGE
GATING FOR SOURCE SIDE BRIDGE
DSP CONTROLER

OPERATION MODULES AND MODES FOR DIFFERENT APPLICATIONS

	UPS APPLICATIONS		HOUSE HOLD APPLICATIONS		ELECTRIC VEHICLE		UTILITY LOAD LEVELING	
SOURCE SIDE BRIDGE	ON	OFF	ON	OFF			ON (IN)	ON (OUT)
MOTOR/ GENE BRIDGE	MOTOR MODE ON	GENE. MODE ON	MOTOR MODE ON	GENE. MODE ON	MOTOR MODE ON	GENE. MODE ON	MOTOR MODE ON	GENE. MODE ON
LOAD SIDE BRIDGE	OFF	ON	OFF	ON				
	FLYWHE CHARGE	FLYWHE DISCHA	FLYWHE CHARGE	FLYWHE DISCHA	FLYWHE CHARGE	FLYWHE DISCHA	FLYWHE CHARGE	FLYWHE DISCHA

- 40 KW
- 880V
- Air Cool
- Vector Control
- Space Vector Sine PWM
- Four Quadrant Operation

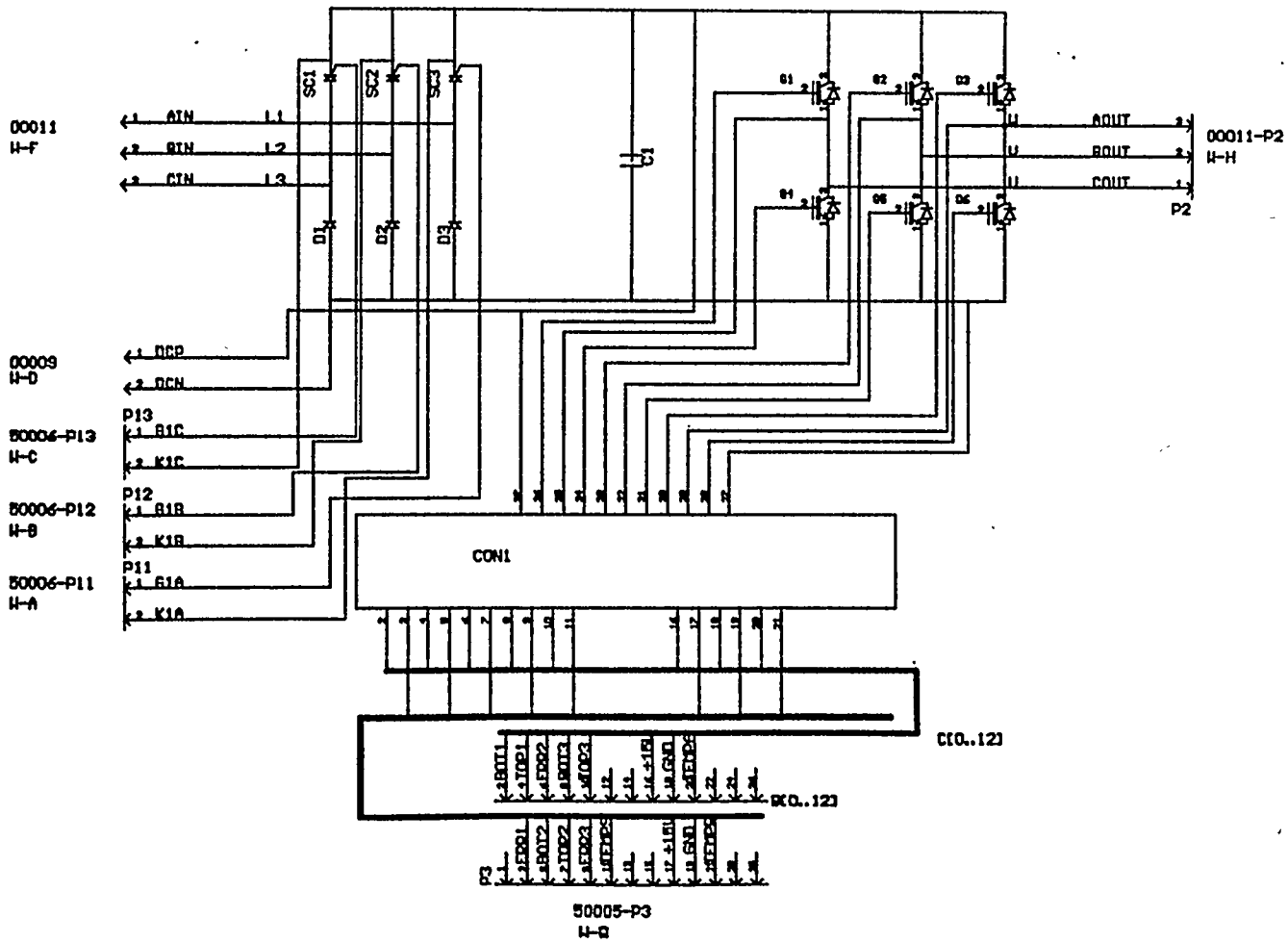

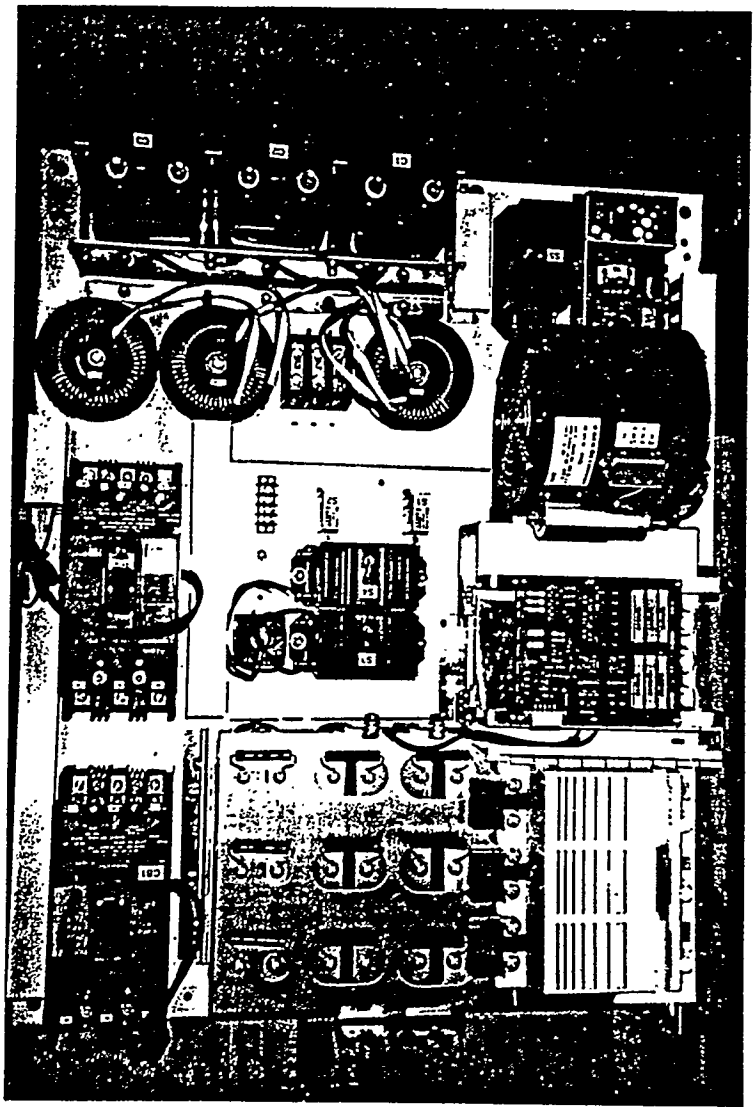

DIGITAL SIGNAL PROCESSING CONTROLLER

- Multiple Bridge Control
- Space Vector PWM Generation
- Power Flow Control
- Flux Linkage Position Observer
- Vector Control For Constant Power Regeneration
- Minimizing Size, Weight And Cost Of Power Electronics

FLYWHEEL ENERGY STORAGE WORKSHOP
October 31 - November 3, 1995
Oak Ridge, Tennessee

Current State in the Application of Magnetodynamic (Flywheel-) Storage Systems in Urban Transport Buses

Gerhard Reiner

MAGNET-MOTOR GMBH
Petersbrunner Strasse 2, D-82319 Starnberg, Germany
Phone: +49-8151-262-0 Fax: +49-8151-12478

MAGNET MOTOR GMBH

- Function principle and main features of a Magnetodynamic Storage (MDS)
- Commercial operation of MDS in
  - diesel electric storage buses
  - trolley buses
- New MDS-types
- Conclusion and prospects

MAGNET MOTOR GMBH

Magnetodynamic Storage (MDS)

High-Power / High-Energy Flywheel Storage

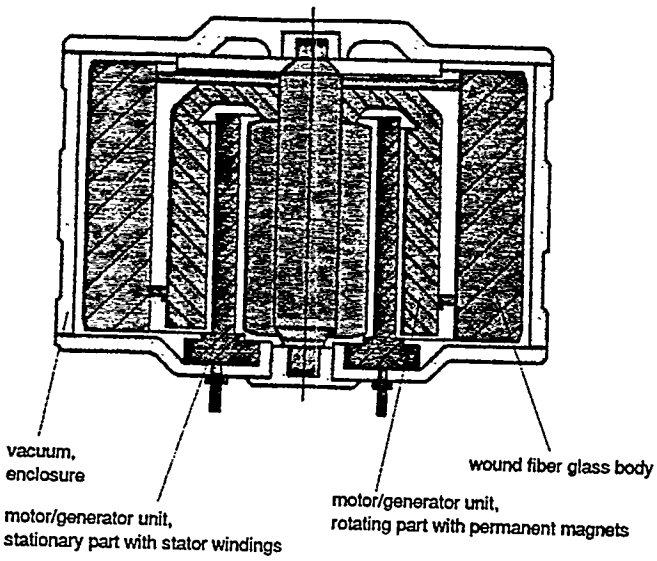

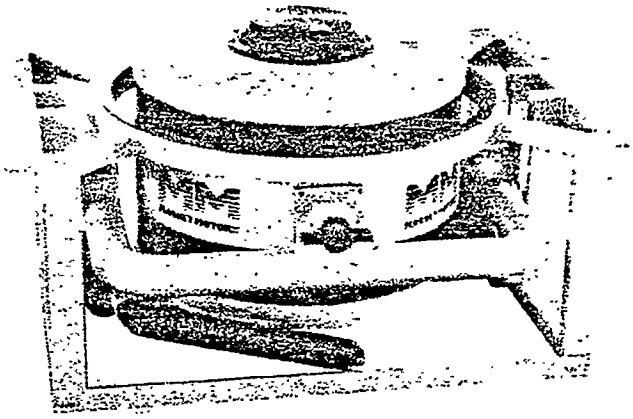

- very high power density
- extremly high cycle numbers
- high efficiency values at full and partial load
- automatic charge and discharge operation
- integrated design without mechanical feed-throughs and without gear

N3

Magnetodynamic Storage (MDS)

Overview about MDS-Equipped Buses in Public Transport Service

MAGNET MOTOR

- 2 diesel electric buses operating in Munich since 1988
- 7 (12 until the end of 1995) trolley buses in the Swiss city of Basel
- 1 diesel electric bus operating in the German city of Herten

N4

95-10-02.XLS / 27.10 95

MM - Antriebssysteme in Omnibussen

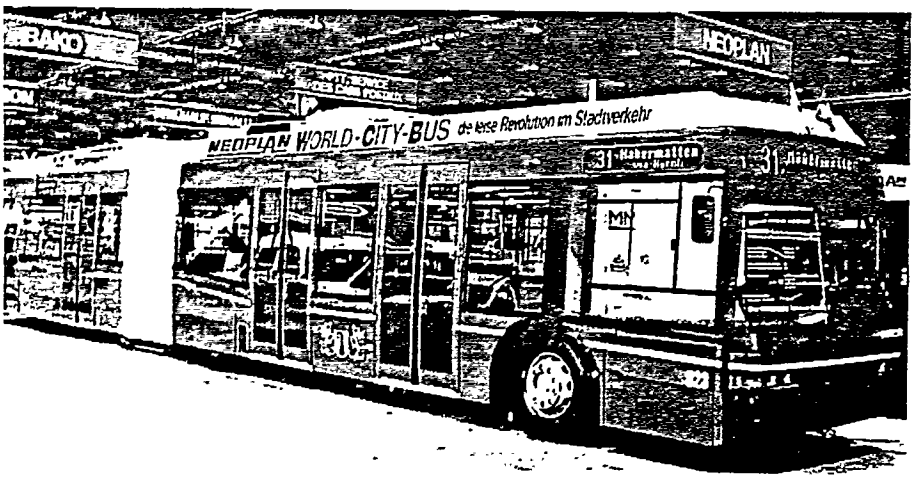

Niederflur – Gelenktrolleybusse
Neoplan N 6020

MM – Antriebssystem:

Elektrischer Einzelradantrieb
und Zwischenspeicher

Münchner Magnet – Motor Busse

MM – Antriebssystem:

Dieselelektrischer Antrieb mit
Zwischenspeicher

Neoplan Metroliner N 8012 DE

MM – Antriebssystem:

Elektrischer Einzelradantrieb
und Dieselmotor – Generator

Neoplan Metroliner N 8012 BE

MM – Antriebssystem:

Elektrischer Einzelradantrieb
und Benzinmotor – Generator

MAGNET MOTOR

MM - Antriebssysteme in Omnibussen

Neoplan Stadtbusse N 4014 DE

MM – Antriebssystem:

Elektrischer Einzelradantrieb
und Dieselmotor – Generator

Flughafen – Vorfeldbusse

MM – Antriebssystem:

Elektrischer Einzelradantrieb
und Dieselmotor – Generator

MEV – Metroliner Prototyp

MM – Antriebssystem:

Elektrischer Einzelradantrieb mit
Benzinmotor – Generator
und zusätzlicher Varta NiH – Batterie

Elektro – Citybusse

MM – Antriebssystem:

Elektrischer Einzelradantrieb
Energieversorgung: Diverse
Batteriesysteme

Magnet – Motor GmbH Petersbrunnerstr. 2 D-82319 Starnberg Tel: 08151 /262 – 0 Telefax: 08151 /12478

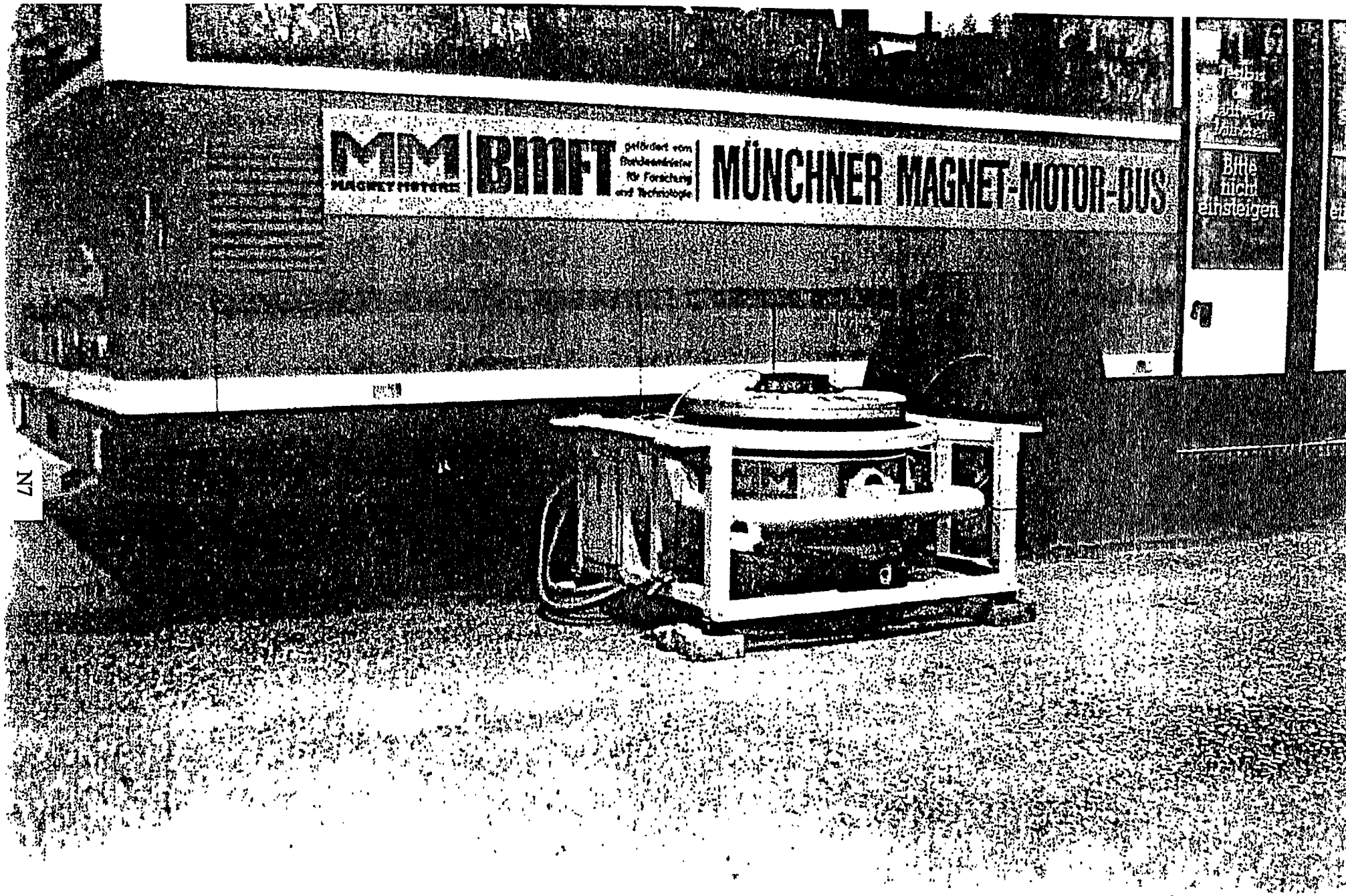
MM
MAGNETMOTOR
BMFT
gefördert vom Bundesminister für Forschung und Technologie
MÜNCHNER MAGNET-MOTOR-BUS
Bitte nicht einsteigen

N7

N8

Block Diagram of a Diesel Electric Bus with a Magnetodynamic Storage

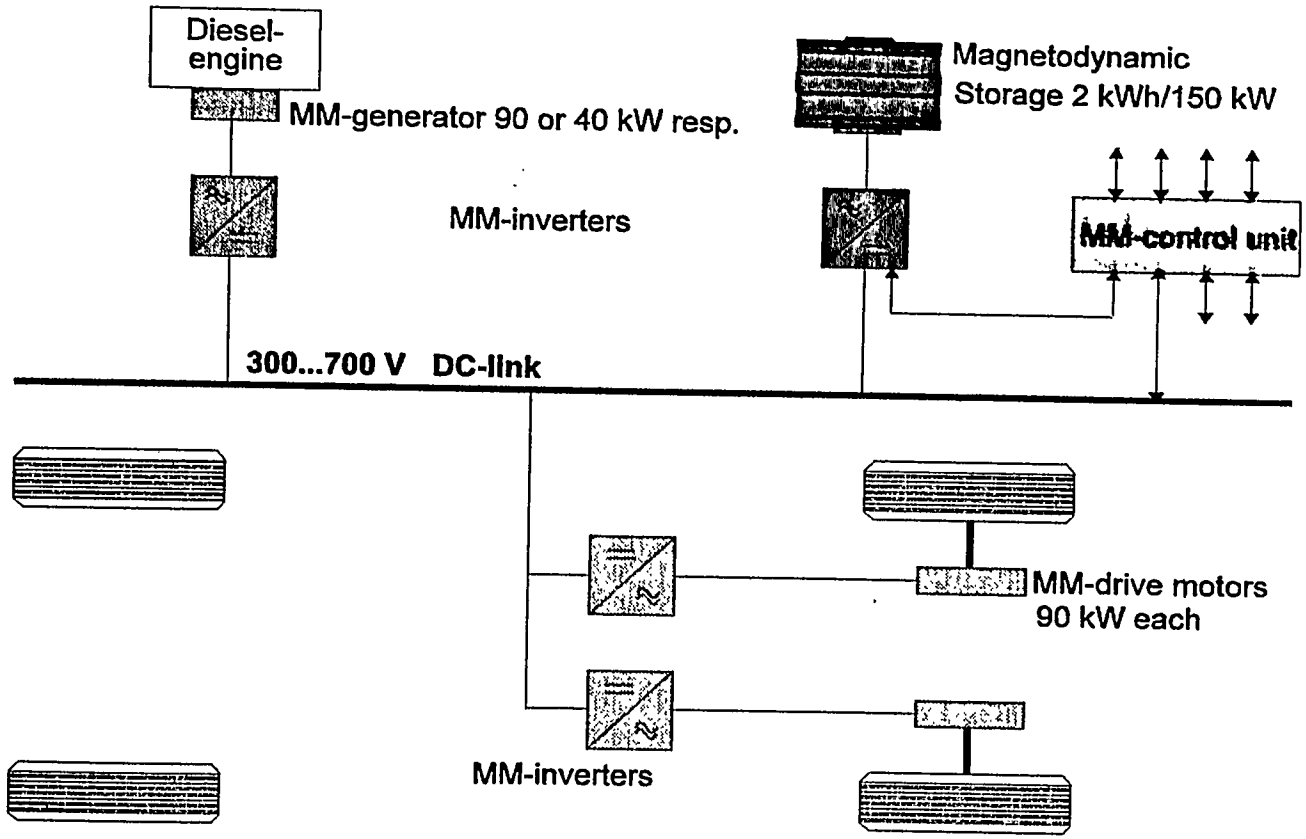

MAGNET MOTOR

VDI9440E.XLS 26.10.95

MAGNET MOTOR

Neoplan Metroliner N 4114 DES

MM drive system : Diesel-elektric propulsion
with wheel drives
plus Magnetodynamic Storage

"Bus of the Year 1995"

MAGNET MOTOR

Diesel-electric Drive System with Energy Storage for Buses

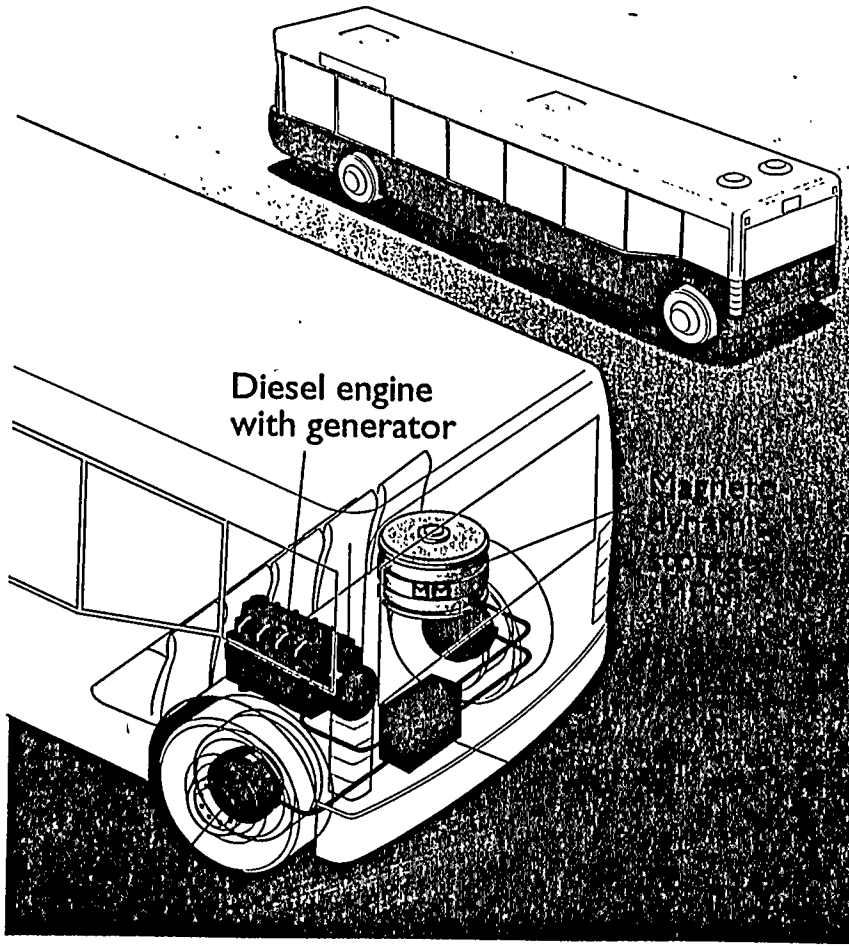

The electric power transmission from the Diesel engine to the wheels gains additional advantages by combining it with a MDS flywheel energy storage.

Thus brake energy can be recovered and the highly fuel-consuming intermittent operation of the Diesel engine can be avoided.

System advantages:

- [illegible]
- [illegible]
- [illegible]
- [illegible]
- [illegible]

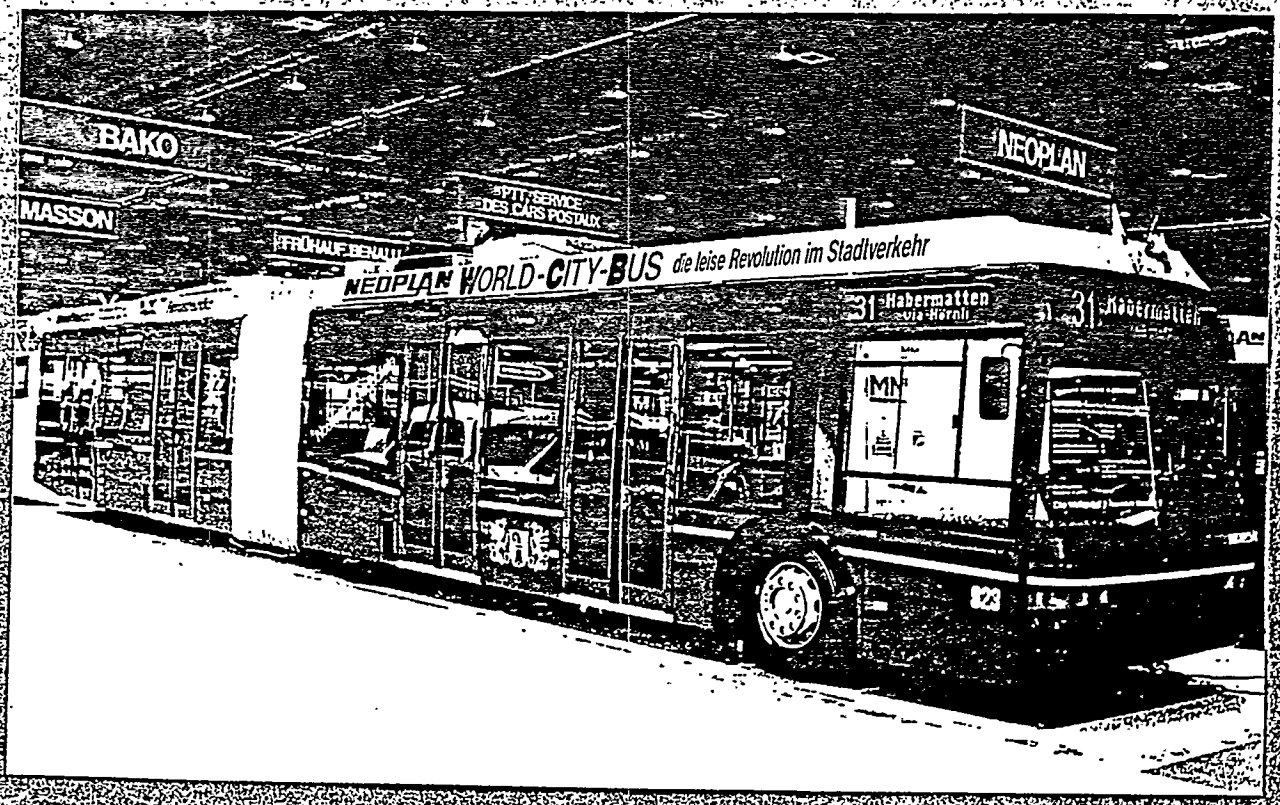

MAGNET MOTOR

Trolleybus with MAGNET-MOTOR propulsion system and Magnetic Dynamic Storage - MDS

Block Diagram of a Trolley Bus Power Circuit

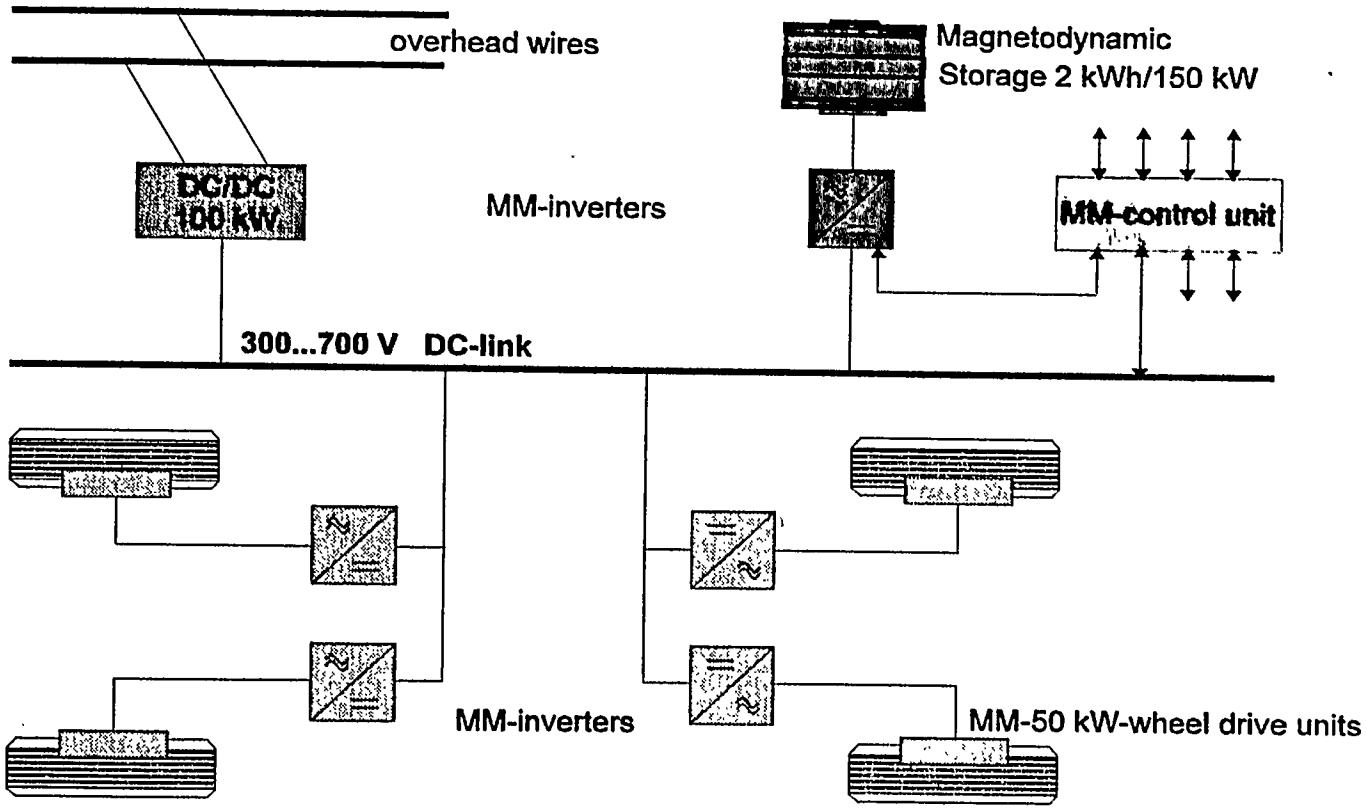

MAGNET MOTOR

VDI9441E.XLS 26.10.95

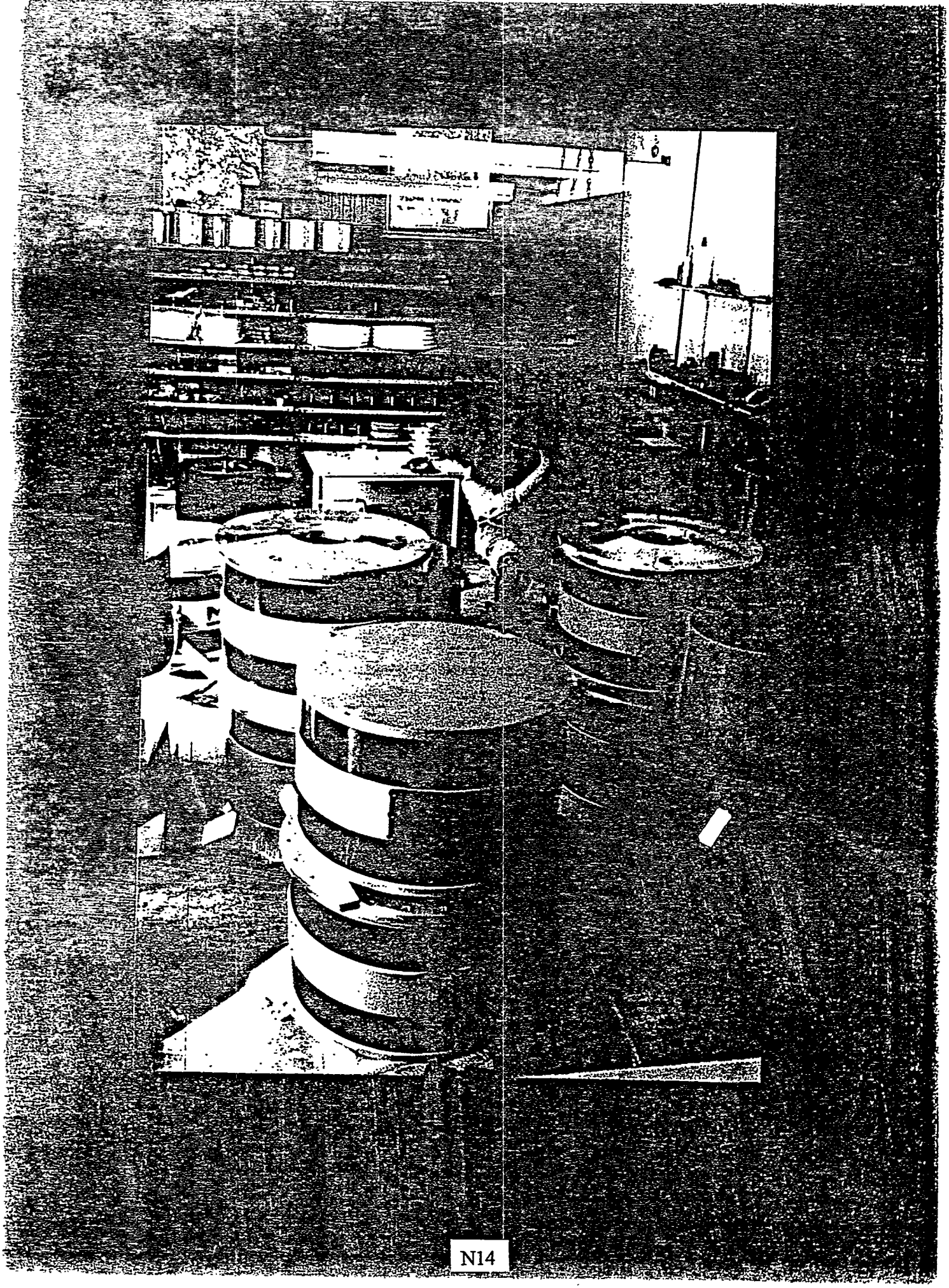

N14

Generalized Block Diagram for Connecting Magnetodynamic Storage Units to a DC-Link

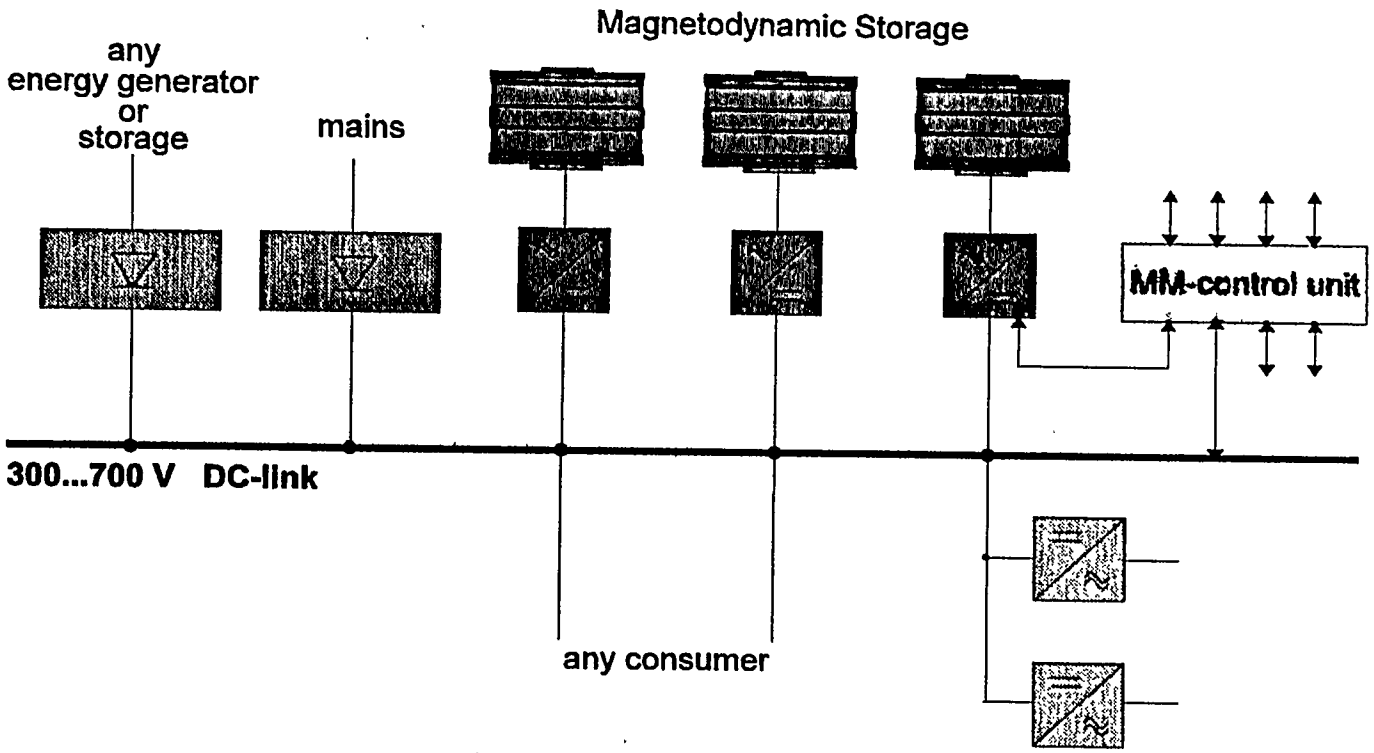

MAGNET MOTOR

VD9442E.XLS 26.10.95

Magnetodynamic Storage MDS L1

Stored Energy: 78 MJ; Power: 5 MW

MM
MAGNET MOTOR

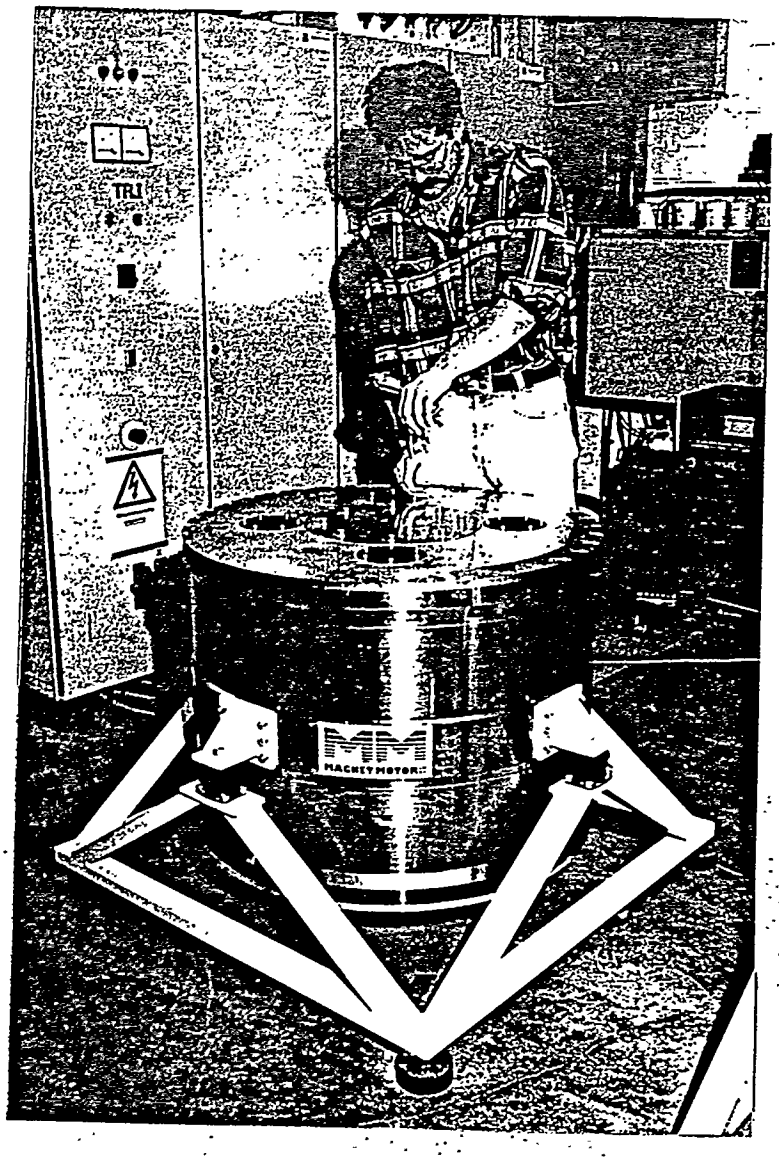

Magnetodynamic Storage
MDS L2 (80 MJ/2.5 MW)

MAGNET MOTORS

Magnetodynamic Storages

MDS K, MDS L2 and MDS L1

MAGNET MOTOR

Magnetodynamic Storages
MDS K, MDS L1 and MDS L2

MAGNET MOTOR

design data		MDS-K	MDS-L1	MDS-L2	
energy	E =	7.2	78	80	MJ
max. power	P =	0.3	5	2.5	MW
max. voltage	U =	650	500	500	V
max. current	I =	0.5	12	6	kA
speed	n =	12,000	8,800	17,000	1/min
diameter	D =	620	1,250	900	mm
axial length	H =	650	950	800	mm
volume	V =	0.19	1.17	0.5	m^3
weight	m =	0.4	2.1	1.0	t
spec. energy:	e =	18	37	80	MJ/t
spec. power:	p =	1.0	2.4	2.5	MW/t

95-09-03.XLS, 26.10.1995

Magnetodynamic Storage (MDS)

Conclusion and Prospects

MAGNET MOTOR

- Magnetodynamic Storage Systems are operating in public transport buses since 1988
- currently 10 MDS-equipped buses are in operation
  15 at the end of 1995
- milage of the first trolley bus is currently 180,000 km
  operation hours of the integrated MDS are 14,000
  cycle number of this MDS is about 250,000
- very good experiences with bus and MDS and well accepted
- new MDS types have been tested successfully

Developments in Polar Woven/RTM Composite Flywheel Rotors

David Maass
Dow-UT Composite Products
(203) 949 5046 david.maass@dowut.com

Flywheel Energy Storage Workshop
Oak Ridge, TN
Nov. 1, 1995

Dow-UT is a Joint Venture formed in 1989

Dow Chemical

- Resin Technology
- High volume polymer processing
- Large Capital Investment

United Technologies

- Long term production contracts
- Modern factory
- Established processes
- Technical staff

Discussion Topics

- Flywheel Rotor Background
- Limitations of Filament Winding
- Polar Woven/RTM Approach
- Materials
- Processing
- Test Data
- Cost Projections
- Key Issues

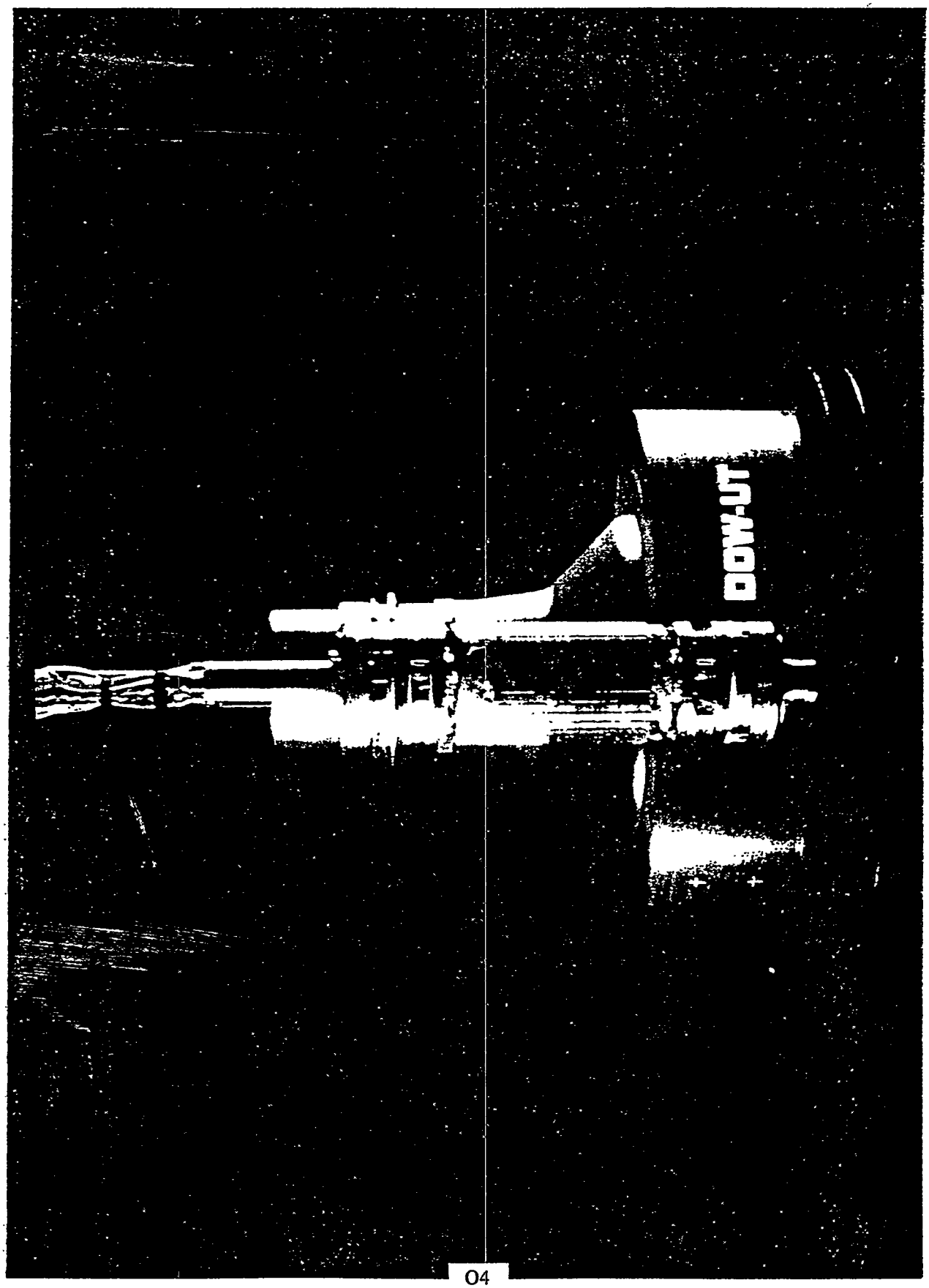
DOW-UT

Limitations of Filament Winding

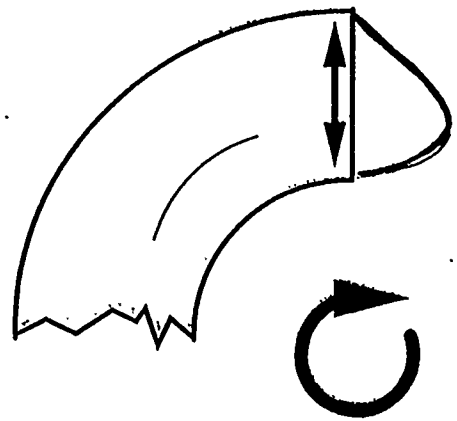

F_{radial}

- **Very low radial strength**
- **To acheive higher radial Strength**
  - Toughness-vs- temperature tradeoff
  - Tougher resins more costly ($5/lb and up)
- **To reduce applied radial Stress**
  - Use higher modulus OD fiber
  - Higher fiber costs

DOW-UT
COMPOSITE PRODUCTS, INC

COMPANY PRIVATE

Polar Woven/RTM Approach

- Fiber dominated
  - Graphite hoops
  - Glass radials
- Automated fiber placement
- Low cost potential
- Uses Dow-UT RTM expertise
- Scaleable

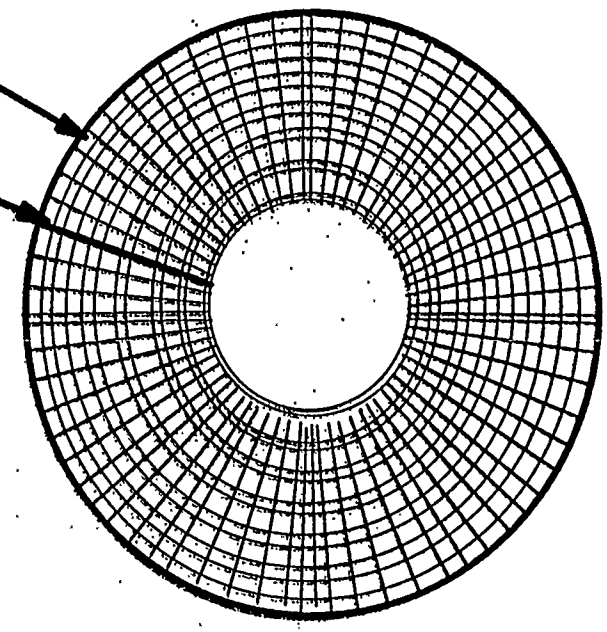

POLAR WEAVING

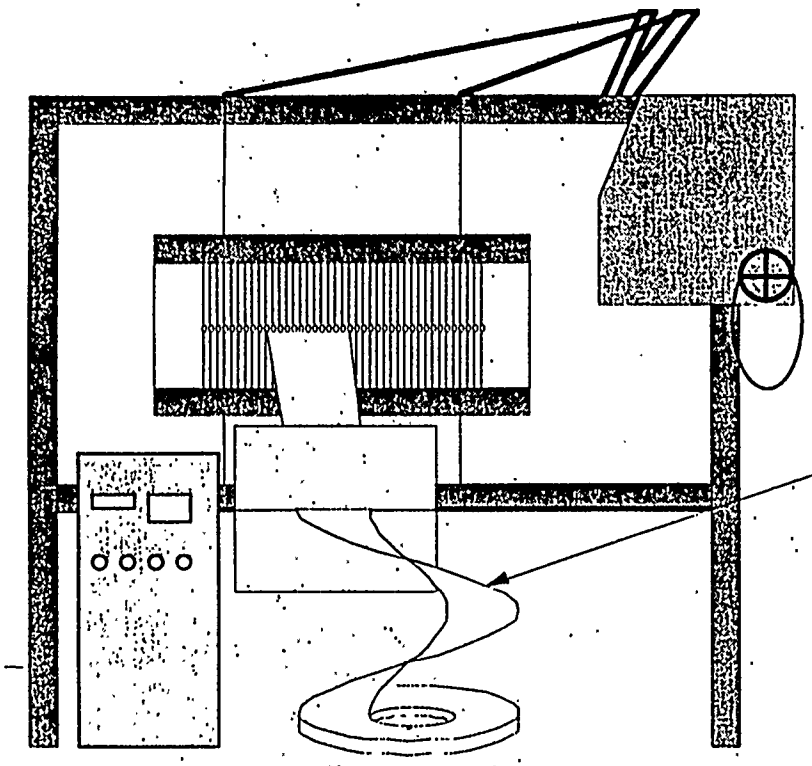

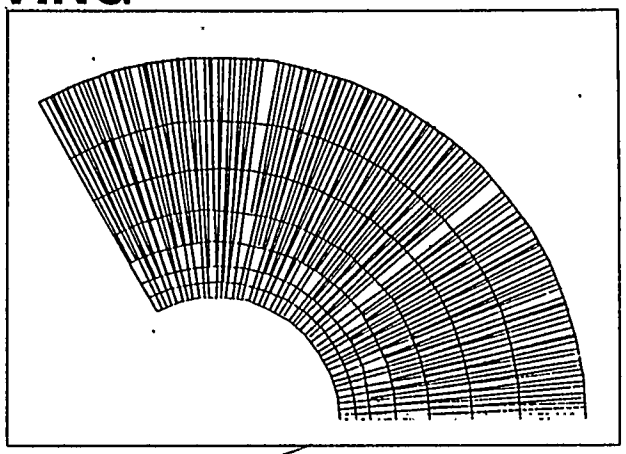

- Spiral shaped woven fabric.
- Pre-defined OD and ID.
- Radial and circumferential fiber orientations.
- Uniform fabric areal weight.
- Available flat or contoured to net shapes.

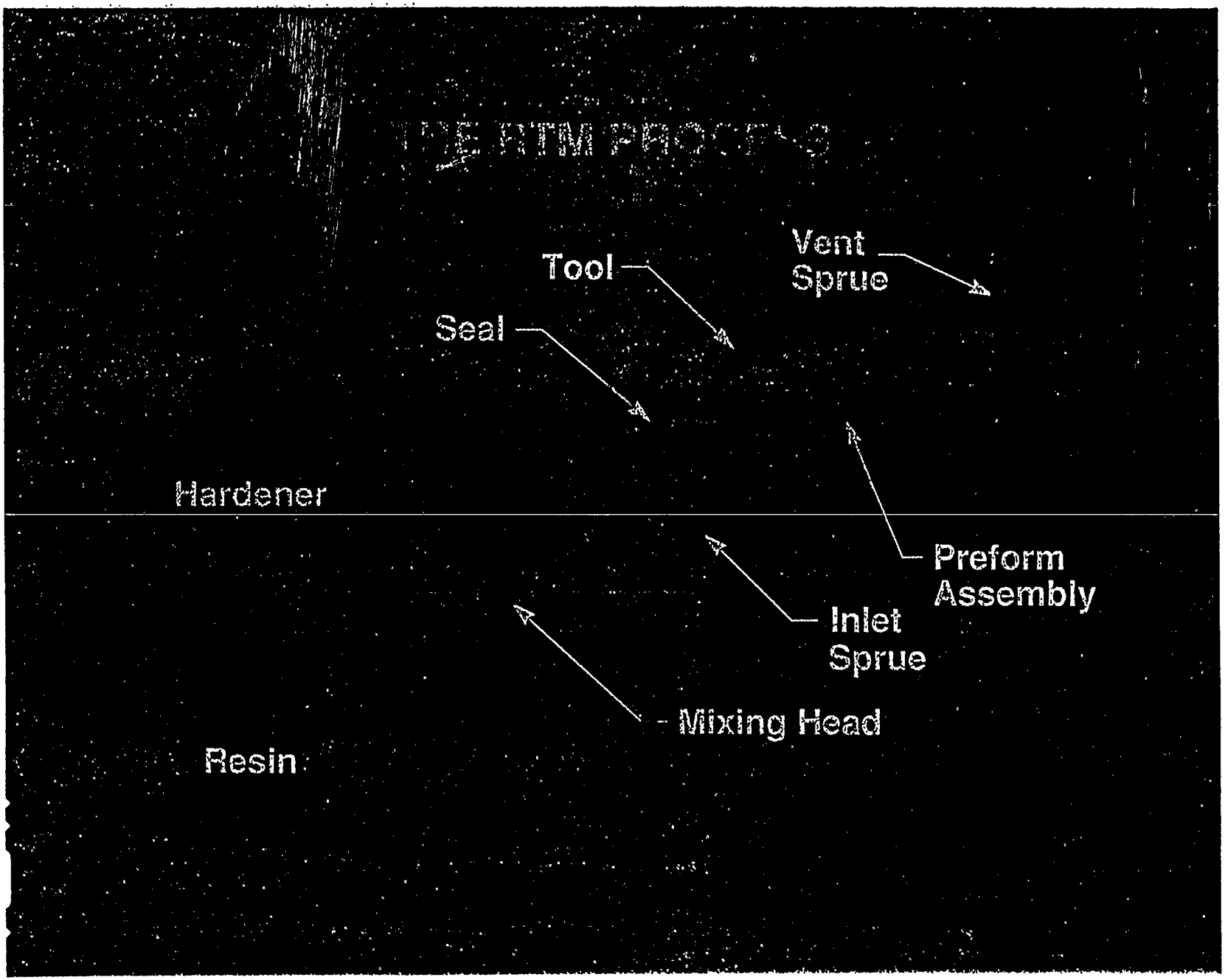
Tool
Vent
Sprue
Seal
Hardener
Preform
Assembly
Inlet
Sprue
Mixing Head
Resin

Two Designs Developed

- **All-Graphite CFR**
  - Same geometry as baseline FW design
  - 33 msi fiber only (no high modulus)
  - Conservative (i.e. - low) strain values
  - Infinite life

- **Hybrid design**
  - Approximately 35% Glass, 65% Graphite
  - Higher strains but within allowable level
  - Finite life, but within service requirements
  - Substantially lower material costs

Fiber Selection Criteria

For cost-sensitive applications (such as utility PQ and energy storage devices), fiber selection criteria is

Maximum tensile strength per dollar

DOW-UT

Strength-Cost Tradeoffs

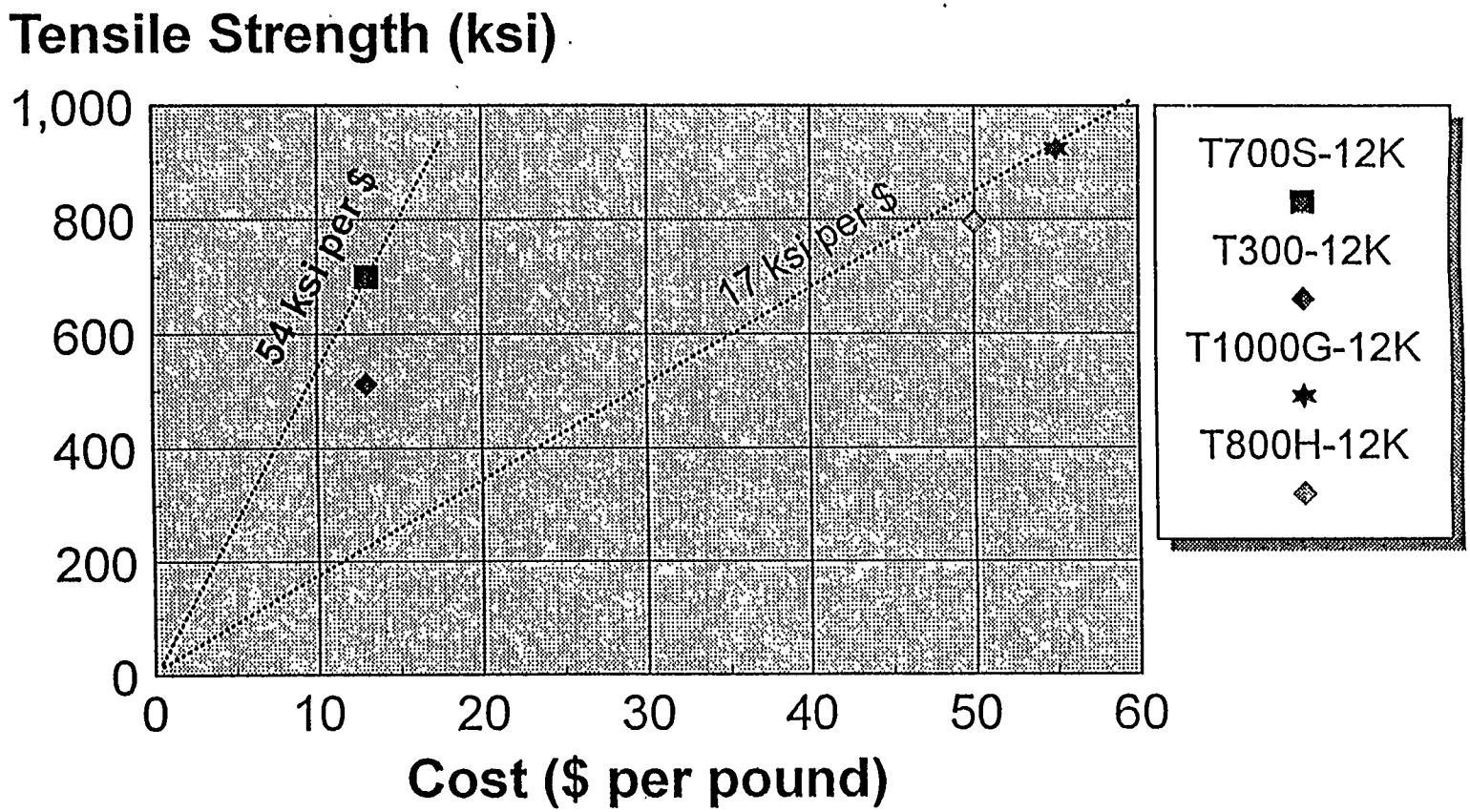

DOW-UT

Fiber Comparisons

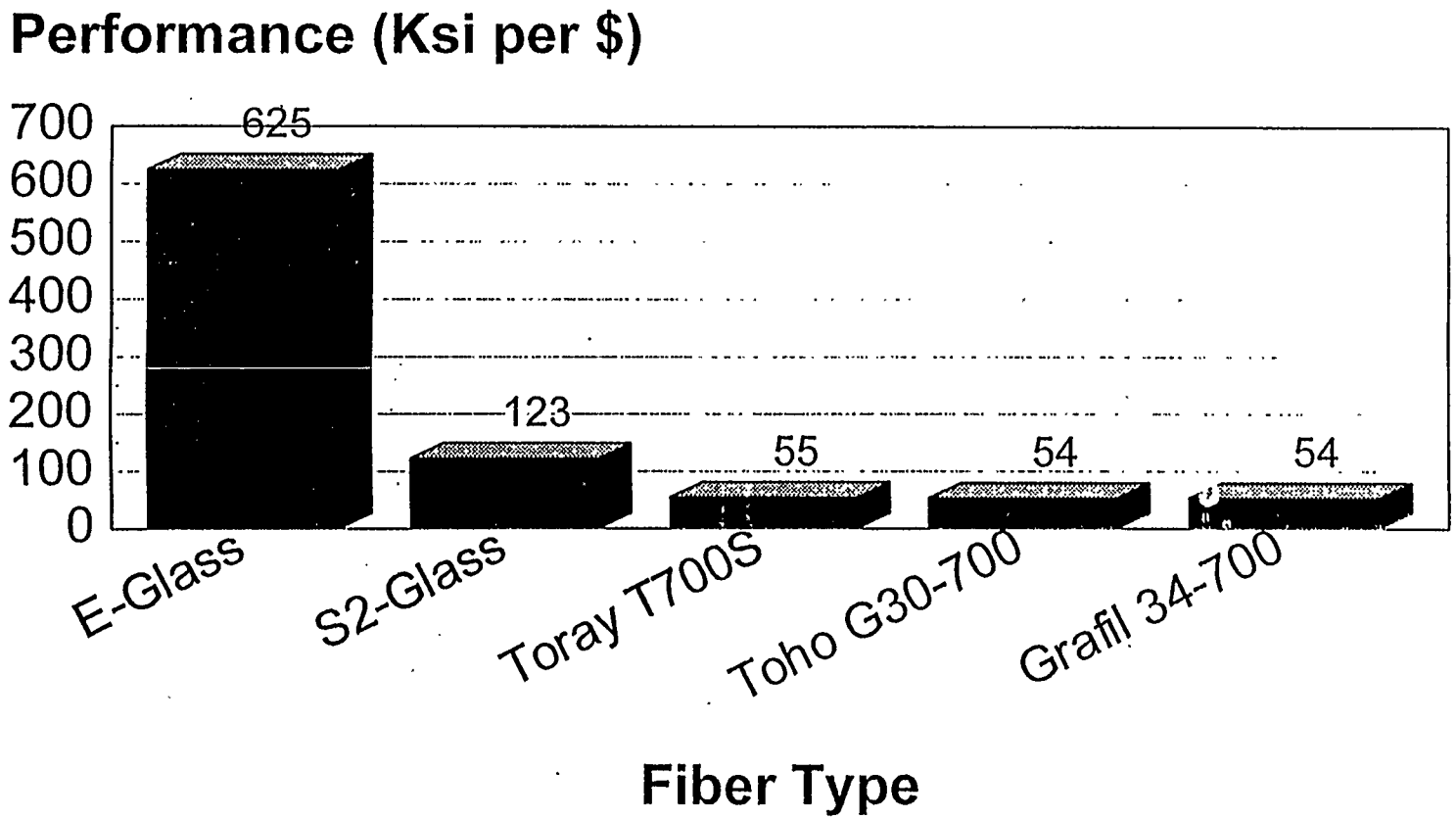

DOW-UT
COMPOSITE PRODUCTS, INC

Outgassing Test Data

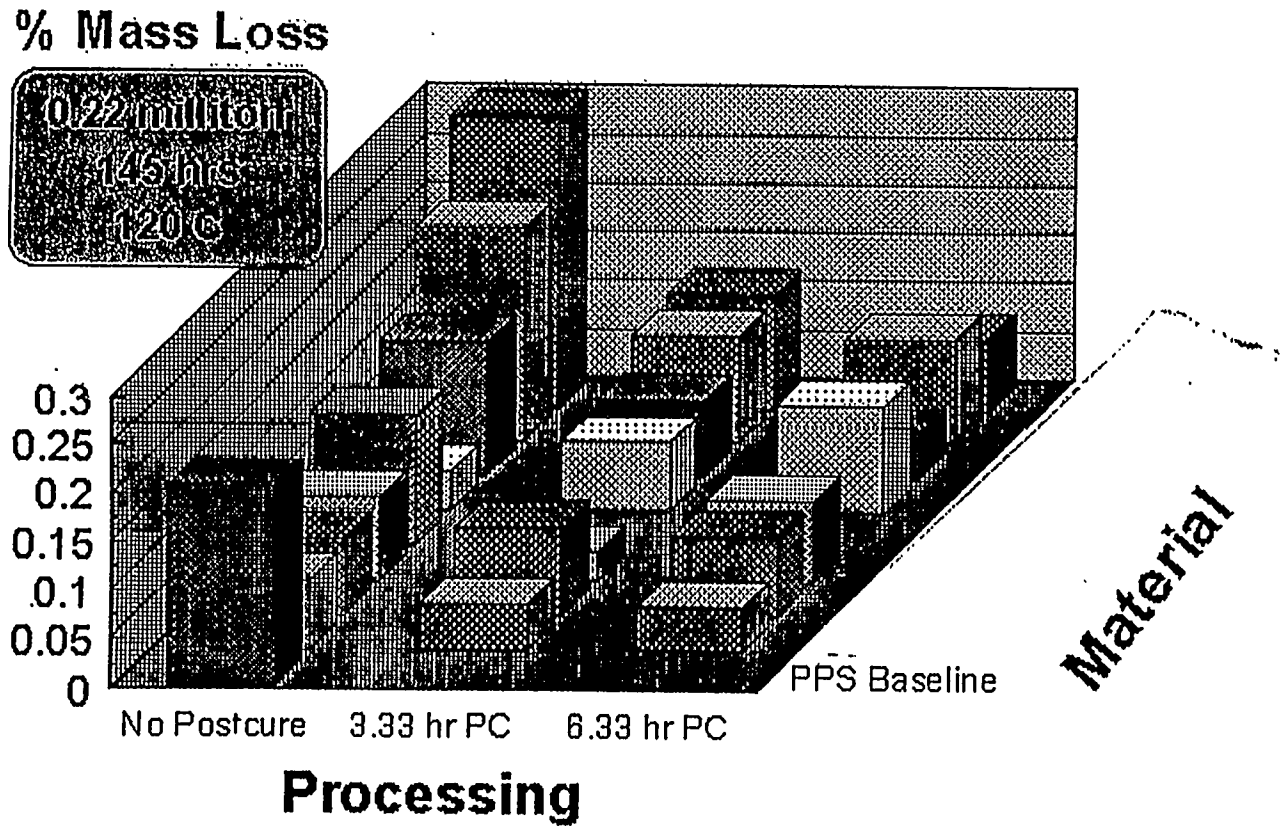

Fabrication Activity

- **Process summary**
  - Polar weaving
  - Preform tackification/debulk
  - Resin Transfer Molding
  - All surfaces ground
- **Molded part quality superb**
  - 20X better than F22 acceptance criteria
  - 3db attenuation in 3" thickness
  - No microcracks
- **Molding experience suggests process is scaleable to much larger parts**
  - Very quick injection time
  - No significant exotherm

Spin Test Results

- Test results to date are for Gr/Glass Hybrid only
- Strain gages at 9 locations.
- Good readings up to 25 - 30Krpm
- Strains fit w^2 relationship almost perfectly
- High confidance in extrapolation
- Highest strain location and magnitude within 3% of predicted value

Strain Plots Chart 1

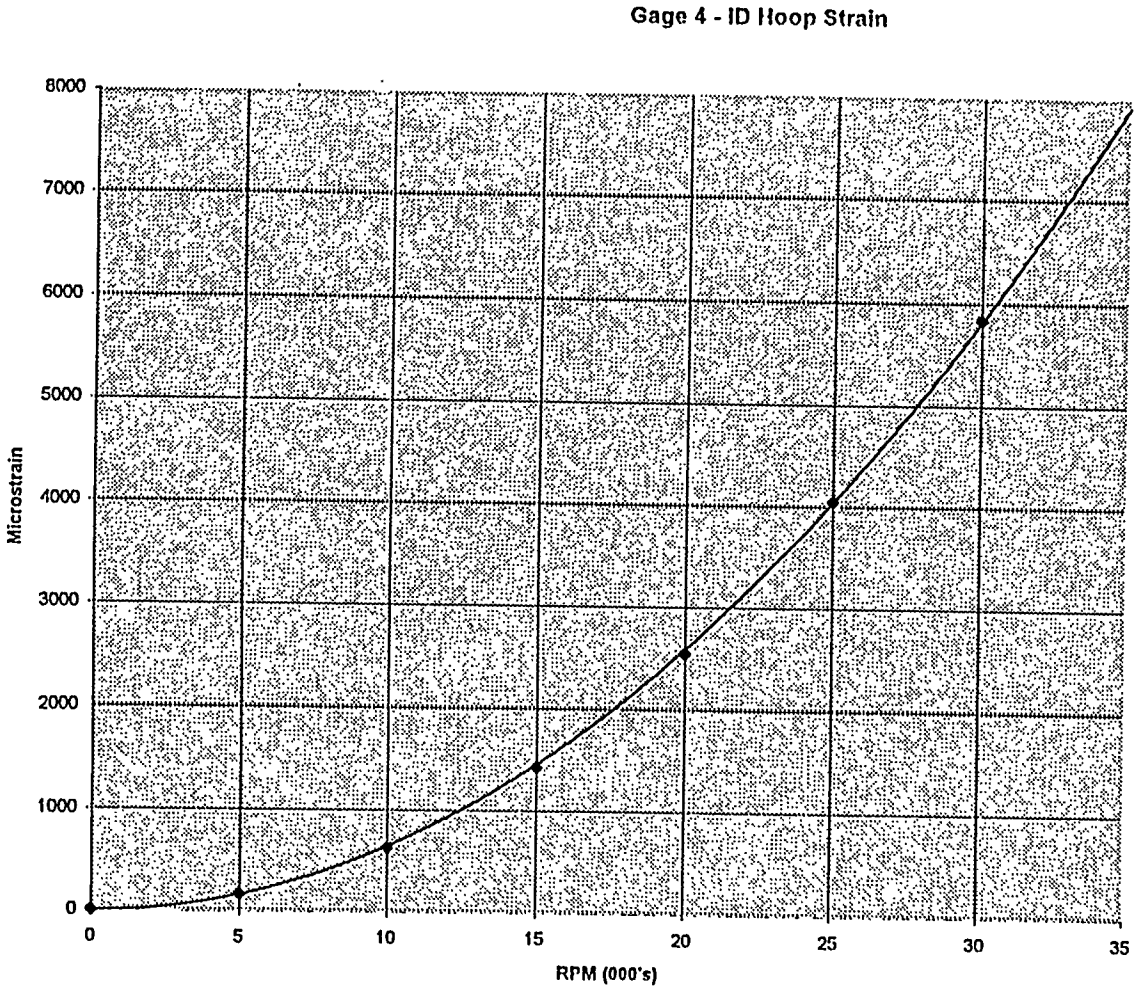

Strain Actuals Allow For Burst and Life Prediction

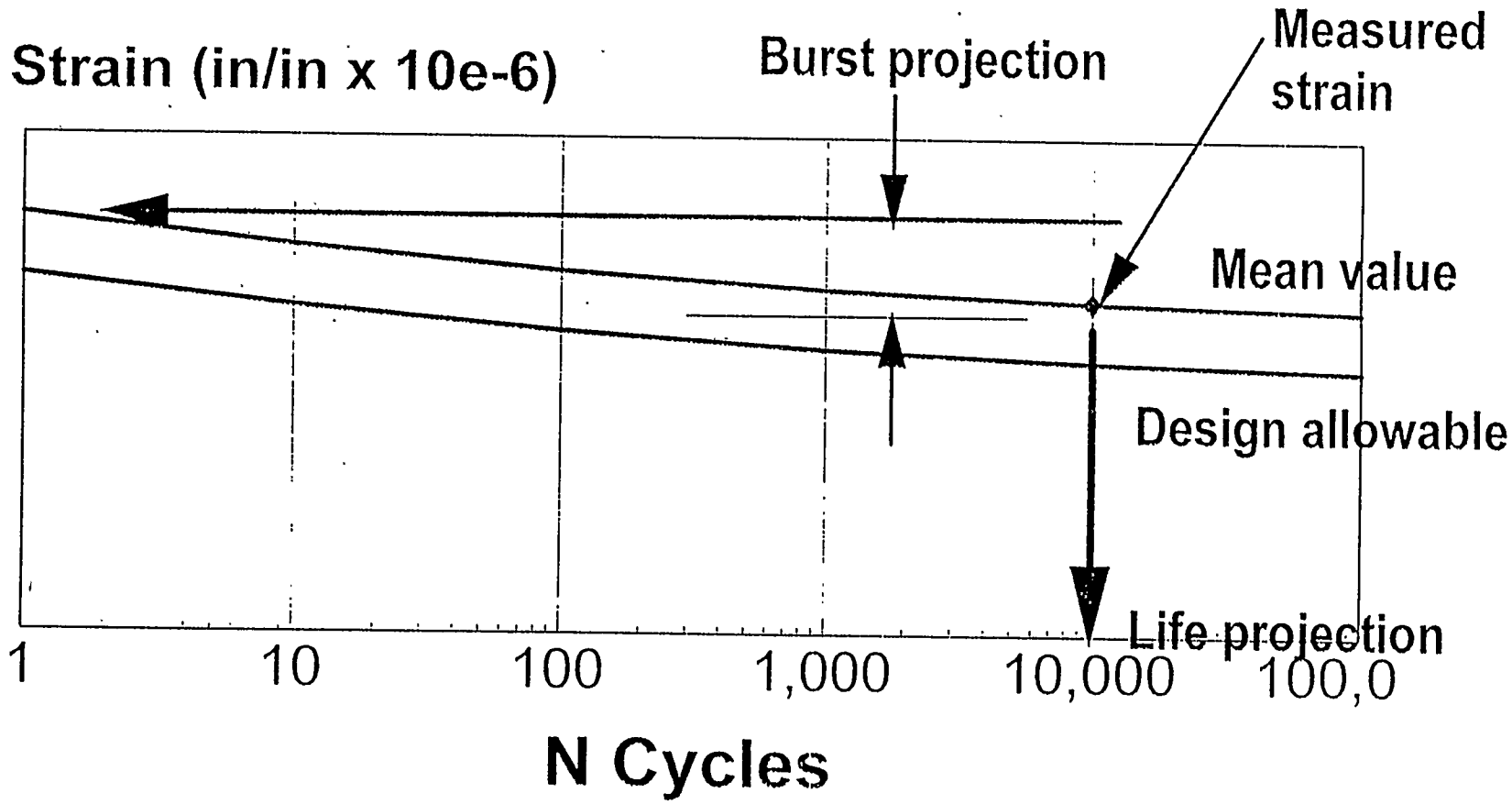

GI/Graphite Performance Projections

- **Static Burst - 43,000 rpm (*estimate*)**
- **Fatigue**
  - 512 actual cycles accumulated (at 10% to 100% max rpm)
  - Will accummulate additional cycles by year-end
  - Life projected to meet life requirement

Limitations of Steel Hub

- Precipitates fatigue failure in unconstrained regions
- Cannot tolerate cyclic strains of the composite rotor (CFR)
- Forces the CFR to operate at low (inefficient) strain levels
- Leads to higher cost

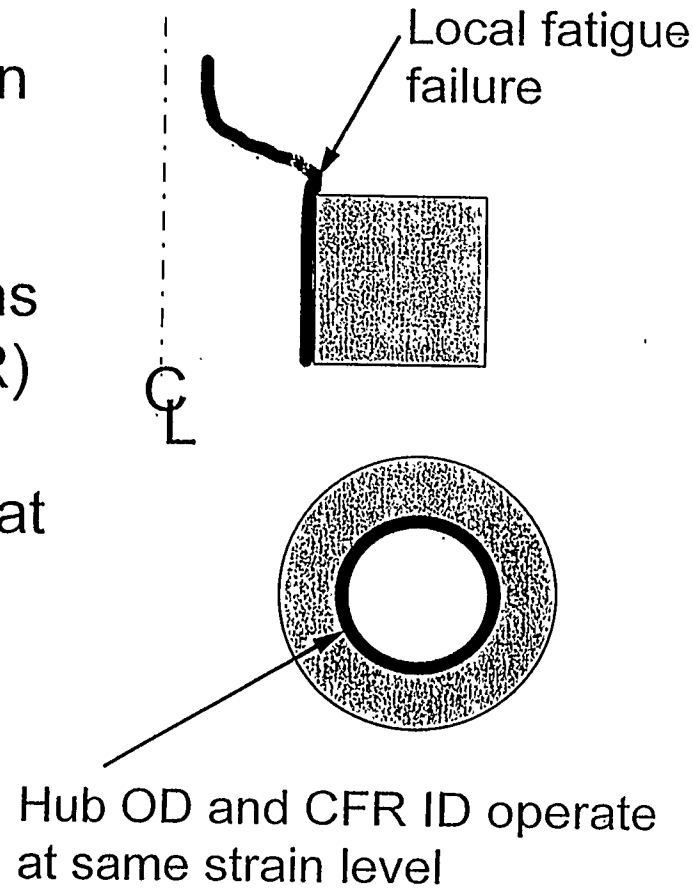

Comparative Fatigue Performance

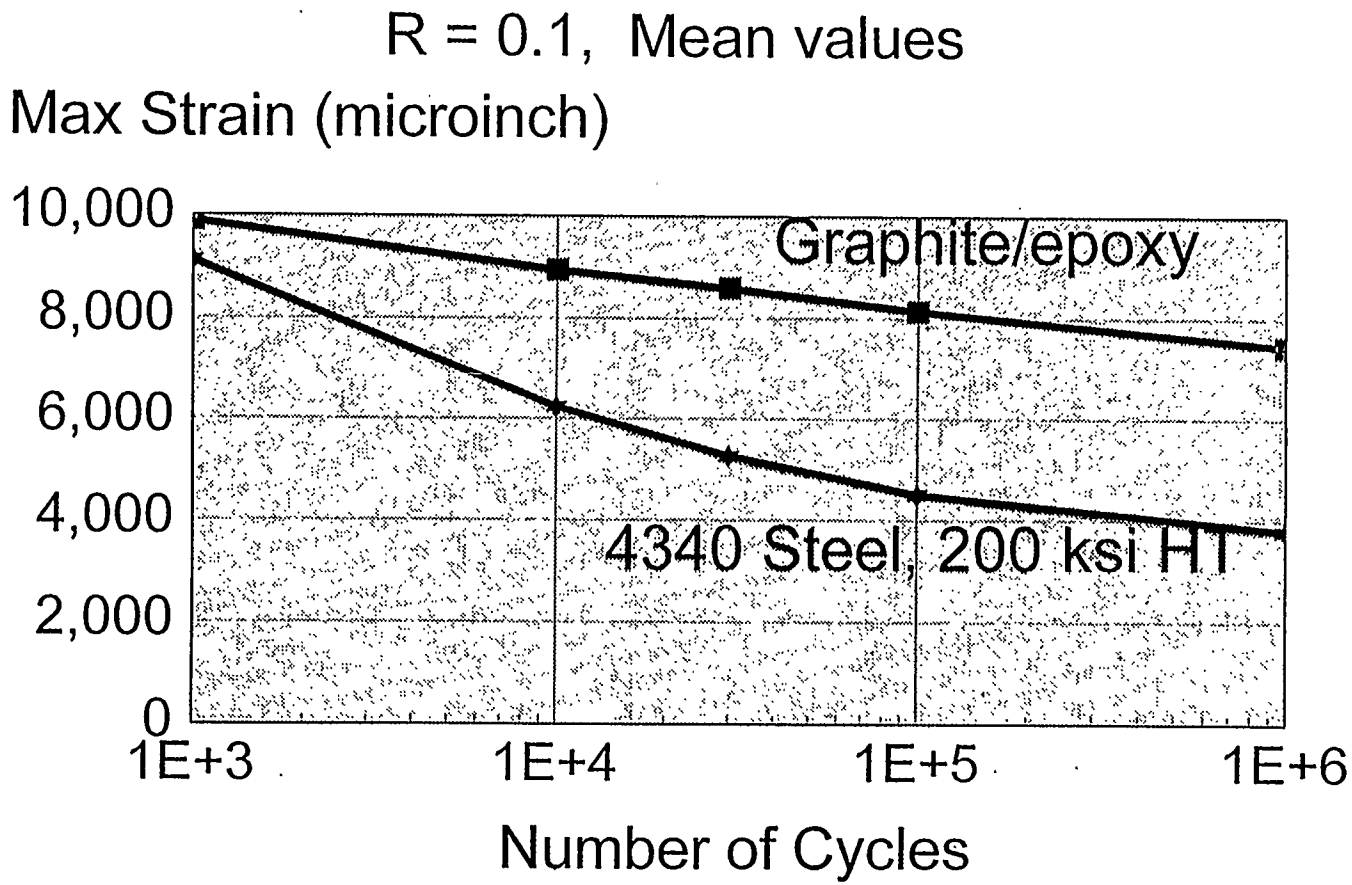

O21

PW/RTM Cost Projections

- ***COST*** is the real commercialization issue - Can a high performance CFR be *affordable*?
- Real parameter is

$$\left(\frac{\$}{\text{kw-hr}}\right) = \left(\frac{\$}{\text{lb}}\right) \times \left(\frac{\text{lb}}{\text{kw-hr}}\right)$$

- In any high volume process, part cost is dominated by material cost

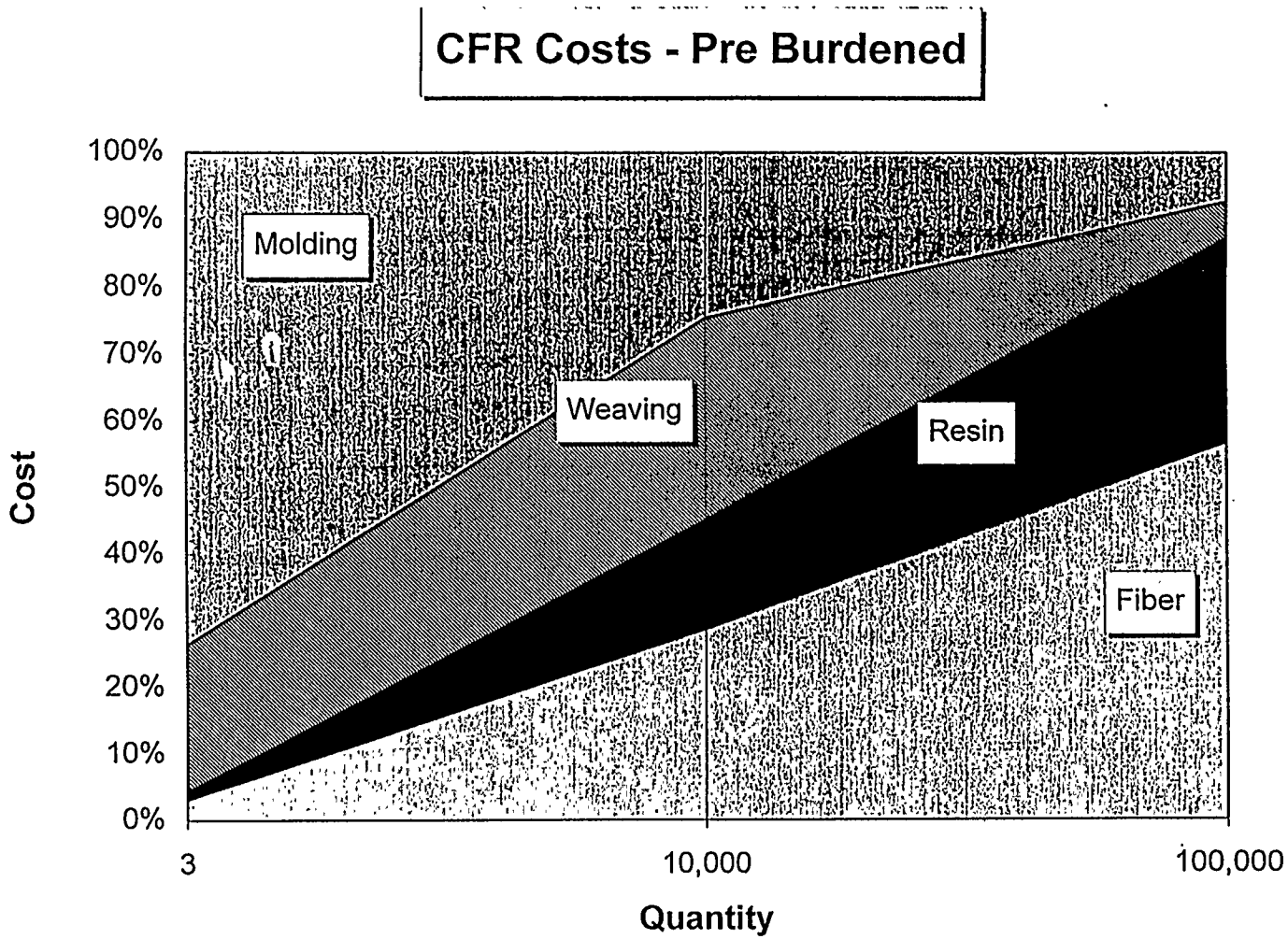
CFR Costs - Pre Burdened
100%
90%
80%
70%
60%
50%
40%
30%
20%
10%
0%
Cost
Molding
Weaving
Resin
Fiber
3
10,000
100,000
Quantity

Material Cost Comparison

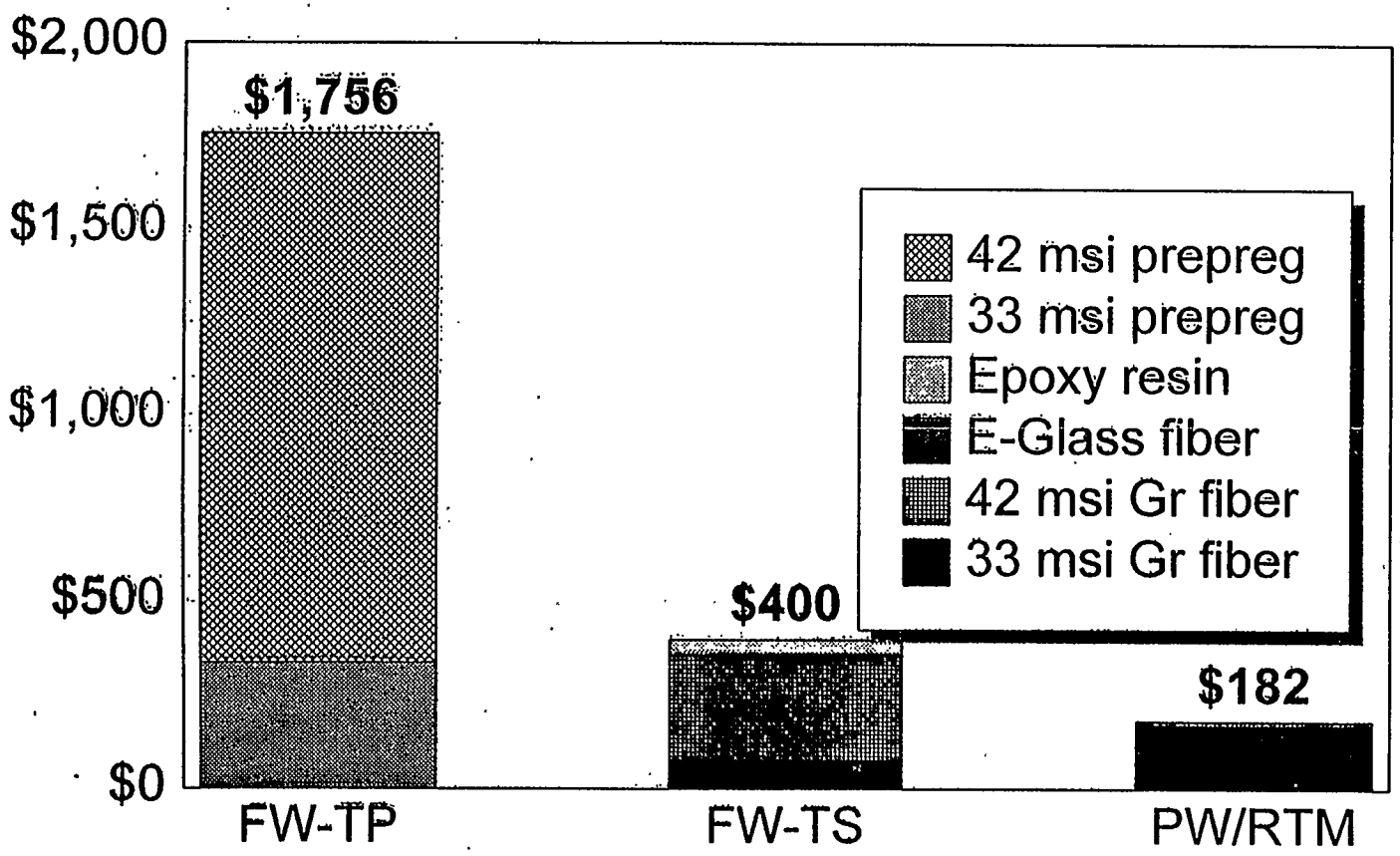

DOW-UT
COMPOSITE PRODUCTS, INC

COMPANY PRIVATE

Raw Material Cost Comparison

Filament Wound

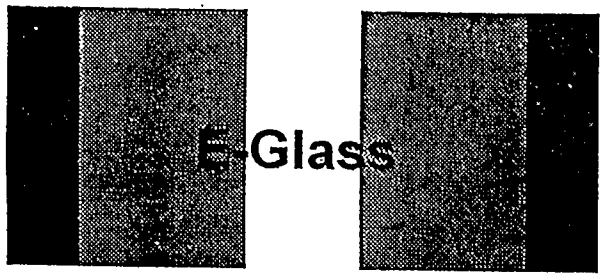

Graphite

PW/RTM Approach

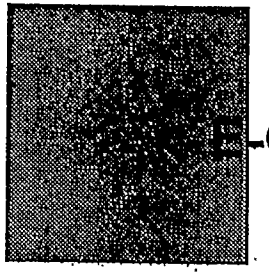

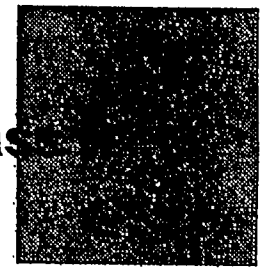

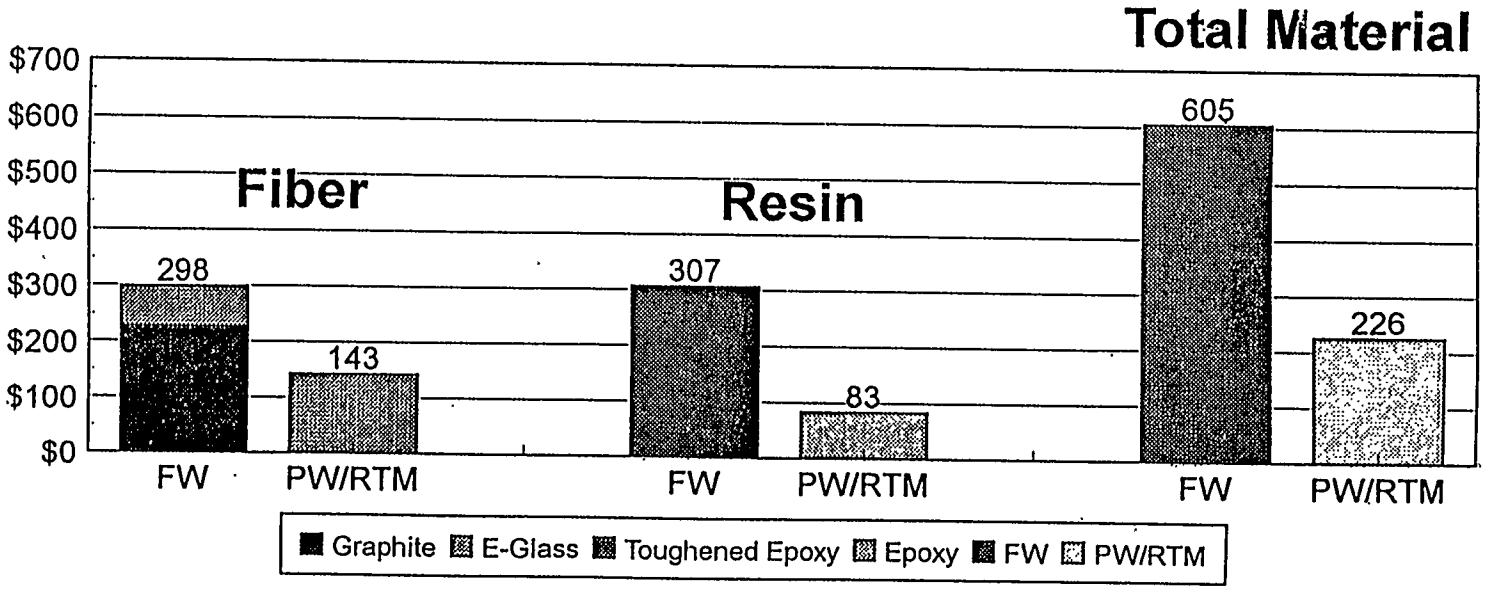

NIST Program Complements Inhouse Flywheel Program

- **Program is one year, $900K LOE**
- **Automotive focus, but data very relevant for other applications**
- **Major tasks**
  - Key property database
  - CFR design, fab, and test (auto FSPU)
  - Burst and LCF spin tests
- **Intellectual Property**
  - IP rights owned/controlled by Dow-UT
  - Use to support Dow-UT customers

Key Issues

- **Business Issues**
  - What are System cost targets?
  - What are Rotor cost targets?
  - Is there a real market at present cost projections?
  - What is the realistic market volume ?
- **Technical Issues**
  - Containment
  - Define specific rotor requirements

Summary

- **Concept very attractive to achieve *lowest cost* CFR's**
- **Fabrication experience to date better than anticipated**
- **Testing to date shows:**
  - Close agreement with analytical predictions
  - >35,000 rpm capability (512 cycles to date)
  - Projected to meet or exceed requirements
- **Several programs underway to demonstrate various Flywheel applications**

Advanced Technology for Flywheel Energy Storage

Flywheel Energy Storage Workshop
October 31 - November 3, 1995
Oak Ridge, TN

T.S. Luhman, M. Strasik, A.C. Day, D.F. Garrigus, T.D. Martin, H.G. Ahlstrom, and K.E. McCrary
Boeing Defense & Space Group
Seattle, Washington, U.S.A.

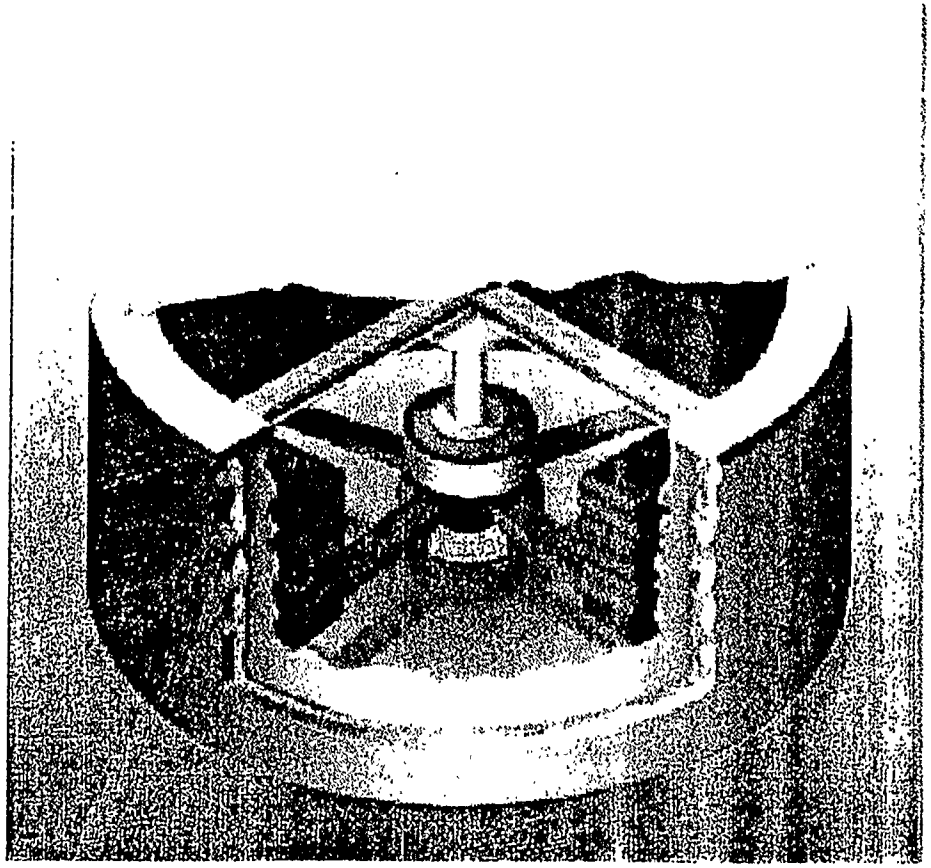

Outline

- FESS Design
  - Thermoplastic Composite Rotor
  - Superconducting Bearings
- Manufacturing Approach
- Bearing Test Facility
- Summary

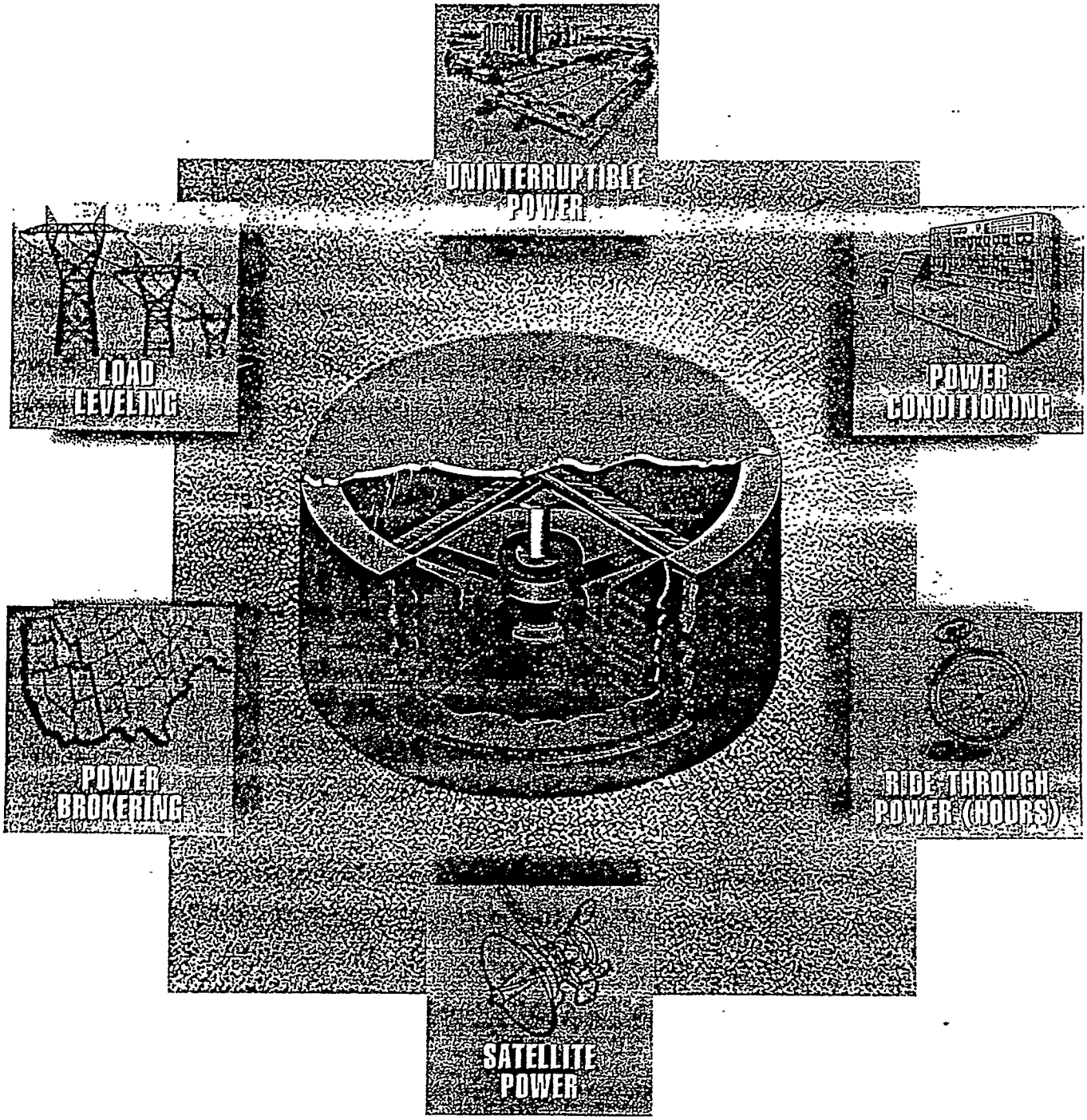

Flywheel Energy Storage Systems

Advanced Technology for Energy Storage

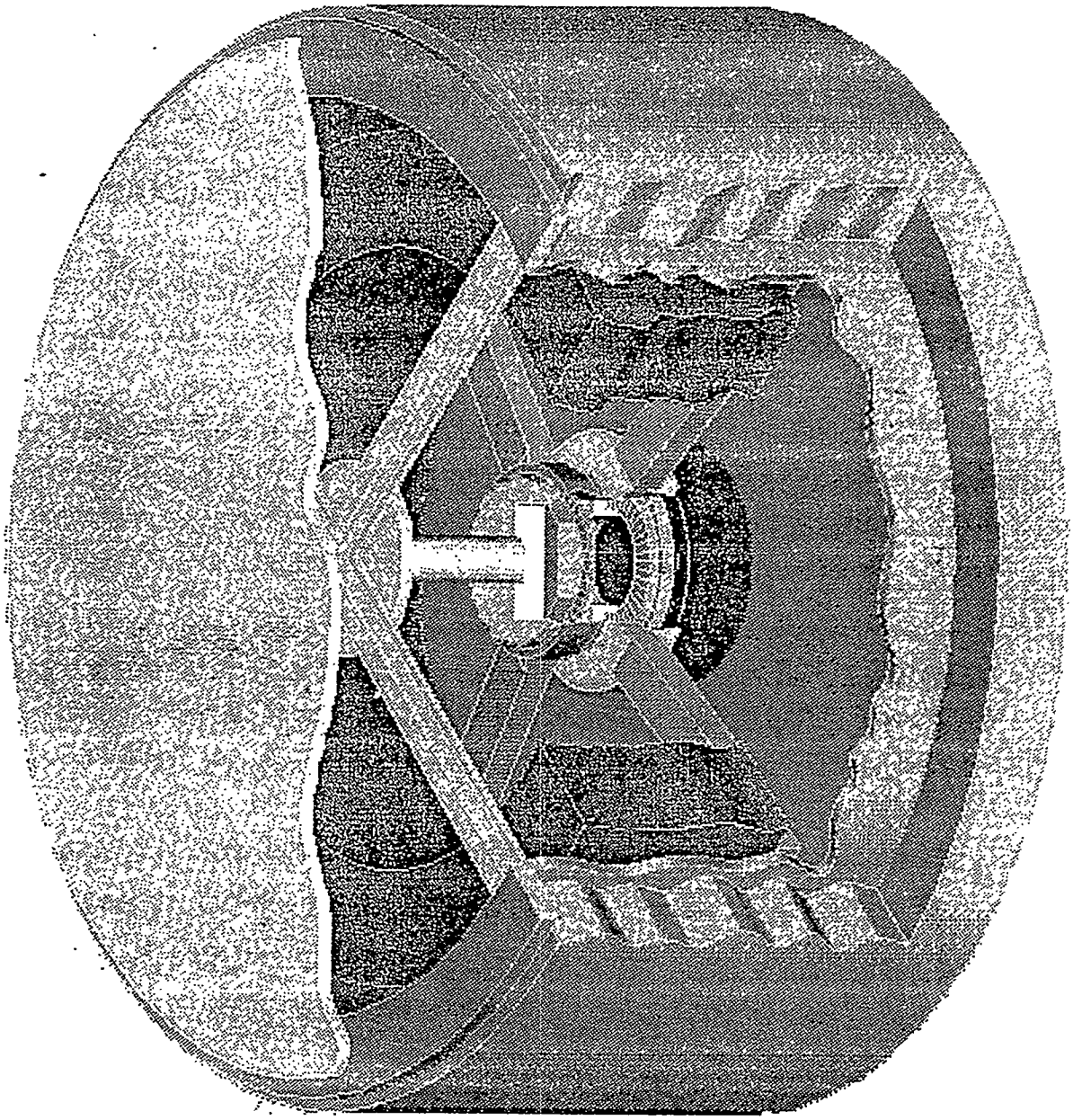

Flywheel Energy vs. Inner Radius

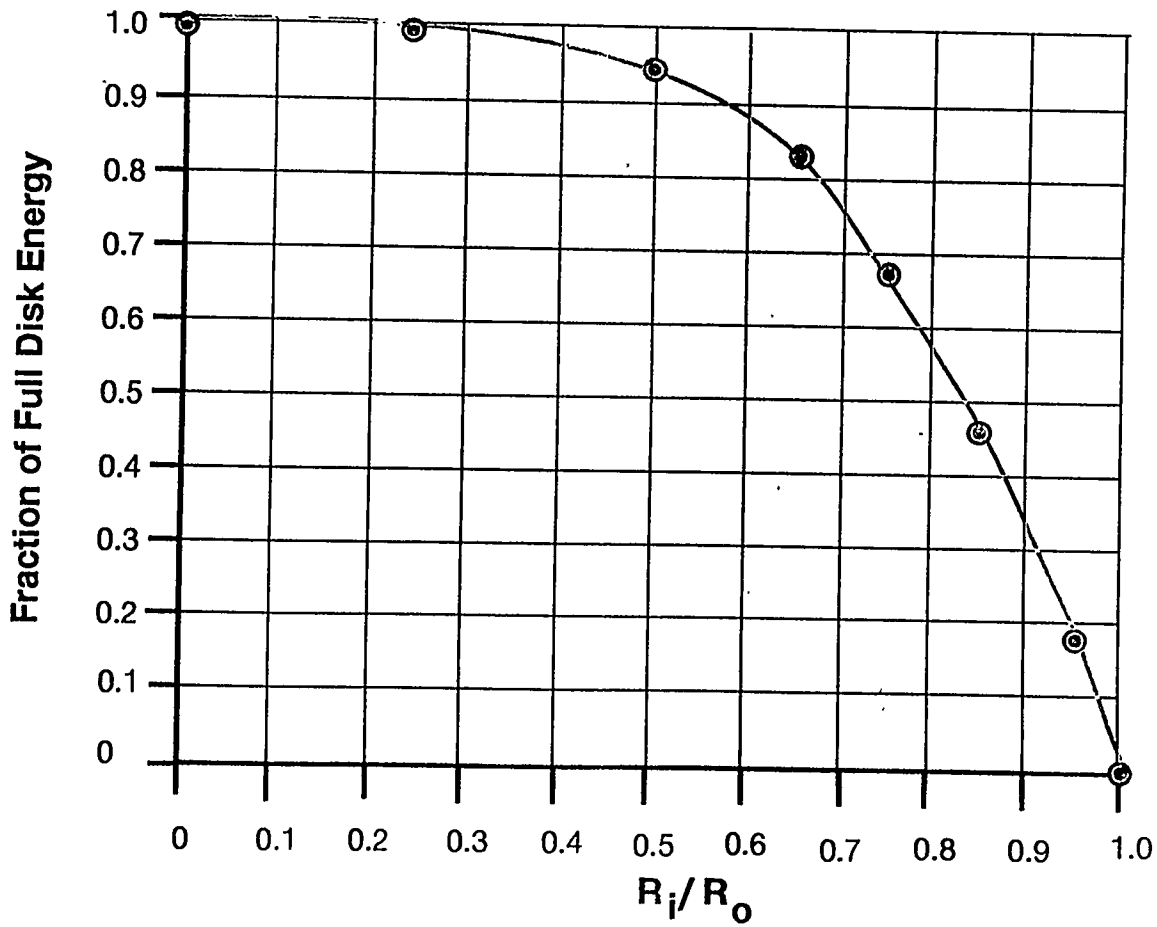

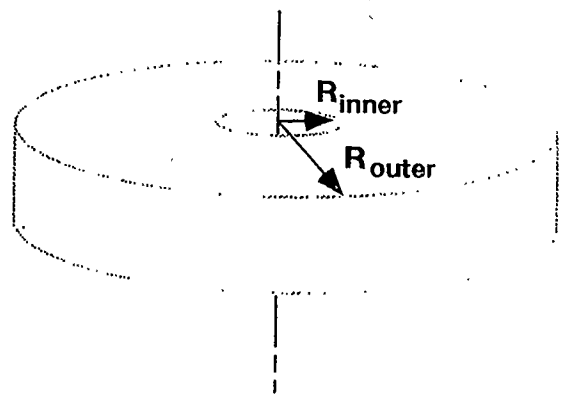

Flywheel Energy Density & Weight

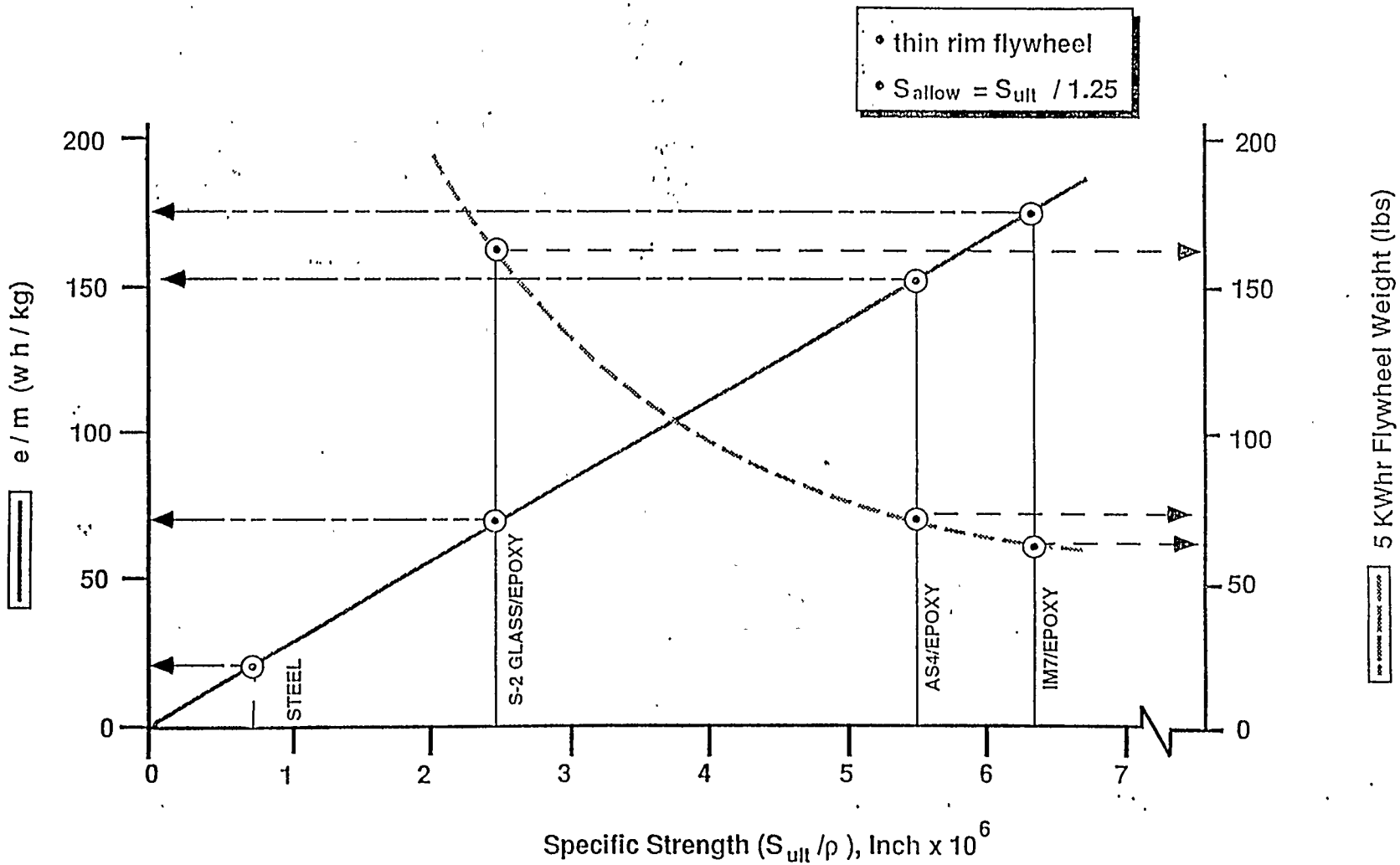

High Strength Material Critical for Reasonable Weight / Size

Strain Vs Radius
66 Inch Radius T700 Flywheel

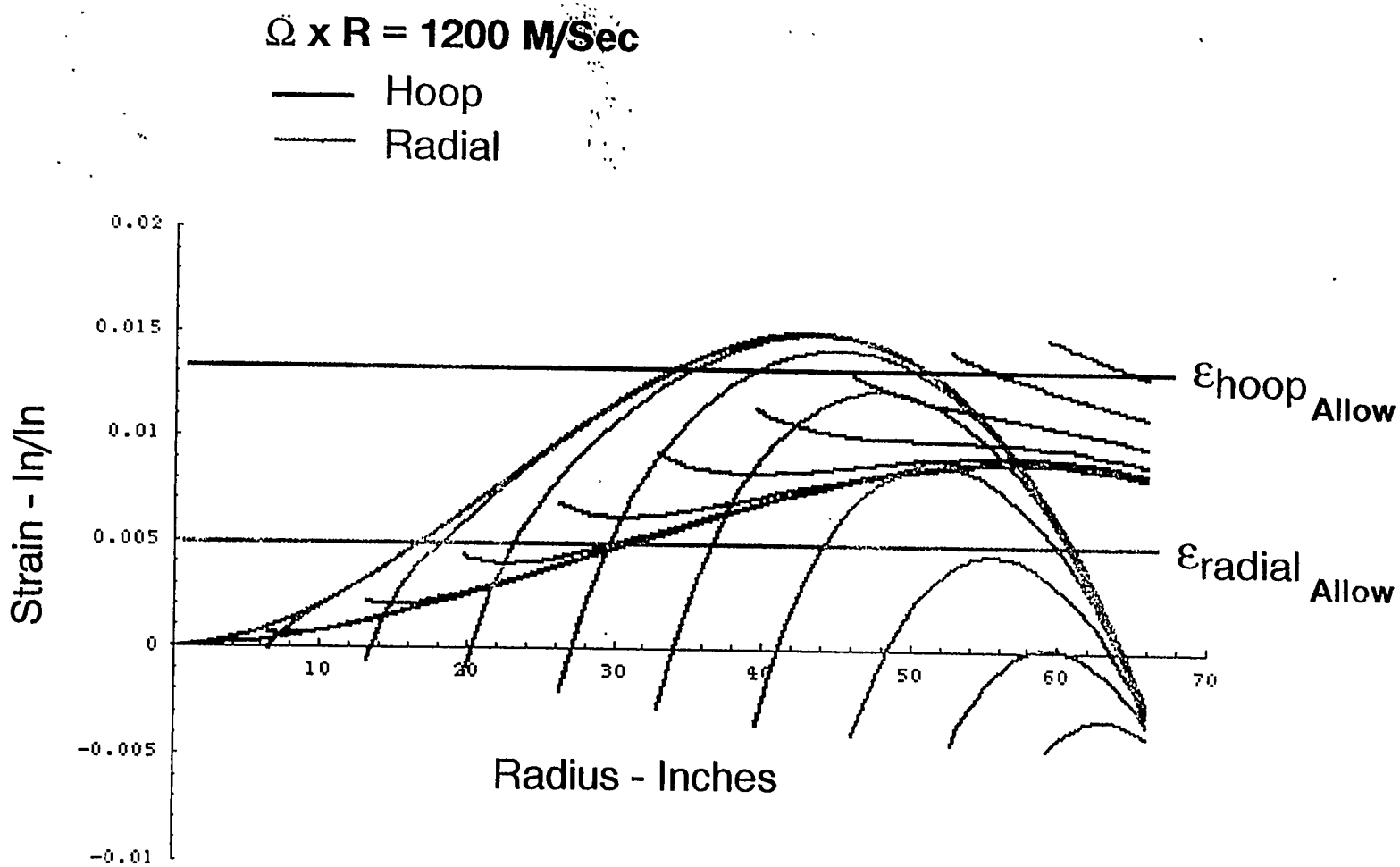

High Temperature Superconducting Magnets - Applicable to Magnetic Flywheel Suspension

- Development of High Temperature Superconducting Magnets has been supported at Boeing since 1987
- Large single crystals have been developed which have exceedingly good superconducting and mechanical properties at LN_2 temperatures
- When passively interacting with permanent magnets the superconductors provide:
  - Stable restoring force in translation
  - Near-zero torque in rotation, coefficient of friction $<10^{-7}$ (for axisymmetric field, rotating about centerline)
  - Eliminate need for active electromagnetic control system
    - No control system power loss
    - No control system development
    - No control system cost
- Liquid nitrogen temperatures are readily achievable and very low cost when compared with active electromagnet systems

$YBa_2Cu_3O_{7-x}$ Single Crystal

Materials Properties

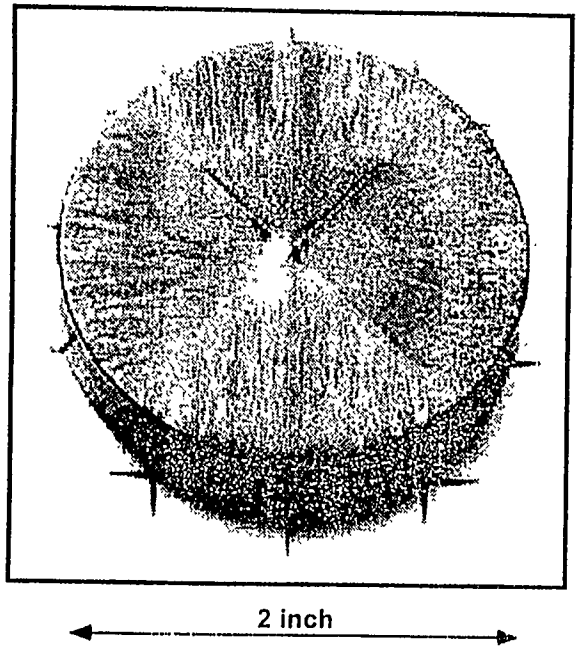

- Single Crystal
- Seeding Growth Technique (123, 211, Pt)
- $J_c = 3 \times 10^4$ Amps/cm^2 at 77K and at 2 Tesla
- $B_T = 0.8$ Tesla per crystal at 77K

Levitation Pressure vs. Trapped Field in YBCO

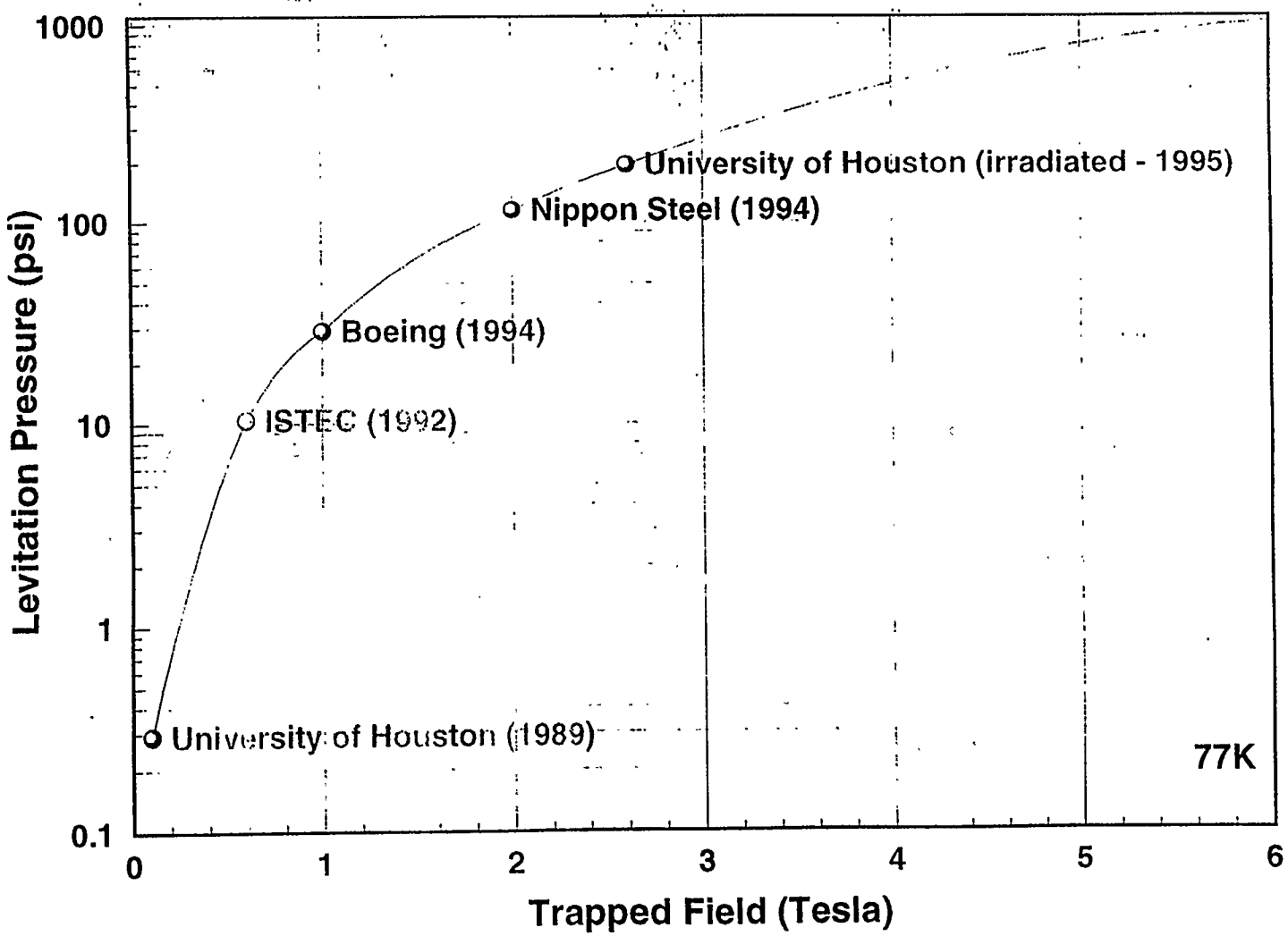

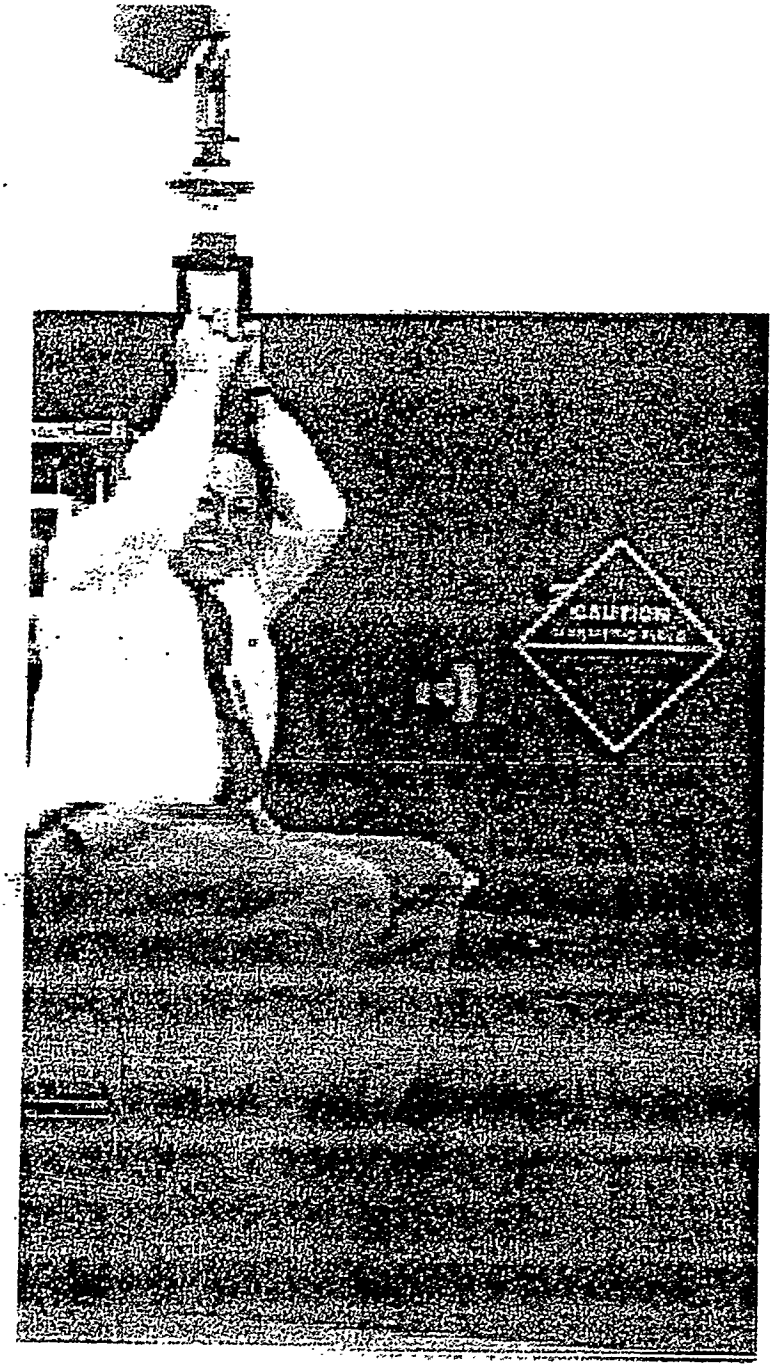
CAUTION

Specific Power Loss in Magnetic Bearings

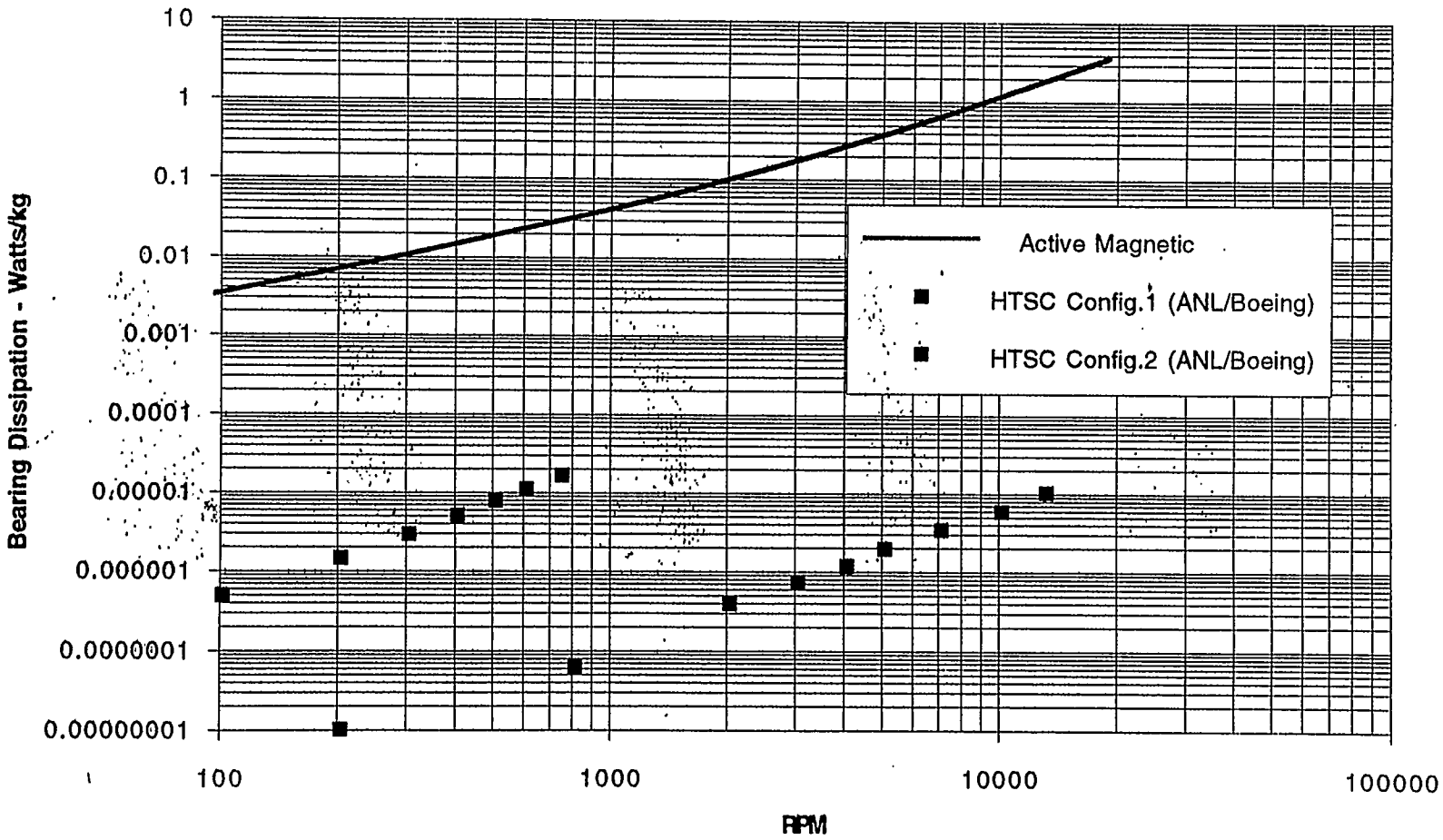

Enhancements With Superconducting Bearings

Active Electromagnetic Bearings	Flux-Trap Superconducting Bearings
• Inductive coupling limits response time and increases power consumption, 1-2% /hr losses (higher with large systems).	• Instantaneous force response < 0.1% /hr losses.
• Very high stiffness values are required for active control, producing critical frequencies within typical operational ranges.	• Low stiffness values can be achieved to enable critical frequencies outside of typical operational ranges.
• Coupling of lateral control forces with vertical and rocking modes results in complex instabilities that can be very difficult to predict and control.	• 3-D instantaneous force response to all instabilities, including unpredictable earthquake spectrums.
• Controls must be smart enough to allow for epicyclic motion while providing magnetic force for rotational stability.	• 3-D instantaneous force response to all modes while accomodating epicyclic motion.
• Changes in component performance with temperature and time must be predicted and compensated for. Reliability questions often prevent use.	• No sensors, no servo systems, no electromagnetic coils. Operational simplicity.

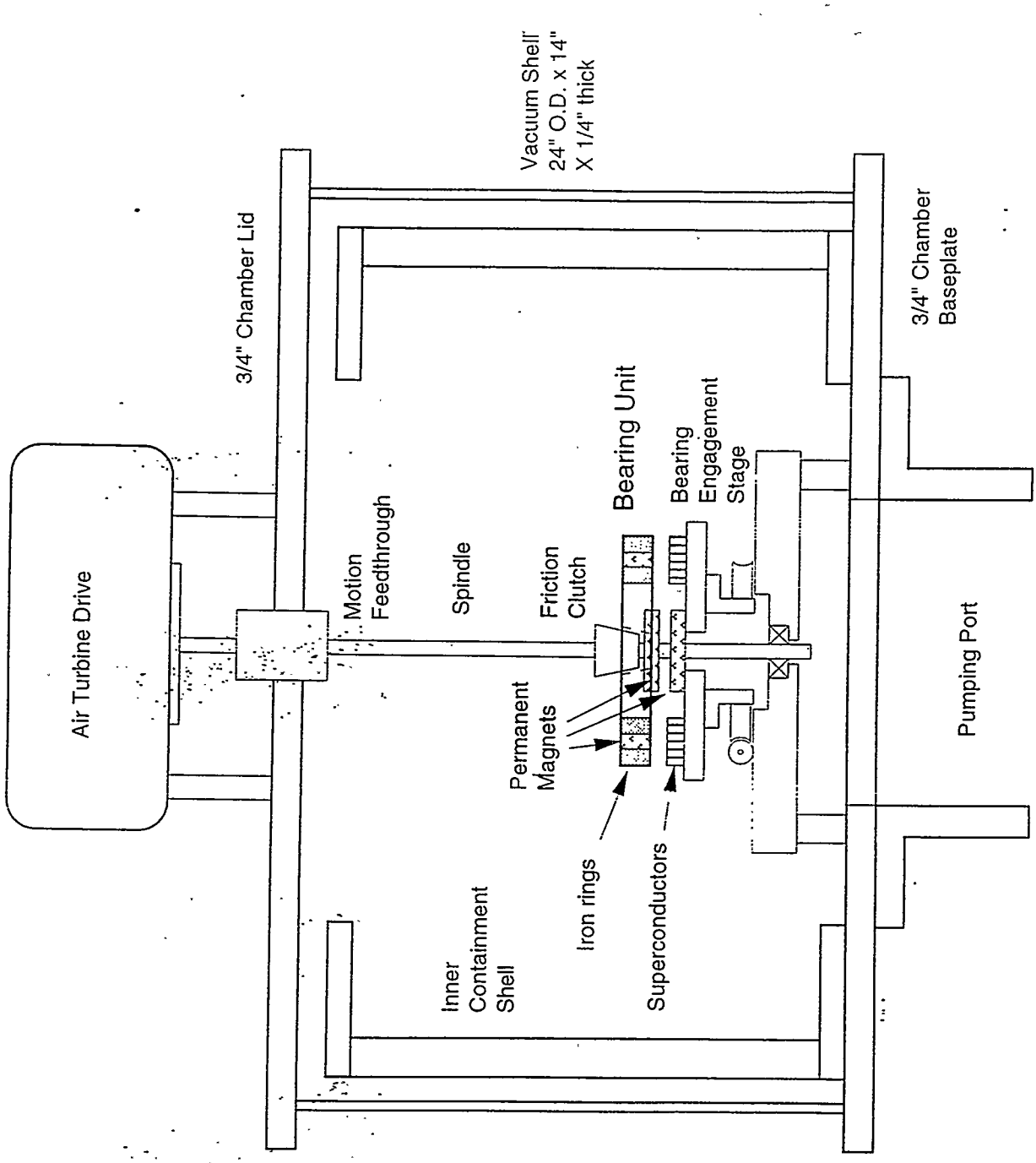
Vacuum Shell
24" O.D. x 14"
X 1/4" thick
3/4" Chamber Lid
3/4" Chamber
Baseplate
Bearing Unit
Bearing
Engagement
Stage
Air Turbine Drive
Motion
Feedthrough
Spindle
Friction
Clutch
Permanent
Magnets
Pumping Port
Iron rings
Superconductors
Inner
Containment
Shell

Summary

- Boeing has developed a unique FESS design
  - solves the radial strain problem
  - energy losses <0.1% / hour
  - scalable from KWhr to MWhr

OAK RIDGE NATIONAL LABORATORY FLYWHEEL ENERGY STORAGE WORKSHOP

EVALUATION OF FLYWHEEL BATTERY FEASIBILITY FOR REPLACEMENT OF ELECTROCHEMICAL BATTERIES AT A UTILITY SUBSTATION

BY

ROBERT S. WEISSBACH
ARIZONA STATE UNIVERSITY

DR. GEORGE G. KARADY
ARIZONA STATE UNIVERSITY

STEPHEN L. STURGILL
SALT RIVER PROJECT

NOVEMBER 1, 1995

PURPOSE

TO INVESTIGATE WHETHER THERE EXISTS A FLYWHEEL ENERGY STORAGE SYSTEM WHICH WILL:

- MEET SPECIFICATION REQUIREMENTS TO REPLACE UTILITY SUBSTATION BATTERIES

AND

- BE COMPETITIVE ON A LIFE-CYCLE AND UP-FRONT COST BASIS

BACKGROUND

SALT RIVER PROJECT UTILITY REQUIRES BACKUP POWER AT THEIR SUBSTATIONS IN THE EVENT DISTRIBUTION SYSTEM POWER IS REMOVED

- OPERATE SWITCHGEAR MOTORS
- COMMUNICATIONS
- CONTROLS AND RELAYS
- LIGHTS, METERS, ETC.

CONVENTIONAL LEAD ACID AND NICKEL CADMIUM BATTERY BANKS ARE EMPLOYED TO PROVIDE THE NECESSARY BACKUP POWER

TWO SETS OF BATTERY BANKS ARE EMPLOYED:

- 48 VOLT DC
- 125 VOLT DC

THERE EXIST APPROXIMATELY 125 OR MORE SUBSTATIONS WHICH USE THE 48 VOLT SYSTEM

ANOTHER DOZEN OR MORE USE THE 125 VOLT SYSTEM

EACH BATTERY BANK IS SUPPLIED FROM A SINGLE PHASE AC-DC BATTERY CHARGER

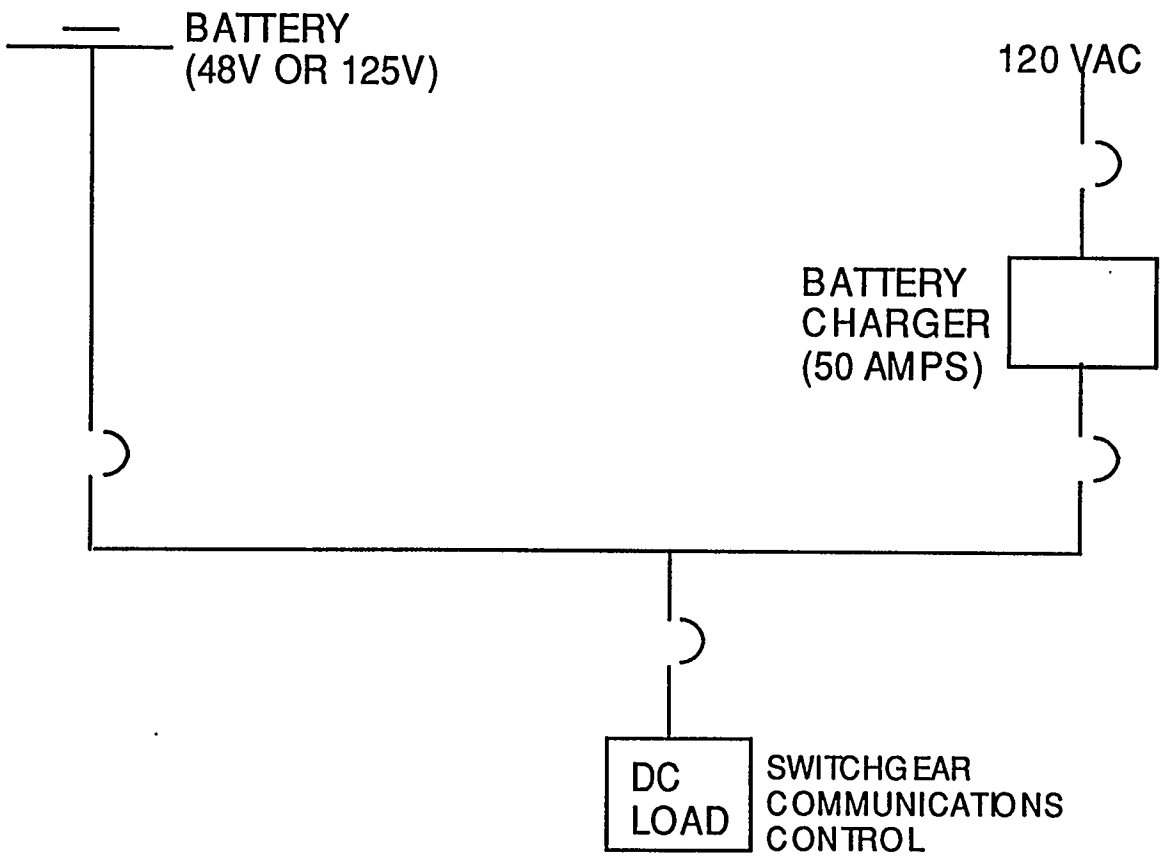

ARIZONA STATE UNIVERSITY

10/24/95 P6

THE BATTERY BANKS ARE REQUIRED TO MEET THE FOLLOWING MOMENTARY LOAD REQUIREMENTS FOR UP TO 30 SECONDS

- 48 VOLT BANK - 26.1 KW
- 125 VOLT BANK - 30.9 KW

THIS MOMENTARY LOAD IS REQUIRED TWICE:

- WHEN DISTRIBUTION SYSTEM POWER IS LOST
- WHEN DISTRIBUTION SYSTEM POWER RETURNS

THE BATTERY BANKS ARE ALSO REQUIRED TO MEET THE FOLLOWING CONTINUOUS LOAD REQUIREMENTS FOR UP TO 8 HOURS

- 48 VOLT BANK - 0.6 KW
- 125 VOLT BANK - 5.0 KW

THE ENERGY REQUIRED FOR EACH SYSTEM MAY THEN BE APPROXIMATED

- 48 VOLT BANK - 4.8 KW-H
- 125 VOLT BANK - 40 KW-H

ARIZONA STATE UNIVERSITY HAS CONTACTED A NUMBER OF MANUFACTURERS IN AN EFFORT TO DETERMINE WHETHER THERE EXISTS A FLYWHEEL ENERGY STORAGE SYSTEM CAPABLE OF SATISFYING THESE SPECIFICATION REQUIREMENTS

FLYWHEELS OFFER THE FOLLOWING ADVANTAGES OVER BATTERY BANKS

- INSENSITIVE TO ENVIRONMENTAL CONDITIONS
- NO HAZARDOUS DISPOSAL CONCERNS
- HIGHER ENERGY AND POWER DENSITY
- LESS OF A MAINTENANCE CONCERN

SALT RIVER PROJECT AND ARIZONA STATE UNIVERSITY CONSIDER THIS APPLICATION TO BE LESS TECHNICALLY CHALLENGING THAN OTHER PROPOSED FLYWHEEL APPLICATIONS

- ELECTRIC VEHICLE APPLICATION - FLYWHEEL IS SUBJECT TO MOTION STRESSES
- LOAD LEVELING - HIGH ENERGY AND POWER REQUIRED
- POWER QUALITY - LESS ENERGY BUT MORE POWER IS REQUIRED

SALT RIVER PROJECT INCLUDES A TRAINING SUBSTATION WHICH MAY BE UTILIZED FOR FIELD TESTING THE INSTALLED SYSTEM

THE SURVEY INDICATES THAT A NUMBER OF MANUFACTURERS ARE MAKING PROGRESS

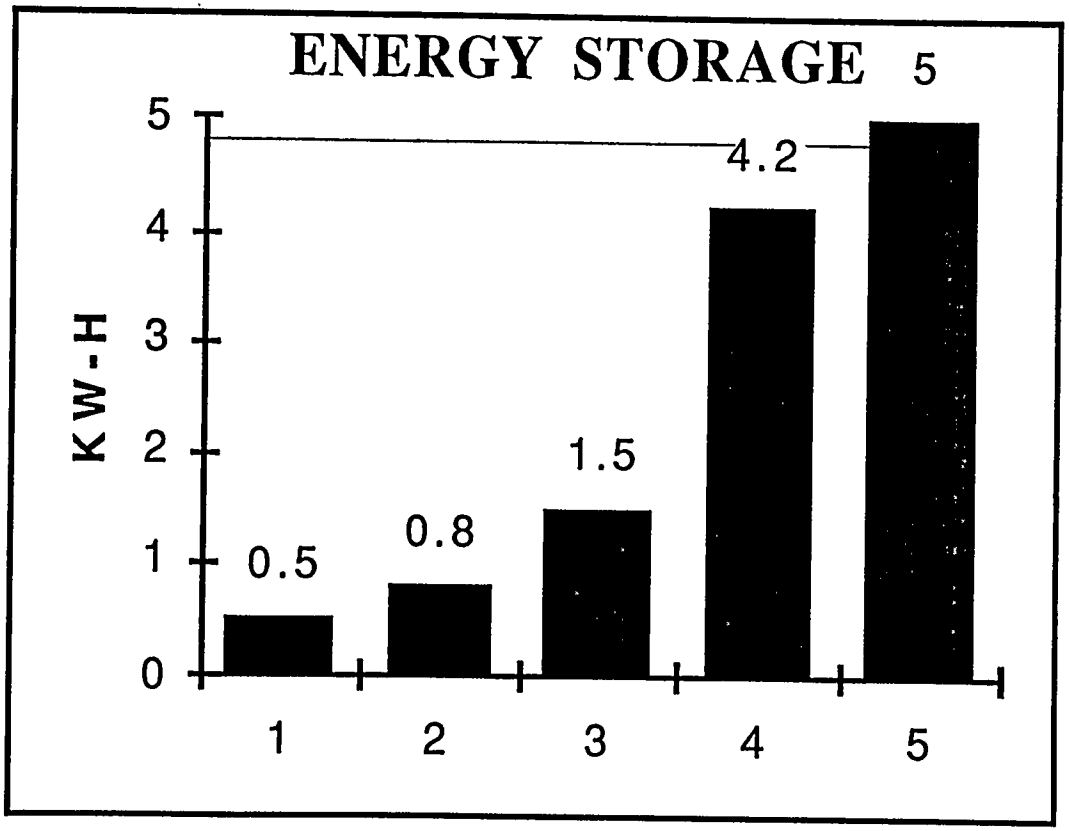

ARIZONA STATE UNIVERSITY

THE SURVEY INDICATES THAT A NUMBER OF MANUFACTURERS ARE MAKING PROGRESS (CONT)

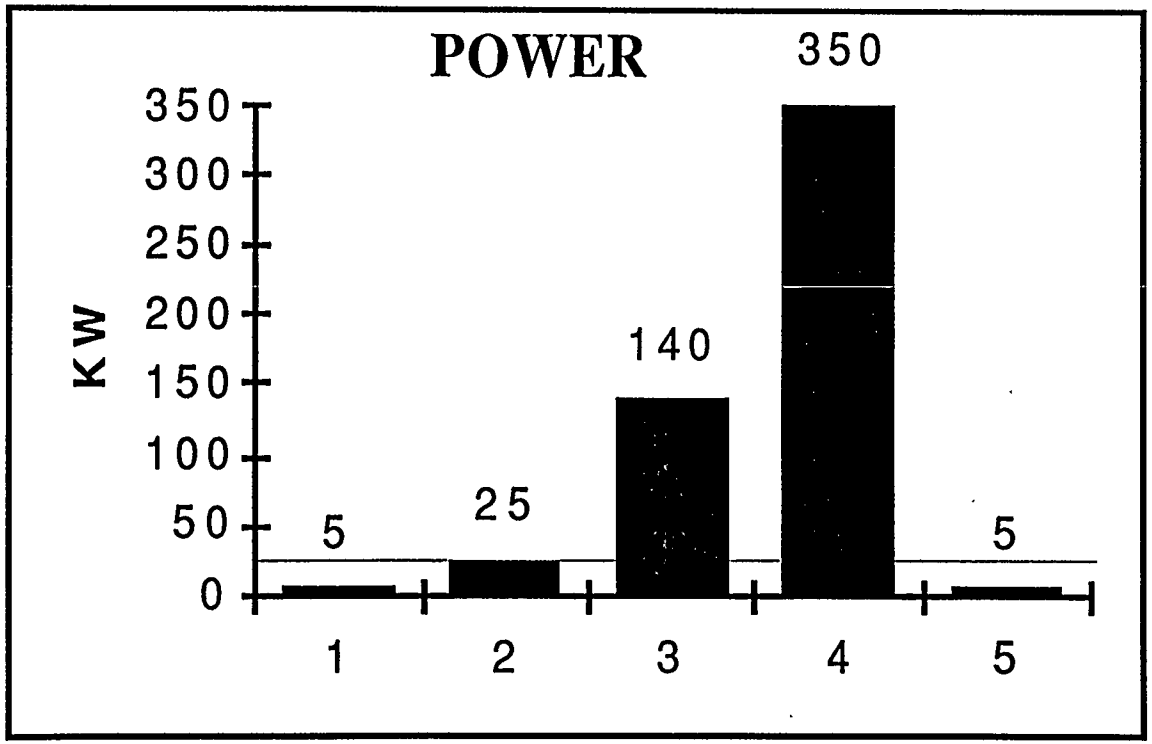

ARIZONA STATE UNIVERSITY

SIMILARITIES EXIST WITHIN EACH DESIGN

- ALL OF THE DESIGNS INCORPORATE A COMPOSITE FLYWHEEL. GRAPHITE TENDS TO BE THE MATERIAL OF CHOICE.
- ALL OF THE DESIGNS INCORPORATE A PERMANENT MAGNET MOTOR/GENERATOR
- ALL OF THE DESIGNS INCLUDE A VACUUM ENCLOSURE TO REDUCE WINDAGE LOSSES

SIGNIFICANT DIFFERENCES EXIST IN THE BEARING DESIGN

- SUPERCONDUCTING
- PASSIVE ONLY
- PASSIVE AND ACTIVE
- ACTIVE

A FLYWHEEL ENERGY STORAGE SYSTEM MAY BE INSTALLED WITHOUT IMPACTING THE BATTERY CHARGER OR DC LOAD

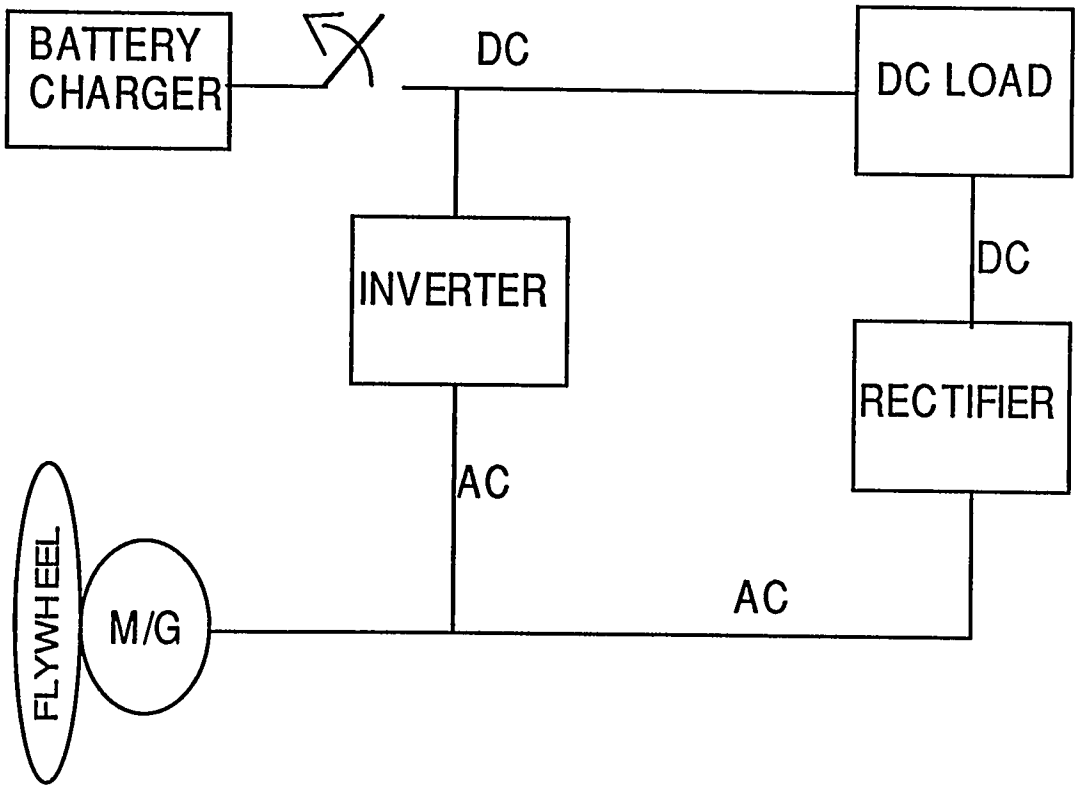

ARIZONA STATE UNIVERSITY

10/24/95 P19

TWO POTENTIAL DRAWBACKS TO THIS APPLICATION HAVE ARISEN

(1) THE REQUIRED CURRENT DURING MOMENTARY OPERATION REQUIRES DEVICES WITH LARGE CAPACITY

THE REQUIRED CURRENT IS 544 AMPS FOR THE 48 VOLT SYSTEM, BASED ON A 26.1 KW MOMENTARY LOAD

TWO POTENTIAL DRAWBACKS TO THIS APPLICATION HAVE ARISEN (CONT)

(2) THE MOTOR/GENERATOR BECOMES SEVERELY UNDERLOADED IF USED DURING BOTH MOMENTARY AND CONTINUOUS OPERATION

IF THE MOTOR/GENERATOR IS RATED FOR 26.1 KW, THEN DURING CONTINUOUS OPERATION AT 0.6 KW, THE MOTOR/ GENERATOR WILL BE RUNNING AT 2.3% OF ITS RATED CAPACITY

THE LIFE CYCLE COST FOR A 48 VOLT BATTERY BANK IS $3500

- $2500 PURCHASE COST
- $1000 MAINTENANCE COST (ASSUMES 2% OF PURCHASE PRICE GOES TO MAINTENANCE EACH YEAR OVER THE 20 YEAR REQUIRED BATTERY LIFE)

HOWEVER, SRP BATTERY BANKS HAVE BEEN KNOWN TO REQUIRE REPLACEMENT WITHIN 20 YEARS, WHICH INCREASES THE LIFE CYCLE COST

THE COST TO DESIGN, MANUFACTURE AND TEST A FLYWHEEL ENERGY STORAGE SYSTEM REMAINS HIGH

- ROUGH ORDER OF MAGNITUDE COST IS SEVERAL HUNDERED THOUSAND DOLLARS FOR ONE UNIT
- MANUFACTURERS HAVE NOT RAMPED UP TO MASS PRODUCTION YET

A NUMBER OF MANUFACTURERS HAVE ALSO EXPRESSED CONCERN WITH PURSUING UTILITY APPLICATIONS

- UTILITIES DO NOT HAVE A UNIFIED SET OF REQUIREMENTS
- MANUFACTURERS WANT TO "WAIT AND SEE" WHAT HAPPENS WITH UTILITY DEREGULATION

CONCLUSIONS

- MANUFACTURERS ARE MAKING PROGRESS TECHNICALLY AND IT IS ONLY A MATTER OF TIME BEFORE A MANUFACTURER WILL MEET SPECIFICATION REQUIREMENTS
- THE COST OF A SYSTEM WILL REMAIN HIGH UNTIL MASS PRODUCTION OF A SYSTEM COMMENCES
- THE UTILITY SUBSTATION BACKUP POWER APPLICATION MAY BE AN EXCELLENT TESTING GROUND FOR A FLYWHEEL ENERGY STORAGE SYSTEM

Flywheels for Spacecraft Energy Storage and Attitude Control

Christian M. Harris
(310) 814-8759
Senior Staff Engineer, Avionics Systems Center

TRW Space & Electronics Group
Redondo Beach, CA 90278

November 1, 1995

R1

Objectives

- What is spacecraft attitude control?
- How can energy storage flywheels be applied to spacecraft attitude control?
- What are the benefits to spacecraft?
- What are flywheel design issues for attitude control applications?
- Summary

R2

What Is Spacecraft Attitude Control?

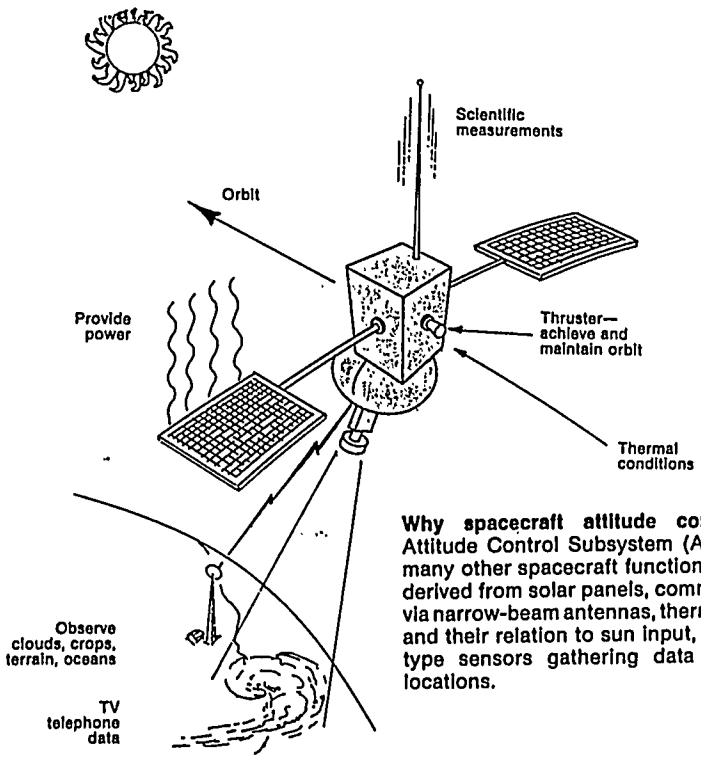

Why spacecraft attitude control? The Attitude Control Subsystem (ACS) affects many other spacecraft functions: power as derived from solar panels, communications via narrow-beam antennas, thermal controls and their relation to sun input, observation type sensors gathering data at specific locations.

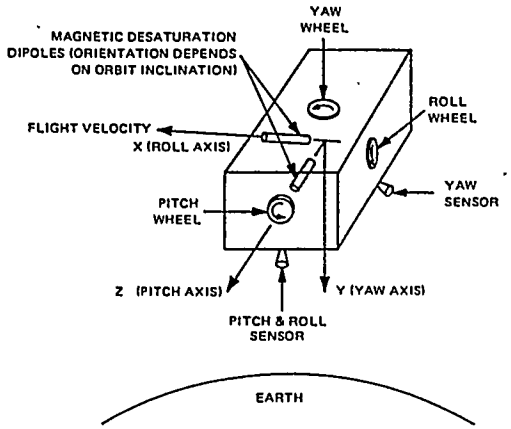

Three-axis control system with control wheels provides versatile and precise active pointing.

Environmental Disturbance Torques:

- Aerodynamic
- Gravity-Gradient
- Magnetic
- Solar Pressure

R3

Flywheels Applied To Attitude Control

- Current spacecraft attitude control systems use "reaction/ momentum wheels" exclusively for angular momentum storage and control torques.

- Energy storage flywheels can also provide attitude control momentum storage and control torques if appropriately arranged on spacecraft structure

- Energy storage flywheels cannot disturb spacecraft pointing performance during charge, discharge, or steady-state operations

R4

Typical Satellite Configurations For Energy Storage & Attitude Control

TRW
Space & Electronics Group
Redondo Beach, CA 90278

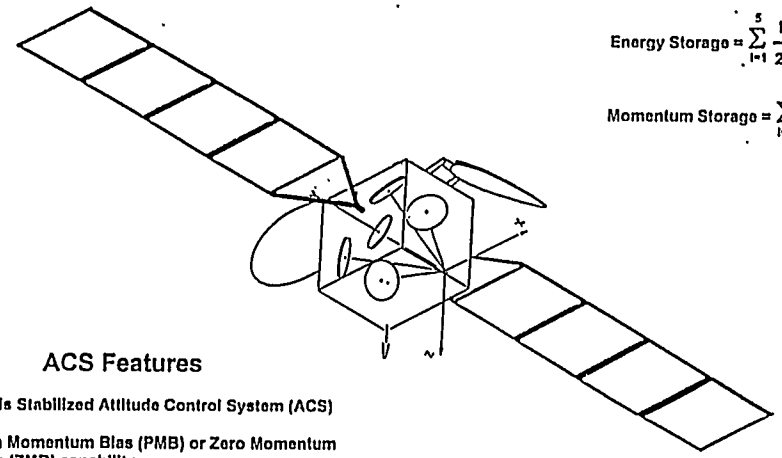

$$\text{Energy Storage} = \sum_{i=1}^{5} \frac{h_i^2}{2\, I_{wheel}}$$

$$\text{Momentum Storage} = \sum_{i=1}^{5} \overline{h}_i$$

ACS Features

- 3-Axis Stabilized Attitude Control System (ACS)
- Pitch Momentum Bias (PMB) or Zero Momentum Bias (ZMB) capability
- Single Fault Tolerant (4 of 5 wheels required for energy/momentum storage)

Body-Fixed Wheels

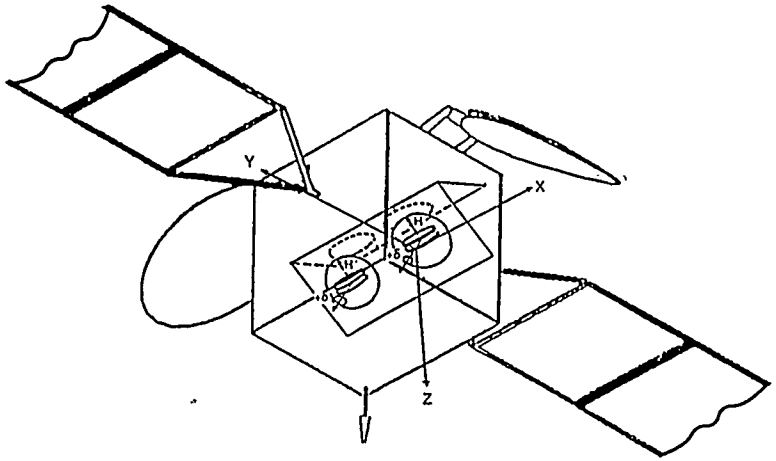

Gimballed Wheels (CMGs)

Preliminary Concepts for Combined Energy/Momentum Storage

TRW
Space & Electronics Group
Redondo Beach, CA 90278

- Minimum of 4-DOF required: energy is a scalar (1-DOF) and momentum is a vector (3-DOF)
- Degrees-of-freedom (DOF) are attained by varying the flywheel speeds and/or gimballing their spin axes
- Many candidate flywheel arrangements exist that provide the required 4-DOF
- At least 2 flywheels required to get 4-DOF.

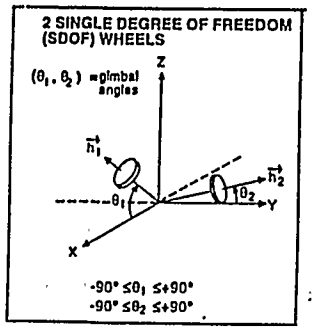

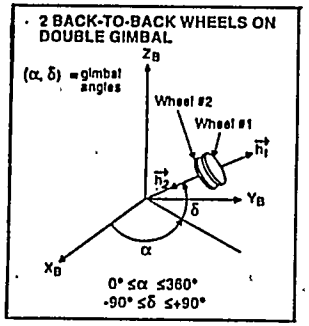

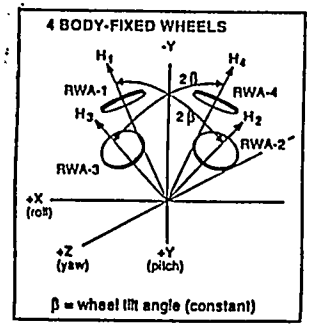

Flywheel Configuration Trade Matrix

Flywheel Configuration	Number of Mechanisms Required for Single Fault Tolerance	Advantages	Disadvantages
Single-Gimbal Flywheels	3 Flywheels 3 Gimbal Drives	o Minimum number of flywheels o Simple gimbal arrangement	o High gimbal rates when system momentum vector is near z-axis (i.e, gimbal lock condition) o Energy and momentum storage are more coupled than for double-gimbal configuration.
Double-Gimbal Back-To-Back Flywheels	4 Flywheels 4 Gimbal Drives	o Conceptually straightforward o Energy and momentum storage are more decoupled than for single-gimbal configuration.	o High gimbal rates when system momentum vector is near z-axis (i.e, gimbal lock condition) o More complex gimbal arrangement o Maximum number of mechanisms (i.e, reliability and cost impacts)
Body-Fixed Flywheels	5 Flywheels	o Minimum number of mechanisms o No gimbals are required (i.e, no gimbal-lock problems) o Easiest control law mechanization due to linear transformation from wheel-space to body-space.	o Maximum number of flywheels

Flywheel System Hardware Architecture

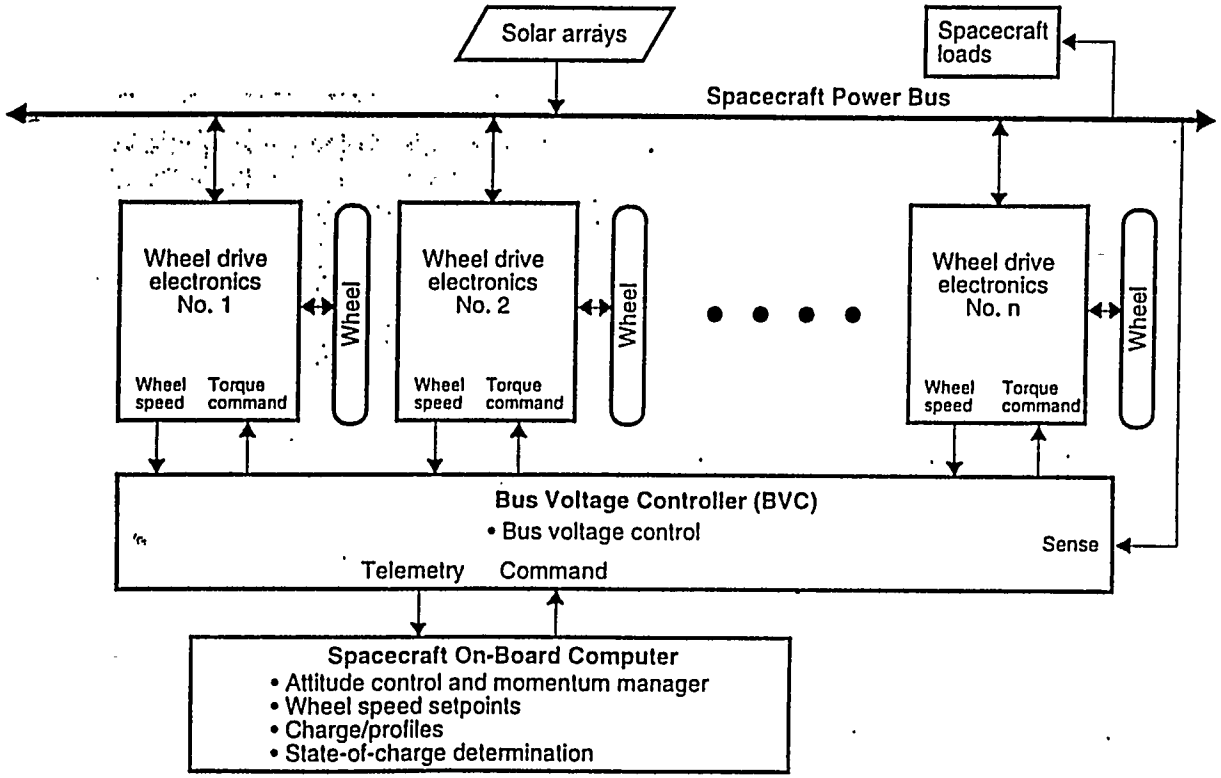

Flywheel Benefits For Spacecraft Application

TRW
Space & Electronics Group
Redondo Beach, CA 90278

- Significant weight reduction by combining energy storage and attitude control functions (eliminate batteries, reaction wheels, and support electronics)
- Greatly improves spacecraft real-estate availability by eliminating battery placement problems (thermal requirements)
- Higher overall system energy conversion efficiency
- Potential spacecraft cost and manufacturing schedule reductions once space flywheels are available as "off-the-shelf" components

Flywheel Issues For Attitude Control

Issue	Key ACS Parameters
Flywheel Momentum & Torque Capacity	3-axis Momentum Storage & Control Torque Envelopes
Number of Flywheels	Redundancy/Fault Management
Flywheel High-Freq. Disturbances	Payload Line-of-Sight pointing stability (jitter response)
Gimballed or Body-Fixed Flywheels	Spacecraft Slew Acceleration & Rates

TDRS Spacecraft Example - Flywheels

TDRS Hardware	Weight (lbs)	Energy Output @ 50% DOD (Watt-hr)
Electrical Power S/S	*298.6*	*1728*
N-Cd Batteries (2)	298	1728
Battery Reconditioning	0.6	N/A
Attitude Control S/S	*75.2*	*0*
Reaction Wheels (4)* (20 fps @3100 RPM)	75.2	0
Hardware Totals:	*373.8*	*1728*

*Attitude control (PMB) requires 2 of 4 reaction wheels.

Flywheel Hardware	Weight (lbs)	Energy Output @ 75% DOD (Watt-hr)
Electrical Power Hardware	*223*	*1800*
UTRC Flywheels (4)*	223	1800
Attitude Control Hardware	*0*	*0*
Hardware Totals:	*223*	*1800*

* Combined energy storage and attitude control (PMB) requires 3 of 4 flywheels. Each flywheel delivers 600 Watt-Hr usable energy over 17,500 - 35,000 RPM speed range. Flywheel momentum is 2000 fps @ 35,000 RPM.

- **150 lb. weight savings!**

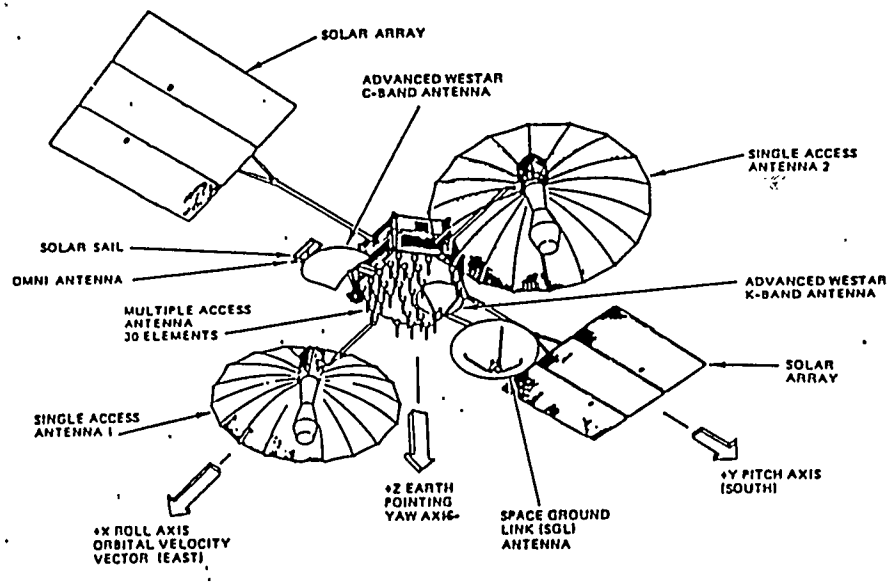

Summary

- Flywheels can provide significant benefits to spacecraft applications by combining energy storage and attitude control functions
- Some attitude control related issues need further study for flywheel applications to spacecraft

TRW

Spacecraft Flywheel System Requirements

James Wehner
Spacecraft Systems Engineering
TRW Space and Technology Division
One Space Park
Redondo Beach, CA, 90278
11/1/95

Introduction

- Flywheel momentum/energy storage systems offer one of the highest benefits of any spacecraft emerging technology
  - Significant weight reduction
    - » $≈40K/lb for launch costs; flywheel systems can save hundreds of pounds
  - Configuration simplification
    - » Batteries present numerous design challenges
      - Thermal control: 0-10C life average temperature (NiH2)
        - Requires preferential "real estate", requires heater power
  - Possible cost reductions and increases in efficiency
- Also many issues associated with flywheel implementation
- Purpose of briefing:
  - This briefing is a Spacecraft Systems Engineers view of unmanned spacecraft design requirements
  - Implementation details will not be addressed (i.e., mechanical vs. magnetic bearings)
  - Requirements addressed roughly chronologically
    - » Pre-launch, launch, nominal operations, other considerations

Launch Timeline

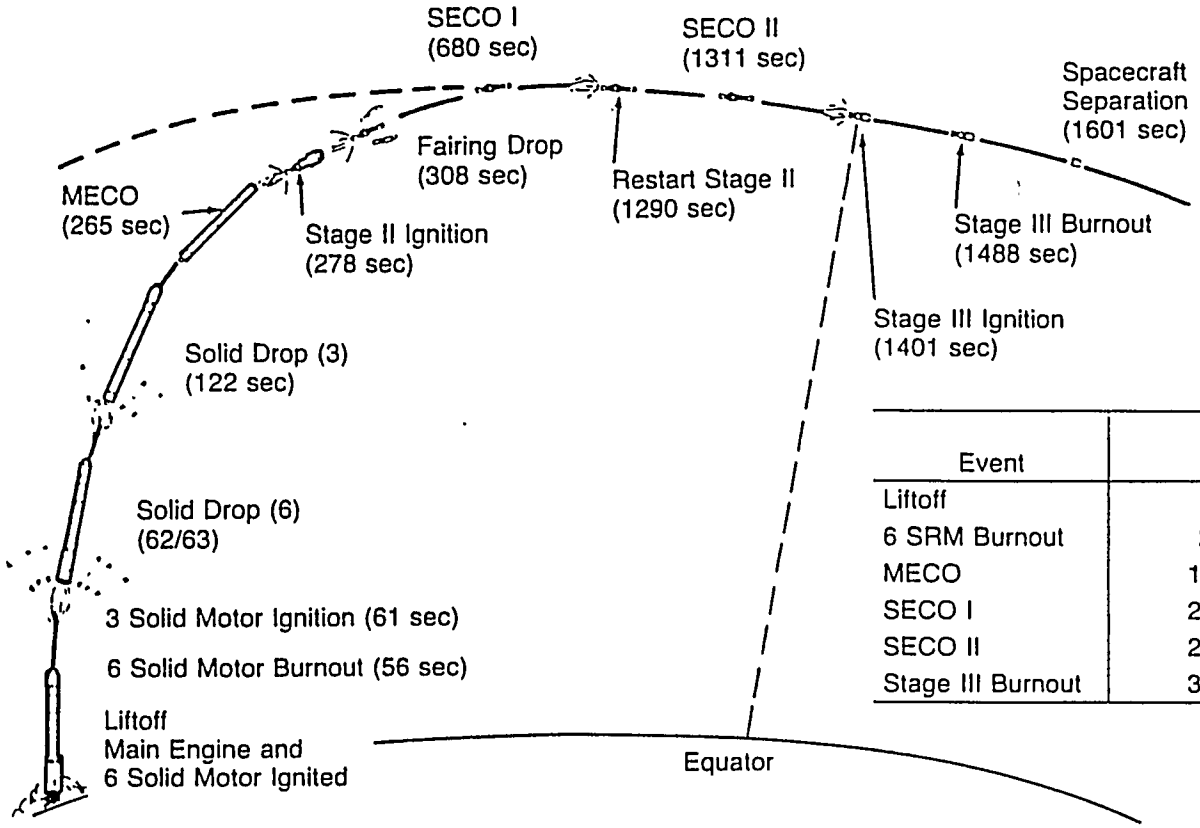

Transfer Orbit Completion (≈12 hours)

Event	V_t (fps)	Acceleration (g's)
Liftoff	1343	1.31
6 SRM Burnout	2826	0.39
MECO	18,701	5.77
SECO I	25,870	0.72
SECO II	26,307	0.80
Stage III Burnout	33,595	4.24

Figure from "Delta II Planners Guide"

TRW

Design Considerations

- Space systems differ substantially from terrestrial applications:
  - Relatively low power (a few kW at most)
  - Very high reliability (long life, no maintenance)
- Near term competitive technology: Li-ion (2-3 x specific power of state-of-the-art NiH2)
  - Space packaged cells under development
- Energy storage implementation:
  - 1 pair of counter rotating wheels
    - » Redundancy requirements are reliability dependent
      - Second pair of wheels, etc.
- Combined energy storage/momentum control
  - Replaces both batteries and reaction wheels, momentum wheels or control moment gyros (CMGs)
  - Numerous implementation options:
    - » Mission specific; reliability dependent
    - » Candidate implementations:
      - Single gimbal wheels: 3 wheels, 3 single axis gimbal drives
      - Double gimbal back-to-back wheels: 3 or 4 wheels, 3 or 4 gimbal drives
      - Body fixed wheels: 5 wheels

TRW

Nature of Requirements

- Requirements which follow are preliminary
  - Substantial differences from program to program
  - "Desires" rather than "hard" requirements
  - Negotiable to some degree
  - Qualification levels
- Attempt to bracket most unmanned systems
  - Low Earth Orbit (LEO) to Geosynchronous Earth Orbit (GEO)
    - » LEO: 100 minute orbit with 30 minutes of eclipse
    - » GEO: 24 hour orbit with 1.2 hr eclipse
    - » Charge while in sun, discharge in eclipse
  - Small satellites to big satellites
  - Operational systems as well as on-orbit demonstrations
  - All mission phases
- Applicable documents
  - MIL-STD-1540C: Test Requirements for Launch, Upper Stage, and Space Vehicles
  - MIL-STD-1541A: Electromagnetic Compatability Requirements for Space Vehicles
  - Individual program environmental and EMI/EMC specifications
    - » Generally less severe than MIL-STDs

Pre-Launch Requirements

Design Parameter	Requirement	Basis/Comments
Transportation Shock	10 g	Truck impulse, max duration of 40 msec, requirements vary based on weight and transportation mode
Handling Shock	Up to 27" vertical drop	Program environmental specification
Air Transport Acceleration	4.5 g	Program environmental specification; direction specific
Ground Operation	**Spin up on launch pad**	**Power desired for launch, transfer orbit, and deployment**
Ground Thermal Control	**-5 to 45C nominal**	**Typical electronics temperatures on-pad; special cooling provisions highly undesirable (current NiH2 designs); self discharge launch time constraints**
Ground Power Dissipation	**Minimal (less than 1/100 of the total energy storage per hour)**	**Trickle charge provisions or thermal control not desired; current NiH2 designs stressing; self discharge launch time contraints**

Launch Phase Requirements

TRW

Design Parameter	Requirement		Basis/Comments
Launch Operation	Operate During Launch		Use of internal spacecraft power simplifies launch vehicle interface; required after LV separation prior to deployment or for transfer orbit; option to vacuum vent on-orbit
Random Vibration	Freq (Hz)	Qual Level	1) Existing program environmental specification (typical), perpendicular to mounting surface
	20	.05 g^2/Hz	6.1 grms acceptance, 12.2 grms qual, parallel to mounting surface
	20 to 40	+9 dB/octave	2) MIL-STD-1540C less severe:
	40 to 140	.4 g^2/Hz	6.1 grms min accept, +6dB qual (12.2 grms)
	140 to 150	+12 dB/octave	.04 g^2/Hz between 150 and 600 Hz
	150 to 300	.5 g^2/Hz	
	300 to 380	-12 dB/octave	Note: Test duration of 1 min acceptance, 3 min qual (1540C)
	380 to 1000	.2 g^2/Hz	
	1000 to 2000	-6 dB/octave	
	2000	.05 g^2/Hz	
	Overall	**19.3 grms**	
Sinusoidal Vibration	Generally superceeded by random vibe		No MIL-STD-1540C requirement; mission specific
Acoustic	Generally superceeded by random vibe		Vibration response not excited by acoustics
Shock	Freq (Hz)	Design=Accept=Qual	
	<200	**40 g**	1) Program specific attenuation; higher at sep plane
	200-1000	**+12 db/octave**	2) No specified MIL-STD-1540C shock levels (system specific)
	1000-5000	**1000 g**	Note: Typical duration of 20 millisec (MIL-STD-1540C)
Temperature (typical program) (MIL-STD-1540C)	Qual (C)	Survival (C)	Note: Survival = turn-on
	65/-20	**65/-29**	Existing program environmental spec. for non-avionics components
	71/-54	Not Defined	MIL-STD-1540C imposes much more stringent requirements
			Note: Possible reasons to impose higher temperatures, depending on energy efficiency and thermal control approach
			Note: Typical qualification ground testing requires ≥20 ambient pressure thermal cycles, and ≥5 thermal vacuum cycles
Launch Maneuvers and Launch Vehicle Tip-Off Rates	Body rotation of 2 deg/sec		Typical launch vehicle separation body rates

Nominal Operations Requirements

Design Parameter	Requirement	Basis/Comments
Life	3 yrs to 15 yrs	Typical GEO spacecraft design lives of 10-15 yrs; slightly lower for LEO; initial on-orbit demo life of 2-3 yrs
Energy Efficiency (Charge/Discharge)	≥.80	Typical NiH2 battery efficiency
Energy Storage Depth of Discharge (DOD)	≥75%	Typical NiH2 GEO battery DOD; 30-40% DOD for LEO orbits
Number of Charge/Discharge Cycles	GEO: 1350	90 days/year, variable DOD
	LEO: 80000	≈16 times/day, fairly consistent DOD
Energy Efficiency (Standby)	≤1/100 of energy storage capacity per hour	NiH2 trickle charge rates of C/100
Load Power Voltage	≈28 +/- ≤6 V	Typical bus voltage; some variability based on power subsystem design; trend to higher voltage; easier secondary power converter design with narrower range
Total Energy Storage Capacity	550 Whr to ≥6200 Whr	Typical NiH2 battery (20 to 220 Ahr at 28V)
Max Discharge Load	200 to 5000 W	Typical battery requirements; min load of 0 W
Max Charge Load	LEO: 100 to 2500 W	Typical LEO battery requirements (C/2)
	GEO: 13 to 333 W	Typical GEO battery requirements (C/15)
Max Step Load Change	≤250 W instantaneous; full charge load to full discharge load in ≤5 sec	Requires computer load maintainence for ≤250W; charge/discharge transition due to LEO eclipse entry/exit and tumble
Max Momentum Storage	At least 1350 N-m-s (1000 ft-lb-s), system dependent	Typical large GEO PMB or LEO ZMB system; LEO smallsat typically 14 nms
Motor Torque (Momentum Control)	.07 to 1.34 N-m (10 to 192 in-oz)	Typical reaction wheel motor torques
Control Moment Gyro Torque (perpendicular to spin axis)	10 N-m (7.4 ft-lb) up to >>340 N-m (250 ft-lb)	System CMG torque requirements highly mission specific
Number of High Rate CMG Slews Over Life	LEO: 3000 to >1,000,000	3 to 320 slews per day; short to long mission life
	GEO: 1000 to >>5000	<1 slew/day to several
Radiation Hardness	100 krad total dose	Typical unit requirement for long life space missions
Reliability	Energy storage only: ≥.99 at 12 yr	EOS single battery (22/24 cells) has .99988 reliability at 6yr
	Combined momentum/energy storage: ≥.98 at 12 yr	Typical 4/3 reaction wheel system has .99 reliability at 12yr
Temperature Limits	Same as launch phase	Temperature limits valid for all in-space situations
Thermal Design	Desire: Radiation coupling to external panels (48C typical max panel temp)	Allows mounting in similar manner to current wheel assemblies; frees up critical external real estate currently used by batteries
	Option: Conduction couple to external panels	No worse than current battery mounting schemes

Other Requirements

TRW

Design Parameter	Requirement	Basis/Comments
Specific Power	Power only: ≥20 Whr/lb	Anticipated specific power of Li-ion battery
	Power and momentum control: ≥15 Whr/lb	Anticipated system weight with Li-ion battery
Envelope	125000 cm^3 (7500 in^3) for 6200 Whr system	Typical NiH2 battery volume; soft requirement
Max Body Rates	≈40 deg/sec	Change in body rate/system momentum due to flywheel failure
Flywheel Authority-to-Proceed to Delivery Timeframe	9 to 12 mo	Current 12-15 mo delivery schedule highly undesireable; program dependent
Materials Outgassing	NASA approved materials list	Spacecraft sensitivity to outgassed contaminants
Total System Cost	Momentum/power: ≤$1.2M	Typical combined wheel/battery costs
	Power: ≤$400K	Typical battery costs
Failure Containment	Non-life threatening failure modes on ground	Avoid ground test safety issues
	Non-catastrophic failure in redundant system	Likely application is combined momentum/energy storage
	Catastrophic failure only acceptable for non-redundant system	Likely application is non-redundant energy storage; loss of mission for single flywheel system; design requires very high flywheel reliability

- **Strawman development schedule: Flight demo launch 3 to 4 years; operational systems 6 to 10 years**
- **Key TRW contacts:**
  - **Spacecraft Systems Engineering: James Wehner (310-814-6825)**
  - **Program Development: Tom Pieronek (310-814-7468)**
  - **Attitude Control: Christian Harris (310-814-8759)**
  - **Electrical Power: Kent Decker (310-813-5947) or Doug Rusta (310-813-0502)**

Thortek's Low Cost
Flywheel Energy Storage Systems

Douglas G. Thorpe, Founder
November 31, 1995

Thortek
P.O. Box 20363
Knoxville, Tennessee 37940
(423) 473-8183

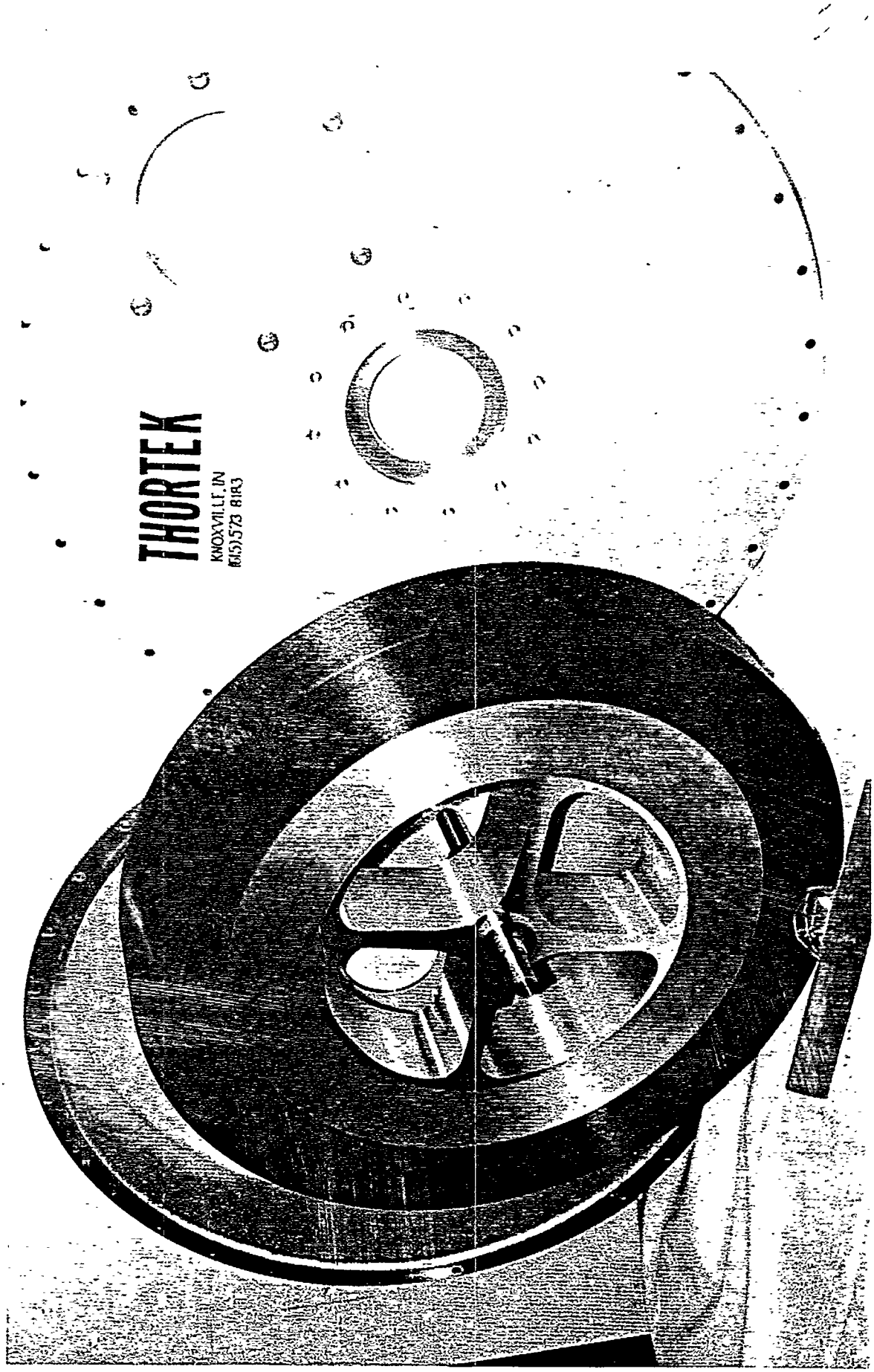

T2

Proof-Of-Concept
FLYWHEEL ELECTRIC BATTERY PROTOTYPE
1,000 Wh, 25 Hp Induction Motor/alternator &
65 Ft-lb Co-axial Gap Magnetic Torque Coupler
Supported by Single-Plane Rotatable Stand

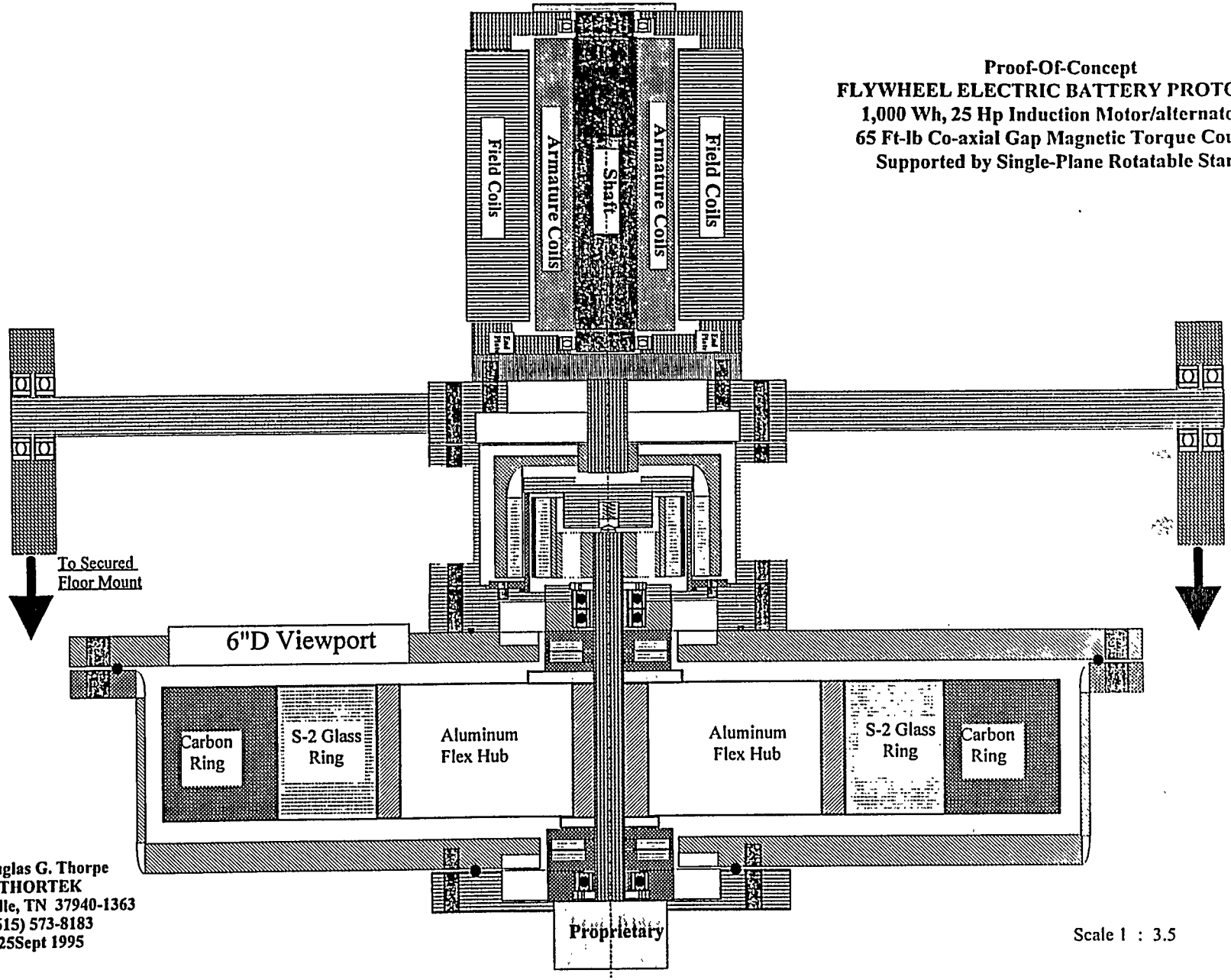

Douglas G. Thorpe
THORTEK
Knoxville, TN 37940-1363
(615) 573-8183
25Sept 1995

Scale 1 : 3.5

Problems and Solutions found for the POC Flywheel Battery

- Mechanical Damping System Not Required; Damping System is built into the Magnetic Bearings
- Face-to-Face Magnetic Torque Coupler produced changing Axial Forces with variable torque; Replaced with Co-Axial Gap MTC
- Membrane to Co-Axial Gap MTC requires very thin, high modulus, non-conducting, non-porous material
- Walls of Vacuum Chamber deflect inward and collapse magbearing airgaps; will be replaced with lighter, rigid VC.

The Goal of the 2nd Generation Flywheel Development Project is to produce a High Performance (65 wh/kg) Composite Flywheel with the Least Cost per energy Storage ($/kwh)

- The Timetable for this project is approximately 14 - 18 months (6 months with appropriate funding)

Thortek FESS Comparisons

	POC FESS	2nd Generation FESS
Energy Storage Capacity	1,333 wh	1,333 wh
Flywheel		
Rotor Weight	38.9 kg / 86 lbs	18 kg / 40 lbs
Rotor Dimensions	24" OD x 3.45" L	17"OD x 5.1" L
Rotor Tip Speed	700 m/s	820 m/s
Rotor Speed Range	22,000 to 11,000 rpm	35,000 to 16,500 rpm
Mass Production Cost	$1,025	$500
Magnetic Bearings		
Magnet Materials	NdFeB grade 35	NdFeB grade 35
Magnet Dimensions	3"OD x 1.3"ID x 0.2"T	3"OD x 1.3"ID x 0.1"T
Total Magnet Weight	596 gm	298 gm
Max. Magnetic Attraction	189 lbs	300 lbs
Power		
Coupler Medium	Magnetic Torque Coupler	TBD
Torque Capacity	65 ft-lbs	65 ft-lbs
Power Capacity	155 hp @ 11 Krpm	225 hp @ 16 Krpm
Output Device	20 hp, 480VAC	75 hp, MVT

Thortek 30Nov95

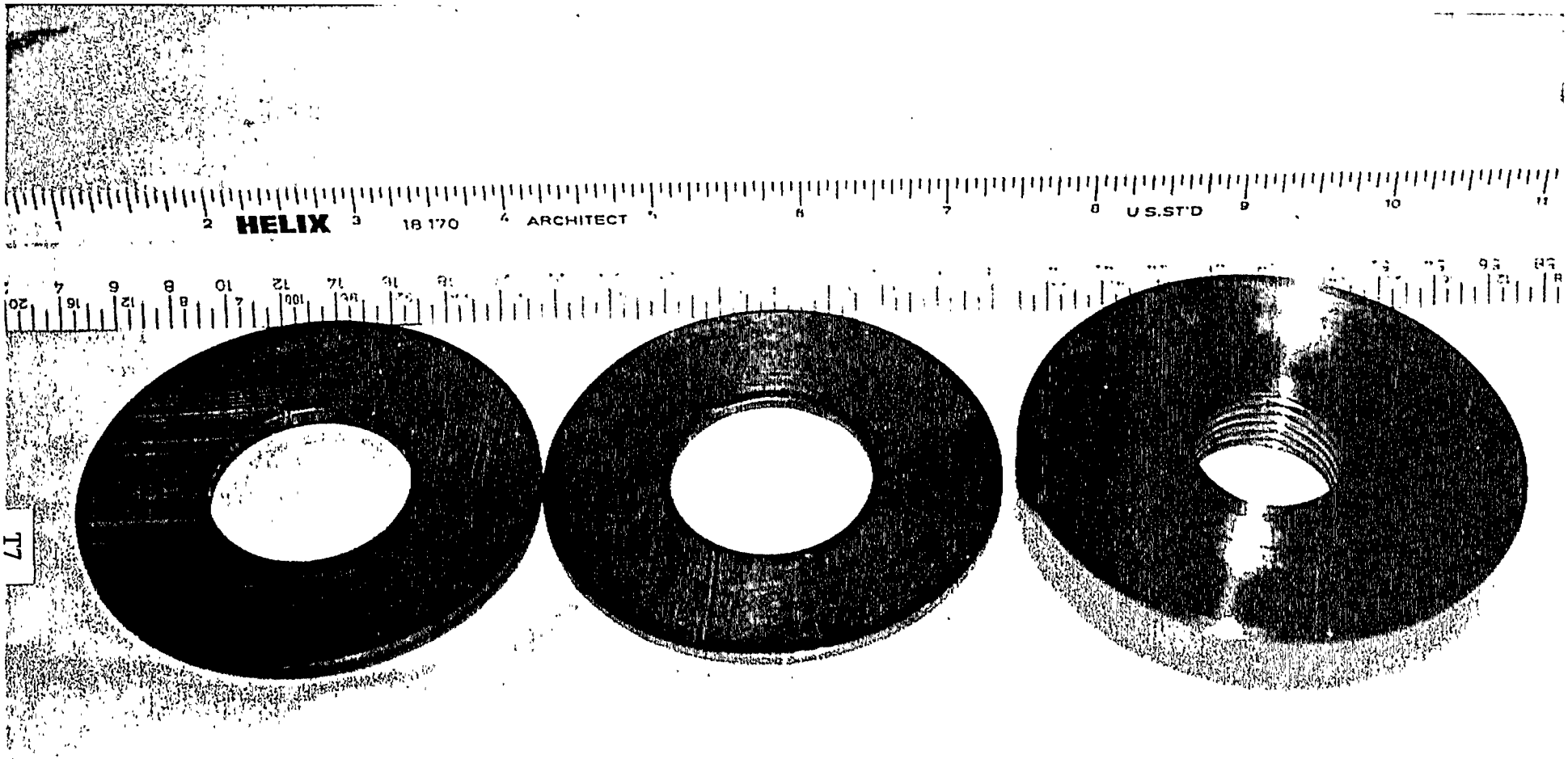

17

Magnetic Attraction vs Airgap

42.8 psi charge, Single Pole Oct95 Lot

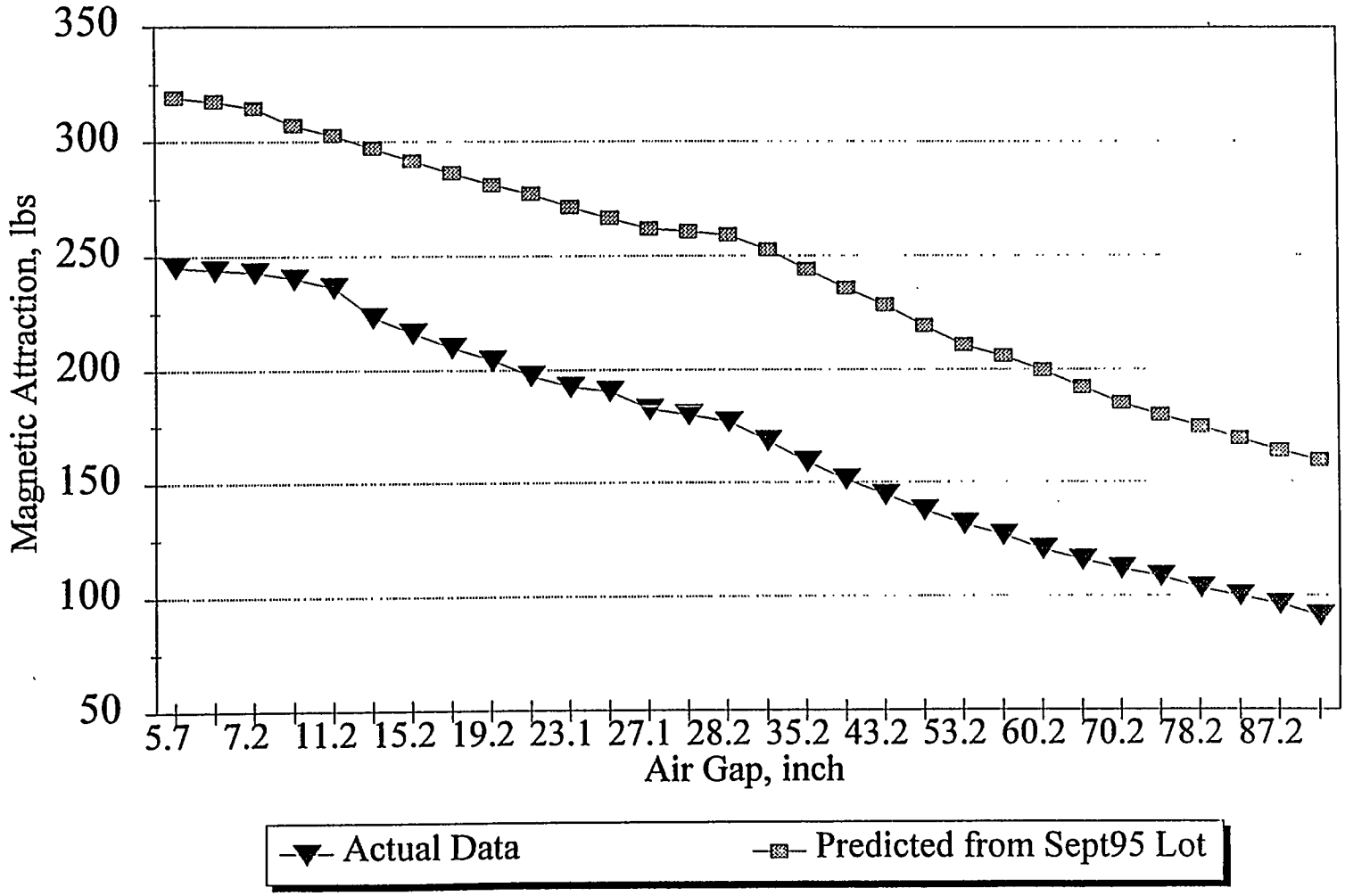

Magnetic Attraction vs Airgap

16.1 psi charge, 2200 Gauss, Sep95 Lot

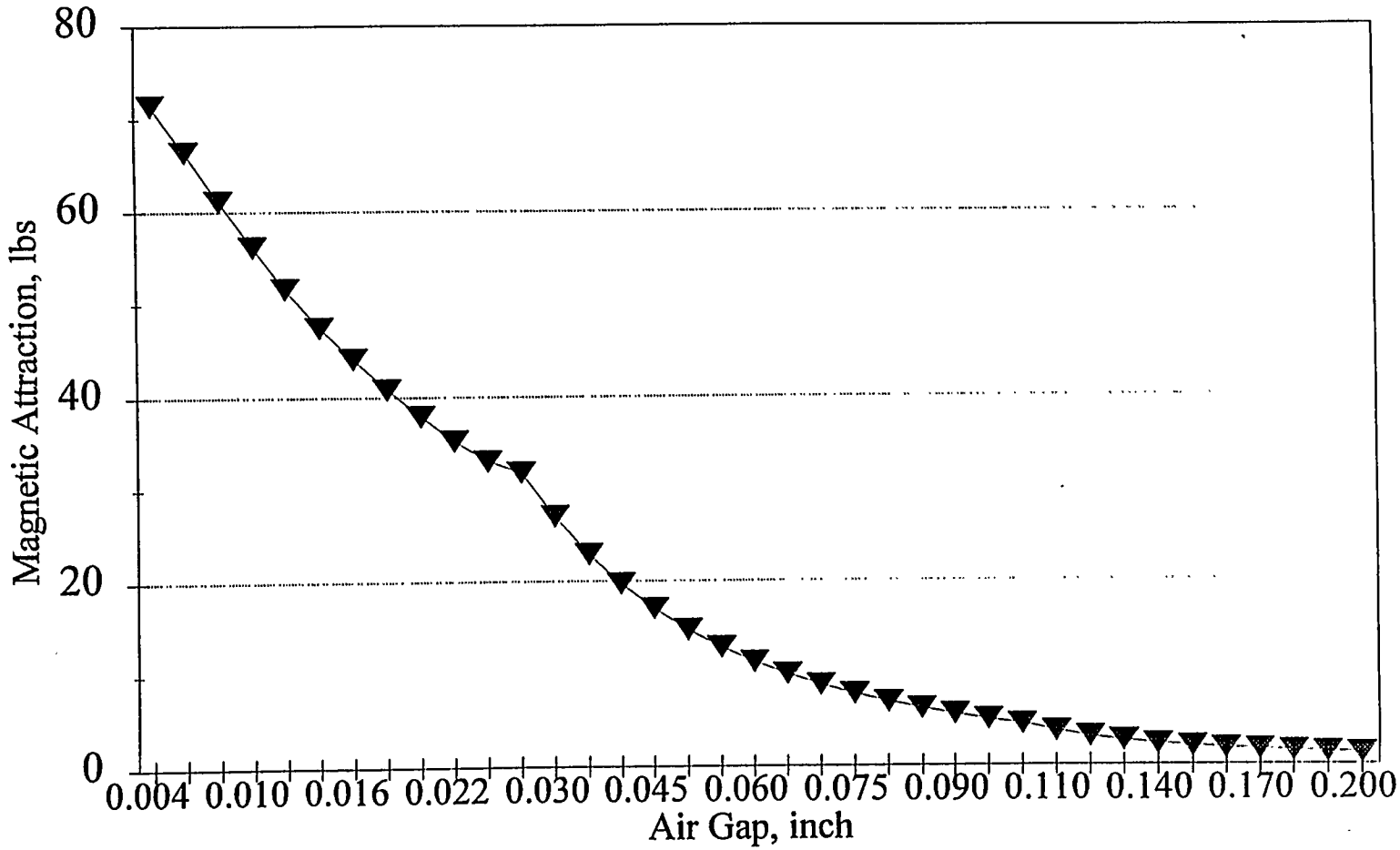

Radial Load vs Airgap & Displacement

16.1 psi, 2200 Gauss, Sept95 Lot

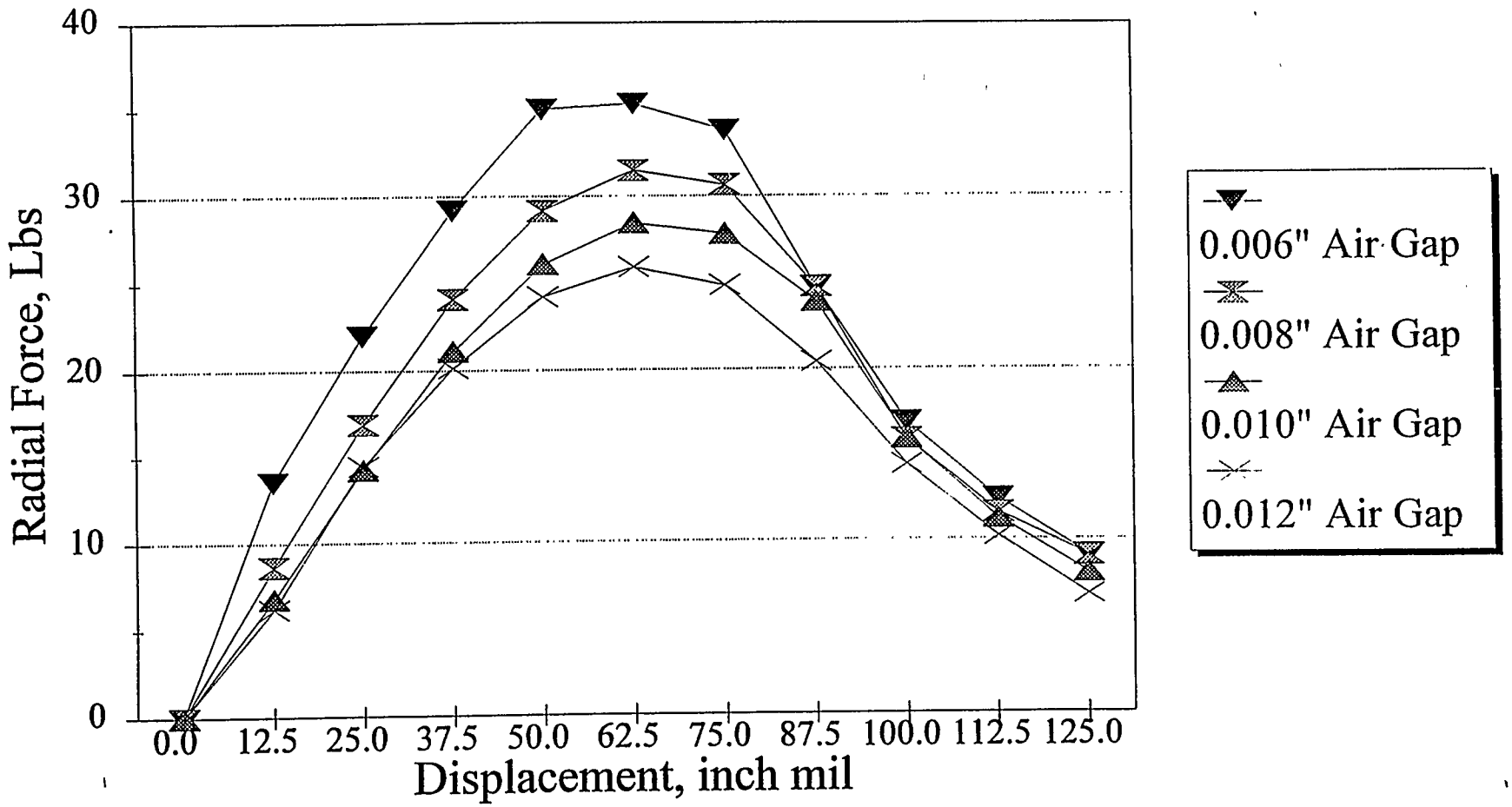

B vs. Radial Position for Disk #1 and #2 with Gap at 0.020" and 0.050"

September 14, 1995

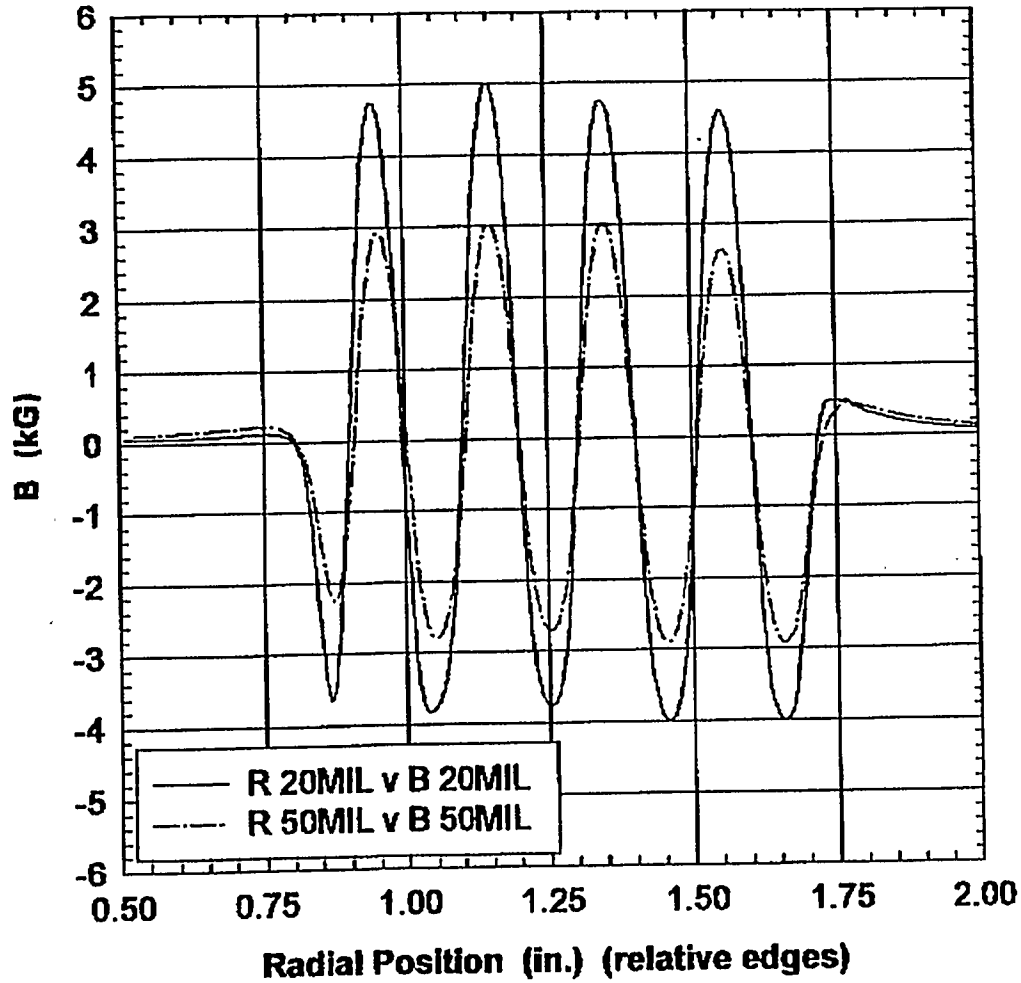

Note: No Backing Iron

Problems with Containment Systems for Catastrophic Failures

During Catastrophic Failures

- Composite Flywheels with tip speed of 800 m/s produce 69 Mpa (100 Ksi) pressure on containment walls.
  - Composite manufactures have demonstrated internal pressure vessels of only 40 Ksi.

- Which would require 7" thick, 186 lb, $5,000 carbon composite containment ring.

During Flywheel Seizures

- Containment vessels that are rigid will transmit severe torque reaction to vehicle.

- Containment vessels that are allowed to rotate freely with seized flywheel must travel at greater than Mach 2 in air!

Advantages of Thortek's Flywheels

- Thortek's Flywheels do not fail in catastrophic manner.

  - Many failures have been observed.
  - During failure a circumferential crack rapidly propagates around the flywheel.
  - The crack causes vibrations which may cause the shaft to come down on the touch-down bearings.
  - Touch-down bearings slow down flywheel until crack reseats self.
  - Resulting flywheel has improved stress profile and is free to operate to lower maximum speed.
  - Crack is indication that flywheel needs overhaul.
    Not an impending time bomb.

The amplitude of vibrations is 0.004" for inner ring failures and 0.010" for outer ring failures.

- Patented aluminum flywheel flexible hub can be forged in mass quantities.

Resulting Flywheel Stress Levels After Failure / Crack

- Transverse Failure of S-2 Glass Ring
  - Stress Levels on inner chunk of S-2 Glass Ring DROP significantly.
  - Stress Levels on remaining S-2 Glass & Carbon Ring DROP marginally.

- Transverse Failure of Carbon Ring
  - Stress Levels on S-2 Glass Ring & inner chunk of Carbon Ring DROP significantly.
  - Stress Levels on remaining Carbon Ring DROP marginally.

What is the Cost of a Thortek FESS?

1,333 wh, 90 lb rotor;
25 hp, 460VAC, 3 phase electric motor;
1" Composite Containment Ring

$189k to $225k	1st Unit
$125k to $150k	2nd Unit
$ 20k to $ 35k	10th Unit

Price does not include installation, engineering support & indepth testing.

Approximate ROM Cost of Options:

$ 0	Custom Speed Reducer instead of Electric Motor
$15k to $25k	Lightweight, Non-pump Vacuum Chamber
$15k to $25k	Multi-Variable Transmission
$25k to $50k	Gimbal Systems
$40k to $80k	Catastrophic Failure Containment
$60k to $75k	20 g Radial Load Test to Flywheel System
$400k to $500k	2nd Generation Flywheel

Highly Efficient Magnetic Bearings for Energy Storage Flywheels

Presented at:

The Flywheel Energy Storage Workshop
Oak Ridge, TN

October 31, 1995

Crawford Meeks
AVCON Magnetic Bearings

Highly Efficient Magnetic Bearings for ENERGY STORAGE FLYWHEELS

AVCON
Agoura Hills, California
(818) 889-0250

REQUIREMENTS FOR ENERGY STORAGE FLYWHEEL MAGNETIC BEARINGS

AVCON
Advanced Controls Technology

- CONTROL ROTOR DYNAMICS
  - RIGID BODY CRITICAL SPEEDS
  - FLEXIBLE BODY CRITICAL SPEEDS
  - VEHICLE ACCELERATIONS
  - GYROSCOPIC LOADS
- LOW ELECTRICAL LOSSES (<5 WATTS)
- LOW ROTATING LOSSES (<5 WATTS)
- ROBUST CONTROLS; SAFE CAPTURE UNDER WORST CASE CONDITIONS
- LOW COST

VWG09

MAGNETIC BEARINGS PROVIDE SUPERIOR POSITION AND DYNAMIC CONTROL

AVCON
Advanced Controls Technology

- STIFFNESS Can be Varied Over a Wide Frequency Range
- Critical Speed Vibration of Rotors can be *Virtually Eliminated*
- Electronics Damping can Provide Vibration Control Over a Wide Range of Frequencies
- Automatic Balancing Allows Rotor to Spin About Mass Center, Rather than Geometric Center Totally Eliminating Vibration
- Dirt and Chemical Contamination do not Affect Bearing Performance
- Bearing Condition and Position can be Monitored Using Servo Instrumentation
- Shaft Position can be Changed Precisely Using Built-In Servo Controls

VWG139

TRADITIONAL APPROACHES TO MAGNETIC BEARINGS ARE INEFFICIENT AND EXPENSIVE

AVCON, Inc.

- Coils are 2 to 2½ Times Larger than P.M. Bias; Therefore, Bearing is Larger and Heavier
- Impedance of Coil is High Which Limits Dynamic Load Capacity
- Large Amount of Electrical Power is Consumed Continuously to Maintain Magnetic Field
- 10 Power Amplifiers are Required to Support Shaft (P.M. Bias only Requires 5)
- High Speed Rotating Losses are 5 to 30 Times Homopolar Design Losses
- Electronics are Large, Heavy, and ***Expensive***

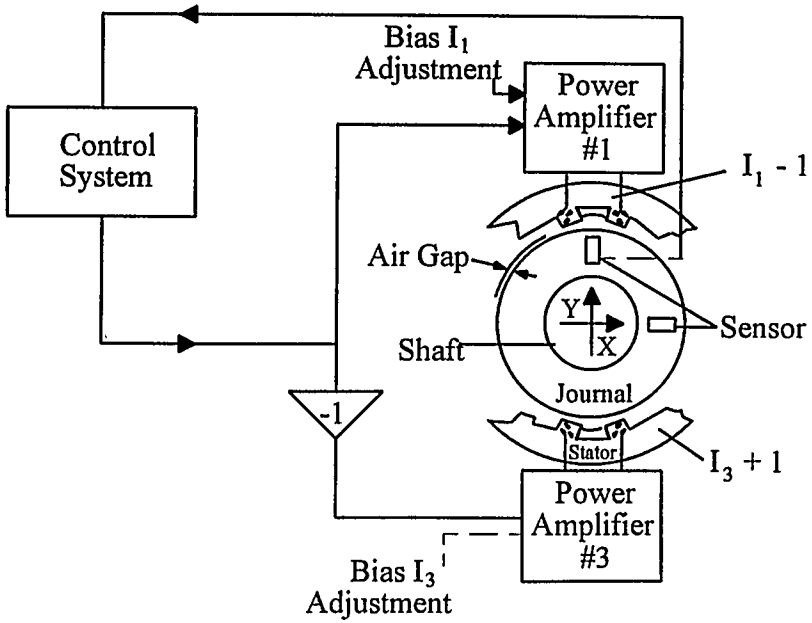

Eight-Pole Active Magnetic Bearing Configuration

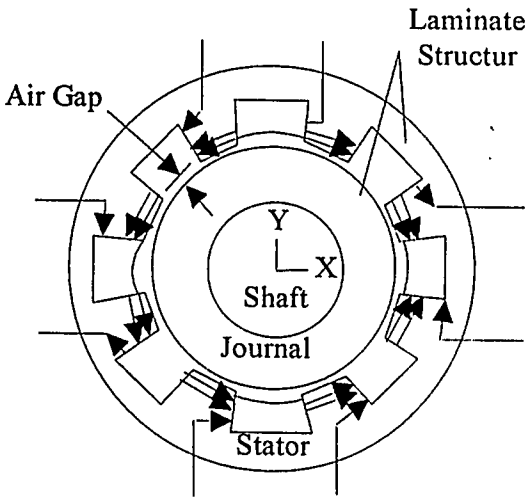

Basic Elements of Active Magnetic Bearing

VWG103

HOMOPOLAR PERMANENT MAGNETIC BIAS MAGNETIC BEARINGS REDUCE SIZE, WEIGHT, COMPLEXITY & COST OF SERVO CONTROL ELECTRONICS

AVCON
Advanced Controls Technology

AVCON Homopolar Controller

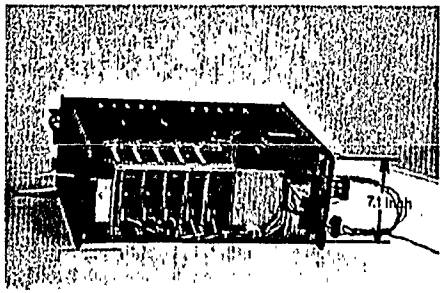

Useful Volt Amps Up to 4000

Weight	=	30 Pounds
Height	=	7 Inch
Cost	=	Significantly Less

Commercial/Industrial Controllers

Useful Volt Amps	=	1800
Weight (Large Unit)	=	837 Pounds
Height (Large Unit)	=	70 Inch
Weight (Small Unit)	=	264 Pounds
Height (Small Unit)	=	35 Inch

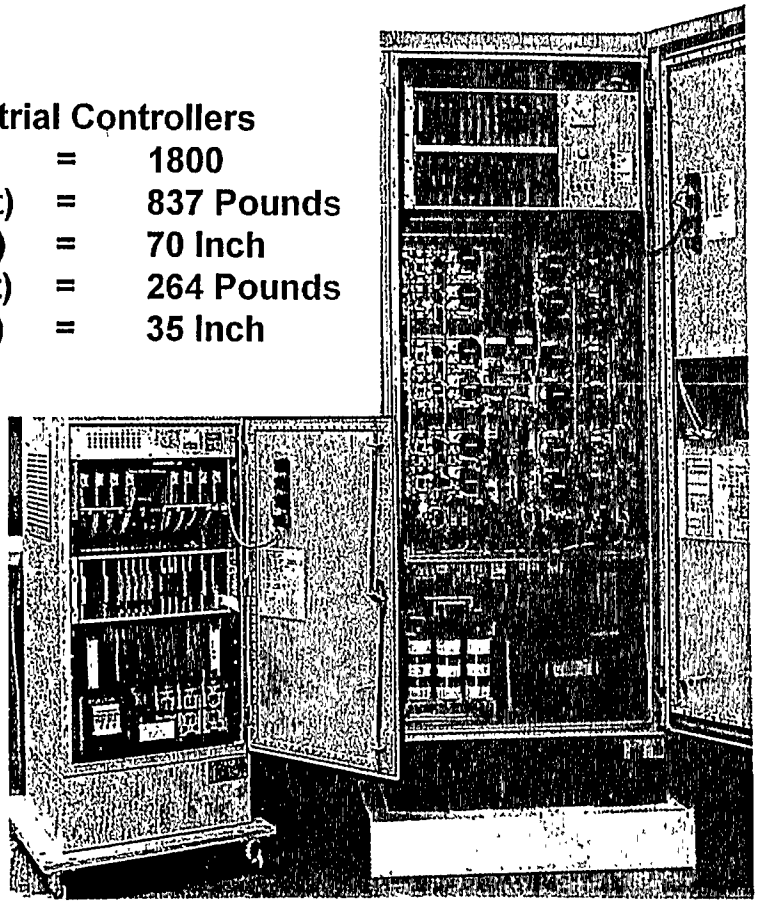

CVG16.

HOMOPOLAR PERMANENT MAGNET BIAS ACTUATOR IS KEYSTONE TECHNOLOGY

AVCON
Advanced Controls Technology, Inc.

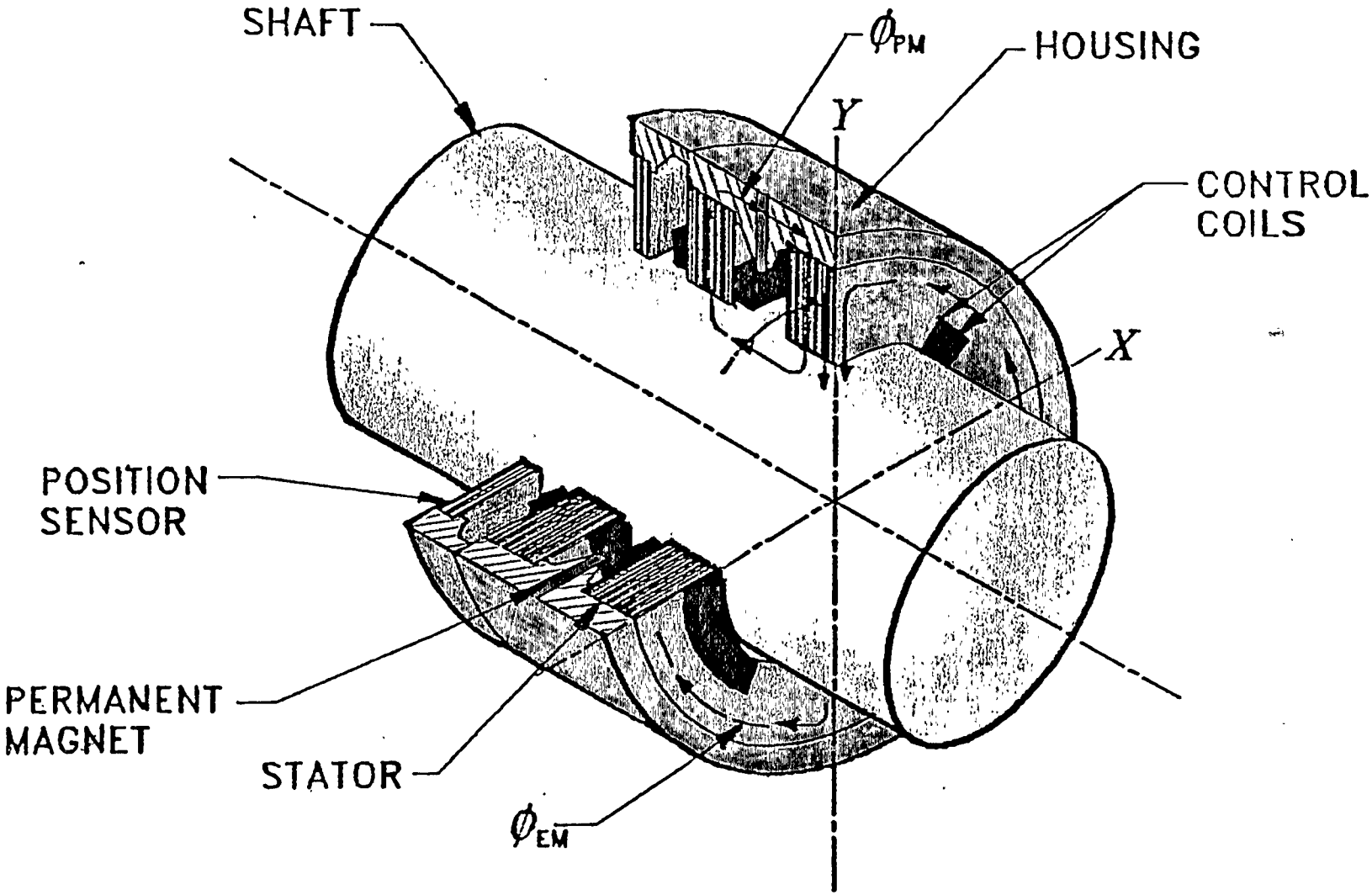

CVG21

AVCON RADIAL BEARING DESIGNS

Actuator Weight vs Radial Load

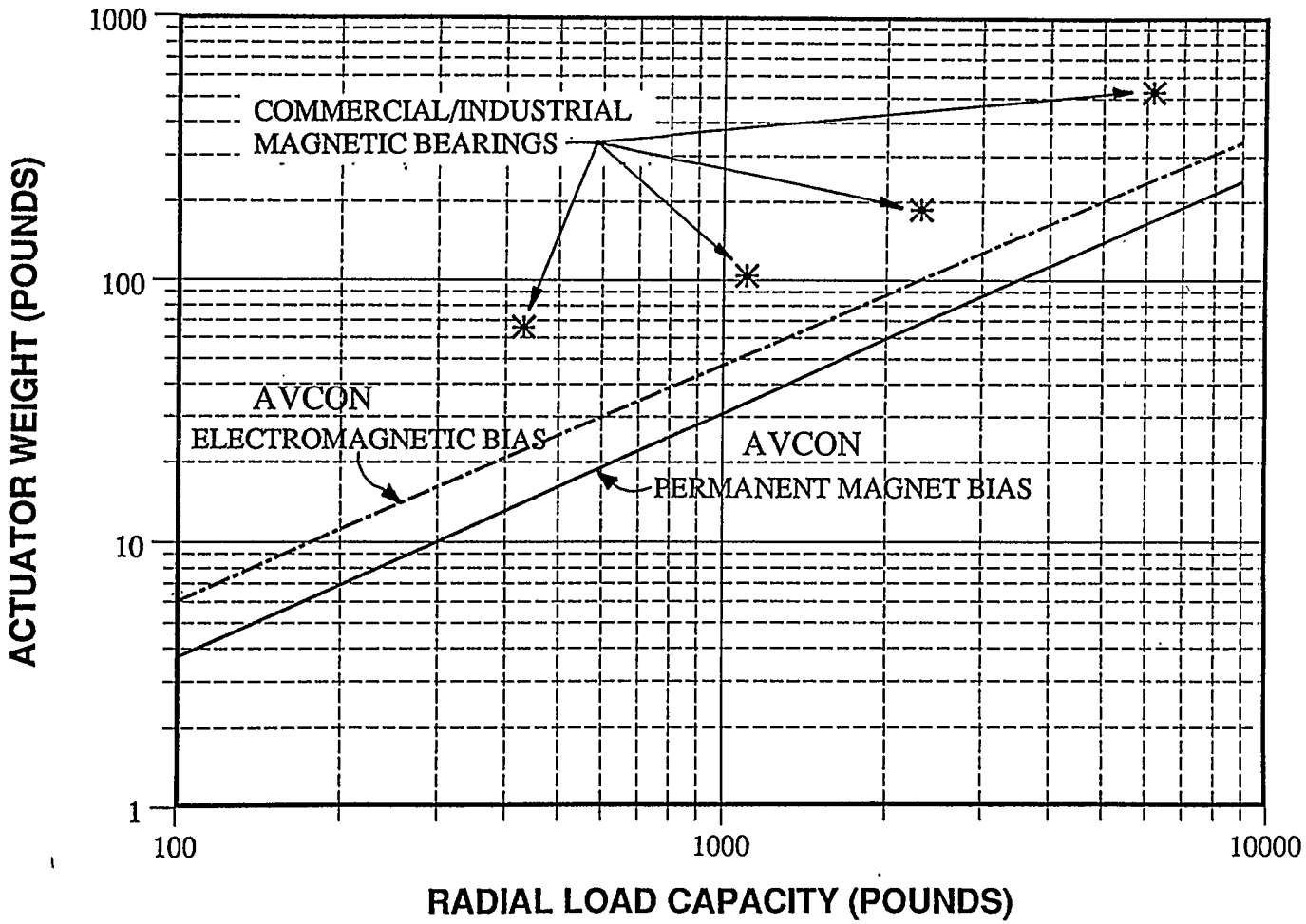

PERMANENT MAGNET BIAS AND ALL ELECTROMAGNETIC

10-17-90

AVCON RADIAL BEARING DESIGNS

Actuator Power Consumption vs Radial Load

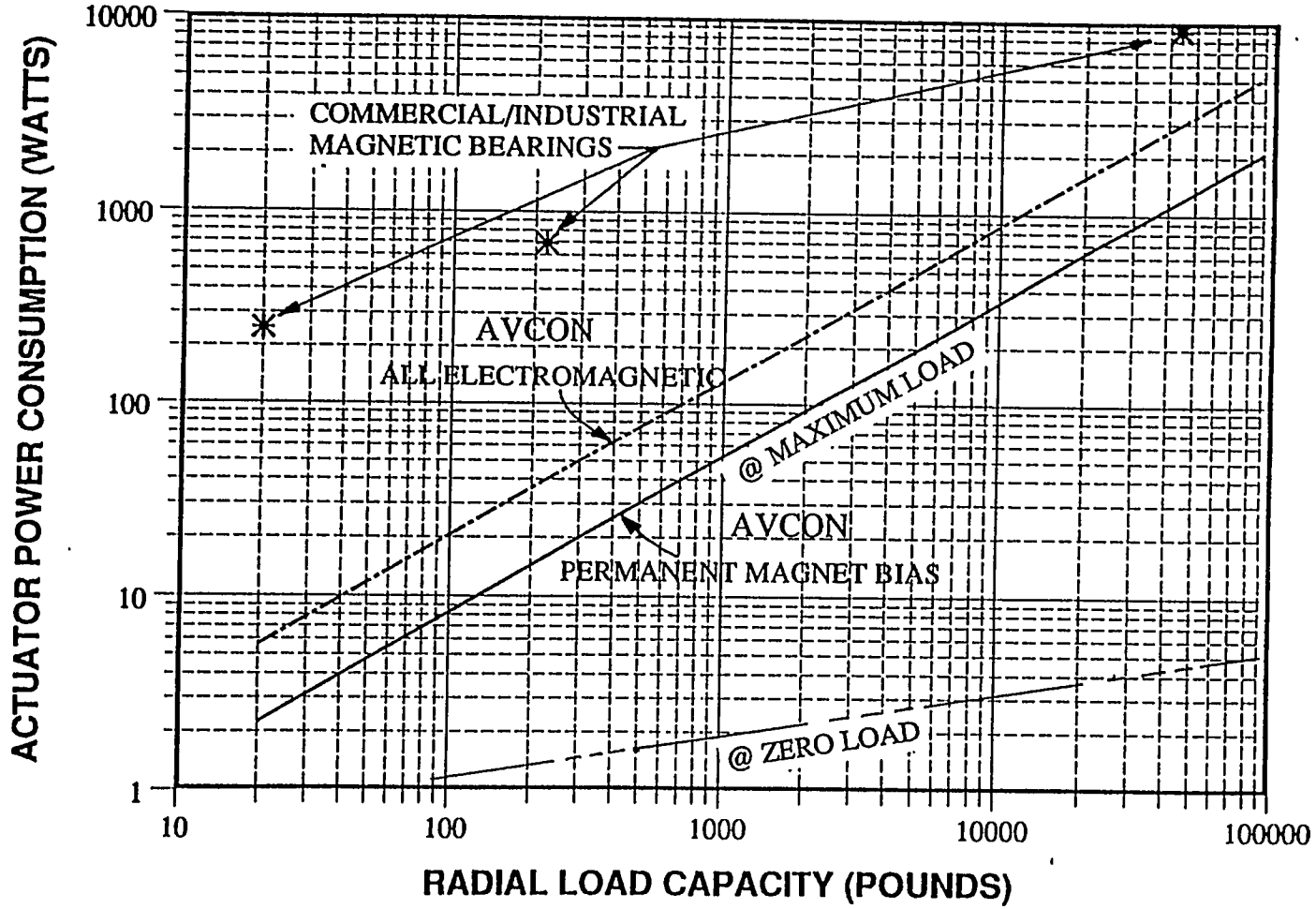

PERMANENT MAGNET BIAS AND ALL ELECTROMAGNETIC

10-17-90

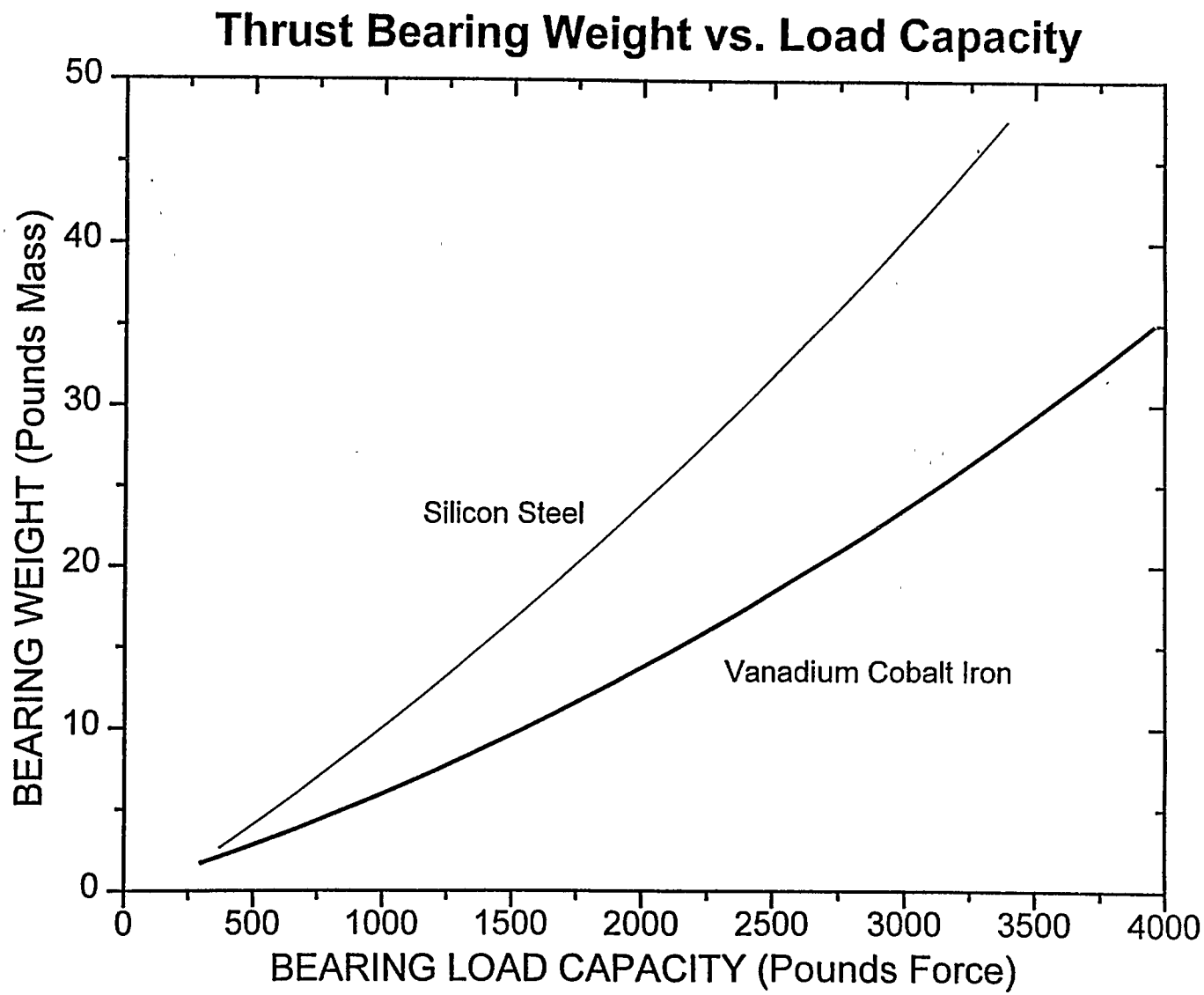
Thrust Bearing Weight vs. Load Capacity
BEARING WEIGHT (Pounds Mass)
BEARING LOAD CAPACITY (Pounds Force)
Silicon Steel
Vanadium Cobalt Iron
0
10
20
30
40
50
0
500
1000
1500
2000
2500
3000
3500
4000

AVCON AXIAL BEARING DESIGNS

Actuator Power Consumption vs Axial Load

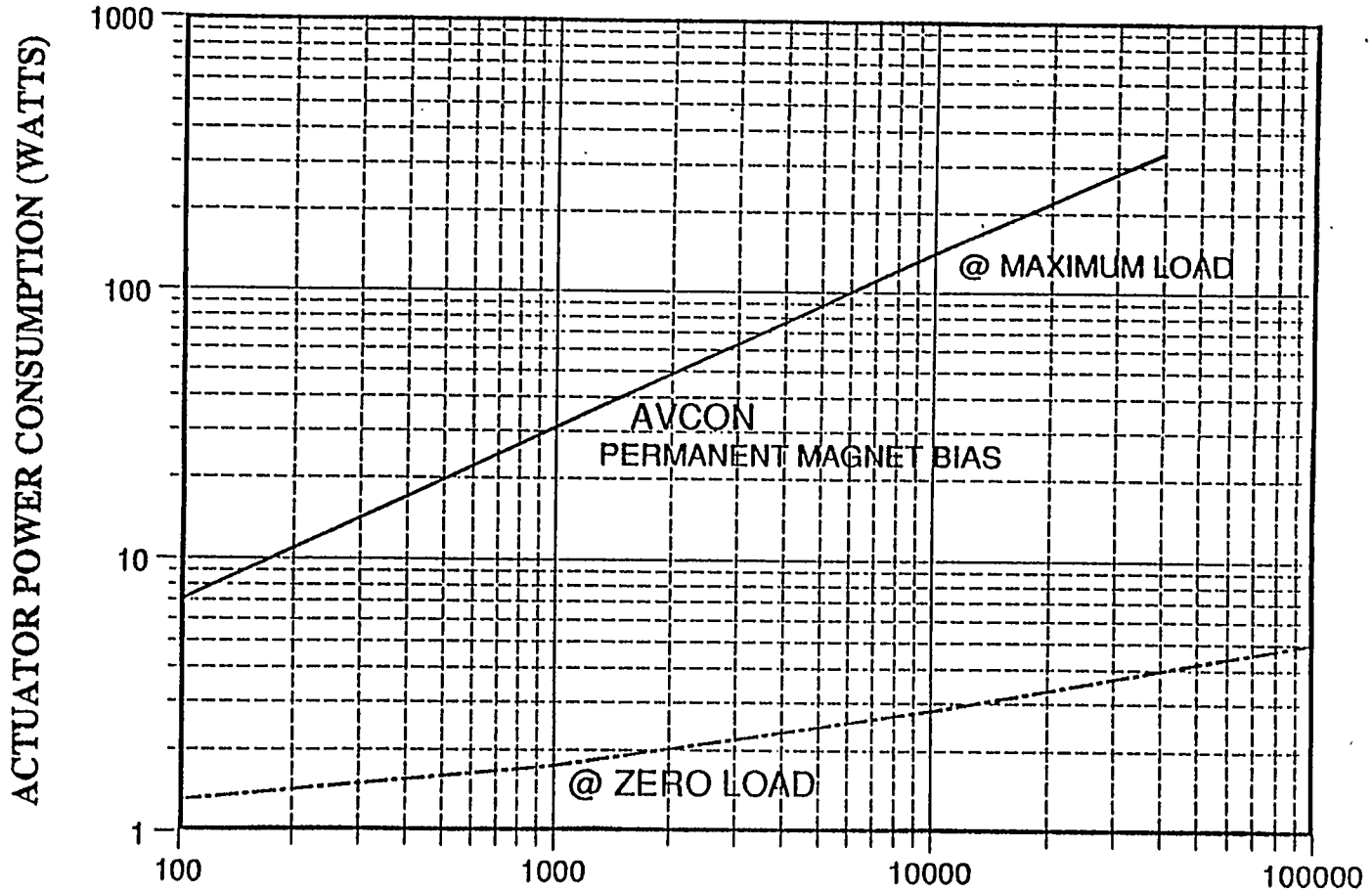

AXIAL LOAD CAPACITY (POUNDS)

PERMANENT MAGNET BIAS

COMPARISON OF AVCON HOMOPOLAR PM OR ALL ELECTRIC BIAS AND CONVENTIONAL DESIGNS

AVCON, Inc.

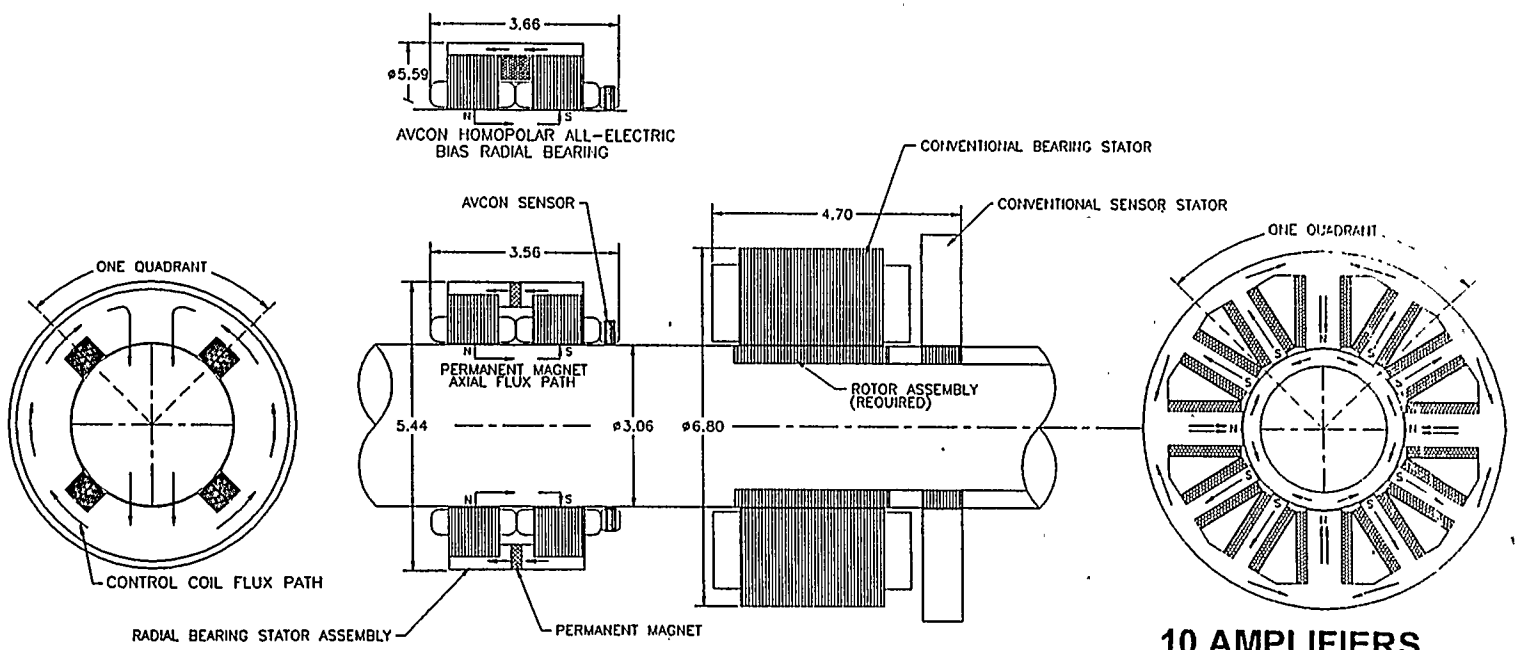

5 AMPLIFIERS
POWER 60 WATTS

10 AMPLIFIERS
POWER 1000 WATTS

500 LB. RADIAL LOAD CAPACITY MAGNETIC BEARINGS

(ALL ELECTRIC BIAS
POWER 33 WATTS)

NON REDUNDANT ACTUATORS

VWG188

THE USE OF PERMANENT MAGNETIC BIAS YIELDS SEVERAL BENEFITS

AVCON
Advanced Controls Technology

ADVANTAGES OF PERMANENT MAGNET BIAS MAGNETIC BEARINGS;

- SMALLER SIZE ACTUATORS, LIGHTER WEIGHT ACTUATORS
- SIMPLIFIES CONTROL SYSTEM BY LINEARIZING FORCE VS CONTROL CURRENT FUNCTION
- SIGNIFICANTLY REDUCES POWER CONSUMPTION (ELECTROMAGNETS ARE USED FOR CONTROL ONLY; UP TO 50 TIMES REDUCTION IN POWER CONSUMPTION)
- REDUCES NUMBER OF SERVO AMPLIFIERS FROM 10 TO 5. (THIS CUTS PARTS COUNT APPROXIMATELY IN HALF; LOWER POWER CONSUMPTION RESULTS IN SMALLER, LIGHTER WEIGH POWER TRANSISTORS AND HEAT SINKS)
- SIGNIFICANTLY REDUCES SIZE AND WEIGHT OF SERVO ELECTRONICS
- IMPROVES RELIABILITY OF ELECTRONICS

AS ENERGY PRODUCT OF PERMANENT MAGNET MATERIALS INCREASES, THESE ADVANTAGES WILL BECOME EVEN GREATER

VWG04

HOMOPOLAR MAGNETIC BEARINGS GREATLY REDUCE ROTOR HYSTERESIS AND EDDY CURRENT LOSSES

AVCON, Inc.

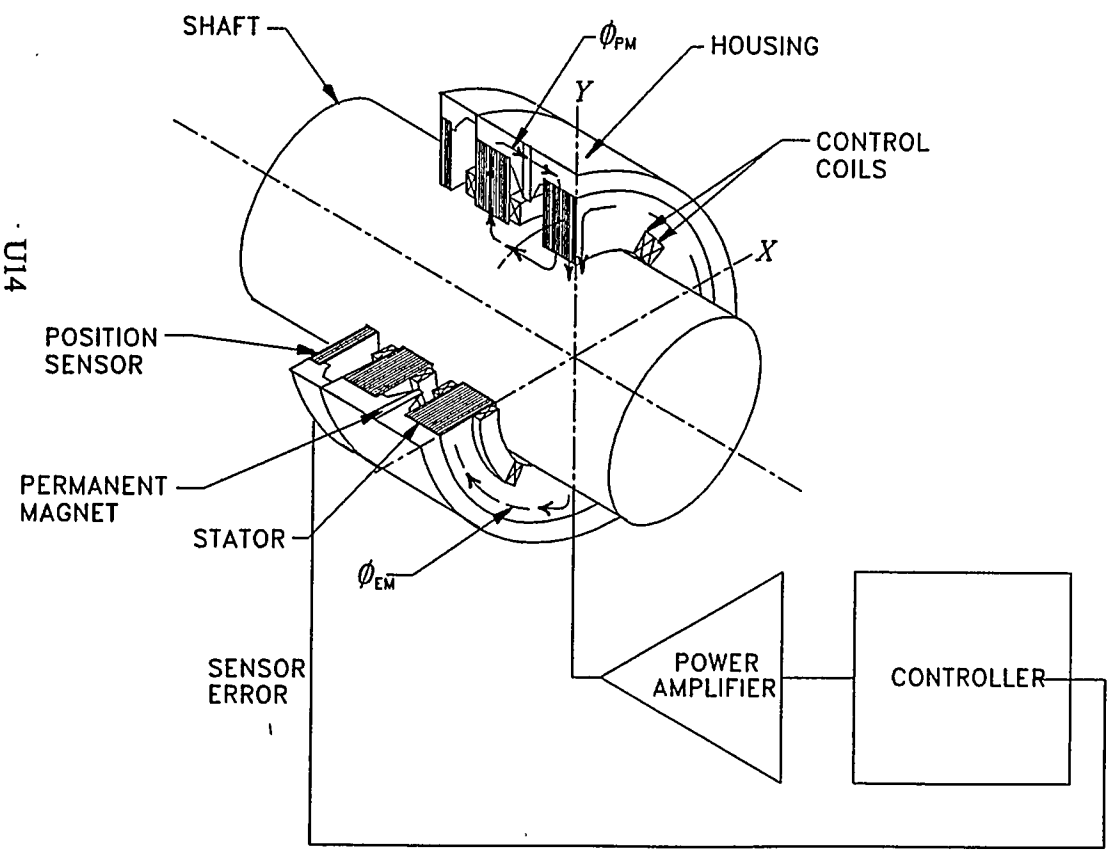

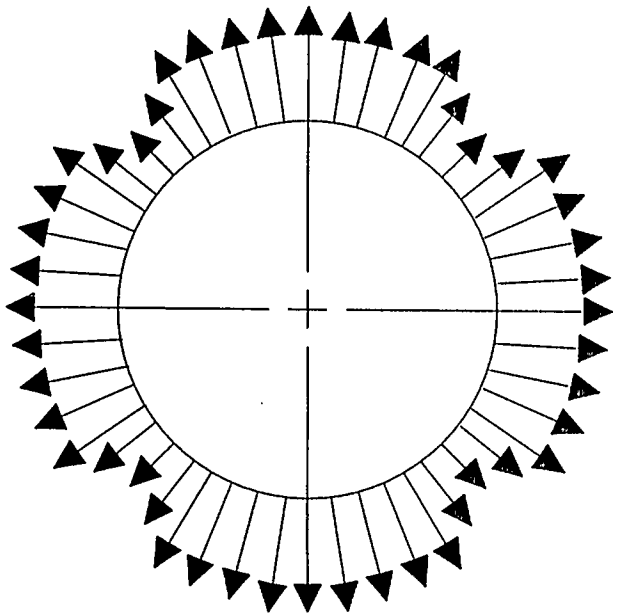

MAGNETIC INTENSITY IS UNIVALENT AND ALMOST CONSTANT IN AIR GAP

VWG180

THEORETICAL METHODOLOGY FOR PREDICTING SHAFT CORE LOSSES IN MAGNETIC BEARINGS

ACON
Advanced Controls Technology

The theoretical core losses due to hysteresis (W_h), in watts per pound of core, can be computed using the Steinmetz equation [6,7]:

$$W_h = \frac{0.454\ \nu\ f\ B^{1.6}}{7.7 \times 10^4} \text{ watts per pound of core} \qquad (1)$$

where:

- ν = the Steinmetz constant (which is 0.009 for 0.013 inch laminations of high grade dynamo steel. Constant not available for Rotelly 5)
- f = frequency of flux reversals of cyclically induced magnetic field (Hz) i.e. f = pN
- p = number of pole pairs
- N = speed of rotation (revolutions/sec)
- *B* = amplitude of varying magnetic intensity (Gauss)

Fink and Beaty[6,8] derived the following relationship for predicting eddy current losses (W_e) in watts per pound core material:

$$W_e = \frac{58.53(\pi\ t\ f\ B)^2}{6p(1 \times 10^{16})} \text{ watts per pound of core} \qquad (2)$$

where:

- t = laminations thickness in cm (0.013 in = 0.05 cm)
- *p* = specific electrical resistivity of core material (Ohm-cm) = 26×10^{-6} for "Rotelly 5" 50% cobalt-iron alloy

VWG142

HIGH SPEED WHEEL BEARINGS MUST CONTROL CRITICAL SPEEDS

AVCON
Advanced Controls Technology

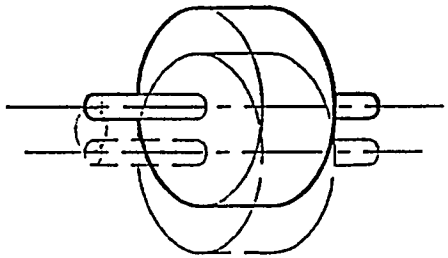

LATERAL BOUNCE MODE

Figure 1 (a)

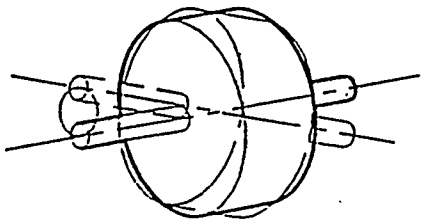

CONING MODE

Figure 1 (b)

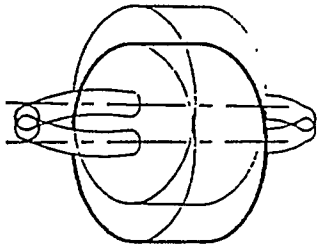

FIRST CRITICAL BENDING MODE

Figure 1 (c)

Sample Vibration Modes of Rotating Wheel System

ROTOR AND HOUSING MODEL WITH MAGNETIC AND CONVENTIONAL BEARING

Advanced Controls Technology

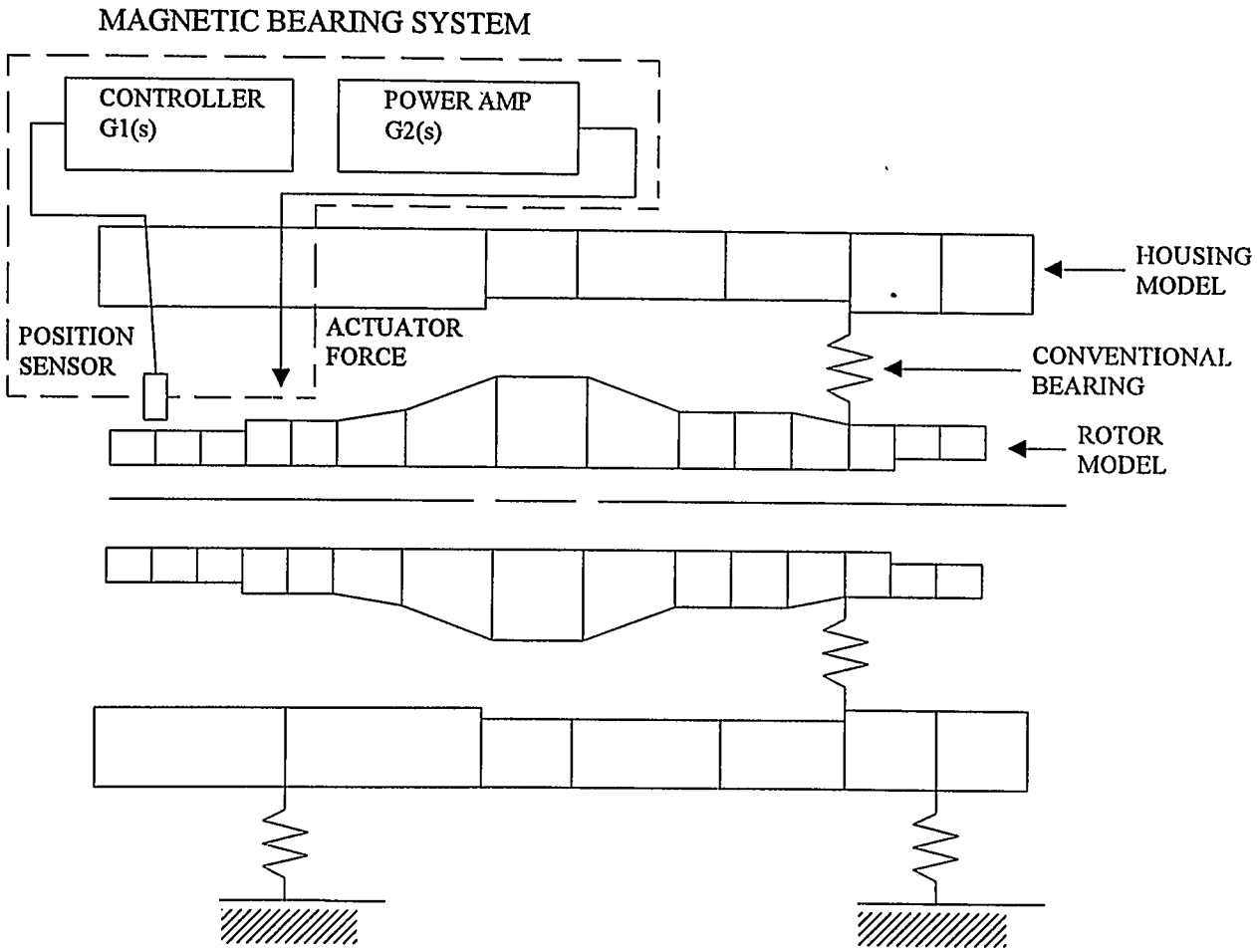

VWG286

AVCON EIGENVALUE ANALYSIS - MODE SHAPE PLOT

AVCON
Advanced Controls Technology

ROTOR MODE SHAPE: PLOT #14
SSME HPOTP SIMULATOR, VERSION 5, SMDE10
TF=AVCLOX4, FHR SEAL IN

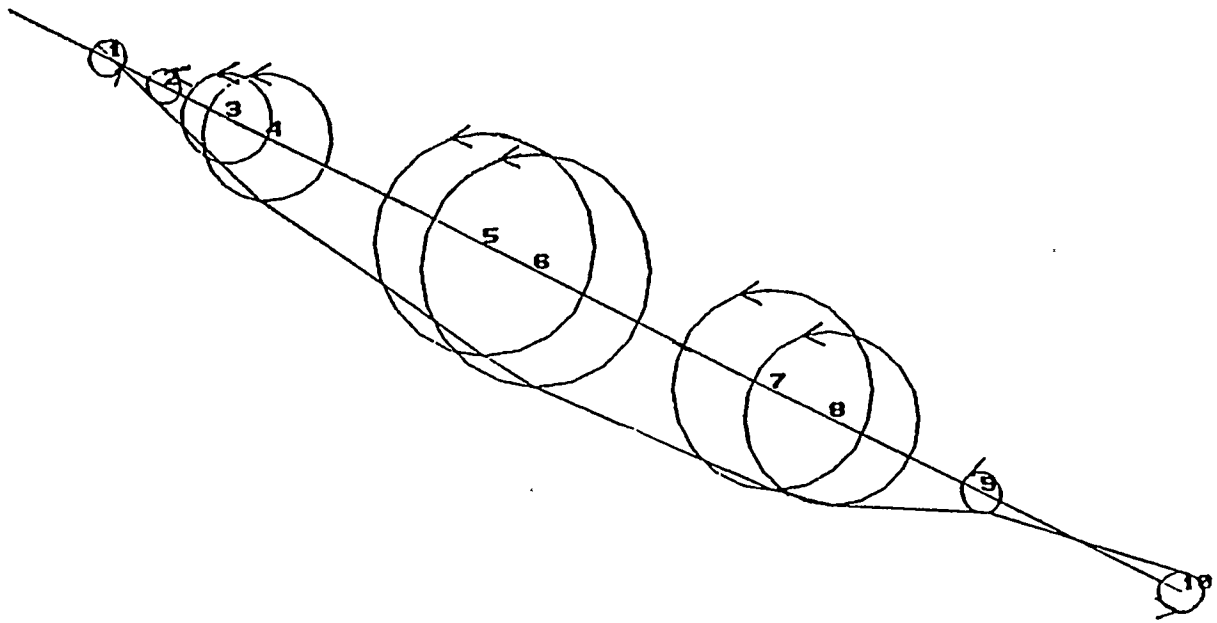

ROTOR SPIN SPEED (RPM) = 29000
LOG DEC = 0.521

NAT FREQUENCY (CPM) = 30468.18
STATION 6 ORBIT = FORWARD PRECESION

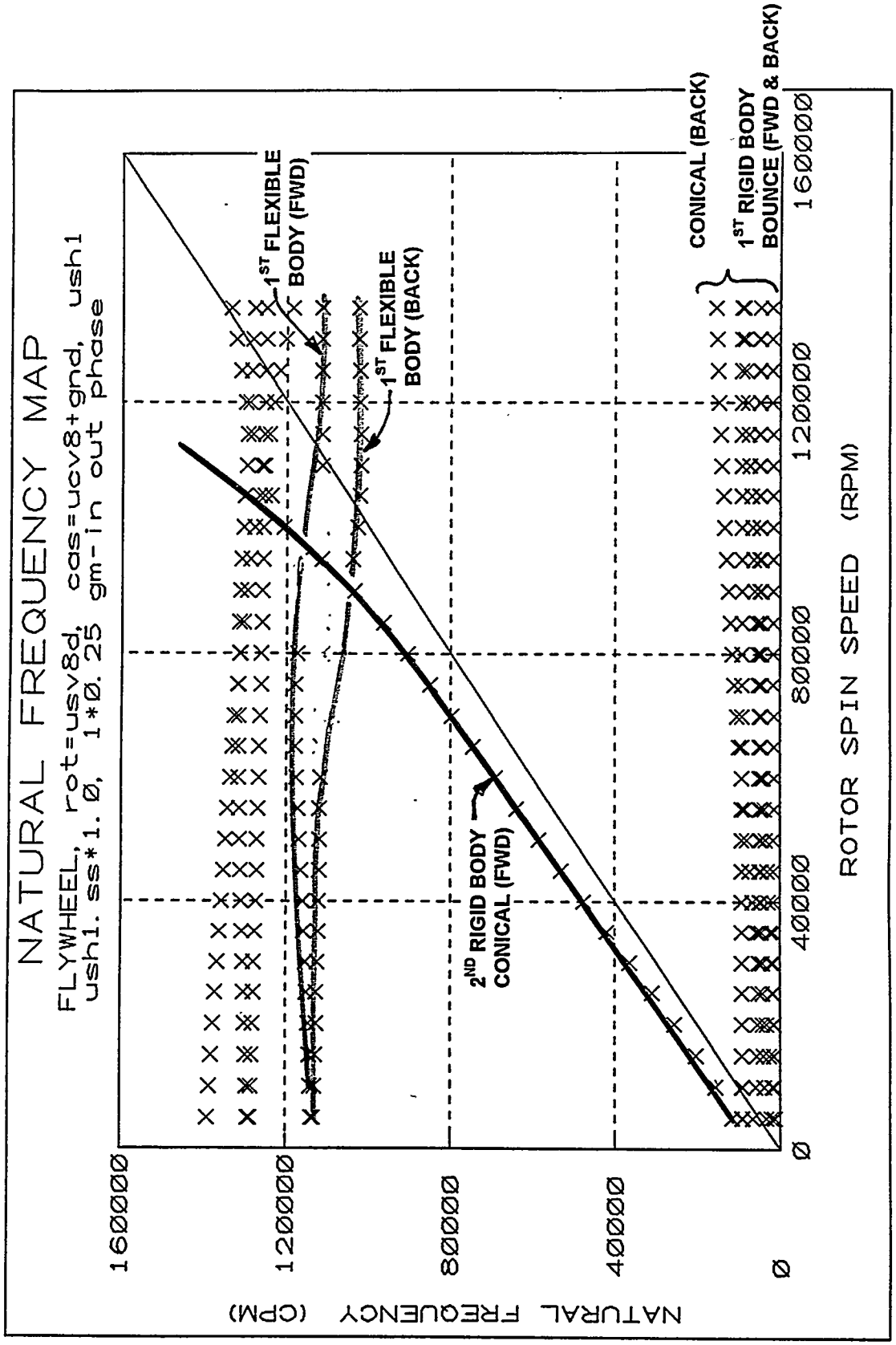
NATURAL FREQUENCY MAP
FLYWHEEL, rot=usv8d, cas=ucv8+gnd, ush1
ush1. ss*1. Ø, 1*Ø.25 gm-in out phase
1ST FLEXIBLE BODY (FWD)
1ST FLEXIBLE BODY (BACK)
2ND RIGID BODY CONICAL (FWD)
CONICAL (BACK)
1ST RIGID BODY BOUNCE (FWD & BACK)
NATURAL FREQUENCY (CPM)
ROTOR SPIN SPEED (RPM)
Ø
4ØØØØ
8ØØØØ
12ØØØØ
16ØØØØ

DESIGN OF ENERGY STORAGE FLYWHEEL IS A HIGHLY HEURESTIC PROCESS:

- System Configuration Must Address Bearing/Rotor Stability Issues
- Rotor Structural and Mass Properties Must be Compatible with Bearing System ($I_p/I_t \neq 1.0$; $f_{crit} > W_{max}$)
- Rotor Target Materials are Limited in Contrifugal Survival Stress

- Rotor Losses Must be Minimized by Theroretical Optimization of Magnetic Circuit

- Low Rotor Loss Must be Demonstrated Empirically and Correlated

- High Reliability and Life Must be Addressed in Design and Test Program

BEFORE MAGNETIC BEARINGS BECOME VIABLE FOR LOW COST HIGH PRODUCTION SYSTEMS, THEY MUST BE SIMPLIFIED AND DESIGNED FOR PRODUCIBILITY

- Simplified Controller/System Design (Parts Count is Now Over 2,000; Can be Reduced to Less Than 200)
- Custom ASIC Hybrids Must be Adapted to Reduce Cost and Size
- Electronics Must be Rugedized for Operating Environments
- Automatic Testing and Diagnostics Systems Must be Incorporated

vwq003

ASIC's (Application Specific Integrated Circuits)

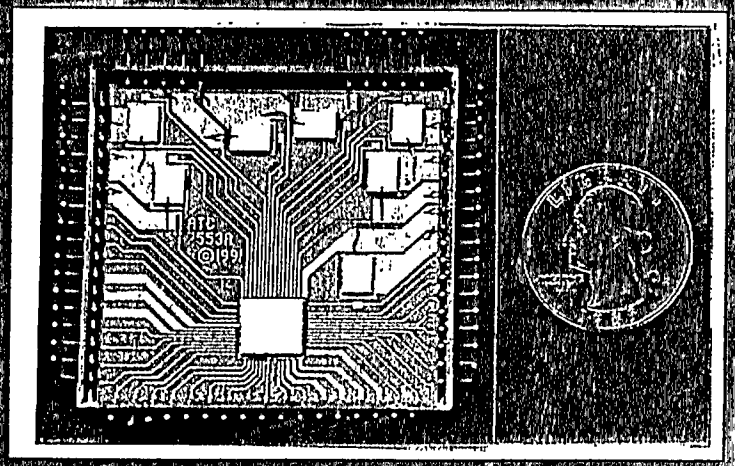

ADVANTAGES:

- 10 Times Reduction in Size
- 10 Times Reduction in Cost
- Increased Reliability

U23

ADVANCED DIGITAL CONTROLLER FOR LARGE MAGNETIC BEARINGS HAS COMPUTER DIAGNOSTIC

AVCON
Advanced Controls Technology

CONTROL ALGORITHMS CAN BE MODIFIED BY KEYBOARD INPUTS

DISPLAY CAN SHOW:

- ❑ SHAFT ORBIT
- ❑ BEARING FORCES
- ❑ OF X, Y, Z AXES
- ❑ CONTROL CURRENT
- ❑ OF X, Y, Z AXES

ALL DATA CAN BE DISPLAYED IN REAL TIME AND RECORDED FOR LATER ANALYSIS

AUTOMATIC SHUTDOWN LIMITS CAN BE SET BASED ON LIMIT LOADS, CURRENTS, OR ORBITS.

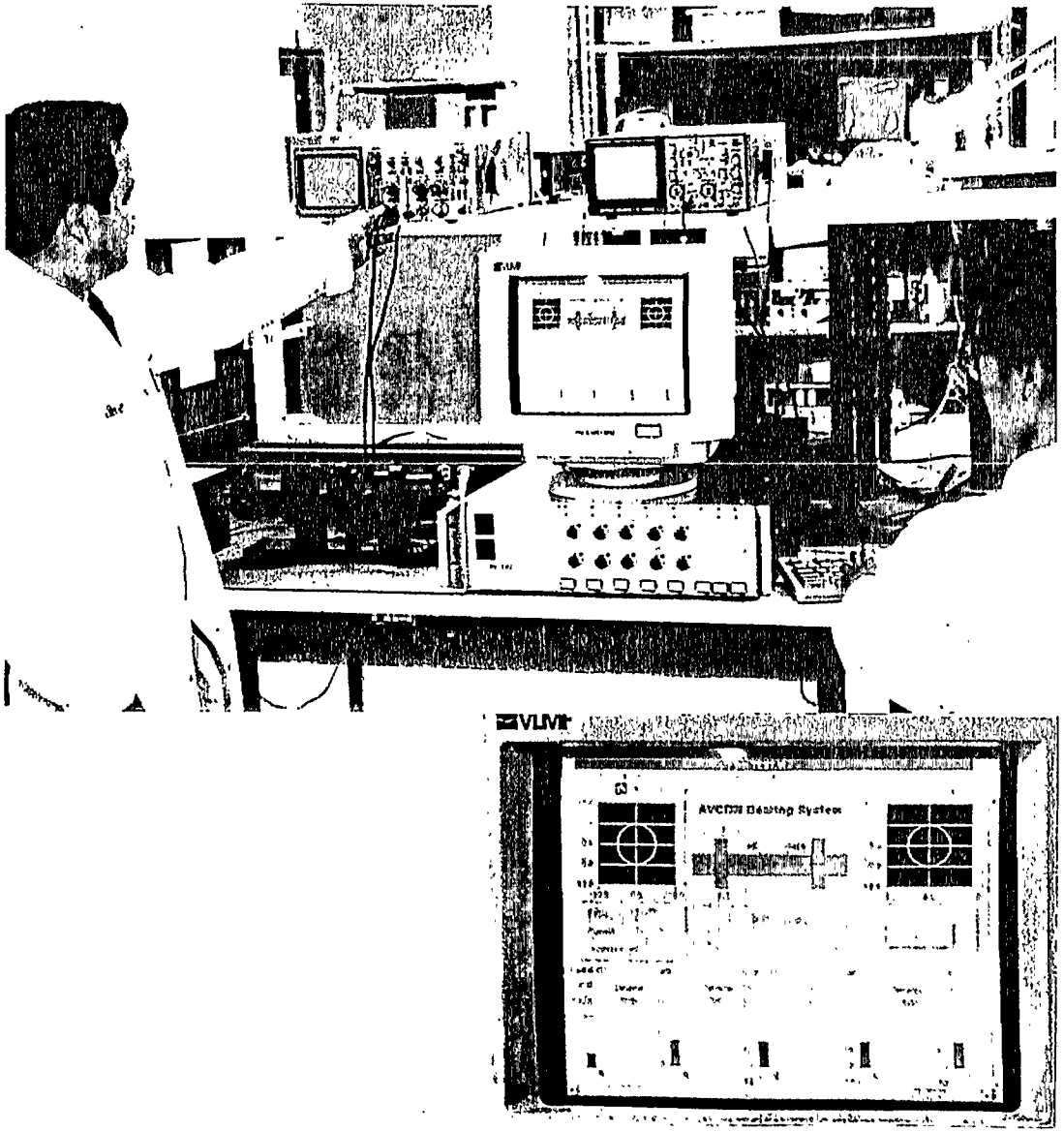

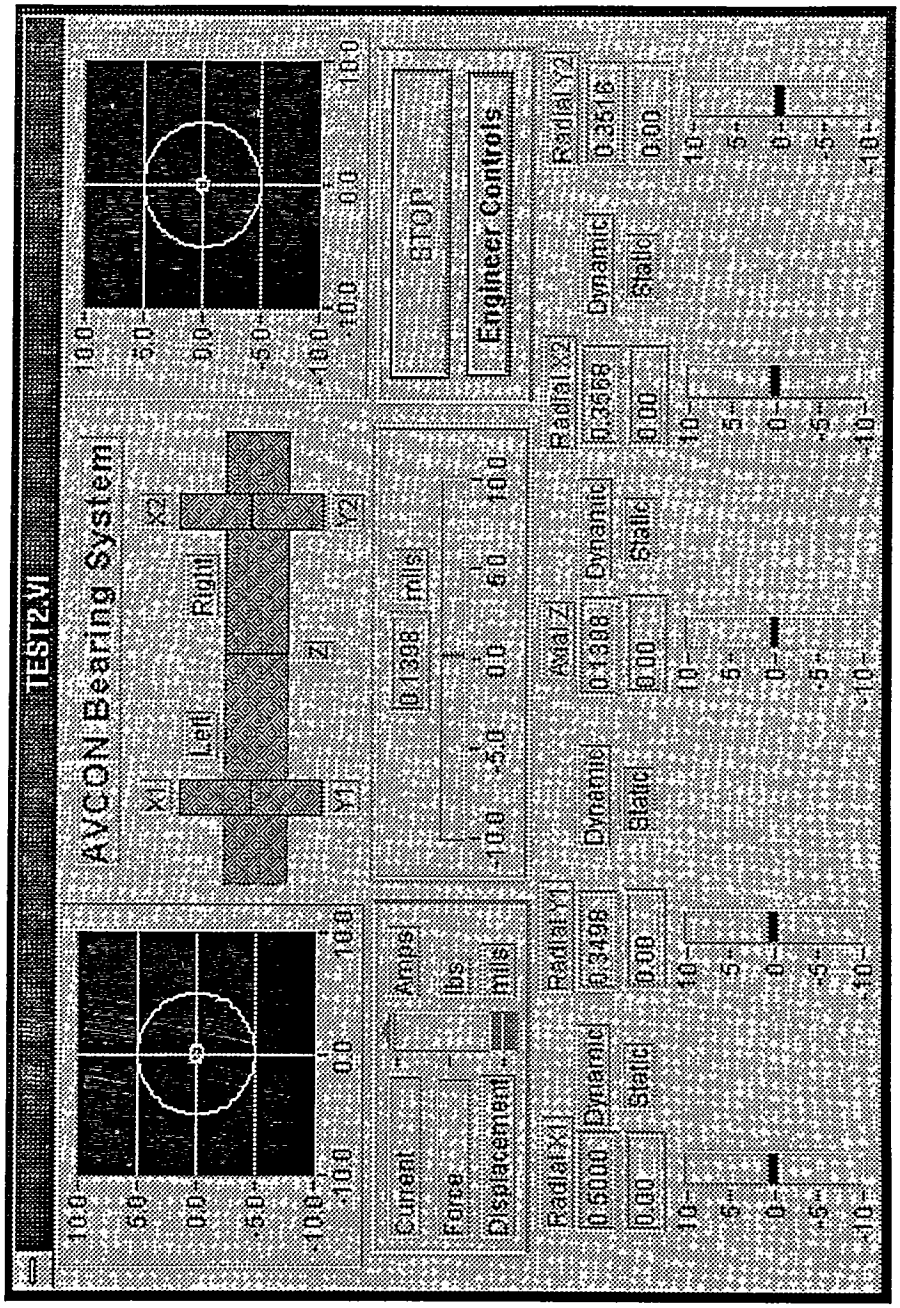
TEST2.VI
AVCON Bearing System
X1
Left
Right
X2
Y1
Y2
Z1
Z2
Current
Amps
Force
lbs
Displacement
mils
0.1998
mils
STOP
Engineer Controls
Radial X1
0.5000
Dynamic
0.00
Static
Radial Y1
0.3498
Dynamic
0.00
Static
Axial Z1
0.1398
Dynamic
0.00
Static
Radial X2
0.2568
Dynamic
0.00
Static
Radial Y2
0.3516
Dynamic
0.00
Static

FIVE-AXIS CONTROLLER FOR FLYWHEEL MAGNETIC BEARING

AVCON
Advanced Controls Technology

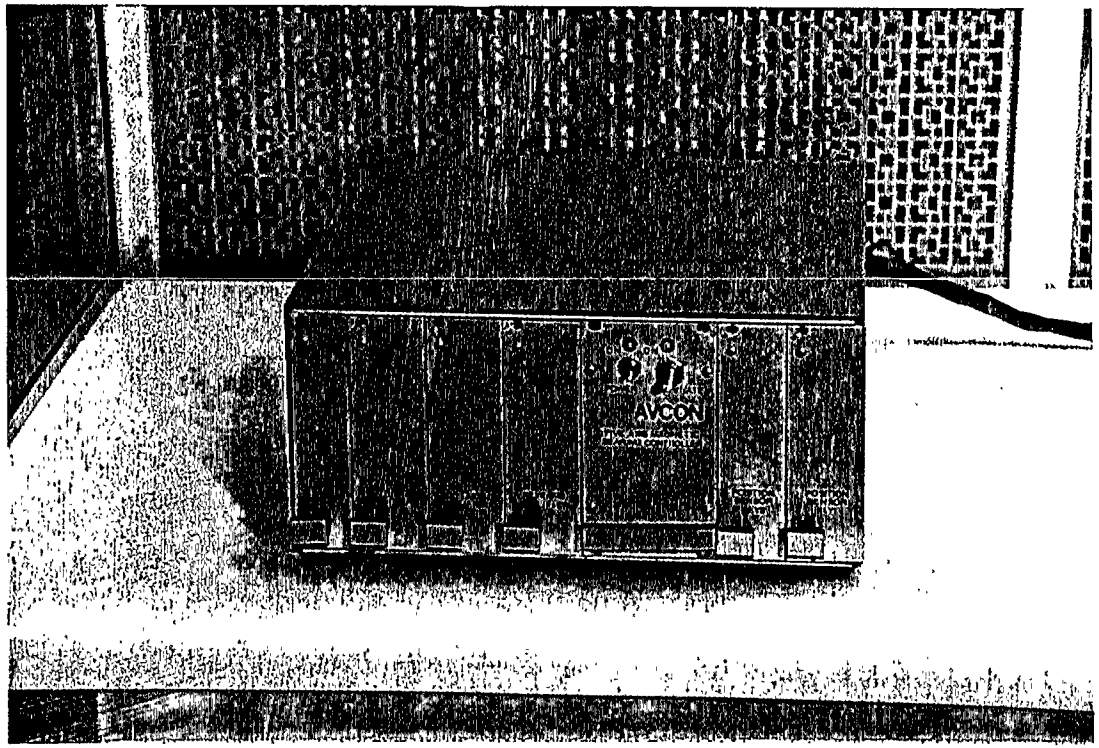

CVG20

HIGH PERFORMANCE POSITION SENSORS ARE A VITAL COMPONENT FOR STABLE MAGNETIC BEARINGS

AVCON, Inc.
Advanced Controls Technology

- INSENSITIVE TO PWM EMI NOISE
- HIGH SIGNAL-TO-NOISE RATIO (> 70 db)
- COMPACT WITH 5 CHANNELS ON A 3U EUROCARD PCB
- RADIAL AND AXIAL SENSING ON ONE BOARD

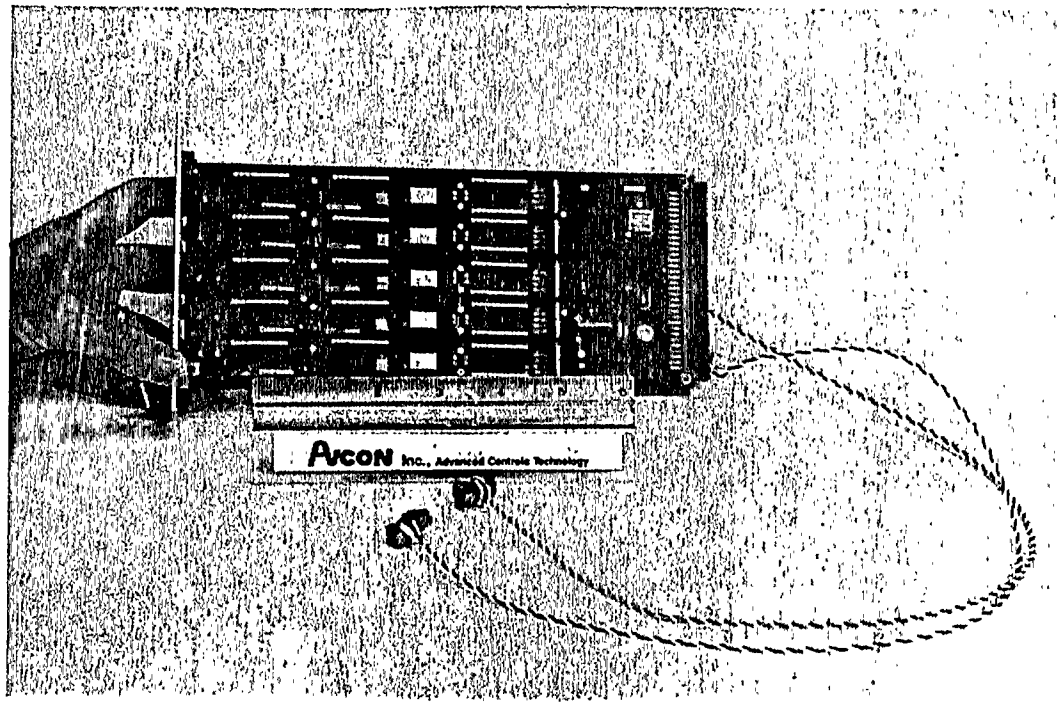

AVCON SENSORS and DEMODULATOR ELECTRONICS

POWER AMPLIFIER AND PROGRAMMABLE DIGITAL CONTROL ELECTRONICS FOR MAGNETIC BEARINGS

AVCON
Advanced Controls Technology

Power Amplifier is State-Of-The Art PWM Surface Mount Built with Pick and Place Robots

Output:	**4,000 Volt-Amp Steady State**
	8,000 Volt-Amp Transients
Bandwidth:	**1,000 Hz @ Rated Current Zero Phase Shift**
Size:	**4" x 7.25-3 U Eurocard Mounting**

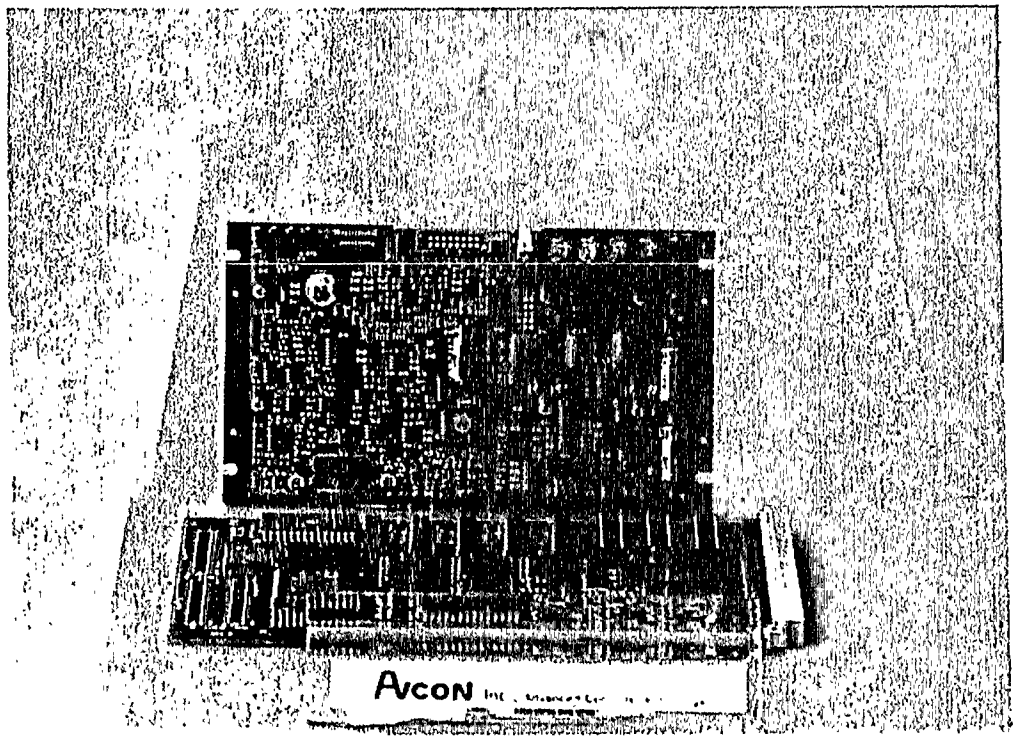

PROGRAMMABLE DIGITAL CONTROLLER FOR MAGNETIC BEARINGS

AVCON
Advanced Controls Technology

Built by Surface Mount Construction for Minimum Size, Minimun Cost

Digital Signal Processor: Analog Devices ADSP 2171

Clock Rate: 33. M Hz

Sampling Rate: 10K Hz

A/D Converter: 12 Bit
1 μ sec Setting Time

RAM: 16K x 16

PROM: 2K x 16

Input Power: $\pm$ 12 Volts, + 5 Volts

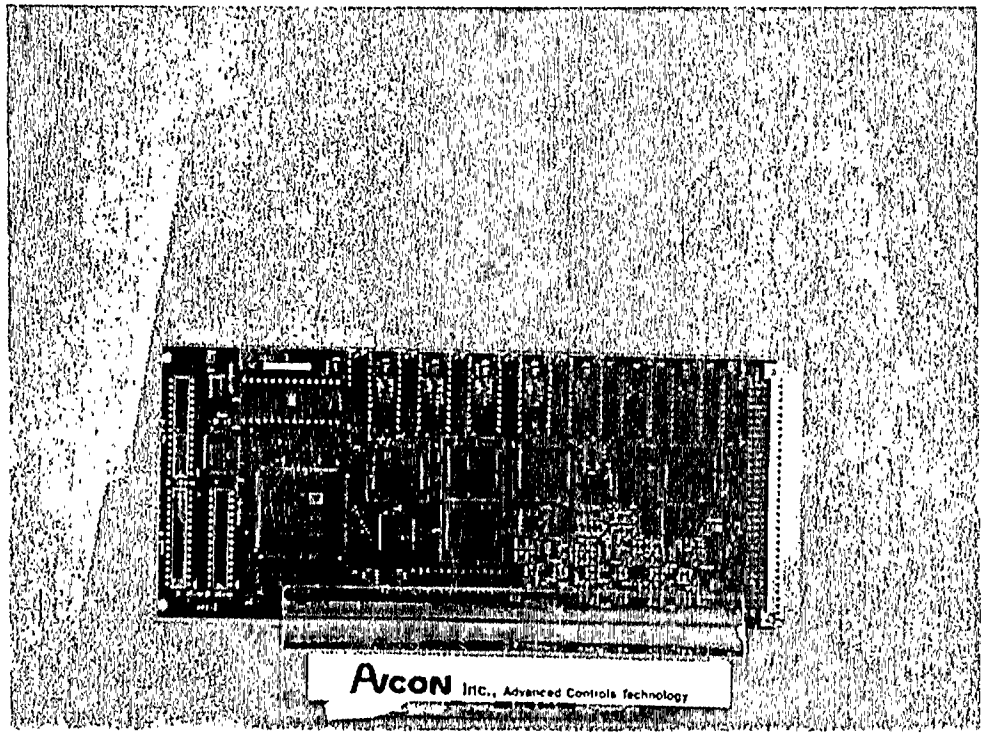

60,000 RPM INTEGRATED POWER UNIT

AVCON
Advanced Controls Technology

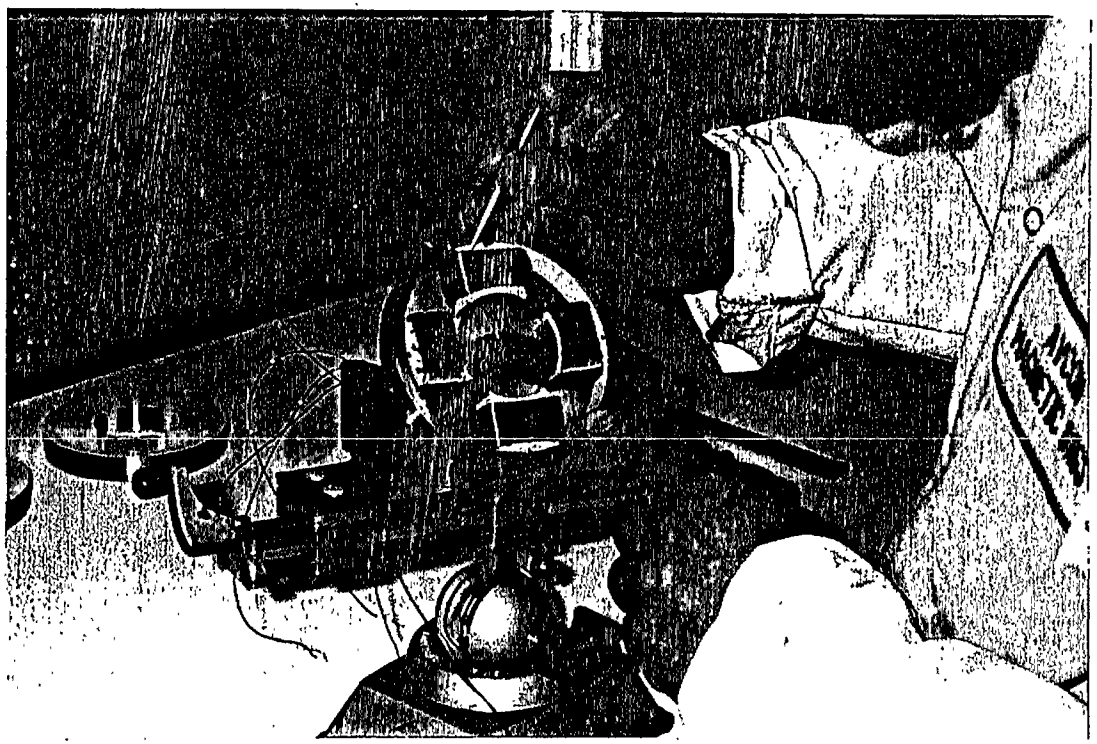

STATOR FOR 240# PERMANENT MAGNET BIAS RADIAL BEARING

CVG5

60,000 RPM INTEGRATED POWER UNIT

AVCON
Advanced Controls Technology

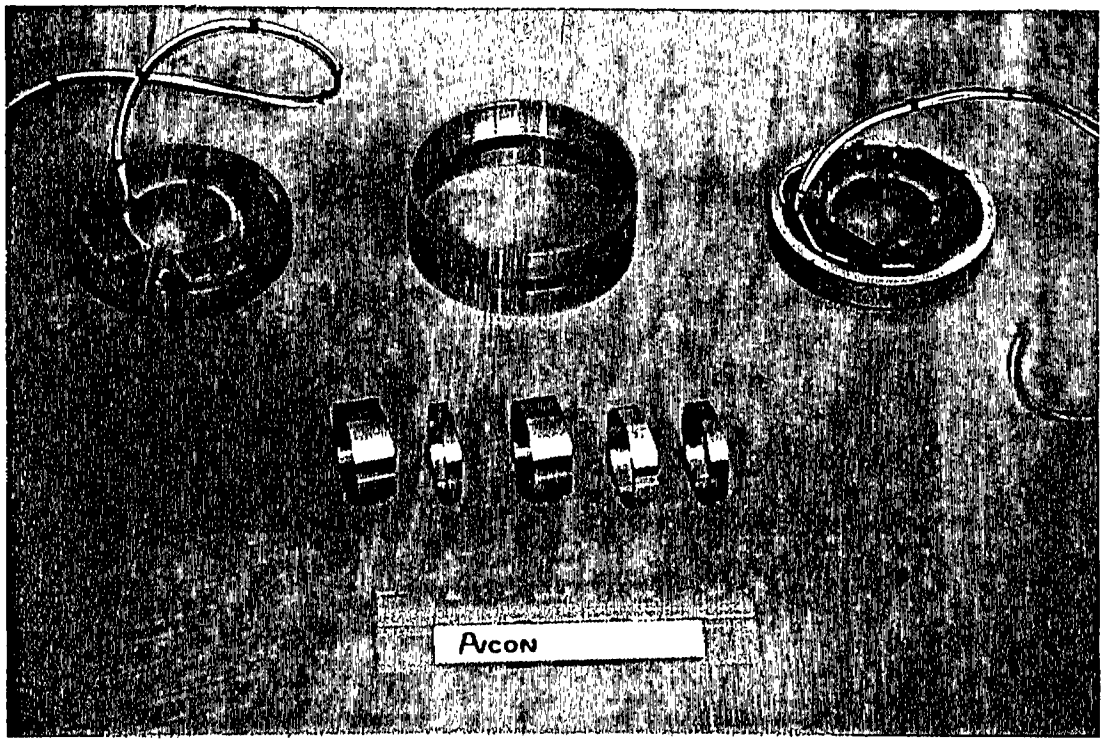

240# PERMANENT MAGNET BIAS RADIAL BEARING

CVG7

COMBINATION RADIAL/AXIAL BEARING SIMPLIFIES APPLICATIONS

AVCON, Inc.
Advanced Controls Technology

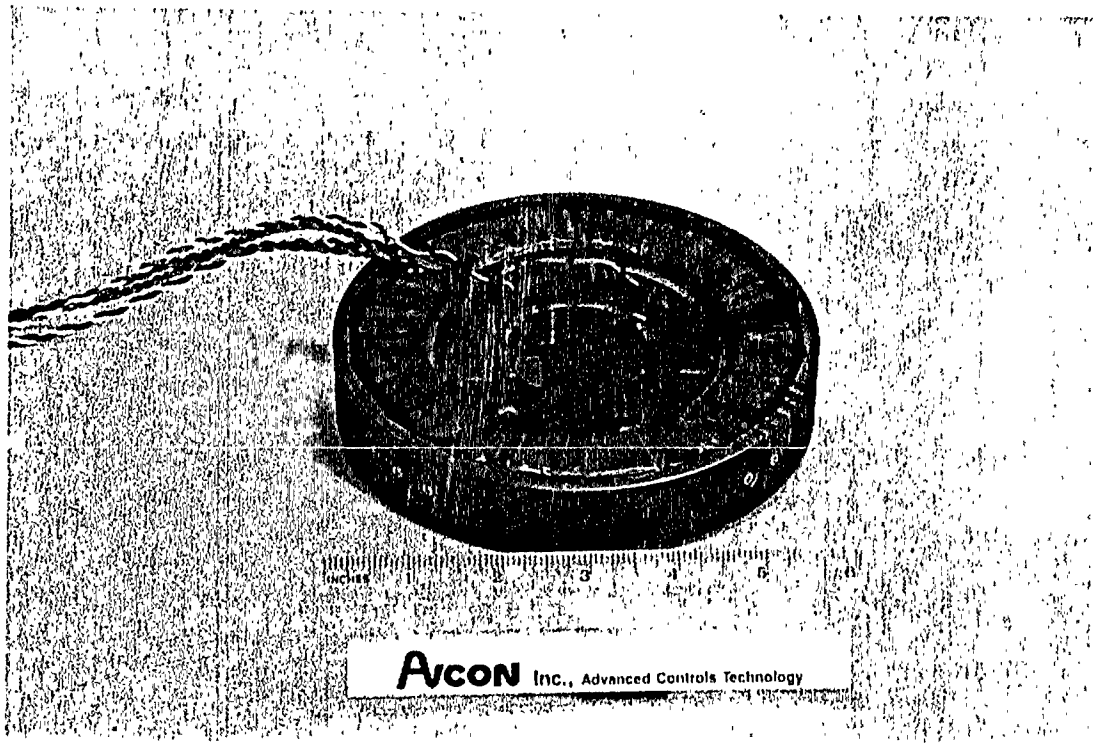

200 Pound Load Capacity
Radial and Axial Combination Bearing

FLYWHEEL MAGNETIC BEARINGS ARE NOW OPERATING IN ESF SYSTEM

AVCON
Advanced Controls Technology

- **Radial Load Capacity:**
  120 lbs.

  Axial Load Capacity:
  180 lbs.

- **Designed for Speeds up to:**
  100,000 RPM

- **Normal Input Power:**
  ~1.0 Watts

- **Input Power @ Maximum Load:**
  Radial : 18 Watts
  Axial : 16.0 Watts

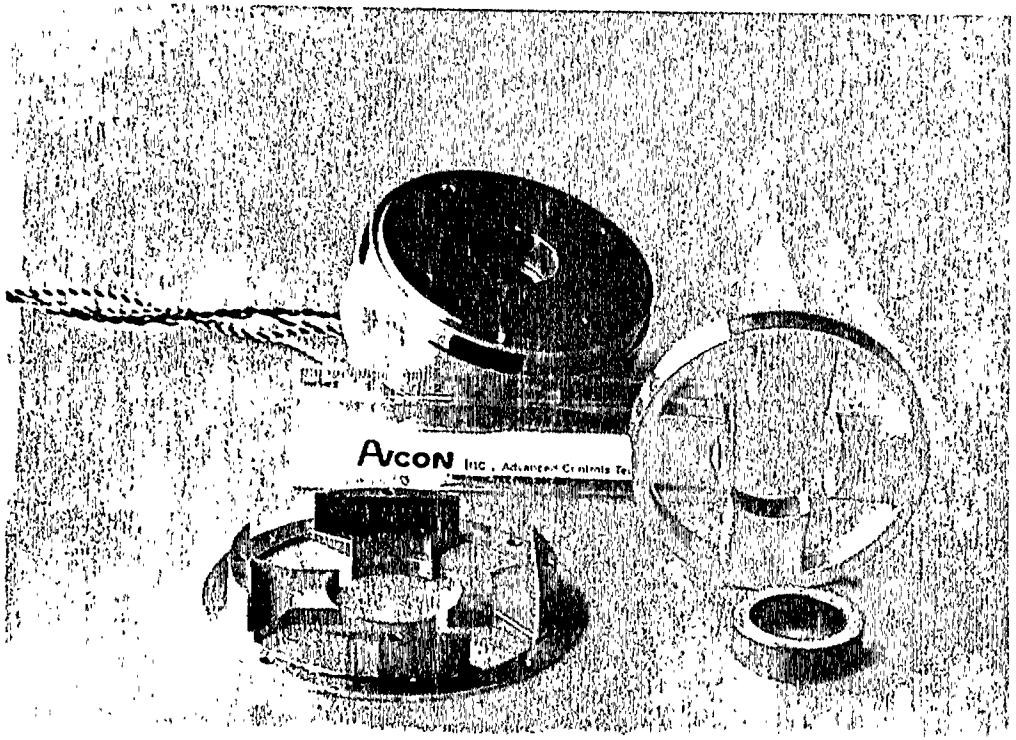

LARGE MAGNETIC BEARING FOR AIRCRAFT GAS TURBINE ENGINE

AVCON
Advanced Controls Technology

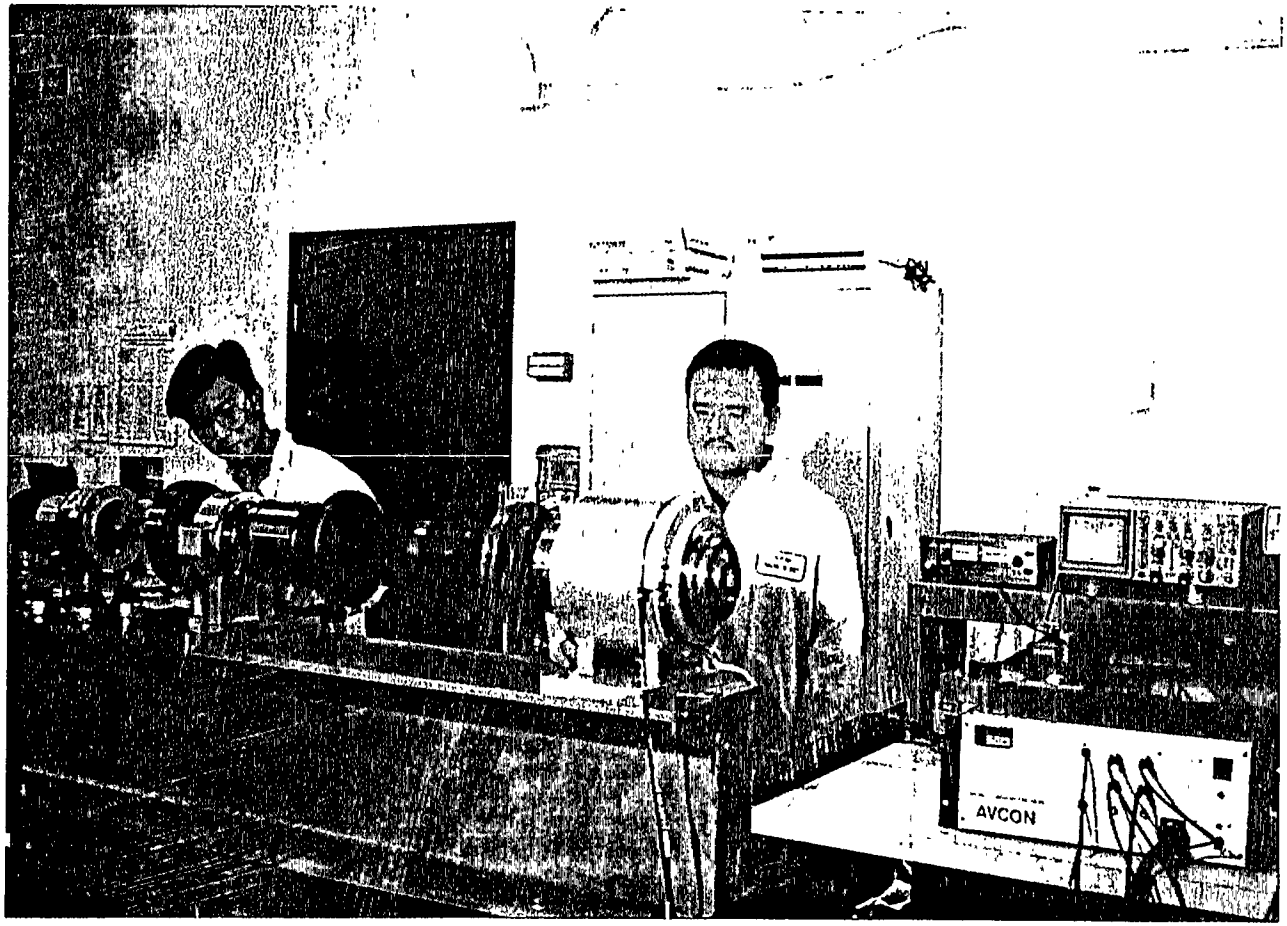

RADIAL LOAD CAPACITY = 1000 POUNDS; BEARING WEIGHT = 20 POUNDS
BEARING SIZE: 6.0 INCH DIAMETER SHAFT: BEARING O.D. -8.79 INCH; LENGTH = 2.8 INCH

CVG10

FLYWHEEL MAGNETIC BEARING DEVELOPMENT ACTIVITIES at AVCON

1992 1993 1994 1995

FLYWHEEL BEARING FEASIBILITY TESTS

COMBO RADIAL & AXIAL LOAD BRG

FLYWHEEL SYSTEM DEVELOPMENT

- U S Flywheel
- ARPA/UT CEM Bus Wheel
- ARPA/UT CEM Railroad Wheel

14 MAGNETIC BEARING SYSTEMS HAVE EVOLVED INTO SUITABLE FLYWHEEL BEARING TECHNOLOGY

- 3 Liquid Oxygen Turbopump Feasibility Bearings
- 3 - 12,000 rpm, 4 pound rotor machines
- 2 - Aircraft gas turbine engine simulator bearings for 24,000 rpm, 500 & 1000 pound loads
- 1 set Auxiliary power unit bearings for 60,000 rpm and loads up to 200 pounds
- 1 set Air conditioner compressor bearings for 44,000 rpm and loads up to 100 pounds
- 1 set Optical scanner bearings for oscillatory motion and loads up to 5 pounds
- 1 set Liquid Oxygen Turbopump simulator bearings for 20,000 rpm, and loads up to 2,400 pounds
- 2 sets Energy storage flywheel bearings for up to 100,000 rpm and loads up to 100 pounds

TABLE 1. MAGNETIC BEARING SYSTEMS DELIVERED BY AVCON AND IN OPERATION

MACHINE TYPE	QTY.	LOAD CAPACITY	CUSTOMER	OPERATING SPEED	OPERATING TIME
Liquid Oxygen Turbopump Simulator [1]	3	500 lbs.	NASA Lewis	15,000 RPM	>5,000 Hours
5-Axis Magnetic Bearing Demonstrator	2	100 lbs.	UTRC; Chinatech	10,000 RPM	>5,000 Hours
5-Axis Magnetic Bearing Demonstrator	1	100 lbs.	Avcon Life Test	12,000 RPM	>6,000 Hours*
Helium Circulation Fan [2]	1	250 lbs.	Union Carbide	16,000 RPM	2,000 Hours
Aircraft Gas Turbine Engine Simulator	1	1,300 lbs. radial; 2,000 thrust	U.S. Air Force	24,000 RPM (Tested to 15,00 RPM to date)	>200 Hours
Aircraft Gas Turbine Engine Simulator	1	500 lbs. radial	Pratt & Whitney	24,000 RPM (Tested to 1,200 RPM)	>1,000 Hours*
Auxiliary Power Unit	1	200 lbs. radial; 800 thrust	Allied-Signal	60,000 RPM (Tested to 44,000 RPM)	>200 Hours
Air Conditioning Compressor	1	150 lbs. radial; 100 thrust	Turbo Research	40,000 RPM (Tested to 43,600 RPM)	>50 Hours
Optical Scanner	1	5 lbs. radial; 5 thrust	SAGEM	Approx. 400 RPM (Oscillatory)	<100 Hours
Liquid Oxygen Turbopump	1	2,400 lbs. radial; 300 lbs. thrust	NASA Marshall Space Flight Center	20,000 RPM (Tested to 10,600 rpm to date)	<100 Hours
Energy Storage Flywheel	1	100 lbs. radial; 150 lbs. thrust	Private Investor Group	100,000 rpm (Tested to 15,000 rpm to date)	Approx. 200 Hours

[1] This is a two-axis radial bearing only. [2] This is a single axis thrust bearing. [3] This system is not under life test at AVCON.

TABLE 2. MAGNETIC BEARING SYSTEMS UNDER CONSTRUCTION OR TEST AT AVCON

MACHINE TYPE	QTY.	LOAD CAPACITY	CUSTOMER	OPERATING SPEED
Centrifugal Pump	1	1,450 lbs. radial; 4,000 lbs. thrust	Saudi Arabian Oil Co. (ARAMCO))	3,600 RPM
Energy Storage Flywheel	4	100 lbs. radial; 150 lbs. thrust	Private Investor Group	100,000 RPM
Air Conditioning Compressor	1	150 lbs. radial; 100 thrust	Turbo Research	40,000 RPM

VWG282

Uninterruptible Power Systems (UPS) with Super Synchronous Motor/Generator Flywheel Energy Storage

Presented at:

The Flywheel Energy Storage Workshop
Oak Ridge, TN

October 31, 1995

Pat Clarke
Clarke Associates

Clarke Associates
244 Sagamore Drive
Murray Hill, NJ 07974
908-508-1400

Uninterruptable Power System (UPS) with Super Synchronous Motor/Generator Flywheel Energy Storage

Introduction

This memorandum describes a new UPS concept with a Super Synchronous Motor/Generator Flywheel Energy Storage System, which is expected to be competitive with conventional battery UPS Systems. An arrangement of electromechanical components (motors/generators) are used to charge and discharge the flywheel (see Figure 1). Power electronics as required by the conventional UPS are eliminated. This concept when compared with conventional battery backed up UPS systems has the following advantages:

- Does not require a battery, eliminating the maintenance and problems associated with batteries. Renewed interest in flywheels as an alternative storage medium for electrochemical batteries has been stimulated by recent advancements in flywheel materials. For example current composite graphite flywheels exhibit an energy density (W-hr/kg) 10 times greater than steel flywheels [Ref. 1]. In addition, average energy density of a composite graphite flywheel is at least 3 times the energy density of a lead-acid battery [Ref. 2]. A recent technical assessment prepared by Abacus Technology Corp., a technical consulting firm in Chevy Chase, MD, for the US Department of Energy (DOE) Office of Transportation Technologies, Electric and Hybrid Propulsion division stated, "Flywheels have the theoretical potential to equal or better every one of the US Advanced Battery Consortium's battery goals, with the possible exception of purchase price at least until production volumes increase" [Ref. 3].
- Simple more rugged design.
- Can easily be integrated with an internal combustion engine (ICE) for long term back up. Speed regulation of the ICE not required.
- Isolated AC or DC outputs easily implemented at minimal cost. Simultaneous AC and DC voltage outputs are also possible. Regulation to at least plus minus 5% can be achieved without the need for supplemental regulating techniques. The resulting regulation is a natural consequence of using a frequency regulated synchronous machine (SSM/G) to derive the output(s). Three phase to three phase, three phase to single phase, single phase to three phase, as well as single phase to single input/output voltage combinations can be accommodated.
- Low maintenance. While this system contains arrangements of brushes and slip rings, this should cause no major maintenance problem. The brushes and slip rings are only active during the charge and discharge cycles of the system. Brushes suitable for operation in this system have brush life in excess of 5,000 hours. Thus the system could surive at least one 8 hour power outage every week for five years before brush replacement is required.
- High efficiency.
- High Power Factor
- Low harmonic currents.

Super Synchronous Machine SSM/G

The stator of a conventional synchronous machine contains phase windings with a fixed number of poles and is stationary. The rotor consists of one or more DC magnetic pole pairs equal to the number of stator pole pairs. The rotor poles can be either permanent magnets or separately excited. When operated as a motor the rotor turns at a fixed speed known as synchronous speed, n_s. The synchronous speed is a function of the line and the number of poles.

$$n_s \doteq (120 f) / p$$

Where p is the number of poles and f is the line frequency.
When operated as a generator torque is applied to the rotor by a prime mover to generate a voltage with frequency f_1, where,

$$f_1 = (n_1 p) / 120$$

n_1 is the drive shaft speed of the prime mover.
When the prime mover is a flywheel the frequency will vary directly as the speed of the flywheel. Clearly an unacceptable situation. However, we can overcome this limitation by introducing an additional degree of freedom into the synchronous machine's design by allowing the stator to rotate as well as the rotor. By maintaining the differential speed between the rotor and stator fixed at the synchronous speed, the generated frequency will be fixed and equal to the line frequency. A synchronous machine with this configuration is known as a super synchronous machine.

A super synchronous machine SSM/G is shown in Figure 1. [Ref. 5]. The super synchronous machine was developed a number of years ago by General Electric Inc., to allow heavy torque loads to be started by means of a synchronous motor. The super synchronous machine only differs from a conventional synchronous machine in that it has provisions for both the stator and rotor to rotate. Power is supplied to the system by means of brushes and slip rings. When the drive shaft is at rest the stator rotates at synchronous speed n_s, in a direction opposite to the normal direction of rotation. To start the load a pony brake is used to apply torque to the stator structure to slow it down, a reaction torque is developed in the rotor causing it to rotate. The braking action in the stator is increased until the rotor reaches synchronous speed. The stator is now at rest and can be locked in a fixed condition. In this concept a differential homopolar motor generator pair HM1 and HM2 are used to maintain the differential speed of the stator and rotor equal to the synchronous speed n_s

$$n_s = n_1 + n_2$$

Consequently, the frequency of the of the voltage at the terminals of SSM/G is always equal to the line or source frequency (e.g. 60 Hz). Thus, the stator windings of SSM/G can be connected to the AC line input to accept power into the system during system charging and standby, and maintain line frequency power during discharge.

Homopolar Motor/Generator

Also shown in Figure 1 are homopolar machines HM1 and HM2. The homopolar DC machine is characterized by:

- High Efficiency — 90% or greater. No hysteresis or eddy current losses.
- Commutator — None, slip rings and brushes required.
- Torque — High Peak Torque Capabilities.
- No armature reaction effects.
- Construction — Simple.
- Weight — Low.
- Cost — Low.

The homopolar or acyclic machine is a device in which the active conductors everywhere encounter magnetic flux of the same polarity. As a result, it does not experience the usual eddy current or hysteresis losses of all rotating machines. Basically it is an acyclic machine and requires no commutator. Figure 2

illustrates the homopolar principle with a device infinite in extent in all directions, a uniform air gap, time-invariant magnetic field, and a conductor in the form of a copper sheet moving along the gap. An electric field will be established in the copper sheet as a consequence of the relative motion of the copper sheet in the magnetic field. Energy can be extracted from this system by making contact with the copper sheet at appropriate places and connecting an electrical load. Clearly the structure described is unrealizable, because of its infinite dimensions. A practical approximation, at least in one direction, can be attained by closing the air gap back on itself in a homopolar structure with cylindrical symmetry. Such a structure is the axial-type homopolar machine shown in Figure 3. The armature winding is a hollow copper cylinder mounted on the armature structure. The brushes make contact with the cylinder at each end. The magnetic flux is induced by the magneto motive force produced by direct current in the field coils. The magnetic flux crosses the air gap radially with almost constant density in the narrow air gap, traverses the pole pieces, and closes around the stationary iron structure. It is, of course, necessary to limit the axial length of the machine. Therefore, the structure departs from the ideal endless extent in one direction. However, the effects arising from the finite length in the axial direction are not significant because the length of the air gap is extremely small in comparison to the axial length of the machine. Because of its single conductor, the homopolar generator is a low voltage device. The open circuit voltage V across the brushes is,

$$V = 1/5(Blv_g) \times 10^{-8}$$

l — length of the active conductor in the air gap (inches).

B — magnetic flux density in the air gap (lines per square inch).

v_g — tangential velocity of the copper cylinder (feet per minute).

Practical considerations limit v_g to approximately 36,000 ft./minute by centrifugal stress in the rotating conductor, and B is limited to 110,000 lines/ft^2 by saturation of the iron. Construction considerations limit the length of the copper cylinder to about three feet. Therefore, the maximum magnitude of V is about 285 volts. This has limited the commercial use of homopolar machines to applications requiring low voltages and high currents i.e. resistance welding, electrolytic processes, fault detection in railroad tracks, and in marine service to excite large shipboard "degaussing" cables. However, this machine is ideally suited for this application being small, high speed and efficient. The low voltage is of little concern since it involves two machines that act interchangeably as a motor generator pair. The voltage generated at maximum speed is expected to be about 20 volts.

Armature reaction in electrical machines is caused by current flow in the machines active conductors. The most serious effect of armature reaction is to increase the flux densities in the machine's iron structure which provides the magnetic flux path. In extreme cases, due to overloads, saturation of the iron can occur. This effect will reduce the machines efficiency by increasing losses and alter the terminal characteristics of the machine. In commutated DC machinery, commutation problems, due to armature reaction can only be avoided by limiting the armature current and restricting the overload rating of the system. The homopolar machine is at an advantage because saturation can be easily avoided by screening the outer iron structure with a compensating shield carrying a current equal in magnitude and opposite in direction to the armature current. This is shown in Figure 3. Two concentric copper cylinders are used one fixed to the iron structure, the other free to rotate. The armature current then flows in opposite directions in the moving conductor and in the stationary shell, the azimuthal magnetic field produced by the armature currentscan only exist in the space between the concentric cylinders. Armature reaction is eliminated and the overload capabilities of the machine are limited only by thermal considerations. In many machines the copper cylinders are not used and the current is allowed to flow in the iron surface of the field structure.

Brushes for homopolar machines are critical because of the machine's low voltage, high current characteristics. It is essential to keep the losses associated with the brush current collector apparatus low in order to achieve high system efficiency. Brush losses are of two types: mechanical, due to the brush friction riding on the slip ring surface, and electrical, which is a function of brush voltage drop. The strategy generally employed for homopolar machines is to operate the brushes at the highest current

densities practical to minimize brush area in contact with the slip ring so as to reduce the frictional brush losses. Renewed interest in homopolar machines, for ship propulsion and inertial energy machines for fusion power, has stimulated research and development of extremely high current density brush current collection systems. Investigators in this field have reported on brush systems operating at 1,800 A/in^2 at speeds up to 65,000 ft/min.

Conventional monolithic solid brushes for electrical power transfer in sliding contacts are made of graphite, carbon graphite, or metal graphite composites. Recent discussions with several slip ring and brush manufacturers indicate that operation of graphite brushes at speeds of 25,000 ft/sec and current densities of 140 A/in^2 are realistic and practical for homopolar machines. The voltage drop per brush pair is expected to be about 0.5 volts or less.

However, as pointed out below, in this application when the system is fully charged the brush speed is either zero or its current is zero. The brushes with zero current can be lifted from the slip rings. Thus, extremely low brush wear can be achieved, allowing the system to experience many charge and discharge cycles before any significant brush wear occurs. Consequently, brush maintenance should not be a major consideration.

System Operation

The HM1 drive shaft is connected to the SSM/G rotor and flywheel shaft. The drive shaft of HM2 is connected to the SSM/G stator structure. See Figure 1. When the system is first initialized contactor CT is closed, the flywheel shaft is assumed to be at rest, n_1 is zero and n_2 is equal to synchronous speed n_s. HM2 functions as a generator and supplies power to HM1 which acts as a motor. Field current If_1 of HM1 is adjusted to its maximum value and If_2 of HM2 is maintained at a value to control the armature current I_a at the required value. During normal operation the control circuit adjusts both field currents consistent with the desired operating condition. HM1 applies a torque T_1 to the flywheel shaft causing it to rotate. HM2 applies a torque T_2 to the stator of SSM/G. The total flywheel torque T_{FW} can be calculated as follows,

$$T_{FW} = T_1 + T_2$$

The input power Pin is,

$$Pin = (n_s T_2)/7.04$$

and the output power Po is,

$$Po = (n_1 T_{FW})/7.04$$

When a torque is applied to the flywheel, it can be shown that,

$$T_2 = (n_1/n_s) T_{FW}$$

and

$$T_1 = [1-(n_1/n_s)] T_{FW}$$

It can also be shown that,

$$n_1 + n_2 = n_s$$

Thus, once the flywheel is accelerated to its maximum speed n_s, n_2 is now at zero. The brushes of both SSM/G and HM2 are at zero speed on their slip rings, reducing mechanical brush wear to virtually zero. The HM2 shaft can now be locked in position, T_1 and I_a are reduced to zero. The brushes of HM1 can be lifted from their slip rings eliminating mechanical wear on these brushes also. SSM/G now functions as a conventional synchronous machine maintaing the flywheel in a charged state. When the AC power fails contactor CT is opened and the above process is reversed to maintain AC power to the critical loads. The inertia of the system makes the transfer to flywheel energy operation virtually seamless. The flywheel will continue to supply energy to the system until its speed reaches half speed or the AC power returns. Thus, 75% of the flywheel stored energy is available to the system.

Table I shows some properties of a 20V homopolar machine operating over a range of maximum speeds. The flux density B was assumed to be 110,000 lines/in^2 where the surface voltage per inch V/lg along the armature cylinder is

$$V/_{lg} = \tfrac{1}{5} B v_g \times 10^{-8}$$

An optimal design is assumed where the flux density is uniform in all parts of the machine, therefore,

$$lg = rg \qquad r_o = \sqrt{2} rg \qquad \text{and } l_o = 2\,lg$$

and the volume Vol can be calculated

$$Vol = 4\pi \left({}^{lg}/_{12} \right)^3 ft^3$$

Table I
(V= 20 volts)

v_g ft/min	V/lg Volt/in	lg in	Vol ft^3	Weight lbs	P_H kWatts
10,000	2.2	9.09	5.46	2720	24,
15,000	3.3	6.06	1.62	805	16
20,000	4.4	4.54	.68	338	12
25,000	5.5	3.64	.35	175	9.6

Also assumed in Table I was a brush current density of 140 A/in^2, a slip ring width of 0.5 in, density of steel 498 lbs/f^3 and a 50% brush ring coverage factor. Under these asumptions P_H is the power handling capability of the homopolar machine. It can be expected that these machines will operate at an efficiency greater than 95%

Extended Time Operation Using An ICE

When extended back up power operation is required an ICE can be added to the system, as shown in Figure 4. During an input power failure and after a designed operational period the control system closes clutch C to start the ICE. Since the system's frequency is controlled by maintaining n_s constant, the system can accommodate a wide range of ICE speeds. Therefor, the speed of the ICE can be adjusted for its optimum performance. Again when power returns C is opened and the flywheel recharged.

Graphite Fiber Flywheel

When long term flywheel energy storage is required composite graphite fiber flywheels represents the modern choice. However, the above mode of operation limits the maximum speed of the flywheel to synchronous speed, which for a 60 Hz source is 3600 RPM for a two pole SSM/G. This would severely limit the energy storage capability of a graphite fiber flywheel. This can be overcome by introducing a permanent magnet motor generator pair at the output shaft of HM1 as shown in Figure 5. The flywheel can now be driven at a speed n_3 where,

$$n_3 = (p_2/p_1) n_1$$

p_2 is the number of poles on the flywheel motor, and p_1 is the number of poles on the generator. For a ratio of p_2/p_1 equal to seven the maximum flywheel speed is now 25,200 RPM, essential for effective flywheel energy storage. For example a flywheel 30 in. diameter by 27 in. long, weighing 620 lbs. rotating at 25,000 RPM provides 40 kW-hr for the system described above. A 2 in. long flywheel with the same diameter operated at 25,000 RPM weighing 50 lbs. stores 2kW-hr.

Isolated Outputs

The system output voltage can be isolated from the input AC source by providing an separate output winding on SSM/G as shown in Figure 6. Placing the SSM/G input and output windings in separate stator slots provides excellent isolation between the input and output voltages. Surges, sags, and transients appearing on the input will be greatly attenuated at the output terminals. In addition harmonic currents will also be heavily attenuated between the input and output, and visa versa

Conclusion

A new concept has been described that is expected to be a strong competitor in the UPS market place due to its, simplicity, competitive cost (for a cost analysis see Addendum A), high efficiency, long life, deep discharge tolerance, fast discharge/recharge possibilities, environmentally benign.

References

[1] "A High Efficiency Electromechanical Battery" — Richard F. Post, UCRL-SC-110861 Preprint.

[2] "How Competitive is Flywheel Energy Storage?" — Robert D. McConnel — Flywheel Energy Storage Technology Workshop — NREL & ORNL - Conf. 9311155 11/2-4, 1993.

[3] "Flywheels put a new spin on electric vehicles" — Steven Ashley — Mechanical Engineering, October 1993.

[4] A talk by John V. Coyner — "Flywheel Energy Storage Applications" — Oak Ridge National Laboratory Engineering Technology Division, Oak Ridge, Tennessee 37831.

[5] "Electric Machinery and Control" — Irving L. Kosow, Prentice-Hall inc., 1964, pages 271 and 272.

Addendum A

A cost comparison of a conventional UPS (15kW with 40kW-hr energy storage) with a flywheel UPS is shown in Table A [Ref. 2 & 4]. This cost comparison was derived from information presented at a "Flywheel Energy Storage Technology Workshop" program November 1993 sponsored by the Oak Ridge National Laboratory and the National Renewable Energy Laboratory.

Table A
UPS Cost
(15kW — 40kW-hr)
Battery Energy Storage

Power Electronics —	$125/kW
Battery (Pb-acid) —	$170/kW-hr

Flywheel Energy Storage

Electromechanical Components & Controls (Figure 1) —	$100/kW
Flywheel Assembly —	$74 to $225/kW-hr

Manufacturing cost and assumptions for the flywheel assembly are shown in Table B[4].

Table B
Flywheel Cost and Assumptions

Baseline Ultra Low Cost

Projected Cost of Manufacture —	$5/lb.	$5/lb.
Graphite Fiber (IM-7 Graphite Fiber) —	$8/lb.	$2/lb.
Resin Cost —	$1/lb.	$1/lb.
Fiber Volume —	75%	75%
Energy Utilization Factor —	0.75	0.75
Flywheel Rotor —	$200kW-hr	$40/kW-hr
Miscellaneous Structure —	$10/kW-hr	$7/kW-hr
Magnetic Bearings & Electronics —	$65/kW-hr	$20/kW-hr
Assembly —	$10/kW-hr	$7/kW-hr

Passive magnetic bearings now in development will have a significant beneficial effect on the above magnetic bearing and electronics cost. A full ball complement bearing package with oozing-flow lubrication is a low cost alternative to both passive and active magnetic bearings and should be considered for many applications. With increased flywheel rotor production, graphite fiber cost can be expected to be reduced. When the maintenance cost and life of the battery (3-6 years) versus the flywheel (>20 years) are taken into consideration, the flywheel UPS represents a very attractive alternative to the conventional UPS.

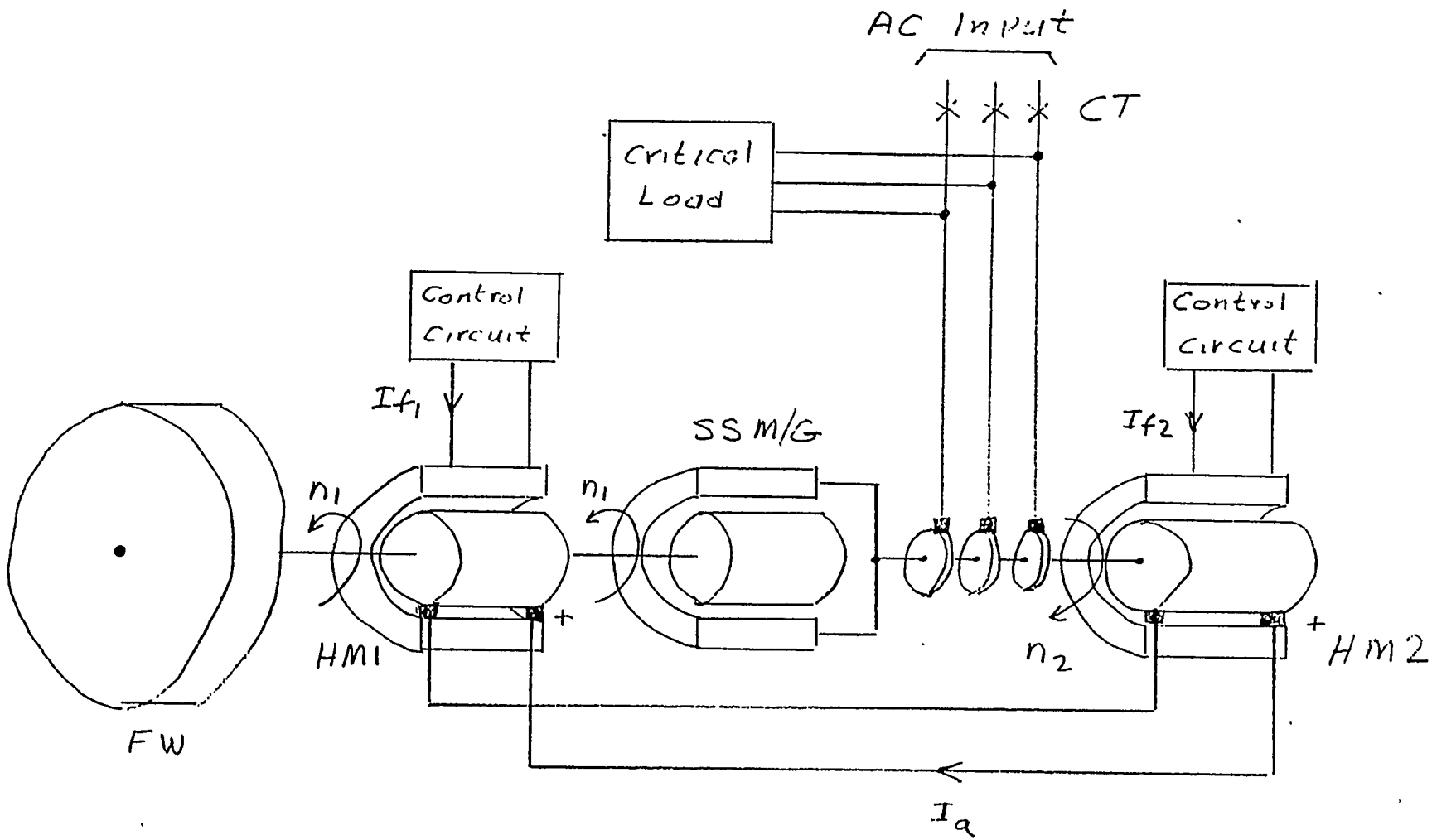

FIG 1

UWC
10/14/94

Proprietary Information
Clarke Associates / ADL

V9

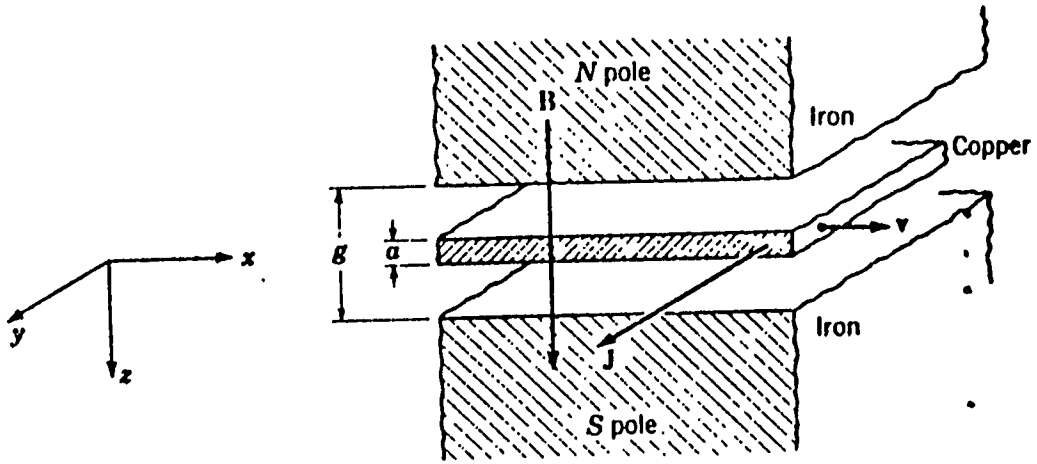

FIG. 2

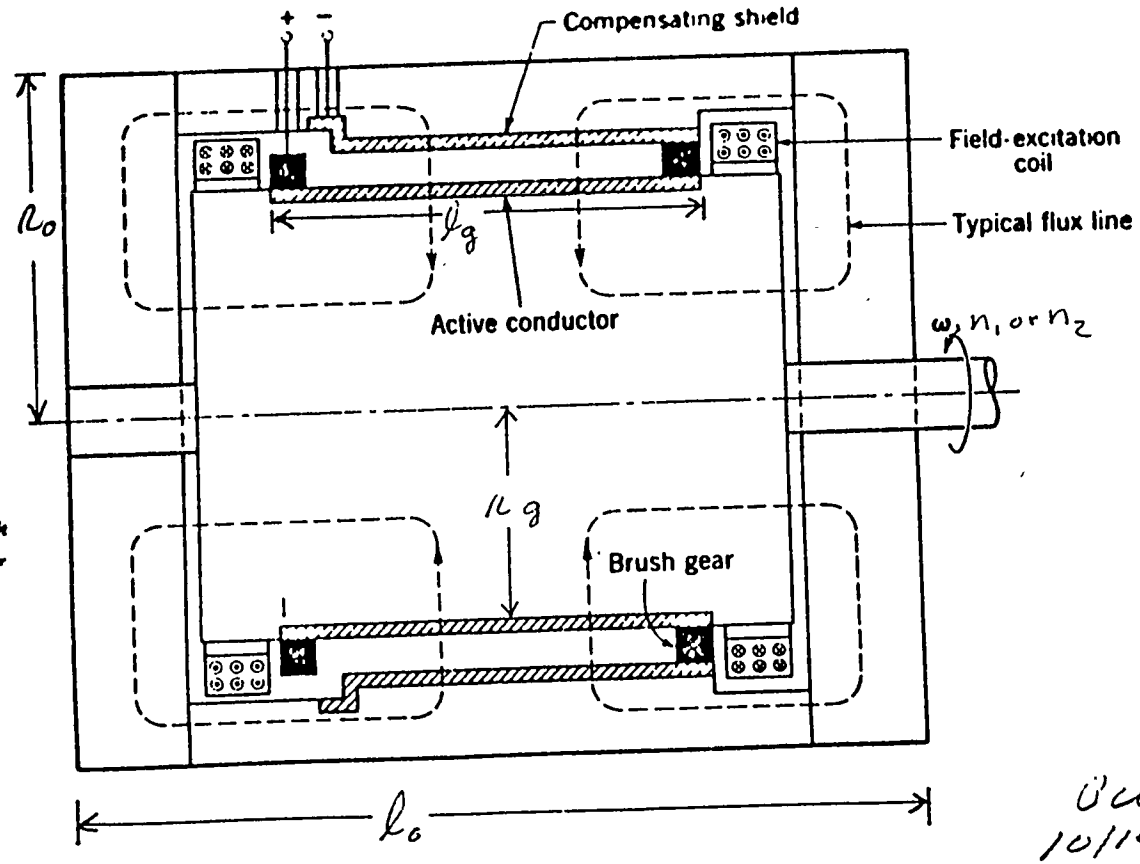

FIG 3

Proprietary Information
Clarke Associates/ADL

OWC
10/14/94

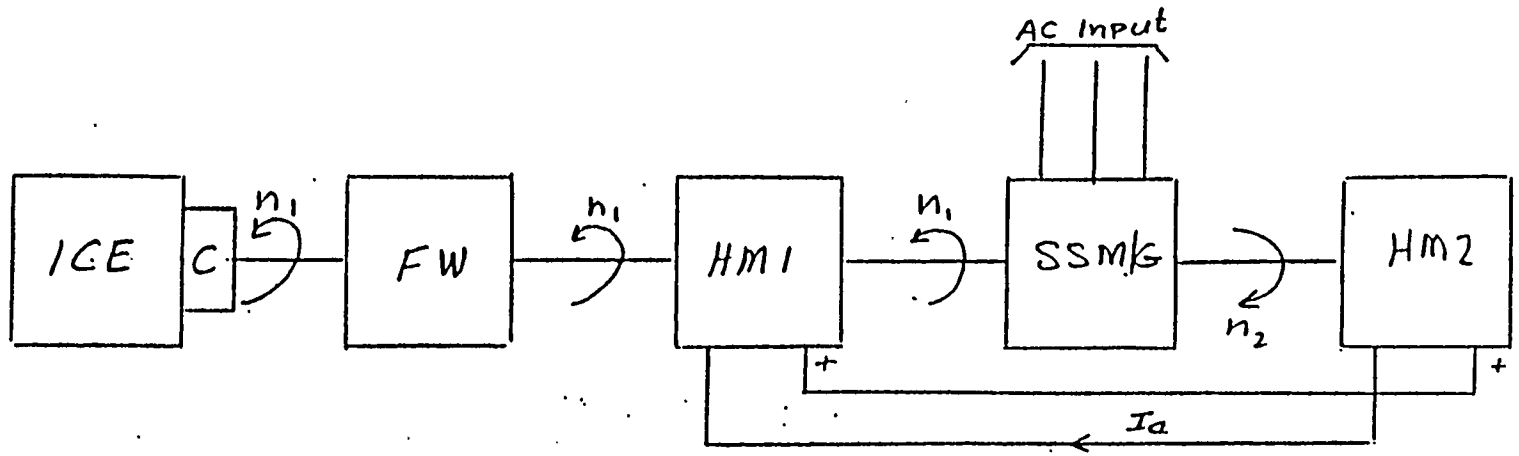

FIG 4

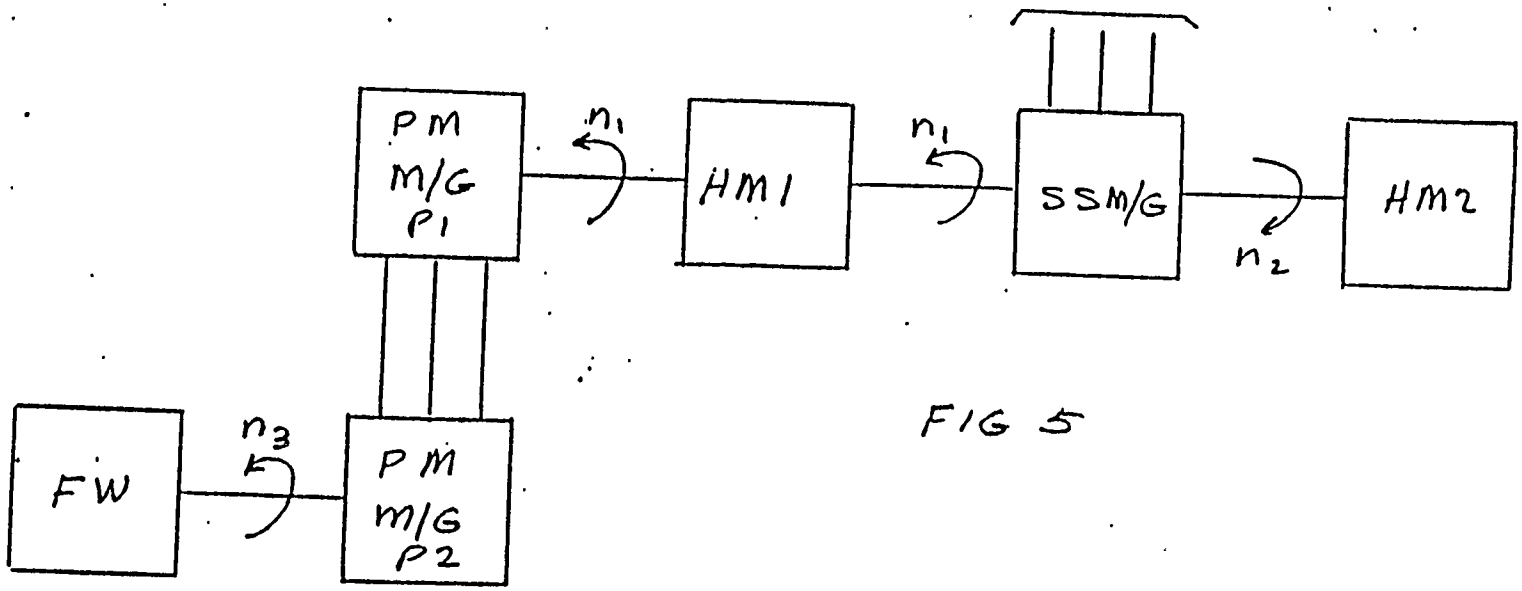

FIG 5

SS M/G

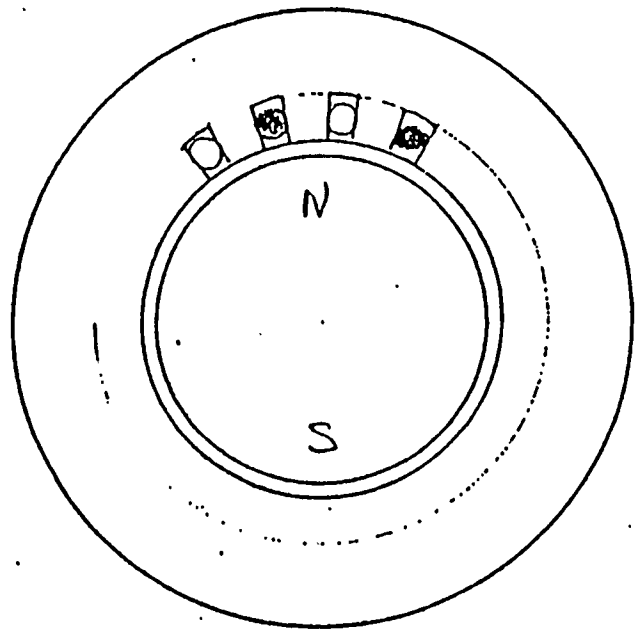

O – Input Winding

● – Output Winding

FIG. 6

Advanced Flywheel Design, Manufacturing and Testing at Penn State University

Composite Manufacturing Technology Center
Department of Engineering Science & Mechanics
Penn State University
University Park, PA 16802

Christopher W. Gabrys
Charles E. Bakis

Composite Flywheel Design Approach

- **Superposed Anisotropic Elasticity Solutions**

- **Loading Conditions**
  - Centrifugal Loading
  - Internal & External Pressures
  - Thermal Stresses
  - Residual Moments (from Manufacturing)

- **Satisfy Compatibility of Rings at Interfaces**
  (All Flywheel Rings stay Connected)

- **Satisfy Equilibrium at Ring Interfaces**
  (Adjacent Rings Exert Equal and Opposite Forces on Each Other)

Filament Winding

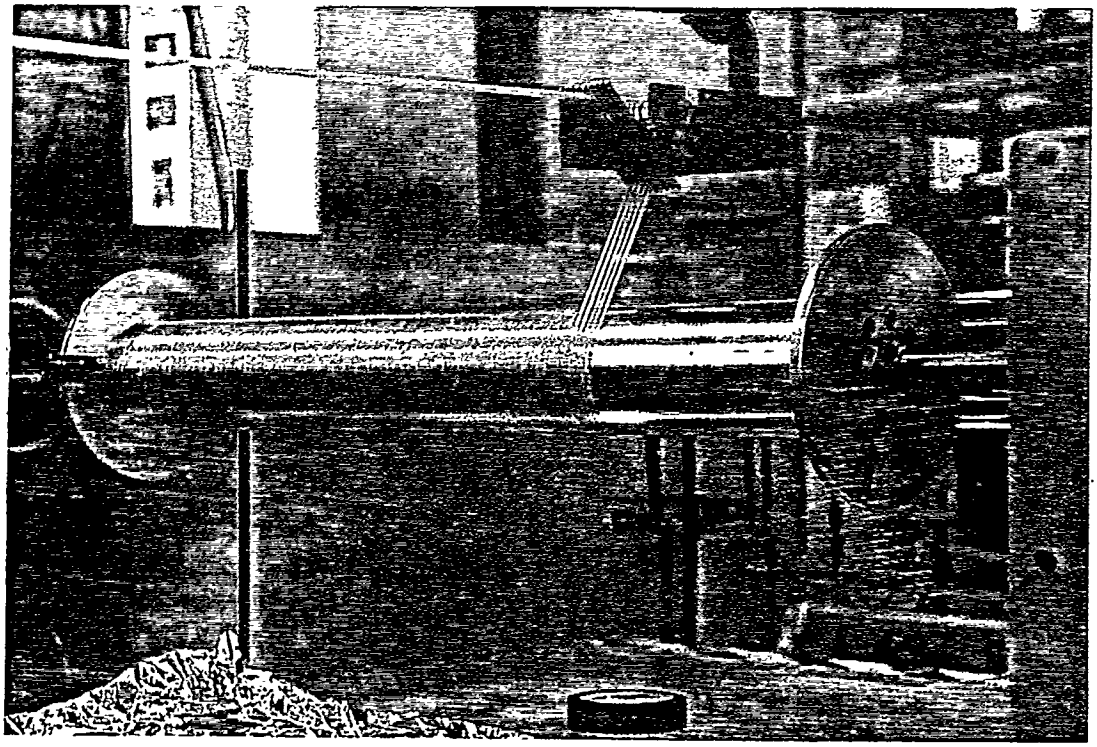

- *In Situ* Curing on Heated Mandrels

- High Quality Parts
  - 70% Fiber Volume Fraction
  - 2% Porosity
  - No Wavy Fibers
  - No Resin Rich Layers

- Ultra High Speed Manufacturing
  (Radial Deposition Rates > 8 inches/hour)

Micrograph of *In Situ* Cured Carbon Fiber/ Epoxy Ring

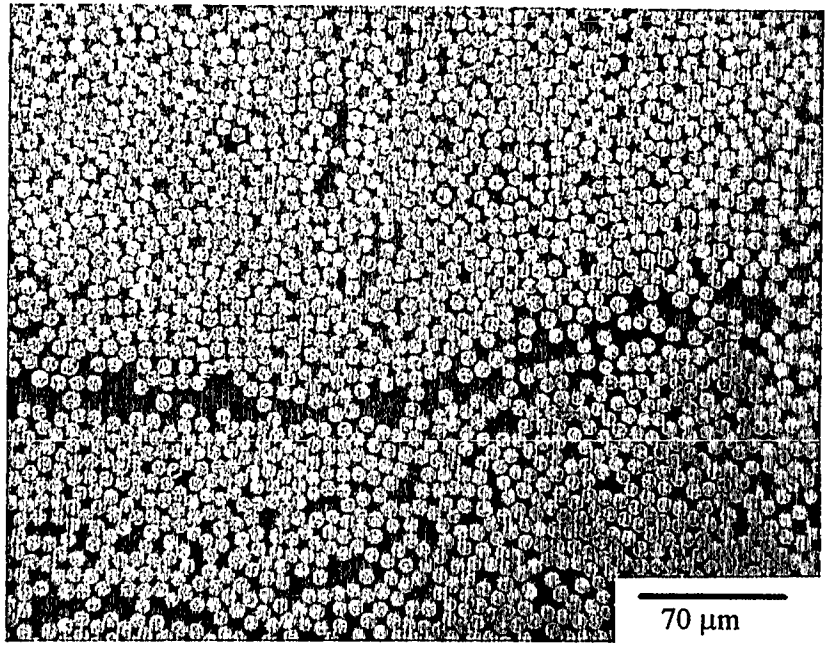

Composite Machining

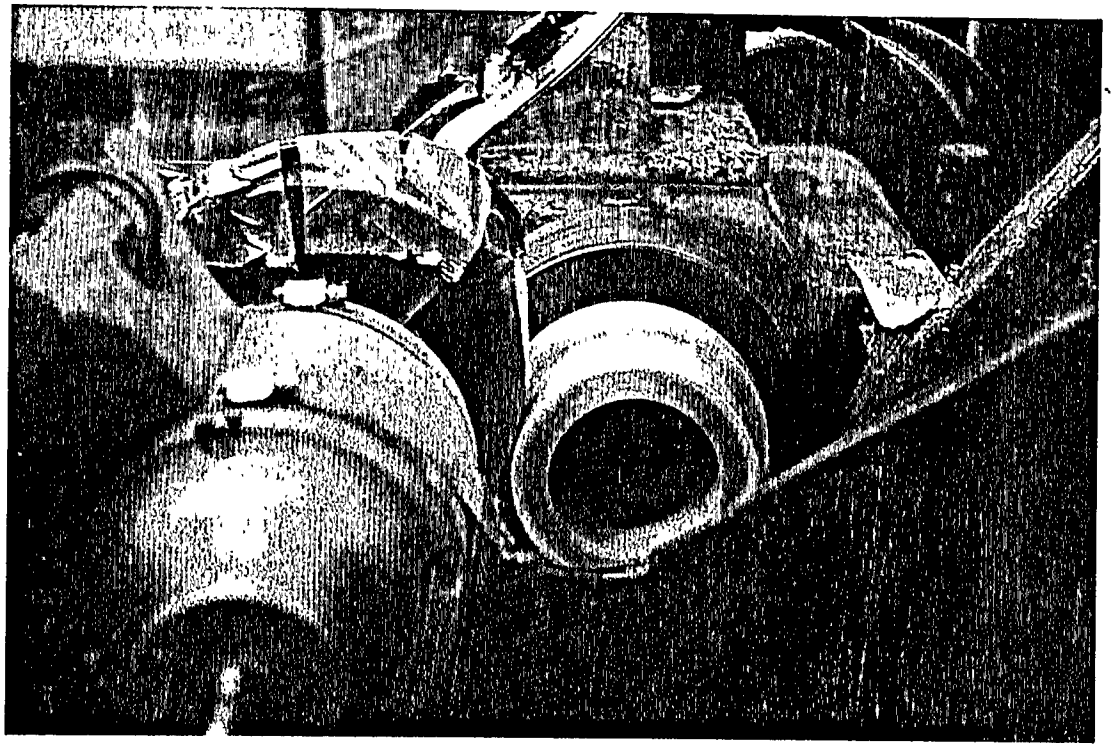

- Diamond Wheel Grinder on a Lathe
- Continuous Water Stream Cools and Reduces Dust

Press Fit Procedure

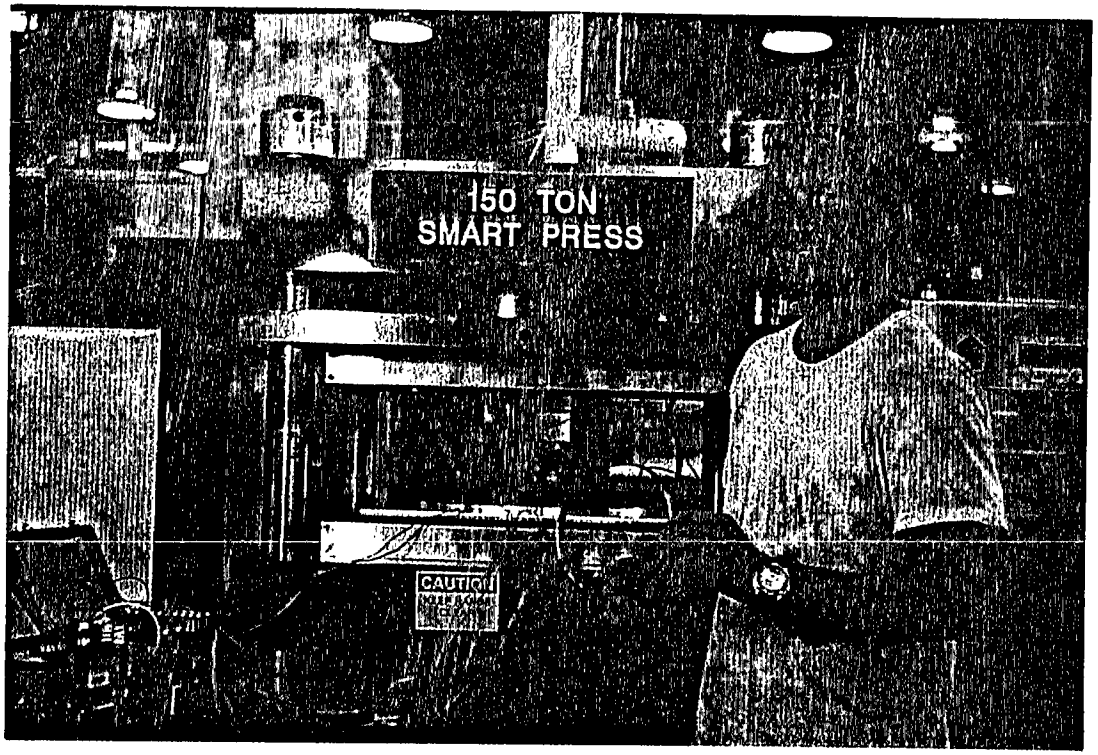

- Tapered ID of Outer Ring & Tapered OD of Inner Ring
- Epoxy Used as Lubricant at Interface

PSU Rotor X

- Complete Flywheel Battery
- Tests Motor/Generator & Magnetic Bearing Concepts

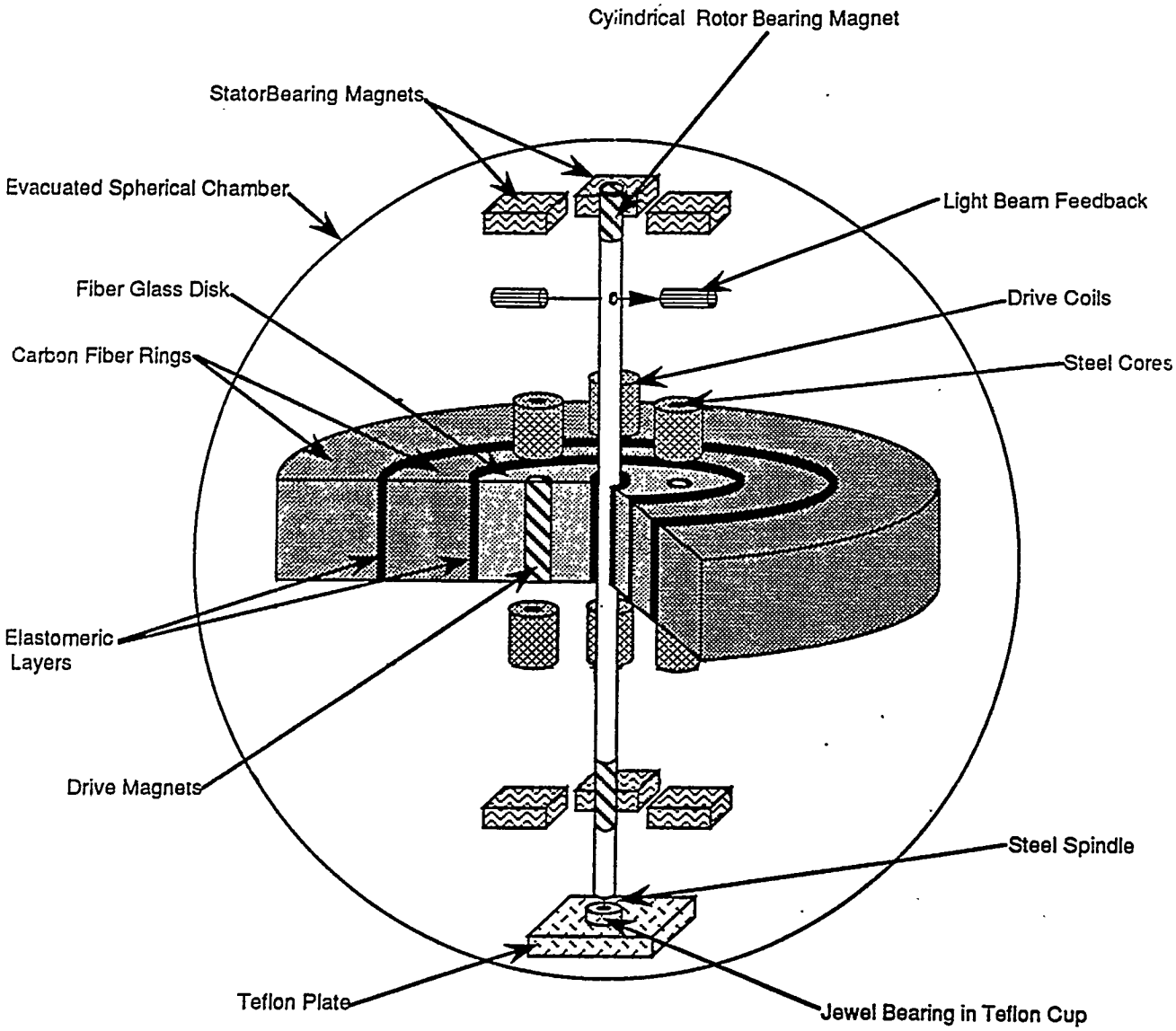

PSU Rotor X

- 3 Phase Homopolar Axial Gap Motor/generator
- Light Beam Feedback Provides Motor Commutation
- Movable Steel Coil Cores to Change Magnetic Circuit Reluctance
- Litz Wire Drive Coils to Reduce AC Losses
- .004 inch Thick Brass Cooling Bladder Cools Drive Coils in Vacuum

PSU Rotor Y

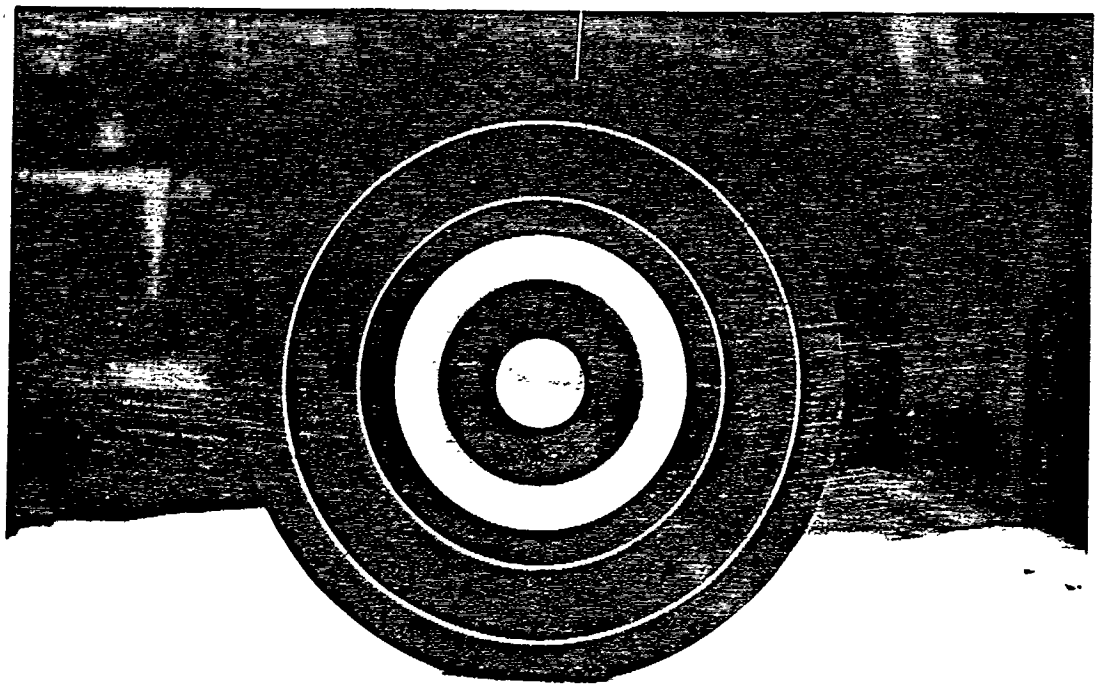

Rotor Y backlit to show its urethane layers.

- **3 Press Fits**
- **3 Urethane Interlayers**
- **Outer Rings use T1000 Carbon Fiber**
- **Predicted Failure Speed = 1714 m/sec**
- **Tested to 1101 m/sec**

Radial Stresses in PSU Rotor Y

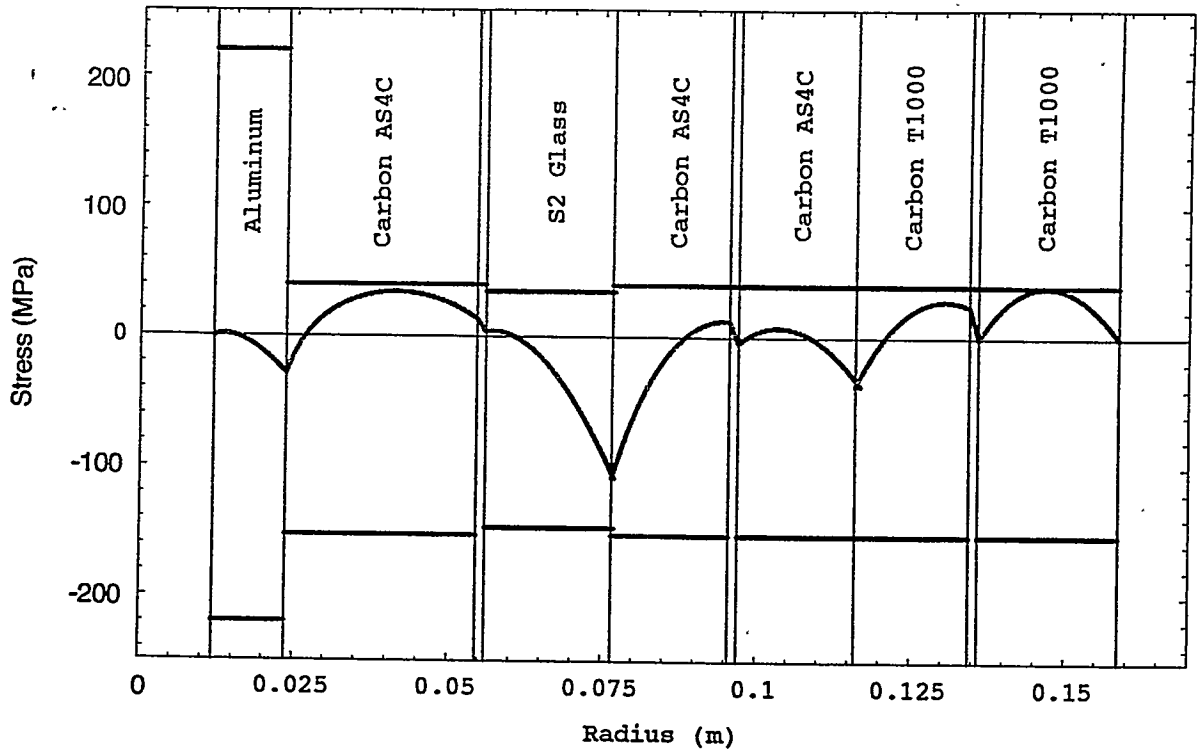

Hoop Stresses in PSU Rotor Y

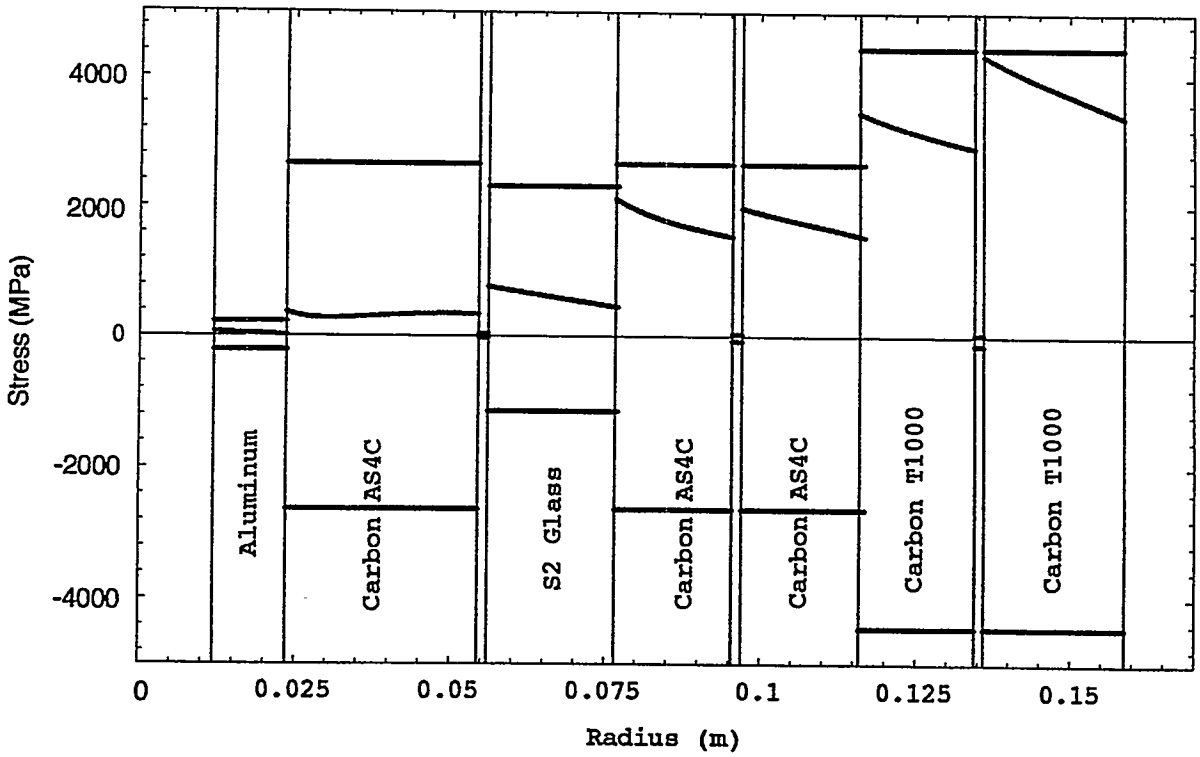

Use of Elastomeric Matrix Composites in Flywheels

Epoxy Matrix Flywheels

Elastomeric Matrix Flywheels

Carbon Epoxy Rim at 1200 m/sec

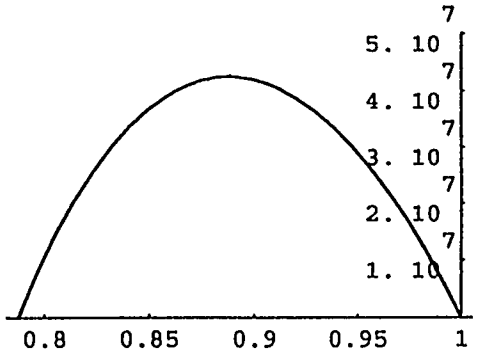

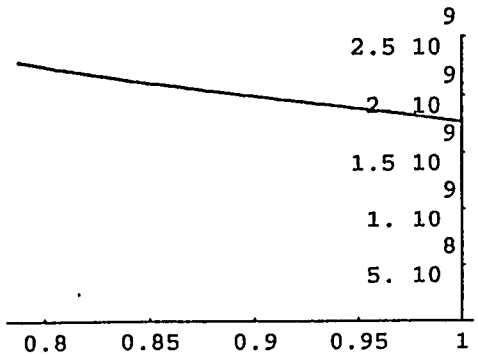

Ri/Ro

- Lower Radial Stress
  -> One Ring Flywheels

Radial Stress
(Pa)

- Maximum Hoop Stress at
  OD -> Benign Failure

Circumferential
Stress (Pa)

Carbon Urethane Rim at 1200 m/sec

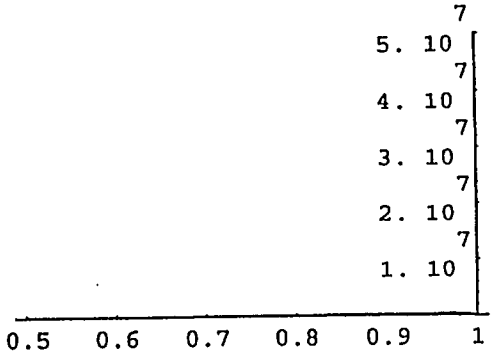

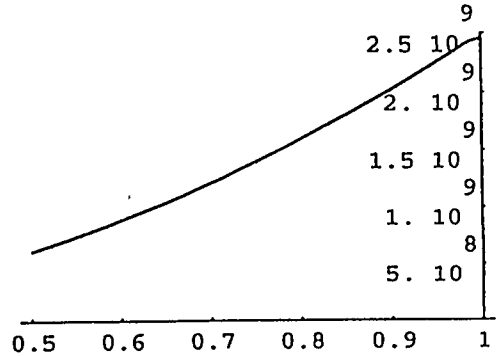

Ri/Ro

PSU Rotor Z

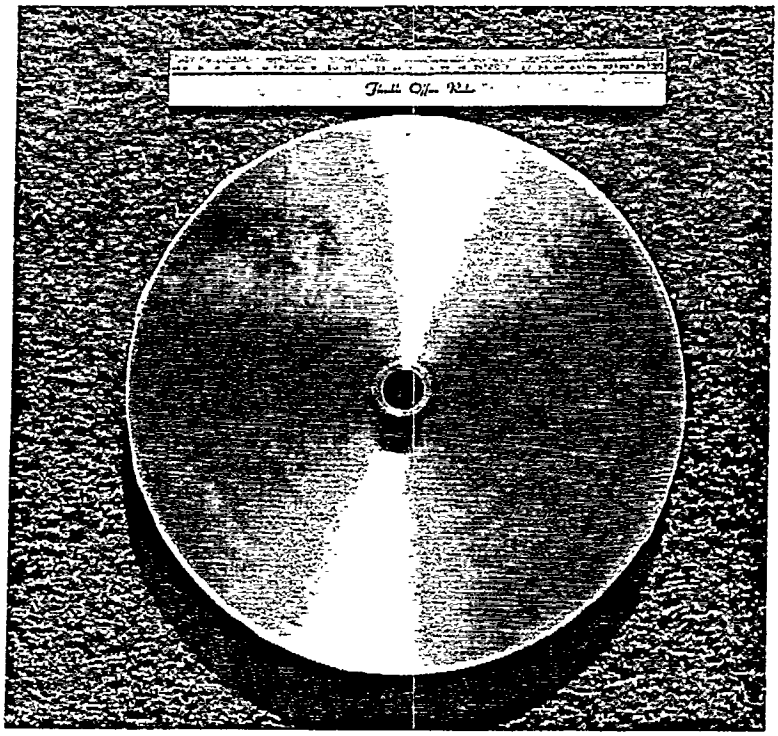

Rotor Z prior to machining of its OD.

- **Filament Wound Directly on to Hub**
- **Fabricated in only 75 Minutes**
- **Uses S2 Glass**
- **65% Fiber Volume Fraction with only 2.7% Porosity**
- **Predicted Failure Speed = 1065 m/sec**
- **Should Verify Non-Catastrophic Failure Mode**

Radial Stresses in PSU Rotor Z

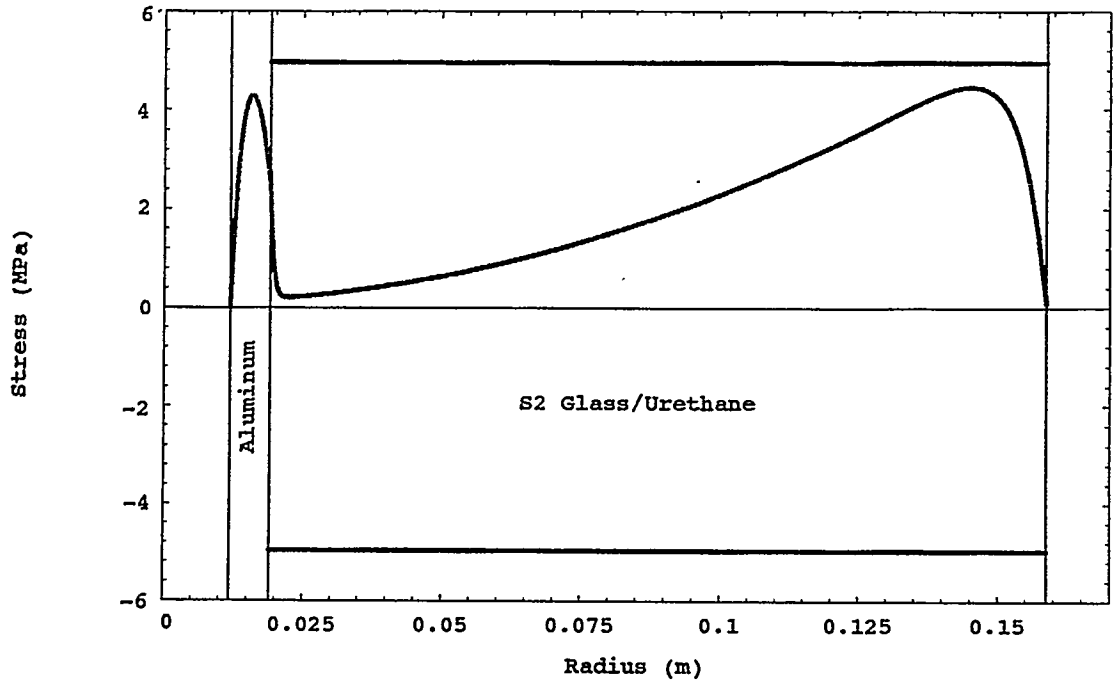

Hoop Stresses in PSU Rotor Z

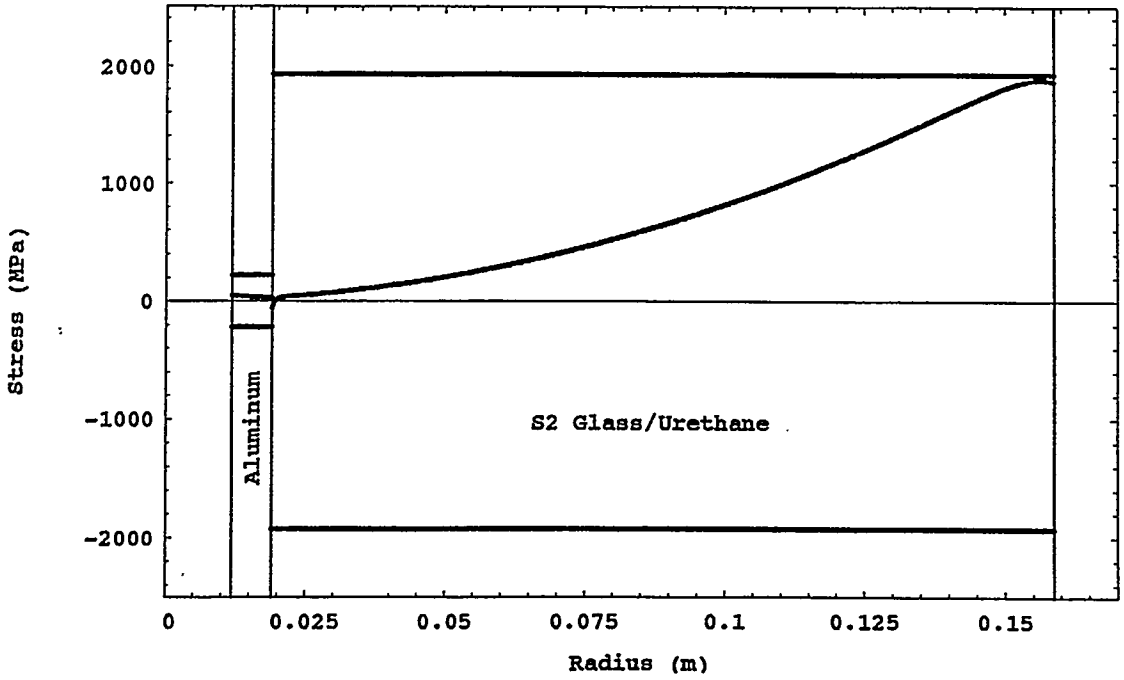

Spin Testing

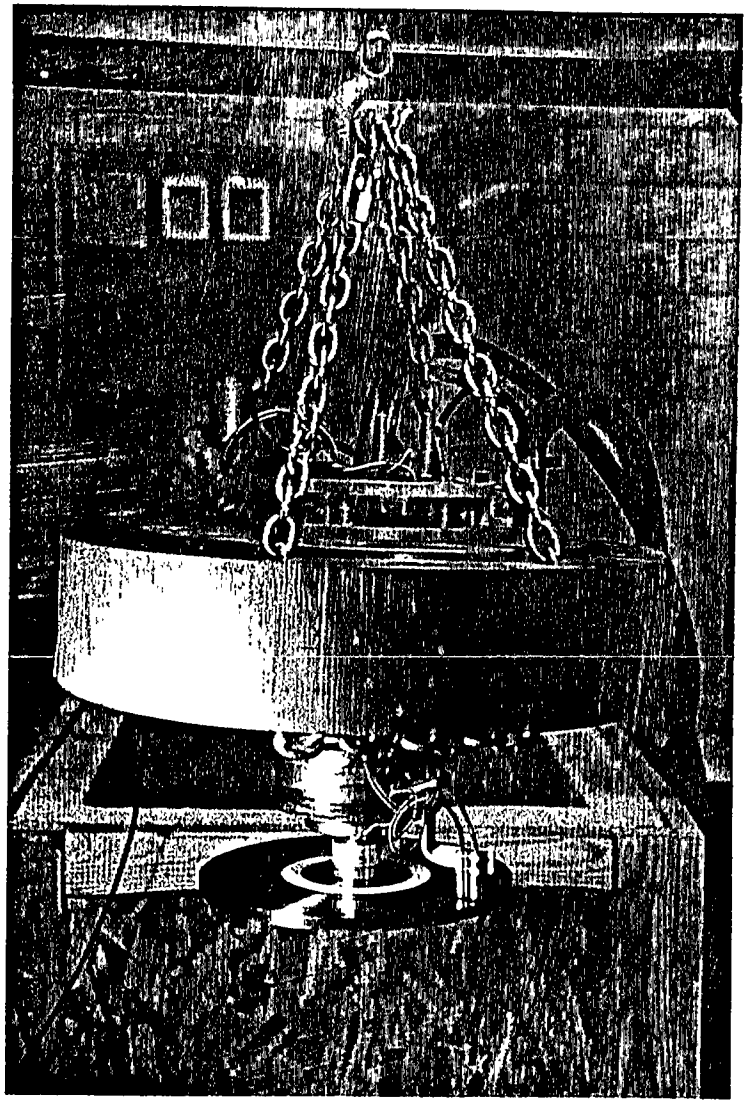

Infrared thermocouples detect aerodynamic and vibrational heating of spinning rotors.

- **2000 lb Evacuated Steel Chamber**
- **> 70 krpm Oil Driven Centrifuge Turbine**
- **Anchored with Springs to Reduce Torsional Impact Loads**
- **Surrounding Concrete Tomb**
- **Safety Retention Ring**

Future Work

- Continue Spin Testing
  - Elastomeric Matrix Rotors
    - Dynamic Characteristics
    - Benign Failure Mode
  - Higher Speed Failure Testing
- Development of Larger Rotors

  (Manufacture 250lb Rotors in 2 Hours)
- Development of Complete Flywheel Battery Systems

Flywheel Energy Storage Workshop

Attendees

Oct. 31 - Nov. 2, 1995

Oak Ridge, Tennessee

Robert Abboud
ComEd
10 S. Dearborn, 35 FNE
Chicago, IL 6060
(312) 394-2922 FAX (312) 394-2919

Don Adams
Oak Ridge National Laboratory
P. O. Box 2003
K-1008F, MS 7258
Oak Ridge, TN 37831
(423) 576-0260 FAX (423) 241-6124

William Allington
Oak Ridge National Laboratory
P. O. Box 2003
K-1004J, MS 7280
Oak Ridge, TN 37831
(423) 576-2885 FAX (423) 576-0424

John Andriulli
Oak Ridge National Laboratory
P. O. Box 2003
K-1004J, MS-7280
Oak Ridge, TN 37831
(423) 576-0424 FAX (423) 576-0279

Cyrus Ashtiani
Chrysler Corporation
30900 Stephenson Hwy
Madison Heights, MI 48071
(810) 583-5256 FAX (810) 583-5234

Francois Ayer
Draper Laboratory
555 Technology Square, MS-20
Cambridge, MA 02139
(617) 258-3846 FAX (617) 258-2121

Charles Bakis
Penn State University
227 Hammond Bldg.
University Park, PA 16802
(814) 865-3178 FAX (814) 863-7967

David Barnard
The Aerospace Corporation
The Hallmark Building
13873 Park Center Road
Herndon, VA 22071
(703) 709-9749 FAX (703) 318-5409

Marcel Belanger
Abacus Technology Services
5454 Wisconsin Avenue, Suite 1100
Chevy Chase, MD 20879
(301) 215-7584 FAX (301) 907-8508

Donald Bender
Lawrence Livermore National Laboratory
7000 East Avenue
P. O. Box 808, L-471
Livermore, CA 94551
(510) 422-1798 FAX (510) 423-3143

Joe Beno
The University of Texas
Center for Electromechanics
PRC/EME, Bldg. 133 (R7000)
Austin, TX 78712
(512) 471-4496 FAX (512) 471-0781

Helmuth Beutel
Hughes Aircraft
10606, 7th St
Rancho Cucamonga, CA 91730
(909) 483-4005 FAX (909) 483-4031

Brij Bhargava
Ashman Technologies
4596 Sierra Madre Dr.
Santa Barbara, CA 93110
(805) 964-2104 FAX (805) 683-1011

Joel Bloomer
Bloomer & Associates
24743 144th Ave. S.E.
Kent, WA 98042
(206) 630-9422 FAX (206) 630-9422

Michael Bowler
Trinity Flywheel Batteries
10 Lombard St, Suite 410
San Francisco, CA 94111
(415) 362-0643 FAX (415) 362-0196

Martin Burg
Composite Market Reports, Inc.
7670 Opportunity Road, Suite 250
San Diego, CA 92111-2222
(619) 560-1085 FAX (619) 560-0234

Vince Campbell
Oak Ridge National Laboratory
Post Office Box 2009
9204-1, MS-8048
Oak Ridge, TN 37831
(423) 574-5125 FAX (423) 574-8257

Quark Chen
Texas Center for Superconductivity
University of Houston
3201 Cullen Blvd.
Houston, TX 77204
(713) 743-8253 FAX (713) 743-8201

Wei-Kan Chu
Texas Center for Superconductivity
University of Houston
3201 Cullen Blvd.
Houston Science Center, Room 202
Houston, TX 77204-5932
(713) 743-8250 FAX (713) 743-8201

Patrick Clarke
Clarke Associates
244 Sagamore Dr.
Murray Hill, NJ 07974
(908) 508-1400 FAX (908) 508-1414

Gary Colello
SATCON Technology Corporation
161 First St.
Cambridge, MA 02142
(617) 349-0820 FAX (617) 661-3373

Rodger Cooley
Texas Center for Superconductivity
University of Houston
3201 Cullen Blvd.
Houston, TX 77004
(713) 743-8258 FAX (713) 743-8201

John Coyner
American Flywheel Systems
241 Koa Drive
Kodak, TN 37764
(423) 933-1045 FAX (423) 933-1045

Bruce Crum
Allison Transmission
P. O. Box 894, M3A
Indianapolis, IN 46206-0894
(317) 242-7646 FAX (317) 242-2111

Kelly Dagenhart
Oak Ridge National Laboratory
P. O. Box 2009
Bldg. 9108, MS-8088
Oak Ridge, TN 37831-8088
(423) 576-7917 FAX (423) 574-2102

Bob Davis
Honeywell
8321 W. Foothill Dr
Peoria, AZ 85382
(602) 561-3172 FAX (602) 561-3333

Jean-Pierre Drolet
SNC Industrial Technologies
5 Montee Des Arsenaux
Le Gardeur, Quebec
CANADA J5Z 2PA
(514) 582-6268 FAX (514) 581-9771

Michael V. Drumm
Test Devices, Inc.
6 Loring St.
Hudson, MA 01749
(508) 562-6017 FAX (508) 562-7939

Ralph Flanagan
Flywheel Energy Systems, Inc.
190 Stafford Road West
Unit 108
Ottawa, Ontario
Canada K2W 1AZ
(613) 596-0856 FAX (613) 596-6052

James Folk
SL-Montevideo Technology
2002 Black Oak Ave.
Montevideo, MN 56265
(612) 269-6562 FAX (612) 269-7662

Timothy Fox
California State University Northridge
19111 Nordhoff St.
Mechanical Engineering Department
Northridge, CA 91330
(818) 885-2197 FAX (818) 885-2140

Michael Frias
TSP, Inc.
17 Martin Luther King Blvd.
Stuart, FL 34994
(407) 221-1200 FAX (407) 221-0222

David Friedman
TMF
707 State Road
Princeton, NJ 08540
(609) 921-2001 (609) 497-0998

Christopher Gabrys
Penn State University
227 Hammond Bldg.
University Park, PA 16802
(814) 863-8315 FAX (814) 863-7967

J. R. Gaines
Superconductive Components, Inc.
1145 Chesapeake Avenue
Columbus, OH 43212
(614) 486-0261 FAX (614) 486-0912

Michael Gravely
Superconductivity, Inc.
2114 Eagle Drive
Middleton, WI 53562-2250
(608) 828-9111 FAX (608) 831-5793

William Grayer
Rosen Motors
6430 Independence Avenue
Woodland Hills, CA 91367
(818) 704-0070 FAX (818) 704-0390

Daniel Gregoire
Hughes Research Laboratories
3011 Malibu Canyon
RL58
Malibu, CA 90265
(310) 317-5983 FAX (310) 317-5483

Phil Grimado
Bellcore
445 South St., 1C-113B
Morristown, NJ 07962
(201) 829-4933 FAX (201) 829-5886

John Gully
Advance Research Projects Agency
Advanced Systems Technology Office
3701 North Fairfax Drive
Arlington, VA 22203-1714
(703) 696-2348 FAX (703) 696-8401

James Hansen
Oak Ridge National Laboratory
P. O. Box 2009
Bldg. 9204-1, MS-8051
Oak Ridge, TN 37831-8051
(423) 241-2102 FAX (423) 574-0740

M. Kay Harcom
3M Company
3M Center, Bldg. 224-2S-25
St. Paul, MN 55144-1000
(612) 733-9376 FAX (612) 736-4777

Christian Harris
TRW Space & Electronics Group
One Space Park
Bldg. M3, Room 2264A
Redondo Beach, CA 90278
(310) 814-8759 FAX (310) 814-5426

Robin Harvey
Hughes Research Laboratories
3011 Malibu Canyon Road
RL 58
Malibu, CA 90265
(310) 317-5236 FAX (310) 317-5219

Lubomyr Hewko
Hewko & Associates
10393 Whippletree Lane
Clarkston, MI 48348-2061
(810) 625-9230 FAX (810) 625-9230

Bill Hibble
Honeywell Satellite Systems Operation
19019 North 59th Avenue
2Q13
Glendale, AZ 85308-9650
(602) 561-3713 FAX (602) 561-3333

Jeff Hodgson
Mechanical Engineering
University of Tennessee
414 Dougherty
Knoxville, TN 37996-2210
(423) 974-5294 FAX (423) 974-5274

Dave Howell
Oak Ridge National Laboratory
P. O. Box 2009
9204-1, MS 8048
Oak Ridge, TN 37831-8048
(423) 576-8283 FAX (423) 574-8257

Hao Huang
SL-Montevideo Technology, Inc.
2002 Black Oak Ave.
Montevideo, MN 56265
(612) 269-6515 FAX (612) 269-7662

John Hull
Argonne National Laboratory
Bldg. 335, 9700 S. Cass Avenue
Argonne, IL 60439
(708) 252-8580 FAX (708) 252-5568

James Hurley
SATCON Technology Corporation
161 First Street
Cambridge, MA 02142
(617) 349-0848 FAX (617) 661-3373

Adrian Hutchings
International Energy Systems Limited
Chester High Road
Neston
South Wirral L64 3UE
England
011-44-151-353-1449
FAX 011-44-151-353-1450

Co Huynh
Allied Signal
2525 W. 190th Street, T36-2
Torrance, CA 90509
(310) 512-2180 FAX (310) 512-3550

Kaye Johnson
Oak Ridge National Laboratory
P. O. Box 2008, 4500N, MS-6188
Oak Ridge, TN 37831-6188
(423) 576-0846 FAX (423) 576-1583

Ralph Johnston
Delphi Energy & Engine Management Syst.
7601 East 88th Place
Indianapolis, IN 46256
(317) 579-3692 FAX (317) 579-4991

John Juna
ComEd
10 S. Dearborn
Chicago, IL 60603
(312) 394-8332 FAX (312) 394-2919

Kurt Kammerer
San Diego Gas & Electric
P. O. Box 1831, EB 10
San Diego, CA 92112
(619) 696-1891 FAX (619) 696-1898

Pamela Kaste
U.S. Army
Weapons Technology Directorate
Bldg. 390A, AMSRL-WT-P
APG, MD 21005-5066
(410) 278-6172 FAX (410) 278-6094

Richard Kauffman
Master Brokerage
204 Longwood Rd
Banto, ME 21210
(410) 323-0713

Roy Kessenger
Visual Computing Systems
9540 Hwy 150, P. O. Box 250
Greenville, IN 47124
(812) 923-7474 FAX (812) 923-8777

Thomas Kimsey
Bellcore
445 South St., IA-117G
Morristown, NJ 07960
(201) 829-4985 FAX (201) 829-5866

Dennis Kiser
Kiser Consulting
2942 Homestead Lane
Idaho Falls, ID 83404
(208) 523-8067 FAX (208) 523-8247

Gabor Kiss
Bellcore
445 South St.
MCC 1G-136G
Morristown, NJ 07962
(201) 829-4952 FAX (201) 829-5965

John Kramer
Argonne National Laboratory
9700 S. Cass Ave., Bldg. 207
Argonne, IL 60439
(708) 252-4583 FAX (708) 252-3075

Bob Lankston
Honeywell
19019 N. 59th Ave., M/S J15
Glendale, AZ 85308-9650
(602) 561-4224 FAX (602) 561-3683

David Lewis
University of Virginia
Thornton Hall/McCormick Road
317 MEC
Charlottesville, VA 22902
(804) 924-6208 FAX (804) 982-2037

Cheng-Yi Lu
Rocketdyne
6633 Canoga Ave
LB33
Canoga Park, CA 91303
(818) 586-2316 FAX (818) 586-2007

Thomas Luhman
Boeing Defense & Space Group
P. O. Box 3999, M/S 82-32
Seattle, WA 98124-2499
(206) 773-1991 FAX (206) 773-4946

Ki Ma
Texas Center for Superconductivity
University of Houston
3201 Cullen Blvd.
Houston, TX 77204
(713) 743-8254 FAX (713) 743-8201

David Maass
DOW-United Technology
15 Sterling Drive
Wallingford, CT 06492-1843
(203) 949-5046 FAX (203) 949-5009

Colin McCullough
3M
2465 Lexington Avenue South
60-IN-01
Mendtoa Hts., MN 55120
(612) 737-4127 FAX (612) 736-0431

John McKeever
Oak Ridge National Laboratory
P. O. Box 2003
Bldg. K-1220, MS-7280
Oak Ridge, TN 37831-7280
(423) 576-1862 FAX (423) 576-0279

Crawford Meeks
AVCON, Inc.
5210 Lewis Rd, No. 14
Agoura Hills, CA 91301
(818) 865-0250 FAX (818) 865-0206

William Mitchell
Allied Signal
43 William ST., 2/E1
Teterboro, NJ 07608
(201) 393-2967 FAX (201) 393-6570

Dave O'Kain
Oak Ridge National Laboratory
P. O. Box 2009
Bldg. 9108, MS 8088
Oak Ridge, TN 37831-8088
(423) 576-0268 FAX (423) 574-2102

Arthur Okawauchi
Hughes Space & Communication
2000 E. El Segundo Blvd.
E01/D148
El Segundo, CA 90278
(310) 416-2504 FAX (310) 416-1919

Joseph Olbermann
Unique Mobility, Inc.
425 Corporate Circle
Golden, CO 80210
(303) 278-2002 FAX (303) 278-7007

Scott Penfield
Technology Insights
6540 Lusk Boulevard, Suite C-102
San Diego, CA 92121
(619) 455-9500 FAX (619) 452-7831

Glenn Perry
CALSTART, Inc.
3601 Empire Ave.
Burbank, CA 91505
(818) 565-5600 FAX (818) 565-5610

Edward Petrie
ABB
1021 Main Campus Drive
Raleigh, NC 27606
(919) 856-2421 FAX (919) 856-2448

Joe Pinkerton
Magnetic Bearing Technologies
4030 Braker Lane W. Suite 300
Austin, TX 78759
(512) 346-6576 FAX (512) 346-9949

Chris Pionke
Mechanical Engineering
University of Tennessee
310 Perkins
Knoxville, TN 37996
(423) 974-7679 FAX (423) 974-7663

Richard Post
Lawrence Livermore National Laboratory
7000 East Avenue
P. O. Box 808, L-644
Livermore, CA 94551
(510) 422-9853 FAX (510) 423-7914

Stephen Poulos
General Motors Corp.
Research & Development Center
RSB, Bldg. 1-6
30500 Mound Road
Warren, MI 48090-9055
(810) 986-0890 FAX (810) 986-0412

John Price
University of Texas
Center for Electromechanics
PRC/EME, Bldg. 133, R7000
Austin, TX 78712
(512) 471-4496 FAX (512) 471-0781

Lawrence Puckett
U.S. Army Research Laboratory
Bldg. 190, Room 205
Aberdeen Proving Ground, MD 21005-5066
(410) 278-4105 FAX (410) 278-4069

Melissa Reading
Pacific Gas & Electric R&D
2303 Camino Ramon, Suite 200
San Ramon, CA 94583-1356
(510) 866-5750 FAX (510) 866-3176

Gerhard Reiner
Magnet-Motor GmbH
Petersbrunner Str. 2
82349 Starnberg
Germany
011-49-8151-262-133
FAX 011-49-8151-12478

Rex Roehl
Commonwealth Edison
10 S. Dearborn
35 FNE-Technology & Resource Devlp.
Chicago, IL 60603
(312) 394-4367 FAX (312) 394-2919

Roman Rondiak
Albany International Research Co.
777 West Street
Mansfield, MA 02048-9114
(508) 339-7300 FAX (508) 339-4996

Dean Rovang
Sandia National Laboratories
P. O. Box 5800
960/2210 - MS-1193
Albuquerque, NM 87185-1193
(505) 845-8277 FAX (505) 845-7864

Bob Schilling
Oak Ridge National Laboratory
P. O. Box 2009
9108, MS-8088
Oak Ridge, TN 37831-8088
(423) 576-7859 FAX (423) 574-2102

John Shaffer
Oak Ridge National Laboratory
P. O. Box 2009
Bldg. 9204-1, MS-8048
Oak Ridge, TN 37831-8048
(423) 576-1880 FAX (423) 574-8257

Lewis Sibley
World Flywheel Consortium &
Tribology Systems, Inc.
225A Plank Ave.
Paoli, PA 19301-1726
(610) 889-9088 FAX (610) 993-0860

Pierre Simard
Interstar
1021 Rue, Boies
St Bruno, Quebec
Canada J3V 5Z3
(514) 653-3014 FAX (514) 653-3014

Michael Smoot
E. I. Dupont
Rt. 896 GBC Bldg. 200
Newark, DE 19702
(302) 451-3200 FAX (302) 451-4932

Eric Sonnichsen
Test Devices, Inc.
6 Loring St.
Hudson, MA 01749
(508) 562-6017 FAX (508) 562-7939

Edward Stone
World Flywheel Consortium, Inc.
225A Plank Ave.
Paoli, PA 19301-1726
(610) 889-9088 FAX (610) 993-0860

Rogelio Sullivan
U. S. Department of Energy
1000 Independence AVE, SW
EE-J21
Washington, D.C. 20585
(202) 586-8042 FAX (202) 586-1600

Mike Tamor
Ford Motor Co.
SRL, MD 3435
Dearborn, MI 48121-2053
(313) 337-4108 FAX (313) 845-4495

Colin Tarrant
International Energy Systems
Chester High Road
Neson
South Wirral L64 3UE
England
011-44-151-353-1449
FAX 011-44-151-353-1450

Joseph Tecza
Mechanical Technology, Inc.,
968 Albany-Shaker Road
Latham, New York 12110
(518) 785-2355 FAX (518) 785-2420

Brigham Thomas
Oak Ridge National Laboratory
P. O. Box 2009
Bldg. 9204-1, MS 8050
Oak Ridge, TN 37831-8050
(423) 574-8356 FAX (423) 574-0740

Douglas Thorpe
Thortek
P. O. Box 20363
Knoxville, TN 37940-1363
(423) 573-8183 FAX (423) 573-8183

Leonard Topper
Abacus Technology Corp.
2126 Connecticut Ave., N.W.
Washington, D.C. 20008
(202) 234-5984

David Townley
Southern Development
64 Perimeter Center East
Bin 233A
Atlanta, GA 30346
(770) 821-4563 FAX (770) 821-3294

Kenneth Uherka
Argonne National Laboratory
9700 S. Cass Ave.
Energy Technology Div., Bldg. 335
Argonne, IL 60439
(708) 252-7814 FAX (708) 252-5568

Andreas Vlahinos
NREL, Advanced Vehicle Systems
1617 Cole Boulevard
27/215
Golden, CO 80401-3393
(303) 384-7467 FAX (303) 384-7411

James Walton
Mohawk Innovative Technology, Inc.
1059 Belridge Rd
Niskayuna, NY 12309-4717
(518) 877-8720 FAX (518) 372-9547

James W. Wehner
TRW Space & Electronic Group
One Space Park
R5/1211
Redondo Beach, CA 90278
(310) 814-6825 FAX (310) 813-7168

Robert Weissbach
Arizona State University
4506 South Oak Street
Tempe, AZ 85282
(602) 965-6186 FAX (602) 965-0745

Sam Wright
Boeing
P. O. Box 3999
84-09
Seattle, WA 98124-2499
(206) 773-5688 FAX (206) 773-4541

Zule (Harold) Xia
Texas Center for Superconductivity
University of Houston
3201 Cullen Blvd.
Houston, TX 77204
(713) 743-8254 FAX (713) 743-8201

Tetsuya Yamamoto
Mitsubishi Heavy Industries, ltd.
Nagoya Aerospace Systems
10, Oye-Cho, Minato-Ku,
Nagoya, 455 Japan
011-81-052-611-8001 x 5324
FAX 011-81-052-611-1611

Richard Ziegler
Oak Ridge National Laboratory
P. O. Box 2008
Bldg. 4500N, MS 6188
Oak Ridge, TN 37831-6188
(423) 574-5149 FAX (423) 576-1583

WORKSHOP COMMITTEE

Dave O'Kain
Oak Ridge National Laboratory
P. O. Box 2009
Bldg. 9108, MS 8088
Oak Rige, TN 37831-8088
(423) 576-0268 FAX (423) 574-2102

Dave Howell
Oak Ridge National Laboratory
P. O. Box 2009
9204-1, MS 8048
Oak Ridge, TN 37831-8048
(423) 576-8283 FAX (423) 574-8257

SUPPORT STAFF

Pamela Byrd
Oak Ridge National Laboratory
P. O. Box 2009
Bldg. 9204-1, MS 8045
Oak Ridge, TN 37831-8045
(423) 574-5386

Joyce Carmack
Oak Ridge National Laboratory
P. O. Box 2009
Bldg. 9108, MS 8088
Oak Ridge, TN 37831-8088
(423) 576-8498 FAX (423) 574-2102

Norma Cardwell
Lockheed Martin Energy Systems, Inc.
Conference Office
P. O. Box 2008
Jackson Plaza, MS 6483
Oak Ridge, TN 37831-6483
(423) 574-5979

Paula Cox
Lockheed Martin Energy Systems, Inc.
Visitor Center
P. O. Box 2009
Bldg. 9109, MS 8027
Oak Ridge, TN 37831-8027
(423) 241-4487