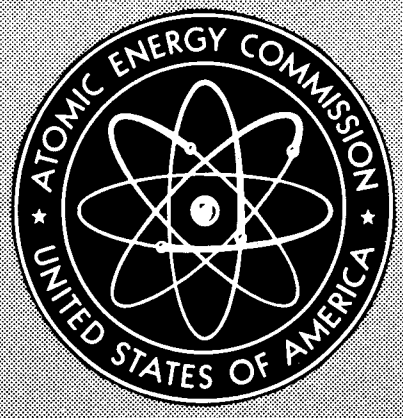

MASTER

PRWRA-GNEC-6

BOILING NUCLEAR SUPERHEATER (BONUS) POWER STATION

Final Summary Design Report

May 1, 1962

General Nuclear Engineering Corporation
Dunedin, Florida

and

Puerto Rico Water Resources Authority
San Juan, Puerto Rico

UNITED STATES ATOMIC ENERGY COMMISSION • DIVISION OF TECHNICAL INFORMATION

DISCLAIMER

This report was prepared as an account of work sponsored by an agency of the United States Government. Neither the United States Government nor any agency Thereof, nor any of their employees, makes any warranty, express or implied, or assumes any legal liability or responsibility for the accuracy, completeness, or usefulness of any information, apparatus, product, or process disclosed, or represents that its use would not infringe privately owned rights. Reference herein to any specific commercial product, process, or service by trade name, trademark, manufacturer, or otherwise does not necessarily constitute or imply its endorsement, recommendation, or favoring by the United States Government or any agency thereof. The views and opinions of authors expressed herein do not necessarily state or reflect those of the United States Government or any agency thereof.

DISCLAIMER

Portions of this document may be illegible in electronic image products. Images are produced from the best available original document.

LEGAL NOTICE

This report was prepared as an account of Government sponsored work. Neither the United States, nor the Commission, nor any person acting on behalf of the Commission:

A. Makes any warranty or representation, expressed or implied, with respect to the accuracy, completeness, or usefulness of the information contained in this report, or that the use of any information, apparatus, method, or process disclosed in this report may not infringe privately owned rights; or

B. Assumes any liabilities with respect to the use of, or for damages resulting from the use of any information, apparatus, method, or process disclosed in this report.

As used in the above, "person acting on behalf of the Commission" includes any employee or contractor of the Commission, or employee of such contractor, to the extent that such employee or contractor of the Commission, or employee of such contractor prepares, disseminates, or provides access to, any information pursuant to his employment or contract with the Commission, or his employment with such contractor.

This report has been reproduced directly from the best available copy.

Printed in USA. Price $8.25. Available from the Office of Technical Services, Department of Commerce, Washington, D. C. 20230

USAEC Division of Technical Information Extension, Oak Ridge, Tennessee

PRWRA-GNEC-6
REACTOR TECHNOLOGY

BOILING NUCLEAR SUPERHEATER (BONUS) POWER STATION

Final Summary Design Report
May 1, 1962

Prepared Under Contract With The
UNITED STATES ATOMIC ENERGY COMMISSION
GNEC/AEC Contract AT(40-1)-2674

PRWRA/AEC Contract AT(40-1)-2672

GENERAL NUCLEAR ENGINEERING CORPORATION
Dunedin, Florida

and

THE PUERTO RICO WATER RESOURCES AUTHORITY
San Juan, Puerto Rico

Table of Contents

100. INTRODUCTION

200. SUMMARY

- 201. General
- 202. Design Parameters
- 203. Reactor Design
- 204. Reactor Physics
- 205. Reactor Auxiliaries
- 206. Power Plant
- 207. Instrumentation and Control
- 208. Containment Building
- 209. Site
- 210. Summary of Design and Performance Data

300. REACTOR

- 301. Reactor Core
- 302. Fuel Assemblies
- 303. Fuel Assembly Locating Devices and Neutron Start-up Source
- 304. Reactor Core Structure
- 305. Control Rods and Poison Shims
- 306. Reactor Pressure Vessel
- 307. Control-Rod Drive System
- 308. Reactor Biological Shield
- 309. Reactor Physics

400. REACTOR AUXILIARY SYSTEMS

- 400.1 General
- 401. Reactor Water Circulation System
- 402. Emergency Cooling System
- 403. Liquid Poison System
- 404. Reactor Water Preheater
- 405. Reactor Water Purification and Shutdown Cooling
- 406. Shield Cooling
- 407. Fuel Handling
- 408. Fuel Pool Cooling and Purification
- 409. Reactor Shield Annulus Ventilation
- 410. Radiolytic and Radioactive Waste Gas Disposal
- 411. Emergency Core Spray
- 412. Fuel-Element Failure Detection System
- 413. Liquid Waste Disposal System
- 414. Solid Waste Handling and Storage System
- 415. Seal Water Supply System

500. POWER PLANT

501. General
502. Turbine-Generator Unit
503. Reactor Pressure Control System
504. Condenser and Auxiliaries
505. Condensate Purification System
506. Feedwater Heaters
507. Reactor Feedwater Pumps
508. Feedwater Regulator System
509. Auxiliary Cooling Water System
510. Makeup Water System
511. Compressed Air Supply

600. ELECTRICAL GENERATION AND DISTRIBUTION

601. Main Power System
602. Emergency Diesel Power Supply
603. Direct-Current Supply

700. STATION CONTROL

701. General
702. Control of Turbine-Generator Unit
703. Reactor Power Control
704. Reactor Interlock and Reactor Shutdown System

800. INSTRUMENTATION

801. General
802. Reactor Nuclear Instrumentation
803. Non-Nuclear Instrumentation

900. CONTAINMENT BUILDING

901. General
902. Shell and Dome Steel Structure
903. Foundation Mat
904. Retainer Wall
905. Building Seals and Penetrations
906. Building Equipment Arrangement and Shield Structures
907. Ventilation and Air Conditioning
908. Sanitary Waste System
909. Building Crane
910. Building Spray System
911. Fire Protection
912. Lighting
913. Communications
914. Painting

1000. ENTRANCE BUILDING

1001. General

1100. SITE SERVICES AND STRUCTURES

1101. General

1200. DESIGN DRAWINGS AND SPECIFICATIONS

1201. Design Drawings
1202. Design Specifications

List of Illustrations

Figure

203-1 Horizontal cross section of core.
203-2 Perspective drawing of enriched boiler fuel assembly.
203-3 Superheater fuel assembly, connector piping, and coupling components.
203-4 Perspective drawing of reactor vessel and internals.
203-5 Vertical cross section of vessel.

208-1 Perspective of containment building.

209-1 Site location map
209-2 Site aerial view looking toward the northwest.
209-3 Site map.

301-1 Horizontal cross section of core.
301-2 Perspective view of reactor vessel and internals.
301-3 Vertical cross section of the reactor vessel.
301-4 Reactor heat balance.
301-5 Horizontal cross section through the reactor pressure vessel, showing the exit piping.
301-6 Boiler axial power, steam void and steam quality distribution.
301-7 Enthalpy and temperature of steam passing through hottest superheater assembly.

302-1 Perspective drawing of enriched boiler fuel assembly.
302-2 Upper and lower enriched fuel-bundle subassembly.
302-3 Boiler fuel outer shell and end-fittings.
302-4 Perspective drawing of a natural or enriched fuel rod.
302-5 Superheater fuel assembly, connector piping, and coupling components.
302-6 Superheater fuel assembly.
302-7 Standpipe subassembly.
302-8 Perspective drawing of superheater fuel assembly.
302-9 Perspective drawing of fuel-rod and coolant-tube subassembly.
302-10 The fuel rod and the coolant tube.
302-11 Shell assembly.
302-12 Detail of coupling component.
302-13 Inlet and outlet connector piping.
302-14 Superheater inlet and outlet nozzle.
302-15 Superheater orifices.
302-16 Superheater orifice positioning.

303-1 Boiler fuel holddown assembly.
303-2 Perspective of the boiler fuel holddown assembly.
303-3 Superheater end wedge in position in core structure.
303-4 Superheater end wedge assembly.
303-5 Startup neutron source.

304-1 Perspective view of reactor core structure.

305-1 Cruciform control rod.
305-2 Slab control rod.
305-3 Boiler shim assembly.
305-4 Boiler shim holder subassembly.
305-5 Boiler-superheater shim assembly.
305-6 Boiler-superheater shim holder.

307-1 Layout of control rod drive system.
307-2 Rod-acutator assembly.
307-3 Drive-motor assembly.
307-4 View of control rod position indicator module mounted in the main control panel.
307-5 Control rod disconnect procedure.
307-6 Elementary wiring diagram for the control rod drive system.

308-1 Material, thickness, and location of the fixed and removable shield structures.
308-2 Field installation of neutron shield tank in reactor biological shield liner.
308-3 Removable shield structures in place above reactor.

309-1 Horizontal cross section of BONUS core showing control rod locations.
309-2 Locations of poison shims and types of fuel assemblies.
309-3 Locations of boron-steel strips on shim holders.
309-4 Movement of boiler and superheater fuel in BONUS core for the four-batch reloading plan used in the equilibrium fuel-cycle operation.
309-5 Comparison of measured and calculated gross axial power distributions in enriched boiler section of hot-simulated BONUS critical assembly for control-rod configuration No. 3 (side-rods banked at 23.17 inches and blade rods banked at 30.00 inches, all other rods full-out).
309-6A Calculated hot-plane power distribution in the hot-simulated BONUS critical assembly (center control rod in).
309-6B Measured hot-plane power distribution in the hot-simulated BONUS critical assembly (center control rod in).
309-7 Radial power distribution in hot plane of BONUS reactor (center control rod in).
309-8 Radial power distribution in hot plane of BONUS reactor (center control rod out).
309-9 Axial power distribution in the enriched-fuel section of the BONUS boiler region for various control rod configurations.
309-10 Measured radial power distribution in hot plane of superheater region (side rods and blade rods at 25 inches; all other rods out).

309-11 Measured axial power distribution in superheater region (corrected for difference in core height between critical mockup and BONUS; side rods and blade rods at 25 inches; all other rods out).
309-12 Xenon transient after power reduction from full-power steady state.
309-13 Net reactivity change in local sections of BONUS boiler due to simultaneous burnup of shims and local fuel for the hot operating condition.
309-14 Calculated reactivity variations versus average exposure of BONUS boiler fuel.
309-15 Distribution of fuel burnup in the hot plane of the BONUS reactor after an average hot-plane burnup of 7,500 Mwd/ton U in the boiler region.
309-16 Power distribution in the hot plane of the BONUS reactor immediately after removal of all boiler shims (center rod out; 7,500 Mwd/ton U average burnup in hot plane of boiler region).
309-17 Boiler region reloading pattern used for power distribution calculation.
309-18 Radial power distribution in the hot plane of the BONUS reactor after reloading the boiler region as indicated in Fig. 309-17 (center control rod out).

400.1-1 Legend — Mechanical.
400.1-2 Legend — Electrical.
400.1-3 Piping schedule.
400.1-4 Reactor auxiliary systems diagram.

401-1 Flow diagram of reactor circulating water, purification, shutdown cooling, and preheating.
401-2 Schematic diagram of electrical control for reactor water-circulation system control valves.
401-3 Schematic diagram of electrical control for reactor water-circulation pumps.
401-4 Schematic diagram of wiring of reactor water-circulation lubricating pumps.
401-5 Reactor circulating water pump performance curves.
401-6 Reactor water-circulation pump.
401-7 Reactor water circulating pump tandem double mechanical shaft seal.

403-1 Schematic diagram of liquid poison injection system piping.
403-2 Schematic wiring diagram of poison injection system valves.

404-1 Schematic electric control diagram for reactor water preheater.
404-2 Schematic electric control diagram for preheater valve MDV-20.

405-1 Schematic electrical control diagram for reactor purification system pumps.
405-2 Schematic electrical control diagram for the regenerative cooler inlet and bypass motor-operated valves.
405-3 Schematic electrical control diagram for the reactor purification system motor-operated return valves.
405-4 Schematic electrical control diagram for the shutdown cooling and preheating motor-operated valve MOV-22.
405-5 Schematic electrical control diagram for the secondary cooler auxiliary cooling water motor-operated valve MOV-15.
405-6 Reactor purification pump performance curves.

406-1 Shield cooling system.
406-2 Reactor shield cooling coil locations.
406-3 Schematic diagram of shield cooling control.

407-1 Fuel coffin and carriage.
407-2 Fuel coffin and carriage circuit diagram.
407-3 Fuel coffin in place over reactor during refueling operations.
407-4 Rotating shield assembly.
407-5 Fuel handling tool.
407-6 Fuel storage racks.

408-1 Flow diagram for fuel pool.
408-2 Schematic diagram of electrical control for fuel pool pumps.

409-1 Schematic wiring diagram of reactor annulus exhausters.

410-1 Schematic diagram of radiolytic and radioactive gas disposal system.
410-2 Schematic electrical control diagram for motor-operated radiolytic gas diversion valves.
410-3 Schematic electrical control diagram for vapor sphere recirculation blower.

411-1 Schematic wiring diagram for core spray valve MOV-4.

413-1 Schematic diagram of liquid waste disposal system.
413-2 Schematic diagram of electrical control of sump pumps.
413-3 Schematic diagram of piping of liquid-waste-transfer system.
413-4 Schematic diagram of electrical control of liquid-waste-transfer pumps.
413-5 Schematic diagram of electrical control of liquid waste evaporator.

414-1 Waste transfer cask.

415-1 Seal water supply system.
415-2 Schematic diagram of electrical control for seal water pump.
415-3 Control schematic for seal water back-up valve FCV-17.

501-1 Main steam and extraction steam flow diagram.
501-2 Heat balance.
501-3 Simplified steam cycle diagram.
501-4 Sampling flow diagram.
501-5 Control schematic MOV-1.

502-1 Schematic electric control diagram of turbine gland seal exhausters.
502-2 Schematic electric control diagram of turbine auxiliary and seal oil pumps.
502-3 Schematic electric control diagram for turbine d-c emergency oil pump.
502-4 Schematic electric control diagram for turbine oil tank vapor extractor and oil filter circulating pump.
502-5 Schematic electric control diagram for turbine turning gear motor.
502-6 Schematic electric control diagram for turbine turning gear remote engagement.
502-7 Schematic electric control diagram for turbine trip valve solenoid and bearing drain enlargement exhauster.
502-8 Schematic electric control diagram turbine trip valve test solenoid.
502-9 Schematic electric control diagram for turbine load limit and governor synchronizing motors.
502-10 Schematic electric control diagram main exciter breaker.
502-11 Schematic electric control diagram generator excitation and voltage regulator.
502-12 Schematic electric control circuit main exciter field rheostat control.
502-13 Schematic electric control diagram generator field ground detector.

503-1 Schematic flow and control diagram for reactor pressure control system.

504-1 Schematic flow diagram condenser sea water circulation system.
504-2 Schematic electric control diagram for condenser circulating water valves.
504-3 Schematic electric control diagram for condenser hogging pump.
504-4 Schematic electric control diagram for condensate pumps.
504-5 Schematic electric control diagram for sea water circulating pump.

504-6 Schematic electric control diagram for sea water circulating pump discharge valves.
504-7 Schematic electric control diagram for travelling screen.
504-8 Schematic electric control diagram for travelling screen wash pump.
504-9 Schematic electric control diagram for salt water pump.
504-10 Schematic electric control diagram for salt water motor operated filter.

505-1 Flow diagram of condensate, condensate purification, and reactor feedwater systems.
505-2 Flow diagram of condensate purification and regeneration system.
505-3 Schematic wiring diagram of condensate purification and regeneration system.
505-4 Single-line diagram of condensate water treatment system.

506-1 Flow diagram of feedwater heater drain and vent piping.
506-2 Perspective drawing of feedwater heaters, showing vent and drain piping.

507-1 Schematic wiring diagram for the reactor feedwater pumps.
507-2 Performance curves for the reactor feedwater pumps.
507-3 Electrical circuitry for reactor feedwater pump auxiliary oil pump.

508-1 Circuit diagram of electrical control of the feedwater control bypass valve (MOV-24).
508-2 Circuit diagram of electrical control of the feedwater stop valve (MOV-2).

509-1 Schematic flow diagram of auxiliary cooling water system.
509-2 Schematic electric control diagram for auxiliary cooling water pumps.

510-1 Flow diagram of demineralized make-up water system.
510-2 Schematic wiring diagram of make-up water system mixed-bed regeneration and annunciation.
510-3 Schematic wiring diagram of make-up water treatment system cation and anion regeneration.
510-4 Schematic flow diagram of make-up water treatment system.
510-5 Schematic electrical control diagram for condensate make-up valve (MOV-23).

511-1 Schematic diagram of piping for the control air supply system.
511-2 Schematic diagram of electrical control for control air compressor.

511-3 Schematic diagram of flow through the towers during reactivation and drying.
511-4 Schematic diagram of electrical control of air dryer control system.
511-5 Schematic piping and compressor control wiring diagram for station service air system.

601-1 Electrical distribution single line diagram.
601-2 Schematic electrical control diagram for generator 38-kv breaker.
601-3 Schematic electrical control diagram for Aguada and Rincon 38-kv breakers.
601-4 Elementary electrical control diagram for generator protective relaying.
601-5 Elementary electrical control diagram for 38-kv bus protective relaying.
601-6 Schematic electrical control diagram for station service transformer overcurrent protective relay.
601-7 440-volt alternating current single-line diagram.
601-8 Schematic electrical control diagram for station service transformer secondary breaker.
601-9 Schematic electrical control diagram for the 440-volt outdoor switchgear breaker.
601-10 Schematic electrical control diagram for 440-volt indoor switchgear breakers.
601-11 Schematic electrical control diagram for 440-volt bus undervoltage protective relay.
601-12 Single-line diagram 120/208 VAC distribution.
601-13 Single-line diagram 440-volt alternating current valve motor center.

602-1 Schematic diagram for emergency diesel time delay starting circuit.

603-1 Battery set elementary wiring diagram.
603-2 125-volt direct current one-line diagram.
603-3 Single line diagram 125 volt direct current valve motor center.

704-1 Block diagram of startup and control-rod withdrawal interlock system.
704-2 Block diagram of reactor safety logic system.

802-1 Instrument Thimble locations.
802-2 Nuclear instrumentation system and operating ranges.
802-3 Block diagram of the source-range channel instrumentation.
802-4 Block diagram of the intermediate-range channel instrumentation.
802-5 Block diagram of micromicroammeter channels 5 and 6.

802-6 Block diagram of power range safety channels 7 and 8.
802-7 Block diagram of galvanometer channels 9 and 10.
802-8 Location of area radiation monitoring system.
802-9 Location of area radiation monitoring system.
802-10 Location of area radiation monitoring stations on reactor floor level (68 ft, 0 in.) and adjacent platforms.
802-11 Fuel-element failure detection system.

803A-1 Local turbine gauge board.
803A-2 Generator-Hydrogen control panel.
803A-3 Generator excitation control panels.

803B-1 Over-all layout of the main control panel.
803B-2 Main control Panel, section A.
803B-3 Main control panel, section B.
803B-4 Main control panel, section C.
803B-5 Main control panel, section D.
803B-6 Main control panel, section E.
803B-7 Main control panel, section F.
803B-8 Main control panel, section G.
803B-9 Main control panel, section H.
803B-10 Main control panel, section I.
803B-11 Main control panel, section J.
803B-12 Main control panel, section K.
803B-13 Main control panel, section L.
803B-14 Main control panel, section M.
803B-15 Main control panel, section N.
803B-16 Pillbox control panel.
803B-17 Superheater auxiliary instrument panel.
803B-18 Reactor feedwater auxiliary instrument panel.
803B-19 Reactor auxiliary instrument panel.
803B-20 Reactor auxiliary systems instrument panel.
803B-21 Single-line electric diagram plant annunciator - sheet 1.
803B-22 Single-line electric diagram plant annunciator - sheet 2.
803B-23 Single-line electric diagram plant annunciator - sheet 3.

901-1 Site construction view looking southwest (October, 1961).
901-2 Site construction view looking northwest (October, 1961).
901-3 Elevation view of containment building.
901-4 Test borings plan.
901-5 Test boring log data - sheet 1 of 3.
901-6 Test boring log data - sheet 2 of 3.
901-7 Test boring log data - sheet 3 of 3.

903-1 Simplified plan of foundation mat.
903-2 Sectional elevation of foundation mat.
903-3 Site construction photograph showing foundation mat in vicinity of reactor.
903-4 Site construction photograph showing placement of reinforcing steel for foundation mat.

904-1 Details of retainer wall and foundation mat.
904-2 Retainer wall manhole details.

905-1 Building electrical penetrations.
905-2 Mechanical and electrical building seal details.
905-3 Vacuum relief valve installation.
905-4 Entrance air lock details.
905-5 Sectional elevation of entrance air lock.
905-6 Schematic wiring diagram for entrance and service air locks.
905-7 Service and emergency air lock door details.
905-8 Sectional elevation of service and emergency air lock.
905-9 Freight door details.

906-1 Equipment location plan - main floor (el. 37 ft, 4 in.).
906-2 Vertical elevation of containment building looking north.
906-3 Vertical elevation of containment building looking west.
906-4 Perspective of containment building.
906-5 Equipment location plan - basement floor (el. 16 ft, 0 in.).
906-6 Containment building basement (el. 16 ft, 0 in.) plan.

907-1 Schematic control circuitry for building ventilation valves.
907-2 Schematic control diagram for building ventilation fans.
907-3 Ventilation system plan below main floor level.
907-4 Ventilation system plan above main floor level.
907-5 Ventilation system details.
907-6 Air conditioning system details.
907-7 Schematic circuit diagram of plant air conditioner units.

908-1 Schematic circuit diagram for plant sanitary sewage pump.

909-1 Polar gantry crane arrangement.
909-2 Schematic wiring diagram of controls for building crane.

910-1 Internal building spray piping system.
910-2 Flow diagram of building spray systems.
910-3 Schematic electric circuitry for building spray valve.

911-1 Fire protection system details - sheet 1.
911-2 Fire protection system details - sheet 2.
911-3 Fire protection system details - sheet 3.

912-1 Lighting layout elevation 16 ft.
912-2 Lighting layout elevation 37 ft, 4 in.

913-1 Location of communication and paging systems basement floor level.
913-2 Location of communication and paging systems turbine floor level and above.

1001-1 Layout of entrance building.

1101-1 Site plan.
1101-2 Schematic flow diagram of water make-up, storage and fire protection systems.
1101-3 Schematic electric control diagram for deep well pump.
1101-4 Schematic electric control diagram for raw water booster pumps.
1101-5 Schematic electric control diagram for Zeolite water pumps.
1101-6 Schematic electric control diagram for cooling tower fan.
1101-7 Schematic electric control diagram for cooling tower water chemical feed pump.

100. INTRODUCTION

100. INTRODUCTION

Design and construction of the Boiling Nuclear Superheater (BONUS) Power Station have reached a stage such that a design report can be issued which describes the plant essentially as it will be when completed. Any major changes which occur between now and the completion of construction will be taken care of by issuing revised pages for substitution in the present document. In the meantime, this "Final Summary Design Report" will serve as a source of information for personnel engaged in management, evaluation, or training functions. It is expected to be especially useful in the forthcoming training program for personnel who will be responsible for startup and operation of the BONUS plant.

The BONUS plant is a joint undertaking of the United States Atomic Energy Commission (AEC) and the Puerto Rico Water Resources Authority (PRWRA). The AEC is responsible for design and construction of the reactor and the related auxiliary nuclear facilities. The PRWRA is responsible for the plant site and for design and construction of the power generating portion of the plant. The respective responsibilities of the AEC and the PRWRA are delineated in Contract AT-(40-1)-2672.

The design of the AEC portion of the BONUS plant is being carried out by the General Nuclear Engineering Corporation (GNEC) under AEC Contract AT-(40-1)-2674. This contract also covers a research and development program on the reactor and the containment building. Jackson & Moreland, Inc. of Boston, Massachusetts, was engaged by GNEC, under a subcontract, as architect-engineer to assist in the design and the preparation of specifications. Construction of the AEC portion of the BONUS plant is under the over-all direction of the Maxon Construction Company, Inc., Dayton, Ohio.

The Punta Higüera site for the BONUS plant was furnished by the PRWRA. The design and construction of the generating portion of the plant, the site facilities, and the transmission facilities are being handled by the PRWRA organization.

Design of the BONUS plant is essentially complete, and construction is approximately 50 per cent finished. Construction of the plant is expected to be completed during the latter part of 1962, and full power operation is scheduled to begin February 1, 1963.

This "Final Summary Design Report" describes the entire Boiling Nuclear Superheater (BONUS) Power Station to the extent that this can be done in a single volume of reasonable size. Descriptive matter, illustrations, and compilations of data have been selected from a much larger volume of material to show the essential features of the plant and to provide an understanding of the principles of operation. It will, of course, be necessary for operating and maintenance

personnel to refer, from time to time, to more detailed sources of information such as the complete sets of design drawings and specifications, vendors' data, engineering analyses, hazards analyses, safety procedures, operating procedures, maintenance procedures, etc. These detailed sources of information will be available in a limited number of copies at the plant site.

Certain of the illustrations and drawings in this report have been reproduced from drawings which were used for construction and fabrication of BONUS facilities. This has been done in lieu of preparing special illustrations for report purposes. It should be noted that the title blocks, drawing numbers, notes, legends, and in certain instances, other portions of the actual construction drawings or shop drawings were omitted in order to obtain clarity in reproduction. Also, certain of these reproduced drawings contain references to other construction or shop drawings that are not a part of this report.

The preparation of this report was divided approximately in accordance with responsibilities for design, with GNEC describing the nuclear portion and the PRWRA describing the generating part of the plant. Over-all coordination of the report was the responsibility of GNEC.

200. SUMMARY

201. GENERAL

The Boiling Nuclear Superheater (BONUS) Power Station is under construction at Punta Higuera on the seacoast at the westernmost tip of Puerto Rico. This is a completely integrated nuclear superheat plant of 17.5 Mw(e) output. As such, it represents a prototype which will provide information needed to assess the technological and economic characteristics of this advanced type of nuclear power plant. The BONUS plant is, therefore, a very vital part of the U. S. government's power reactor development program.

The superheating of steam produced in boiling reactors is considered by many reactor designers to be the next major step toward the achievement of a competitive status for nuclear power plants relative to fossil-fueled plants. The history of development of fossil-fueled plants provides ample evidence of the economic incentives for superheating steam. The fact that the cost of electricity has not increased, even though coal and oil have become much more expensive, is directly attributable to progressively better steam conditions, plus the capital and operating cost advantages resulting from building power plants of larger size.

The attractiveness of superheat stems from the fact that incremental energy added to steam in the form of superheat is converted to electricity with an efficiency of 50-60 percent, whereas the heat added in producing saturated steam is utilized at an efficiency of only about 30 percent. Thus, even though a superheater reactor is inherently more complicated and the fuel is likely to always be more expensive than in a boiling reactor, it is not unreasonable to hope that the improved cycle efficiency will more than offset these added costs.

The ability of the BONUS reactor to achieve specified short-term design objectives seems assured. However, in view of the lack of prior experience with reactors of this kind, the length of time the initial superheater fuel elements will be able to maintain their integrity in the corrosive, high temperature steam environment must be regarded as highly speculative. Extensive changes in materials and/or design may be necessary before a satisfactory fuel lifetime is achieved. It must also be demonstrated that radioactive contamination of the turbine does not become a serious problem as a result of radioactivation of impurities in the reactor, corrosion-erosion of radioactive structural materials in the core, or fission products from fuel element cladding defects. The radioactivity problem could be serious because the superheating section does not benefit from a large decontamination factor such as that which results from the distillation process in the boiling section. Statistically significant answers to questions such as these can be obtained from the operating experience on the BONUS plant. A logical decision can then be made as to whether construction of similar plants of much larger size to achieve lower unit costs for electricity is justified.

202. DESIGN PARAMETERS

The many forms which a boiling-nuclear superheater power station can take fall into several broad classes, some of which will be discussed briefly.

The superheating of steam produced in a boiling reactor can either be done in the same reactor which produced the steam or in a separate reactor. These two basic types of nuclear superheaters are commonly referred to as the "integral" and "non-integral" types, respectively. The non-integral type is inherently simpler than the integral type. The absence of nuclear coupling between the boiling and superheating reactors allows each reactor to be controlled independently of the other. This makes power level control, temperature control, and safety problems easier to solve. Each reactor can also be designed for its own particular function (boiling or superheating) with fewer compromises required to make it compatible with the other reactor.

An inherent disadvantage of non-integral boiler-superheater reactor power plants of modest electric output is the fact that the superheating reactor must be too small to be economic. This is particularly true of the graphite or D_2O-moderated, tube-type reactors which are at their economic best in very large sizes (1000 megawatts or more of heat). Until the technology and the economic attractiveness of this type of reactor have been well demonstrated, it is unlikely that financial support could be found for a plant large enough to justify selection of a non-integral type of plant. It should be noted that the economic superiority of large non-integral boiling-superheater stations is merely a possibility, not a certainty.

Although integral boiling-superheater reactors are more complicated in many respects, there is a very high probability that the technological problems associated with this type of reactor can be mastered, particularly by their operation. Most of the major technological problems of non-integral superheater reactors, plus some additional ones, exist in integral boiling-superheater reactors. It follows, therefore, that once successful operation of the BONUS plant has been demonstrated, the large capital outlay required for a large plant of either the non-integral boiling-superheater or the integral boiling-superheater types can be more easily justified.

In view of the limited experience with other types and the lack of evidence that any other type would be economically superior for electric outputs up to 200 Mw(e) or more, it seems clear that the initial effort should be on integral boiling-superheater reactors of the pressure-vessel type which utilize H_2O as moderator and coolant. In the distant future, pressure-tube reactors of the integral boiling-superheater type or those designed as separate superheaters for use in series with a boiling reactor may be adopted for very large nuclear power plants.

However, there will probably always be a justification for plants of more modest size which utilize integral boiling-superheater reactors of the pressure-vessel type.

The power output of the BONUS plant was chosen so that the information needed on feasibility and operational problems could be obtained at minimum cost. It is important to note that practically all of the outstanding questions regarding the feasibility of nuclear superheat can be determined as well with a small plant as with a large one. Furthermore, a small plant can be operated experimentally over short periods as a part of a utility network, whereas a large station must be operated steadily at full power if severe economic penalties are to be avoided.

The most serious questions about the feasibility and economic attractivenss of integral boiling-superheater reactors pertain to the nuclear superheater itself. Fuel elements, thin-walled fuel cladding, and liners of steam flow channels must operate with integrity in the high-temperature steam environment over a period of time long enough to achieve acceptable fuel cycle costs. It must also be verified that carryover of radioactive corrosion products to the turbine does not become excessive. In this regard, it should be noted that the superheating section of a reactor does not benefit from a large decontamination factor such as that which results from the distillation process in a boiling reactor. The meager experimental evidence available on the transport of corrosion products from stainless steel tubes indicates that the amount of radioactivity reaching the turbine in this manner will be tolerable. However, verification is needed on a statistically significant number of specimens operating in a realistic reactor environment in order to provide the level of confidence needed to justify construction of a large nuclear superheater.

The gross electric output of 17.5 megawatts from the BONUS station is large enough to provide reliable answers to questions pertaining to integral boiling-superheater reactors yet small enough to keep costs within reasonable limits. Quite reliable answers will be obtained on fuel integrity and radioactivity carryover problems associated with a reactor which utilizes high-temperature oxygenated steam as a coolant. These results will be directly applicable to very large nuclear superheaters, also.

In order to use a turbine of standard design, turbine throttle steam conditions of 850 psig and 900°F were chosen for the BONUS station. When pressure losses in the superheater fuel assemblies and associated steam piping are taken into account, the reactor will operate at 950 psig or slightly higher. Larger plants of this type built in the future are expected to operate at much higher pressure and at temperatures up to perhaps 1050°F. The long-term integrity of the nuclear superheater will be strongly dependent upon the temperature but largely independent of the pressure. The BONUS reactor has, therefore, been designed so that certain superheater fuel assemblies can be operated at higher temperatures, if desired, to obtain the results needed for future large high-temperature nuclear superheaters. The flexibility of the BONUS design is such that

this reactor can be extremely useful in providing data under a variety of operating conditions.

The value of the BONUS reactor as a developmental machine should not be confused with in-pile capsule and loop experiments for screening fuel and structural materials and components. The BONUS reactor will provide data on a sufficiently large number of specimens to provide statistically significant conclusions. At best, in-pile experiments can do little more than eliminate the types of fuels and materials which are definitely not acceptable. Failure of a sample exposed under realistic test loop conditions normally means that the component tested would not be satisfactory for use in a reactor. Satisfactory operation of a very great number of samples would be required before a conclusion could be drawn that the failure rate in a reactor would be acceptably low. In this regard, it is significant that the superheater region of the BONUS core uses fuel elements which have a total length of almost one mile.

Slightly enriched UO_2 has been selected as the fuel material for both the boiler and superheater regions of the BONUS reactor. Although highly enriched uranium would be advantageous from the standpoint of feasibility of providing more heat transfer surface per unit volume of core, fuel elements utilizing highly enriched UO_2 which is dispersed in metallic matrices were eliminated because of doubts about attaining the fuel burnup required for acceptable superheater fuel cycle costs.

At the high temperatures which prevail in a nuclear superheater, a blistering of typical highly enriched UO_2, stainless steel matrix, fuel elements is expected to occur when more than 20 per cent of the U^{235} has been consumed. The necessity of chemical processing and refabrication of the fuel after such a small burnup entails costs which could offset the increased steam cycle efficiency resulting from the superheating. In water-cooled (boiling or pressurized water) reactors, highly enriched UO_2, stainless steel fuel elements can be operated to more acceptable burnups because of the much lower temperature.

Zircaloy-2 cladding is used on fuel elements in the boiler region of the BONUS core but cannot be used in the superheater region because of its lack of adequate corrosion resistance in high temperature steam. Rod-type UO_2 fuel elements, clad in AISI Type 348 stainless steel, are used in superheater fuel assemblies. Similar elements are under development for use in gas-cooled reactors, and the BONUS project has made use of developmental results, as they are reported. Although the limited data now available indicate that an element of the type adopted for BONUS should be satisfactory, the amount of burnup which can be achieved and the degree of long-term contamination of the turbine, due to transport of stainless steel corrosion products, of water impurities, and of fission products from fuel element failures, remain as questions which can best be answered by actual operation of BONUS. Because of the small amount of fuel involved, the economic penalty would not be prohibitive if it should be necessary to remove the first superheater

fuel charge before it reached its burnup goal. Evaluation of promising fuel designs in the BONUS reactor is definitely less costly than the in-pile loop experiments which would otherwise be necessary to verify the integrity of a given fuel design prior to building a reactor. The statistical and technological significance of the results obtained in BONUS should also be immeasurably greater.

The BONUS reactor design is such that the reactor can be converted to a straight boiling water reactor. An oil-fired superheater could be added simultaneously to obtain a plant, of the same (or greater) electric output, having steam conditions identical with the original BONUS station. In view of the inherent potential of the boiling nuclear superheater type, a decision to make this conversion is very unlikely. The only circumstances foreseen which could warrant such a decision would be unfavorable long-term results on fuel element exposure or radioactivity problems. The economic attractiveness of a nuclear boiler—oil-fired superheater combination is already recognized. Thus even in the very unlikely event that operational experience with nuclear superheaters should prove less than satisfactory, the AEC and PRWRA can be assured of continued operation of the BONUS Power Station in a modified form which is, in itself, a very attractive type of nuclear power plant.

Since the stainless steel used for cladding and structural purposes in the superheater fuel assemblies has a high neutron cross section, it was decided to locate the superheater region at the radial periphery of the core where the adverse effect on neutron economy would be minimized. Equally important reasons for locating the superheater zone at the periphery of the core pertain to heat transfer, transient reactivity, and mechanical considerations. Since steam, like other gases, is fundamentally a poor heat transfer medium, it is logical to use steam as coolant near the outside of the core where the power density is naturally low. In this way, the average power density of the core can be kept high while the power density in the superheater region is kept compatible with the heat transfer properties of the steam coolant and the slightly enriched UO_2 fuel. Reactivity effects, associated with filling the superheater steam coolant passages with water, are also minimized by locating the superheater in a region of low statistical weight. This is important from the standpoints of reactor control and safety. The degree of flexibility for experimental purposes now incorporated in the BONUS design is mechanically feasible only when the superheater is located at the outside of the core. The number of feasible variations in fuel element and fuel assembly designs is thereby increased.

The superheater region of the BONUS reactor consists of thirty-two individual fuel assemblies, each completely integral and separately removable. To remove a fuel assembly, two couplings (one for inlet steam and one for outlet steam) must be disconnected. These couplings are located in the upper part of the pressure vessel where the radioactivity level is low and where the couplings are readily accessible.

This type of design is more reliable than other versions which employ underwater seals and connectors near the reactor core.

Safety and reliability of operation have been of paramount importance in the selection of design features for the BONUS reactor. Removal of heat in the event of loss of steam coolant flow is a problem common to all nuclear superheaters. This has been handled in BONUS by designing the station in such a way that an adequate flow of steam is guaranteed for a long period of time and, also, by designing fuel elements which can dissipate their fission product decay heat by radiation and conduction to the surrounding moderator even if steam flow stopped completely two minutes or more after a reactor shutdown.

The use of a high feedwater temperature to achieve high steam cycle efficiency necessitates the use of forced-circulation cooling of the boiling portion of the reactor core. Unlike some other boiling water reactors in which the condensate is returned to the reactor at a low temperature (e.g., the EBWR), or additional subcooling of the recirculating water is provided in heat exchangers (e.g., the Dresden Station), the BONUS reactor has relatively little subcooling, and boiling occurs throughout most of the BONUS core. Therefore, to keep steam bubble population within reasonable limits, a higher velocity of water through the core is required than could be reliably provided by natural circulation.

Essentially the entire BONUS station is housed within a single gastight building consisting of a steel shell and dome structure anchored and sealed to a gastight concrete slab. There is, therefore, no dependence on valves in steam and water lines leading to the turbine to prevent escape of radioactivity from the reactor in case of an accident. The containment building is large enough (166 ft, 8 in. diameter) to limit the maximum pressure resulting from the worst credible accident to less than 4.3 psig. The low pressure, together with the reduced number of building penetrations for electric cables and mechanical lines, makes the sealing of such a building relatively easy compared with the high-pressure containment buildings used to house other power reactors. The danger of serious injury to personnel within the building at the time of accidental rupture of the primary circuit is also largely removed because of the lower pressure and temperature of the steam-air mixture which would result from such an accident.

The Punta Higüera site is well suited for a nuclear power station. The site is at the westernmost tip of Puerto Rico and is characterized by winds which blow a high percentage of the time out to the sea. The boundary of the site extends a minimum distance of 0.3 miles from the reactor; only 2044 people live within a 2-mile radius. The public is excluded from the site. Earthquake conditions in the site area are less severe than at sites where reactors have already been built along the west coast of the continental United States. Hurricanes are infrequent, but the possibility of high-velocity hurricane winds is taken into account in the design of plant structures.

The more important design features of the BONUS Power Station are summarized in sections 203 through 209 which follow. Emphasis will be given to those features which are peculiar to a superheater reactor; the number of such unique features is rather small. A tabulation of important power station parameters appears in section 210 and for explanation of these parameters the reader is referred to the main body of this report.

203. REACTOR DESIGN

The BONUS reactor is designed to deliver 152,000 lb/hr of steam to the turbine throttle at 850 psig and 900°F. The reactor operates at a nominal pressure of 950 psig, and produces a total of 50 megawatts of heat with feedwater returned at 354°F. Of the 50-Mw total heat output, 37 Mw are generated in a central boiler region, and 13 Mw are generated in a superheater region which is located at the radial periphery of the core. The gross electric output is 17.5 Mw, corresponding to a gross plant efficiency of 35.0 per cent. The net electric output is approximately 16.5 Mw.

A horizontal cross section of the BONUS reactor is shown in Fig. 203-1. The central region of the core, in which the feedwater is raised to its boiling point and where the production of 950-psig saturated steam takes place, contains 64 fuel assemblies in a square array. The superheater region consists of 32 integral steam-cooled fuel assemblies arranged in four separate but identical rectangular sections, one section being located on each side of the square boiler region. The boiler region is 35.4 in. square. The entire core is 55 in. across the flats of the superheater region. The active height of both the boiler and superheater regions is 54-5/8 in. The total area of the core is equivalent to a circle which has a diameter of about 56 in.. The core is centered in a pressure vessel which has an inside diameter of 7 ft.

The BONUS reactor is controlled by 17 boron-stainless steel rods. The nine control rods located in the boiler region are 1/8-in.-thick cruciforms which have a 7-3/4-in. span. The rods located in the boundary between the boiler and superheater regions are 1/8-in.-thick slabs, 14-1/4 in. wide. All rods are guided between fuel assemblies by means of channels in the stainless-steel superstructure above the core. Drives for the rods are of the rack and pinion type and are mounted above the torospherical head of the reactor pressure vessel. Rods are decoupled from the drive shafts before the pressure vessel flanged head is removed from the reactor for the purpose of refueling.

Each of the two sections of a boiling-water fuel assembly contains 32 fuel rods as shown in Fig. 203-2. Each fuel rod is made up of sintered UO_2 compacts, 0.445 in. in diameter, which are contained in a Zircaloy tube having inside and outside diameters of 0.450 in. and 0.500 in., respectively. Thirty-two fuel rods, which have lengths equal to one-half the active length of the core, are fastened at their ends to Zircaloy-2 grid plates which maintain the desired spacing and which provide structural strength. Two such sub-assemblies are then placed end-to-end in a Zircaloy-2 box to form a complete fuel assembly. The two grids at the center of each assembly and the grids at the ends of the assembly are welded to the Zircaloy-2 box. Guide pins in the ends of individual fuel rods pass through holes in the top and bottom grid plates but are not fastened to these grids.

The Zircaloy-2 fuel assembly box is riveted to stainless-steel end-fittings which allow the fuel assembly to be accurately positioned in the core support plate below the core and the stainless-steel egg-crate superstructure above the core. The superstructure is made of Type 304 stainless-steel sheet which is bent to form sixteen cells, each cell containing four boiling-water fuel assemblies. The control rods move vertically in the water channels between adjacent cells.

Each superheater fuel assembly consists of 32 fuel rods, as shown in Fig. 203-3. Sintered UO_2 compacts having a diameter of 0.500 in. are contained in stainless-steel (Type 348) tubes which have a wall thickness of 0.018 in. This cladding is collapsed onto the UO_2 compacts by a stretch-forming process during fabrication to avoid uncontrolled collapsing under operating conditions. Each fuel rod is surrounded by a thin stainless-steel tube which defines the annular path through which steam flows in cooling the fuel. This tube, together with another thin stainless-steel tube surrounding it, provides a static steam gap which serves as an insulator to prevent excessive transfer of heat from the superheated steam to the water which fills the space between adjacent elements. This water is essential as a neutron moderator and as a heat sink for dissipation of heat from the superheater fuel elements when the reactor is shut down.

For shielding purposes, the annular coolant passages which surround individual fuel rods in the superheater zone are normally filled with water when the reactor is shut down. Nuclear calculations indicate that removal of all of this water at low temperatures could increase reactivity by as much as .64 per cent k_{eff}. To avoid any possibility of sudden ejection of this water by steam formation, with a consequent addition of reactivity, an electric preheater is used to raise the temperature of the water before the reactor can be made critical. At operating temperature, the effect of ejecting the water slightly negative. The effect of formation of steam within the boiler region is always negative; this provides an automatic limit to any power rise which might conceivably be caused by ejection of water from superheater coolant channels.

The boiler zone of the core contains 2.81 tons of uranium in the form of UO_2. The four fuel assemblies in the center of the core contain natural uranium; the other sixty assemblies are enriched to 2.40 per cent U^{235}. The four natural assemblies help to flatten the radial power distribution, initially, while holding down some of the initial excess reactivity. As irradiation progresses and more reactivity is needed, the natural assemblies are removed. Thereafter, radial flattening is maintained by radial shuffling of the fuel assemblies; i.e., fresh fuel of the proper enrichment is added to the periphery of the boiler zone as spent fuel is withdrawn from the center. Boron-stainless shims located in the central hole of the boiler assemblies provide additional flexibility in power flattening and reactivity control.

Fuel in the boiler region operates at an average specific power of 13.2 Mw/ton U. The anticipated average exposure of 10,000 Mwd/ton U will be reached in 2.6 years at a plant factor of 0.80.

The calculated maximum local UO_2 temperature in the boiler region of the core is designed for a calculated maximum local temperature of 4300°F which is at least 700°F below the melting temperature. The minimum value of burnout heat flux is at least a factor of two greater than the maximum calculated heat flux. The maximum exit void fraction of 0.42 is well below what is considered to be the limit for natural-circulation reactors. For forced-circulation reactors, such as the BONUS reactor, the limit on exit void fraction is expected to be higher than for natural-circulation reactors.

The thirty-two fuel assemblies in the superheater region of the BONUS core contain 1.79 tons of uranium in the form of UO_2, enriched to 3.25% U^{235}. With this enrichment, the reactivity and the power output of the superheater region would be too high at the beginning of operation if they were not held down by boron-stainless neutron absorbing shims and control rods. Shims with varying neutron absorbing strength are installed to provide optimum power flattening and reactivity control. These shims will also provide additional control over the power sharing between boiler and superheater over the reactor lifetime. Superheater fuel assemblies can also be rotated 180° to gain reactivity and to achieve more uniform burnup.

The specific power of the superheater region is limited by UO_2 centerline and fuel cladding surface temperature design limits of 4500°F and 1250°F, respectively. Actually, according to design calculations, neither of these limits is reached in the superheater; the maximum calculated values being 3100°F and 1171°F, respectively. The apparent margins before the design limits are reached, the pessimistic nature of the calculations themselves and the conservative values chosen for these temperature limits contribute to the hope that it will prove to be possible to ultimately increase the specific power of superheater fuel substantially above the initial BONUS design values. This might lessen concern over the rather long exposure (4.7 years) required to reach an average burnup of 10,000 Mwd/ton U at the initial average specific power of 7.25 Mw/ton.

By studying Fig. 203-4 and Fig. 203-5, which show vertical sections through the reactor, an understanding can be gained of the manner in which the boiler and superheater zones operate. Water is circulated through the boiler portion of the reactor core at a rate of 9,000 gal/min by means of two forced-circulation pumps. Before being withdrawn from the reactor vessel, this recirculating water is mixed with 354°F feedwater which is injected into the lower part of the pressure vessel through a sparging ring. The slightly subcooled water (8°F below boiling temperature) passes from the pressure vessel through two 12-in.-dia. pipes to the pumps which are located in a room beneath the reactor. Discharge pipes from the two pumps merge into a single 16-in.-dia. pipe which leads back to the reactor.

The amount of coolant that flows from the plenum at the bottom of the pressure vessel to each fuel assembly is determined by removable orifices in the core support plate; these orifices distribute the flow in proportion to the expected power output. A small amount of water is also circulated through the moderator spaces between fuel elements in the boiler and superheater zones in order to sweep small quantities of steam from these areas. The slightly subcooled water is heated as it rises through the boiler assemblies and reaches its boiling point after traversing about 20 per cent of the height of the core. Thereafter, steam bubbles begin to accumulate progressively until these bubbles occupy 42 per cent (on the average) of the coolant channel area as the steam-water mixture emerges from the top of the fuel assemblies. This corresponds to a steam weight fraction (quality) of 0.044 at the channel exit at the top of the core.

The steam-water mixture emerging from the top of the core continues upward through the cells of the stainless-steel superstructure. In the region above the superstructure, gravitational separation of water from the steam takes place. The steam then passes into the steam dryer/preheater prior to entry into the superheater inlet pipes, and the water passes downward through the annular downcomer between the reactor core and the reactor pressure vessel to the forced-circulation outlet pipes.

As a result of the rather large area available for gravitational separation, it is expected that steam in the upper part of the reactor vessel will contain less than 1 per cent moisture. Before entering pipes which lead to the superheater fuel assemblies, this steam is passed through conventional corrugated plate dryers which will reduce the moisture content to less than 0.1 per cent. After mechanical separation the steam is passed through a heat exchanger (with 900°F outlet steam as the heat source), to remove by evaporation the last traces of moisture and to provide a few degrees of superheat to the steam entering the fuel elements. This precaution will reduce the deposition of solids on the fuel element surfaces and alleviate concern over possible adverse effects of this deposition such as stress corrosion due to chloride buildup.

The superheater coolant inlet pipes are connected to the dryer-preheater plenums by 2-bolt clamp-type couplings utilizing stainless-steel O-ring gaskets. Steam enters the inlet standpipe which extends upward from the core to the upper region of the pressure vessel for ease in making and breaking the connections required for fuel handling. Each pipe contains a stainless-steel spiral plug to reduce streaming of radiation to the upper vessel region. After passing down the inlet pipe, the preheated steam enters a plenum box in the top of the superheater assembly. This plenum box directs the steam to the two rows (eight individual elements) of fuel elements adjacent to the boiler zone of the reactor. Passage of steam downward through these eight parallel-flow elements constitutes the first pass of the four-pass cooling system. The plenum at the bottom of the fuel assembly receives

slightly superheated steam from the first pass, and directs it upward through the next eight elements which constitute the second pass. In the top plenum, the cross-over in the plenum directs the steam downward through the third group of eight elements. Finally, the bottom plenum directs the steam upward through the outermost eight elements to complete the four passes. The steam then flows through the exhaust pipe to a collection header in the steam dome near the top of the pressure vessel.

The connection from the superheater outlet pipe to the collection header is identical except for the bellows with that between inlet pipe and inlet header. The seals must be good enough to prevent any substantial amount of inleakage of saturated steam into the superheated steam in spite of the approximately 80-psi pressure differential existing with the highest duty assemblies. The connector design was developed through the BONUS R&D program and was selected from the standpoint of reliability and ease of manipulation.

The total steam flow to the superheater zone is 152,000 lb/hr. This corresponds to an average inlet velocity of 71 ft/sec at the beginning of the first pass of the superheater assemblies. The outlet from each fuel assembly is orificed to make the amount of steam flowing through that assembly proportional to the expected heat output.

The steam leaving the 32 superheater assemblies is collected in eleven separate pipes leading to the outside of the reactor shield where temperature and flow are performed. Seven of the pipes collect steam from seven identical groups of four superheater assemblies. The other four pipes collect steam from individual superheater assemblies in the remaining group of four assemblies. In this way, the performance of the four individual elements in one typical group can be monitored, and the performance of the individual elements in the other seven groups can be closely estimated by comparing the temperature of the steam leaving these groups with the mixed mean temperature of steam leaving the four assemblies that are monitored individually.

The ability to monitor the flow and temperature of the steam from eleven different outlet pipes is particularly important from the standpoint of safety as well as from the standpoint of obtaining the maximum information on the performance of the superheater fuel. Changes in power distribution can be readily detected, and adjustments can be made in the control-rod and shim patterns to give the desired power distribution. Corrosion and radioactivity carryover can be measured on samples of steam from each of the outlet pipes to obtain correlations with steam temperature, velocity, etc. The approximate location of superheater fuel-element failures can be determined without shutting down the reactor.

The reactor core is centered horizontally in a 7-ft-ID carbon-steel pressure vessel that has a 3.125-in.-thick wall, clad internally with

a weld overlay of 0.25 in. of stainless steel. The pressure vessel is designed for a pressure of 1150 psig and a temperature of 600°F, but it will operate at a nominal pressure of 950 psig and a temperature of 540°F. The over-all inside height of the vessel is 26 ft, 7 in.; its total weight, including heads and nozzles, is 61 tons.

The portion of the pressure vessel adjacent to the reactor core is protected against excessive thermal stress and radiation damage by a 1-in.-thick stainless-steel thermal shield. This shield is cooled by natural circulation of water.

Outside the reactor pressure vessel, the steel neutron shield tank serves as a support for the pressure vessel and contain steel and water for neutron shielding. In a radial direction, this external thermal shield is followed by a thick biological shield made of ordinary concrete. For the areas above and below the reactor vessel, special shields consisting of lead, concrete, and/or water are used. The shielding above the pressure vessel is removable for access to the control-rod drive mechanisms and to the bolts on the top head itself.

A fuel-handling system consisting of a rotatable shield plug, a movable lead-shielded coffin, and auxiliary handling tools, permits the removing or shifting of irradiated fuel assemblies of either the boiler or superheater type from the reactor one at a time to transfer them to a water-filled fuel storage well which is located adjacent to the reactor. Ultimate shipment of irradiated fuel to a chemical processing plant will be by means of a special shipping cask which will be loaded with fuel assemblies while submerged in the fuel storage well.

The BONUS reactor is so designed that it can be converted to an all-boiling reactor. Thus, after a period of operation during which answers to the outstanding questions pertaining to nuclear superheat are obtained, the BONUS Station could be converted to a boiling reactor — oil fired superheater plant, if desired. This conversion would be made only in the unlikely event that long-term operation as a nuclear superheater proved to be unsatisfactory or uneconomical.

To accomplish the conversion, the superheater fuel assemblies and their lower support grids would be removed from the reactor. Twenty-four additional boiler fuel assemblies would then be added in the former superheater region, making a total of 88 assemblies in the all-boiling core. An oil-fired superheater would have to be installed outside the containment building and connected in the main steam line from the reactor to the turbine. The boiling water reactor would produce 38.6 Mw of heat; the superheater would add 11.4 Mw of heat to the steam. Turbine throttle steam conditions would be the same as before namely 850 psig and 900°F. The gross electric output of the converted plant would remain at 17.5 mw(e).

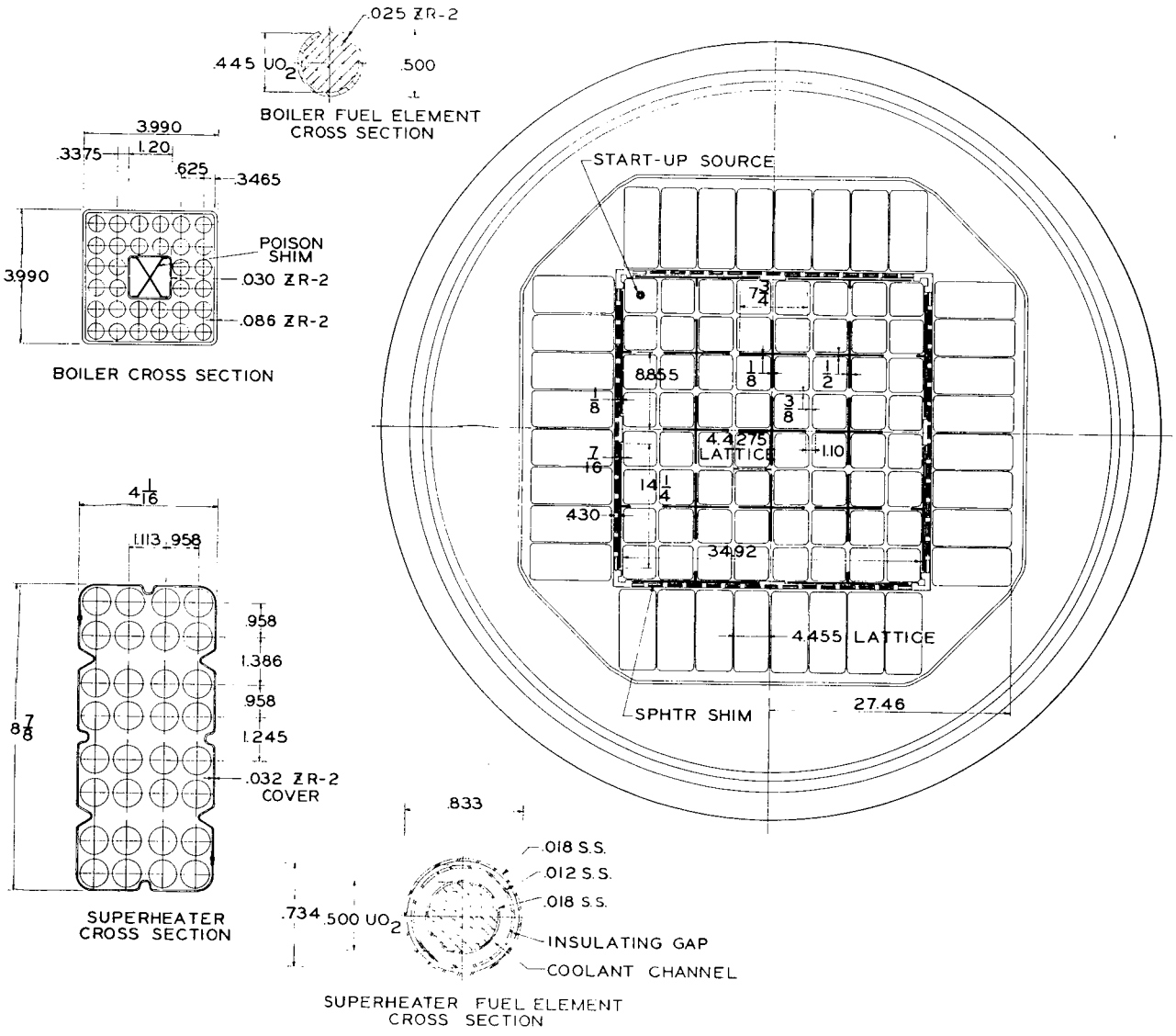

Fig. 203-1 Horizontal cross section of core.

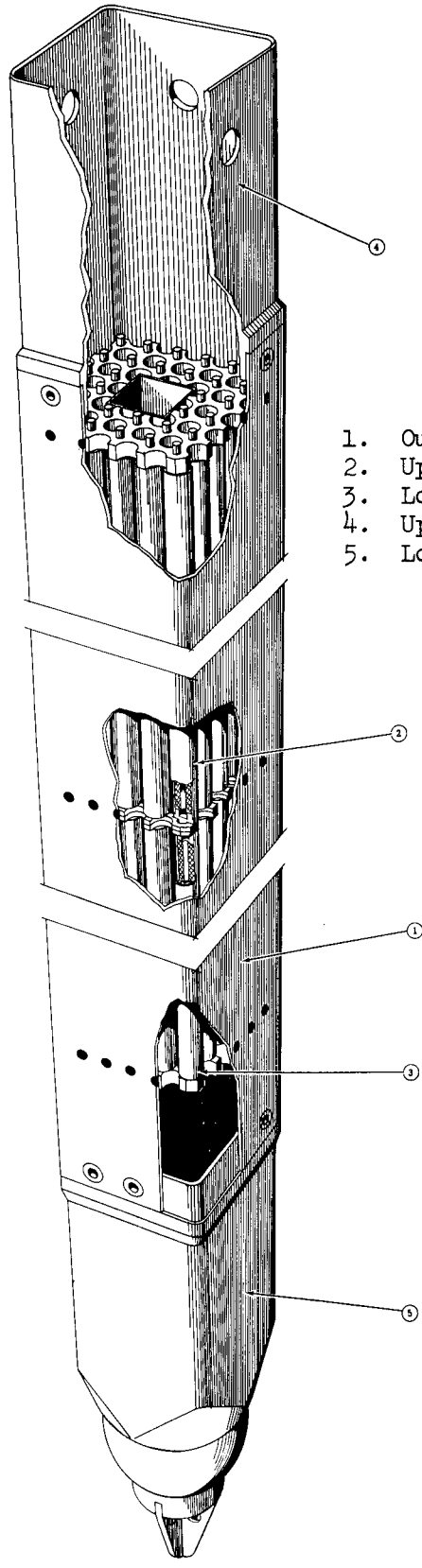

KEY

1. Outer Shell
2. Upper Enriched Fuel Bundle Subassembly
3. Lower Enriched Fuel Bundle Subassembly
4. Upper End Fitting
5. Lower End Fitting

Ref. Dwg. GNEC 66-M-34 CFC

Fig. 203-2 Perspective drawing of enriched boiler fuel assembly.

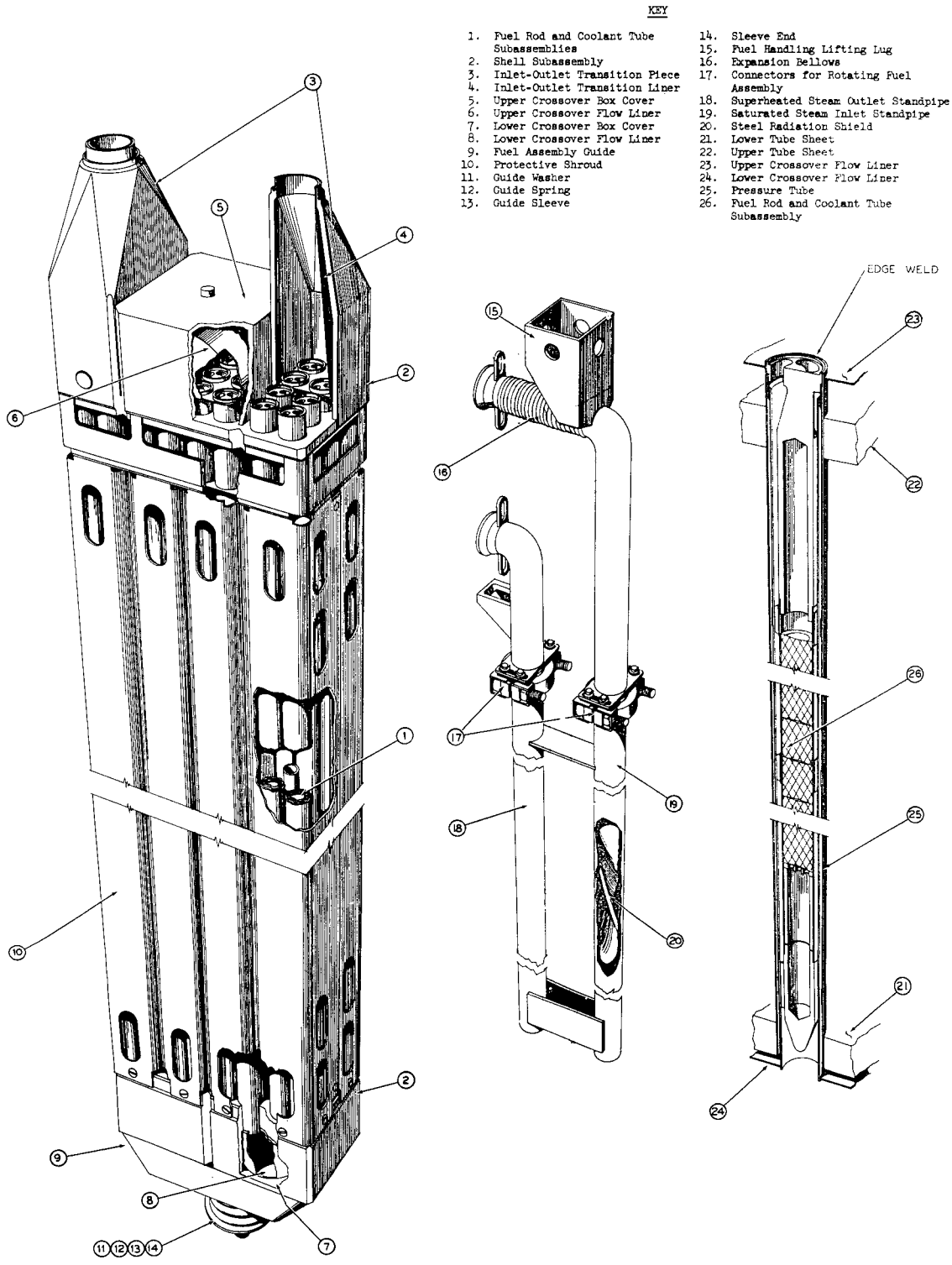

Fig. 203-3 Perspective of superheater fuel assembly.

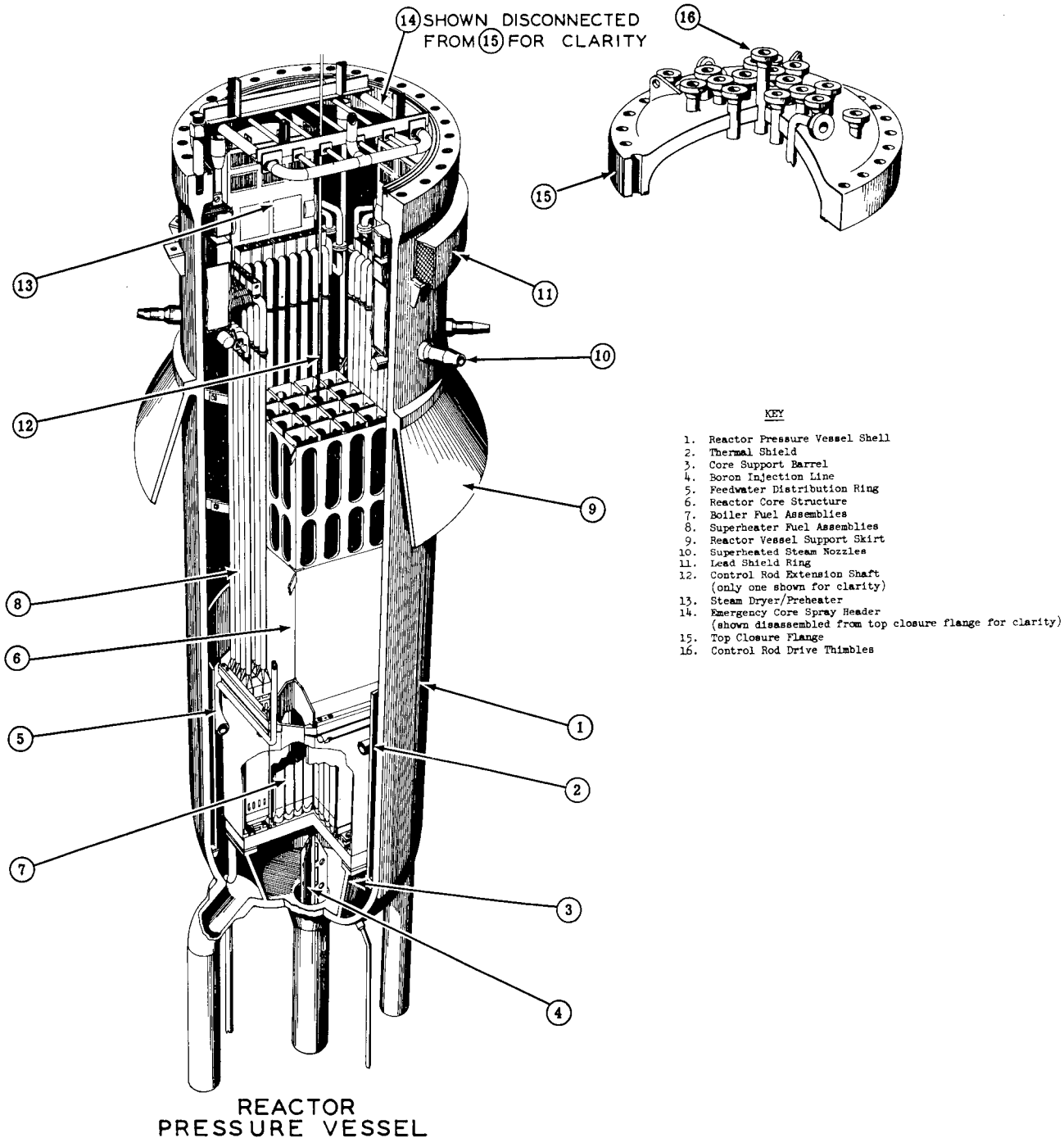

KEY

1. Reactor Pressure Vessel Shell
2. Thermal Shield
3. Core Support Barrel
4. Boron Injection Line
5. Feedwater Distribution Ring
6. Reactor Core Structure
7. Boiler Fuel Assemblies
8. Superheater Fuel Assemblies
9. Reactor Vessel Support Skirt
10. Superheated Steam Nozzles
11. Lead Shield Ring
12. Control Rod Extension Shaft (only one shown for clarity)
13. Steam Dryer/Preheater
14. Emergency Core Spray Header (shown disassembled from top closure flange for clarity)
15. Top Closure Flange
16. Control Rod Drive Thimbles

Fig. 203-4 Perspective drawing of reactor vessel and internals.

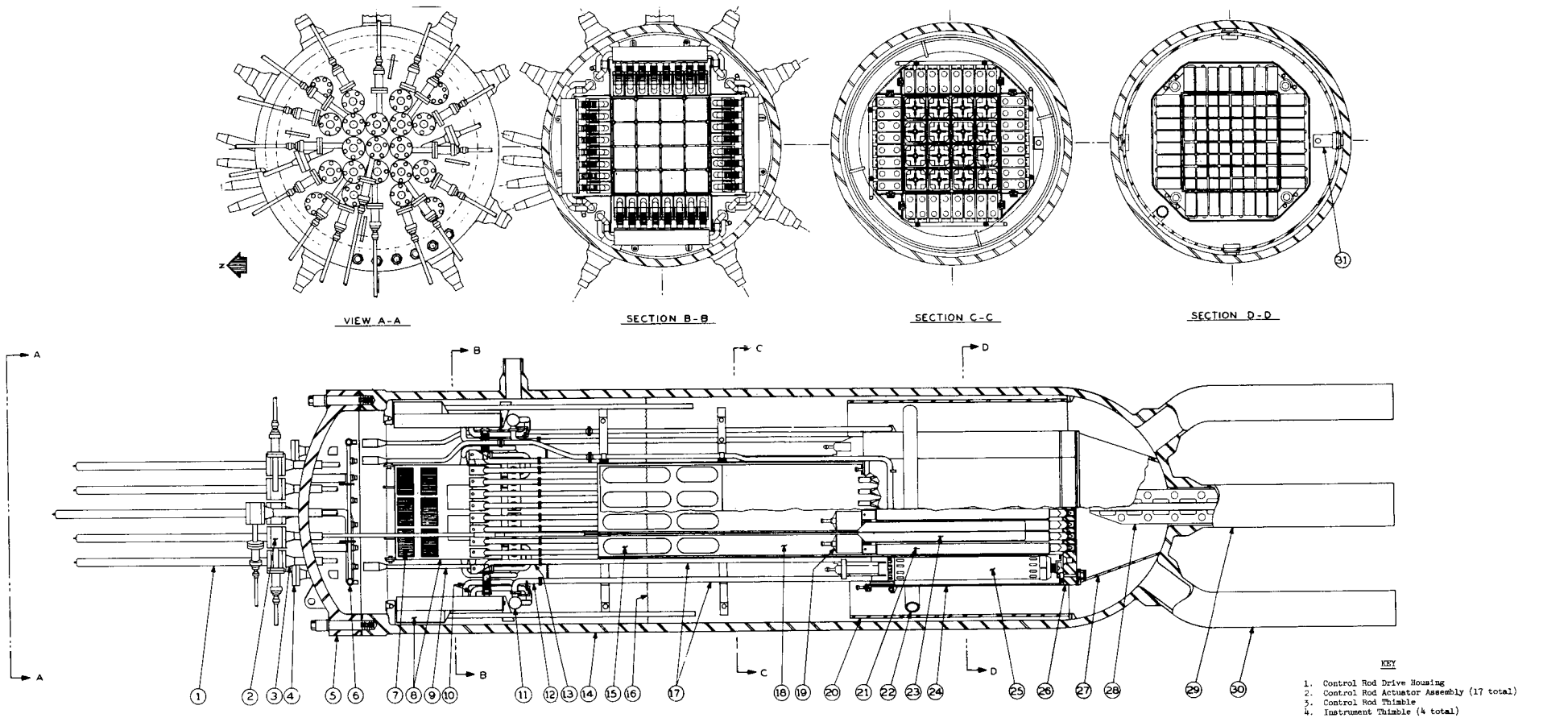

KEY

1. Control Rod Drive Housing
2. Control Rod Actuator Assembly (17 total)
3. Control Rod Thimble
4. Instrument Thimble (4 total)
5. Closure Head
6. Boiler Spray Header
7. Saturated Steam Inlet to Dryer/Preheater
8. Dryer/Preheater
9. Superheater Emergency Coolant Pipe
10. Steam Preheater Piping
11. Superheater Steam Outlet Header
12. Superheater Fuel Assembly Outlet Connector Pipe
13. Superheater Fuel Assembly Inlet Connector Pipe
14. Reactor Vessel
15. Recirculating Water Opening
16. Operating Water Level
17. Superheater Fuel Assembly Standpipes
18. Rod Guide Structure
19. Boiler Fuel Holddown Assembly
20. Thermal Shield
21. Boiler Fuel Assembly
22. Feedwater Spray Ring
23. Cruciform Control Rod
24. Baffle Support
25. Superheater Fuel Assembly
26. Core Plate
27. Core Support Barrel
28. Boron Injection Pipe
29. Recirculating Water Inlet
30. Recirculating Water Outlet
31. Charpy Impact Holder

Fig. 203-5 Vertical cross section of reactor vessel.

204. REACTOR PHYSICS

The unique reactor physics requirement of the integral superheat reactor is that control of the division of power between the boiler and the superheater regions of the core must be provided, while effective reactivity coupling between the two regions is maintained to preserve the neutron economy. In the BONUS reactor this is accomplished by absorbing, slab-type, control rods, which operate in channels between the central boiler region and the surrounding superheater regions, a further characteristic requirement of the reactor type is that the reactivity change should be small in the event that the superheater coolant channels, which are ordinarily occupied by steam, should be flooded with liquid water. This requirement, which is set by considerations of safety, is of the same sort as the more usual boiling reactor requirement, which applies in the boiling section of the BONUS reactor, for a small, but negative, void coefficient of reactivity; and it is met in the same way — by a suitable choice of fuel/moderator ratio. In this way, the reactivity effect of superheater flooding in the BONUS reactor is held to a low value for all operating conditions, amounting to a reactivity loss of 0.303% k_{eff} in the cold reactor, and a gain of 0.16% k_{eff} in the hot operating reactor under the normal program of control rod operation.

Although these typical requirements of the integral superheating reactor impose rather rigid restrictions on the reactor physics design, they are rather easily met once the equilibrium fuel reloading cycle has been established. This is a four-batch cycle in both boiler and superheater, with fuel discharge at an average exposure of 10,000 Mwd/ton, and with inward fuel shift for power flattening. Shutdowns for fuel reloading occur at approximately eight-month intervals, corresponding to exposure intervals of about 2500 Mwd/ton for the boiler fuel; a boiler fuel batch is replaced at every shutdown and a superheater fuel batch is replaced at every second shutdown.

The major reactor physics difficulty is posed by the objective of obtaining the nominal equilibrium fuel exposure of 10,000 Mwd/ton in the first fuel batch discharged from the reactor, before the equilibrium cycle has been established. For this purpose the initial fuel enrichments (2.40% for the enriched fuel in the boiler, 3.25% in the superheater) are considerably higher than the average enrichment of the core in the equilibrium fuel cycle. Boron-loaded absorbing shims are incorporated in the initial core — in central channels in the boiler fuel assemblies and in channels between the boiler and superheat regions — to give adequate reactivity shutdown margin, and to compensate most of the initial hot excess reactivity without undue distortion of the spatial power distribution (see Fig. 204-1). The shims are distributed nonuniformly, to afford both radial and axial flattening of the power distribution in the early stages of reactor operation, before preferential fuel burnup and fuel shuffling have established the flattening which

is characteristic of the equilibrium fuel cycle. Provision is made for changing shims at intervals of eight months of normal power operation (2500 Mwd/ton exposure of boiler fuel); between shim changes; burnup of boron in the shims compensates fuel burnup to the extent that the reactivity change, under power operating conditions, amounts to less than 1.5% k_{eff}. By the use of the shims, a shutdown margin of 3% k_{eff} or more is obtained, an average exposure of 10,000 Mwd/ton is obtained in all enriched fuel discharged, and the maximum/average power density ratio in the boiler is held to less than 3.70, even when the operating excess reactivity is abnormally high, before the buildup of equilibrium xenon. The normal maximum/average power density ratio in the boiler ranges from about 2.8 to 3.3 as the degree of control-rod insertion changes; the maximum/average ratio in the superheater of the new core, in the worst case, is 2.90, well below the maximum permissible value.

The 17 control rods of the reactor are grouped into four symmetrical banks: the single cruciform center rod; the four cruciform rods nearest the center, called the side rods; the four cruciform rods farthest from the center, called the corner rods; and the eight slab-type rods between the boiler and the superheater, called the blade rods (see Fig. 204-2). In starting up the reactor, the three banks of cruciform rods are withdrawn in sequence, as needed: corner rods first, side rods second, and center rod last. Very roughly, it may be considered that the corner rods provide the shutdown margin and compensate the reactivity corresponding to the temperature defect, that the side rods compensate the reactivity available for the production of steam void and for compensating equilibrium xenon and samarium, and that the center rod controls the reactivity available for fuel burnup. The blade rods control the power split between the boiler and the superheater, but they also affect the over-all reactivity, and thus interact with the cruciform rods and modify their applications to some extent.

The temperature coefficients and void coefficients of reactivity for the boiler coolant water are negative for all operating conditions over the lifetime of the reactor. The total reactivity invested in steam voids in the reactor at full power varies somewhat with the pattern of control-rod insertion. For a pattern approximating the highest case the reactivity worth of the 23% average void in the boiler coolant water channels amounts to -3.3% k_{eff}.

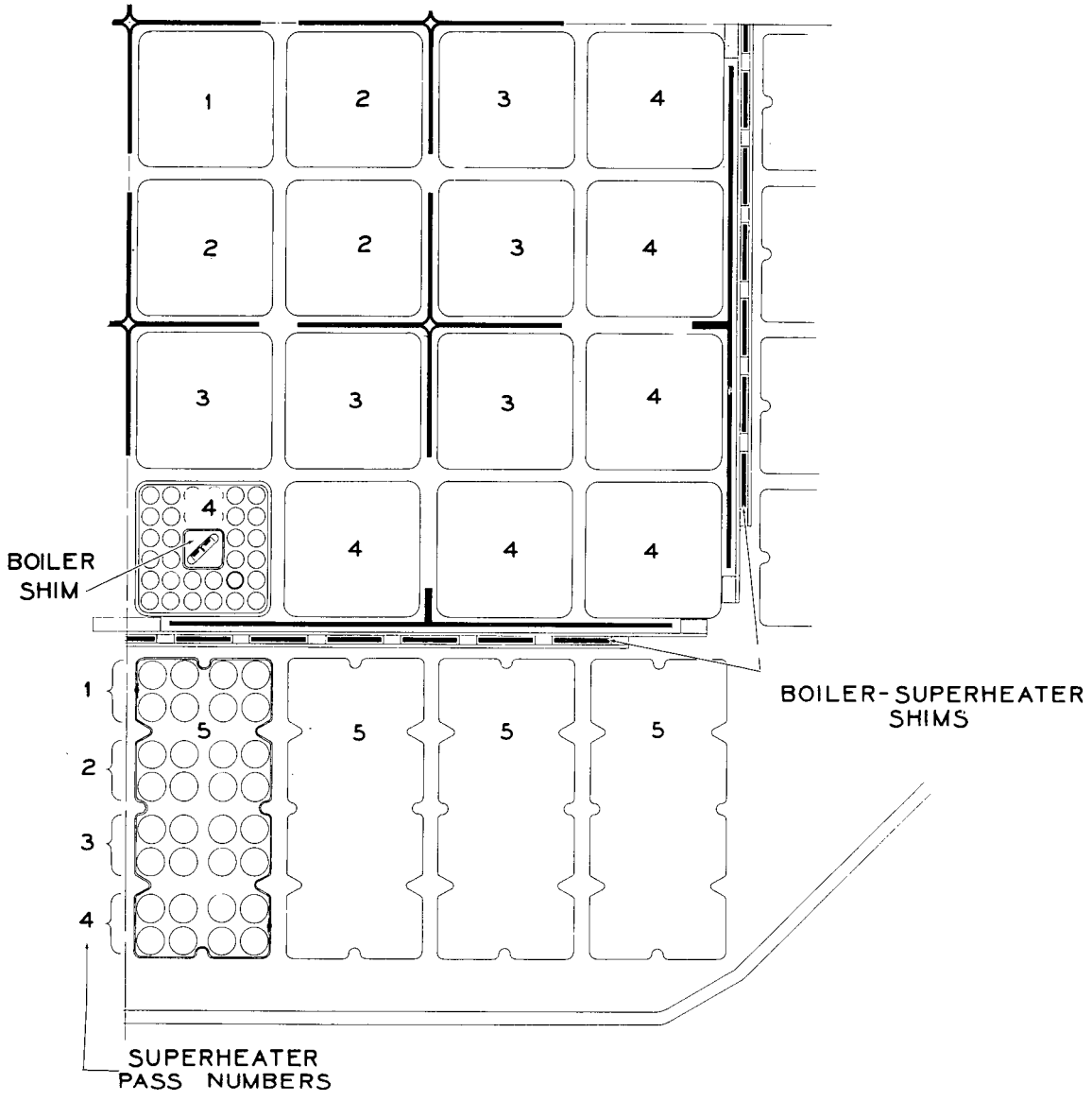

Fig. 204-1 Locations of poison shims and types of fuel assemblies.

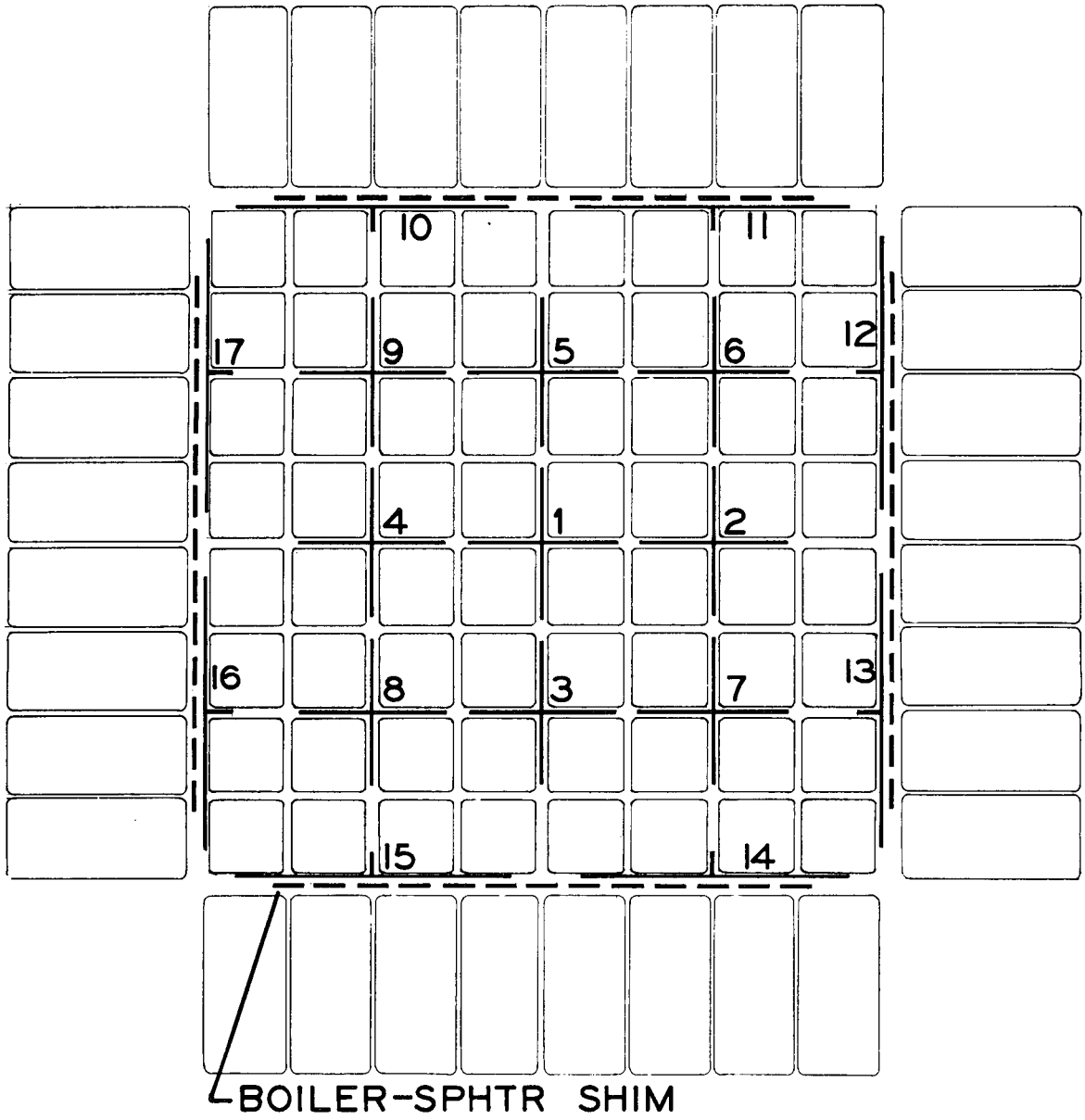

CONTROL ROD BANKS

ROD NUMBER	BANK DESIGNATION
1	CENTER ROD
2,3,4,5	SIDE RODS
6, 7, 8, 9	CORNER RODS
10 TO 17	BLADE RODS

Fig. 204-2 Horizontal cross section of BONUS core showing control rod locations.

205. REACTOR AUXILIARIES

Although the strength of the seventeen control rods is calculated to make the reactor subcritical by 3.0% Δk or more under all circumstances, an additional shutdown mechanism is provided in the form of a solution of boric acid which can be made to flow into the reactor by gravity upon opening of pressure equalizing valves. This solution will make the cold clean reactor subcritical by at least 5.2% Δk even if all control rods were jammed in fully withdrawn positions.

A continuous flow of 15 gpm of reactor water through a system of filters and ion exchange columns keeps the total impurity content of the reactor water below 1 ppm. Heat exchangers are used to reduce the temperature of the water to 120°F before it reaches the ion exchange resins. The secondary cooler of the reactor water purification system is made large enough so that it can also be used to remove fission product decay heat and thus maintain the reactor water at low temperature for refueling operations.

High purity is especially important for the coolant of an integral boiling-superheater reactor; the reactor water must be particularly low in chlorides so as to prevent chloride stress corrosion problems with the stainless steel in the superheater zone. Deposition of residue from evaporation of moisture entrained in the steam entering superheater fuel assemblies can interfere with heat transfer and cause excessive fuel cladding temperatures. Troublesome radioactive contamination of the turbine can also occur if this residue were swept along by the steam after being deposited temporarily in a region of high neutron flux.

In addition to the reactor water purification system for maintaining the water within the reactor vessel at high purity levels, all of the condensate is passed through demineralizers to prevent the entry of corrosion products into the vessel. The steam dryer/preheater will also minimize the radioactive contamination problem by plating out corrosion products entrained with the water droplets before the steam enters the superheater fuel zone.

An emergency condenser is provided to serve as a sink for reactor heat if the main condenser is withdrawn from service or all electric power were lost. Automatic valves leading to this condenser allow steam to flow to the emergency condenser whenever there is a loss of power or whenever turbine bypass valves fail to open to the main condenser upon closure of the turbine admission valves or the turbine trip valve. The amount of water stored in the emergency condenser is adequate to remove reactor shutdown heat for a period of 8 hours without any make-up. The heat absorbed by the emergency condenser corresponds to 4.2% of reactor rated power.

To prevent melting of fuel elements in the core if all water is lost from the reactor pressure vessel, spray nozzles are mounted inside the vessel so that both the boiler fuel elements and superheater elements can be sprayed generously with water. The water flows by gravity from elevated water storage tanks outside the reactor containment building. The elevated water storage tanks also supply water for the containment building spray system.

An electric preheater is provided for raising the reactor water to near operating temperature before each reactor startup. An interlock system prevents withdrawal of any control rods until the water temperature exceeds 500°F. The preheater also generates the steam necessary for cooling the superheater fuel elements after the water has been expelled from them and while the reactor is being made critical by slowly withdrawing control rods. After normal steam flow is established from heat generated by the reactor itself, the electric heater is turned off.

A shield-cooling loop, consisting of water pumps, heat exchanger, filters, and an expansion tank, removes heat generated within the reactor shield as a result of absorption of radiation therein or heat transferred thereto from the reactor pressure vessel, piping, etc., by normal thermal processes.

A combined cooling and water purification system removes decay heat and impurities from water in the fuel storage pool. This water is kept clean and cool for good visibility and to minimize corrosion or contamination of stored fuel assemblies.

206. POWER PLANT

The power generation equipment is conventional except for a few relatively minor alterations necessitated by the radioactivity in the system and by the potential corrosiveness of the oxygenated steam and feedwater.

The eleven superheater outlet pipes are monitored for temperature and steam flow rate before they merge into a single steam pipe. The combined flow then passes to an attemperator (Fig. 206-1) where the proper amount of feedwater is automatically added to reduce the steam temperature to 900°F. The steam then flows through the main turbine to the condenser. Condensate is withdrawn from the condenser hotwell by two 75 per cent capacity condensate pumps and is forced through the air ejector after-coolers, the gland seal condenser, condensate purification units, and three low-pressure feedwater heaters to the main feedwater pumps. The two 60 per cent capacity feedwater pumps increase the pressure of the condensate to approximately 1060 psig and force it through the high-pressure feedwater heater and the feedwater regulating valve back to the reactor through a distribution ring located in the downcomer of the reactor pressure vessel. The temperature of the feedwater entering the reactor is 354°F.

Stainless steel piping is used for all primary circuits containing reactor water to minimize the introduction of corrosion products into the reactor. The main steam pipe from the outside of the reactor shield to the turbine is made of 1-1/4 Cr-1/2 Mo steel. Impurities introduced into the steam from this piping are relatively minor compared to the amount introduced from the turbine itself. In any event, these impurities are removed by the full-flow filters and demineralizers in the feedwater line leading from the condenser to the reactor.

The turbine-generator unit has a nominal rating of 16,500 Kw at a condenser pressure of 3.5 in. Hg and 3 per cent water make-up. The condenser actually operates at a back pressure of 2.0 in. Hg, with no make-up, so the turbine-generator output is correspondingly increased to 17,500 Kw. This represents a gross cycle efficiency of 35.0 per cent. When local consumption is subtracted, the net electric output of the station is about 16,500 Kw.

The turbine-generator unit materials of construction are standard. The unit is different from one in a conventional plant due to the need for shielding the turbine and for reactor pressure control.

The turbine admission valves are controlled to accept whatever quantity of steam the reactor produces. This is accomplished by having the admission valves respond to pressure signals from the reactor vessel to hold the reactor pressure constant. If the reactor should produce more steam than the turbine can handle, the turbine will trip out, the

reactor will be shut down automatically, and the steam will be bypassed to the condenser by means of a bypass pressure-regulating valve. The main condenser is capable of condensing the full steam output of the reactor when the turbine bypass valves are opened. An attached desuperheater prevents damage to the aluminum-brass condenser tubes.

The condensate and feedwater pumps are essentially standard construction types. The two condensate pumps force the condensate through the first three feedwater heaters and provide the required head to prevent cavitation at the inlets of the feedwater pumps. Shaft seals are the mechanical type, cooled by condensate. Water leakage from the seals is collected and drained to retention tanks.

Before reaching the feedwater heaters, all reactor feedwater is pumped through the condensate purification system. This equipment consists of pre-filters, ion exchange beds, and after-filters for removing particulate and dissolved impurities picked up in the turbine and condenser. In case of a condenser tube failure resulting in entry of salt water into the feedwater, conductivity meters and salinity detectors cause an alarm in the control room and bring about a reactor shutdown. The ion exchange columns can remove salt from the feedwater until the feedwater is turned off.

The steam jet air ejectors are oversized to accommodate the radiolytic hydrogen and oxygen coming from the reactor, plus the normal air discharge. The gases withdrawn from the main condenser in this manner are sent through a two-minute holdup tank before being filtered and mixed within the 50,000-cfm building ventilation air that is exhausted through the main stack. If abnormal radioactivity is detected in the exhaust gases, which may possibly indicate a fuel element cladding failure, the air ejector exhaust gases can be diverted to a vaporsphere, which has enough capacity to permit continued operation of the ejectors for at least 30 minutes. During that time, the source of the radioactivity can be determined and normal operation resumed, or the reactor can be shut down for removal of a faulty fuel element, as seems appropriate.

A gland steam condenser cooled by condensate from the main condenser is used to condense steam drawn from turbine seals. A small blower withdraws noncondensible gases from the gland seal condenser and forces them into the lines leaving the main condenser air ejectors. In this way, a negative pressure is maintained in the outer turbine gland seals, thereby preventing escape of any radioactive steam to the room.

The first three feedwater heaters are of standard construction. The fourth, a high-pressure heater, is equipped with monel tubes to minimize corrosion from the relatively high-temperature oxygenated steam to which the outside surfaces of the tubes are exposed. Steam for the four heaters is withdrawn from the turbine at approximately 8, 27, 64, and 163 psia, respectively.

Sea water is used for cooling the main condenser. The pumps are located outside the reactor building near the intake screens and deliver a total of 17,800 gpm of water to the condenser.

A cooling tower is used as a heat sink for cooling various plant auxiliary equipment to which salt water might be damaging. The cooling tower is capable of delivering a total of 700 gpm of fresh water at 90°F to the auxiliary cooling system.

Conventional practice is followed in designing the electrical system for the station except for a greater emphasis on continuity of power to certain items of equipment which are vital to the safety of the plant. The output of the station is connected to two separate PRWRA transmission lines. Certain transformers are duplicated to insure continuity of power to plant auxiliaries. A 150-Kw diesel generator automatically starts and begins to supply power to critical items in the event that all incoming power is lost. An independent battery d-c supply provides uninterrupted power to certain nuclear instruments and to essential plant auxiliaries.

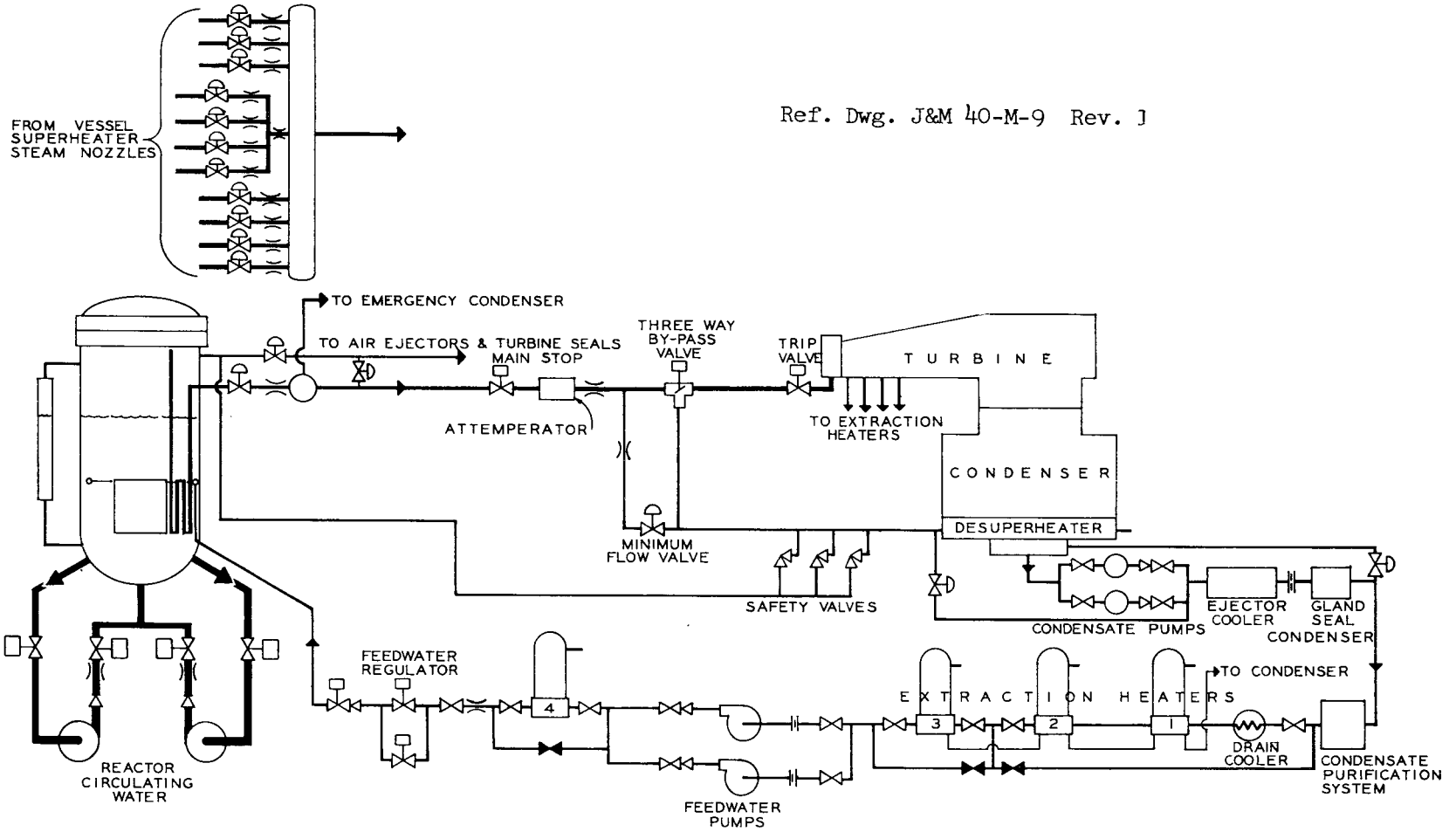

Ref. Dwg. J&M 40-M-9 Rev. J

Fig. 206-1 Simplified steam cycle diagram.

207. INSTRUMENTATION AND CONTROL

The BONUS plant, in general, uses nuclear and non-nuclear instrumentation and control systems which are similar to those used in other boiling-water reactor plants. These semi-standard instrumentation systems, such as the reactor nuclear monitoring system, the area monitoring system, the reactor water level system, and fuel-element failure detection system, are fully described in the main body of this report.

The major instrumentation and control systems which are peculiar to this plant have to do with the reactor pressure control system, the superheater temperature control system, and the reactor safety and interlock system.

The BONUS reactor pressure is maintained constant within $\pm$ 5 psi by either of two control systems. In general, one system, the turbine admission valve control system, is used during electrical power generation, and the second system, the turbine bypass valve control system, is used when the turbine-generator is not generating electrical power.

During electrical power generation, the reactor pressure is maintained constant by controlling the synchronizing motor on the turbine which in turn regulates the position of the turbine admission valves. The BONUS plant will, therefore, operate as a constant-load plant delivering to the distribution line that amount of power being generated by the reactor. If the reactor pressure increases beyond the regulating range of the turbine admission valve, the minimum flow bypass valve will automatically bypass the excess steam up to the limit of its capacity.

When the turbine-generator is not on the line, the reactor pressure is controlled by the turbine bypass valve control system which regulates the bypass steam flow to the condenser.

Under various conditions which may cut off the steam flow from the reactor, such as a turbine tripout, the reactor will be scrammed automatically, the minimum flow bypass valve will open fully to maintain steam flow through the superheater and the turbine bypass valve will be placed on automatic reactor pressure control.

Control of the reactor power will be manual until operational characteristics have been assessed quantitatively. Seventeen control rods — nine cruciform-type in the boiler zone and eight blade-type between the boiler and superheater zones — are used to control the total power of the reactor and the power split between the boiler and superheater zones.

An analysis of the dynamic characteristics of the BONUS reactor at rated power indicates a much higher degree of stability than the EBWR operating at its rated power level. The improved stability is primarily due to the higher operating pressure, to the use of fuel with a longer

thermal time constant (UO_2 versus uranium metal), and to the cooling of the boiler portion of the core by forced circulation.

Maintaining the superheated-steam outlet temperature constant, irrespective of changes in over-all reactor heat output required to accommodate changes in electric load, is one of the major problems in designing an integral boiling-superheating reactor. Reductions in over-all heat output can be readily accomplished by inserting control rods, but this must be done without distorting the ratio of the heat output of the boiler to the heat output of the superheater. Insertion of control rods in the boiler zone must be paralleled by insertion of rods in the superheater by amounts such that the power ratio, as indicated by steam outlet temperature, remains constant. Since perfection cannot be expected in this manipulation of control rods, the steam outlet temperature of the BONUS plant will be allowed to vary slightly, as necessary, within the range 900 to 925°F. The steam temperature, within this range, will be reduced to about 900°F before the steam reaches the turbine by automatically controlled injection of the required amount of feedwater into the steam in an external attemperator.

The control system for guaranteeing flow of coolant steam through the superheater fuel at all times is an important safety feature. When the turbine admission or trip valve closes and stops the flow of steam to the turbine, superheater fuel would be damaged if another steam flow path were not opened up. In the BONUS design, two heat sinks are available: 1) the main condenser and 2) the emergency condenser. The latter requires no electric power for its operation over an eight-hour period. Upon stoppage of steam flow to the turbine or upon power failure, valves automatically open in bypass lines which lead to one or both of these heat sinks. An adequate supply of steam to prevent damage to the superheater fuel is, thereby, assured.

The reactor water level is regulated by means of a conventional three-element flow control system. The feedwater admission valve normally balances at a position where the steam flow is equal to the condensate return flow. The reactor water level signal is used to adjust the regulator valve transiently to correct any changes in reactor water level.

208. CONTAINMENT BUILDING

The BONUS Station features a containment building which is different from the usual structures associated with nuclear power plants. The design is based on the total containment principle; i.e., the pressure-tight building houses not only the reactor and its associated auxiliaries, but also the turbine generator, electrical equipment, and control, service, and sanitary facilities. The total containment design philosophy was adopted over the conventional nuclear two-building arrangement where the reactor is housed within a smaller pressure shell and the turbine gear in a standard utility-type structure, since the former offered the following apparent advantages over the latter;

1) Reduced number of pressure-sealed mechanical and electrical penetrations, minimum runs of piping which require isolating valves.
2) The reduced pressure level simplifies such structures as the air locks, makes pressure sealing easier, and increases the chance of escape and survival by the operating personnel in the event an accident occurs and the building is pressurized with steam.
3) Improved communications and visual contact between operators; also, single building convenience provides operational safety and efficiency.
4) Because of the high water table at the BONUS site, (approximately 1 ft above sea level) the shallow flat bottom permitted by the low-pressure building reduced excavation problems. A conventional containment building would go below sea level and the water table would be a problem.
5) Low pressure design is particularly well suited to use with composite concrete and steel structures which are attractive from a cost standpoint.

The containment building, shown in cutaway view in Fig. 208-1, consists of a 166 ft, 8 in. diameter steel shell with hemispherical roof and the concrete mat to which the steel shell is anchored and sealed. A concrete retainer wall anchored to the foundation mat encloses the cylindrical shell portion of the steel structure. The juncture of the shell with the foundation mat is made gas tight with sealing compounds that were rigorously tested prior to use. The large extent of the foundation mat surface is made gas tight with a membrane covering consisting of two plys of roofing felt saturated with alternate layers of waterproofing pitch. The containment building is designed for the following: internal pressure, 5 psig; external pressure, 1/4 psig; wind speed, 150 mph; leakage rate, not to exceed .2% of the building net volume (1.59×10^6 cu ft) per day with internal 5 psig pressure. The verification of the structural design and leaktightness of the building has been demonstrated by a pressure-proof test at 6.25 psig, a vacuum

test at 1/4 psig and a three-day leak rate test with 5 psig internal pressure. The measured daily leak rate without the membrane seal in place but with 2 inches of water on the foundation mat, was 0.09 per cent; a factor of two less than required.

Figure 208-1 shows a perspective view of the building and some of the equipment inside the building. Access to the building is through double door airlocks which are sealed by soft rubber gaskets. Entry into the plant is from the entrance building airlock; a service airlock is also provided for emergency and small-stores equipment handling. A bolted, sliding freight door permits truck entry into the plant when the reactor is shutdown. A 60-ton polar gantry crane permits heavy equipment handling inside the building.

Fresh air is circulated through the containment building at a rate of 50,000 cfm to remove heat and to preserve a fresh atmosphere. The ventilation air also serves as a diluent for the small amount of radioactivity from the main condenser air ejectors before this radioactivity is discharged from the stack outside the containment building.

An entrance building of conventional masonry construction is located just outside the main airlock for the containment building. This entrance building is occupied by clerical personnel who are employed at the station but who are not directly involved in the operation of the equipment. A limited amount of information about the operation of the plant, such as information concerning the reactor power level, the reactor water level, and the building radioactivity level, is indicated on instruments in a shielded room inside the entrance building. This shielded room, the "pillbox," is provided to allow personnel to remain near the reactor during an accident involving personnel evacuation from the reactor building to monitor certain plant processes and initiate safety actions. From this station the reactor can be scrammed, boron poison injected into the vessel and the building spray and core spray water systems initiated.

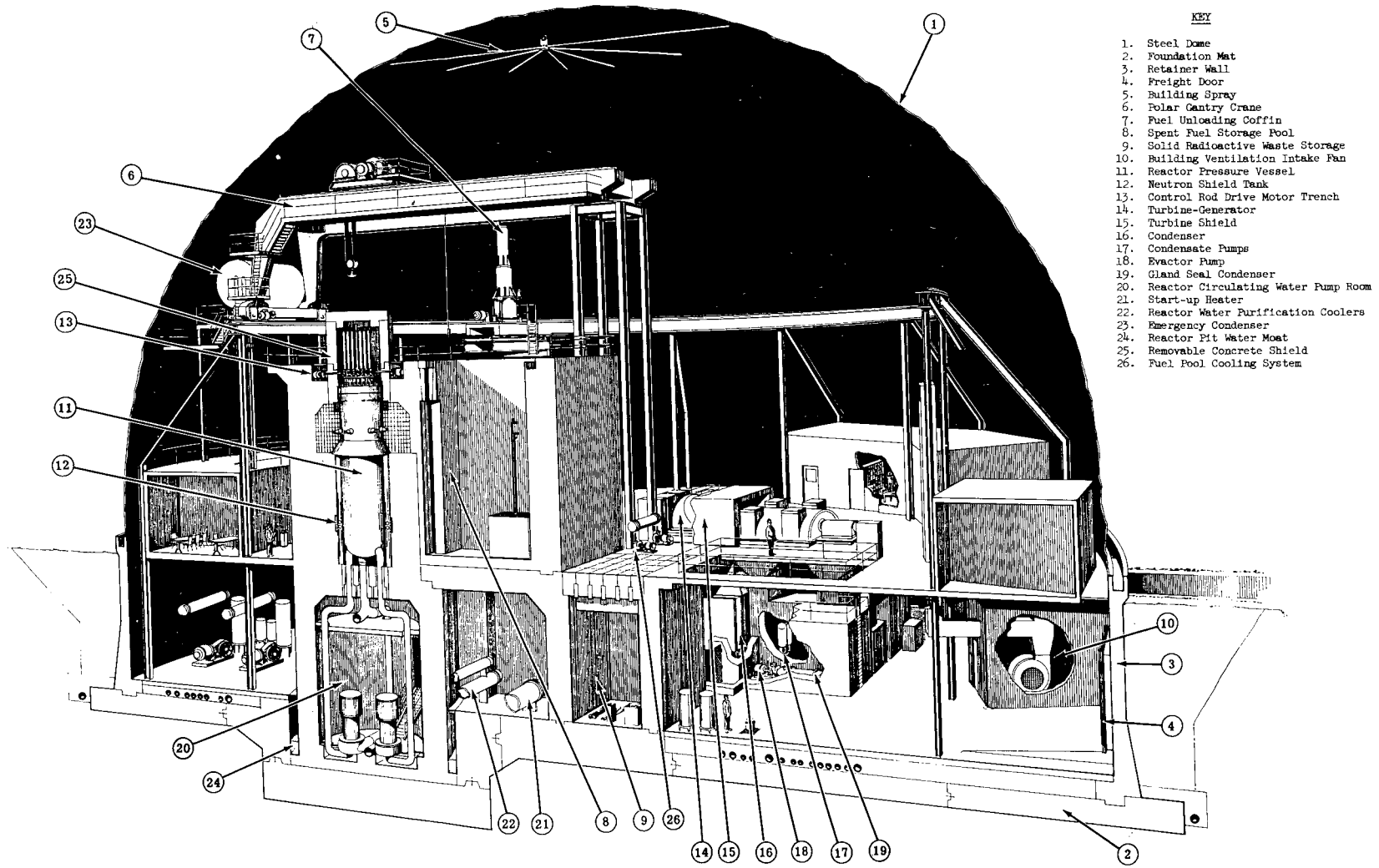

Fig. 208-1 Perspective of containment building.

209. SITE

The Punta Higüera site of the BONUS Power Station is at the westernmost end of Puerto Rico. The relationship of this site to the island of Puerto Rico and to adjacent islands is indicated on Fig. 209-1. A map of the site itself (see Fig. 209-2) shows elevations, location of roads, streams, etc. An aerial view of the site is shown on Fig. 209-3.

The average elevation of the ground around the containment building is 25 ft above sea level. Because of the earth embankment around the containment building, the "man made" ground level extends up to 40 ft. elevation. The natural grade slopes down to the sea west of the plant, providing excellent drainage. The surrounding land slopes upward to the mountain range to the east of the plant.

The site exclusion area, defined by a barbed wire fence, extends a minimum of 0.3 miles from the reactor containment building. The community nearest to the site, at a distance of 2 miles, is the town of Rincon having a total population of 1094. Within a 2-mile radius there are 2044 rural inhabitants. The nearest large city Mayaguez, with 58,887 inhabitants, is located 13 miles to the southeast. The Puerto Rico Nuclear Training Center is located in Mayaguez. Ramey Field of the U. S. Air Force Strategic Air Command, is located 13 miles to the northeast.

Thirty-one (31) core drillings were made to determine subsoil conditions and for the design of the containment building foundation slab. The drillings showed compositions which varied considerably in detail, but all except two adjacent core drilling indicated suitable conditions for erection of the building and other site structures; the two core drillings indicated a subsurface cavity which was later pressure filled with cement grout. A typical representative core drilling showed the first five feet was composed of dark sandy clay. This was followed by sandstone, 5 ft in thickness. The uppermost stratum consists of a silty sand and cemented sand as sandstone in different degrees of strength and varying in thickness from 7 to 17 ft. Some sandstone required boring with a diamond drill. Underlying this upper stratum is a heterogeneous mass of sandy clayey silt with pieces of limestone rock and silt clay or sand. Most of the borings were bottomed in a gray and brown silty clay stratum about 100 ft deep. Three holes were drilled to greater depths in an effort to reach bedrock but none was encountered.

From the standpoint of earthquakes, the seismic history of Puerto Rico places it in a Zone-2 category. Structures and equipment have been designed to minimize the possibility of earthquake damage. The anticipated earthquake conditions at the site are less severe than at some sites where reactors have already been built along the west coast of the United States.

A single well was drilled within the site boundary to supply part of the required amount of fresh water. This is supplemented by the Rincon City Aquaduct.

The climate of Puerto Rico is mild. At the western tip of Puerto Rico, the highest temperature ever recorded was 98°F; the lowest was 55°F. The average annual rainfall is about 75 inches. From 1899 to 1961, 11 storms producing winds of hurricane speed touched some part of Puerto Rico; during the same period, only 3 of these storms produced winds of 75 mph or greater over the entire island. The BONUS plant buildings and other site structures have been designed to withstand wind velocities of 150 mph.

Puerto Rico is located in a belt of the trade winds, or tropical easterlies, which are known to be one of the most persistent and steady wind regimes of the world. Near ground level, the winds usually blow from the northeast, east, or southeast except during the night hours when the wind direction at times has been noted to blow from the sea towards the land.

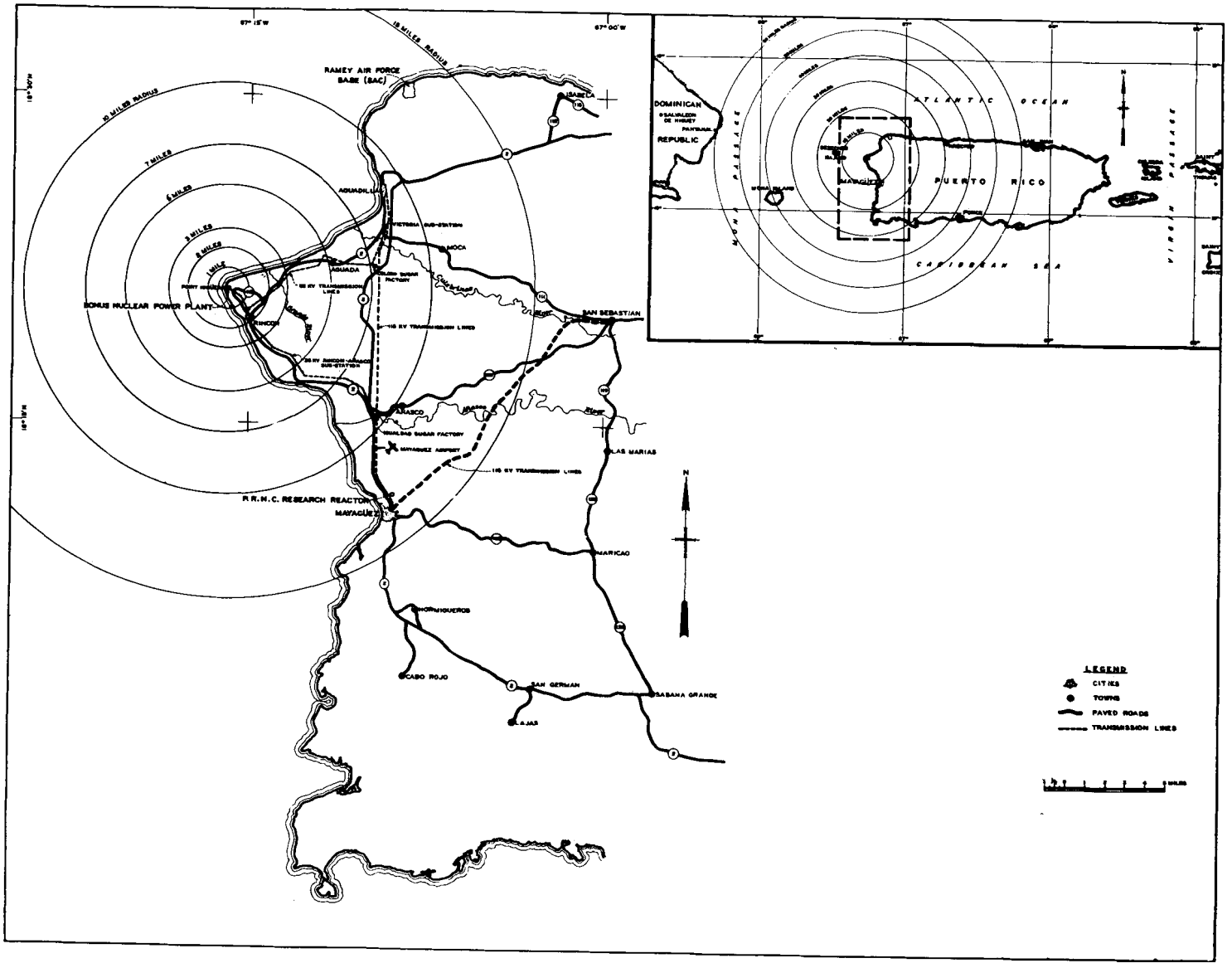

Fig. 209-1 Site location map.

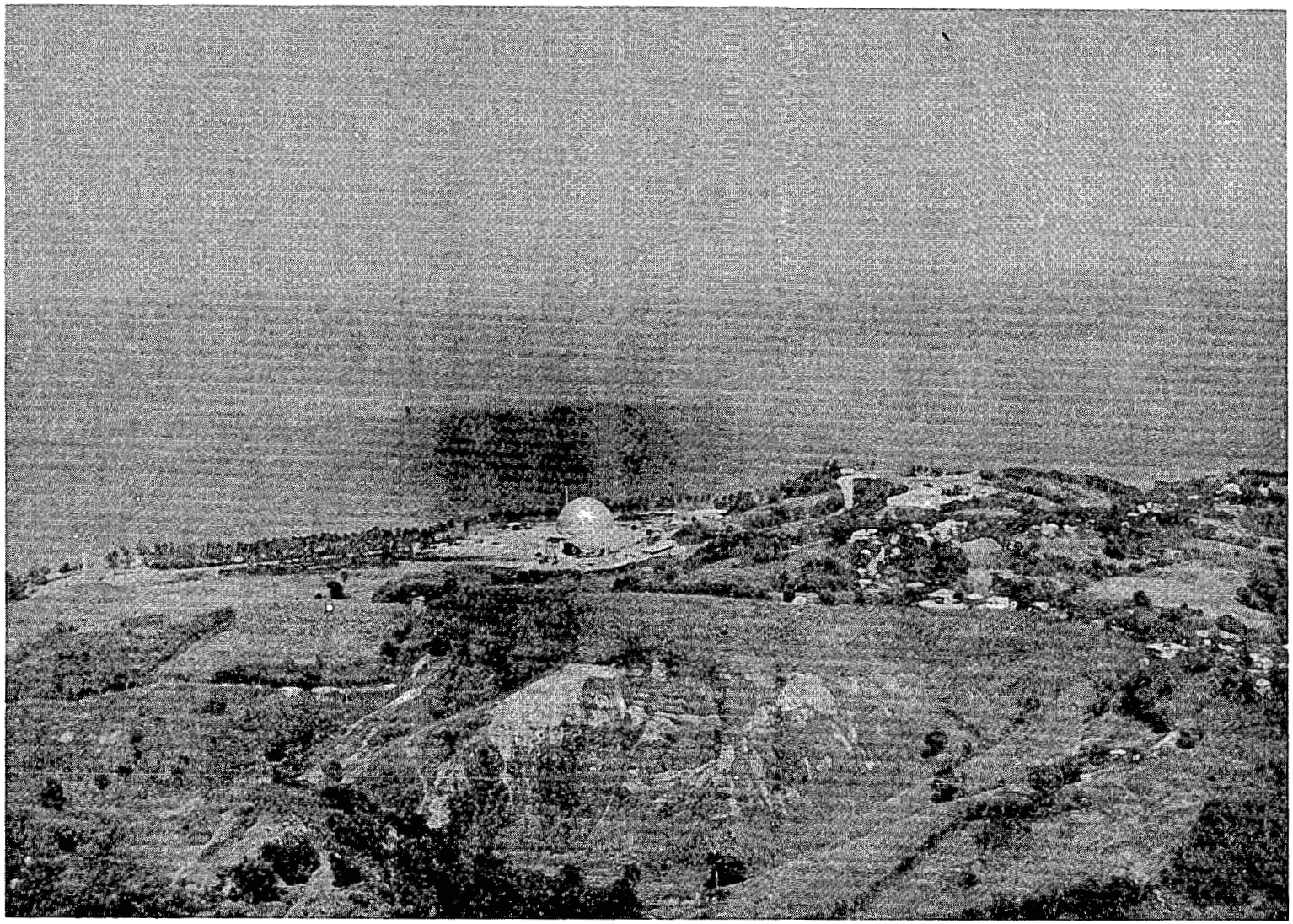

Fig. 209-2 Site aerial view looking toward the northwest.

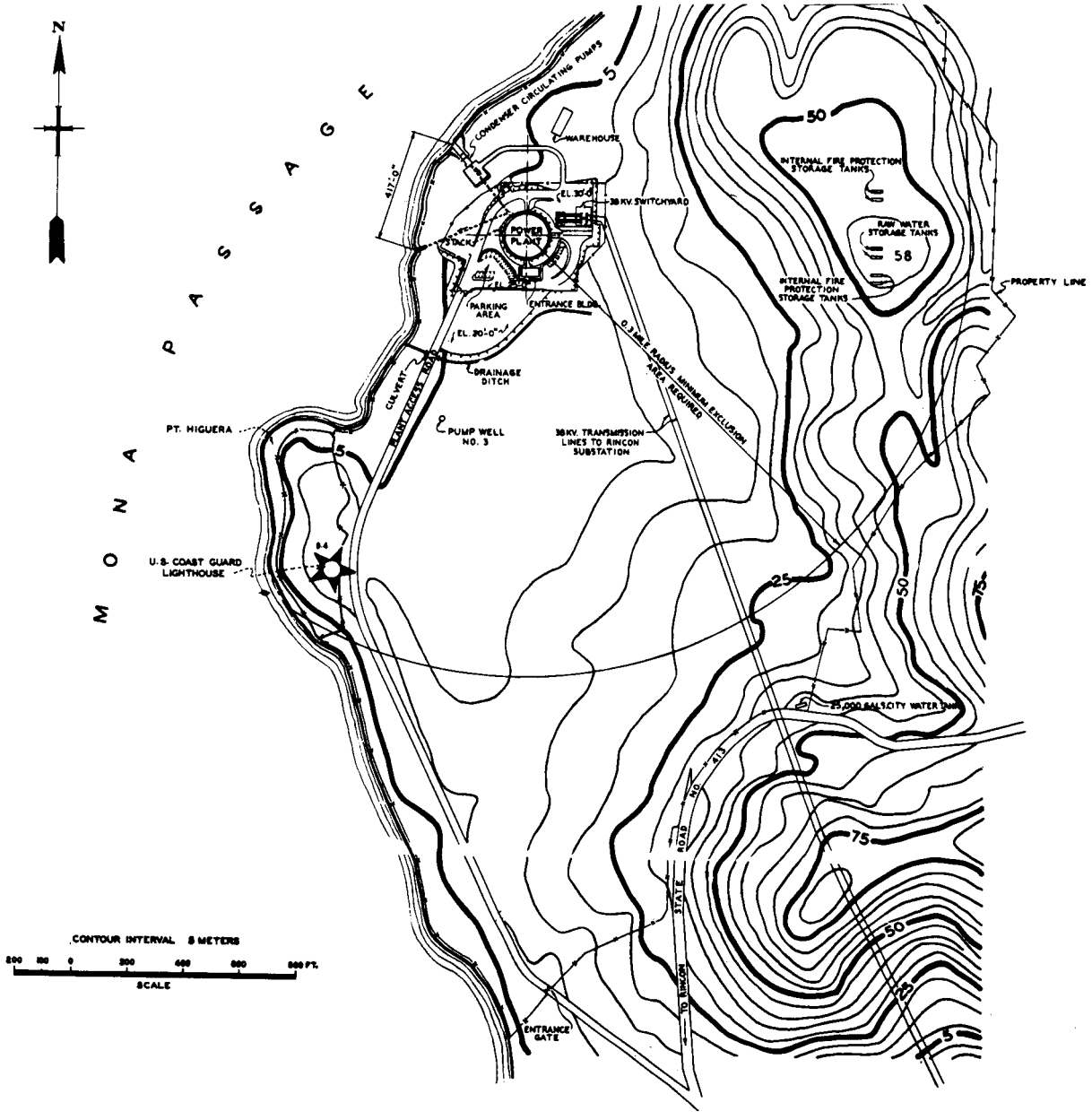

Fig. 209-3 Site map.

210. SUMMARY OF DESIGN AND PERFORMANCE DATA

General

Reactor type	Thermal neutron, heterogeneous, H_2O moderated
Reactor heat transfer system	Integral boiling-superheating within pressurized vessel
Reactor coolant	Water and steam (H_2O), forced circulation
Reactor fuel	Uranium dioxide (UO_2), natural and slightly enriched
Steam cycle	Direct, superheated steam
Estimated net electric output, Kw(e)	16,500
Gross electric output, Kw(e)	17,500
Total reactor thermal output, Kw(t)	50,000
Net power to boiling, Kw(t)	38,400
Net power to superheating, Kw(t)	11,600
Gross cycle efficiency, %	35.0
Net cycle efficiency, %	33.0
Total reactor steam flow, lb/hr	152,000
Total reactor water flow, gpm	9,000
Reactor nominal operating pressure, psig	950*
Reactor saturated steam temperature, ^{o}F	540
Reactor nominal superheated steam temperature, ^{o}F	900
Turbine nominal inlet steam pressure, psig	850
Reactor feedwater temperature, ^{o}F	354

Reactor Core

	Core Regions	
	Boiler	Superheater
Size and geometry of active core	35.4 in. square x 54.6 in. high	Four slabs adjacent to boiler region; 35.2 in. x 9.8 in., x 54.6 in. each

* The operating pressure may be as high as 975 psig, depending on the final as-built piping pressure drops.

	Core Regions	
	Boiler	Superheater
Effective outside diameter, ft	3.34	4.83
Moderator and reflector material	H_2O	H_2O
Structural metal within active core	Zircaloy-2	Stainless steel and Zircaloy-2
Fuel material	UO_2, sintered pellets	UO_2, sintered pellets
Number of fuel assemblies	64	32
Fuel loading (tons U element)	2.81	1.79
Average specific power (Mw(t)/ton U element)	13.2	7.25
Average region power density (Kw(t)/liter of region)	33.6	11.5
H_2O/UO_2 volume ratio (without control rods; superheater unflooded)	2.4	3.85
Total steam flow from coolant channels, lb/hr	143,000	152,000
Total steam flow from moderator, lb/hr	9,000 (both regions)	
Total water flow to coolant channels, lb/hr	3.226×10^6	---
Total water flow to moderator, lb/hr	134,000	---
Volume composition of active core, %		
Water moderator other than coolant	25.2	58
UO_2 fuel	25.4	15
Coolant*	35.1 (steam-water)	13 (steam)
Steam insulation	---	6
Structural metal	7.6 (Zr-2)	2 (Zr-2); 5 (S.S.)
Fuel clad	6.1 (Zr-2)	2 (S.S.)
Helium fuel-to-clad thermal bond	0.6	---

Fuel Assembly

Total number of assemblies (max. possible)	68	32
Total number of assemblies (normal)	64	32

* Coolant water is not identified as moderator here, although it has a moderating function in addition to its coolant function.

	Core Regions	
	Boiler	Superheater
Fuel elements per assembly	32	32
Fuel element pitch, in.	0.625	0.958
Assembly structural material	Zircaloy-2	S.S. Typer 348
Assembly can outside dimensions, in.	3.990 square	8.87 x 4.05
Can wall thickness, in.	0.086	0.032
Central moderator tube	Square	---
Moderator tube outside dimensions, in.	1.200 x 1.200	---
Moderator tube wall thickness, in.	0.030	---
Thermal insulation within assembly	---	Stagnant steam
Composition of pressure and coolant tubes	---	S.S. Type 348
Pressure tube OD, in.	---	0.833
Pressure tube ID, in.	---	0.797
Thickness of steam insulation annulus, in.	---	0.0315
Coolant tube OD, in.	---	0.734
Coolant tube ID, in.	---	0.710
Fuel clad OD, in.	0.500	0.536
Thickness of steam coolant annulus, in.	---	0.087

Fuel Element

Element type	Rod, segmented	Full length
Fuel type	UO_2 sintered pellets	UO_2 sintered pellets
Fuel elements per assembly	32	32
Fuel element pitch, in.	0.625	0.958
Total length of fuel, in.	54.0	54.6
Fuel length per rod segment, in.	27.0	54.6
Fuel clad material	Zircaloy-2	S.S. AISI Type 348
Fuel clad OD, in.	0.500	0.536
Fuel clad thickness, in.	0.025	0.018
Fuel-to-clad thermal bond	Helium	---
Thermal bond thickness, in.	0.005	---
UO_2 fuel pellet diameter, in.	0.445	0.500
Minimum number of fuel clad thermocouples	None	None
Minimum number fuel thermocouples	None	None

Control Rods and Rod Drive Mechanisms

	Core Regions	
	Boiler	Superheater
Number of control rods	9	8
Shape	Cruciform blade	Slab blade
Span, in.	7-3/4	14-1/4
Blade thickness, in.	0.125	0.125
Length of poison section, in.	62-3/8	62-3/8
Composition of poison section	1.09 wt.% enriched boron S.S. (92 wt.% B-10)	
Control rod channel width, in.	0.500	0.4375
Type of control rod drives	Rack and pinion, top-mounted, motor-operated	

Reactor Physics (Initial Core)

Maximum fuel burnup in boiler region	22,000 Mwd/ton U for max. point on max. rod; 12,900 Mwd/ton U for max. rod
Maximum fuel burnup, superheater region	20,000 Mwd/ton U for max. point on max. rod; 13,000 Mwd/ton U for max. rod.

	Boiler Region			Superheater Region
	New Core, No Xe&Sm	New Core, Equil.Xe&Sm	Partially Exposed core; Equil.Xe&Sm	Partially Exposed core; Equil.Xe&Sm
Total max/ave power ratio	3.60	2.82	3.33	2.90
Radial max/ave power ratio (including water channel effects)	1.59	1.59	1.88	1.612
Axial max/ave (control rods inserted to worst full-power operating condition)	2.26	1.77	1.77	1.80

Reactor Physics (Initial Core)

k_{eff} (540°F, equilibrium Xe and Sm, full power operation, control rods out)	1.015
k_{eff} (540°F, no Xe or Sm, full power operation, control rods out)	1.050
k_{eff} (equilibrium zero power operation, hot (540°F), superheater voided)	1.092
k_{eff} (equilibrium zero power operation, cold (68°F), superheater flooded)	1.164
Reactivity effects in hot reactor, Δk_{eff} due to:	
Doppler effect (full power)	-0.013
Steam in boiler (full power)	-0.033
Flooding of superheater	+0.0016
Xenon and Samarium (equil.)	-0.035
Reactivity effects in cold reactor, 68°F	
Doppler coefficient, $\Delta k_{eff}/°F$	-1.0×10^{-5}
Measured over-all core temperature coefficient when critical by withdrawal of corner rods, % $k_{eff}/°F$	-0.0035
Measured over-all core temperature coefficient when critical by withdrawal of blade rods, % $k_{eff}/°F$	-0.00061
Claculated over-all boiler region temperature coefficient of k_{∞}, unrodded core, % $k_{\infty}/°F$	+0.0053
Calculated boiler region coolant temperature coefficient of k_{∞}, unrodded core, % $k_{\infty}/°F$	-0.0091
Calculated boiler region coolant void coefficient of k_{∞}, unrodded core, % k_{∞}/% void	-0.023
Flooding of superheater, critical according to operating procedure, % k_{eff} due to total flooding	-0.303
Flooding of superheater, critical according to worst possible configuration, % k_{eff} due to total flooding	-0.636
Reactivity effects in hot reactor, 540°F	
Calculated over-all core temperature coefficient, unrodded core, % $k_{eff}/°F$	-0.03
Calculated over-all core void coefficient for voids in boiler region coolant, unrodded core, % k_{eff}/% void	-0.12
Flooding of superheater; critical on side-rod bank, all other rods out, % k_{eff} due to total flooding	-0.002

Reactor Physics (Initial Core) (Continued)

Flooding of superheater; center-rod in, critical on blade-rod bank, all other rods out, % k_{eff} due to total flooding	+0.005
Control rod effects, hot, 540°F	
Maximum worth of a single rod, % k_{eff}	1.9
Maximum differential worth of strongest single rod, % k_{eff}/in.	0.07
Shutdown margin, % k_{eff}	>9
Control rod effects, cold (68°F)	
All rods out, k_{eff}	1.164
All rods in, k_{eff}	0.970
Maximum worth of first rod withdrawn, % k_{eff}	1.5
Maximum worth of second* rod withdrawn, % k_{eff}	4.0
Maximum differential worth of second rod withdrawn*, % k_{eff}/in.	0.15
Maximum differential worth of a single rod in the allowed operating procedure, % k_{eff}/in.	0.056
Shutdown margin, % k_{eff}	3.0
Shutdown margin, number of rods	1 +
Shim effects	
Reactivity worth of shims, hot, control rods out, % k_{eff}	-9.2
Reactivity worth of shims, cold, control rods in, % k_{eff}	-3.6
Rate of reactivity change due to shim burnup, hot, % k_{eff}/full power day, averaged over first 2500 Mwd/ton	+0.009
Rate of reactivity change due to fuel burnup, hot, % k_{eff}/full power day, averaged over first 2500 Mwd/ton	-0.015
Reactivity worth of single most effective shim, cold, % k_{eff}	-0.22
Shutdown margins	
Shutdown margin, cold initial reactor, all rods in, % k_{eff}	3.0
Shutdown margin, cold initial reactor, all rods out, chemical poison in, % k_{eff}	5.2
Shutdown margin, hot, initial reactor (540°F, zero power), all rods in, % k_{eff}	9.0
Shutdown margin, cold, new reactor, no shims, control rods out, chemical poison in, % k_{eff}	1.6
Reactivity of cold, new reactor, with no shims, and with all control rods in, k_{eff}	1.006

Reactor Physics (Initial Core) (Continued)

Prompt neutron lifetime, sec	54×10^{-6} (hot); 48×10^{-6} (cold).
Effective delayed neutron fraction	0.00735
Characteristics after boiler shim removal, 5000 Mwd/ton boiler burnup	
Total max/ave power ratio	2.88
Radial max/ave power ratio	1.51
Axial max/ave (control rods inserted to worst full-power operating condition with equilibrium Xe and Sm)	1.91
k_{eff} (540°F, equilibrium Xe and Sm, full power operation, control rods out)	1.030
k_{eff} (540°F, no Xe or Sm, full power operation, control rods out)	1.065
k_{eff} (540°F, equilibrium zero power operation)	1.107
k_{eff} (cold, all rods in)	>0.970
Characteristics after first boiler fuel addition	
Total max/ave power ratio	>3.36
Radial max/ave power ratio	>1.76
Axial max/ave (control rods inserted to worst full-power operating conditions with equilibrium Xe and Sm)	1.91
k_{eff} (540°F, equilibrium Xe and Sm, full power operation, control rods out)	1.030
k_{eff} (540°F, no Xe or Sm, full power operation, control rods out)	1.065
k_{eff} (540°F, equilibrium zero power operation)	1.107
k_{eff} (cold, all rods in)	>0.970

Heat Transfer and Fluid Flow

	Core Regions	
	Boiler	Superheater
Net heat generation in fuel at 100% full power, Mw(t)	37.0	13.0
Heat loss to moderator by gamma and neutron radiation, Mw(t)	0.70	0.50
Heat transferred through fuel clad, Mw(t)	36.3	13.0
Insulation heat loss to moderator from coolant, Mw(t)	-	0.9
Net heat transferred to coolant, Mw(t)	38.4	11.6
Net heat transferred to moderator, Mw(t)	0.7	1.4

	Core Regions	
	Boiler	Superheater
Average specific power, Mw(t)/ton U element	13.2	7.25
Average region power density, Kw(t)/liter of region	33.6	11.5
Average heat flux, Btu/hr-ft^2	106,000	66,000
Maximum heat flux, Btu/hr-ft^2	367,000	201,000
Burnout heat flux, Btu/hr-ft^2	>750,000	-
Nominal operating pressure, psig	950 (exit)	950 (inlet)
Water saturation temperature, ^{o}F	540	540
Coolant exit temperature, ^{o}F	540	900
Coolant inlet temperature, ^{o}F	532	540
Feedwater temperature, ^{o}F	354	-
Inlet subcooling, ^{o}F	8	-
Inlet subcooling, Btu/lb	9.8	-
Steam flow from coolant channels, lb/hr	143,000	152,000
Water flow into coolant channels, lb/hr	3,226,000	-
Steam flow from moderator, lb/hr	9,000 (both regions)	
Total water flow to moderator, lb/hr	134,000 (both regions)	
Total water flow to reactor vessel, lb/hr	3,360,000 (both regions)	
Total water flow to reactor vessel, gpm	9,000 (both regions)	
Average inlet velocity in coolant channels, ft/sec	6.3 (water)	65.1 (steam)
Average exit velocity in coolant channels, ft/sec	10.8 (water)	122 (steam)
Maximum exit velocity in coolant channels, ft/sec	16.0 (water)	146 (steam)
Average upward saturated steam velocity in steam dome, fps	0.5	
Average downward water velocity in core region downcomer, fps	1.4	
Maximum fuel clad temperature, ^{o}F	650	1,175
Fuel clad melting point, ^{o}F	3,350	2,550
Maximum UO_2 fuel centerline temperature, ^{o}F	4140	3,160
Maximum UO_2 fuel surface temperature, ^{o}F^2	1,040	1,300
Average UO_2 fuel temperature over region, ^{o}F	1,200	1,400
UO_2 fuel melting point, ^{o}F	5,000	5,000
Fraction of total active coolant channel height in boiling	0.80	-
Fraction of water coolant channel volume in total region water	0.58	-
Average steam volume fraction in total water of region	0.147	-

	Core Region	
	Boiler	Superheater
Average steam volume fraction over total active height of coolant channels	0.23	-
Average steam volume fraction in boiling section of coolant channels	0.28	-
Average steam volume fraction at exit of coolant channels	0.420	-
Maximum steam volume fraction at exit of coolant channels	0.450	-
Average exit steam volume fraction in total water of region	0.290	-
Average steam quality at exit of coolant channels	0.0443	-
Minimum inlet operating pressure, psig	950	950
Region pressure drop, psi	8.4	79.3

Primary Coolant System

Type of primary coolant circulation	Forced circulation
Superheater region coolant	H_2O, steam from boiler region
Boiler region coolant	H_2O, saturated (540°F) recirculation water plus 354°F feedwater
Maximum total primary water flow to reactor vessel, gpm	9,000
Normal total primary water flow to reactor vessel, gpm	9,000
Recirculation flow, gpm	8,660
Feedwater flow, gpm	340
Number of primary flow loops	2
Number of pumps per flow loop	1
Total flow per loop, gpm	4,500
Minimum number of loops operating concurrently	2
Method of loop pressurization	Self-pressurized
Number of passes through core and flow direction through core	One, upward

Pressure Vessel

Vessel shape	Cylindrical
Vessel wall composition (base metal)	ASTM A 212 Gr B carbon steel
Vessel internal wall cladding	AISI Type 304 stainless steel

Pressure Vessel (Continued)

Vessel inside diameter, ft	7	
Vessel over-all height, ft-in.	26 - 7	
Vessel wall thickness (base metal), in.	3-1/8	
Vessel cladding thickness, in.	1/4	
Design pressure, psig	1150	
Design temperature, °F	600	
Operating pressure, psig	950	
Operating temperature, °F	540	
Internal thermal shield	AISI Type 304 stainless steel	
Internal thermal shield thickness, in.	1	
External thermal insulation	Fiberglass (integral with neutron shield tank)	
External thermal insulation thickness, in.	3	
Nozzle list		
Recirculating water inlet	1 - 16-in. Sch. 100	
Recirculating water outlets	2 - 12-in. Sch. 100	
Feedwater inlet	1 - 4-in. Sch. 80	
Large superheated steam outlets	7 - 3-in. Sch. 80	
Small superheated steam outlets	4 - 2-in. Sch. 160	
Control rod thimbles	17 - 3-in. Dbl. Ex. Hvy.	
Instrumentation thimbles	4 - 3-in. Dbl. Ex. Hvy.	
Pressure relief nozzle	1 - 6-in. Sch. 80	
Upper liquid level nozzle	1 - 2-in. Sch. 80S	
Lower liquid level nozzle	1 - 2-in. Sch. 80S	
Vent nozzle	1 - 1-in. Sch. 80S	
Emergency coolant inlet	1 - 2-in. Sch. 80S	
Gasket leak-off nozzle	2 - 1-in. Sch. 80S	
Spare nozzle	1 - 2-in. Sch. 80S	
Safety valve pressure settings and capacities, psig and lb/hr		
No. 1	1050	63,476
No. 2	1100	65,458
No. 3	1150	69,440
Relief PCV-10	975	76,000

Containment Building

Shape	Cylindrical steel shell, concrete wall, hemispherical steel dome, flat concrete floor slab
Over-all dimensions, ft-in.	166 - 8 diameter inside; 107 - 4 height inside.
Building height above ground, ft-in.	84 - 4
Concrete wall dimensions, in.	18 minimum thickness;
ft-in.	26 - 6 height.

Containment Building (Continued)

Dome diameter, ft-in.	166 - 8
Dome thickness, in.	5/16
Shell thickness, in.	13/32
Dome material	Carbon steel, ASTM A 201 Gr B
Design pressure, psig	5
Design temperature, ^{o}F	140
Free volume of containment barrier, ft^3	1.59×10^6
Maximum permissible total leakage rate	0.2% of contained air per day
Containment building penetrations	See Tables 905-1 and 905-2

Reactor Auxiliaries

Reactor water circulating pumps	
Number	2
Description	Vertical, single stage, single volute, centrifugal
Capacity, gpm	4500
Total head, ft	67
Motor, horsepower	75
Poison injection system	
Poison material	Boric acid
Concentration, wt.%	20
Solution volume, gal	114 at 193°F
System pressure, psig	Reactor vessel pressure
Injection time, min.	3

Emergency Condenser System

Design inlet conditions, psig-^{o}F	950 - 950
Maximum heat removal capacity, Mw(t)	2.1
Water storage for evaporation, lb	21,000
Cooling time available on stored water, hr	8

Reactor Purification System

Flow rate, gpm	15
Temperature of water leaving tube side of regenerative cooler, ^{o}F	180
Temperature of water leaving tube side of secondary cooler, ^{o}F	120
Description of filters	5 micron, wound, cellulose acetate
Description of ion exchange columns	Mixed bed Xe-150 (Rohm & Haas)
Resin bed volume, ft^3	7

Turbine

Number	1
Description	Single-casing ASME-AIEE Preferred Standard
Nameplate rating, kw	16,500
Turbine throttle conditions at full load	
Superheated steam weight flow, lb/hr	151,000
Pressure, psig	850
Temperature, ^{o}F	900
First extraction, psig-lb/hr	163 - 6734
Second extraction, psia-lb/hr	64 - 7312
Third extraction, psig-lb/hr	27.2 - 8251
Fourth extraction, psia-lb/hr	8.14 - 7703
Exhaust steam enthalpy, CEP, Btu/lb	1010.3
Exhaust steam weight flow, lb/hr	117,285

Generator

Number	1
Description	13,800-volt, 3ø, 60 cps, 3600 rpm ASME-AIEE Preferred Standard
Terminal output, kw	17,506
Capability at 0.85 pf and 30 psig H_2 pressure, Kva	22,059

Main Condenser

Number	1
Description	Two-pass, single shell, divided waterbox and hotwell
Heat transfer surface, ft^2	20,000
Capacity, lb/hr	119,000
Operating pressure with 85°F cooling water, in. Hg Abs.	2
Tube description	
Material	Aluminum-brass
Number	4368
Outside diameter, in.	7/8
Wall thickness, BWG	16
Effective length, ft	20
Cooling water flow rate, gpm	17,800
Cooling water temperature, inlet ^{o}F	85

Steam Jet Ejector

Number	1
Description	Twin element, two stage
Capacity, lb/hr	138
Steam consumption, lb/hr	450
Steam pressure to jets, psig	400

Condensate Purification System

Flow rate, gpm	310
Temperature of water entering system, ^{o}F	106-140
Description of filters	5 micron, wound cellulose acetate
Description of ion exchange columns	Mixed bed IR-120L-IRA-400
Resin bed depth, in.	45
Flow per unit area through bed, gpm/ft^2	30

Feedwater Heaters

Number	4
Description	Vertical U-tube with drain coolers
Operation conditions (approximate)	
Shell pressure and duty	
No. 1 heater, psia-Btu/hr	$7.57 - 10.5 \times 10^6$
No. 2 heater, psia-Btu/hr	$25.3 - 9.2 \times 10^6$
No. 3 heater, psia-Btu/hr	$59.5 - 7.9 \times 10^6$
No. 4 heater, psia-Btu/hr	$151.6 - 9.9 \times 10^6$

Condensate Pump

Number	2
Description	10-stage vertical turbine
Capacity, gpm	235
Total head, ft	490
Drive motor horsepower	50

Feedwater Pump

Number	2
Description	10-stage horizontal split case centrifugal
Capacity, gpm	195
Total head, ft	2520
Drive motor horsepower	200

Condenser Cooling Water Pumps

Number	2
Description	Vertical single-stage submerged-suction mixed flow
Capacity, gpm	9000
Total head, ft	38
Drive motor horsepower, Hp	125

300. REACTOR

301. REACTOR CORE

A. General

A perspective of the reactor and reactor vessel, showing the location of the core and vessel internals, is shown in Fig. 301-2. A vertical section through the reactor vessel is shown in Fig. 301-3.

The reactor core consists of two regions: a central boiler region with Zircaloy-2-clad UO_2 fuel and peripheral superheater region with stainless-steel-clad UO_2 fuel. The boiler region is made up of sixty-four assemblies arranged in an 8 x 8 in. square lattice. The superheater region is made up of thirty-two assemblies with eight assemblies located on each side of the boiler region. The center four boiler assemblies contain natural uranium; the remaining sixty are enriched to 2.4 wt.% U^{235}. All thirty-two superheater assemblies are enriched to 3.25 wt.% U^{235}. A total of 17 control rods are used in the core. Nine cruciform control rods (7-3/4 in. span by 1/8 in. thick) are located entirely within the boiler region, and an additional eight slab-type rods (14-1/4 in. span x 1/8 in. thick) are located between the two regions. The control rods are fabricated of 1.09 wt.% boron-stainless steel with the boron enriched to 92 per cent by weight of $boron^{10}$. A total of 59 fixed shim rods is provided in the boiler region to adjust the power distribution among the various assemblies and to help equalize burnup. Each enriched fuel assembly, with the exception of the assembly with the neutron startup source, contains a cruciform shim in the center moderator channel. A total of 52 fixed shim rods are evenly distributed in the area between the boiler and superheater regions to help maintain power distribution over the core lifetime and to flatten the power distribution in the superheater. Both sets of shims are adjusted as required during core lifetime to compensate for reactivity changes and burnup and ultimately will be removed completely.

Figure 301-1 is a schematic plan of the core showing over-all dimensions and lattice spacing. The boiler region is approximately 35 in. across flats and has an equivalent diameter of approximately 39-1/2 in. The entire core is approximately 55 in. across flats and has an equivalent diameter of approximately 58 in. The active core height is 54.6 in. A fuel assembly lattice spacing of 4.46 in. is used for the superheater region and 4.43 for the boiler region. The spacing between the boiler assembly boxes is 1/2 in. for channels containing control rods and 3/8 in. for the remaining channels. Boiler and superheater assemblies are positioned in place with locating devices as described in section 303.

Of the total reactor power of 50 Mw, the boiler region generates 37 Mw and the superheater region generates 13 Mw. A total of 1.4 Mw are transferred by the superheater to the surrounding moderator water

by gamma and neutron heating and by thermal exchange, resulting in a net power to the steam coolant of 11.6 Mw and in a net power to heat and boil water of 38.4 Mw.

The outlet superheated-steam temperature is determined by the distribution of power between the boiler and superheater regions. Power distribution is regulated during operation by manipulation of the slab control rods, which are located between the boiler and superheater regions. Because of the nuclear coupling between the boiler and superheater regions, there is some interaction between the two sets of rods, and adjustment of power level by use of the cruciform rods will require a readjustment of the slab rods.

B. Coolant Flow

Coolant flow to the boiler section of the core is by forced circulation. Water at 950 psig and 532°F is pumped into the core from the bottom. As the water rises through the boiler assemblies, it is heated to saturation (540.3°F) whereupon 142,770 lb/hr of steam is generated. Above the core, the steam is separated from the water, and the water flows radially outward and down between the reactor core and the pressure-vessel wall. Feedwater at 354°F is added to the saturated water as it descends in the vessel, subcooling the water to 532°F. Introduction of feedwater at this point reduces the chances of cavitation occurring in the outlet nozzles and adds to the net positive suction head of the pumps. The subcooled water leaves the vessel at the bottom through two 12-in. nozzles, and descends to the reactor water-circulation pumps, which are located in the pump room, under the vessel. From the water-circulation pumps, the water is returned through the 16-in. line to the reactor vessel.

Figure 301-4 is a reactor heat balance and coolant flow diagram. Total water flow to the reactor vessel is 9000 gal/min. Of this, 96 per cent flows through the coolant channels (inside the boiler fuel assembly shells), and the remaining 4 per cent flows to the moderator and control rod channels between the boiler fuel-assembly shells. Heat is transferred to the water in these channels by gamma and neutron heating, thus causing a small amount of steam generation. In addition to the gamma and neutron heating of the superheater moderator water, there is heat transferred from the hotter superheated steam to the saturated-water moderator across the insulating gap. Total steam generation in the coolant channels, in the boiler moderator and control-rod channels, and in the superheater moderator is 152,000 lb/hr.

The saturated steam rises from the boiler to the top of the vessel where it enters the dryer/preheater. The saturated-steam inlets are located near the uppermost point in the reactor steam dome to take advantage of the natural gravitational steam water separation effects at the low velocity (about 1/2 ft/sec) of steam rising in the vessel.

The dryers are similar in design and principle to those used in conventional steam-generating units. Low-velocity steam (about 2.5 ft/sec)

flows through corrugated plates, and moisture in the steam on contacting the plates adheres to the plates, separates from the steam, and drops back into the reactor vessel below the operating water level. The design of the dryers is such that the separated moisture cannot enter the lines to the superheater assemblies.

After leaving the dryer, the saturated steam flows through the preheater unit, which is a bank of tubes heated by superheated steam from the core exit. This preheats the incoming steam 2-1/2 degrees above saturation and insures that it is completely dry before it enters the superheater assemblies.

From the dryer/preheaters, the steam flows to the individual superheater assemblies. In the superheater assemblies, the steam flows downward in the inlet standpipes, makes four heating passes through the core, and flows upward in the outlet standpipes to the superheated-steam exit piping. Figure 301-5 is a horizontal cross section through the reactor pressure vessel showing the exit piping. A total of eleven outlet pipes carry the superheated steam from the vessel. Seven of these pipes are connected to manifolds, each of which serves four superheater assemblies. The flow in these pipes is monitored for flow rate and temperature. The remaining four pipes are connected directly to individual superheater assembly standpipes. This system allows individual monitoring of single assemblies in a one-eighth section of the symmetric core for flow, for radioactivity, and for temperature, and provides information on power shift with burnup in the superheater region.

Connections between the dryer/preheaters and the superheater assemblies, and connections between the superheater assemblies and the superheated-steam exit piping are made by a two-bolt clamp-type connector using an O-ring seal. These connections, which must be made after fuel handling, are located in the steam dome where they are readily accessible and where all sealing is in a steam atmosphere.

Orifices are provided in the superheated-steam outlet connections so the steam flow to each assembly will be proportional to the power generation in the assembly. By this method, the outlet steam temperatures from all assemblies will be approximately the same.

C. Core Performance

Thermal limitations on core performance in the boiler region are maximum fuel temperature, maximum surface heat flux, and exit core voids.

The maximum calculated temperature of UO_2 is 4140°F which is approximately 900°F below the melting point. Operation at 1.25 times normal power would have to occur before local melting would occur at the core hot-spot. All temperature calculations have been made using a

value of 1.20 for the thermal conductivity of UO_2 which is felt to be conservative.

The maximum surface heat flux in the BONUS core is 367,000 Btu/(hr)(sq ft). Although it is difficult to accurately predict burnout limits for boiling-water systems, even the most conservative correlations report burnout fluxes above 750,000 Btu/(hr)(sq ft), for the coolant conditions existing at the core exit. At the point of maximum heat flux, the steam quality will be much lower, as shown on Fig. 301-6, and therefore the burnout flux will be higher. It is expected that, in the core, the minimum ratio of burnout flux to operating flux will be in excess of 2 to 1.

All data presented for the boiler are based on the assumption that the most adverse possible combination of hot-channel factors occurs at the hot spot. The hot-channel factors for the boiler are listed in Table 301-1. The axial peak/average includes peaking due to shims and control rods, as well as that due to voids and to the normal axial power distribution. The radial peak/average includes effects of water channels. The axial power maximum occurs below the center of the reactor. Physics calculations indicate that at no time in the core life will the axial peak occur at the core midheight, thereby minimizing the effects of end cap peaking.

The average steam volume fraction in the core has been set at a value which will insure stable operation. It has been calculated to be 14.7 per cent, based on the total region water volume. The core is orificed to provide coolant flow to each assembly in proportion to its power, and therefore to provide an approximately uniform radial void distribution in the coolant channel. The coolant channel exit void content is nominally 42 per cent, but, because of orificing inaccuracies, may be locally as high as 46 per cent. This value is comparable to design values for other reactors, and it is below the limit at which hydraulic instability may be expected. Exit flow channel quality is 4.4%. Figure 301-6 is a plot of the axial steam void and quality distribution in a typical boiler assembly flow channel. The reactivity represented by steam voids in the core at full operating power is 3.3% ($\Delta k/k$), which is well within the range of stable operation.

Primary thermal limitations on the design of the superheater are maximum clad temperature and maximum fuel temperature. Clad temperature is limited by problems of strength and corrosion at elevated temperatures. Fuel temperature is limited to avoid fuel meltdown and the possibility of excessive clad temperature during coolant flow transients.

The superheater clad material selected for the BONUS is Type 348 stainless steel. Type 348 is columbium-stabilized to prevent carbide precipitation at high temperatures and thereby to avoid the possibility of intergranular corrosion. In addition, Type 348 stainless steel has an excellent combination of high-temperature strength, creep, and general corrosion resistance characteristics.

As is the boiler, the superheater is orificed to provide coolant flow to each assembly in proportion to its power. This will provide approximately uniform exit steam temperatures. The maximum clad temperature occurs in the highest power assembly since the gain due to the characteristic variation of convective film coefficient with reduced flow more than offsets the loss due to the higher radial peaking factors occurring in the lower power assemblies. Figure 301-7 is a diagram of the steam temperature in the hottest superheater assembly. The exit temperature from the assembly is slightly higher than 900°F to allow for losses in the outlet standpipes and external system.

Each assembly contains four flow passes through the core. The first pass is adjacent to the boiler region, and has the highest power density of the four. Therefore, the highest duty fuel rods are cooled by the coolest steam. The maximum clad temperature of 1175°F occurs in the final pass, whereas the highest local fuel temperature, 3160°F, occurs in the first pass. These temperatures are based on the most adverse possible combination of hot-channel factors. The hot-channel factors for the superheater are listed in Table 301-2. Under "nominal" conditions the clad temperature is calculated to be 1086°F.

Table 301-1 PEAKING FACTORS USED IN CALCULATION OF BOILER FUEL TEMPERATURES

Radial peak/average	1.88
Axial peak/average	1.77
Mechanical peak/average	1.04
Over-all peak/average	3.46

Table 301-2 PEAKING FACTORS USED IN CALCULATION OF SUPERHEATER FUEL TEMPERATURES

Radial peak/average	1.61
Axial peak/average	1.80
Mechanical peak/average	1.05
Total	3.04

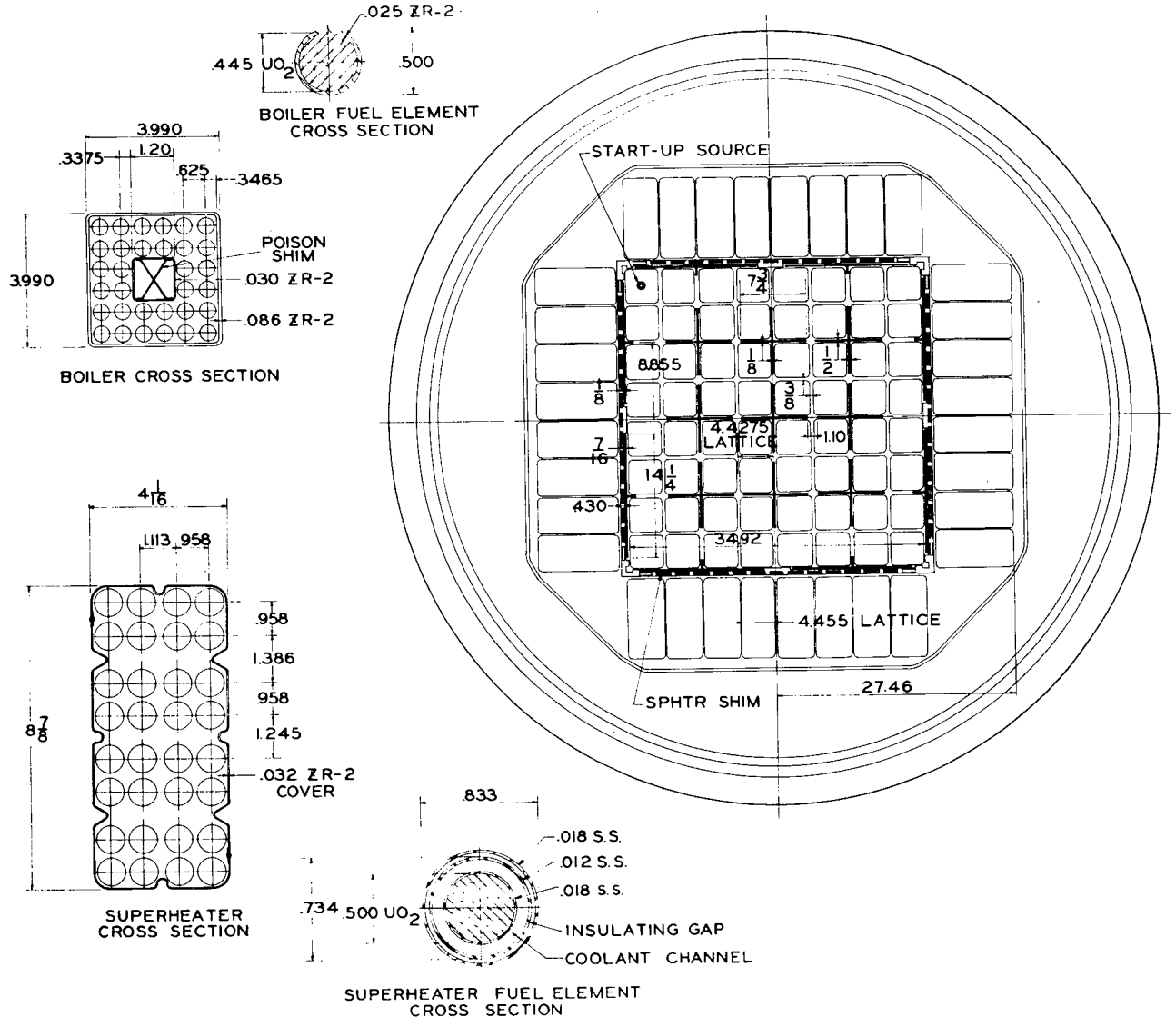

Fig. 301-1 Horizontal cross section of core

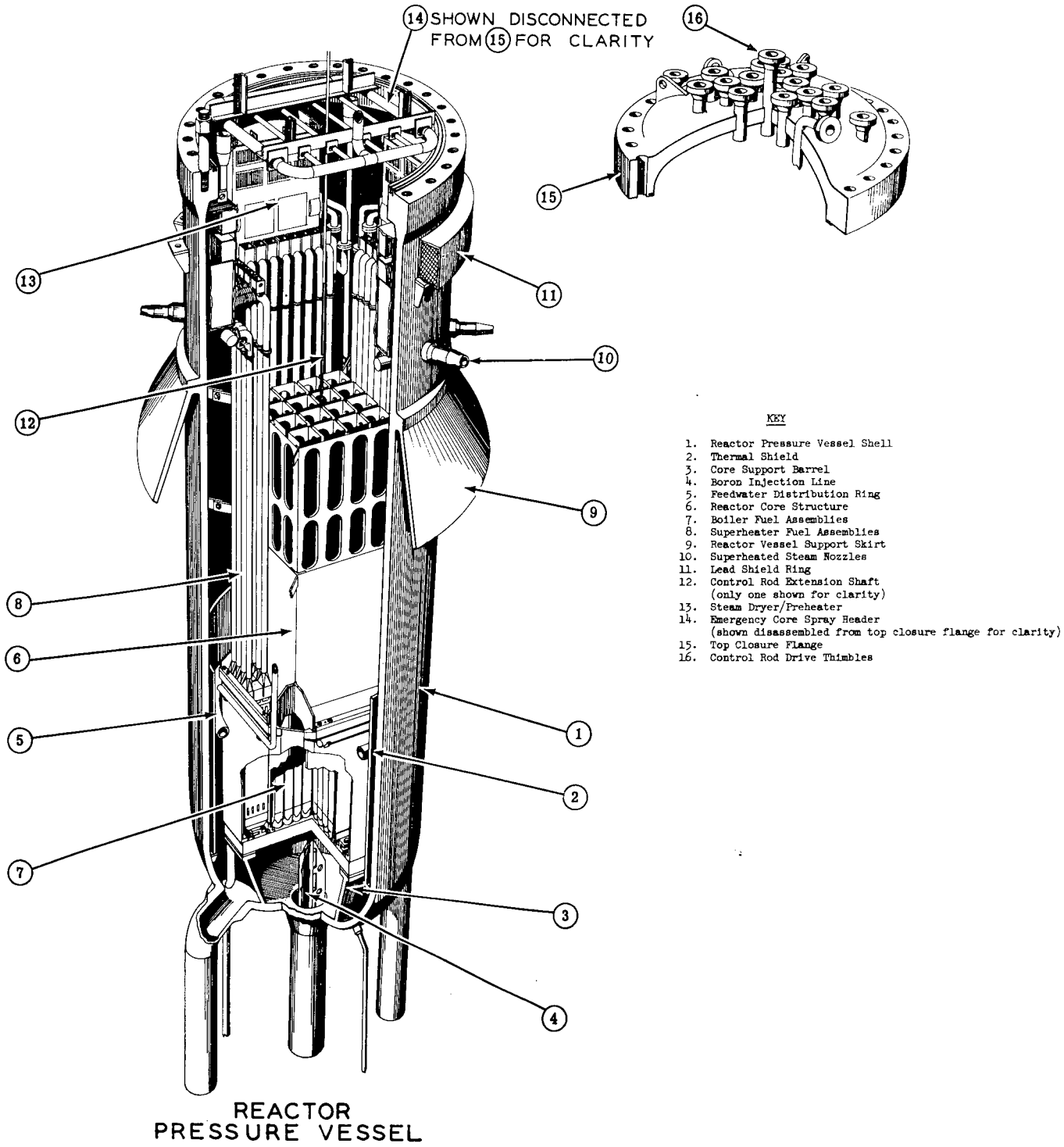

KEY

1. Reactor Pressure Vessel Shell
2. Thermal Shield
3. Core Support Barrel
4. Boron Injection Line
5. Feedwater Distribution Ring
6. Reactor Core Structure
7. Boiler Fuel Assemblies
8. Superheater Fuel Assemblies
9. Reactor Vessel Support Skirt
10. Superheated Steam Nozzles
11. Lead Shield Ring
12. Control Rod Extension Shaft (only one shown for clarity)
13. Steam Dryer/Preheater
14. Emergency Core Spray Header (shown disassembled from top closure flange for clarity)
15. Top Closure Flange
16. Control Rod Drive Thimbles

Fig. 301-2 Perspective view of reactor vessel and internals.

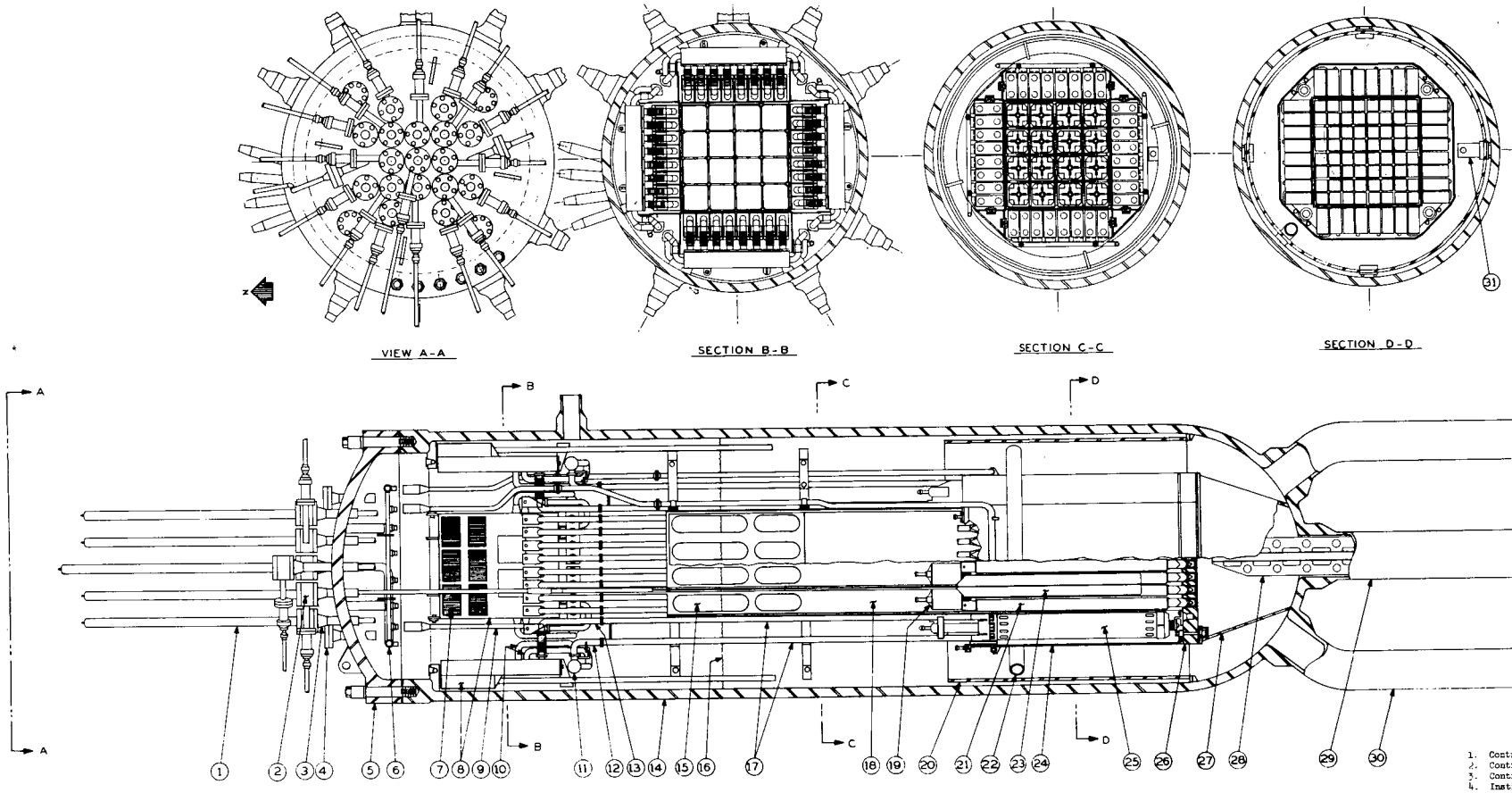

KEY

1. Control Rod Drive Housing
2. Control Rod Actuator Assembly (17 total)
3. Control Rod Thimble
4. Instrument Thimble (4 total)
5. Closure Head
6. Boiler Spray Header
7. Saturated Steam Inlet to Dryer/Preheater
8. Dryer/Preheater
9. Superheater Emergency Coolant Pipe
10. Steam Preheater Piping
11. Superheater Steam Outlet Header
12. Superheater Fuel Assembly Outlet Connector Pipe
13. Superheater Fuel Assembly Inlet Connector Pipe
14. Reactor Vessel
15. Recirculating Water Opening
16. Operating Water Level
17. Superheater Fuel Assembly Standpipes
18. Rod Guide Structure
19. Boiler Fuel Holddown Assembly
20. Thermal Shield
21. Boiler Fuel Assembly
22. Feedwater Spray Ring
23. Cruciform Control Rod
24. Baffle Support
25. Superheater Fuel Assembly
26. Core Plate
27. Core Support Barrel
28. Boron Injection Pipe
29. Recirculating Water Inlet
30. Recirculating Water Outlet
31. Charpy Impact Holder

Fig. 301-3 Vertical cross section of the reactor vessel.

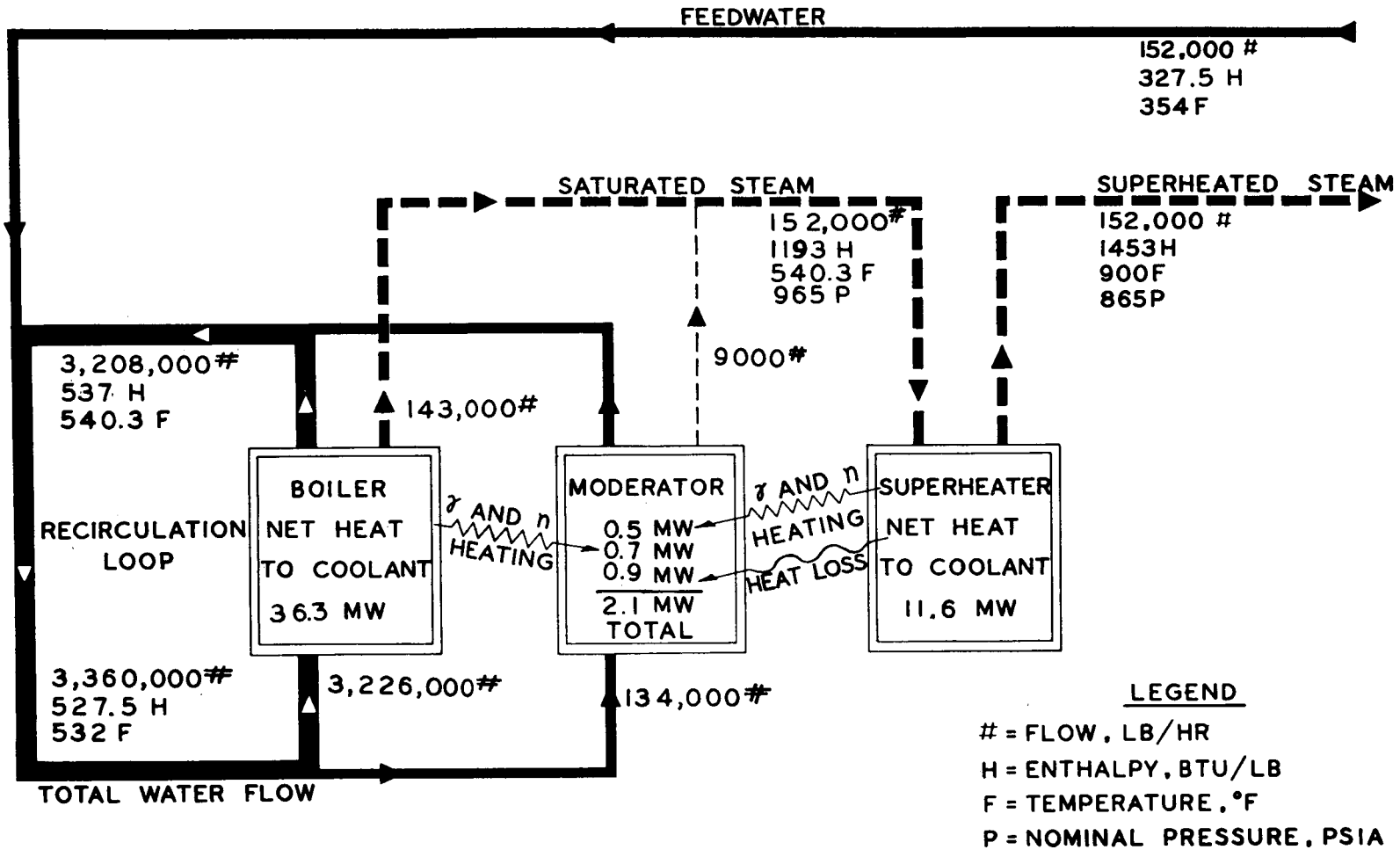

Fig. 301-4 Reactor heat balance.

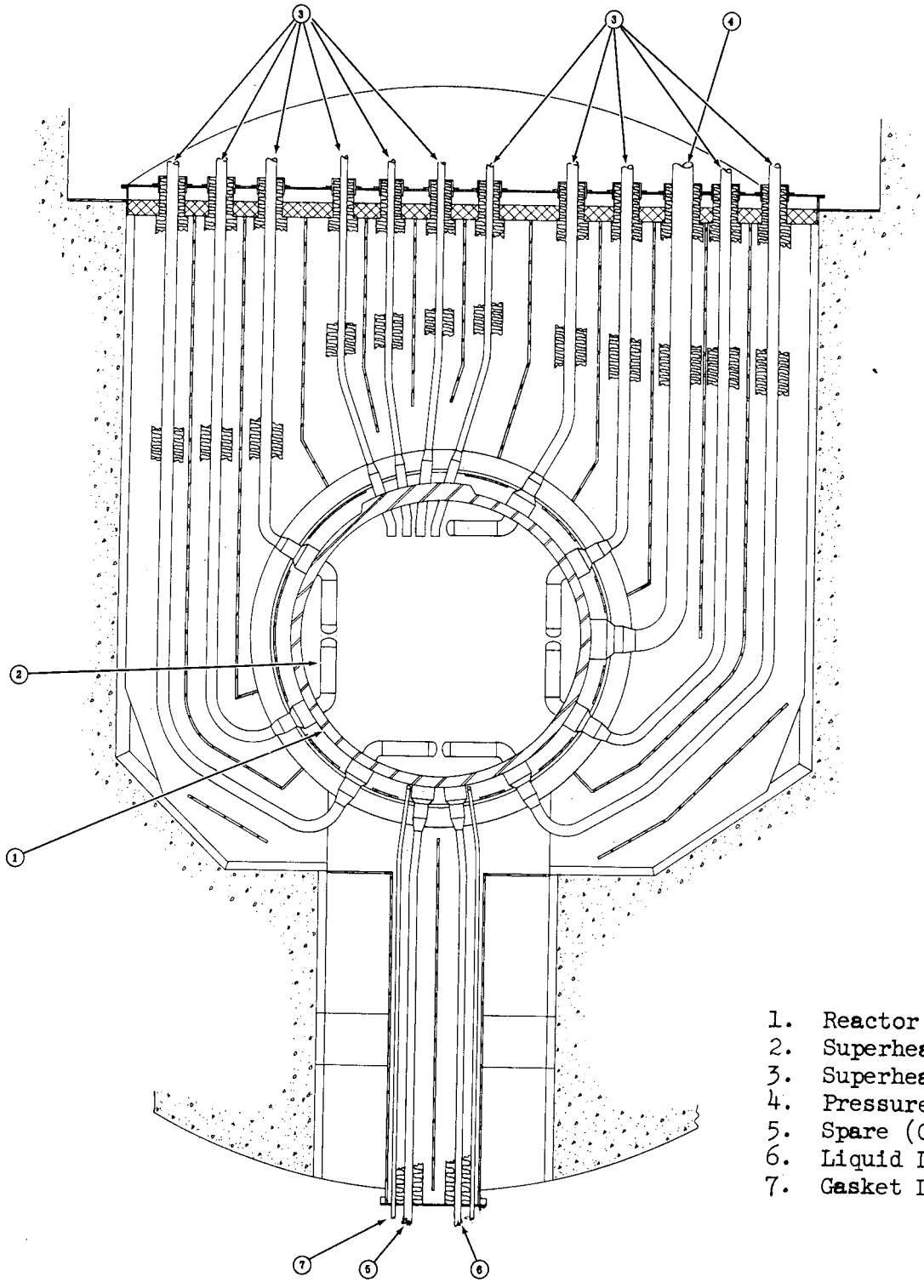

Fig. 301-5 Horizontal cross section through the reactor pressure vessel, showing the exit piping.

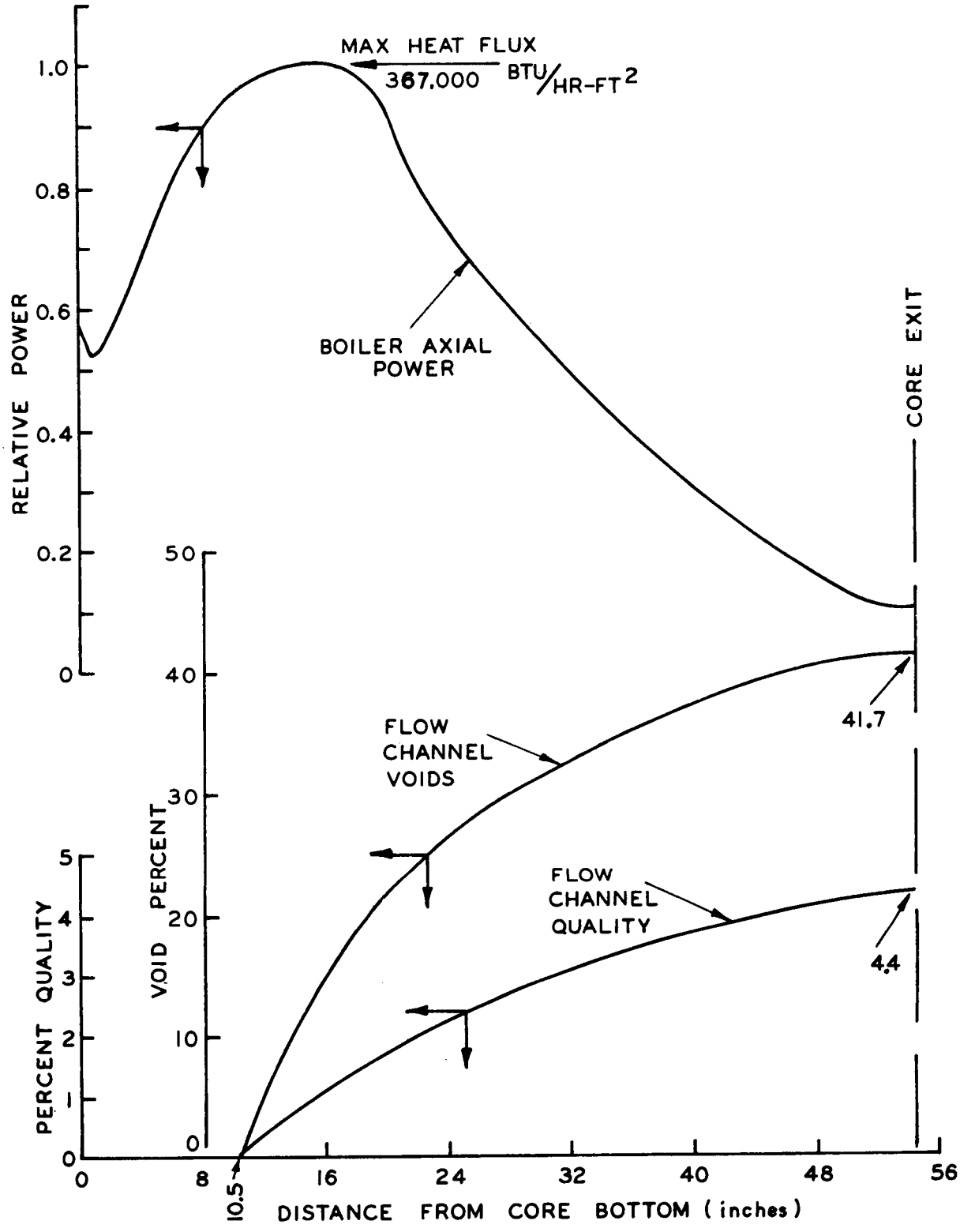

Fig. 301-6 Boiler axial power, steam void and steam quality distribution.

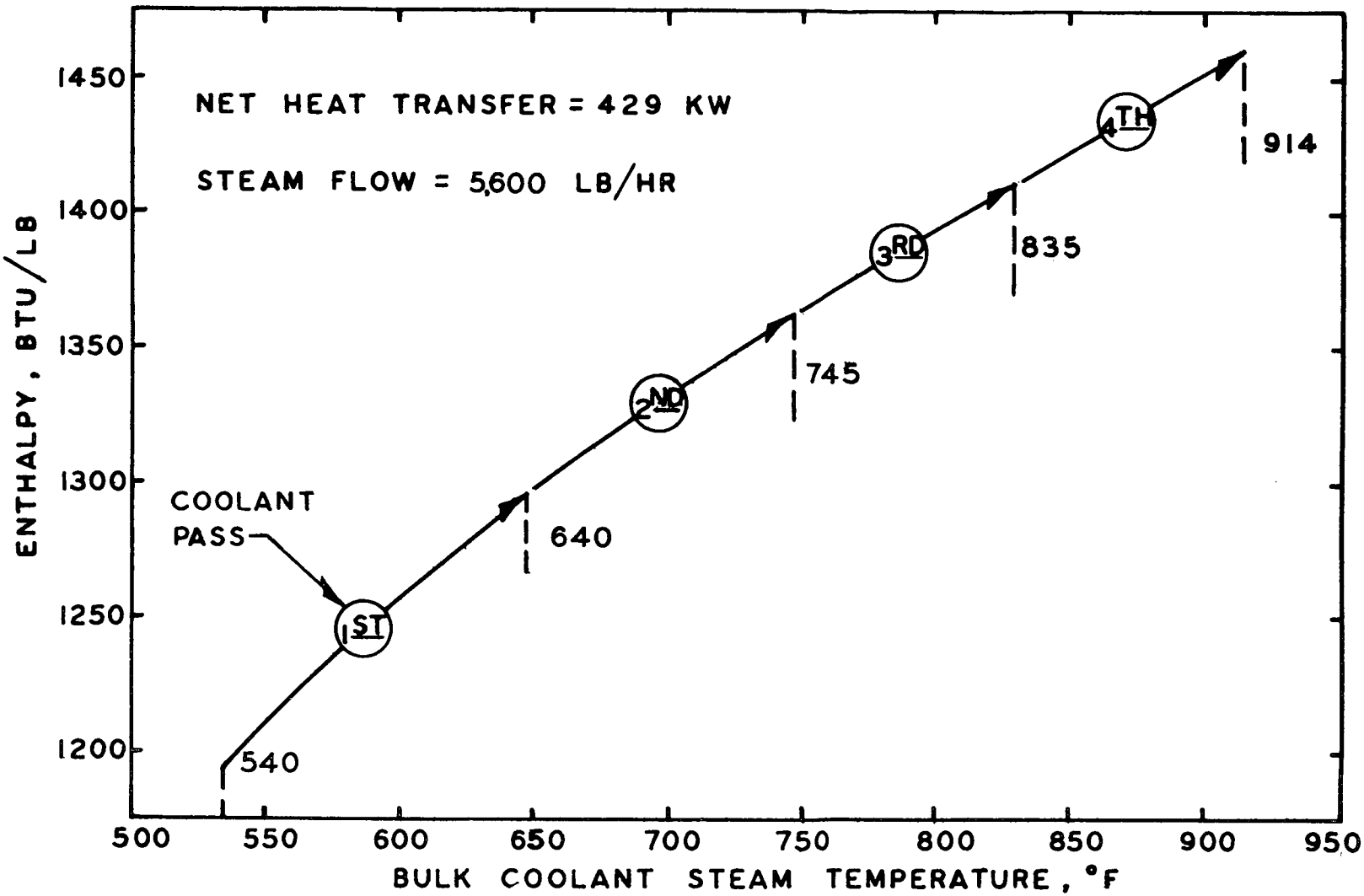

Fig. 301-7 Enthalpy and temperature of steam passing through hottest superheater assembly.

302. FUEL ASSEMBLIES

A. Boiler Zone

1. Boiler Fuel Assembly

The boiler zone consists of four natural (.71 wt.% U^{235}), UO_2 boiler fuel assemblies surrounded by sixty enriched (2.4 wt.% U^{235}), UO_2 boiler fuel assemblies. The natural and enriched assemblies are identical in construction except that the enriched assemblies have a short length of cored pellets at the midheight of each outside corner rod position. A perspective and a cross section of an enriched assembly is shown in Fig. 302-1.

Each boiler fuel assembly consists of an upper and lower fuel bundle, an outer Zircaloy shell, and upper and lower stainless-steel end fittings. Each fuel bundle consists of thirty-two Zircaloy-2 clad fuel rods, an inner Zircaloy-2 shell, and the inner and outer Zircaloy-2 grid plates. In addition, each lower fuel bundle contains a flow orifice plate welded to the lower end of the inner shell. The fuel-bundle array of thirty-two fuel rods is on a 0.625-in. square pitch and is formed by removing the four center fuel rods from a square lattice of thirty-six rods (6 x 6). The central region thus formed in each boiler fuel assembly contains space in which are located burnable poison shims.

The over-all dimensions of the boiler fuel assembly are 3.990 inches square with an over-all length of 80-1/8 inches, including end pieces. A single assembly weighs 158 pounds, 100 pounds of which is UO_2 compacts.

2. Fuel Bundle and Outer Shell

Each natural fuel bundle contains thirty-two solid-compact fuel rods; each enriched fuel bundle contains twenty-eight solid-compact fuel rods plus four special fuel rods located at each outer corner of the fuel lattice. The special fuel rods contain a 1.5 to 2.0 inch length of cored compacts at the core midheight. The thirty-two fuel rods in each bundle are held in place between the inner and outer grid plates as shown on Fig. 302-2. The inner grid is .125-in.-thick; the outer .375-in.-thick. The fuel rods are fusion-welded to the inner grid plate and are guided at the opposite end by an extension stem on the fuel-rod end cap which passes through a slip-fit hole in the outer grid plate. The slip fit permits relative motion between rod and grid to accommodate thermal expansion. The inner and outer grid plates are welded to the ends of the inner shell to form a rigid structure. The inner shell is a 1.20-inch square box with a 0.030-in.-thick wall. This box serves as a flow barrier between the assembly coolant channels and the moderator water in the center of the assembly. The lower enriched

fuel bundle has a 1/8-in.-thick orifice plate with a 3/16-inch drilled hole to control coolant flow to the central moderator region. Flow is required in this region to reduce bubble formation induced by gamma and neutron heating of the moderator.

The assembled bundles are stacked within the outer shell so that the inner grid plates butt together at the midplane of the core. The assembly results in a non-active height at the core midplane of 0.625 inch due to the location of the fuel rod end caps. Each bundle is plug-welded to the outer shell at each peripheral lug of both grid plates. The outer shell, shown in Fig. 302-3, is a 65-1/4-inch long tubular structure of square cross section with inside dimensions of 3.840 inch and a 0.086-inch wall. The outer shell is designed to withstand a pressure differential of 10 psi without exceeding two-thirds of the yield stress at operating temperature. This pressure force results in a 0.007-in. maximum outward deflection of the wall.

The inner shell is designed to withstand a pressure differential of 10 psi without exceeding two-thirds of yield at operating temperature. The higher pressure outside the inner shell will produce a negligible deflection of the inner-shell wall. The inner shell operates at the same temperature as the outer shell, so no stresses will be induced due to relative thermal expansion.

3. Fuel Rods

Each boiler fuel rod (see Fig. 302-4) consists of UO_2 sintered compacts, in the form of right-circular, cylinders 0.445 $\pm$ 0.0005 inch in diameter, stacked within a 0.500-in.-OD, 0.025-in.-wall, Zircaloy-2 clad tube. The fuel rod has an active length of 27 inches and an over-all length including end caps of 30-5/16 inches. A 2-in. space is provided at the outer end of each rod for the accumulation of fission gases. An Inconel-X spring with compression limited to 1.456 in. is located in the gas space to prevent shifting of fuel and to hold the fuel compact against the inner end of the fuel rod when the rod is in an inverted position. In this way, the gas space is either at the upper or lower core boundary and is never at the core center. A 0.062-in. thick perforated stainless steel disc (fuel stack spacer) imparts the spring load uniformly to the fuel, and also allows fission gases to enter the void space without permitting fragments of fuel to drop into this area.

The terminal face of the compact is perpendicular to the outside surface within 0.005 in. total indicated runout; terminal face flatness is within 0.003 in. The compact length is 0.455 in. minimum and 1.000 in. maximum except that one special length compact is allowed to meet stack length tolerances. The bulk density of the fuel compacts is 95 $\pm$ 1 per cent of theoretical density (10.96 g/cm^3). The natural boiler fuel-rod compacts contain 0.714 per cent (natural) U^{235}, and the enriched boiler fuel-rod compacts contain 2.40 $\pm$ 0.068 per cent U^{235}. The compacts contain a minimum 88 per cent by weight of uranium, and the atomic ratio of oxygen-to-uranium is within the range of 2.00 to 2.04.

The fuel clad tube has a nominal OD of 0.500 in., an ID of 0.4505 ± 0.0015 in., and a wall thickness of 0.0235 to 0.0275 inch. The tube length is 29.312 in. End caps of Zircaloy-2 are fusion-welded to the ends of the clad tube to retain the fuel compacts in place and to allow for attachment to the grid plates. The tube is evacuated and filled with high-purity helium before the second end cap is welded into place in a hermetically sealed chamber. Welds are checked by radiographic inspection and by a helium leak test to insure integrity. The clad tube wall is designed to withstand an external pressure of 1000 psi without exceeding two-thirds of the yield stress at operating temperature. The internal gas space is sized to accommodate fission-gas release of 30 per cent at 15,000 Mwd/ton without exceeding a pressure of 1350 psi at operating temperature. The gas space has a normal length of 2.000 in. in the cold condition, but closes to approximately 1.650 in. in the operating condition due to thermal expansion of the fuel compacts relative to the clad. Allowances have been made for the volume occupied by the inner spring. The Inconel-X spring is designed to exert a force in excess of four times the weight of a fuel stack under all operating conditions.

4. Upper and Lower End-Fittings

The upper and lower end-fittings are riveted to the respective ends of the outer shell. The end-fittings are shown in Fig. 302-3. The stainless-steel upper end-fitting serves as the fuel handling fitting and also serves to guide and position the boiler fuel assembly against the control-rod guide structure. The stainless-steel lower end-fitting serves to seat the fuel assembly in the reactor grid plate and to seal against leakage flow around the assembly. The locating guide is welded to the lower end of the lower end-fitting.

B. Superheater Zone

1. General

The superheater zone consists of thirty-two assemblies in four separate rectangular regions, one region being located on each side of the square boiler region. A perspective view of one of the 32 superheater fuel assemblies, coupling components, and connector piping is shown in Fig. 302-5. The saturated steam from the boiler region is supplied to the superheater through the inlet connector pipe after having passed through a steam-moisture separating system to which the inlet connector is coupled. The steam travels downward through the inlet standpipe of the superheater fuel assembly, enters the fuel region, in which it makes four passes, then exits through the outlet standpipe of the superheater fuel assembly and the outlet connector pipe to a superheater steam manifold header which is an integral part of the reactor vessel. Each assembly is arranged with four coolant passes in series with eight parallel elements per pass. The multipass system provides a high mass velocity for effective cooling without requiring excessively restricted passages. Since the quantity of steam coolant available is limited by

the evaporation rate in the boiler, which in turn is determined by the fixed steam conditions and power level, four passes are required to achieve the desired mass velocity. The passes are arranged to take advantage of the power drop-off radially from the core center by orienting the assemblies so that the first pass, which contains the coolest steam, is operating at the highest power. As the coolant heats up, it is required to remove comparatively less heat. This characteristic approaches an optimum condition thermally for a surface temperature-limited core.

Because of the presence of high-temperature steam in the superheater fuel assemblies and connector piping, it is necessary to provide thermal insulation in all areas of the assembly in order to reduce the transfer of heat to the relatively low-temperature moderator water and saturated steam in which the assemblies are immersed. It is for this reason that all boundaries between the steam and the moderator are double-walled, with the space between containing a stagnant layer of insulating steam. The only exception is the inlet connector pipe which never comes into contact with superheated steam. This insulating feature also serves to maintain the external barrier, which in all cases is the structural member, at essentially the moderator temperature. This uniformity of temperature reduces concern over thermal stresses.

In order to accommodate thermal expansion, the superheater is supported by suspension from the outlet steam header with the load carried through the rigid outlet connector pipe. During operation approximately 78% of the load on the steam header is taken up by the Inconel-X spring located in the lower end-fitting. The bellows in the inlet connector pipe takes up the tolerances between the connector pipes and the vessel components and allows the inlet connection to be made more easily. The superheater fuel assemblies are positioned laterally against the outer baffle of the control-rod guide structure by deflecting the standpipe.

The basic material of construction in the superheater assembly is stainless steel Type 348 modified to limit cobalt, tantalum and boron content to lower levels than the normal limits. Columbium stabilized Type 348 was selected because it has a lower rate of generalized corrosion, has good high temperature strength and creep characteristics and, in addition, provides protection against intergranular corrosion which is a potential problem at the temperature levels expected in this core.

2. Superheater Fuel Assembly

The superheater fuel assembly consists of two standpipe subassemblies welded to the fuel subassembly as shown on Fig. 302-6. After welding to the fuel subassembly, the two standpipes are joined together by welding of the upper tie bar and lower tie bar to achieve the alignments.

a. Standpipe Subassembly

Each standpipe subassembly, (Fig. 302-7) consists of the standpipe tube, the standpipe liner, the liner shield sleeve, the standpipe shield sleeve, the standpipe flange, the spiral shield plug, the support ring, the liner spacer rings, and the dowel pins. Inconel is used for the standpipe tubes to eliminate concern about stress corrosion at the steam-water line interface where chloride buildup is a possibility. The spiral shield plug is supported within the 1.604 ID, .042-thick-wall liner tube by plug welds at the center position. Backup support is provided at both ends by the use of dowel pins welded to the liner tube and projected into slotted holes on the edges of the spiral plug. The support ring, and the liner shield sleeve are welded to the liner. The spacer rings are brazed onto the liner. The standpipe shield sleeve is fitted over the liner and is captured between the support spacer and the adjacent spacer ring. The liner shield subassembly is inserted into the 1.865 in. ID, 0.65-in.-thick-wall standpipe tube and is plug-welded at the support ring. The spiral shield plug and shield sleeves are required to reduce streaming of neutrons and gamma rays to the vessel head since the standpipe flow passage and annular insulation gap is void of moderator water during operation. Liner spacer rings are provided to center the standpipe liner within the standpipe tube.

b. Fuel Subassembly

The fuel subassembly (Fig. 302-8) consists of 32-fuel-rod-and-coolant-tube subassemblies, the shell subassembly, the inlet-outlet transition pieces and liners, the upper and lower cross-over box covers and liners, the lower end-fitting, and the Zircaloy protective shroud. The shell subassembly forms the basic structure for the fuel assembly, and provides a pressure barrier between the moderator and the lower-pressure superheated steam. The Zircaloy protective shroud serves the purpose of preventing damage to the pressure tubes during handling and also serves as a water displacer which reduces local power peaking during operation. Since the pressure-tube wall thickness has been minimized for nuclear reasons, it is important to prevent any damage which may impair the ability of these tubes to withstand the external pressure to which they may be subjected during certain reactor transients.

The fuel-rod and coolant-tube subassemblies are inserted into the pressure tubes of the shell subassembly, and are edge-welded at the upper support cap (see Fig. 302-9). The resulting space between the coolant and pressure tube forms an insulating gap of stagnant steam, which prevents excessive loss of heat from the high-temperature steam to the cooler moderator. The annular space between the fuel rod and coolant tube forms the steam coolant flow channel in which heat transfer to the steam takes place.

The liners serve the purpose of directing the steam flow between passes and forming the insulating gap. The upper cross-over liner is

located within the center plenum of the upper tube sheet and is positioned over the sixteen center pressure tubes. The upper cross-over liner is held in position by a pin at the bottom, by the tight fit over the pressure tubes, and by a stem at the top which is welded to the upper cross-over plate. The lower cross-over liners are located within the plenums of the lower tube sheet and are positioned over the outer sixteen coolant tubes of each plenum. Each lower cross-over liner is held in position by a pin at the top, by six pads along the sides which fit tightly against the plenum wall, and by a stem at the bottom which welds to the lower cross-over cover. After the liners are located within their respective plenums, the cross-over box covers are welded to the shell assembly to provide a pressure barrier between the superheater steam and the moderator. The inlet-outlet liners are located within the outer plenums of the upper tube sheet and are positioned over the outer eight pressure tubes. Each inlet-outlet liner is held in position by a pin at the bottom, by the tight fit over the pressure tubes, and by being edge-welded at the top to the inlet-outlet transition piece. The inlet-outlet transition piece provides the transition from the inlet-outlet plenums of the upper tube sheet to the standpipes.

The lower end-fitting locates and seats the assembly within the core structure. The guide spring minimizes the load that must be carried at the top support, and takes up the thermal expansion of the fuel assembly relative to the pressure vessel.

c. The fuel Rod and Coolant Tube Subassembly

The fuel rod (Fig. 302-10) and the coolant tube (Fig. 302-10) are welded together at the upper end cap of the fuel rod to form the fuel rod and coolant tube subassembly (see Fig. 302-9). Each coolant tube is 0.710 $\pm$ 0.001 in. ID, with a maximum ovality of 0.003 in. and has an 0.012 $\pm$ 0.001-in. wall. The coolant tubes are designed, on the minimum wall thickness with 0.003 in. corrosion allowance, to resist a collapse pressure differential of about 65 psi. Five coolant-tube spacer rings are brazed onto the outer surface of the coolant tube and maintain the insulating gap between the coolant and pressure tube, as well as providing spring action to reduce flow-induced vibration. The coolant-tube spacer rings are 0.833 in. OD with a 0.0235-in.-wall and are 3/8 in. wide. The rings have a 1/4-in. segment removed to provide the spring action when compressed within the pressure tube.

The fuel rod consists of the clad tube, fuel compacts, end cap, support cap internal spacer, fuel disc, vent plugs, and the clad tube spacer rings. Space has been provided at each end of the fuel rod to accumulate gases generated as a result of the fission process. The internal gas space is sized to accommodate fission-gas release of 20 per cent at 15,000 Mwd/ton without exceeding a pressure of 900 psi at operating temperature. These spaces are supported against external pressure by the end caps and by the internal spacer. A small region of the fission-gas space is not provided with internal support in order to allow for any relative axial expansion which may occur between the clad

and the fuel. This space is supported externally by brazing a clad tube spacer ring at this location. The perforated fuel disc is required to allow free movement of fission gas into the space provided without allowing large pieces of fuel to drop into this area. The clad tube spacer rings maintain the annular coolant channel required for steam flow and fuel cooling. Since the clad coolant and pressure tubes will all operate at different temperatures, the design allows for relative axial growth by welding these components together only at the top end allowing freedom of movement in the downward direction from this fixed point. Since the tubes will slide relative to each other during temperature changes, the contact surfaces of all spacers are designed to be smooth and free of any defects which may interfere with free relative motion.

The sintered UO_2 compacts are in the form of solid right-circular cylinders of 0.5000 $\pm$ 0.0005 in. dia. with dished ends to accommodate relative expansion between the fuel compacts and the clad tubing. The compact length is 0.5000 in. minimum and 1.000 in. maximum except that the outside face of one compact, at the stack ends, is undished if required to meet stack length tolerances. The terminal face perpendicularity conforms to a runout of less than 0.002 in. The bulk density of the fuel compacts is 95 $\pm$ 1 per cent of theoretical density for uranium dioxide bodies based upon a theoretical density of 10.96 g/cm^3. The U^{235} enrichment is 3.25 $\pm$ 0.068 per cent. The compacts contain a minimum of 88 per cent by weight of uranium, and the atomic ratio of oxygen-to-uranium is within the range of 2.00 to 2.04.

The fuel cladding is a stainless steel tube 0.506 $\pm$ 0.002 in. ID with a 0.018 $\pm$ 0.001-in. wall. Because of nuclear requirements the wall thickness of the clad tube has been minimized and is not self-supporting under long term creep against external pressure at reactor temperature. To insure uniform closure of the assembly clearance between the clad and internal fuel rod components the clad is collapsed under controlled conditions during fabrication. The collapsing of the clad tube onto the fuel compacts is outlined in the GNEC Report 197, "Development of the BONUS Type Superheater Fuel Assembly." The internal spacer is designed to provide positioning for the fuel, to provide a fission-gas space, and to support the clad tube. The fuel disc allows fission gases to enter the void space without permitting fragments of fuel to enter. The stainless-steel support cap and end cap are fusion-welded by the inert-gas tungsten arc process to each end of the clad tube to retain the fuel compacts, the fuel disc, and the internal spacer in place and to provide a leak-proof closure. The internal helium atmosphere of the fuel rod is obtained by forcing helium through the vent holes located in the support and end cap; vent holes are then plugged and welded in a hermetically sealed gas chamber filled with helium. The support cap is designed to provide support and centering of the fuel rod and the coolant tube subassembly by a flange-like extension. The support cap also provides a fission-gas space. Both the support cap and the end cap are rounded to reduce transition losses at the coolant channel entrance and exit. The clad tube spacer rings are brazed onto the clad tube to provide centering between the fuel rod and coolant tube.

d. Shell Subassembly

The superheater shell subassembly consists of the upper tube sheet and lower tube sheet, the pressure tube, the pressure-tube ferrule, and the emergency cooling pan brazed together as one integral part as shown in Fig. 302-11. The upper tube sheet and the lower tube sheet are shown on Fig. 302-11. The walls and covers of the tube sheets are designed to withstand the external pressures imposed during steady state and transient operation without exceeding two-thirds of the yield stress at operating temperature. Moderator cooling is provided between tube-sheet plenums by a series of drilled holes in the tube sheet plates to allow free circulation.

The pressure tubes provide the main assembly structure between the upper and lower tube sheet, and form a barrier between the water moderator and the superheated steam. A pressure differential between the moderator water and the superheater steam, exerts an external pressure on the pressure tube. The pressure tubes have a 0.833 $\pm$ .001-in. OD, a maximum ovality of 0.003 in., and a 0.018 $\pm$ 0.001-in. wall. The critical collapsing pressure for these tubes, using a 0.014-in. minimum wall at the end of life, is approximately 260 psi. This collapsing pressure provides a safety factor of 2.4. The pressure-tube .015 in. wall ferrules, 16 in number, are 0.521 in. OD, 3/4 in. long and are located at two levels; the upper bank of ferrules are 19-13/16 in. below the top tube sheet and the lower bank of ferrules are 20-3/16 in. below the upper bank. Pressure-tube ferrules are located as shown on Fig. 302-11 and are required for lateral support of the pressure tubes against vibration.

3. Coupling Components

The upper coupling assemblies and the lower coupling assemblies are shown in Fig. 302-5. These assemblies provide the flow connection between the superheater assemblies and the external steam system. Each of the two upper coupling assemblies must be disconnected whenever a fuel assembly is moved from its position; the lower coupling assemblies must be disconnected only when a superheater orientation, as related to the core, is reversed, in which case the inlet and outlet connector pipes are interchanged. The coupling assemblies are shown in Fig. 302-12. The standpipe flanges are shown on Fig. 302-7 and the connector pipe flanges are shown on Fig. 302-13. These flanges are welded to and become a permanent part of the piping. The stainless-steel Type 347 coupling clamp is designed to transmit a load onto the stainless-steel Type 321 silver plated O-ring gasket by way of the flanges. The load is supplied by two Haynes-25 bolts and two stainless-steel nuts which are captured within clips welded to the ends of the clamps. For installation and removal of the clamp, the top clip is designed to accept a tool with an Allen-type wrench. This clip also serves as a locking device by clamping the upper surface into slots located in the head of the bolts. The bottom clip serves to capture the nut, prevent rotation, and provide the break-away action for separating half of the clamp. The clamps are provided with stainless-steel pins which ride in slots provided in the extension from the connector pipe flanges. These extensions on the

flanges also provide the break-away action for the second half of the clamp, and are used to support the clamp during travel. The cotter keys are used to fasten the clamp to the extension of the flange.

4. Connector Pipe Subassemblies

The inlet and outlet connector pipe subassemblies, as shown in Fig. 302-13, are required for joining the standpipes to the steam dryer system and to the reactor outlet steam manifold system, respectively. The connector pipes are separate pieces from the standpipe because of the requirement of reversibility of the superheater assemblies in their positions. The connector pipes must be interchangeable with both standpipes of all superheater fuel assemblies. The outlet connector pipe subassembly consists of the outer tubing with hanger, gusset, liner, and upper and lower connector flanges. The connector tubing is 1.865 in. ID with a 0.065-in.-wall thickness and the elbow is 2.000 in. OD with a .075-in.-wall thickness. The liner tubing is 1.605 in. ID with a 0.042-in.-wall thickness, and the liner elbow is 1.688 in. OD with a 0.042-in.-wall. The liner is supported within the outer tubing by a spacer ring which is welded to both members. The liner is also guided within the outer tubing by spacer rings located at the ends of the outer tubing. These rings are welded only to the outer tubing. This arrangement provides space for a stagnant layer of insulating steam, and space for thermal expansion between the liner and the outer tubing. The flanges are welded at the end of the outer tubing to provide the necessary surfaces for coupling. The hanger and gusset are located as shown in Fig. 302-13 and provide a positioning function to facilitate mating of the coupling flanges.

The inlet connector pipe subassembly consists of an outer tube, an elbow, a bellows, a handling fitting, an upper flange, and a lower flange. No insulating liner is provided, since only saturated steam is handled. The tubing is 1.865 in. ID with 0.065-in.-wall and the elbow is 2.000 in. OD with a 0.075-in.-wall. The bellows is located in the horizontal leg of the connector pipe subassembly and is for the purpose of taking up tolerances between the connector pipes and vessel components thereby facilitating the connection of the inlet pipe. The bellows is 2.450 in. OD, 1.980 in. ID, with a 0.012-in.-thick wall, and consists of 45 convolutions. The handling fitting is welded to the elbow and is designed to accept the same handling tool used for boiler fuel assemblies. The centerline of the handling fitting is located approximately along the same line as that of the superheater fuel assembly and connector piping.

5. Superheater Orifices and Nozzles

The superheater inlet nozzles (Fig. 302-14) provide the connection between the superheater inlet connector pipe subassemblies and the steam dryer/preheater. The nozzle female flange mates with the inlet connector pipe flange and the nozzle screw end mates with the steam dryer fitting. The nozzle is field welded to the steam dryer around the

circumference of the nozzle hub. The nozzle is fabricated from austenitic stainless steel, Type 348, modified by restricting the cobalt content to less than 0.2 per cent.

The superheater outlet nozzle (Fig. 302-14) provides the connection between the superheater outlet connector pipe subassemblies and the superheater outlet header located on the reactor vessel (see Fig. 302-15). The nozzle female flange mates with the outlet connector pipe flange and the nozzle male flange mates with the outlet header nozzle. The superheater outlet nozzle is connected to the outlet header nozzle by two cap screws. The superheater outlet nozzle also serves to house the superheater orifice, and to position the superheater fuel assembly. The nozzle is fabricated from austenitic stainless steel Type 348 modified by the restriction of cobalt content to less than 0.2 per cent.

There are seven types of superheater orifices as shown in Fig. 302-15. The orifices are housed within the superheater outlet nozzles and distribute the steam flow to each superheater fuel assembly proportional to the power output of that assembly. The hottest assembly in each bank of four assemblies is not orificed. The adjacent assembly contains a single orifice plate, the next contains three orifice plates in series and the corner assembly, which is the coolest and requires the least flow, contains five orifice plates in series. Because of power symmetry, the orifice plate arrangement will be identical in each of the seven groups in which the four assemblies are connected to a common exit steam header. The four assemblies with individual outlet connections have slightly different pressure drop characteristics because of differences in piping arrangements external to the pressure vessel. For this reason, the orifice plates are slightly modified in hole diameter to make up for this difference. In addition, the hottest assembly in this group requires a small orifice to balance its flow with that of the other hot assemblies which operate at the same power level. Each orifice is positioned within the superheater outlet nozzle, see Fig. 302-16 by four integral leaf springs at one end and a spherical seat at the other. During operation the pressure loading on the orifices provides the force required to maintain a seal at the orifice spherical seating surface against the conical sealing surface of the outlet nozzle liner to prevent bypass flow around the orifice plates. Rotation of the orifice is prevented by a pin in one leg of the orifice leaf spring positioned in a slot in the outlet nozzle liner. The orifices are fabricated from austenitic stainless steel Type 348 modified by restricting the cobalt content to less than 0.2 per cent.

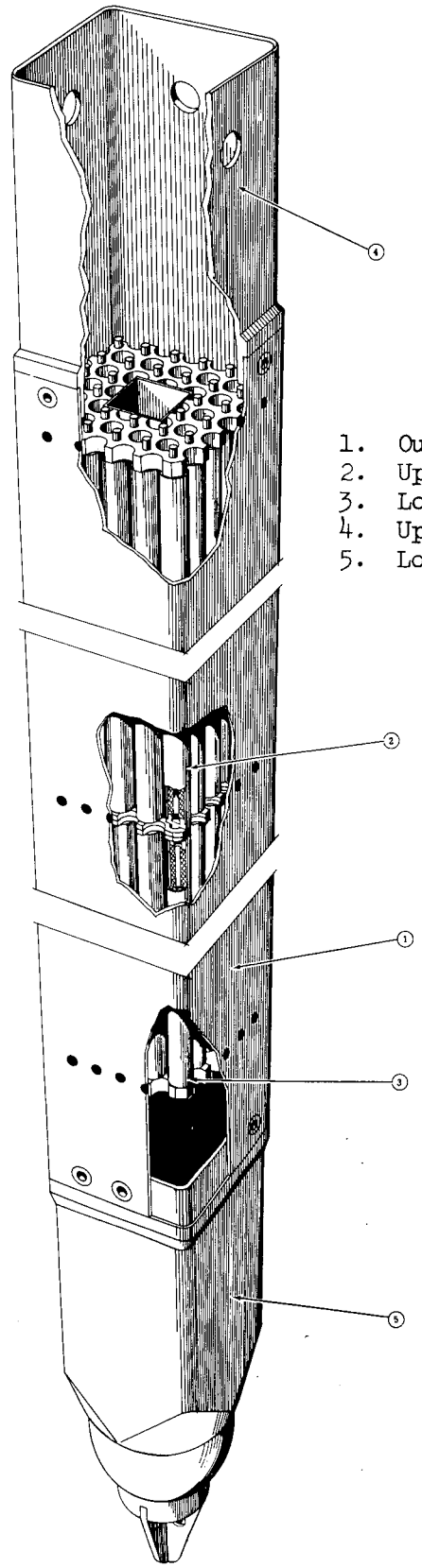

KEY

1. Outer Shell
2. Upper Enriched Fuel Bundle Subassembly
3. Lower Enriched Fuel Bundle Subassembly
4. Upper End Fitting
5. Lower End Fitting

Ref. Dwg. GNEC 66-M-34 CFC

Fig. 302-1 Perspective drawing of enriched boiler fuel assembly.

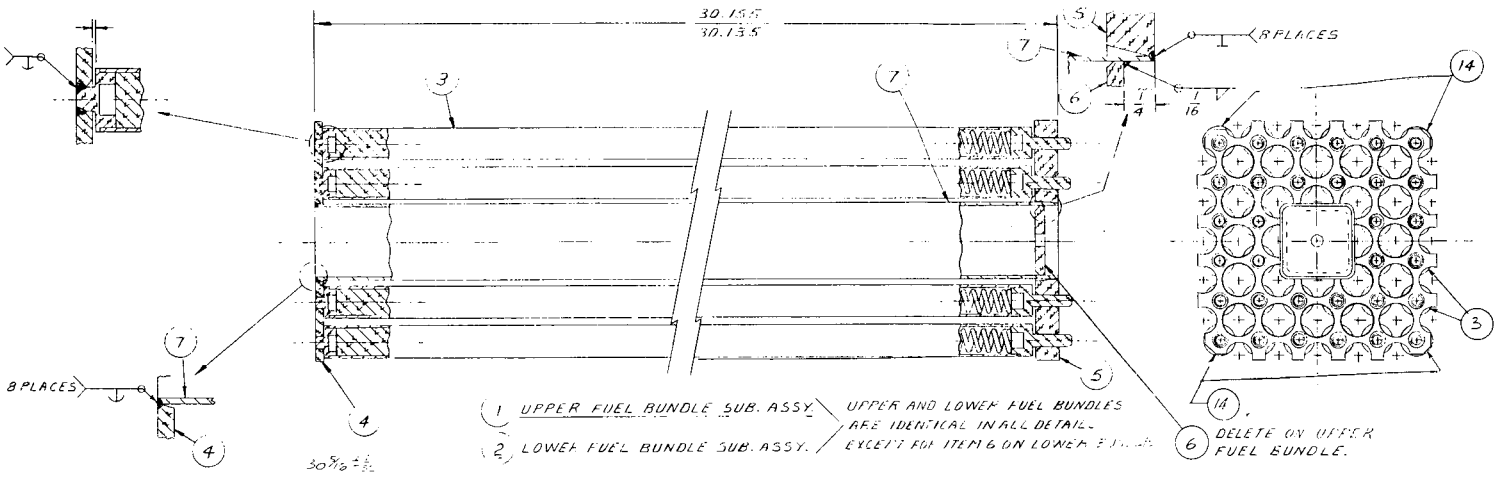

KEY

1. Upper Enriched Fuel Bundle Subassembly
2. Lower Enriched Fuel Bundle Subassembly
3. Enriched Fuel Rod Subassembly
4. Inner Grid
5. Outer Grid
6. Orifice Plate
7. Inner Shell
14. Special Fuel Rod Subassembly

Ref. Dwg. GNEC 66-M-32 Rev. 3

Fig. 302-2 Upper and lower enriched fuel-bundle subassembly.

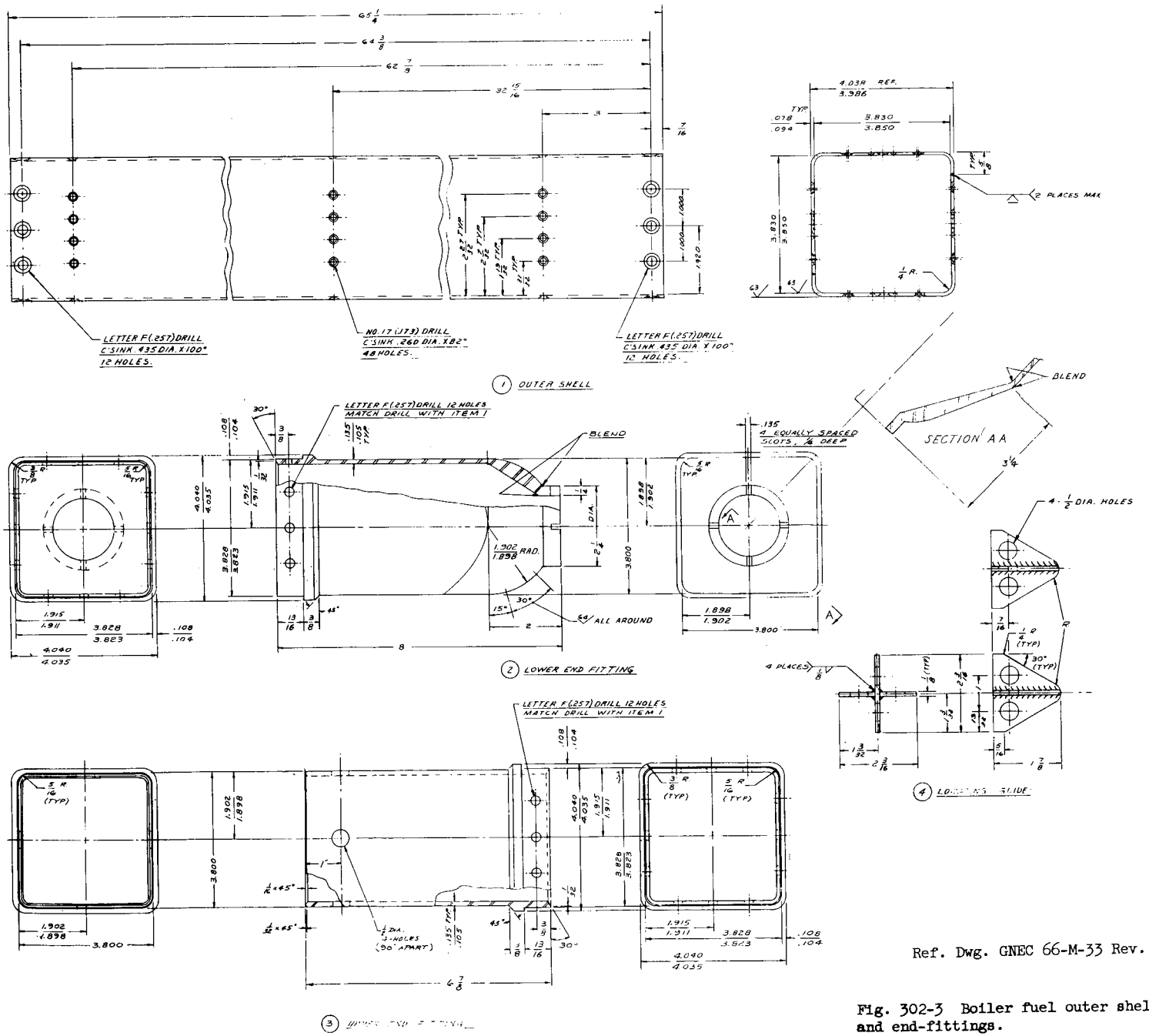

Ref. Dwg. GNEC 66-M-33 Rev. 3

Fig. 302-3 Boiler fuel outer shell and end-fittings.

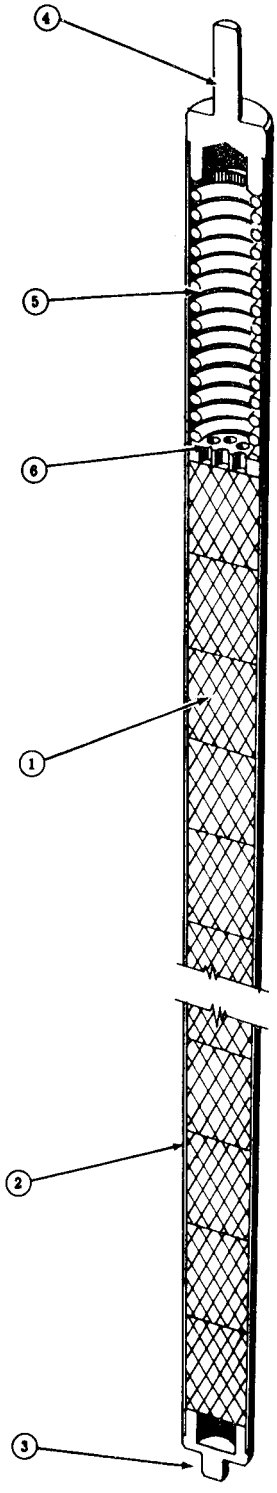

KEY

1. UO_2 Fuel Compact
2. Clad Tube
3. Inner End Cap
4. Outer End Cap
5. Spring
6. Fuel Stack Spacer

Ref. Dwg. GNEC 66-M-34 CFC

Fig. 302-4 Perspective drawing of a natural or enriched fuel rod.

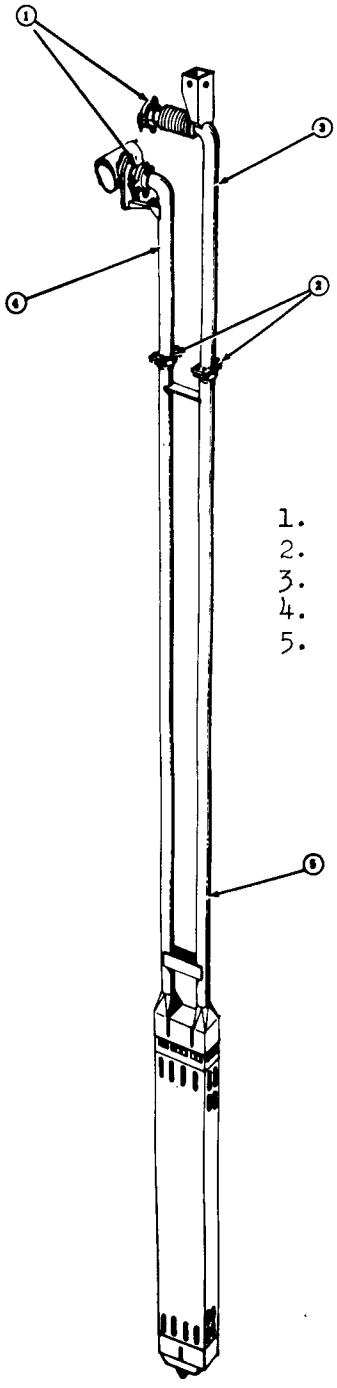

KEY

1. Upper Coupling Assembly
2. Lower Coupling Assembly
3. Inlet Connector Pipe Subassembly
4. Outlet Connector Pipe Subassembly
5. Superheater Fuel Assembly

Fig. 302-5 Superheater fuel assembly, connector piping, and coupling components.

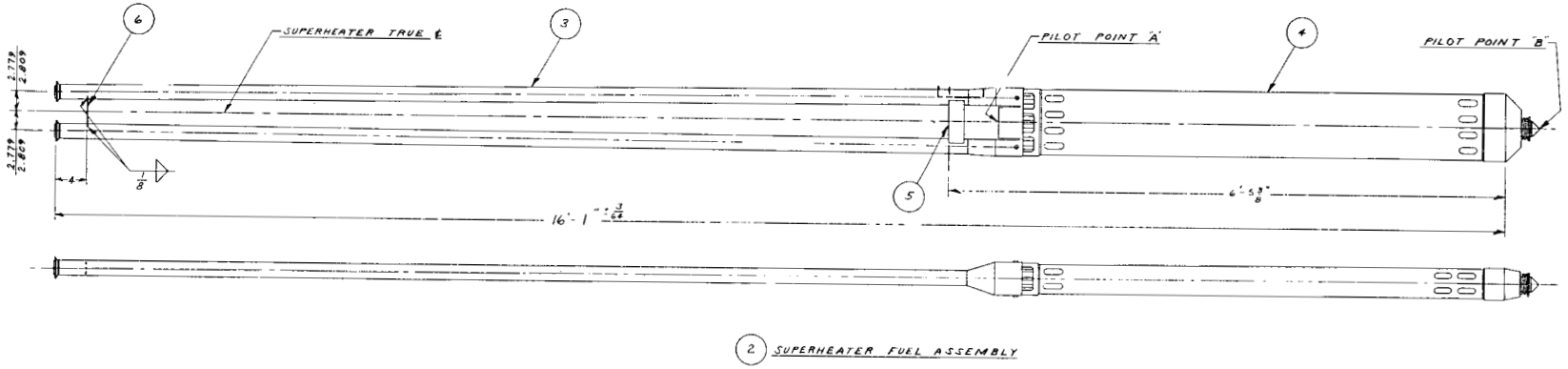

KEY

2. Superheater Fuel Assembly
3. Standpipe Subassembly
4. Fuel Subassembly
5. Lower Tie Bar
6. Upper Tie Bar and Name Plate

Ref. Dwg. GNEC 66-M-40 Rev. 2

Fig. 302-6 Superheater fuel assembly.

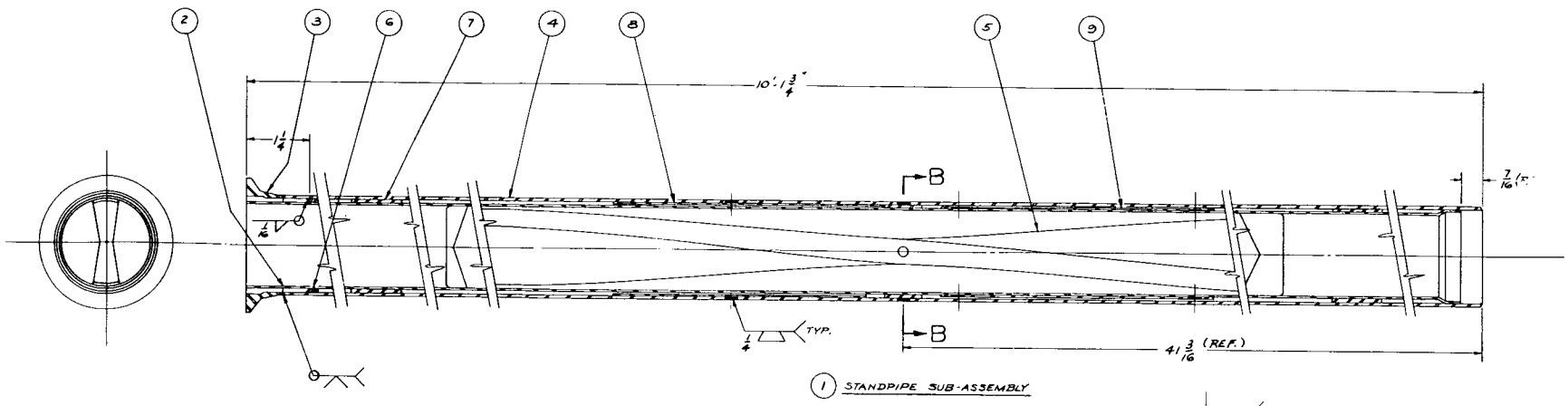

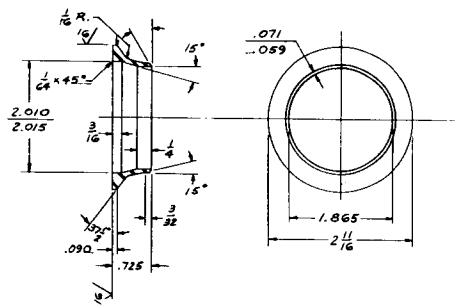

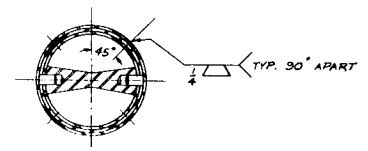

REF. DWG. GNEC. 66-M-43 REV.-2

KEY

1. Standpipe Subassembly
2. Standpipe Liner
3. Standpipe Flange
4. Standpipe Tube
5. Spiral Shield Plug
6. Support Ring
7. Spacer Ring
8. Standpipe Shield Sleeve
9. Liner Shield Sleeve

Ref. Dwg. GNEC 66-M-43 Rev. 2

Fig. 302-7 Standpipe Subassembly.

KEY

1. Fuel Rod and Coolant Tube Subassemblies
2. Shell Subassembly
3. Inlet-Outlet Transition Piece
4. Inlet-Outlet Transition Liner
5. Upper Crossover Box Cover
6. Upper Crossover Flow Liner
7. Lower Crossover Box Cover
8. Lower Crossover Flow Liner
9. Fuel Assembly Guide
10. Protective Shroud
11. Guide Washer
12. Guide Spring
13. Guide Sleeve
14. Sleeve End

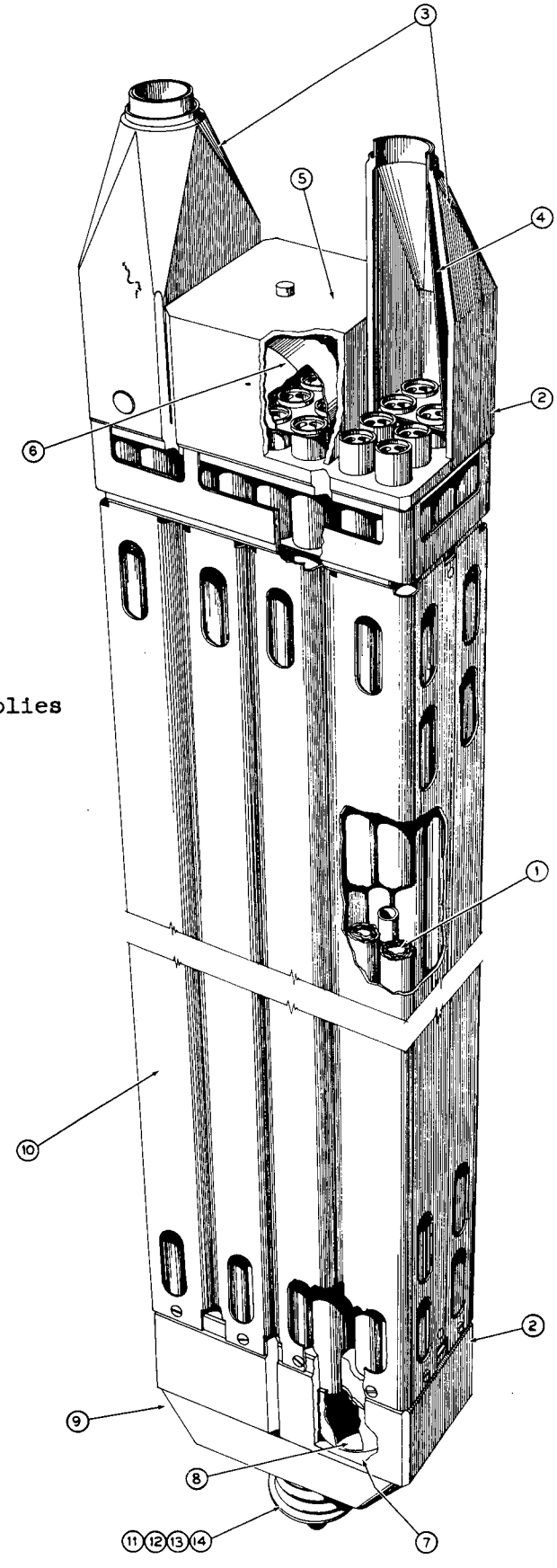

Ref. Dwg. GNEC 66-M-39 CFC

Fig. 302-8 Perspective drawing of superheater fuel assembly.

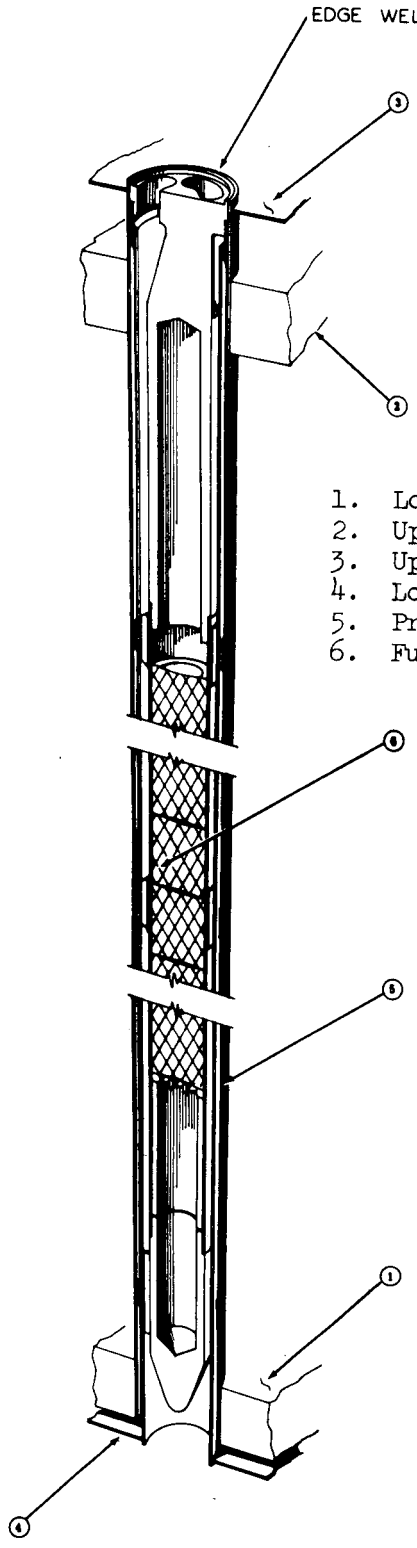

KEY

1. Lower Tube Sheet
2. Upper Tube Sheet
3. Upper Crossover Flow Liner
4. Lower Crossover Flow Liner
5. Pressure Tube
6. Fuel Rod and Coolant Tube Subassembly

Ref. Dwg. GNEC 66-M-39 CFC

Fig. 302-9 Perspective drawing of fuel-rod and coolant-tube subassembly.

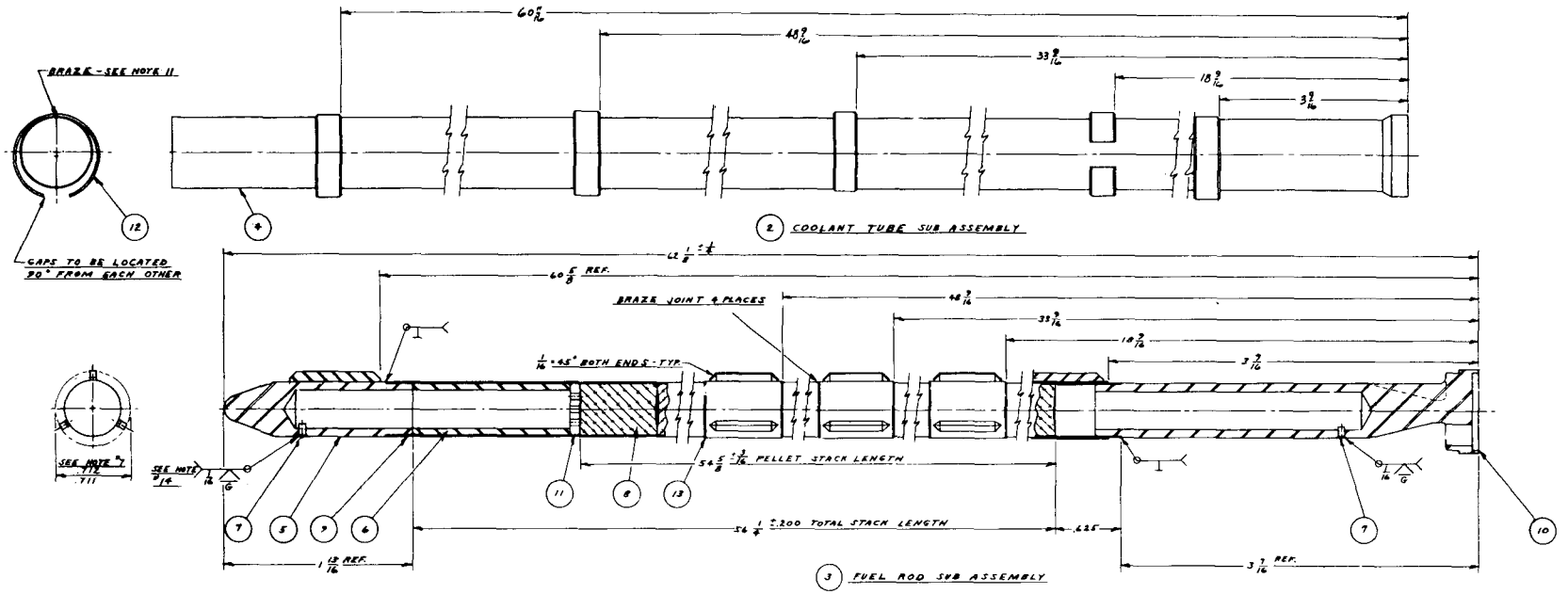

KEY

2. Coolant Tube Subassembly
3. Fuel Rod Subassembly
4. Coolant Tube
5. End Cap
6. Internal Spacer
7. Vent Plug
8. Fuel Compacts
9. Clad Tube
10. Support Cap
11. Fuel Disc
12. Coolant Tube Spacer Ring
13. Clad Tube Spacer Ring

Ref. Dwg. GNEC 66-M-46 Rev. 2

Fig. 302-10 The fuel rod and the coolant tube.

KEY

1. Superheater Shell Assembly
2. Upper Tube Sheet
3. Lower Tube Sheet
4. Pressure Tube
5. Pressure Tube Ferrule
6. Emergency Coolant Pan

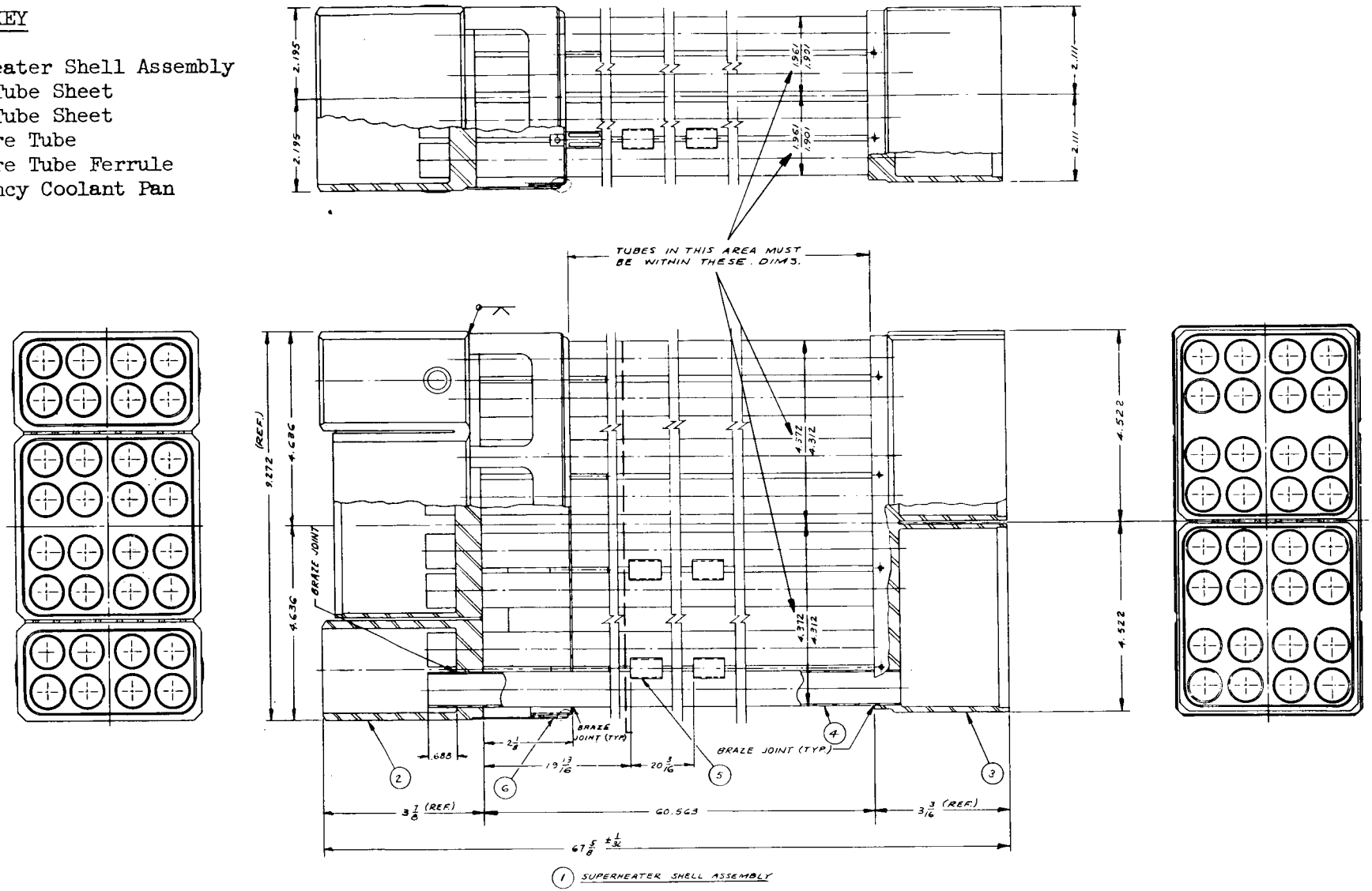

Ref. Dwg. GNEC 66-M-45 Rev. 2

Fig. 302-11 Shell assembly.

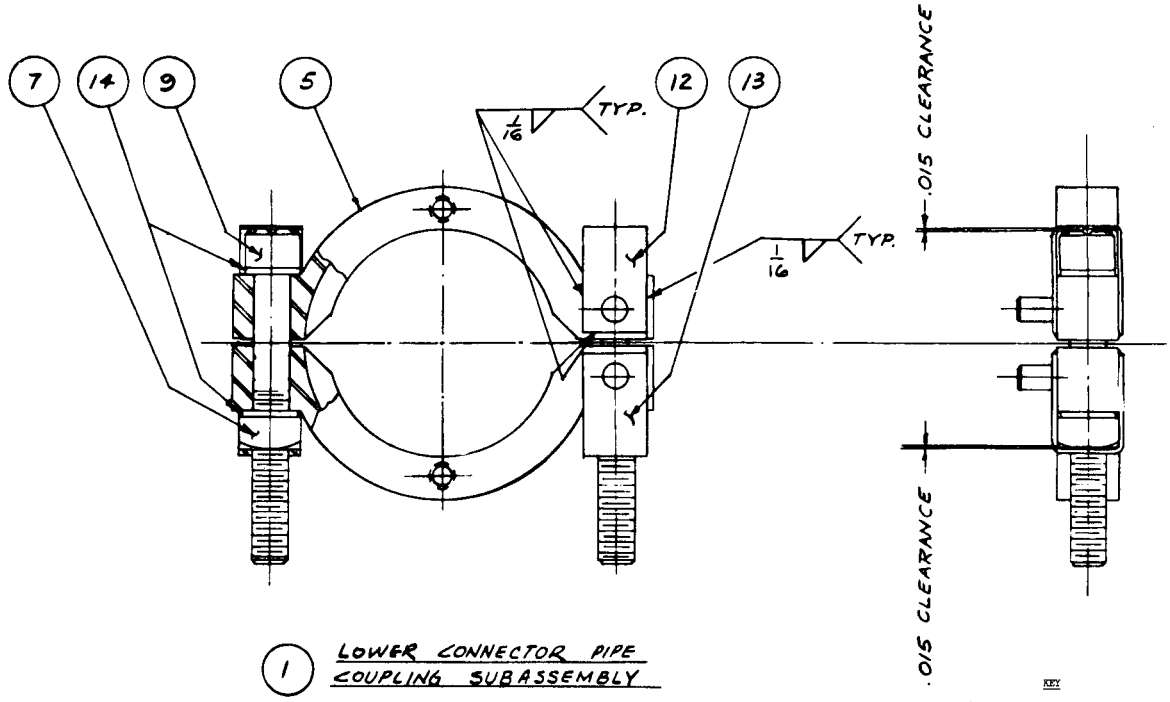

(1) LOWER CONNECTOR PIPE COUPLING SUBASSEMBLY

KEY

1. Lower Connector Pipe Coupling Subassembly
2. Upper Connector Pipe Coupling Subassembly
5. Clamp
7. Nut
9. Bolt
10. Top Clip
11. Bottom Clip
12. Top Pin Clip
13. Bottom Pin Clip
14. Washer

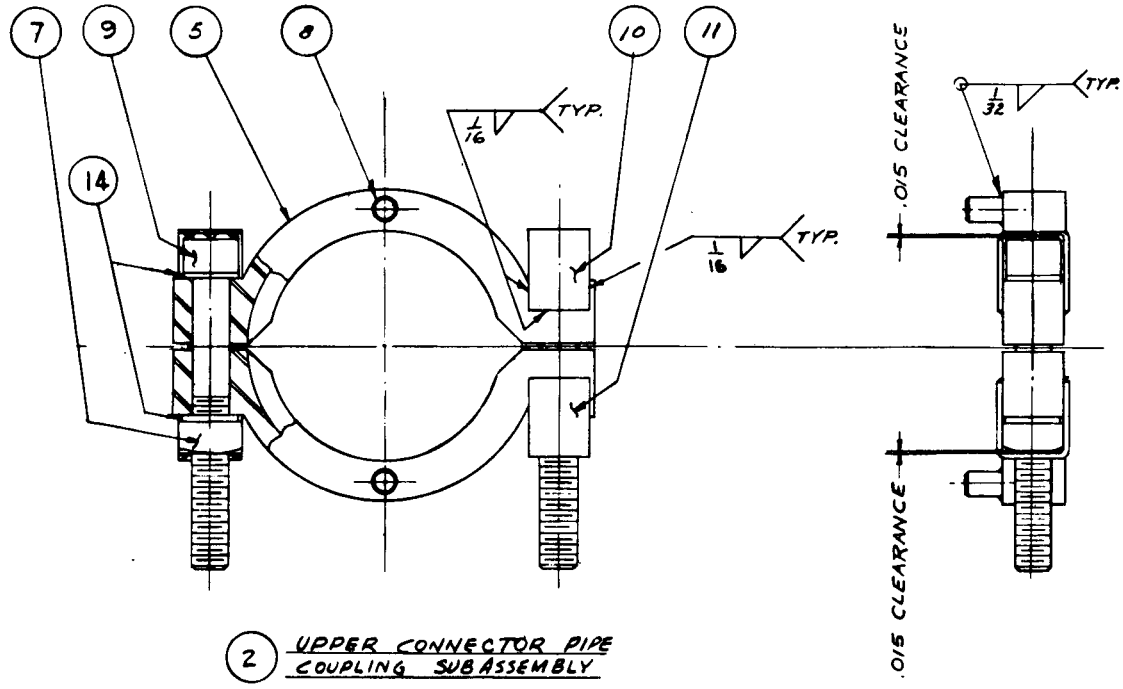

(2) UPPER CONNECTOR PIPE COUPLING SUBASSEMBLY

Ref. Dwg. GNEC 66-M-42 Rev. 3

Fig. 302-12 Detail of coupling component.

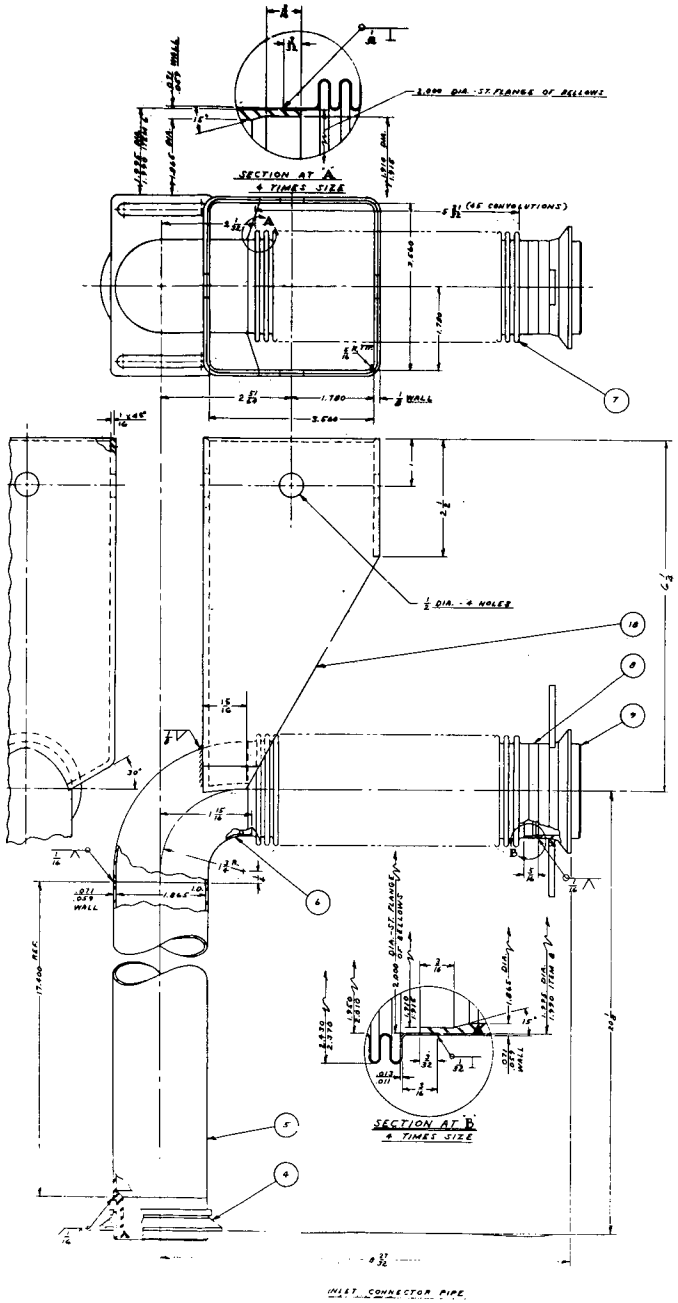

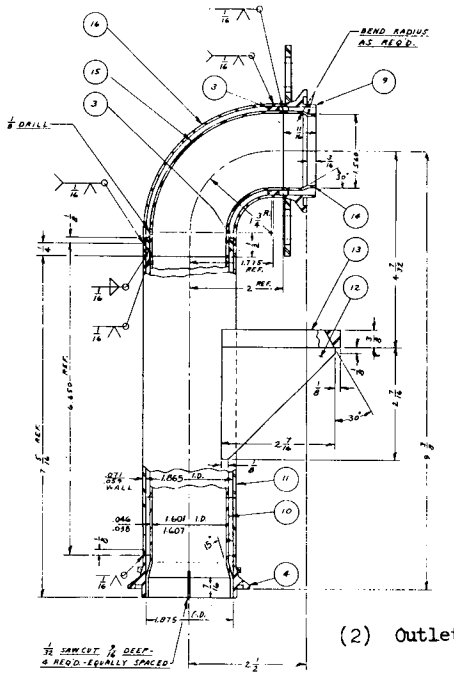

(2) Outlet Connector Pipe

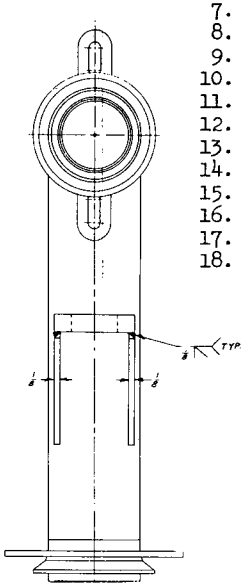

KEY

1. Inlet Connector Pipe
2. Outlet Connector Pipe
3. Spacer-Weld Ring
4. Connector Pipe Lower Flange
5. Inlet Connector Pipe Tube
6. Inlet Connector Pipe Elbow
7. Bellows
8. Inlet Connector Pipe Transition
9. Connector Pipe Upper Flange
10. Outlet Connector Pipe Liner
11. Outlet Connector Pipe Tube
12. Hanger Gusset
13. Hanger
14. Outlet Connector Liner Transition
15. Outlet Connector Liner Elbow
16. Outlet Connector Elbow
17. Inlet Flow Guide
18. Handling Fitting

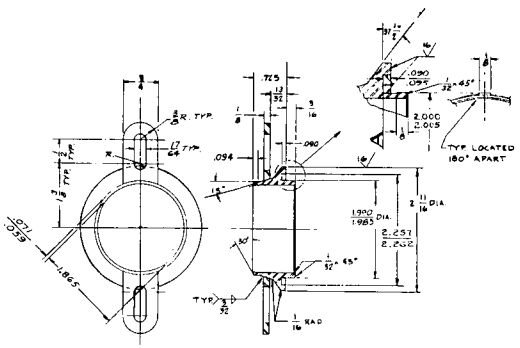

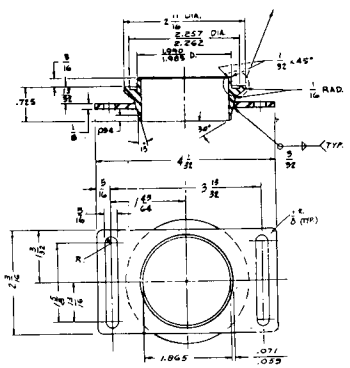

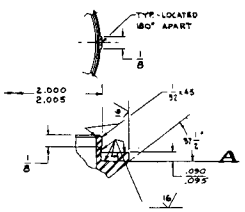

Fig. 302-13 Inlet and outlet connector piping.

Ref. Dwg. GNEC 66-M-41 Rev. 2

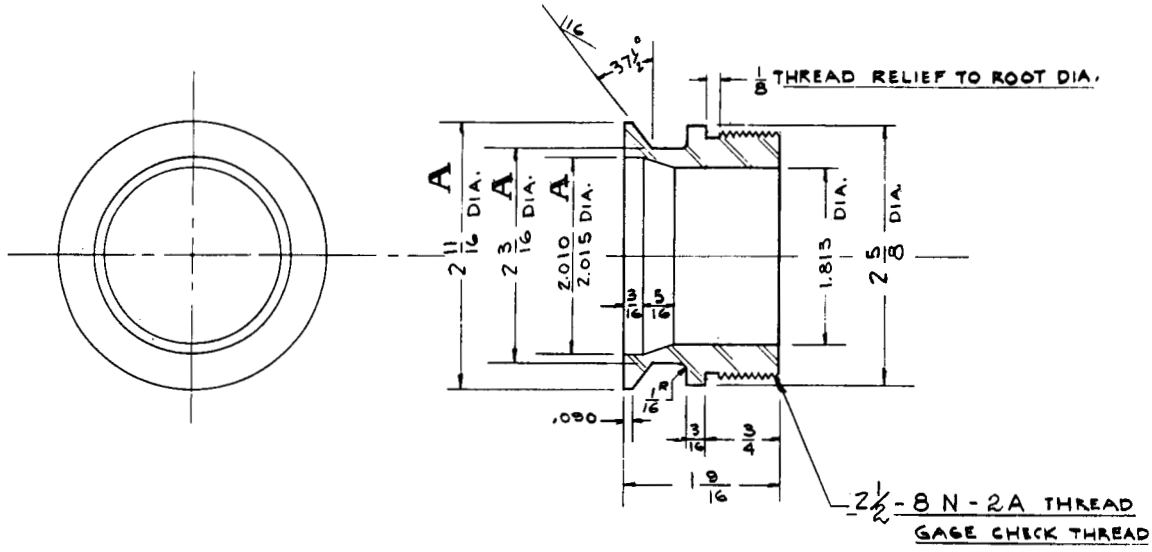

SUPERHEATER INLET NOZZLE

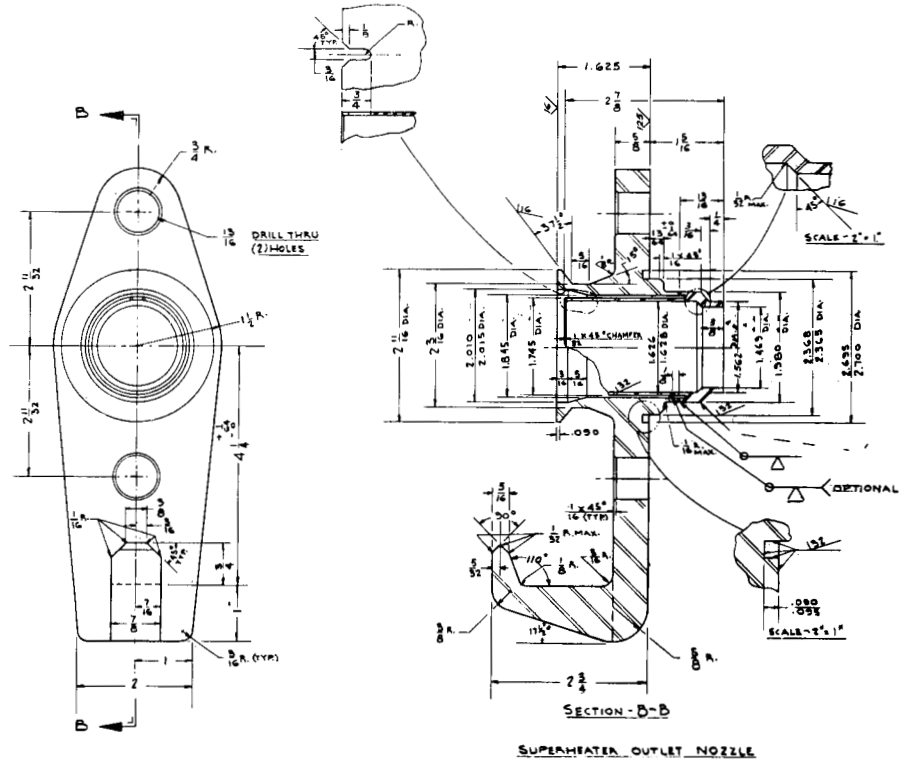

SUPERHEATER OUTLET NOZZLE

Ref. Dwg. GNEC 66-M-16 CFC

Fig. 302-14 Superheater inlet and outlet nozzle.

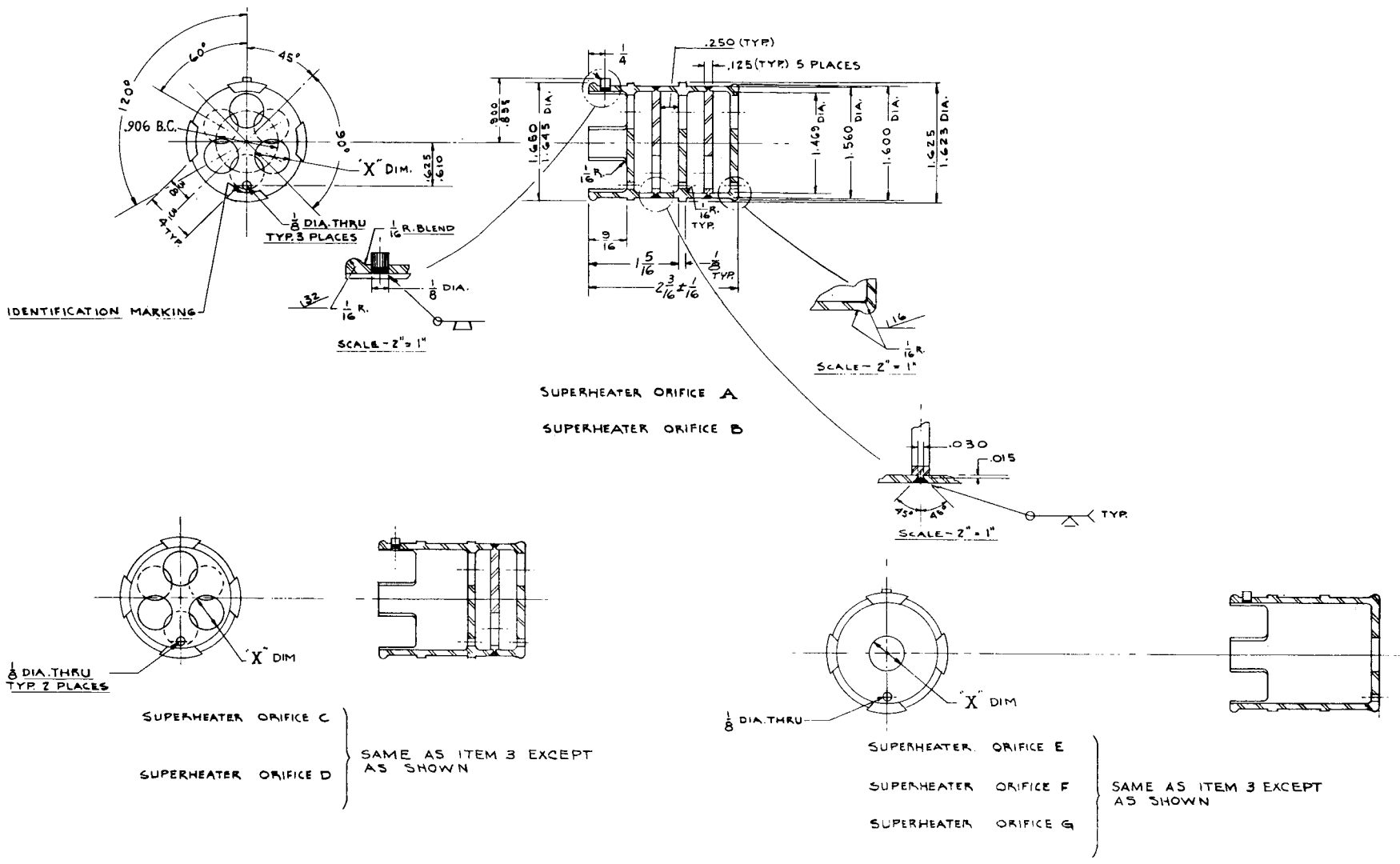

Ref. Dwg. GNEC 66-M-16 CFC

Fig. 302-15 Superheater orifices.

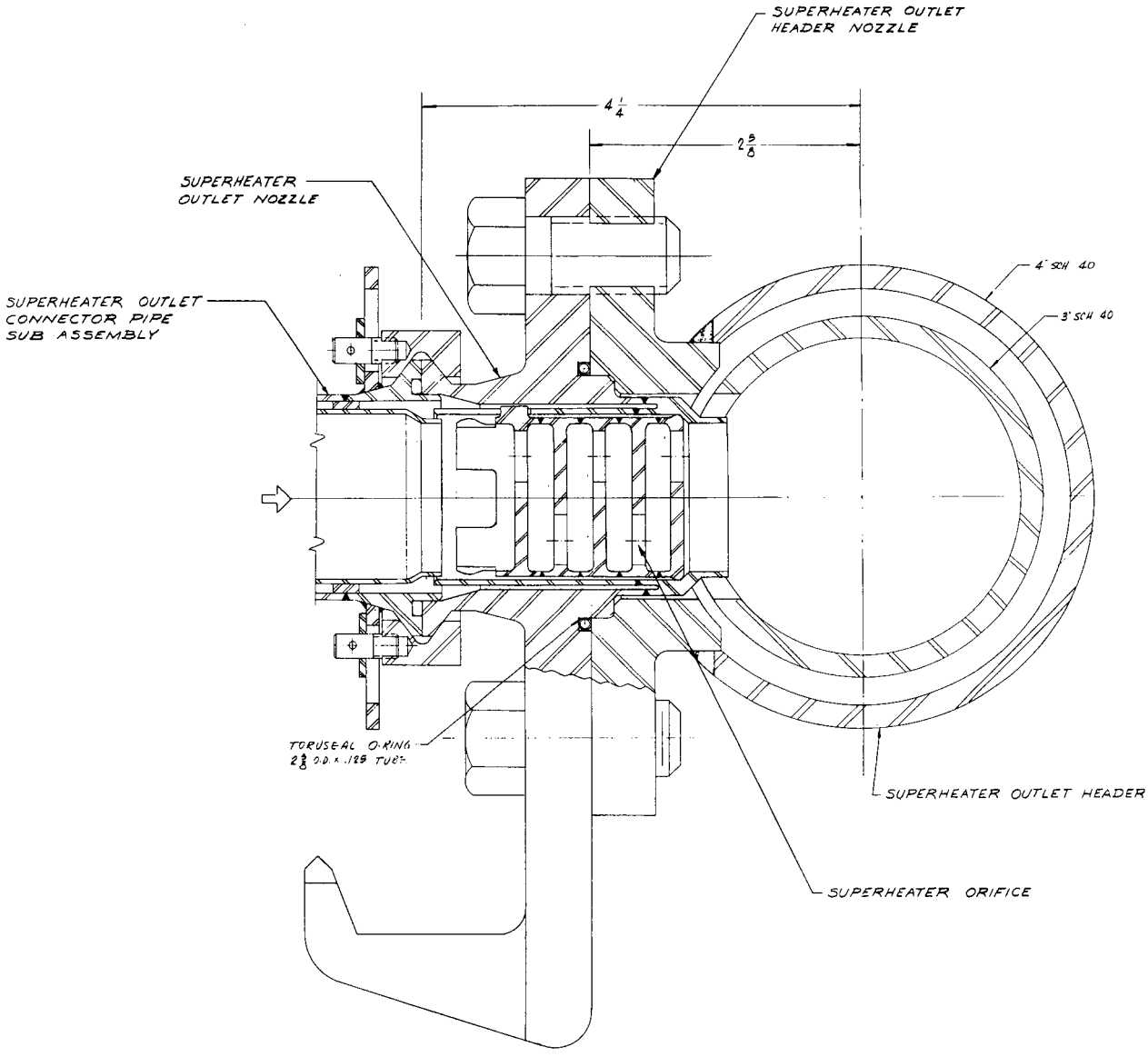

Ref. Dwg. GNEC 66-M-16 CFC

Fig. 302-16 Superheater orifice positioning.

303. FUEL ASSEMBLY LOCATING DEVICES AND NEUTRON START-UP SOURCE

A. Boiler Fuel Holddown Assemblies

Each boiler fuel holddown assembly (Fig. 303-1) positions a group of four boiler fuel assemblies by exerting a lateral spring force which holds the sides of the assembly upper end fitting against the walls of the core structure (Fig. 303-2). When in position, each boiler assembly rests so that the shoulder of the upper end fitting is directly in line with and beneath the walls of the core structure. As long as the boiler holddown is in place it is impossible for the boiler assembly to rise more than the 1/2 inch allowed for clearances and expansion. This is true even if the spring should fail, since the rigid wedges are keyed to prevent the lateral motion required to clear the structure walls.

The boiler fuel holddown assembly consists of a lifting column, a guide cover, four wedges, four boiler spacers, and eight leaf springs. All components except the leaf spring and rivets are fabricated from stainless steel Type 304L modified by restricting the cobalt content to less than 0.2 per cent. The leaf springs are fabricated from age-hardenable nickel-chromium alloy sheet material which conforms to the requirements of the Aeronautical Material Specification ASM 5542. All rivets are austenitic stainless steel Type 347.

The boiler fuel holddown assembly is designed to enter through the top of the core structure boxes. Upon entering the boiler spacers move the fuel assemblies outward toward the walls of the core structure boxes thereby providing an opening for the spring wedges. The spring wedges provide the forces which position the four boiler fuel assemblies against the walls of the core structure box. The lifting column facilitates the installation and removal of the boiler fuel holddown assembly which is accomplished with the same handling tool used for the start-up source and the boiler shims.

B. Superheater End Wedge Assemblies

The superheater end wedge assemblies position the superheater assemblies laterally within the core structure as shown on Fig. 303-3. The wedges take up the clearances required for fuel handling and prevent this space from creating excessive water gaps between superheater assemblies. The superheater end wedge seats and is latched onto the support lugs of the reactor core structure.

The superheater end wedge assembly as shown on Fig. 303-4 consists of a wedge, a latch fitting, a handling fitting, four rivets, and a spacer. All components except the rivets are fabricated from stainless steel Type 304L modified to 0.2 per cent maximum cobalt. The rivets are austenitic stainless steel Type 347. The lifting fitting facilitates

the installation and removal of the superheater end wedge assembly and employs the same handling tool as the start-up source assembly, boiler shim rod assemblies, and the boiler fuel holddown assemblies.

C. Neutron Start-up Source

The startup neutron source is an antimony-beryllium source which emits up to 8.5×10^8 neutrons/sec at the time of delivery to the plant. The source consists of cylinders of antimony which have been irradiated by thermal neutrons and which are surrounded by an annular ring of beryllium. A drawing of the source is shown in Fig. 303-5. The beryllium ring is approximately 46 in. long and is clad with stainless steel inside and out. Up to 18 antimony cylinders may be placed inside the beryllium ring. Each antimony cylinder is .450 in. in diameter and 2-1/4 in. long and is canned in stainless steel. The total source strength of the 18 antimony rods is 1060 curies.

The neutron source will be located inside the inner shell of one boiler fuel assembly. Spacer springs are provided to center the source in the fuel assembly inner shell. The source will be moved from assembly to assembly as required for various stages of pre-operational testing, reactor startup, and sustained reactor operation. Any number of antimony cylinders, up to 18, may be inserted in the beryllium ring to vary the strength of the source as required for various stages of testing and operation. A handling lug which allows insertion and removal of the source is attached to the top of the neutron-source assembly. The same tool which is used for handling the boiler hold-down assemblies, the superheater end wedges and the boiler shims is used for handling the neutron source. When not in the reactor, the neutron source and its antimony cylinders are kept in the fuel storage pool. Transfer from the pool to the reactor is done in the fuel-transfer coffin.

Prior to reactor startup, the source decays within a 60-day half-life. However, during reactor operation, the source is irradiated, and increases in strength.

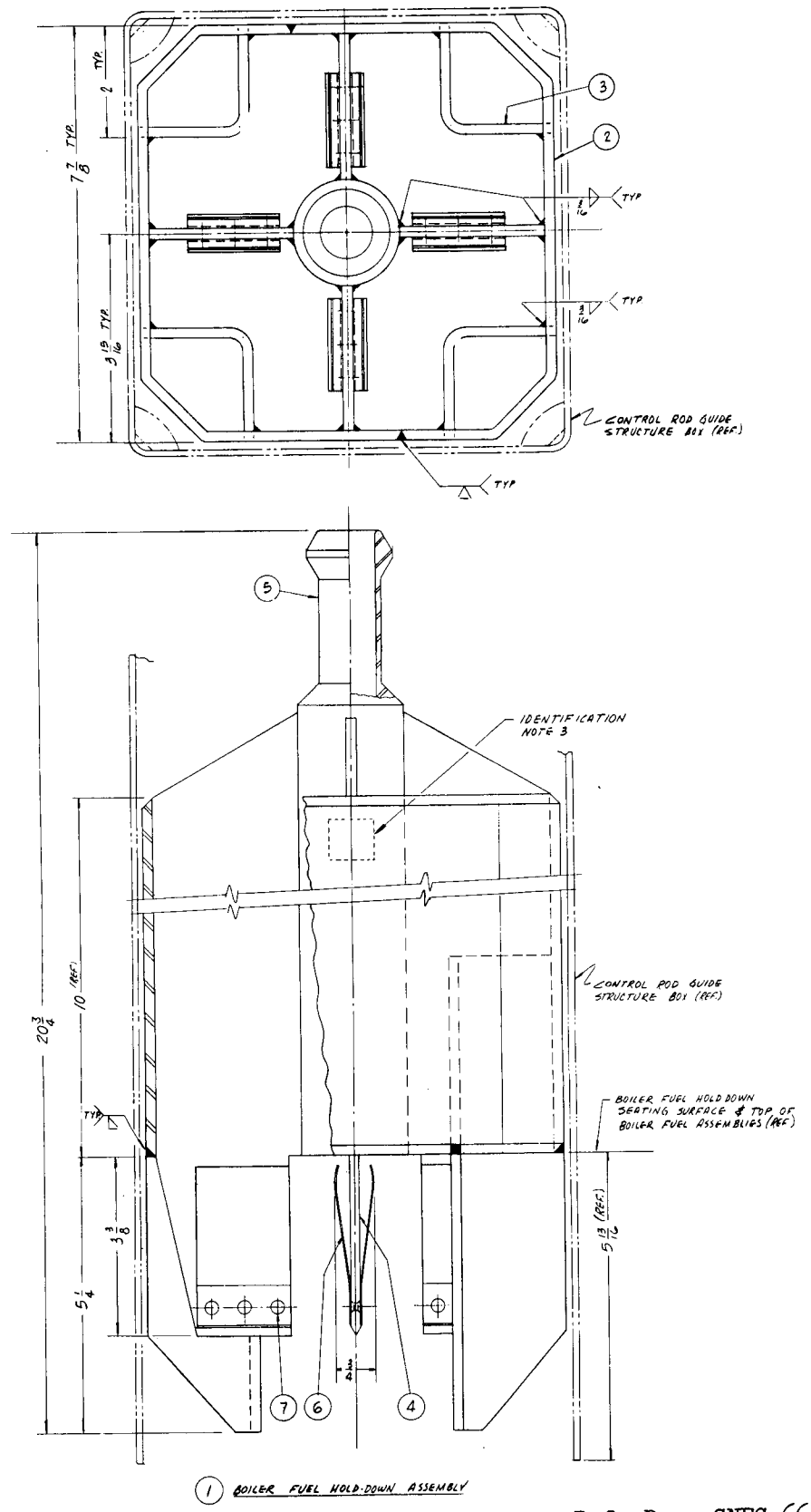

Ref. Dwg. GNEC 66-M-36 CFC

Fig. 303-1 Boiler fuel holddown assembly

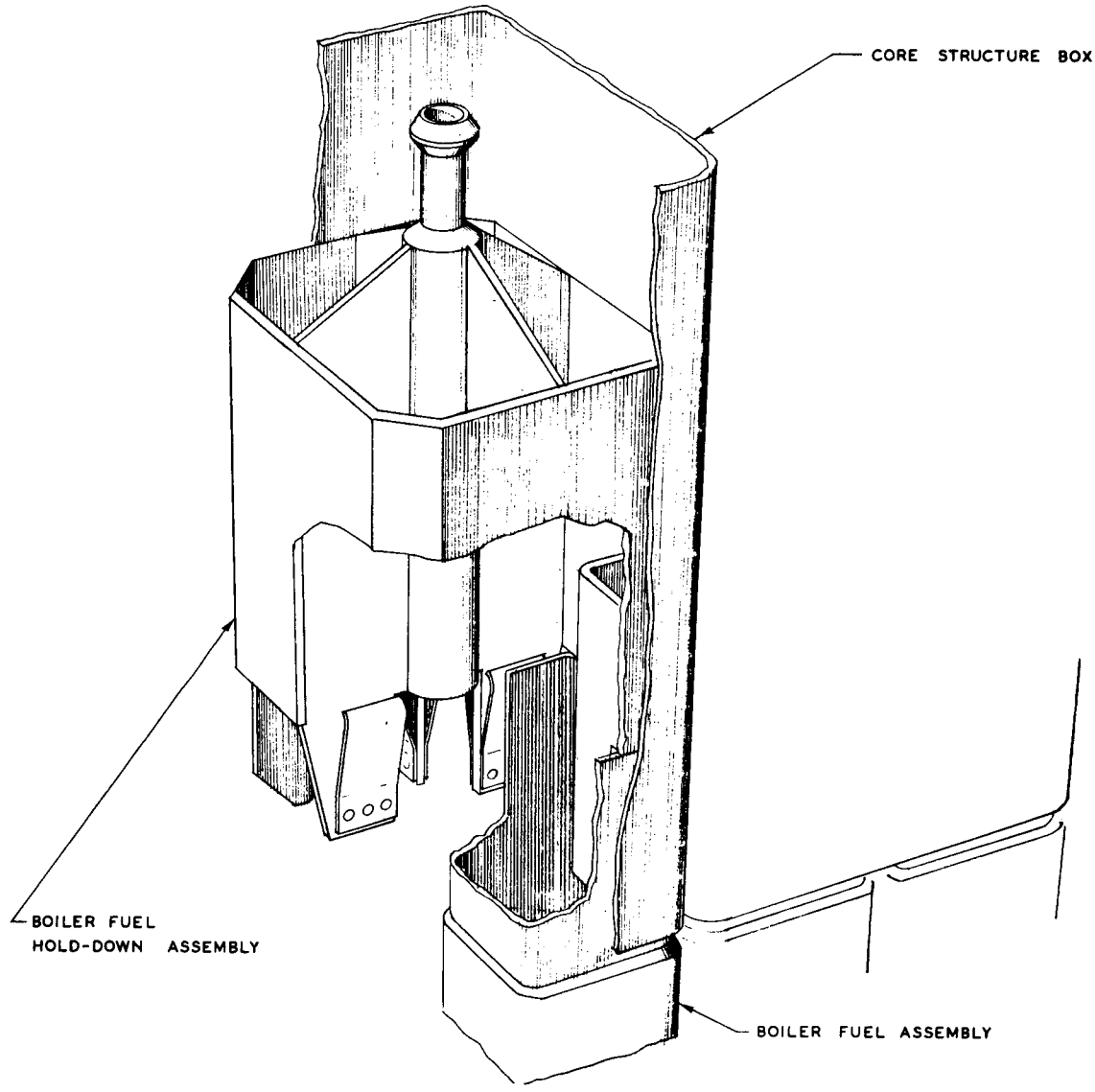

Fig. 303-2 Perspective of the boiler fuel holddown assembly.

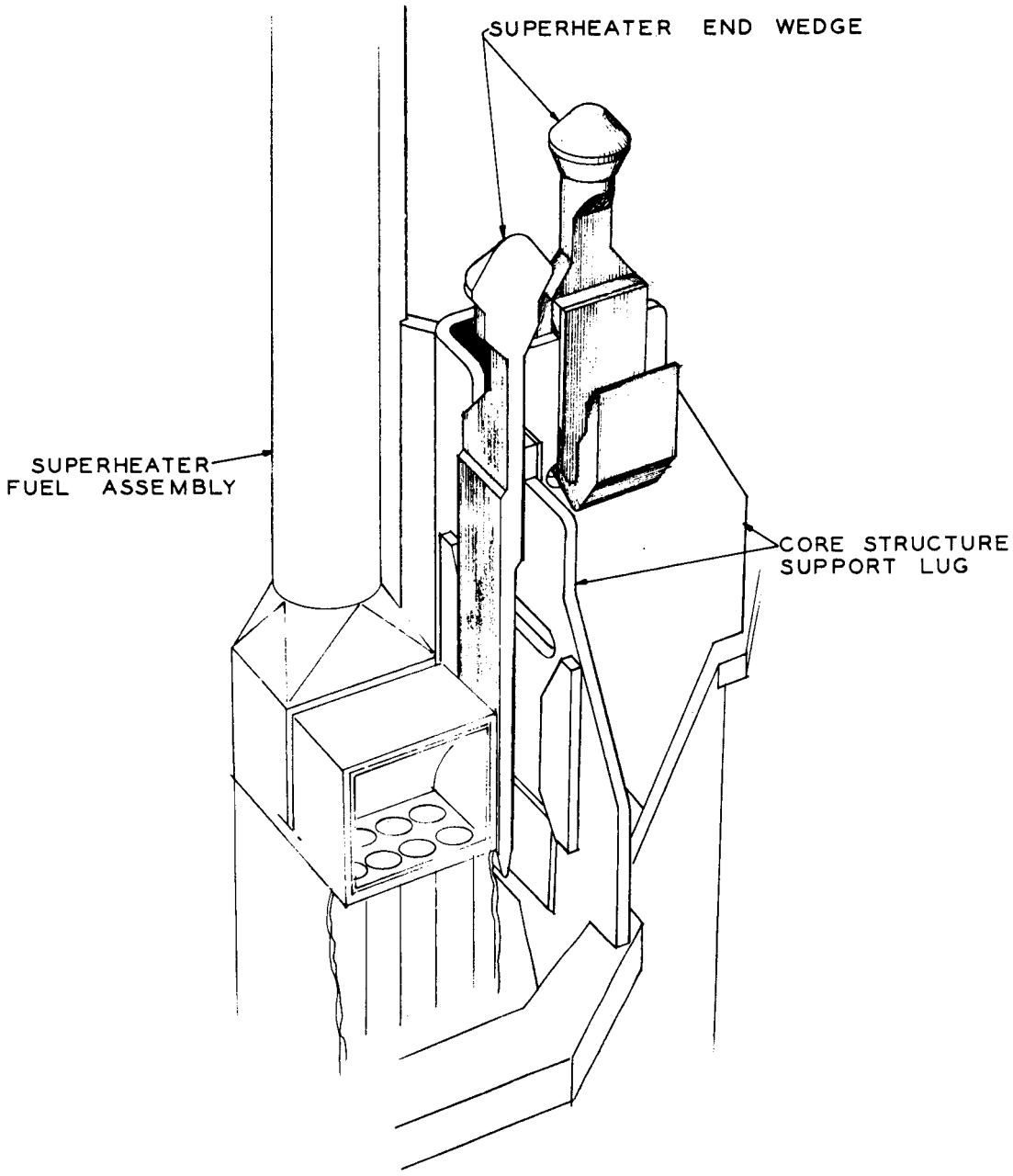

Fig. 303-3 Superheater end wedge in position in core structure.

KEY

1. Superheater End Wedge Assembly
2. Handling Fitting
3. Spacer
4. Latch
5. Latch Spring
6. Wedge

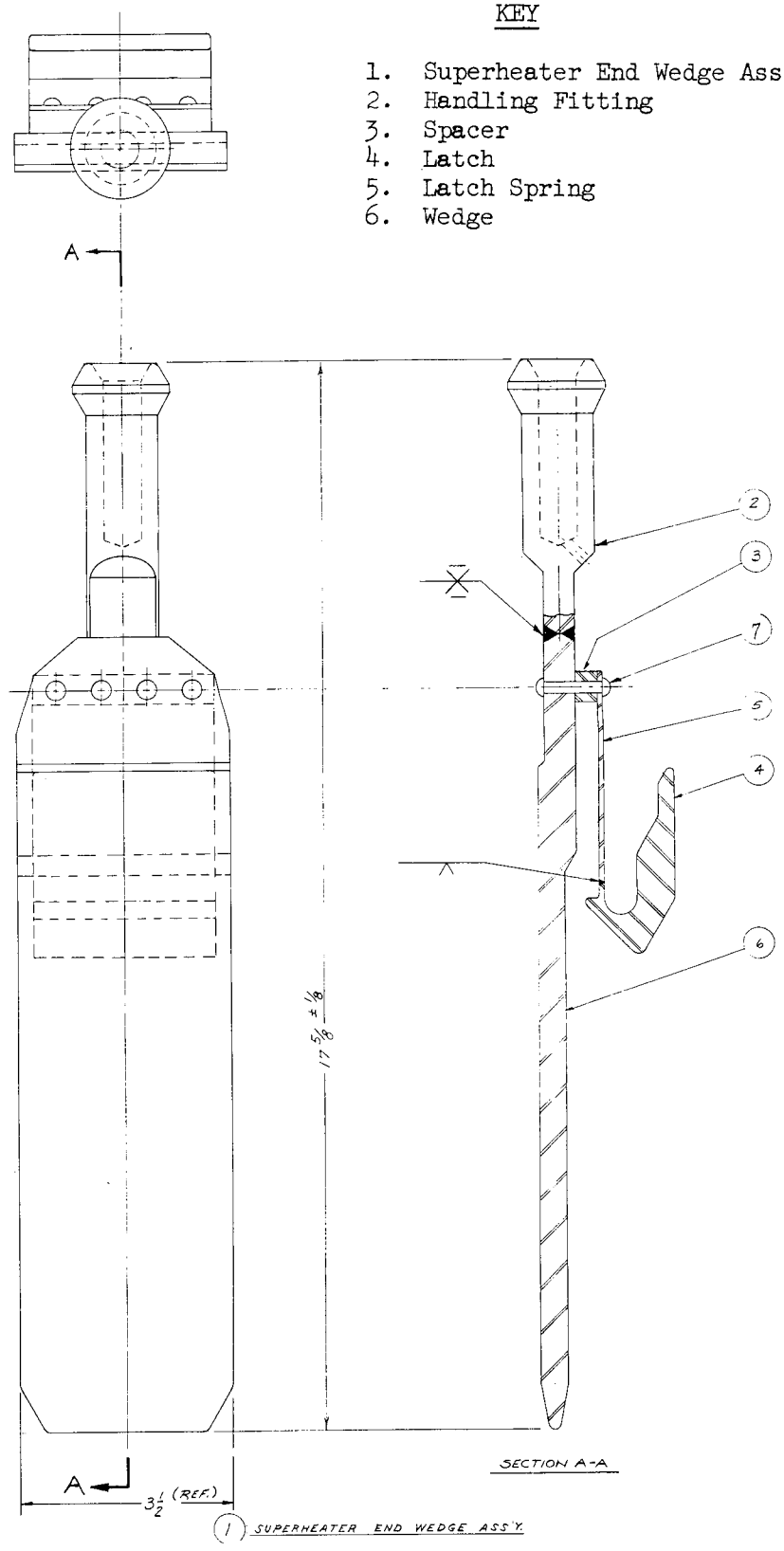

Ref. Dwg. GNEC 66-M-53 CFC

Fig. 303-4 Superheater end wedge assembly.

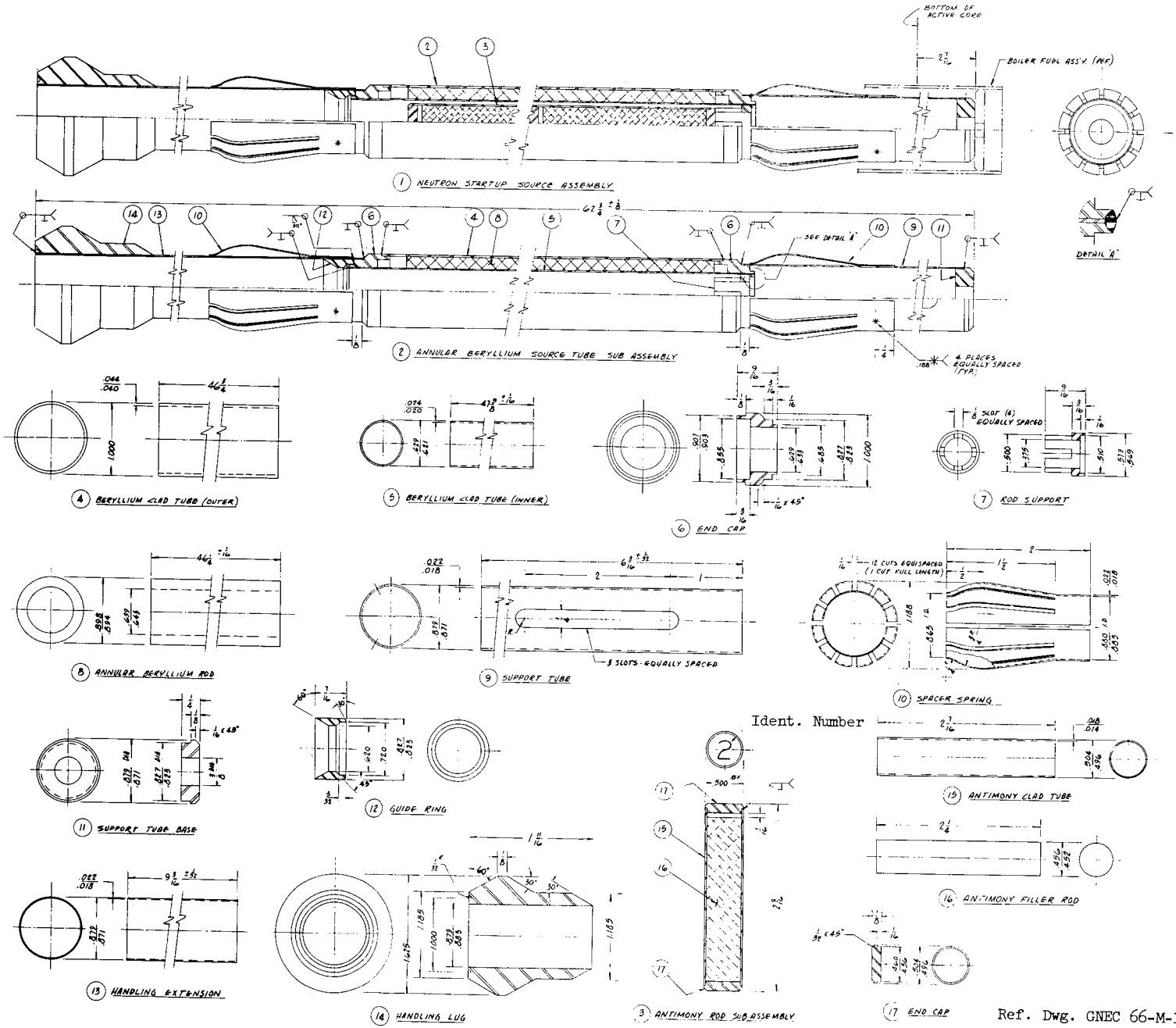

Ref. Dwg. GNEC 66-M-15 CFC

Fig. 303-5 Startup neutron source.

304. REACTOR CORE STRUCTURE

A. General

The reactor core structure, shown in perspective view in Fig. 304-1, supports and spaces the 64 boiler-fuel and 32 superheater-fuel assemblies, and contains the guide channels for the superheater poison shims and the 17 cruciform and slab control rods. This assembly is mounted and bolted to the flange of the 1-in.-thick conical core support barrel welded to the bottom head of the reactor pressure vessel, as shown in Fig. 301-2, and is guided by sway lugs attached to the vessel. This structure is so designed that if core modifications are required during the operating life of the plant the complete core structure can be removed as a unit and a new unit installed. The main components of the structure are the bottom core plate and attachments, the control rod guide structure at the top, and the baffle support shell which joins the two and supports and aligns the upper rod guide structure. With the exception of the Zircaloy-2 lower panels of the rod guide structure, all materials of construction are austenitic stainless Type 304 or 304L.

B. Core Plate and Attachments

The 5-in.-thick stainless Type 304 core plate, shown in Fig. 304-2, is bolted to the core support barrel flange with twelve 1-3/8-in.-dia., 10-in.-long, Type 304 stainless steel, T-shaped bolts. The bolt holes in the core plate, shim, and core support barrel flange are made as elongated slots so that the bolt, washer and nut combination can be installed and removed if required as a complete assembly. Sheet metal nut retainers and tee bolt rotation stop dowels are an integral part of the underside of the core support barrel flange.

The core plate contains a total of 92 machined holes for accommodating boiler fuel assemblies. Twenty-four of the twenty-eight extra holes are covered by the four, bolted, angle supports for the superheater assemblies and are provided to permit converting the reactor to an all-boiling type if future operation of the station demonstrates nuclear superheating to be unfeasible for reasons of excessive fuel failures, high radiation levels in the steam cycle equipment and/or other associated costly operating problems. The remaining extra four boiler fuel assembly blind holes are located in each of the four accessible corners of the core between the four corners of the superheat region; these holes are for the future addition of natural convection cooled assemblies if operation should indicate that the power level from the 64 boiler fuel assemblies be not up to design rating and that a slight increase in power be required. The flow through the core plate to the boiler fuel assemblies is made proportional to the power level of the individual assemblies so as to maintain the steam void fraction at the assembly outlets at a uniform value. The flow distribution over the boiler region is obtained with five different hole sizes in replaceable cup

type orifices installed in the core plate and locked in place by bayonet type fittings. The weight of the boiler fuel assemblies also assists in maintaining the orifices in their locked position.

A square pattern of 49 smaller drilled holes (1/4-in.-dia.) surrounds the boiler fuel assembly holes and their purpose is to distribute the circulating water to the surrounding space between the core baffle support and the outside of the fuel assemblies to minimize steam voids in the moderator region.

All bolts attaching the superheater fuel assembly support angles, the cruciform control rod lower stop plate structure, and the four channel guide angles for the Zircaloy lower panels to the core plate are locked in position with crimp type lock washers to prevent loosening and escape of the bolts into the flow stream.

C. Baffle Support

This octagonal cylinder structure made of 3/8-in.-thick ASTM A240-304L stainless steel plate, with top and bottom flanges made from ASTM A276-304L stainless steel bar stock is dowelled and bolted to the core plate with 24 hex head cap screws. The baffle support completely surrounds the fuel zone and separates the recirculating water downcomer flow between the thermal shield and baffle from the upward flow within the fuel zone inside the baffle.

Bolted to the upper flanged end of the baffle support are four angle shaped spacers to which are welded eight (8) bearing pads against which the superheater fuel assemblies are maintained in contact. The spacer angles are designed so that they can be removed from the baffle support in case increased clearance for the superheater fuel assembly is required and to facilitate the removal of a "stuck" fuel assembly. Holes are drilled in each bearing pad at each superheater fuel assembly location; these 1/2-in.-dia. holes direct the flow from the 1-in. Schedule 40 emergency cooling header anchored to the baffle support into the spray pan on the superheater fuel assembly. The four 1-1/4-in. Schedule 40 vertical superheater emergency cooling pipes are supported by the core structure sway lugs and extend to the top of the pressure vessel where cooling water from the emergency boiler spray header, mounted on the underside of the vessel cover flange, enters the open, strainer containing end of these extension pipe lines.

D. Control Rod Guide Structure

The control rod guide structure guides the boiler cruciform and superheater slab control rods in and out of the core region, shrouds the rods and their extension shafts from the recirculating water flow induced vibration; and positions the fuel assemblies with respect to each other to form aligned guide channels for the control rods in the two fuel zones. The rod guide structure is mounted on the top flange of the core baffle and attached to it by welding the four corner angle support lugs of the structure to the support baffle. The over-all height

of the core support structure above the top surface of the core support barrel is 15 ft-1/2 in.

The control rod guide structure consists of a 8-ft, 7-7-/8-in.-high center section formed by a lattice of 16, stainless steel Type 304L, square boxes (outside dimension 8.354 in., wall thickness 1/8 in.) arranged in a 4 x 4 array and joined to each other by plug welding to 24 1/2-in.-thick by 5/8-in.-wide Type 304L spacer bars. The spacer bars establish the guide channels for the nine cruciform control rods in the boiler fuel region. The plug welds between the boxes and the bars are 3/8-in.-dia. and are spaced three inches apart. The upper portions of the boxes have two 5-1/2-in.-wide, 24-1/2-in. and 15-1/2-in,-long cutouts, on all sides to permit radial flow of the recirculating water to the downcomer.

The guide channels for the slab control rods between the boiler and superheater fuel zones and for the poison shims are formed by panels attached to the four sides of the box lattice. The panel consists of an upper stainless steel section above the core region and a lower section of Zircaloy-2 in the fuel zone. The stainless panel section is 8 ft, 6-7/8 in. high and consists of two .090-in.-thick sheets separated by fifteen 1/4 in. x 1/2 in. spacer strips; the sheets are joined to the spacer strips by 5/16-in.-dia. plug welds on 3-in. center spacing. The spacer strips between the two sheets form thirteen 1/4 in. x 1.727 in., 10-ft-long channels in the two panel section assembly for the insertion of the 1/8 in. x 1-5/8 in. poison shims. The lower panel section is similarly constructed with Zircaloy-2 materials. The stainless steel and Zircaloy-2 sections are joined to each other with 3/16-in. flat-head machine screws and twist-off nuts which are locked to each other by welding.

The upper panel section is separated 7/16 in. from the box lattice by spacer T's at the midpoints of the lattice structure and spacer angles at the corners; the channels formed by the spacer pieces constitute the guide channels for the 1/8-in.-thick, tee-reinforced, slab control rods. The panel is connected to the structure at the angle and T-spacers by 3/8-in.-dia. plug welds and twist-off nut type screw fasteners.

The lower Zircaloy panels are joined to each other at the corners, except for 9 inches at the top and bottom, by screw fasteners, attached to a Zircaloy angle, to stiffen these members against flow induced vibration; additional stiffening is obtained by a vertical Zircaloy T member attached at the center of each panel and holes are drilled at the lower end to relieve any pressure differential across the inner and outer faces of the flat panel section. The panels were not joined to each other at the top and bottom so that radial differential thermal growth between the stainless steel rod guide structure and the Zircaloy panel can be absorbed by slight bending of the panel section. The lower tongue ends of the Zircaloy panels are guided and free to expand in the four core plate, attached, panel supports.

Each boiler fuel assembly is positioned in the core by the spherical machined section of the bottom end fitting aligned in the tapered hole in the core plate and the top end fitting maintained against the upper guide structure by the boiler holddown fixture described in Section 303. This fixture, which fits in the 3/8 cruciform channel in the center of four (4) boiler assemblies, has four leaf spring wedges which force the fuel assemblies against the inside wall surface of the rod guide structure. A shoulder on the fuel assembly fits under the 1/8-in. thick bottom edge of the rod guide structure and thus limits the vertical movement of the fuel. The boiler holddown fixture, due to its weight, (40 lb) also assists in maintaining the fuel assembly bottom fitting against the core plate seat to minimize leakage into the moderator space around the boiler fuel assemblies.

Each superheater fuel assembly is oriented at its lower end by the locating holes in the superheater angle support attached to the core plate. The upper end of the assembly is positioned radially by bearing against the contact surface of the superheater angle spacer bolted to the top flange of the baffle support; the upper end connections of the superheater fuel assembly are designed such that the standpipes exert a force in the radial direction to maintain the top of the fuel assembly against these contact surfaces. Adjacent fuel assemblies on each side are "pushed" against each other by the superheater end wedges, described in Section 303, which are installed between the end superheater fuel assemblies and the adjacent support lug of the rod guide structure.

In the boiling zone the cruciform control rods are guided at the top by the control rod guide structure and in the core region by the Zircaloy boxes of the boiler fuel assemblies. When fully inserted the bottoms of the rods are 2 in. above the lower end of the fuel zone. When the rods are fully withdrawn out of the fuel regions, with the rod bottom 3 in. above the core top, the rods are completely guided within the rod guide structure and their upper poison section is below the openings provided for cross flow of the recirculating water. For the slab control rods the positioning is the same as for the boiler control rods, and these rods are guided in the core region by the Zircaloy panel on one side and the Zircaloy boiler fuel box on the other.

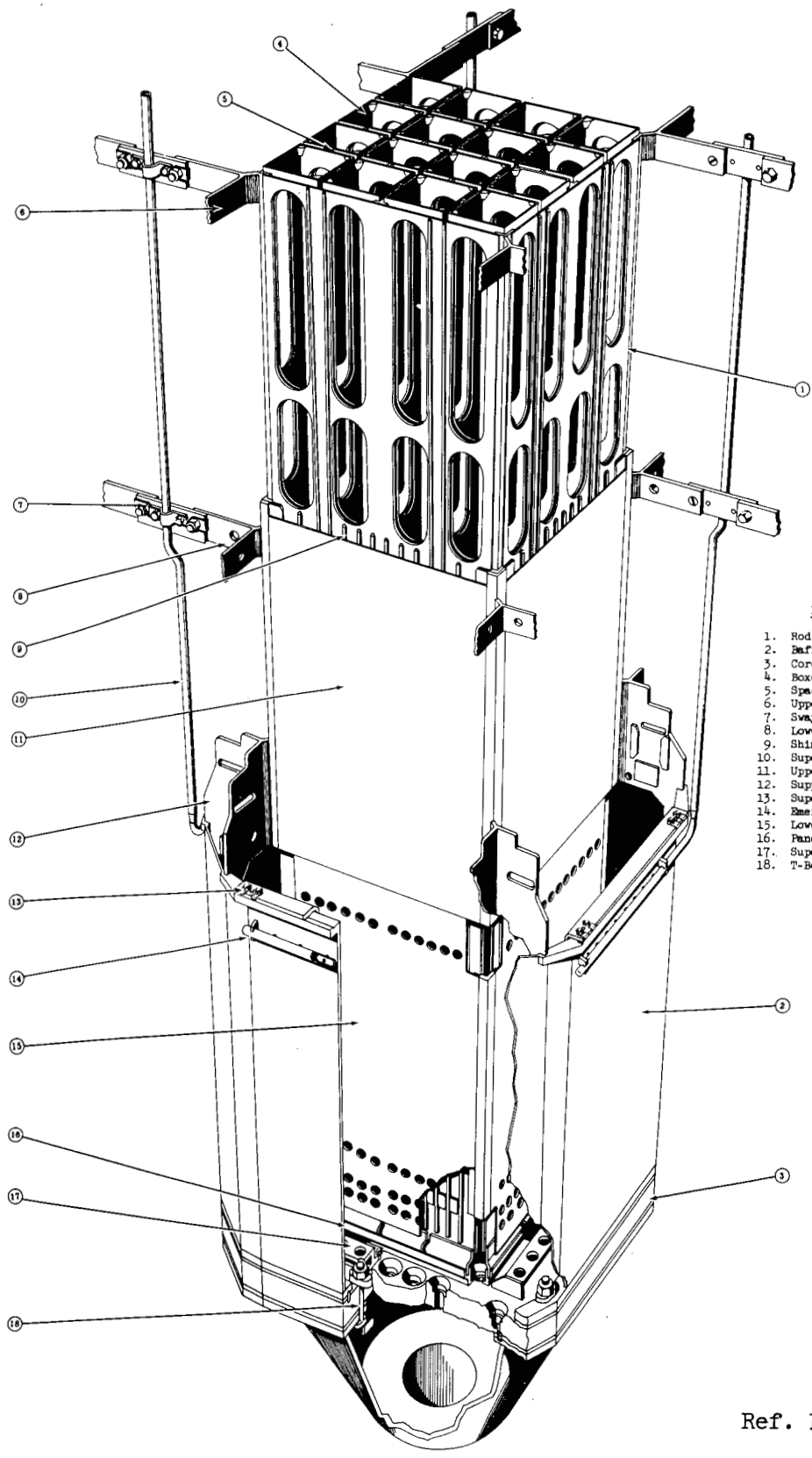

KEY

1. Rod Guide Structure
2. Baffle-Support
3. Core Plate and Attachments
4. Boxes
5. Spacer Bar
6. Upper Sway Lug
7. Sway Link
8. Lower Sway Lug
9. Shim Channel
10. Superheater Emergency Coolant Pipe
11. Upper Panel Assembly
12. Support Lug
13. Superheater Spacer
14. Emergency Coolant Header
15. Lower Panel Assembly
16. Panel Support
17. Superheater Support
18. T-Bolt

Ref. Dwg. 66-M-19 Rev. 1

Fig. 304-1 Perspective view of reactor core structure.

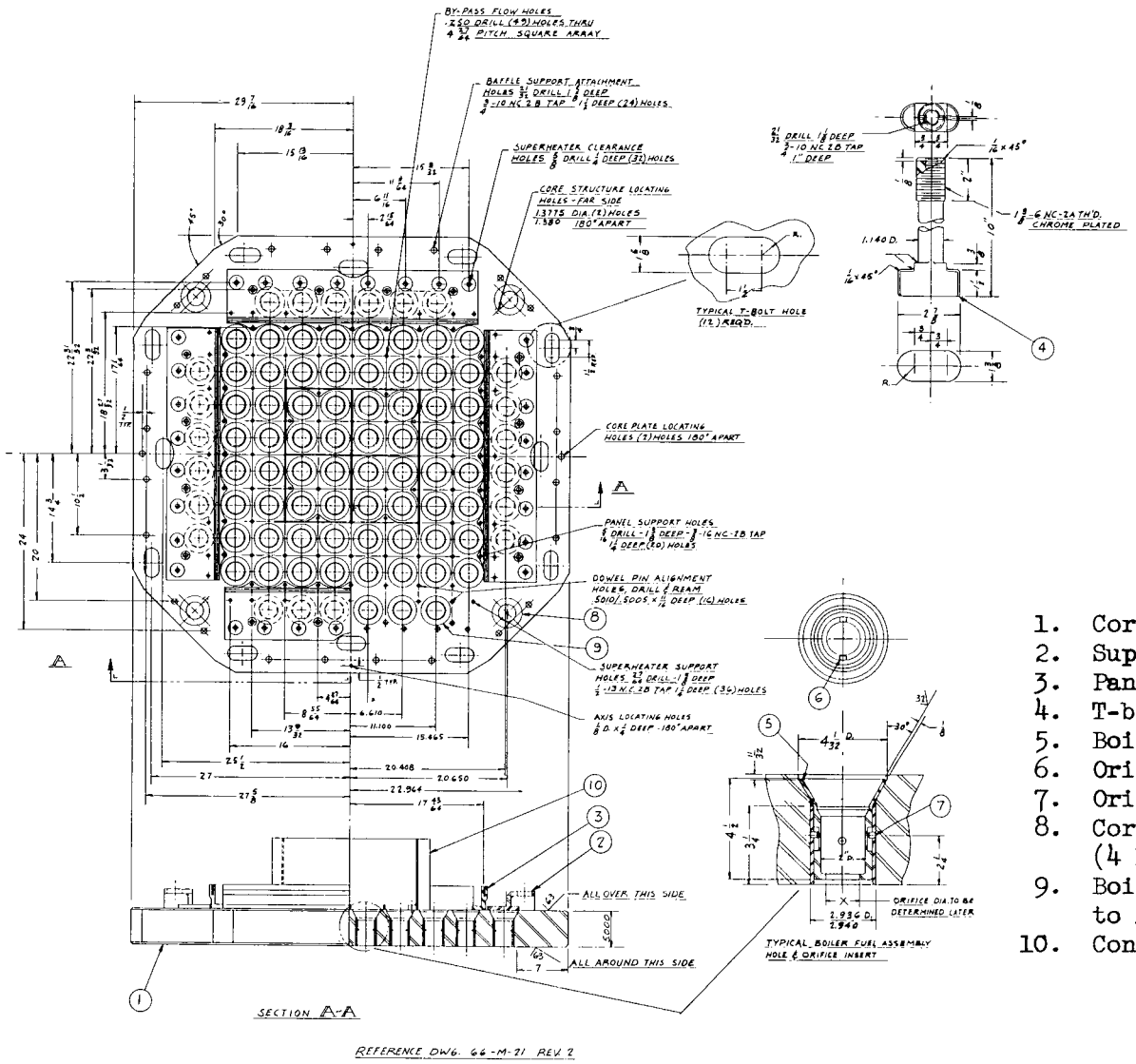

KEY

1. Core Plate
2. Superheater Support
3. Panel Support
4. T-bolt
5. Boiler Orifice
6. Orifice Lift Pin
7. Orifice Holddown Pin
8. Corner Boiler Assembly Locating Hole (4 Required)
9. Boiler Assembly Holes for Conversion to All-Boiling Core (24 Required)
10. Control Rod Stop

Fig. 304-2 Reactor core structure core plate.

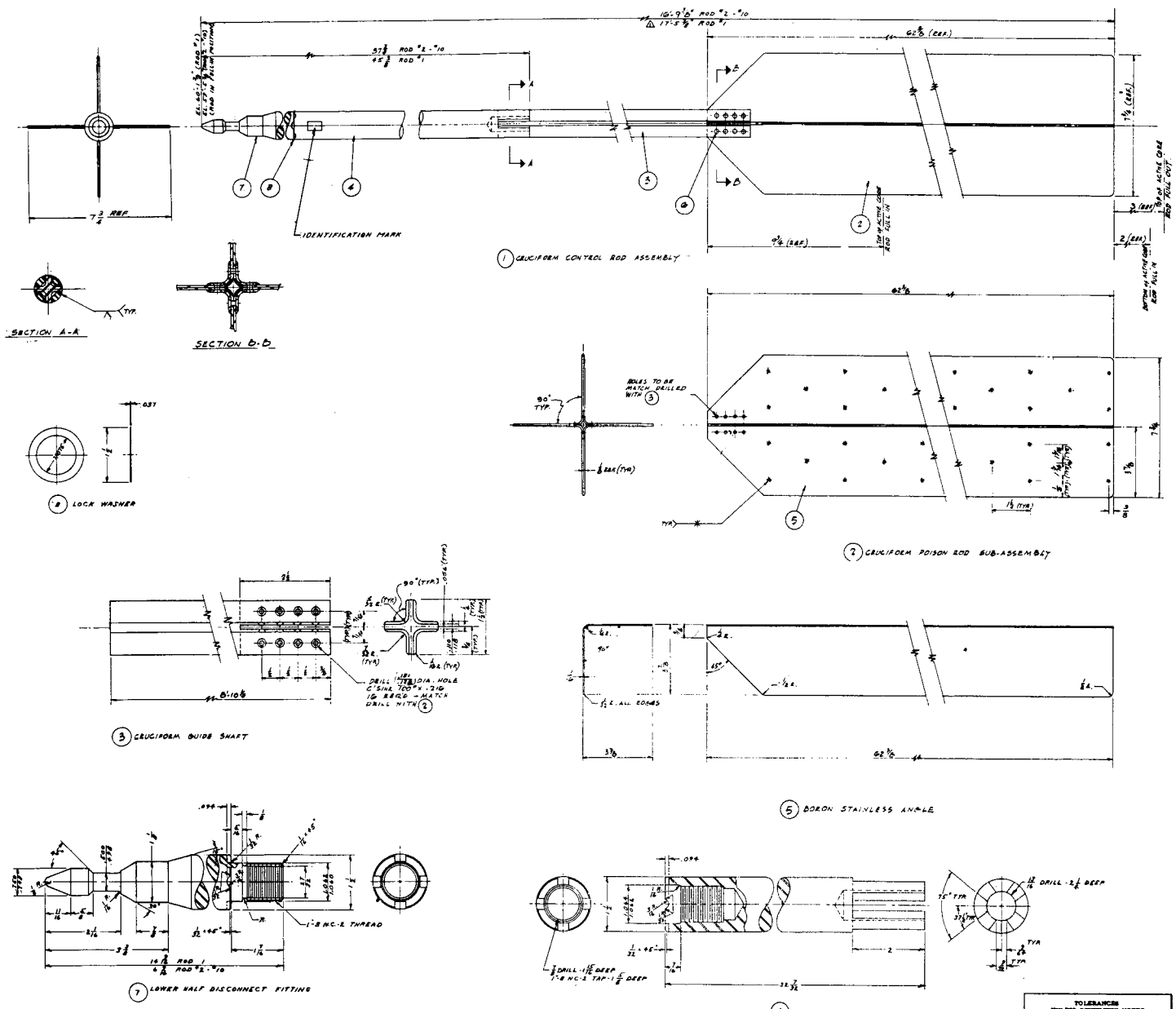

Ref. Dwg. GNEC No. 66-M-50

Fig. 305-1 Cruciform control rod.

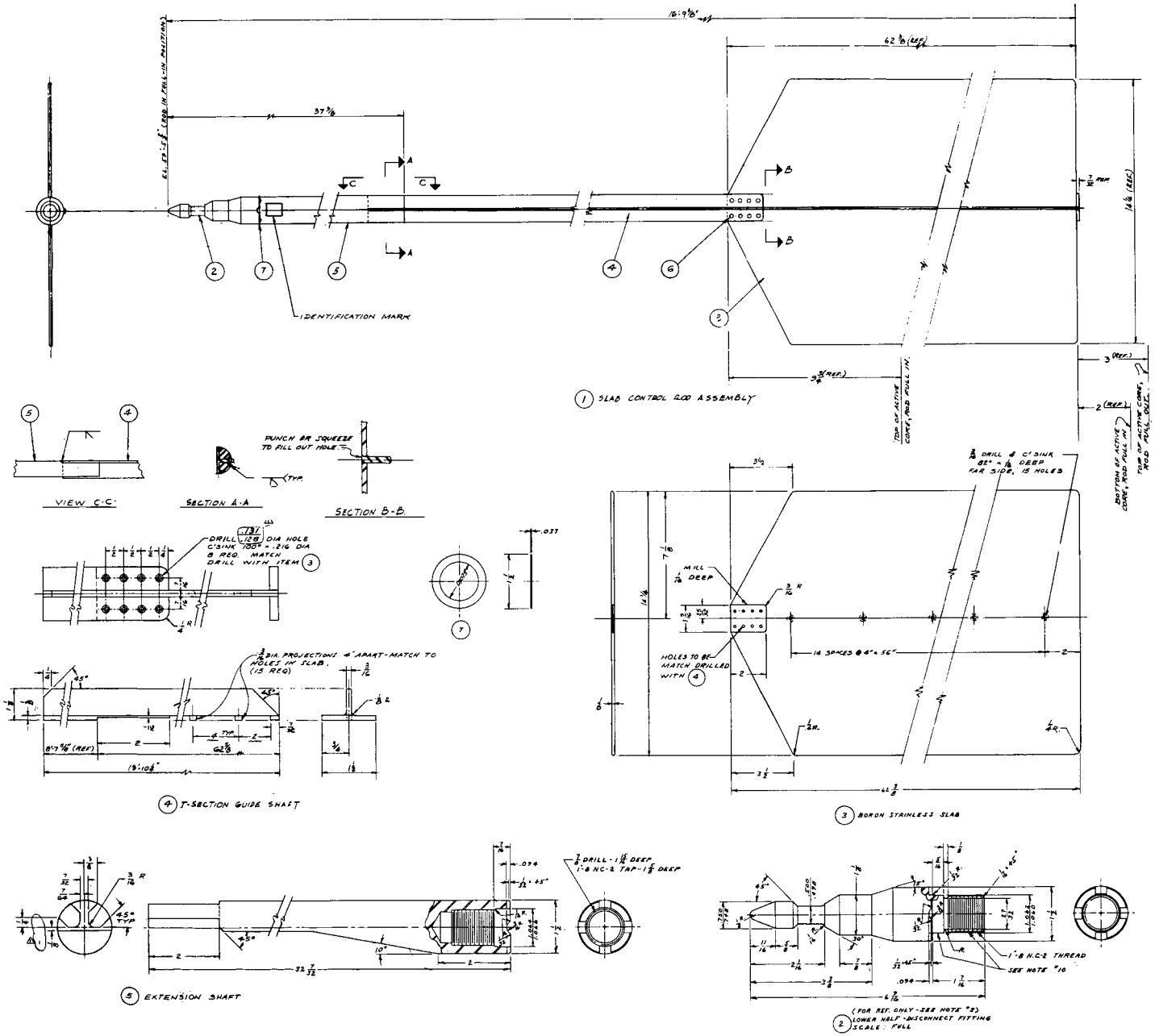

Ref. Dwg. GNEC No. 66-M-51

Fig. 305-2 Slab control rod.

306. REACTOR PRESSURE VESSEL

A. Reactor Vessel

The reactor pressure vessel shown in Fig. 306-1 is a hollow right-circular cylinder with an 84-in. ID and a 3-1/8-in. thick wall composed of SA 212 Gr B carbon steel internally clad with 1/4-in. thick austenitic stainless steel. The vessel has an integral hemispherical lower head 2-3/16 in. thick; the upper 5-in. thick torospherical head is removable by means of a bolted flange closure. The over-all height of the vessel from inside to inside is 26 ft, 7 in. and the internal volume is 992 cu ft. The total weight of the reactor vessel is 61 tons, including the head closure, thermal shield, and all permanently attached internals. Table 306-1 gives a summary of the pressure vessel dimensional data.

The vessel was designed, fabricated, and tested in accordance with the ASME Boiler and Pressure Vessel Code for Unfired Pressure Vessels, Section VIII, 1959 Revisions and Case Rulings. In addition, critical areas of the vessel, such as the vessel support skirt, superheated-steam nozzles, closure flanges and head, were examined and analyzed in accordance with the document, "Tentative Structural Design Basis for Reactor Pressure Vessels and Directly Associated Components," U.S. Dept. of Commerce, OTS Document No. PB151987. A summary of the reactor vessel design, fabrication, and test conditions is presented in Table 306-2. A summary of the reactor vessel stress analysis is contained in Fig. 306-4.

The reactor vessel is clad with 1/4 in. total of austenitic stainless steel deposited by the manual metal arc and the submerged arc automatic weld overlay processes. It uses two welding passes with bare electrodes per ASTM A 371-53T, ER-309 and ER-308L. The maximum unbonded area is less than 1 sq in. The entire surface of the clad is dye-penetrant inspected for cracks or fissures and ultrasonically tested for bond integrity. The carbon content of samples taken from the cladding is .06 per cent maximum. A summary of the chemical and physical properties of the materials of the reactor vessel is contained in Table 306-4 and 306-5.

The reactor pressure vessel shell consists of two cylindrical courses of 3-1/8-in. thick ASTM A 212 Gr B carbon steel. Each course is made up of two plates rolled and welded with two double-butt longitudinal seams; the two courses are joined to each other by a girth weld. The girth welds in the lower shell course are above and below the core region and the two longitudinal shell welds are located between the main axes of the core where the thermal neutron flux is the lowest. The top edge of the upper course is welded to the ASTM A 105 Gr II closure flange by means of a circumferential double butt weld.

All nozzles in the shell are located at an elevation 57 in. below the closure flange. These include the seven large and four small superheated steam outlet nozzles, the liquid level, the spare 2-in. nozzle and the pressure relief line nozzle. All are welded to the vessel by means of full penetration, fully radiographed welds.

The lower head of the reactor vessel is a 42-5/8 in. (IR) x 2-3/16 in. (thick) hemisphere and is joined to the bottom edge of the lower shell course by means of a full penetration girth weld. The Inconel section of the core support barrel is joined to the lower head by welding. This is used as a transition piece between the carbon steel of the reactor vessel and the stainless-steel core support barrel in order to reduce thermal stresses due to the different coefficients of expansion. The inlet and outlet reactor coolant nozzles, the feedwater nozzle, and one liquid level nozzle, are attached to the lower head by full penetration welds.

The upper or removable head of the vessel is a torospherical head of 5-in. thick ASTM A 212 Gr B material having a mean radius of 69-1/8 in. and a subtended arc of 54.3°. The edges of the dome section are double butt welded to the 93-3/4-in. OD x 76-in. ID x 11-in. thick head flange. The inside height of the head is 16 in. Twenty-one 3-1/4-in. holes are drilled in a square array into the dome section of the head to receive the 17 control rod and 4 instrument nozzles which are welded by means of partial penetration welds to the inside surface of the head. A 1-in. vent line and a 2-in. emergency cooling line are welded to the head.

The vessel closure consists of a bolted flange closure employing thirty-six 3-1/2 in. x 26 in. long stud bolts equally spaced, and the seal is maintained by two concentric,hollow,silver plated,metallic self-energized O-rings of AISI Type 304 material. The O-rings have a 0.034-in. thick wall; the inner ring has an outside diameter of 78.250 in., and the outer ring has a 80.250 in. outside diameter. Two 1-in. leak-off connections located on the 90-degree and 180-degree axes of the vessel are connected to the intervening annulus of the O-rings. Any leakage that may occur during operation is piped to the drain system. The closure bolts are initially stressed to 22,500 psi to prevent leakage through the gaskets during steady state or transient operation of the reactor.

The alignment of the head to the vessel during operation is obtained by enlarging the shank of three equally spaced closure bolts such that motion of the head is restricted to $\pm$ 1/16 inch. At installation, three centering pins are used in place of these bolts and the head is aligned initially to within 1/64 in. The centering pins are then removed and the bolts inserted for operation. The bolts are tightened by using four hydraulic bolt tensioners. Provision is made for use of bolt heaters if that method of tightening the bolts should be required; the bolts have a 1/2-in. ID hole drilled lengthwise through the center for this purpose.

Table 306-1 SUMMARY OF REACTOR VESSEL DATA

Vessel shape	Cylindrical
Vessel inside diameter, (ft)	7
Vessel over-all height (inside to inside), (ft-in.)	26-7
Vessel base metal wall thickness, in.	
Shell	3-1/8
Lower head	2-3/16
Upper head	5
Vessel cladding thickness, (in.)	1/4
Vessel shell material	Carbon Steel ASTM A 212 Gr B
Vessel cladding material	Austenitic Stainless Steel weld overlay
Vessel internal volume, (cu ft)	992
Thermal shield thickness, (in.)	1
Thermal shield material	Stainless Steel AISI Type 304

Table 306-2 SUMMARY OF REACTOR VESSEL DESIGN AND TEST CONDITIONS

Operating pressure, psig	950
Design pressure, psig	1150
Operating temperature, ^{o}F	540
Design temperature, ^{o}F	600
Design allowable membrane stress, psi	17,500
Design allowable membrane plus bending stress, psi	25,200
Welds	Full penetration, double butt
100% radiographic inspection of all pressure containing welds	Yes
Hydrostatic test pressure, psi	1725

The four hydraulically actuated bolt tensioners (Biach Industries, Inc., Model Size 1-15-4177) are single stage units each rated at 335,000 lb pull at 8000 psi pressure and each has a 1/2-in. stroke. The tensioner is approximately 23 inches in height and 9-1/2 inches in diameter. After applying the load to the bolt, the elongation in the bolt is measured, while the tensioner is in place, by an extensometer which extends through the center of the bolt tensioner; the change in length of the bolt establishes the stress level. The closure bolts are tightened four at a time on a symmetrical pattern to provide uniform seating of the closure gasket seal.

There are a total of 44 nozzles attached to the reactor presure vessel; 23 are in the closure head, and 21 are in the vessel shell. Their function, size, and location are given in Table 306-3.

All openings in the reactor vessel are provided with structural reinforcement in accordance with the ASME Boiler Code, Section VIII, and Nuclear Code Case 1273-N. Nozzle forging material is ASTM A 105 Gr II carbon steel. All nozzles with the exception of the control rod and instrumentation nozzles are connected to the vessel by means of full penetration welds. The control rod and instrumentation nozzles are connected to the head by means of partial penetration welds in accordance with Nuclear Code Case 1273-N. Nozzles A, B_1 and B_2 (see Fig. 306-1) are clad with 1/4 in. of weld deposited stainless steel. Nozzles E, H and I are clad on the inside with 1/4-in. thick Inconel weld overlay. Nozzles D_1, D_2, and M have 1/4-in. thick Type 304 stainless steel liners brazed to the inside surface using a copper bronze. Thermal sleeves, to protect the heavy sections of the nozzle during temperature transients, have been provided on the large and small superheated steam nozzles (H and I), the feedwater nozzle (E), and the emergency cooling inlet nozzle (N).

The superheated outlet steam nozzles posed a special problem in the design of the reactor pressure vessel. First of all, since they are designed to operate with 950°F steam it is necessary that the nozzles be thermally insulated from both the 540°F saturated steam and the reactor vessel pressure wall which is limited to 650°F maximum. Secondly it is a design objective to measure the power distribution in the operating superheater assemblies. Therefore, it is necessary to individually measure steam flow and temperature from a symmetrical portion of the superheater assemblies. To this end four superheater assemblies in the northwest octant of the core are provided with separate nozzles (I). The remaining 28 superheater assemblies are manifolded to seven superheated steam headers within the vessel in groups of four to each header; these headers exit through the seven "H" nozzles. Thus there are two types of superheated steam outlet nozzle designs, "H" and "I".

A detailed sectional view of nozzle "H" is shown in Fig. 306-5. The A105 Gr II nozzle forging is strength welded to the A 212 Gr B plate material. The inside diameter of the nozzle is overlaid with BP-87

Table 306-3 NOZZLE FUNCTION, QUANTITY, SIZE, AND LOCATION

Nozzle Function	Quantity	Connecting Pipe Size and Schedule	Connecting Pipe Material	Location
Recirculating water inlet (A)	1	16"-100S	ASTM A240 Type 304	Bottom head - center
Recirculating water outlet (B_1 & B_2)	2	12"-100S	ASTM A358 Type 304	Bottom head - 38° either side of vertical centerline
Feedwater inlet (E)	1	4"-80S	ASTM A312 Type 304	Bottom head - 45° from vertical centerline
Lower liquid level (D_2)	1	2"-80S	ASTM A312 Type 304	Bottom head - 45° from vertical centerline
Large superheated steam outlet (H)	7	3"-80	ASTM A182 F22	Vessel shell - 57 in. below gasket surface
Small superheated steam outlet (I)	4	2"-160	ASTM A182 F22	Vessel shell - 57 in. below gasket surface
Pressure relief (M)	1	6"-80	ASTM A106 Gr B	Vessel shell - 57 in. below gasket surface
Spare (C)	1	2"-80S	ASTM A312 Type 304	Vessel shell - 57 in. below gasket surface
Upper liquid level (D_1)	1	2"-80S	ASTM A312 Type 304	Vessel shell - 57 in. below gasket surface
Control rod (F)	17	3"-Dble-X	ASTM A182 Type 304	Removable head - square array pitch - 8.855 in. in center - 8.792 in. outer row
Instrumentation (L)	4	3"-Dble-X	ASTM A182 Type 304	Removable head - corner of pattern
Vent (G)	1	1"-80S	ASTM A182 Type 304	Removable head
Emergency coolant (N)	1	2"-80S	ASTM A182 Type 304	Removable head
Gasket leak-off (K)	2	1"-80S	ASTM A376 Type 304	Vessel shell flange - 90° and 180° positions

(Inconel) weld deposit 1/4 in. thick. A six inch long, 6-in. OD x 5-in. ID inconel nipple is welded to the end of the nozzle forging. This piece is sized to give sufficient thermal resistance to absorb the major axial temperature drop along the nozzle centerline. The outer end of the inconel nipple is welded to an inconel transition piece which joins to the 2-1/4% chromium-1% molybdenum reducer. The field weld to the steam piping is made between the Cr-Mo reducer and the Cr-Mo steam pipe. A 4-in. Schedule 40S Type 304 stainless steel nipple connects the inconel transition piece to the superheated steam header and forms an annular space with the inside diameter of the forging. Into this annular space is inserted 7 cylinders of .008 in. thick stainless steel foil which act as a part of the radial thermal barrier between the 900°F superheated steam and the nozzle forging. Within the 4-in. dia. Schedule 40S stainless nipple is a 3-in. dia. Schedule 10S thermal sleeve which completes the radial thermal barrier and maintains the pressure wall at or near the saturated steam temperature. (See Fig. 306-2.)

A detailed sectional view of the four small superheated steam outlet nozzles (I) is shown in Fig. 306-6. As previously mentioned these four nozzles permit the individual measurement of steam conditions from each of four typical superheater fuel assemblies. Because of the close pitch spacing of the small superheated steam nozzles, the required reinforcement for these openings is obtained by thickening the shell to 4-7/8 in. around all the "I" nozzles. This is accomplished by a 35-in. x 22-3/4-in. x 4-7/8-in. thick SA 105 Gr II forging which is welded into a cutout position in the upper shell course. The forging with the four nozzles in place is made up as a completed sub-assembly prior to welding into the vessel.

After boring the holes in the forging, the inside diameter of each hole is overlaid with 1/4-in. thick Inconel (BP 87). The 3-in. double extra heavy chrome-moly nozzle is strength welded to the forging and the chrome-moly reducer fitting is welded to the outer end of the nozzle. Pipe caps are welded to the reducer fittings for the hydrostatic pressure test on the vessel. These are subsequently removed and the field weld preparation on the reducer is made. Extending inward from the BP 87 overlay is a 2-1/2-in. Schedule 40 Inconel pipe which connects to a 2-1/2-in. Schedule 40S stainless steel elbow. Inconel is used as the transition piece between the carbon steel of the vessel and the stainless steel internals. Its intermediate temperature coefficient of expansion serves to reduce the thermal stress caused by joining carbon steel to stainless steel. Within the nozzle there is a 1-1/2-in. Schedule 10S Type 304 stainless steel thermal sleeve which insulates the pressure wall from the 900°F steam. To further insulate the forging from the high temperature steam, eight .008-in. thick cylindrical foils are inserted in the annulus between the thermal sleeve and the pressure wall.

Steady state temperature distributions and resulting stresses were calculated for the superheated steam outlet nozzles. The steady state temperature distribution for the superheated steam outlet nozzles "H" and "I" are given in Fig. 306-2. The maximum combined stress in nozzle "H" is calculated to be 19,620 psi.

B. Internal Shielding

The portion of the reactor vessel shell which is adjacent to the active core is protected against excessive radiation heating by a 1-in. thick, Type 304 stainless steel shield that is supported on lugs which are welded to the reactor vessel. The shield is 82-3/8 in. high and 79 in. inside diameter. The shield is made in three segments which are bolted and tack welded together with ship lap joints after installation in the vessel. The shield is cooled on the inside and the outside diameters by the circulating reactor coolant.

The maximum integrated fast-neutron flux received by any portion of the reactor vessel during a twenty year exposure is calculated to be 9.13×10^{18} nvt. For this amount of irradiation the change in nil ductility transition temperature of A212 Gr B material is estimated to be 180°F based upon experimental data presented by J. C. Wilson in USAEC Report ORNL-2829, p. 210, dated December 11, 1959. The vessel, therefore, at no time in its lifetime will be pressurized at a temperature which is equal to or lower than its transition temperature.

C. Vessel Support and Hold-Down

The vessel is supported and held down by a continuous 1-1/4-in. thick carbon steel skirt of SA-212 Gr B material. The skirt is attached to the vessel just below the elevation of the superheated steam outlet nozzles by means of a welded girth ring. The lower end of the skirt is welded in the field to the pad on the top surface of the neutron shield tank. The differential expansion of the reactor vessel and the neutron shield tank is absorbed in the skirt by bending. Calculations of the stresses in the skirt show that it can safely withstand the number of heat-up and cool-down cycles to which it is exposed in 25 years. A hole is drilled through the center of the skirt to permit passage of the vessel thermocouples. The support skirt is designed to be able to sustain a vertical upward force of 6,000,000 lb without fracture in the event of a complete brittle fracture of the reactor vessel. The vessel is brought plumb with the reactor centerline by means of shims at the lower edge of the support skirt prior to making the field weld to the neutron shield tank.

D. Internal Piping and Fixtures

All internals attached to the reactor vessel, except the core support barrel, are Type 304 stainless steel. A 4-in. Schedule 40S pipe ring with a 72-in. dia. flattened to an oval shape 5-1/2 in. by 3-1/2 in. serves as the feedwater spray ring. It is mounted to the thermal

shield by means of four welded brackets. The spray ring has 18 equally spaced 3/4-in. dia. drilled holes on the underside so as to distribute and direct the feedwater downward in the downcomer region. It is connected to the feedwater nozzle in the lower head by a 3-in. Schedule 40S pipe. Located on the south axis of the vessel within the circle described by the feedwater spray ring is a vertically mounted Charpy impact test specimen holder. The holder consists of a 1-1/4-in. Schedule 80S pipe 68 in. long into which are placed and sealed 120 Charpy V-notch test specimens taken from the main shell course material of the reactor vessel. The specimen holder rests in a socket of two brackets that are welded to the thermal shield, and can be removed to the fuel handling pool or to a hot cell for extracting the irradiated samples.

The core support barrel is composed of four pieces: a 3/4-in. thick upper flange, a 1/4-in. thick shim, a 1-in. thick x 20-in. high upper conical section of Type 304 stainless steel and a 1-in. thick x 8-in. high lower conical section of Inconel. The Inconel section acts as a weld transition piece between the stainless upper section and the carbon steel reactor vessel so that stresses due to differential expansion are minimized. The upper flange and shim are drilled with 12 obround holes to receive the T-bolt heads which hold the core structure in place. The shim, which is mechanically fastened to the upper flange, is used during vessel manufacture to bring the mating surface of the core support to the proper elevation in the vessel. Two 1-3/8-in. dia. alignment pins protrude 1-1/4 in. upward from the shim and flange on the northeast-southwest axis diametrically opposite one another. These pins fit into mating holes in the core plate, the holes having been made using a template supplied by the vessel vendor, and align the centerline of the core structure exactly with the centerline of the vessel. Retainer caps are welded underneath each T-bolt hole in the upper flange to retain the head of the T-bolt in the event the bolt head is inadvertently broken in operation or removal.

Sixteen Type 304 stainless-steel core sway lug brackets are welded to the vessel wall, eight brackets at each of two elevations. The core guide structure is mechanically fastened to these brackets for lateral support. Four emergency cooling line brackets are welded to the vessel at an elevation 18-1/4 in. below the vessel gasket surface. These brackets support the superheater emergency cooling header which is bolted to them.

Seven large superheated steam headers are mounted in the reactor vessel. These headers consist of 4-in. Schedule 40S Type 304 stainless steel pipe welded to the nozzles through an Inconel transition piece. The header is lined with a 3-in. Schedule 10S liner for thermal insulation of the 900°F steam which it conducts. Each header has four superheater connector flanges to which the superheater outlet standpipe connectors are attached. Each header contains a preheater flow orifice which provides the 3 psi pressure drop necessary to drive 1285 lb/hr superheated steam through each preheater. The 1-1/4-in. Schedule 40S

inlet and outlet preheater piping is welded to each header on the upstream and downstream side of the orifice, respectively. The preheater piping is lined with 1-1/4 OD x 14 ga. tubing for thermal-insulation purposes. Each of the seven superheater outlet steam headers is supported by means of a bracket. These brackets serve the multiple purpose of supporting the headers and the steam dryer/pre-heaters as well as being the main alignment surface for the reactor vessel internals. (See Fig. 306-5).

Four small superheated steam outlet pipes, 2-1/2-in. Schedule 40S, conduct the superheated steam from the northwest octant of the core, individually from each superheater assembly, to the four small super-heated steam outlet nozzles. One of these outlet pipes (nozzle I_1) contains a preheater flow orifice, and has inlet and outlet preheater piping attached to it as previously described. (See Fig. 306-6).

In addition to the bracket upon which it rests each dryer/preheater is bolted to and supported by two upper brackets that are welded to the lower edge of the reactor vessel flange.

A boiler emergency spray header is attached by four brackets to the underside of the reactor vessel closure head. Two of the brackets are welded to the header; the other two are mechanically fastened, and permit relative displacement between the head and spray header to take up differential expansion. The spray header consists of a square grid of 2-in. dia. Schedule 40S pipe with cross connections of 1-in. Schedule 40S pipe. Sixteen nozzles are spaced at even intervals on the piping grid through which the emergency coolant is directed on to the boiler region of the core in the event of accidental loss of reactor coolant. Each nozzle is designed to spread the spray to a circular area whose diameter is approximately twice the width of the guide structure box. A total of 60 gal/min is supplied to the boiler region of the core. Four holes are located one at each corner of the boiler spray header which supply a total of 40 gal/min coolant to the super-heater standpipes.

E. Thermocouples

Thirteen sets of thermocouples are affixed to the outside of the reactor vessel wall to measure the metal temperature and rate of change of temperature in critical regions of the vessel during steady state operation and slow transients (start-up and cool-down). The locations and the details of the thermocouple construction are shown in Fig. 306-7.

The thermocouples consist of 14-gage Iron-Constantan wire insulated with asbestos and are in accordance with MIL-W-5845, Type I, Class H. Twenty-three feet of excess thermocouple length is provided for each couple and this is passed through the south piping tunnel of the biological shield after vessel installation and connected to a junction point. Two thermocouples (an operating unit and one spare) are provided at each of the positions shown in Fig. 306-7.

Pads of A 212, Gr B steel are welded to the vessel at the thermocouple position. After stress relief of the vessel the thermocouples are mounted to the pads as shown and silver-soldered in place. The cover plates are welded in place and the excess length of thermocouple wires are banded about the vessel for shipment.

The thermocouples have an accuracy of $\pm$ 2°F over the range of -94°F to 572°F.

F. Steam Dryer/Preheater

Four steam dryer/preheater units are mounted in the reactor vessel upper dome region for the purpose of removing all moisture from the saturated steam before it enters the superheater region of the core. Each steam dryer/preheater unit consists of a box-like structure 38-1/2 in. x 35-3/16 in. x 9-3/4 in. attached by brackets to the inner wall of the reactor vessel above the superheated steam outlet nozzles but below the elevation of the shell flange. Each dryer/preheater consists of, 1) a structure, 2) two preheater units with attached inlet and outlet pipes, and 3) six dryer units (see Fig. 306-3).

Saturated steam from the dome region of the reactor vessel containing 2 per cent moisture or less enters each of the four steam dryers radially through the six dryer units which are welded into the upper front face of the dryer structure. As the steam passes between the corrugated plates of these units the moisture is removed by impingement upon the plate surface. The moisture gathers in droplets, streams down the plates into the trough, and returns through the drain pipe to the reactor vessel. The emerging saturated steam is designed to have a maximum of 0.1 per cent moisture at this point. It then passes down through the baffle structure across the tubes of the preheater elements where it is preheated to 2-1/2°F of superheat; the preheating removes the final trace of moisture. The slightly superheated steam, after passing through a crud particle trap, in the bottom of the dryer structure, enters the superheater inlet standpipes, and goes to the nuclear superheat region of the core. The preheater is heated by a portion of the 900°F superheated steam emerging from the nuclear superheater. This portion is bypassed to each preheater by means of an orifice located in each of the seven large and one small superheated steam outlet headers. A list of design parameters for the steam dryer/preheater is given in Table 306-6.

The dryer/preheater is designed to be removable from the reactor vessel. Two lifting lugs with 1-1/2-in. dia. holes are welded to the top plate. Quick opening disconnect flanges are provided in the four preheater piping connections of each dryer assembly. These connections employ a modified "Conoseal" gasket arrangement which seals against the 79 psi external pressure. There are also two support lugs welded to the top plate through which pass two 1-in. dia. locking bolts which lock the dryer to the vessel shell flange. On the lower surface of the dryer structure are two pins, 1 in. dia. and 1.315 in. dia., which locate the dryer on the lower support brackets. The 1.315-in. dia. pin is a hollow pipe, and serves also as the drain pipe for de-entrained

water. A preheater inspection opening with a removable cover plate is provided for viewing the external surface of the preheater tubes for corrosion products or crud buildup.

G. Thermal Insulation

The minimum thermal insulation for all portions of the reactor vessel is the equivalent of 3-1/2 in. of material having a thermal conductivity of 0.40 Btu-in./sq ft-°F at a mean temperature of 320°F for the design life of 25 years. The insulation consists of two 1-3/4-in. thick layers of unbonded fiberglass in accordance with Federal Specification HH-I-563 Type I, class B. The fiberglass has a density of 4.5 lb/cu ft and contains 10 per cent boron oxide by weight. The insulation is held in blanket form by 1-in. hexagonal wire mesh of galvanized carbon steel wire.

The insulation is either removable or nonremovable depending upon its position on the reactor vessel. The removable portions cover the closure bolts, nuts and washers and the area outside of a 36 in. radius on the reactor vessel head. In addition removable insulation is provided at each piping and control housing flange connection on the closure head. The remainder of the insulation is nonremovable. All removable insulation is waterproofed with a single dip of Dow Corning DC966 having 9.6 per cent solids.

The insulation in the region below the reactor vessel support skirt is not affixed to the reactor vessel but instead is permanently attached to the inner wall of the annular neutron shield tank. A 1/4-in. thick inner liner holds the insulation in place on the neutron shield tank and protects it from scuffing and abrasion during shipment and installation. Insulation for the lower head of the vessel is obtained by placing the fiberglass blankets on top of the bottom shield plug prior to lowering the vessel in place.

The insulation on the inside and outside of the vessel support skirt is impaled upon studs that are welded to the skirt in a square array. The nonremovable insulation above the reactor vessel skirt is bound to the vessel by means of stainless steel straps. No welding is done to the vessel wall. The nonremovable insulation on the reactor vessel head is covered with a 3/16-in. thick stainless steel cover plate which firmly holds the insulation in place and protects it during refueling and maintenance operations.

Table 306-4 PHYSICAL PROPERTIES, BONUS REACTOR VESSEL MATERIALS

Location in Vessel	Material Specification	Tensile Strength (psi)	Yield Strength (psi)	Elongation % in 2"	Red.in Area %	Charpy V-notch Impact Value at +10°F (ft-lb)	Source of Material	Mill Order	Identifying No.	Date Inspected	Remarks
Head & Shell	ASTM A105 Gr II	76500 79500	50,000 52,500	28.4 27.8	69.5 65.4	26-27.5-18.5 22.5-22-20.5	Midvale-Heppenstall	411-074	PV-3747	6/8/61	As Forged " "
Flanges		70000	36,000	22	-	-		411-074	PV-3747	4/17/61	57,000 lb ingot
Inlet & Outlet Recirc. Water Noz.	"	72250	48,000	33.0	53.0	42	Isaacson	1550	1029	5/23/61	Forging
Nozzles D & E	"	81500	56,250	28.0	56.3	40	Isaacson	1550	1029	6/8/61	Forging
Top Head	A212-Gr B	79100	42,200	28.0	-	23-25-27	Lukens Steel	24038-2 2250-5010C	A3151-4	6/22/61	Dished head 70-3/4" OD x 5" thk.
Lower Shell	"	80200	49,500	30	-	24-24-29	"	24037-1	A-2978-9	5/3/61	Plate 149"x 130"x 3-1/8"
"	"	80700	50,800	33	-	29-28-31	"	24037-1	A-2978-10	5/3/61	Plate 149"x 130"x 3-1/8"
Bottom Head	"	84100	52,900	28	-	16-20-16	"	24038-1	22422	3/29/61	Hemi-Head 85-1/4" ID x 2-3/16"

Table 306-5 CHEMICAL ANALYSES OF BONUS REACTOR VESSEL MATERIALS

Location in Vessel	Material Specification	Manuf. Heat No.	Chemical Analysis										
			C	Mn	P	S	Si	Ni	Cr	Cu	Sn	Al	Mo
Head and Shell Flange	ASTM A105 GR II	Midvale Heppenstall, PV-3747	.30	.69	.010	.015	.16	.06	.16			.01	
Inlet & Outlet Recirc. Nozzles	"	Isaacson 1550-1029	.29	.76	.011	.016	.26	.24	.15	.15	.014		.06
Feedwater Nozzle	"	"	.29	.76	.011	.016	.26	.24	.15	.15	.014		.06
Top Head	ASTM A212 Gr B	Lukens A3151-4	.26	.75	.013	.023	.24					Al Trtd.	
Upper Shell Course (C_2)	"	Lukens 20705-2	.27	.73	.011	.030	.25					"	
Lower Shell Course (C_1)	"	Lukens A2978-9 & 10	.26	.80	.012	.033	.24					"	
Bottom Hemi-Head	"	Lukens 22422	.26	.74	.010	.029	.21					"	

Table 306-6 STEAM DRYER/PREHEATER DESIGN DATA

Over-all (box) dimensions, in.	38-1/2 x 35-3/16 x 9-3/4
Dryweight installed, lb	520
Material	
Structure	AISI Type 304 stainless steel
H-X tubes	Inconel
Design temperature, °F	
Dryer inlet	540
Dryer outlet	542.5
Preheater inlet	900
Preheater outlet	806
Design external pressure, psi	
Structure	2
Preheater	200
Moisture at dryer inlet	2% by weight
Moisture at dryer outlet	0.1% by weight
Steam flow rate, lb/hr	152,000 (four units)
Effective heat-transfer area, sq ft	16.72 (eight units) (50% of actual)
Superheated-steam flow rate, lb/hr	10,270
Velocity through separator plate, ft/sec	2.5
Velocity across preheater tubes, ft/sec	16.7
Velocity through preheater tubes, ft/sec	25.8
Velocity through preheater connector pipes, ft/sec	44.7
Total pressure drop through preheater, psi	3
Total pressure drop through dryer, psi	1

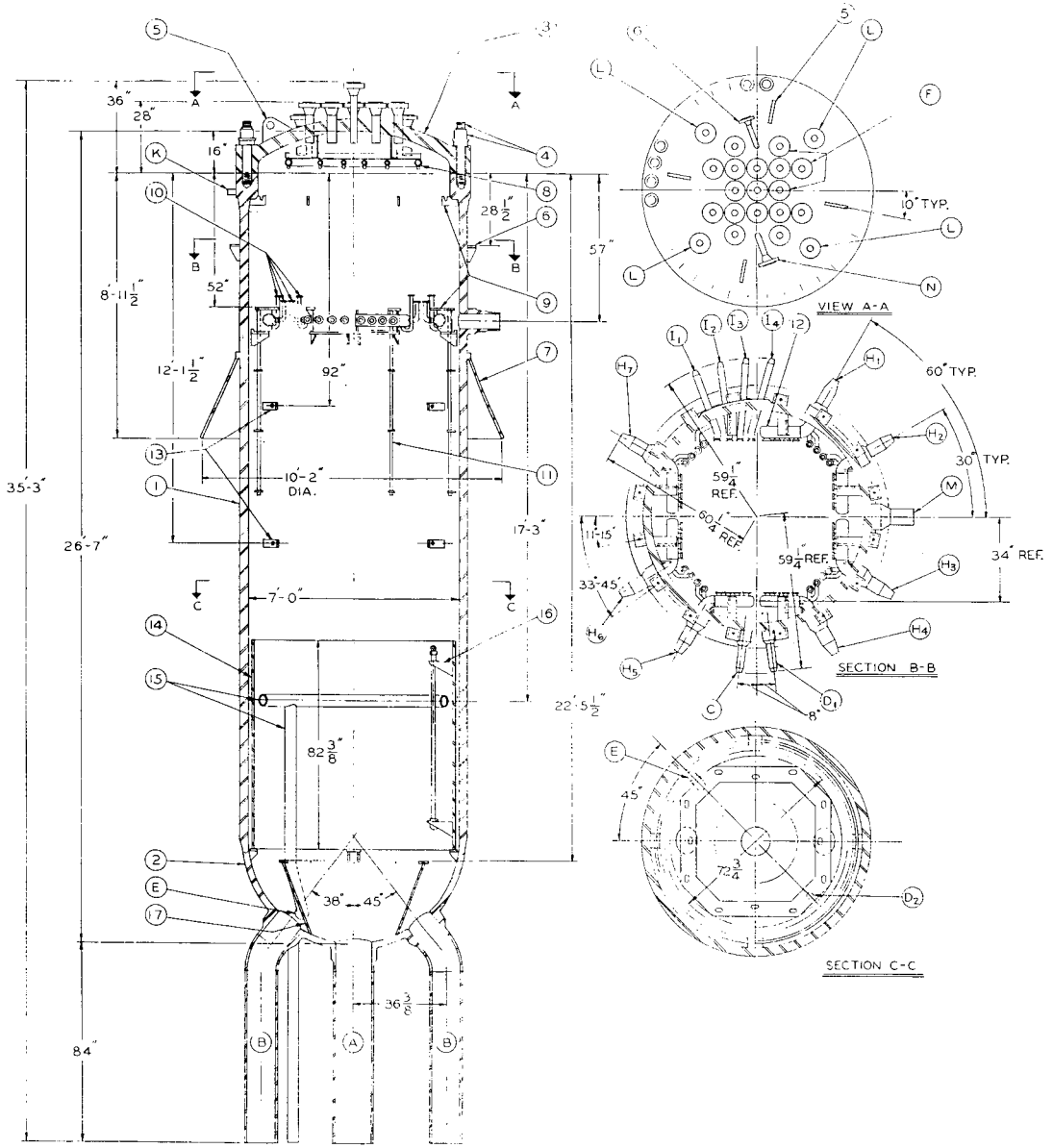

KEY

1. Vessel Shell
2. Bottom Head
3. Closure Head
4. Closure Bolts, Nuts, and Washers
5. Lifting Lugs
6. Shot Trough Support Lugs
7. Vessel Support Skirt
8. Boiler Spray Header
9. Dryer/Preheater Support Brackets
10. Preheater Piping
11. Dryer Drain Pipe
12. Superheated Outlet Steam Header
13. Core Sway Lugs
14. Thermal Shield
15. Feedwater Ring and Pipe
16. Charpy Impact Specimen Holder
17. Core Support Barrel

NOZZLE LIST

A. Recirculating Water Inlet
B. Recirculating Water Outlet
C. Spare 2"
D. Liquid Level
E. Feedwater
F. Control Rod
G. Steam Dome Vent
H. Large Superheated Steam Outlet
I. Small Superheated Steam Outlet
K. Gasket Leakoff
L. Instrument
M. Pressure Relief
N. Emergency Cooling

Fig. 306-1 Reactor pressure vessel.

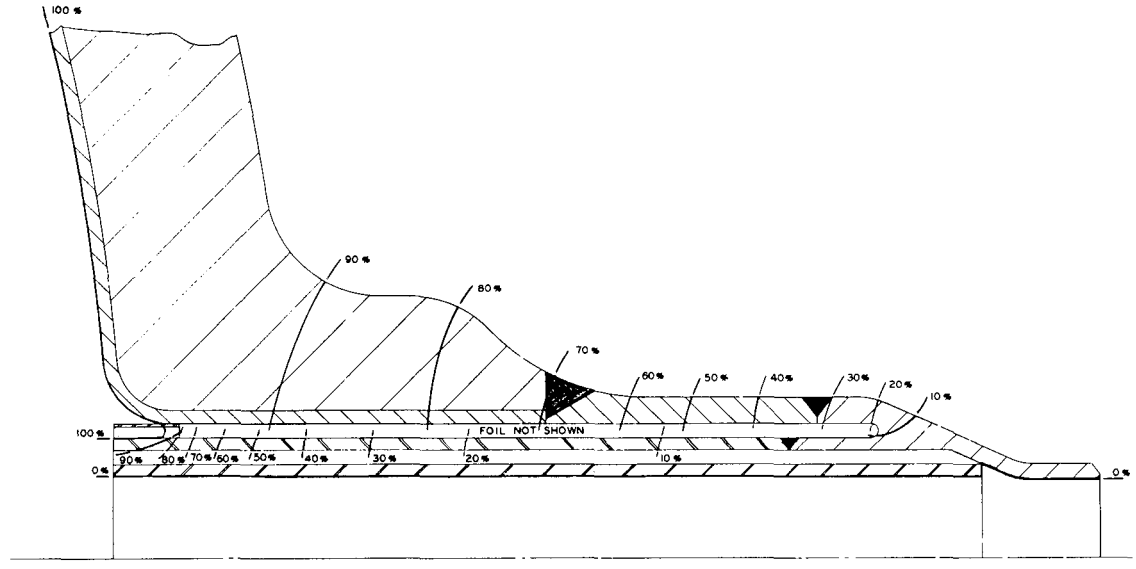

STEADY STATE TEMPERATURE ISOTHERMS, NOZZLE H

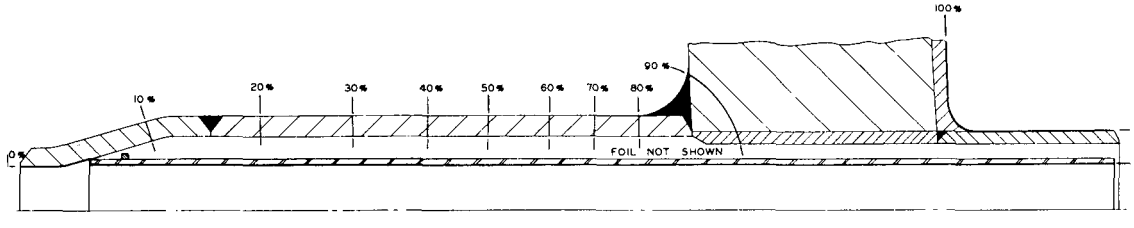

STEADY STATE TEMPERATURE ISOTHERMS, NOZZLE I

Fig. 306-2 Temperature distribution for the large superheated-steam outlet nozzle "H" and outlet nozzle "I". Temperature distribution shown as per cent of total Δt. $\Delta t = 950^{\circ}F - 540^{\circ}F = 410^{\circ}F$.

KEY

1. Corrugated Dryer Plates
2. Removeable Preheater
3. Superheated Steam Header
4. Inlets to Superheater Fuel Assemblies
5. Outlets from Superheater Fuel Assemblies
6. Preheater Pipe Couplings
7. Removed Moisture Drain Pipe
8. Dryer/Preheater Support Brackets
9. Lifting Lugs
10. Inspection Cover Plate

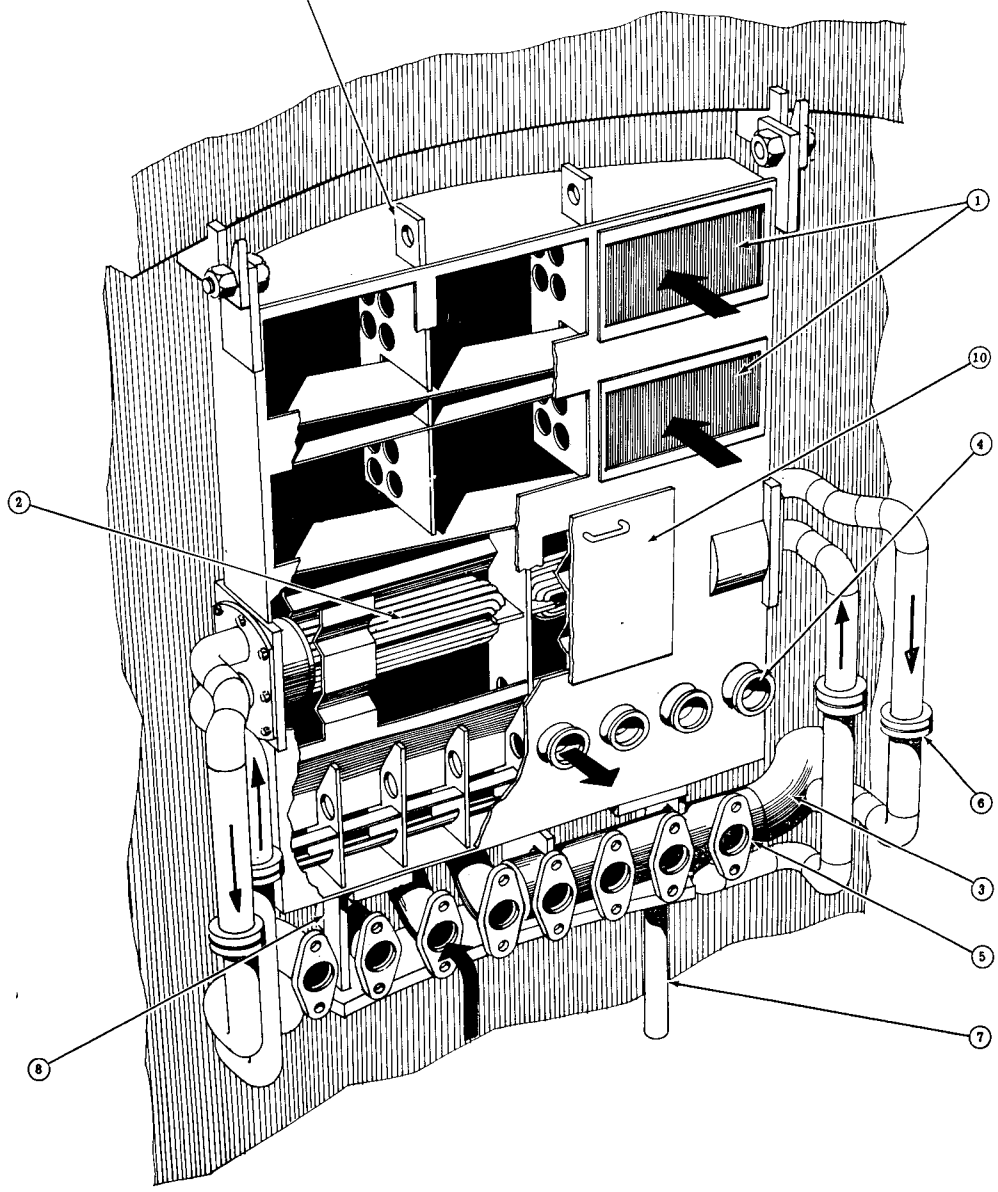

Fig. 306-3 Dryer/preheater.

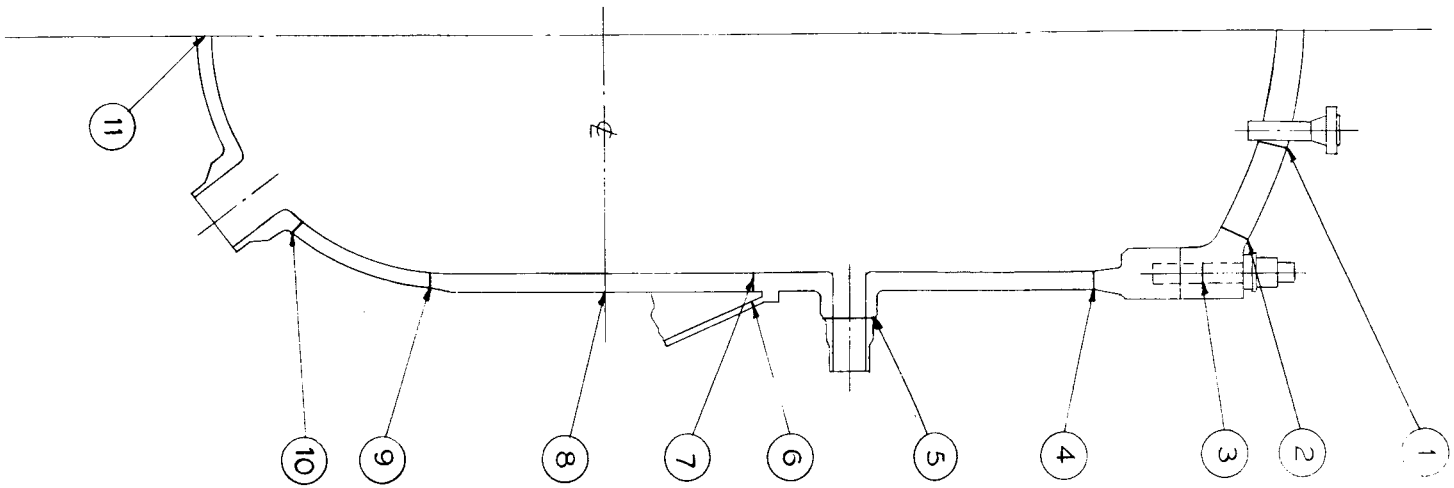

SUMMARY OF STRESS ANALYSIS

BONUS REACTOR PRESSURE VESSEL

POSITION IDENTIFICATION	1	2	3	4	5	6	7	8	9	10	11	REMA
S_M - Membrane Stress, psi	12,400	7,790	19,650	≤16,250	3,160	--	16,250	16,250	11,310	11,310	20,520	See Note
S_D - Discontinuity Stress, psi	23,000	15,700	40,500	≤18,620	16,460	≤25,200 ≤61,400*	19,410	23,750	≤17,820	≤20,520	20,520	See Note (*Accident condition (see Note (
S_{Alt} - Alternating Stress (Stress Intensity) psi	≤66,000	N.E.	≤75,000	N.E.	N.E.	≤78,500	N.E.	N.E.	N.E.	N.E.	N.E.	See Note (d)
U - Fatigue Damage Factor	--	--	≤ 0.40	--	--	≤ 0.47	--	--	--	--	--	$U_{Allowable}$ =
Integrated Fast Neutron Flux (nvt)	--	--	--	--	3×10^{11}	3.16×10^{11}	--	9.13×10^{18}	1.49×10^{18}	1.5×10^{16}	8.39×10^{14}	

NOTES:

(a) Allowable S_M for SA212 Gr B and SA105 Gr II steels at 650°F = 17,500 psi
Allowable S_M for AISI 4340 bolt material at 125,000 tensile strength = 29,000 psi

(b) Allowable S_D for SA212 Gr B and SA105 Gr II steels at 650°F = 0.9 x yield stress = 25,200 psi

(c) Allowable S_D in the vessel skirt for accident condition = 0.9 x ultimate stress = 63,000 psi

(d) These fatigue stresses were not evaluated where stress concentrations and discontinuity stresses are low because the combination of mechanical and thermal transient stresses could not approach the 66,000 psi allowed in the "Tent... Design Basis" for the vessel material for 500 cycles of start-up from cold condition.

Fig. 306-4 Stress analysis summary on the BONUS reactor vessel.

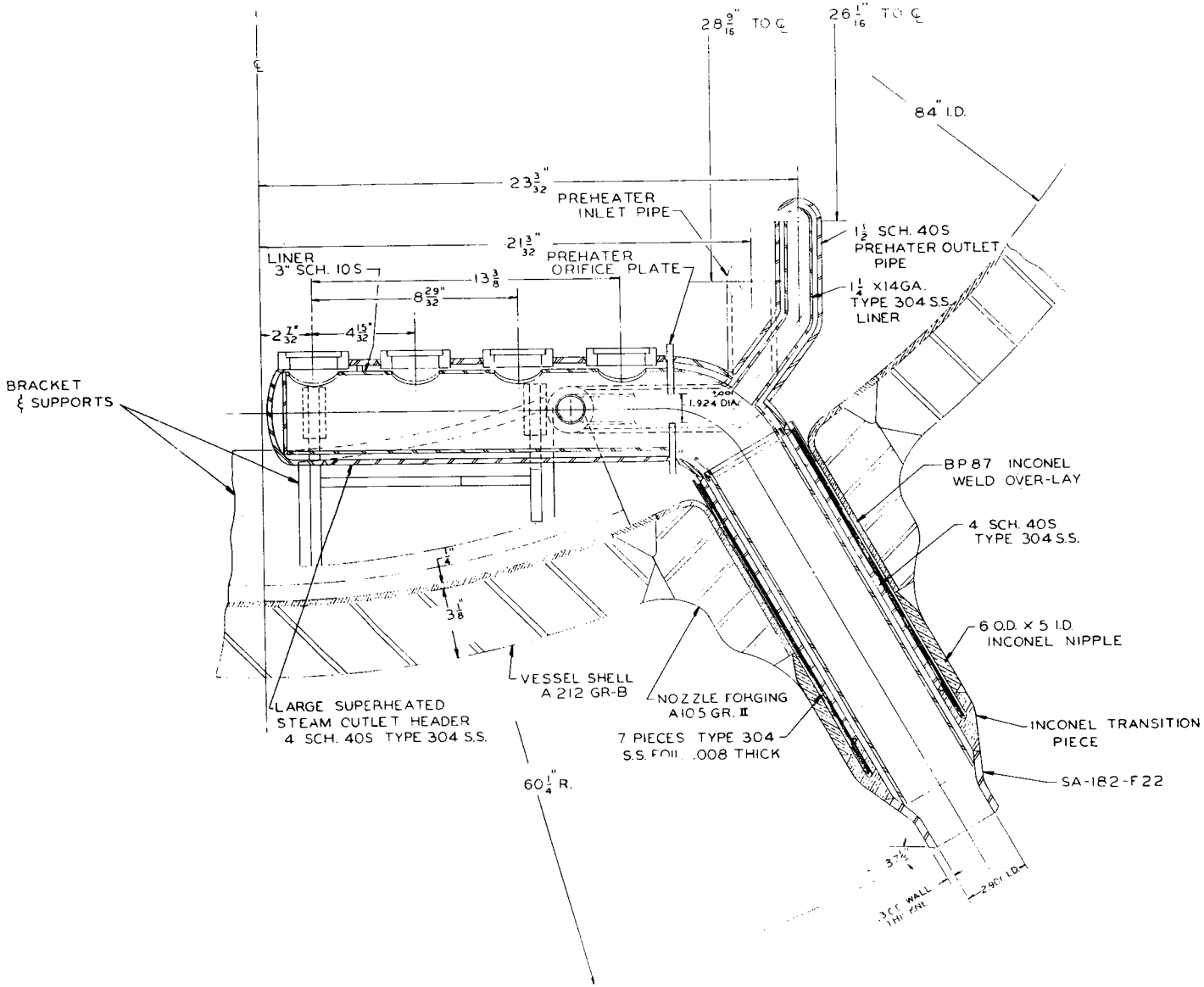

Fig. 306-5 Horizontal section of large superheated steam outlet nozzle "H".

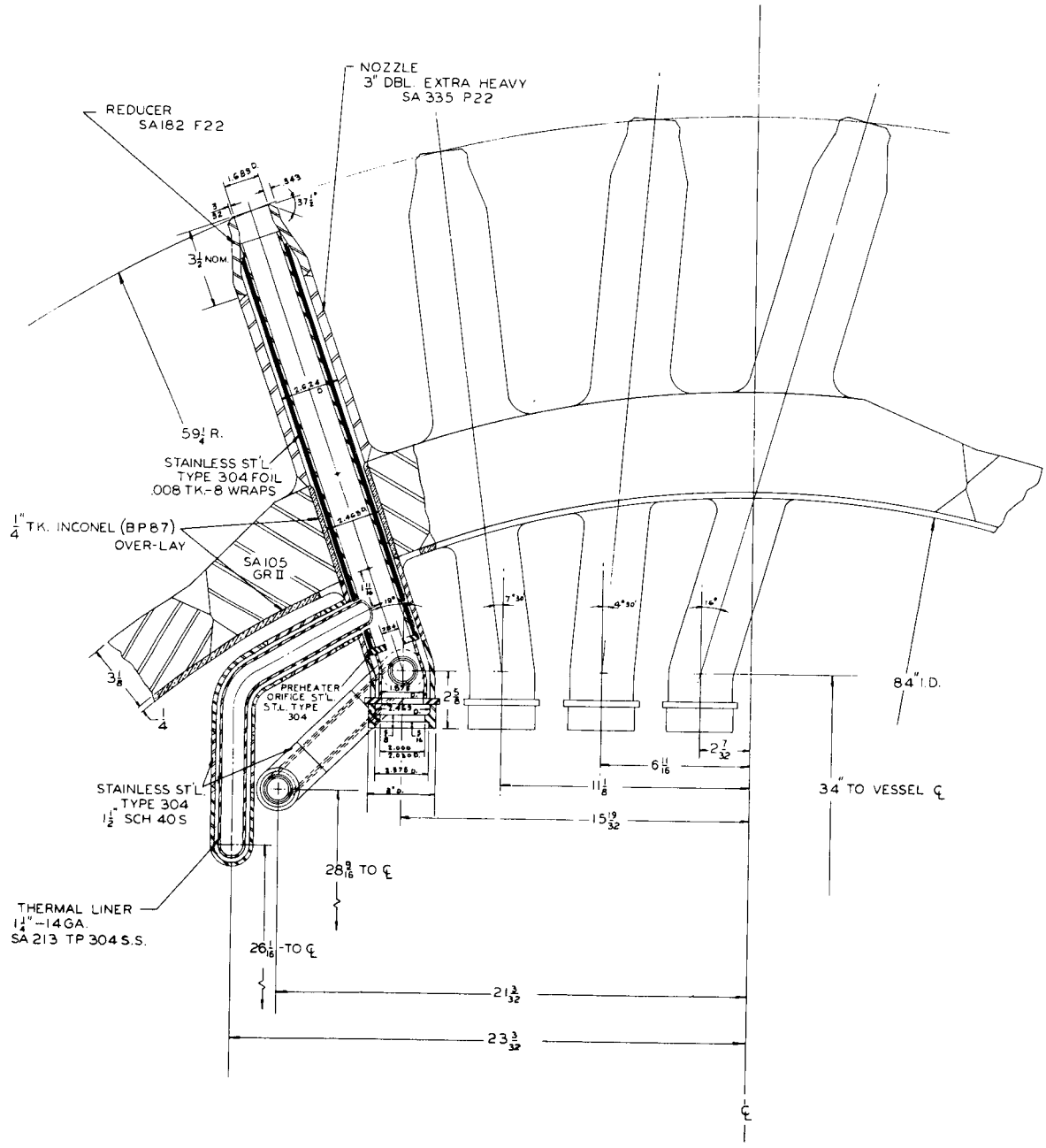

Fig. 306-6 Small superheated steam outlet nozzles (I).

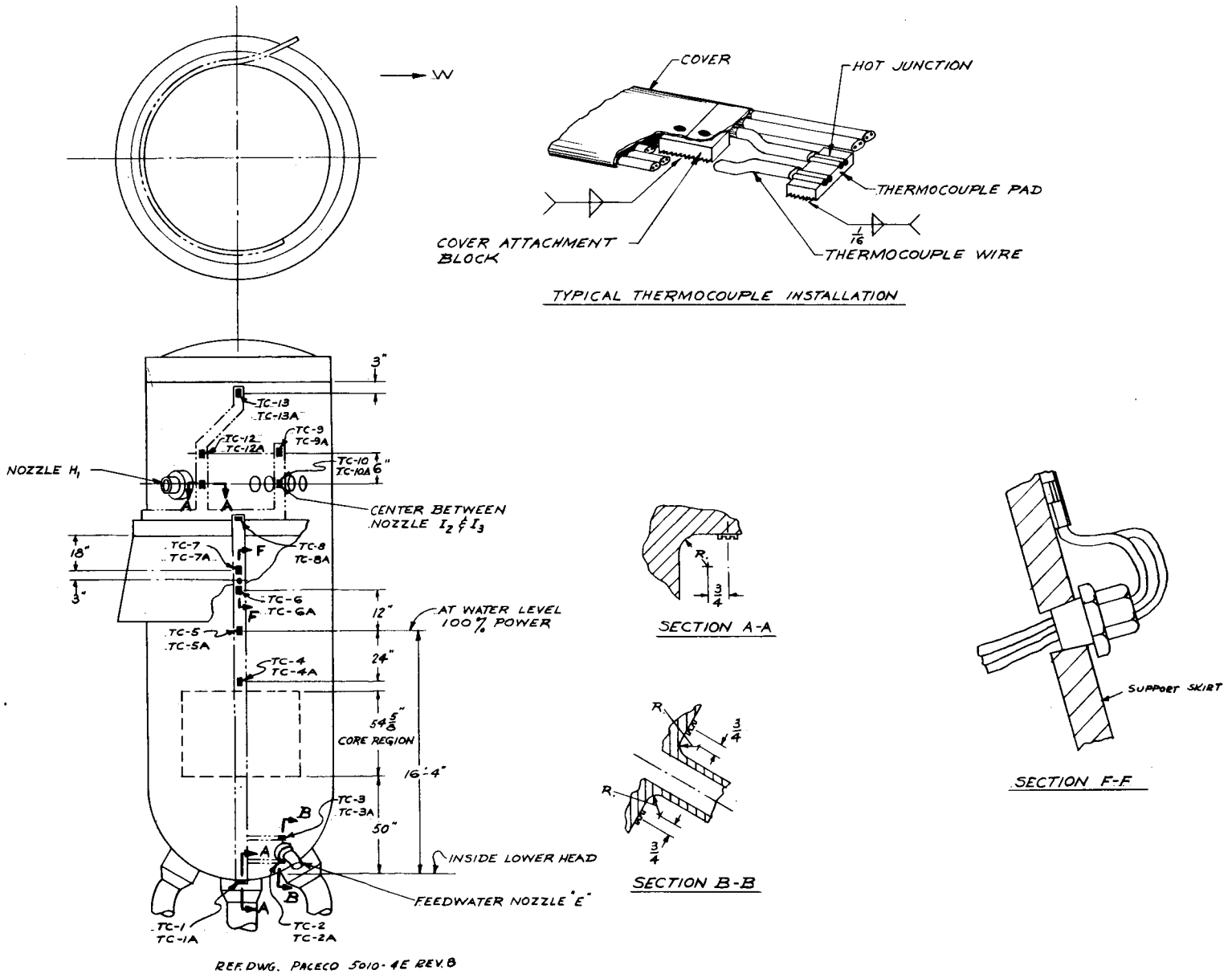

Fig. 306-7 Location and details of thermocouples attached to reactor pressure vessel.

307. CONTROL-ROD DRIVE SYSTEM

A. General

The reactor power level and superheat temperature are regulated by seventeen top mounted control-rod drive units which position the nine cruciform-type control rods in the boiler region and the eight slab-type control rods between the boiler region and the superheater region. The control-rod drive units are the mechanical rack-and-pinion type and operate through the reactor pressure vessel head cover flange. The angular orientation of the seventeen drive units in plan view is shown in Fig. 307-1. Figure 308-2 shows a perspective view of the seventeen shielded assemblies. The portion of the drive unit that is flange mounted to the control-rod thimble on the reactor vessel head is designated as the "rod-actuator assembly" and the portion that is located in the annular drive-motor trench is designated as the "drive-motor assembly." Included as part of the drive-motor assembly is the drive shaft which connects the drive-motor assembly to the rod-actuator assembly.

The details of the rod-actuator assembly are shown in Fig. 307-2. In general, each assembly consists of: 1) a rack with extension shaft and disconnect fitting to permit coupling to and uncoupling from the control rod; 2) a pinion and pinion shaft which imparts linear motion to the rack; 3) a rack guide bushing which provides the vertical alignment of the rack and positive engagement of the rack teeth with the pinion teeth; 4) a rotary, high-pressure, low-friction seal on the pinion shaft; 5) a pinion housing; 6) an upper pressure housing in which the rack extends; 7) a flanged seal pressure housing which contains the seal shaft with guide bushings and rotary seal; 8) a rack snubber mechanism (emergency shock absorber) located in the pinion housing; 9) and the seal water injection and leakoff lines. The pressure portions of the rod-actuator assembly are designed in accordance with the ASME Boiler and Pressure Vessel Code Section VIII, 1959 edition and fabricated from austenitic type 304 stainless steel.

Details of the drive-motor assembly are shown on Fig. 307-3. In general, each assembly consists of: 1) a drive shaft with couplings to connect the pinion shaft of the rod-actuator assembly to the output shaft of the drive-motor assembly; 2) an electromagnetic clutch to disengage the output shaft from the drive motor during a control-rod scram; 3) a mechanical unidirectional overrunning clutch in parallel with the electromagnetic clutch; 4) a hydraulic deceleration device (main shock absorber) to dampen the control-rod motion during a scram; 5) a gear train with changeable gear ratio; 6) a single-phase, 60-cps, 1/15-hp, instant-reversing drive motor; 7) a limit switch assembly driven from the output shaft; and 8) the control-rod position transmitters driven from the output shaft.

The control-rod drive system and the rod-position indicators have been designed, fabricated, and tested by AMF Atomics, a division of American Machine and Foundry Company. Figure 307-4 shows a view of a typical rod-position indicator module mounted in Section H of the Main Control Panel (Fig. 803B-9).

B. Rod-Actuator Assembly

1. General

The connection of each rod-actuator assembly to the pressure vessel cover flange control-rod thimble is made with five 1-inch-diameter, 8NC stud bolts as shown in Fig. 307-2. The gaskets between the pinion housings and the control-rod thimble flanges are spiral-wound, asbestos-filled type.

The nine rod-actuator assemblies for the cruciform control rods in the boiler region are located on a 8.855-inch square pitch lattice, as shown in Fig. 307-1. The eight rod-actuator assemblies for the slab control rods are located at the boundary between the boiler and superheater regions. The vertical elevation of the rod-actuator pinion shafts is the same except for the central assembly; the two elevations are 66 ft, 1 in. and 66 ft, 9 in., respectively, when the reactor vessel is at room temperature. When the reactor is at operating temperature ($540^{\circ}F$), the thermal expansion of the reactor vessel increases these elevations by approximately 1/2 in. The drive-motor assemblies are shimmed in position to the hot-operating condition so that all drive shafts are horizontal.

Each rod-actuator assembly is exposed to the reactor-vessel environmental conditions existing inside the steam dome and outside in the rod-actuator space. At full-power, the following conditions exist in the steam dome:

a)	Saturated steam	$540^{\circ}F$ at 950 psig
b)	Thermal-neutron level	$10^{6} n/cm^{2}/sec$
c)	Fast-neutron level	$10^{5} n/cm^{2}/sec$
d)	Gamma radiation level	9000 rad/hr

The following corresponding conditions exist outside the insulated upper head of the reactor pressure vessel within the shielded and ventilated rod-actuator space:

a)	Normal range of air temperature	100 to $200^{\circ}F$
b)	Maximum air temperature	$300^{\circ}F$
c)	Gamma radiation level	Approximately 240 rad/hr directly above and at the surface of the vessel head

During rod-actuator disassembly (reactor shutdown), the following conditions exist in the reactor vessel:

a)	Water and water vapor	120°F at atmospheric pressure
b)	Gamma radiation level	10-45 mr/hr (maximum)

and the following conditions outside the rod-actuators:

a)	Air temperature	80°F to 120°F
b)	Gamma radiation level	2.5 mr/hr (maximum)

In addition to the seventeen operating control-rod drive units, one complete drive unit is stored as a spare.

2. Rack

The rack, shown in Fig. 307-2, is fabricated from a solid rod of heat-treated (H 1100) 17-4PH stainless steel. The rack has 12, 20-degree-pressure-angle gear teeth per inch. The upper end of the rack is threaded to accommodate the snubber nut which is part of the emergency shock absorber and which is also an absolute mechanical stop. As indicated in Fig. 307-5, the rack has a sliding section that has a 2-in. total travel in the grooved track. The function of this sliding or floating rack section is to permit a 2-in. (maximum) vertical movement of the rack during decoupling or coupling of the control rod without losing engagement between the rack and pinion. The detailed operation of the floating rack section is described in Subsection 307-D, Control Rod Disconnect Procedure. As indicated in Fig. 307-2 and Fig. 307-5, the rack has a 13/32-inch-diameter full-length concentric hole. A 3/8-inch-diameter push rod is located in this hole and is used to decouple and couple the control rod. The rack and pinion are held in engagement by a graphitar rack guide bushing which allows the rack to float in a radial direction so that each tooth is evenly loaded across its face. The rack guide bushing also provides vertical alignment of the rack.

3. Pinion and Pinion Shaft

The pinion has 12 teeth per inch of pitch diameter; the gear tooth pressure angle is 20-degrees, and the pitch diameter 0.833 inch. The integral pinion-pinion shaft is fabricated from heat-treated (H 1100) 17-4PH stainless steel bar. The pinion shaft is supported on each side of the pinion by a graphitar bearing. These bearings are totally supported in metallic housings to prevent shock loading.

4. High-Pressure Seal and Seal Shaft

A pressure-breakdown type of rotary seal is utilized to maintain the leakage at a minimum. The seal shaft is fabricated from heat-treated (H 1100) 17-4PH stainless steel, chrome plated to improve wear resistance (industrial hard chrome, 0.0018 - 0.0022 in. thick). The

seal shaft has internal splines on one end for connection to the pinion shaft and has a key-way on the other end for connection to the flexible coupling on the drive shaft. The seal shaft is supported at its high-pressure end by a graphitar guide bushing and is supported at its low-pressure end by a double-ball thrust-bearing assembly.

The seal consists of six floating seal rings with a diametral clearance between seal shaft and rings of 0.006 to 0.0012 in. Each seal is cooled by the flow of 0.177 gpm of demineralized water at 140°F supplied by the seal water system (Section 415) which is introduced into the seal housing on the high-pressure side of the seal. Approximately 25 per cent of the total flow passes into the reactor vessel, and the remainder leaks through the seal leak-off and is collected in the float-controlled seal water collection tank prior to discharge to the condenser (refer to Fig. 506-1).

C. Drive-Motor Assembly

1. General

The layout of the seventeen drive-motor assemblies is shown in Fig. 307-1. Each assembly is mounted on an adjustable metal base plate in the annular drive-motor trench and is enclosed in a splash-proof cover containing a plastic inspection window. Each drive shaft, which connects a drive-motor assembly with a rod-actuator assembly, passes through a hole in the wall of removable biological shield No. 3 that separates the rod-actuator compartment from the drive-motor trench (see Fig. 308-3).

At reactor full-power, the following conditions exist in the drive-motor trench:

a)	Normal range of air temperature	80°F to 120°F
b)	Maximum air temperature	150°F
c)	Maximum relative humidity	95%
d)	Gamma radiation level	Approximately 5-10 mr/hr

When the reactor is shut down, the temperature and humidity conditions are not as high as during reactor operation and the gamma radiation level is negligible.

2. Electromagnetic Clutch and Mechanical Clutch

As indicated in Fig. 307-3, the decoupling of the rod-actuator assembly from the drive-motor during a gravity scram is accomplished with the 90 volt d-c Maxitorq electromagnetic clutch. Actuator scramming results by removing the voltage from the clutch coil which allows the output shaft to rotate freely with respect to the drive-motor gear train, thus permitting the control rod and rack to descend vertically into the core by gravity. Figure 307-6 shows schematically the electric control circuit for the electromagnetic clutches.

A Morse unidirectional cam clutch is connected to the actuator shaft as shown in Fig. 307-3. This mechanical clutch prevents rod bounce when the control rod reaches the full-in limit during a gravity scram. It also allows the control rod to be motor driven downward in the event that the rod does not reach the full-in limit during a gravity scram. In addition, the clutch prevents the rack from moving in the upward (out-of-core) direction when disconnecting the control rod.

3. Shock Absorber

The damping of the control-rod motion in the last few inches of travel during a gravity scram is obtained with a rotary-vane-type shock absorber. A spur gear connects the output shaft to a ball nut and screw combination used to actuate the shock absorber. As the control rod reaches the last few inches of travel, the ball nut face contacts the face of the rotary portion of the shock absorber and causes a vane within the fixed hydraulic oil chamber to rotate in the oil bath. The necessary deceleration is accomplished within a 270-degree stroke of the damper. A clock-type spring is used to return and hold the shock absorber in the cocked position after the control rod is moved off of the full-in position. The shock absorber is adjusted so that its in-limit position coincides with the control-rod down (full-in) position. An adjustable full-up (full-out) limit stop is also provided on the shock absorber mechanism. The control-rod up and down electrical limit switches are set to operate before the mechanical stops.

As mentioned previously, an emergency shock absorber is located inside the pinion housing. This auxiliary shock absorber consists of a set of Belleville spring washers capable of absorbing the energy of the rack and control rod during a gravity scram. It is not normally used, but comes into use in the event of a failure of the main shock absorber. Rod bounce is eliminated by the mechanical unidirectional clutch should this shock absorber be used.

4. Drive Motor and Gear Train

Each drive motor is a 1/15-hp, 1500-rpm, 115-volt, 60-cycle single-phase, split-capacitor, equal-field, instant-reversing motor. The drive motor is connected to the output shaft through a gear train which includes an irreversible reducer gear to prevent the control rod from creeping after the motor is stopped. By substituting four specific sizes of reducer gears in the gear train, the rack speed may be changed accordingly as follows: 5.90 in./min, 8.85 in./min, 11.8 in./min, and 17.7 in./min. The design rack speed for all rods is 8.85 in./min which limits the reactivity addition to approximately 0.01% k_{eff}/sec for the maximum-worth control rod at 540°F moderator temperature. The other forementioned rack speeds are designed into the system to permit start-up tests of the control rods and to permit future testing at lower and higher rod drive speeds.

5. Rod Position Indicator System

The coarse vertical position of each control rod is indicated remotely on the Main Control Panel on a vertical-scale indicator (Instruments 606A-J and 607-H on Fig. 803B-9) driven by a synchro transmitter-receiver system. In addition, the fine position of each control rod is also indicated on the same instrument on a numerical drum-type readout which is controlled by a separate synchro transmitter-receiver system.

Two synchro transmitters are mounted on the output shaft of the drive-motor assembly as shown in Fig. 307-3. The transmitters are geared mechanically to the pinion shaft, and rotate with the pinion shaft during a scram. A set of bevel gears is used to drive the synchro transmitter gear train. The coarse position synchro transmitter is geared so that a one-half revolution of the unit represents 60 inches of rack travel; the fine position synchro transmitter is geared so that one full revolution of the synchro represents 10 inches of rack travel.

The vertical tape readout for coarse position indication is accurate to within $\pm$ 0.5 inch of the actual control-rod position. The numerical drum readout for fine position indication is accurate to within $\pm$ 0.1 inch of actual control-rod position.

6. Position Limit Switches

Seven, adjustable, cam-operated limit switches, as shown in Fig. 307-3 and Fig. 307-6, are actuated directly from the output shaft of each drive-motor assembly. Each of two switches (SZ-1 and ZS-2) have two normally-open contacts and two normally-closed contacts. Each of five switches (ZS-3 through ZS-7) have one normally-open contact and one normally-closed contact. Table 307-1 lists each of the contacts for the seven limit switches, along with their normal contact position, and the operations performed by their actuation.

7. Rod-Drop Timer

A rod-drop timer, Instrument No. 608 on Section H of the Main Control Panel (Fig. 803B-9) is used for rod-drop timing tests. The timer is started by the same relay which de-energizes the electromagnetic clutch. It is stopped by either an auxiliary limit switch set for 50 per cent insertion or by a full-in limit switch (limit switch contact $\frac{ZS-1}{3}$). Electrical wiring details for the timer are indicated on Fig. 307-6.

D. Control Rod Disconnect Procedure

1. General

In order to prevent unscheduled or accidental upward movement of the control rods while disconnecting the racks in preparation for rod-drive

Table 307-1 OPERATIONAL CHARACTERISTICS OF CONTROL ROD POSITION LIMIT SWITCHES

Switch Contact Designation	Normal Contact Position	Operation Performed
ZS-1/1	Closed	Opens at lower (full-in) limit of rod travel to de-energize drive-motor.
ZS-1/2	Open	Closes at lower (full-in) limit of rod travel to energize green light on rod position indicator.
ZS-1/3	Closed	Opens at lower (full-in) limit of rod travel to de-energize rod-drop timer.
ZS-1/4	Open	Spare.
ZS-2/1	Closed	Opens at upper (full-out) limit of rod travel to de-energize drive motor.
ZS-2/2	Open	Spare.
ZS-2/3	Closed	Spare.
ZS-2/4	Open	Spare.
ZS-3/1	Open	Closes when rod is at full-in position to satisfy reactor startup inter-lock conditions.
ZS-3/2	Closed	Opens at lower (full-in) limit of rod travel to de-energize drive-motor run-down circuit after a scram.
ZS-4/1	Closed	Opens at lower (full-in) limit of rod travel to de-energize red indicator light on rod position indicator.
ZS-4/2	Open	Spare.
ZS-5/1	---	Spare.
ZS-5/2	---	Spare.
ZS-6/1	---	Spare.

Table 307-1 (Continued)

Switch Contact Designation	Normal Contact Position	Operation Performed
ZS-6/2	---	Spare.
ZS-7/1	---	Spare.
ZS-7/2	---	Spare.

servicing and/or vessel head removal, the following design criteria have been adhered to: a) The movement of the rack, when connected to the control rod, is accomplished from the Main Control Panel by means of the drive motor, except when connecting or disconnecting the control rods; b) to permit the control rod to be connected to or disconnected from the rack, a maximum of 2 inches of manual movement of the rack is permitted; however, during this movement the drive-motor assembly is not disengaged from the rack; c) a mechanical interlock (latch) is incorporated in the flexible coupling between the water seal shaft and the drive shaft which prevents the water seal shaft (and the pinion shaft which is spline-connected to the water seal shaft) from turning after decoupling the drive shaft. This interlock permits removal of the drive-motor assembly without disconnecting the rack from the control rod; d) the disconnect fitting and/or disconnect procedure are designed to give positive assurance of the unlatched condition of the rack before raising the rack during the disconnect procedure. The control rod disconnect procedure is outlined in the following paragraphs and is illustrated schematically in Fig. 307-5.

2. Conditions Prior to Initiation of Disconnect Procedure

The following conditions must exist prior to initiation of the disconnect procedure for any control rod drive unit:

a) All 17 control rods must be in the full-in position.
b) The reactor pressure must be atmospheric.
c) The reactor water temperature must be 120°F or less.
d) The reactor water level must be at the unloading shield level.
e) The removable biological shield structures above the vessel head must be removed.
f) The presence of safe radiation levels must be verified.

g) All nuclear instrumentation must be operating; the micro-microammeter channels must be on lowest scale.
h) The process scram interlocks must be bypassed by operation of key-operated switches to permit rack withdrawal after the control rod has been disconnected.

3. Disconnect Procedure

The following is a listing of the operations to be performed in order to disconnect the control rods prior to vessel head removal. To re-connect the control rods, this procedure is reversed.

a) Remove thermal insulation from upper housing (refer to Fig. 308-3 and Fig. 307-2).
b) Vent accumulated gases in upper housing (if required). If found to be necessary after preliminary operation, the accumulated gases in the upper housings are to be vented to a collection system by means of vent fittings located at the top of these housings.
c) Remove upper housing by decoupling the Marman Conoseal pipe joint (refer to Fig. 307-2).
d) Mount jack on upper threaded end of rack (refer to Fig. 307-5).
e) Back off snubber lock nut until it contacts the lower end of the jack.
f) Back off the snubber nut to lower the rack and attached control rod until the load is transferred from the snubber plate to the control rod guide structure. During this operation the floating rack section remains stationary due to its engagement with the pinion. The control rod will be in its rest position on the rod guide structure when the snubber nut no longer contacts the snubber plate.
g) Back off the two nuts on the threaded upper end of the push rod 1-1/4 inches.
h) Screw down the jack bolt until the lower end of the push rod contacts the control rod end fitting approximately 1 inch. This operation causes the locking sleeve of the control rod gripper to move downward to clear the collet fingers and causes the collet fingers to spread, releasing the control rod end fitting.
i) Continue to screw down the jack bolt to cause the collet fingers and rack to move upwards with respect to the control rod end fitting approximately 1/4 inch. During this operation the rack will slide up until it contacts the floating rack section; when contact is made the operator knows that the control rod gripper is free from the control rod.
j) Turn down the lock nut until it contacts the snubber nut.
k) Drive rack to full-out position.
l) Engage mechanical latch on rack.
m) Decouple and remove drive shaft that connects rod-actuator assembly to drive-motor assembly. This operation causes the pinion to be locked in place by a second mechanical latch.

E. Process Specifications for 17-4PH Stainless Steel

1. General

Since proper functioning of the rack and pinion is of major importance for safe operation of the reactor, careful attention was paid to the selection of materials and the fabricating procedures for these components. The rack and pinion have been designed to operate for the life of the reactor in a wet-steam atmosphere at 540°F. Armco 17-4PH stainless steel was selected because of its corrosion resistance, wear resistance, and impact resistance under these conditions. However, certain precautions were taken during fabrication to eliminate all significant residual stresses in the finished parts since such built-in stresses may subject the part to failure from stress corrosion cracking. In general, those precautions followed were: 1) the parts have been designed so as to minimize stress concentration areas; 2) welding or weld repair of parts were prohibited; 3) all heat treatments and other processing were carefully controlled with tests and inspections of both as-received raw material and finished parts in accordance with the specifications described below.

2. Specifications for 17-4PH Raw Material

The raw material is to be furnished in the hot finished, solution heat treated, annealed condition (Condition A) and pickled. In addition, the material is to be ultrasonic tested to insure internal soundness. The requirements for solution heat treatment are as follows:

a) Prior to solution heat treatment all material shall have been cooled to 90°F or lower, thoroughly cleaned and degreased.
b) To solution heat treat the material, it shall be uniformly heated at 1925°F ± 25°F; held at temperature for 1/2 hour (+15 minutes, -0 minutes); oil quenched and air cooled to 90°F or lower.
c) After solution heat treatment, hot sawing, abrasive wheel cutting, or torch cutting shall not be permitted; cold sawing is acceptable.
d) All material shall have a minimum surface finish suitable for purposes of non-destructive ultrasonic testing.
e) All material shall be tested to determine response to aging heat treatment.

3. Specifications for 17-4PH Finished Components

The requirements for machining and processing are as follows:

a) As received material shall be in the solution heat treated condition and will be verified by supplemental hardness tests.

b) Prior to each aging heat treatment all material shall have been cooled to 90°F or lower and thoroughly cleaned and degreased.
c) Prior to the first aging heat treatment, all straightening and rough machining of components shall be performed.
d) For precipitation aging, the bars shall be uniformly heated to 1100°F (+0°F, -25°F); held at temperature for 2 hours first aging heat treatment) or for 4 hours (final aging heat treatment); and cooled in still air to 90°F or lower.
e) Only finish machining and nondestructive tests and inspections shall be permitted between the first aging heat treatment and the final aging heat treatment.
f) In addition to nondestructive ultrasonic and dye-penetrant tests, specimens taken from each lot of material shall be tested to determine tensile, impact, and hardness properties.
g) Welding or weld repair of components shall not be permitted.
h) Acid pickling, acid cleaning, grinding, honing, dye penetrant examination, or any other processing shall not be performed after the final aging heat treatment.
i) Marking methods that will affect surface condition shall not be permitted after final aging heat treatment.

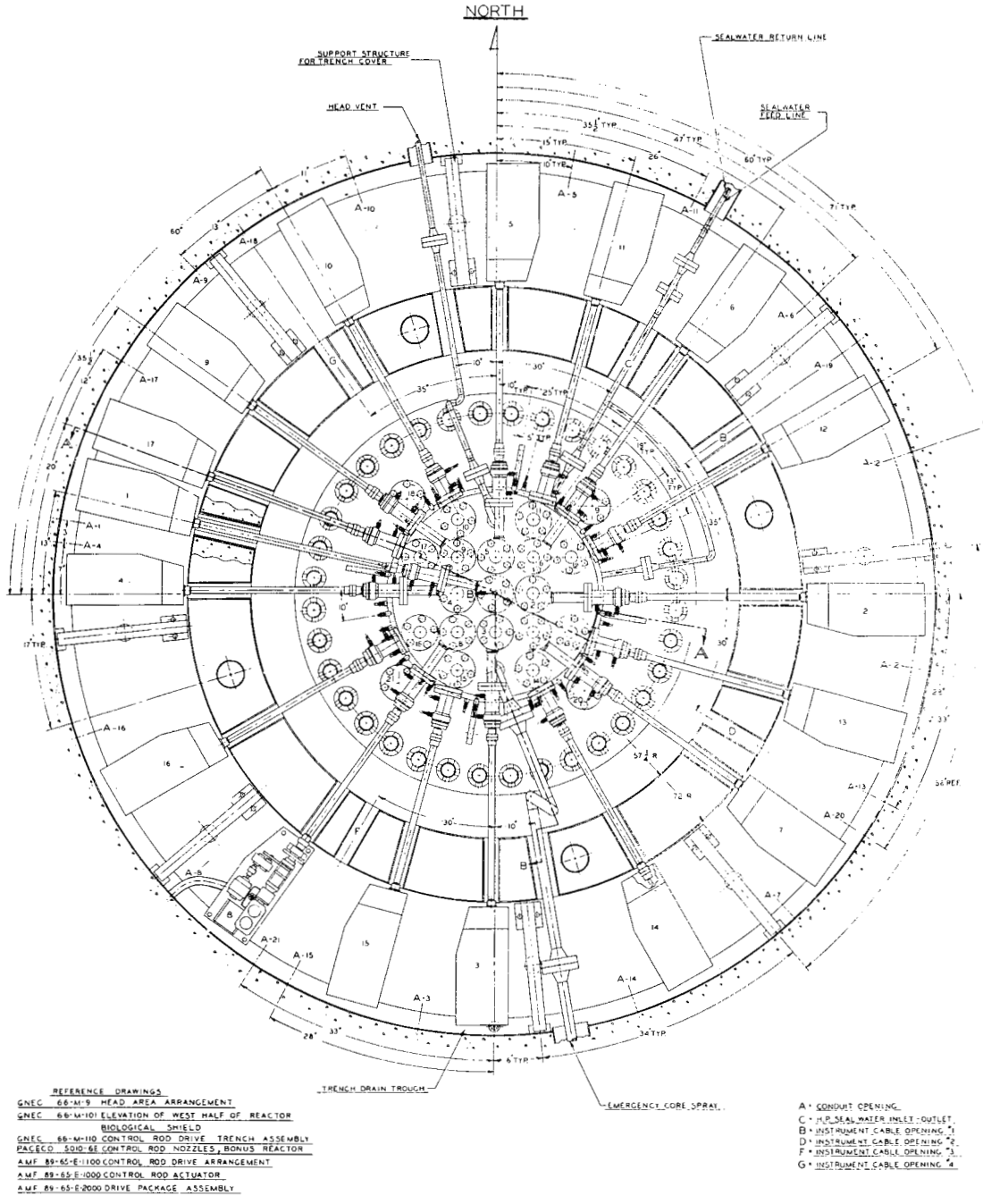

Ref. Dwg. GNEC 66-M-9

Fig. 307-1 Layout of control rod drive system.

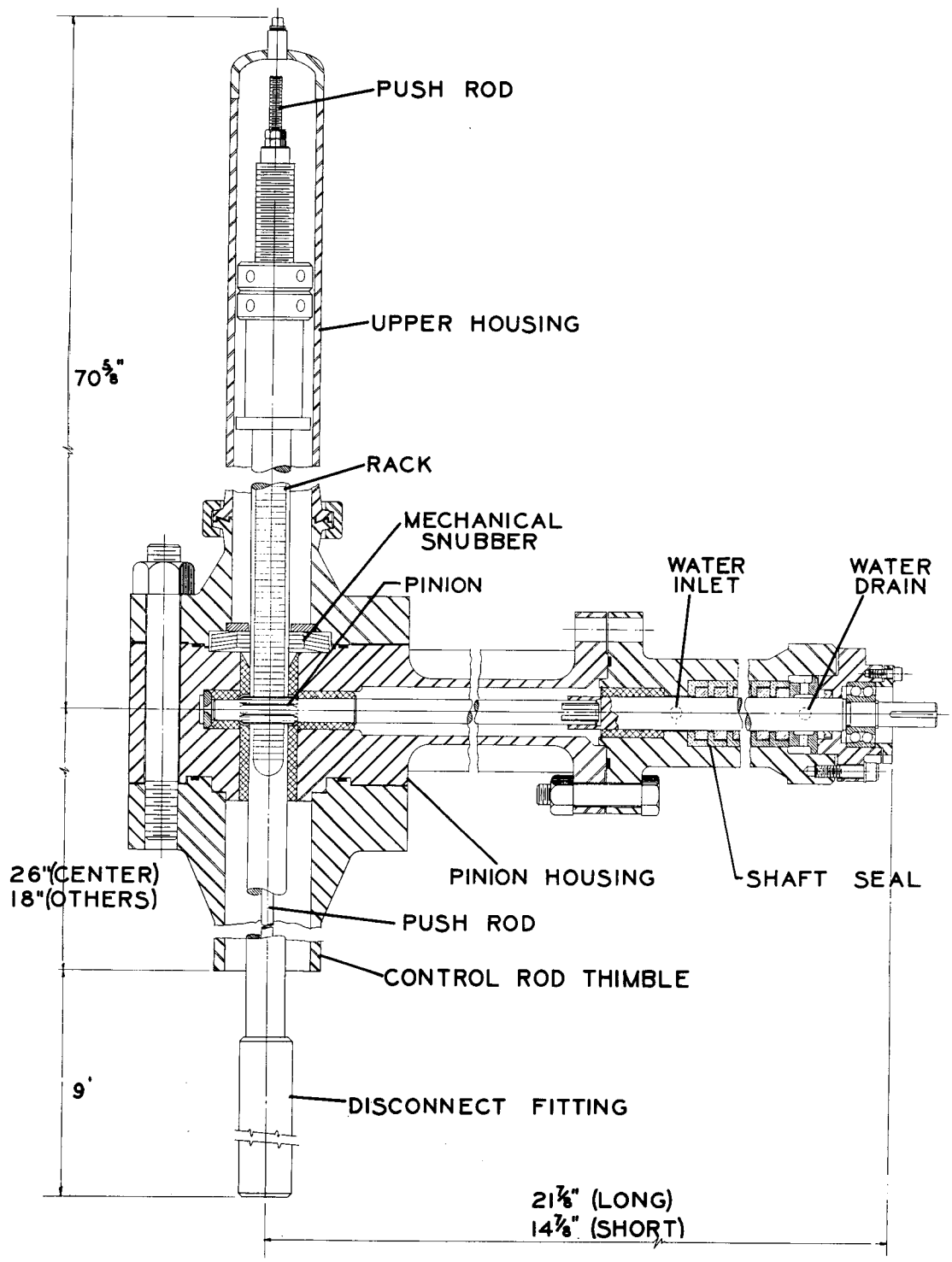

Ref. Dwg. American Machine and Foundry Co. 89-65-E-1000 Rev. A

Fig. 307-2 Rod-actuator assembly.

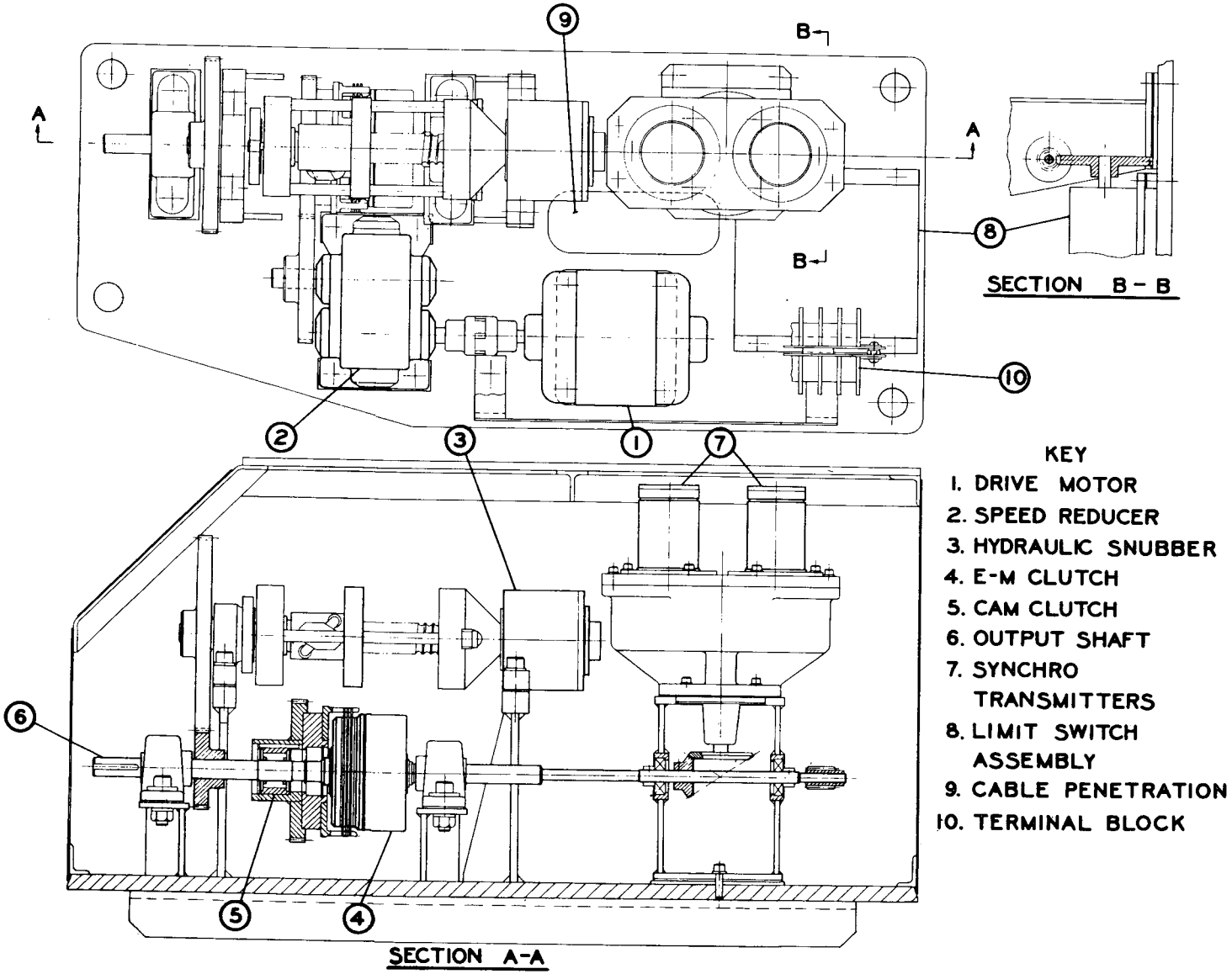

Ref. Dwg. American Machine & Foundry 89-65-E-2000

Fig. 307-3 Drive-motor assembly.

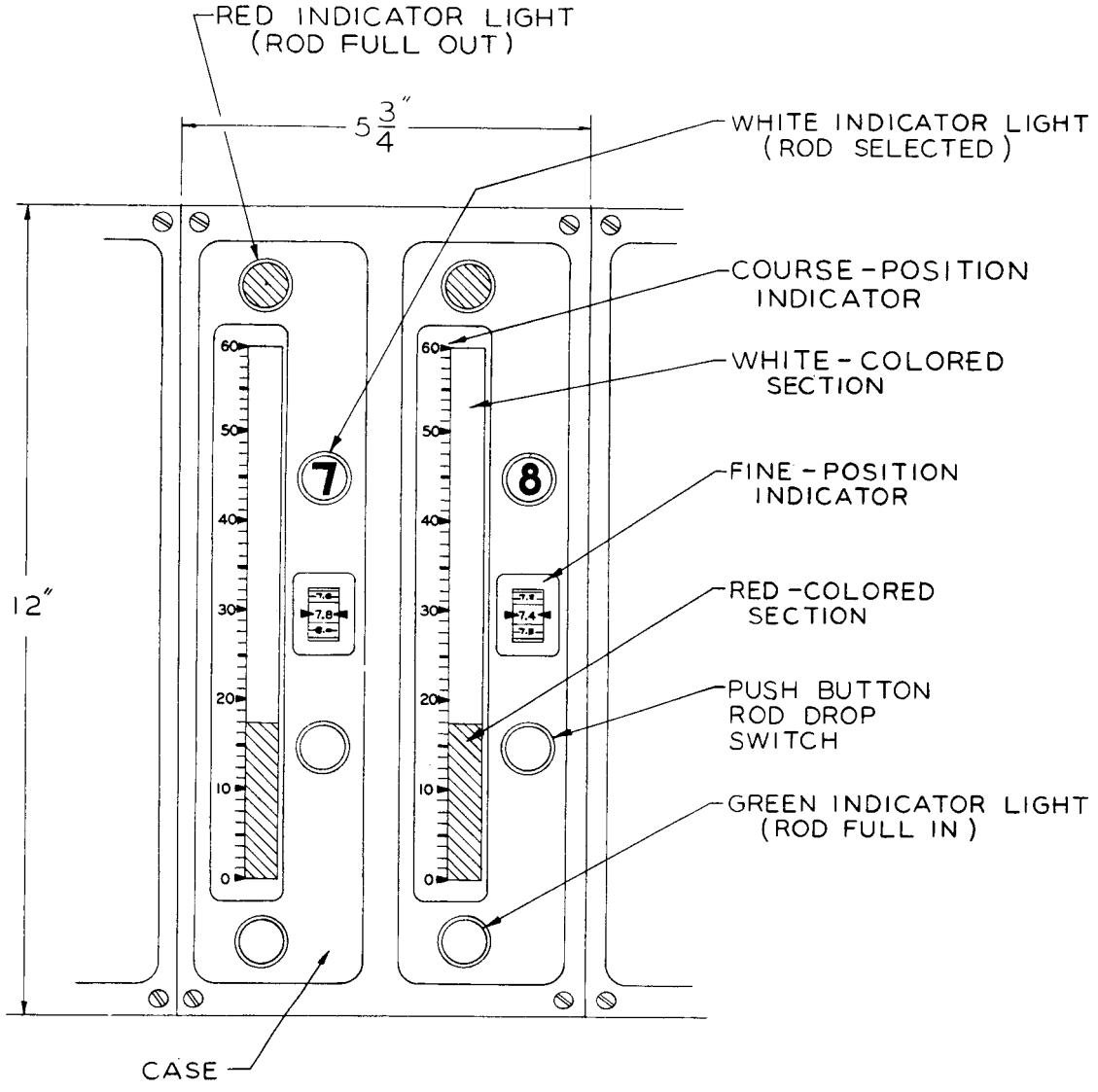

Ref. Dwg. Feedback Controls, Inc. 4070 Rev. B

Fig. 307-4 View of control rod position indicator module mounted in the main control panel.

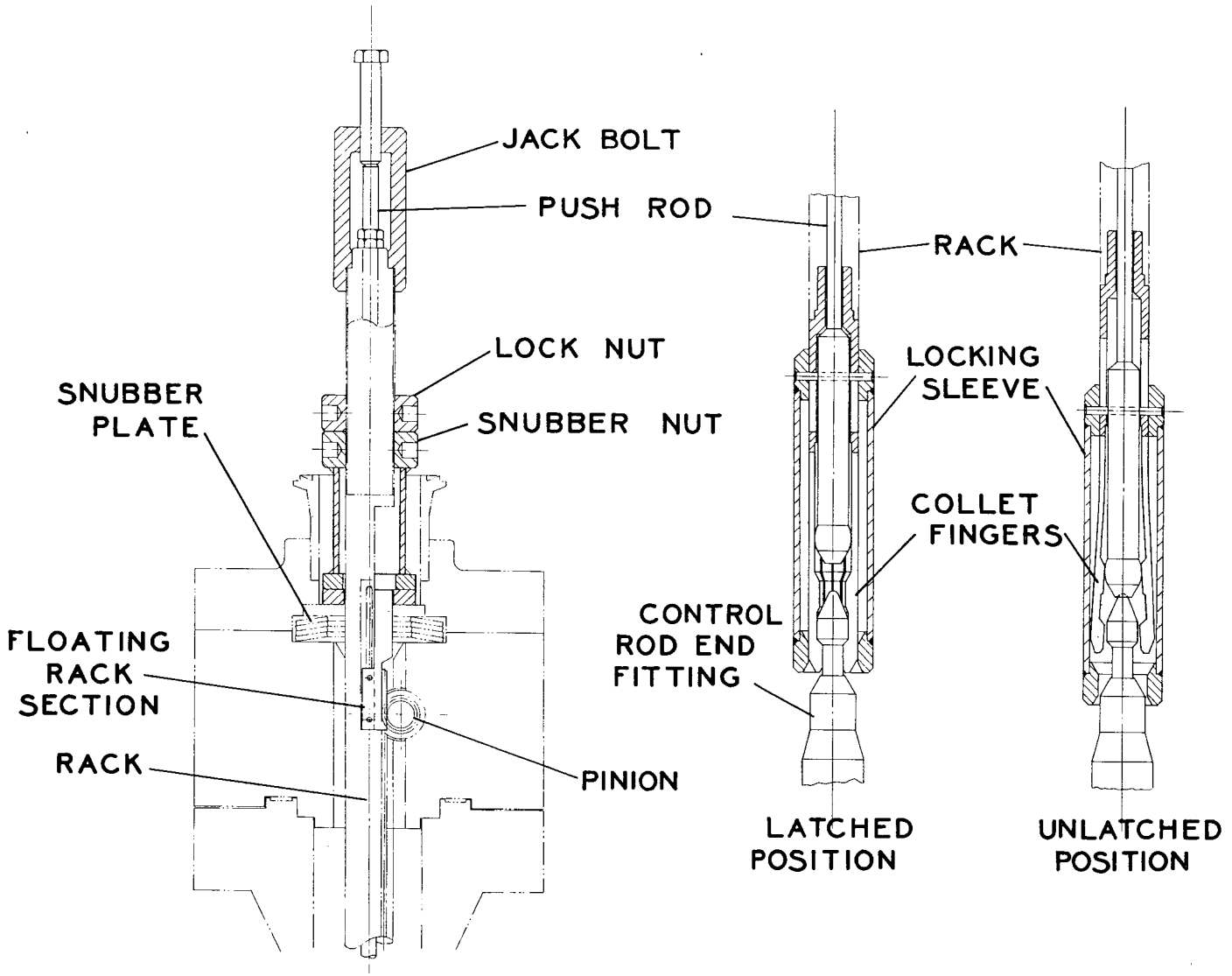

Ref. Dwg. American Machine and Foundry Co. 89-65-E-1200

Fig. 307-5 Control rod disconnect procedure.

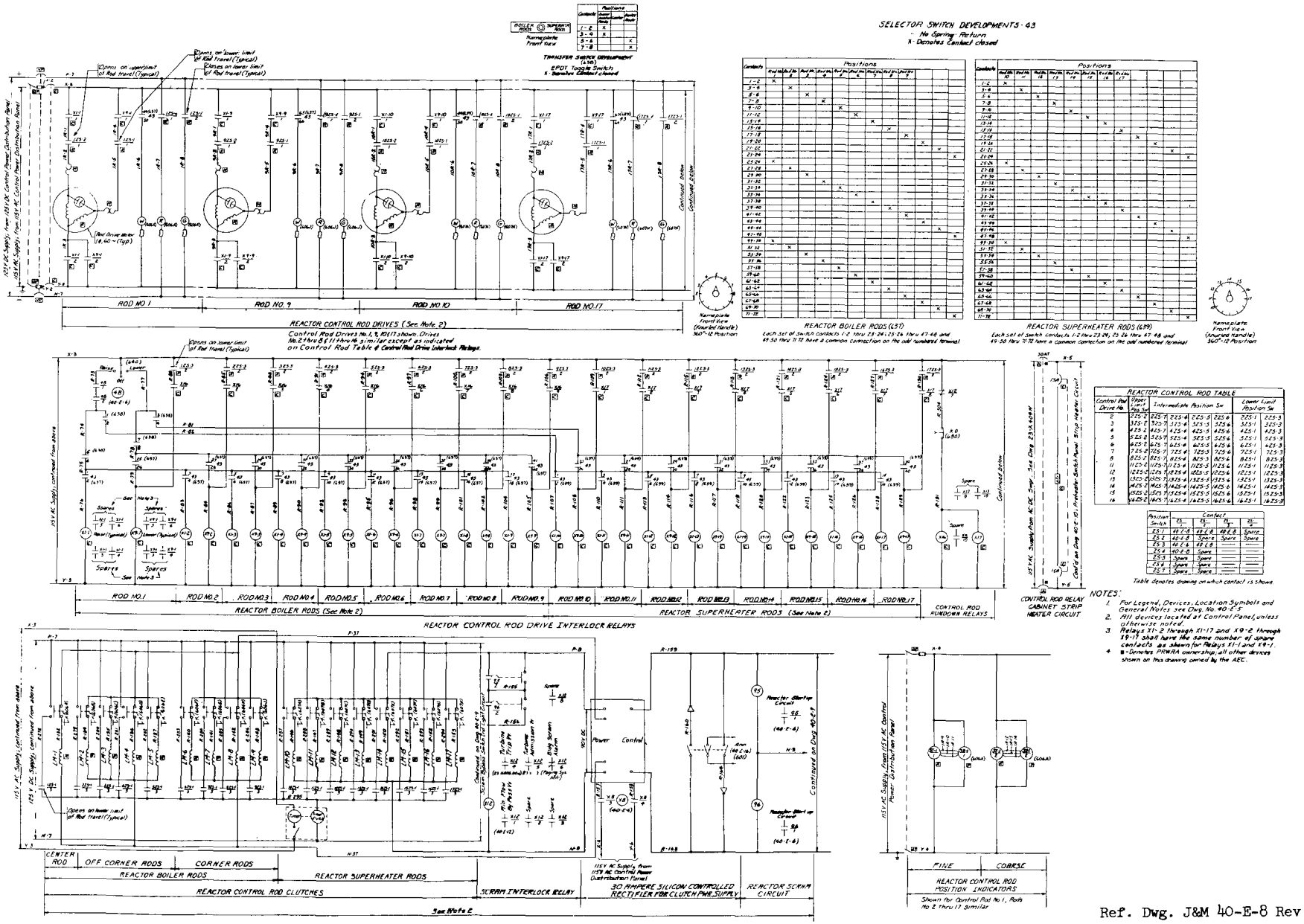

Ref. Dwg. J&M 40-E-8 Rev. 2

Fig. 307-6 Elementary wiring diagram for the control rod drive system.

308. REACTOR BIOLOGICAL SHIELD

The reactor biological shield structure which surrounds the reactor pressure vessel, consists of a combination of steel, water, lead, and concrete. Figure 308-1 shows the material, thickness and the location of the various fixed and removable shield structures comprising the biological shield.

The core region portion of the biological shield structure consists of an annular steel-and-water neutron-shield tank surrounded by 8 ft-9-1/4-in.-thick ordinary concrete all contained within a 28-ft-dia., 1/4-in.-thick cylindrical steel liner. Figure 308-2 shows the neutron shield tank in place inside the biological shield liner prior to pouring concrete around it.

In addition to the shielding function, the neutron shield tank also supports the reactor pressure vessel and its contents; the neutron shield tank is designed, constructed and inspected in accordance with the requirements of the 1959 edition of the ASME Code for Unfired Pressure Vessels (Section VIII) and Nuclear Code Case 1270 N. The 10-ft, 5-in.-OD by 18 ft-2-1/2-in. high annular tank is designed for an internal pressure of 50 psig; the shell walls are designed also to restrain the vessel from lifting like a rocket by the propulsive force of the escaping steam which could result on brittle failure of the pressure vessel shell. The inner and outer pressure shells are 1-in. and 1-1/2-in.-thick, respectively, and fabricated from SA 212 Gr. B carbon steel plate. There are no girth welds in the shell courses 4 ft above and below the core centerline and the longitudinal welds are located between the main axes of the core. Two concentric 1-1/2-in.-thick shells, 6 ft and 8 ft high, fabricated from SA-7 Grade plate, are mounted inside the 8-1/2-in.-wide water annulus of the tank for gamma shielding purposes. Two sets of two parallel 6-in. Sch. 160 pipes tangentially penetrate the outer shell wall and the inner shells near the core centerline as shown in Figs. 308-1 and 308-2; these water-tight sleeves accommodate the four stainless steel instrument thimbles (refer to Fig. 802-1) which house the reactor start-up and power range nuclear instruments. A slab of carbon steel 4 ft wide by 8 ft high and 3 in. thick is embedded in the concrete outside of the tank and adjacent to each set of thimble ports; this additional external shielding replaces the steel removed by the cutouts in the inner shields for the instrument thimble sleeves.

The maximum dose rate at the outer surface of the shield liner wall is calculated to not exceed 1 mrem/hr.

The 35 Kw of heat generated in the steel and water of the neutron shield tank, including the thermal heat loss from the pressure vessel, is removed by forced circulation of 100°F water by the shield cooling system (Section 406) at a rate of 30 gpm through the tank. The water enters the tank bottom through two 2 in. Sch. 80 carbon steel pipes and leaves at the top through two lines of the same size. Any radiolytic

gases generated in the water are vented to the shield cooling system surge tank mounted on platform level 74 ft-0 in.

Instead of applying the thermal insulation directly on the surface of the pressure vessel the thermal insulation below the vessel support skirt is contained in a 3-1/2 in. annulus between the neutron shield tank inner pressure shell and a 1/4-in.-thick cylindrical, water-tight carbon steel liner. The insulation consists of two (2) 1-1/2-in.-thick layers of fiberglass blanket containing 10 per cent boron oxide by weight.

At the lower end of the tank an 8-in. Sch. 80 water-tight pipe sleeve penetrates the tank inner and outer pressure shells and its open end terminates inside the insulation retaining steel shell. An 8-in., 30 psi aluminum rupture disc is mounted on the other end of this line in the reactor circulating pump compartment. The rupture disc is installed to relieve the pressure in the annulus surrounding the pressure vessel in case a leak develops in the pressure vessel. Normally this space below the vessel support skirt is maintained at a negative pressure of 1 in. H_2O by the reactor annulus exhauster as shown schematically in Fig. 410-1; a 2-in. pipe manifold to the vent lines in the bottom shield plug is connected to the reactor annulus exhauster suction header.

Since there always exists the possibility that a leak can develop in the pressure vessel superheated-steam nozzle connections, the shielding in this region has been made so that it can be removed if required. Cast, ordinary concrete blocks are installed with a neat mortar mixture in the straight-through 8-ft-high pipe tunnels. The base of the tunnel is approximately at the same level as the top surface of the neutron shield tank to which the reactor pressure vessel support skirt is welded. Cooling coils are anchored to the stepped steel liner placed outside the insulation on the upper portion of the reactor vessel and to the steel liner plates that form the slots in which the insulated pipe lines lead to the outside of the shield structure. Radiation streaming through the pipe slots in the north and south tunnels is reduced by lead brick at the slot end where the pipes leave the shield.

The section of the pipe chase wall directly in-line with the superheater pipe tunnel is made of 16-in.-thick, steel aggregate, concrete block (minimum density 280 lb/ft^3). The remainder of the pipe chase wall down to the main floor level is described in Section 906C. The upper portion of the pipe chase shield wall has been left open to permit limited access to the pipe chase. The maximum operating dose rate expected at the opening is 60 mrem/hr; the relatively high dose rate at the opening will not affect any readily accessible area in the plant. The maximum operating dose rate outside of the pipe chase shield wall will occur directly opposite the main 10-in. steam header and will not exceed 3.25 mrem/hr 3 ft from the shield wall.

In this same upper region of the vessel the radiation streaming from the vessel proper through the vessel insulation to the reactor operating floor is attenuated by a 12-in.-deep steel-shot-filled annular ring

anchored to the reactor vessel below the vessel shell flange. A steel-backed, annular ring of steel aggregate concrete extending from the top of the concrete block tunnel to the reactor operating floor level, forms the radiation shield between the vessel and the control rod drive motor trench in the reactor operating floor. A removable 1-in.-thick steel cover plate above the rod drive trench attenuates the scattered radiation in the trench and reduces the radiation above the trench to acceptable levels. The top 21 in. of this 12-ft-OD x 9-ft-6-in.-ID annular ring is made removable as a single piece to permit disassembly of the control rod motor drive shafts below. This shield is identified as No. 3 in Figs. 308-1 and 308-3.

The radiation level above the top of the reactor vessel is maintained at tolerance levels by a two-piece removable shield structure which encloses the control rod extension thimbles as shown in Fig. 308-3. The lower 35-ton shield section (Shield No. 2) is a 12-ft-OD by 6-ft-8-in.-ID, 6-ft-6-in.-high steel backed concrete cylinder which has the lower annular ring end stepped and filled with 6 in. of high density concrete and the remainder of the height filled with ordinary concrete. The stepped portion of the shield fits into the mating opening in removable shield No. 3 and prevents streaming through the contact surface. The top end of the shield No. 2 is closed off with an 11-ft dia., 21-in. thick, 12-ton light concrete shield plug (Shield No. 1). The annular lip at the bottom of Shield No. 1 maintains the relative position of the two components and similarly stops radiation through the seating surfaces. Offset radial ventilating ports are cast in shield No. 1 and plant air is induced through them to remove the thermal heat losses in the control rod thimble extension region and to keep the concrete from overheating. The ventilation of this area is described in Section 409. Additional shielding in the vertical direction is obtained by storing the 12-in. thick rotating shield assembly on top of Shield No. 1 as shown in Fig. 308-3.

Directly below the reactor pressure vessel, the concrete-embedded bottom shield plug and ceiling shield reduce the radiation from the core into the pump room to essentially those radiation levels due to the N-16 in the reactor circulating-water piping. The bottom shield plug is an 8 ft-9 in.-dia. steel cylinder containing stepped sleeves for the forced-circulation, feedwater, and level column pipe penetrations and is filled to a depth of 4 ft with steel aggregate concrete which is topped with a 2-in.-thick lead layer. Cooling water from the shield cooling system is pumped through the copper coils around each sleeve and through the cooling coils in the lead to remove the heat generated in the shielding and the heat transferred through the insulated lines penetrating the shield. Close-fitting carbon steel shield collars 18-in. long are welded to each pipe in the lower enlarged-diameter sleeve section, and attenuate the radiation streaming through the one (1)-in. asbestos rope insulation layer. A supplementary shield of steel aggregate concrete, 20.0 ft dia. and 12 in. thick, is installed in the pump room below the right angle bends of the forced-circulation pipes, and shields the equipment below from the direct core radiation streaming through the single 16-in.-inlet

and the two-12-in.-outlet pressure-vessel reactor circulating-water pipes. The shielding provided by the ceiling shield slab is adequate to reduce the after-shutdown radiation from the core to a sufficiently low level to permit access to the pump room.

The maximum dose rate during operation directly above the top shield structures will not exceed 10 mrem/hr. Three (3) ft from the sides of the removable top shields and three (3) ft above the reactor floor level, the maximum dose rate will not exceed 1 mrem/hr.

A summary of the shield materials and thicknesses at the various locations is given in Table 308-1.

Table 308-1. REACTOR BIOLOGICAL SHIELD MATERIALS AND THICKNESSES

Material	Location and Description	Density, g/cm^3	Thickness, cm
	Radial Shield		
Water	Between core and pressure vessel	0.747	33.67
Steel	Core barrel	7.85	0.95
Steel	Thermal shield	7.85	2.54
Steel	Pressure vessel	7.85	8.57
	Air gap	--	6.03
Steel	Insulation liner	7.85	0.635
Fiberglass	Insulation	0.072	9.52
Steel	Shield tank	7.85	13.97
Water	Shield tank	0.988	13.97
Ordinary concrete	Concrete shield wall	2.40	267.34
Steel	Outside shield wall surface	7.85	0.635
	Axial Shield Above Core		
Water	Water plus steam above boiler region	--	128.30*
Steel	Pressure vessel head	7.85	13.34
Steel	Base for concrete shield	7.85	1.27
Ordinary concrete	Concrete shield	2.40	52.07
Steel	Fuel discharge rotating shield plug	7.85	30.48
	Axial Shield Below Core (Along a path through the vertical section of the water recirculation inlet pipe)		
Water	Between bottom of active core and inside bottom of pressure vessel	0.747	114.30
Water	Through vertical section of recirculation inlet pipe	0.747	251.5

* Effective thickness for a water density of 1 g/cm^3.

Table 308-1. (Continued)

Material	Location and Description	Density, g/cm^3	Thickness, cm
Steel	Core plate	7.85	12.70
Steel aggregate concrete	Pump room false ceiling shield	4.48	30.48
	(Along a path through the bottom shield plug)		
Water	Between bottom of active core and inside bottom of pressure vessel	0.747	114.30
Steel	Core plate	7.85	12.70
Steel	Pressure vessel	7.85	8.57
Lead	Facing on top of shield plug	11.1	5.08
Steel aggregate concrete	Bottom shield plug	4.48	120.65
Steel	Base for steel aggregate concrete shield plug	7.85	2.54
Steel aggregate concrete	Pump room false ceiling shield	4.48	30.48

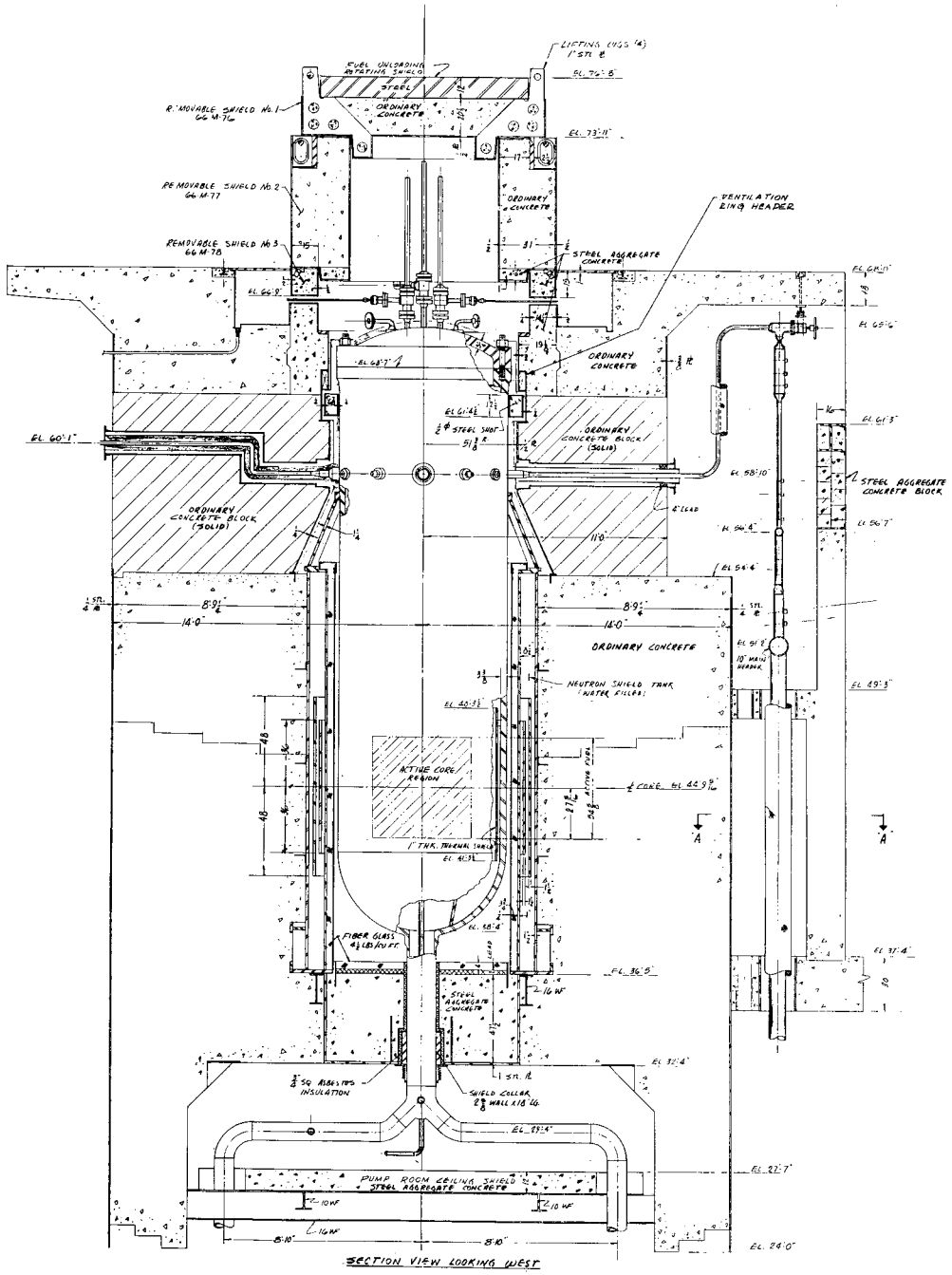

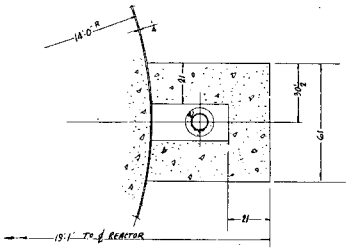

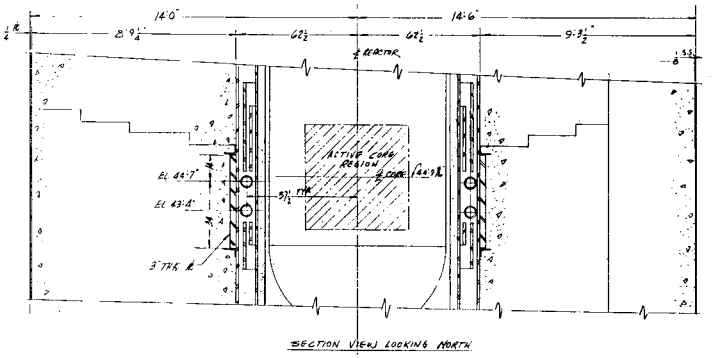

Fig. 308-1 Material, thickness, and location of the fixed and removable shield structures.

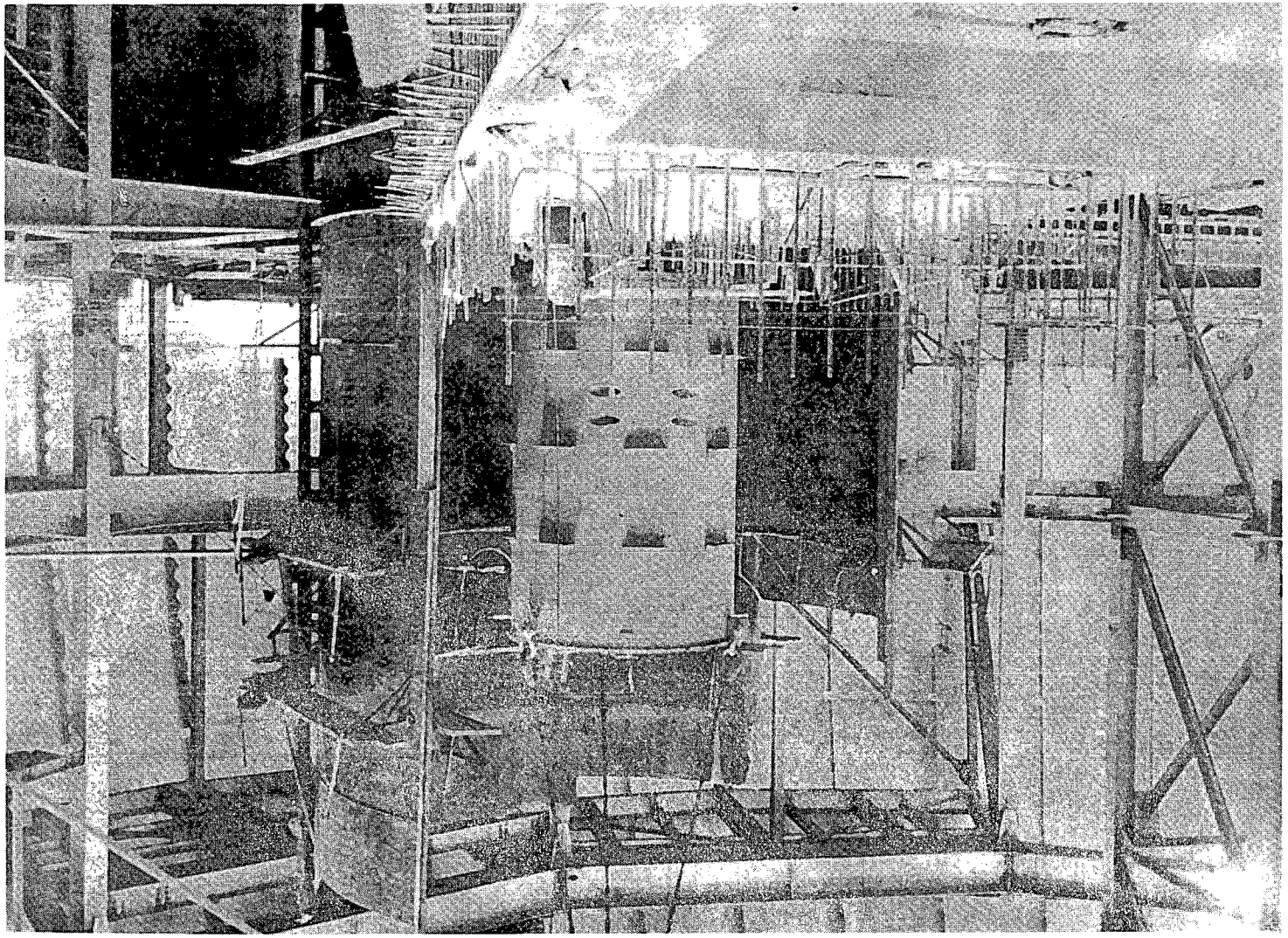

Fig. 308-2 Field installation of neutron shield tank in reactor biological shield liner.

KEY

1. Rotating Shield Plug Assembly
2. Removable Shield No. 1
3. Removable Shield No. 2
4. Removable Shield No. 3
5. Control Rod Drive Motor
6. Ventilation Air Inlet Duct
7. Ventilation Air Outlet Ring Header
8. Steel-Shot Trough

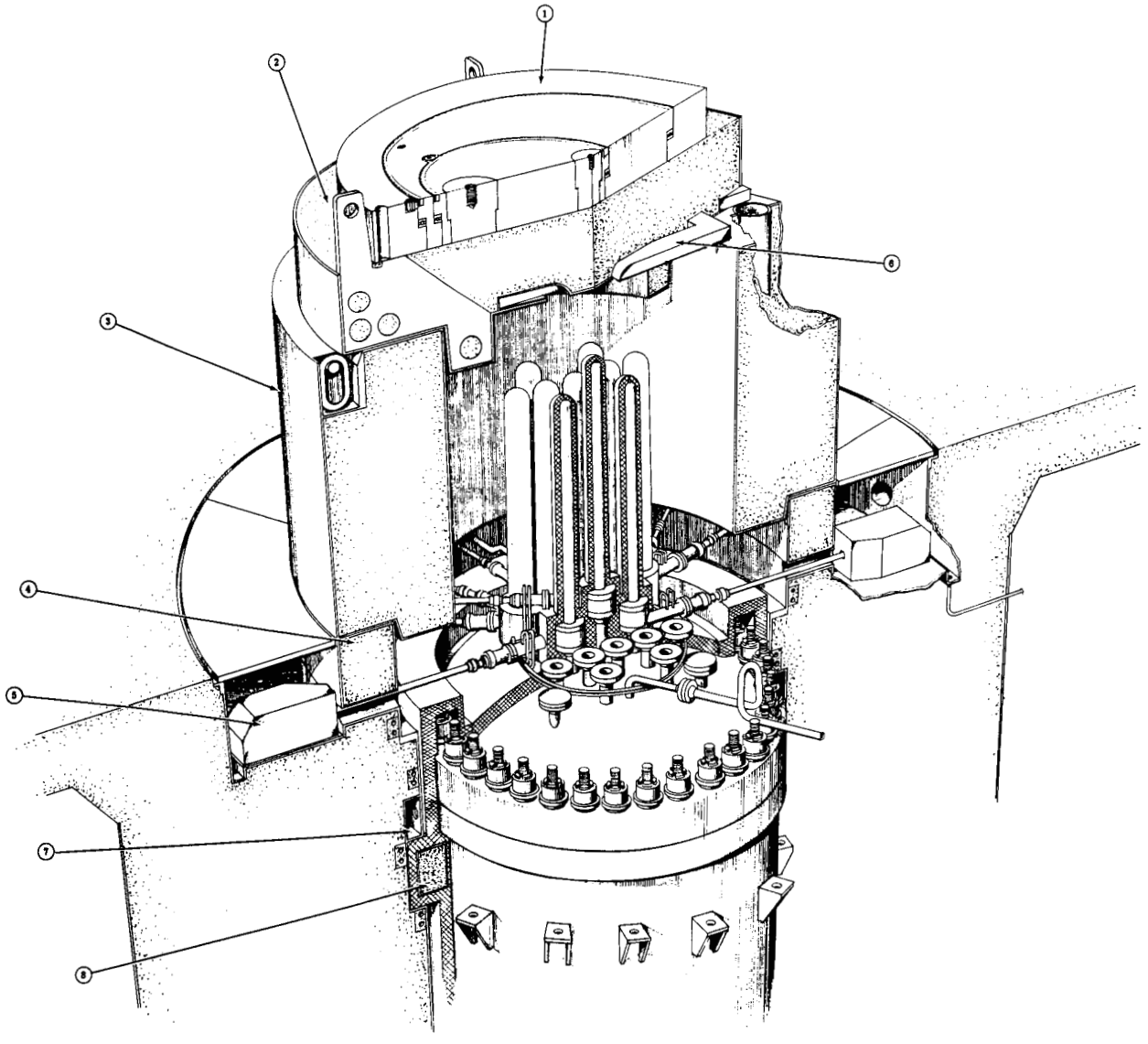

Fig. 308-3 Removable shield structures in place above reactor.

309. REACTOR PHYSICS

The design of an integral boiling-superheat reactor of the BONUS type places rather rigid requirements on the reactor physics performance. In addition to the usual requirements of sufficient excess reactivity to achieve the desired fuel lifetime, sufficient control capacity to compensate the excess reactivity, and a spatial power distribution sufficiently flat to make possible the design power output without local overheating, further specifications are imposed which require that the reactivity change due to flooding or voiding of the superheater coolant passages be small, that the steam void and temperature coefficients be negative, but not too highly negative, and that the proper division of power, between boiler and superheater, be maintained to give the desired steam outlet temperature. These requirements must of course be met over the useful life of the reactor, while reactivity changes of considerable magnitude are occurring because of fuel burnup. Needless to say, the reactor physics considerations involved in meeting any one of these requirements affect also the success in meeting some of the other requirements. Consequently, it is difficult to progress through a discussion of the reactor physics in a straightforward way, and to give a coherent picture of the over-all behavior, without digressing frequently to describe some of the interrelationships. In the following exposition, an attempt has been made to minimize the necessity for such digressions by covering, first, the specific reactor physics characteristics, in appropriately titled sections, without attempting to relate them closely to one another. Finally, in the last section, the various characteristics are brought together in their normal relationships by describing the neutron physics behavior of the reactor during the significant phases of its lifetime. This treatment leads to some repetition, which is perhaps inevitable.

Briefly, the first five of the following sections describe: A. the reactivity control program — that is, the management of control rods, replaceable shims, and fuel; B. the reactivity worths of control, shim and fuel elements; C. temperature, void, and other quickly acting reactivity effects; D. the method of controlling the boiler-superheater power split; E. the spatial distribution of power density in the boiler and in the superheater. The final section, treated under the heading Operating Characteristics and Fuel Burnup, relates the results of the preceding sections to the reactor behavior.

This treatment is intended to describe the behavior of the reactor rather than to document the methods of predicting its behavior. It may be said, however, in brief, that the characteristics have been determined by calculational methods based upon, and normalized to, the results of measurements on critical assemblies. These assemblies have constituted nuclear mockups of the reactor under various operating conditions — mockups that have been as faithful to the original as may practically be achieved at room temperature. The results of the critical

measurements, and an account of the method of applying them to the BONUS reactor, are contained in GNEC 198.[1] The basic calculational scheme used in conjunction with the critical results is described in GNEC 133[2] and GNEC 153.[3]

A. Reactivity Control Program

Figures 309-1 and 309-2 are diagrams showing the locations of fuel and control elements in the core, and the systems of numbering and nomenclature used in discussing the physics of the reactor.

There are nine cruciform control rods in the boiler region, which are designated as the central rod, the side rods (4), and the corner rods (4), as indicated in Fig. 309-1. There are eight slab-type absorbing control rods between the boiler region and the superheater region as is shown in the figure. These rods will hereafter be referred to as the blade rods. In operation, the sequence of withdrawal of the cruciform rods will be: the corner rods first, the side rods next, and the central rod last. The blade rods serve as the means of adjusting the division of power generation between the boiler and the superheater, and they will be withdrawn, during operation, to provide the desired power split. They will of course affect the reactivity also, and whenever they are moved, a cruciform rod must be moved also, in the opposite sense, to maintain criticality. The control rods will be moved individually, one at a time, but in such a way that the rod pattern will always be symmetrical about the axis of the core. That is to say, the rods other than the central rod are grouped into three banks — the side rod bank, the corner rod bank, and the blade rod bank — and the tips of the rods in each group are held at roughly the same level, although movement of the group is effected by small incremental motions of the individual rods.

The BONUS reactor is designed for an average fuel exposure of 10,000 Mwd/ton. In the equilibrium fuel cycle a four-batch reloading scheme will be used in the boiler, refueling being done at exposure intervals of approximately 2500 Mwd/ton, and 16 new boiler fuel assemblies being added, symmetrically, in the peripheral boiler positions at each

1. BONUS Zero Power Critical Experiments and Application to the Reactor Design, GNEC 198, General Nuclear Engineering Corporation, February 10, 1962.

2. Method for Analyzing Low-Enrichment Light-Water Cores, Supplementary Study Related to BONUS and Nuclear Superheat Programs, GNEC 133, General Nuclear Engineering Corporation, October 5, 1960.

3. Analysis of the Initial Nuclear Superheat Critical Experiments, Supplementary Study Related to BONUS and Nuclear Superheat Programs, GNEC 153, General Nuclear Engineering Corporation, January 30, 1961.

shutdown. The fuel assemblies to be removed will be taken from the centermost positions, and assemblies will be shuffled from the outer positions to the more central positions to leave room for the new assemblies at the periphery. Superheater fuel assemblies will also be replaced on an "outside-in," four-batch schedule, and each replacement will be made at the same time as a boiler fuel reloading, but only half as frequently, since the specific power in the superheater is only about half that in the boiler. As the superheater assemblies are shifted, they will also be rotated 180 degrees about their vertical axes in order to obtain a more uniform exposure over the assembly.

The fuel enrichments in the initial reactor are selected to make possible average exposures of 10,000 Mwd/ton in the first batches of enriched fuel removed (and in all subsequent batches). The initial enrichments are given in Table 309-I. The initial average enrichments of both boiler and superheater, are, of course, considerably higher than the enrichments will be after an equilibrium reloading cycle has been established wherein the core contains a mixture of fresh and exposed fuel. This means that the excess reactivity of the core will be considerably higher during the very early stages of reactor operation than it will ever be again during the remaining life of the reactor. In order to avoid the very large distortions of power distribution that would occur if this excess reactivity were compensated only by control rods, absorbing shims are used in the boiler and in the gap between the boiler and superheater during the initial operation of the reactor, until the equilibrium reloading cycle has been approximated. These shims are removable, and it is planned that they will be replaced by shims of lesser absorption during the early life of the reactor, and they will eventually be removed altogether. The shims are made of boron steel attached to stainless steel holders, and most of the absorption by the shim occurs in the boron. There will be an appreciable burnup of the boron; this burnup will be utilized to prolong the usefulness of a given set of shims and thus to reduce the number of changes that must be made in the shims during the early operating period. Since the shims are replaceable, however, the rate of burnup of the boron is not a crucial consideration.

In order to provide axial power flattening in the reactor, the boron content is varied along the length of each shim, by using part-length boron-steel shim strips on the shim holders. Figure 309-3 is a diagram showing the locations of the part-length strips on the boiler and boiler-superheater shim holders. Table 309-I lists, in addition to the fuel enrichments, the initial shim loadings of the various core regions. Extra shims are provided to make possible adjustment of the shimming, if necessary, to meet the initial, cold, reactivity specification. It may be seen from the table that, axially, the shim absorption is highest in the bottom portion of the core, to counter-act the effects of the axial steam void distribution and of partial control-rod insertions, both of which tend to cause the power density to peak near the bottom of the core. Radially, in the lower portion of the core, the shim absorption is concentrated in the enriched fuel assemblies nearest the center, to flatten the radial power distribution.

Table 309-I INITIAL FUEL AND SHIM LOADINGS OF BONUS CORE

(See Fig. 309-2 and Fig. 309-3)

Type of Fuel Assembly Location	Number of Locations	Type of Fuel Assembly	Fuel Enrichment wt.% U^{235}	Shim Type	Number of Locations with Given Shim Assembly; Number of Boron-Steel Strips on Shim Assembly; Thickness x Width (inches); and Natural Boron Loading (weight percent) of Each Strip					
					Region A	Region B	Region C	Region D	Region E	Region F
1	4	Boiler	Natural	None	--	--	--	--	--	--
2	12	Boiler	2.40	Boiler	None	12 locations; 1 strip; 0.050 x 0.375; 1.25 wt.%	8 locations; 1 strip; 0.200 x 0.750; 1.25 wt.% 4 locations; 1 strip; 0.200 x 0.375; 1.25 wt.%	None	--	--
3	20	Boiler	2.40	Boiler	None	20 locations; 1 strip; 0.050 x 0.375; 1.25 wt.%	20 locations; 1 strip; 0.200 x 0.375; 1.25 wt.%	None	--	--
4	28	Boiler	2.40	Boiler	None	28 locations; 1 strip; 0.050 x 0.375; 1.25 wt.%	28 locations; 1 strip; 0.050 x 0.375; 1.25 wt.% Also* 1 strip; 0.1562 x 0.375; zero wt.%; i.e., pure stainless steel	None	--	--
5	32	Super-heater	3.25	None	--	--	--	--	--	--
Boiler-Superheater Water-Gap Shims					--	--	--	--	None	52 locations; 1 strip; 0.100 x 1.52; 1.25 wt.%

* These two thicknesses are installed back-to-back.

With the core loading described in Table 309-I, the approximate control-rod configuration for full-power operation, after xenon and samarium have built up to equilibrium values, will be: center rod, one-third out; side rod bank, full out; corner rod bank, full out; blade rod bank, two-thirds out. This configuration gives a favorable power distribution, with some additional flattening in the radial direction by the center rod, and suffering a minimum of axial distortion by partially inserted rods. The reactivity compensated by the center rod amounts to about 1.5% k_{eff}, enough to provide operation for at least 2500 Mwd/ton in conjunction with the burnup of boron in the shims.

As operation proceeds, some of the boron in the boiler shims will burn out, but the sizes and boron loadings of the shim strips are so chosen that the preferential distribution of the boron is maintained, to preserve the power flattening, even though the average neutron absorption by boron decreases. The nominal average value of the fuel exposure attained during this initial period of operation, up to the first shim change, is 2500 Mwd/ton. This is actually the minimum value, specified with considerable conservatism to allow for uncertainties in the reactivity lifetime calculation, and a somewhat greater exposure is expected before shim changes are needed. In any case, when the reactivity has dropped too low to sustain operation, the reactor will be shut down and the boiler shims will be changed. At this time, the boiler-superheater shims can be changed, if reactor operation just prior to shutdown has indicated the need for more reactivity in the superheater, but a change is not expected to be necessary. The new boiler shims will be weaker, but will continue to concentrate the boron in the regions appropriate for power flattening; consequently, there will be little boron except in those regions which are indicated as highly loaded with boron in Table 309-I. The new shims in these regions will be less strongly self-shielded, and the boron will burn out at a significant rate. This burnup will, of course, tend to decrease the power flattening, but by the time the effect becomes significant it will have been counteracted by the flattening due to preferential burnup of fuel.

After 2500 Mwd/ton or more of further exposure, it will be necessary again to reduce the shimming. At this time, all the boiler shims will be removed, and the four central natural-uranium fuel assemblies may be replaced by enriched assemblies, the new assemblies being added at the boiler periphery and exposed assemblies being shuffled inward. Alternatively, the natural-uranium assemblies may be left in at this time, and may be replaced as part of the first regular fuel replacement. The natural uranium assemblies thus provide a means of adjusting the reactivity to take care of the inevitable uncertainties in reactivity lifetime.

After a further fuel exposure of 2500 Mwd/ton, it will be necessary to add new boiler fuel. At this point, the average exposure of the boiler fuel will be about 7500 Mwd/ton, but the average exposure of the 16 centermost assemblies will be approximately 10,000 Mwd/ton. These 16

central assemblies will be removed, and the remainder of the assemblies will be shuffled inward, as indicated in Fig. 309-4-A, leaving room for 16 new assemblies at the edge. From this time onward, new boiler fuel will be added as necessary to maintain reactivity, 16 assemblies at a time, according to the same pattern. At every second boiler reload, the superheater fuel assemblies will be rotated, and the absorption of the boiler-superheater shims will be adjusted, until the superheater fuel has reached an average exposure of 7500 Mwd/ton. At that point, all the boiler-superheater shims will have been removed, and the eight superheater assemblies adjacent to the core center lines will then be removed, all remaining assemblies will be shifted one position toward the center lines (Fig. 309-4-B), and eight new assemblies will be added at the vacant corner positions. Thereafter, eight new assemblies will be added, in the same way, at every second boiler reload. The reloading pattern is thus maintained constant throughout the life of the reactor, and the equilibrium distribution of assemblies illustrated in Fig. 309-4-C is attained. Whenever an unscheduled replacement of an assembly is necessary, the same pattern is preserved: the remaining assemblies are shuffled inward to fill the place of the removed assembly, and a new assembly is added at one of the regular peripheral positions.

B. Reactivity Worths of Control, Shim, and Fuel Elements

The control rods of the BONUS reactor are capable of shutting down the equilibrium core by a large margin (greater than 5% k_{eff}). However, because the enrichment of the fuel in the initial core is substantially higher than the average enrichment in the equilibrium core, in order to yield a high burnup in the first fuel assemblies removed, the control rods alone are not quite capable of shutting down the initial cold clean core; the deficiency is about 0.6% k_{eff}. The absorbing shims must therefore be present in the first full core loading. The effect of the shims is to reduce the cold, clean, k_{eff} of the unrodded core from 1.206 to 1.164, and to make the core subcritical by 3% k_{eff} when all of the control rods are fully inserted. This initial 3% shutdown margin is a specified quantity, and if it should happen that the initial shimming (Table 309-I) does not provide a 3% shutdown margin, the absorption of the shims is to be increased until the margin is attained. The shutdown margin of 3% will allow full withdrawal of two opposite side control rods without achieving criticality in the cold clean reactor; this is the test that is to be used for determining that the shimming has yielded an adequate shutdown margin. In addition to the control rods, the boric acid system constitutes an independent method of shutdown. It is capable of shutting down the cold clean, unshimmed, new reactor by a margin of 1.6% k_{eff} when all control rods are out, and of shutting down the cold, clean, shimmed new reactor by 5.2% k_{eff} when all rods are out.

In a reactor which contains a large number of control rods and, when cold and clean, has a high excess reactivity, the worths of individual control rods and control-rod banks are not unique quantities, but depend very strongly upon the patterns of control-rod withdrawal.

For this reason, many different patterns were investigated for the cold BONUS reactor, in a critical mockup[1] which was a faithful nuclear replica of the cold reactor in all essential respects except for differences in fuel enrichment. The significant results of the investigation, corrected, where necessary, for the effects of enrichment differences, are given in the following paragraphs.

The reactivity worths of the four banks of control rods, as determined, for the cold case, by critical bank position and rod drops, are given in Table 309-II. These worths apply for the case in which the reactor is made critical by the withdrawal of only the rod bank in question, all other control rods beings fully inserted.* The worths are therefore not, in principle, additive. The sum of the worths of the banks, which, in the cold case amounts to 17.5% k_{eff}, does, however, give an indication of the mutual shadowing of the rod banks when it is compared to the total reactivity worth of all the rods. The latter, in the cold reactor, is equal to the algebraic difference between the cold, unrodded, excess reactivity and the cold shutdown reactivity:

$$\text{(Total Rod Worth, Cold)} = \frac{1.164 - 1.000}{1.164} - (-0.030) = 0.141 + 0.030 = 0.171.$$

Since this quantity is only slightly smaller (by .004) than the sum of the cold bank worths, it shows that, on the whole, there is a negligible amount of mutual shadowing of the rod banks when all rod banks are fully inserted.

The mutual shadowing of individual control rods within a bank is not large. Calibration of a single corner rod and a single side rod, on opposite sides of the core, by "trading" one against the other, yielded a worth of 1.50% k_{eff} for the side rod and a worth of 1.04% k_{eff} for the corner rod as indicated in Table 309-II. Thus, singly, the side rod was worth about 9% more than its worth in the bank while the corner rod was worth about 19% less than its worth in the bank. The worth of a single blade rod, as determined by rod drop, is 0.55% k_{eff}.

The only strong shadowing occurs between adjacent side and corner rods. The combined worth of a side rod plus an adjacent corner rod, when all other control rods are fully inserted, is about 5% k_{eff}. If

1. BONUS Zero Power Critical Experiments and Application to the Reactor Design, GNEC 198, General Nuclear Engineering Corporation, January 31, 1962.

* Except for the case of the central rod, whose strength is not sufficient to yield criticality.

one of the two rods is withdrawn first, separately, its worth will, of course, have the usual value (1.50 for a side rod; 1.04% for a corner rod); if the second, adjacent, rod is subsequently withdrawn, it will add the remainder of the 5% reactivity. Thus, the total worth of the second rod withdrawn in such a sequence can be as high as 4% k_{eff}. This effect occurs, of course, because the volume of the core normally "held down" by the two adjacent rods, is, in the cold reactor, a relatively large fraction of a critical volume. If the general reactivity level of the core is decreased (e.g., by an increase of temperature) to the point that the corner-rod bank can be fully withdrawn without achieving criticality, then the reactivity is no longer high enough to support a local "critical volume" and the effect no longer occurs. The side-rod bank can then be withdrawn without encountering unusually high reactivity worths.

Table 309-II REACTIVITY WORTHS OF CONTROL RODS AND CONTROL ROD BANKS IN THE COLD AND HOT SHIMMED REACTOR

Control-Rod or Bank (see Fig. 309-1)	Reactivity Worth, % k_{eff}	
	cold	hot
Central rod	0.9	1.2
Side rod bank	5.7	7.6
Corner rod bank	5.2	6.9
Blade rod bank	5.7	7.6
Single side rod	1.5	2.0
Single corner rod	1.04	1.4
Single blade rod	0.55	0.74

The reactivity control characteristics of the cold reactor may be summarized as follows. The reactivity shutdown margin of the reactor will be 3% k_{eff}. This will correspond to a margin of at least two control rods, provided the control rods in question are not adjacent side-corner rods. Singly, or as members of the specified banks, the rods do not vary greatly in worth, the maximum worth being 1.5% k_{eff}. The maximum differential worth for one such rod (1.5% total worth) is 0.056% k_{eff}/inch. If a single side rod is withdrawn after the withdrawal of a single adjacent corner rod (or vice versa) the worth of the second rod withdrawn may be as high as 4% k_{eff}, and its maximum differential worth may be as high as 0.15% k_{eff}/inch.

The worths of the control rods in the hot reactor have been determined by calculation, by methods checked against the critical experiments, and are included in Table 309-II. In the hot condition, the maximum differential worth for one rod is 0.074% k_{eff}/inch.

As previously discussed, the shims are used during the approach to the equilibrium cycle for the purposes of: (1) compensating for a major part of the initial excess reactivity so that the control rods are nearly withdrawn from the reactor core during full-power operation; (2) general flattening of the power distribution; and (3) gross adjustment of the power split between boiler and superheater. As has been explained, to accomplish these objectives, the shims in the various portions of the reactor core have differing absorption characteristics (see Table 309-I). The over-all worth of the shims in the initial hot-operating reactor core is 9.2% k_{eff}. However, the shims contribute only 3.6% k_{eff} toward the shutdown of the cold-clean reactor. The greatly reduced shim worth for the cold-clean reactor arises from a combination of factors, namely, (1) the reduced effectiveness with reduced thermal diffusion length; (2) the varying absorption of the shims in the various portions of the reactor core coupled with the fact that criticality is attainable in a relatively small volume of the cold, clean core; and (3) the very nearly complete shadowing of the boiler-superheater shim by the inserted blade rods.

Criticality experiments were conducted to determine the reactivity contribution of a centrally located enriched boiler fuel assembly and of the poison shim within this assembly for the cold, clean condition of the reactor core. The single shimmed fuel assembly contributes about 1.25% reactivity to the system. The reactivity worth of the poison shim is about 0.22% k_{eff}.

C. Temperature and Short-Term Reactivity Effects

1. Reactivity Balance in New Reactor

As previously mentioned, the new core, when operating at full power with equilibrium xenon and samarium concentrations, will be critical with the following approximate control-rod configurations: center rod, one-third out; blade rods, approximately two-thirds out; corner rods, full out; and side rods, full out. The following section accounts for the reactivity differences between this condition and the initial cold, clean condition.

The reactivity worth of the equilibrium concentrations of xenon and samarium* is 3.5% k_{eff}. The extra reactivity available before the equilibrium values are reached will be compensated mainly by partial insertion of the side rod bank. It will be necessary, however, to insert the blade rods farther to maintain the proper power split. One approximate critical rod configuration for this condition is expected to be: center rod, one-third out; side rods, one-third out; corner rods, full out; and blade rods, one-half out.

When the reactor is operating at full power, approximately 3.3% k_{eff} is compensated by steam void, and 0.9% k_{eff} is lost by the Doppler broadening of the U^{238} absorption resonances.** To compensate this additional 4.2% reactivity, and render the reactor critical in the hot, unpoisoned condition at zero power, the side rods would be nearly fully inserted, with the center rod fully inserted and the blade rods about half inserted.

In the hot, unpoisoned, zero-power condition, with superheater voided, the k_{eff} of the reactor, with all control rods out, is calculated to be 1.092. If the superheater were flooded at this temperature, k_{eff} would increase by 0.0016. The k_{eff} of the cold, unpoisoned reactor, with superheater flooded, is calculated to be 1.164. The difference between these hot and cold numbers may be regarded as the temperature defect ($\Delta k_{eff} = 1.164 - 1.092 - 0.0016 = 0.070$; the reactivity decrease due to temperature rise equals: $\rho_{cold} - \rho_{hot} = \frac{0.164}{1.164} - \frac{0.092}{1.092} = 0.141 - 0.084 = 0.057$).

The reactivity relationships and the approximate control rod configurations discussed above are summarized in Table 309-III. The table shows also the k_{eff} values with all control rods inserted. These values, for all temperatures above room temperature, are based on the assumption that the control-rod worth remains constant as the temperature and the void-content change. They are therefore upper limits, since the control-rod worth actually increases as water temperature and voiding increase.

---

* For the purpose of this section, which is to identify those sources of reactivity change other than the burnup of fuel and burnable poison and the accumulation of long-term fission product poisons, samarium buildup is treated as a short-term reactivity variation. Actually, the buildup is slow enough to interact with the early boron burnup variation; this effect is described in Section 309-F.

** The 0.9% k_{eff} is the Doppler component due to power operation; an additional 0.4% is included in the reactor temperature defect.

Table 309-III REACTIVITY CONDITIONS IN INITIAL BONUS REACTOR

Reactor Condition	k_{eff}, all rods out	k_{eff}, all rods in	Approximate rod configuration for criticality: Center rod	Side rod bank	Corner rod bank	Blade rod bank
Full power operation, equilibrium Xe and Sm	1.015	<0.85	1/3 out	out	out	2/3 out
Δk_{eff} due to equilibrium Xe and Sm = -0.035						
Full power operation, no Xe or Sm	1.050	<0.88	1/4 out	1/3 out	out	1/2 out
Δk_{eff} due to Doppler effect = -0.009** Δk_{eff} due to steam in boiler = -0.033 Total = -0.042						
Zero power operation, hot (540°F), superheater voided, no Xe or Sm	1.092	<0.91	in	1/4 out	out	1/2 out*
Δk_{eff} due to Doppler (68° to 540°F) = -0.004** Δk_{eff} due to steam in superheater (at 540°F) = -0.0016 Δk_{eff} due to reactor temperature increase (68° to 540°F) = -0.066 Total = -0.072						
Zero power operation, cold (68°F), superheater flooded, no Xe or Sm	1.164	0.970	in	in	3/8 out	in

* This is not the rod configuration used during startup (see Section 309-F).
** Doppler effect split between coolant temperature and Δ T of fuel.

2. Reactivity Effect of Superheater Flooding

The reactivity effect of superheater flooding in the hot condition has been mentioned above. For safety reasons, it is desirable that the reactivity change due to flooding be small under all possible conditions of reactor criticality. The effect depends, both in magnitude and in sign, upon the fuel/moderator ratio in the superheater, and upon the reactivity coupling between the superheater and the boiler. The coefficient increases in the positive direction as the fuel/moderator ratio is increased. In order to minimize the absolute value over the entire range of possible operating conditions, the fuel/moderator ratio of the BONUS superheater has been chosen to give a flooding coefficient which is slightly negative at room temperature and slightly positive under design operating conditions. The reactivity effect of flooding has been investigated for these two extreme conditions. For intermediate conditions the effect will vary gradually between the two extremes, in direct relationship with the average water density in the superheater.

If the cold reactor is made critical by the normal control-rod program — by withdrawal of the corner-rod bank, with all other rods fully inserted — the reactivity change due to flooding of the superheater, as determined from the cold critical mockup, is a decrease of 0.30% k_{eff}. If the cold reactor is made critical in the worst possible way — by withdrawal of only the bank of blade rods — the coupling between boiler and superheater is maximized, and the measured reactivity change due to superheater flooding amounts to a decrease of 0.64% k_{eff}. This measurement was made with no shims in the reactor. The presence of boiler-superheater shims will, of course, reduce the absolute magnitude of the flooding effect substantially.

The reactivity effect of superheater flooding is made up of two components. The more important of these is the change in k_{∞}. This component may be positive or negative, the sign depending upon the fuel/moderator ratio. The other component is the change in net neutron leakage from the core. It is always positive, regardless of fuel/moderator ratio. This component is more important near the edge of the core, and in the cold condition it overrides the k_{∞} component in the outer rows of superheater fuel elements. Thus, if the superheater were to be flooded progressively, from the outermost rows of fuel elements to the innermost, the reactivity would first increase slightly, and would then decrease substantially; the net effect for full flooding would correspond to the values quoted above. The measured effects of progressive superheater flooding, by passes, are given in Table 309-IV. Each pass consists of two adjacent rows of superheater fuel rods, the outermost pass being numbered 4, and the innermost numbered 1 (see Fig. 309-2).

The total effect of superheater flooding in the hot reactor has been determined by calculation rather than by experiment, since the simulation of the hot reactor in the critical assembly did not duplicate the operating reactor in sufficient detail to reproduce the

Table 309-IV MEASURED REACTIVITY CHANGES DUE TO PASS-BY-PASS FLOODING OF THE ENTIRE SUPERHEATER (COLD MOCKUP, UNSHIMMED)

Superheater Passes Flooded	Critical on Corner Rod Bank, All Other Rods In		Critical on Blade Rod Bank, All Other Rods Except Center Rod In	
	Critical Bank Position, inches withdrawn	Reactivity Change from Completely Unflooded Condition, % keff	Critical Bank Position, inches withdrawn	Reactivity Change from Completely Unflooded Condition, % keff
None	41.92	0.000	32.52*	0.000
No. 4	41.32	+0.032	32.52*	+0.061
No. 4 and 3	41.27	+0.035	32.52*	+0.076
No. 4, 3 and 2	42.48	-0.030	32.52*	-0.076
All	42.48 + 11.23 inches withdrawal of rod No. 2	-0.303	32.52*	-0.636

* For these measurements the slab-rod bank position was held constant and the reactivity change was evaluated by moving rod No. 1.

absolute value for this type of reactivity coefficient. The effect of superheater flooding in the shimmed, operating reactor, as determined by a two-dimensional calculation in the transverse plane of highest power density, is a reactivity gain of 0.16% k_{eff}. Measurements for the same case, to the extent that it could be duplicated in the simulated hot critical assembly, gave a reactivity change of nearly zero for complete flooding of the superheater. The pass-by-pass results of the measurement are given in Table 309-V. Again, it is evident that the net effect is the result of opposing positive and negative effects, whose relative magnitudes vary with position in the superheater; but in this case, the net effect is always positive. It may be expected that the maximum attainable reactivity gain due to partial flooding of the hot BONUS superheater will be somewhat larger than the gain due to total flooding, but will not exceed 0.4% k_{eff}.

3. Temperature and Steam Void Coefficients of Reactivity

The uniform temperature coefficient of reactivity in the hot (540°F) BONUS reactor is -0.03% k_{eff} per degree F, and the void coefficient of reactivity, for voids in the boiler coolant (for a change from 11% void to 20% void), is -0.12% k_{eff} per % void uniformly distributed in the boiler coolant.

When the cold reactor is examined, it is difficult to define the temperature and void coefficients of reactivity because of the high excess reactivity of the reactor. The coefficients will vary, depending upon the particular control rod configuration with which the reactor is made critical. For example, the measured temperature coefficient of reactivity in the cold (50 to 120°F) shimmed, mockup was -0.0035% k_{eff}/°F when the assembly was made critical by withdrawal of only the corner rods, and -0.000613% k_{eff}/°F when it was made critical on the blade rods. The coefficients will be essentially the same in the cold BONUS reactor for the same control-rod configurations.

The temperature and void coefficients may be considered to consist of two components, one being the coefficient for k_∞ in the core without control rods, the other being a leakage factor which includes the effect of neutron leakage into control rods as well as leakage out of the core. The coefficient for k_∞ is independent of the control-rod configuration, and may be positive or negative, depending upon the composition of the core. If it is found to be negative, or nearly negative, then the coefficient for k_{eff} will always be negative, for the effect of leakage, although it will vary in magnitude with the control-rod configuration, will always be negative. The calculated temperature coefficient for k_∞ in the cold unrodded BONUS boiler region is small, but positive, and equal to 0.0053% k_∞ per degree F. The results of the measurements described above show that the leakage component overrides this positive component, to give a net negative coefficient for k_{eff}. It is worth noting that this type of situation is not unusual; it is the one which always occurs, for example, in a fully enriched reactor.

Table 309-V MEASURED REACTIVITY CHANGES DUE TO PASS-BY-PASS FLOODING OF THE ENTIRE SUPERHEATER (SHIMMED HOT SIMULATED ASSEMBLY)

Superheater Passes Flooded	Critical on Side-Rod Bank, All Other Rods Out		Center Rod In, Critical on Slab-Rod Bank, All Other Rods Out	
	Critical Bank Position, inches withdrawn	Reactivity Change from Completely Unflooded Condition, % keff	Critical Bank Position, inches withdrawn	Reactivity Change from Completely Unflooded Condition, % keff
None	21.10	0.00	30.78	0.00
4 and 3	20.27	+0.18	29.69	+0.17
4, 3 and 2	20.03	+0.23	29.37	+0.22
All	21.11	-0.002	30.75	+0.005

If only the coolant water in the boiler is considered (i.e., the water in the control-rod channels and in the central "water hole" of the fuel assembly is considered not to participate in the temperature rise), then the temperature coefficient of k_∞ is negative, and equal to -0.0091% k_∞ per degree F. This difference of behavior between the "coolant" water and the "moderator" water is due to the thermal neutron flux peaking in the "moderator" water. It is a desirable characteristic, since it ensures that heating of the "coolant" water, as would occur in a rapid power transient, will decrease reactivity, but at the same time allows the temperature defect due to the general heating of the reactor water to be reasonably small.

The calculated steam void coefficient of k_∞, for steam formed in the boiler coolant water in the cold reactor, is -0.023% k_∞ per % void.

The buildup of Pu^{239} with fuel burnup contributes a positive component to the temperature and void coefficients of reactivity. To obtain an upper limit estimate of this contribution, calculations were performed of the temperature and steam-void coefficients of k_∞ for the cases of zero burnup and 10,000 Mwd/ton U burnup of the boiler fuel. (As above, only the coolant water is assumed to participate in the temperature rise or steam voiding.) The results are presented in Table 309-VI, wherein the positive contribution of Pu^{239} is evident from a comparison of the coefficients for the two burnup cases. The temperature coefficient of k_∞ for the cold reactor with Pu^{239} buildup corresponding to 10,000 Mwd/ton U is very slightly positive, amounting to +0.00062% $k_\infty/^oF$. However, the negative effects of leakage are at least an order of magnitude larger, and consequently the net coefficient for k_{eff} will be negative. Because of the low conversion ratio (0.344) in the superheater, the Pu^{239} buildup in that region will not be important in its affect on the coefficient values.

Table 309-VI EFFECT OF Pu^{239} BUILDUP WITH BURNUP ON TEMPERATURE AND STEAM VOID COEFFICIENTS* OF k_∞ FOR BONUS BOILER

	Void Coefficient, % k_∞/% void		Temperature Coefficient, % $k_\infty/^oF$	
Condition	No Burnup	10,000 Mwd/ton U	No Burnup	10,000 Mwd/ton U
Cold	-0.023	-0.015	-0.0091	+0.00062
Hot	-0.045	-0.036	-0.012	-0.0084

* Only coolant-water participates in the temperature rise or steam voiding.

4. Significance of Temperature and Void Coefficients

The above effects of temperature changes and voids, insofar as they affect the practical operation of the reactor, are summarized in the following paragraphs.

At room temperature, the over-all, isothermal, temperature coefficient of reactivity of the new reactor is negative; the value of the coefficient will depend upon the control-rod configuration at criticality, but if the normal control-rod operating program is adhered to, it will amount to -0.0035% $k_{eff}/^{o}F$. Thus, the shutdown margin of the reactor will increase as the temperature is raised. If for any reason the temperature of only the coolant water should be raised — as for example by the generation of power in the fuel elements — the temperature coefficient of reactivity relative to the temperature of that water would be considerably more negative, and at least as great as -0.0091% $k_{eff}/^{o}F$. If steam voids were formed in the coolant water of the cold boiler region, the reactivity effect would be negative, and at least as great as -0.023% k_{eff} per % void in the coolant water. If the superheater were voided, the reactivity effect again would depend upon the configuration of control rods at criticality, but if the normal control-rod operating program were adhered to, the effect of voiding the entire superheater would be a reactivity gain of about 0.30% k_{eff}. For partial flooding, the effect can vary from positive to negative (Table 309-IV).

As the reactor temperature is raised, the reactivity decreases continuously, and both temperature- and void-coefficients of reactivity increase to higher negative values. When the temperature has been increased from room temperature to 540°F, the loss of reactivity (temperature defect) amounts to 0.057, and the isothermal temperature coefficient of reactivity is -0.03% $k_{eff}/^{o}F$. The average void coefficient of reactivity, for the range 11% void to 20% void, for voids distributed uniformly in the coolant water, is -0.12% k_{eff} per % coolant void. However, the actual reactivity worth of the steam voids in the operating reactor will depend upon the spatial distributions of power and void in the core. These characteristics — and, for that matter, the average void content itself — will depend upon the pattern of control-rod insertion in the core. For the pattern corresponding to early, equilibrium-xenon operation, the presence of the average 0.23 volume fraction of steam in the coolant water, with its expected distribution, decreases reactivity by 3.3% k_{eff}. This corresponds to an effective steam-void coefficient of reactivity of -0.143% k_{eff} per % void in the coolant. The effective coefficient is not expected to exceed this value as operating conditions change. The reactivity change caused by a change from completely flooded to completed voided superheater in the hot (540°F) reactor is -0.16% k_{eff}. The effect due to voiding the first pass only (Fig. 309-2) is larger, and may amount to as much as -0.4% k_{eff}.

As fuel exposure increases, and plutonium builds up, the temperature- and void-coefficients of reactivity will become more nearly positive. At room temperature the over-all, isothermal, temperature coefficient of reactivity may become slightly positive by the time the equilibrium fuel composition has been reached. This is not a matter of concern, since it means only that the shutdown margin must be adequate for that temperature which gives the maximum reactivity; the shutdown margin will be large by the time the equilibrium fuel composition is reached. The coefficients for the coolant water, which are the ones significant in rapid reactivity transients, will remain negative.

D. Boiler-Superheater Power Split

The fraction of the total power which is generated in the superheater must always be held at the value which gives the proper steam outlet temperature, and the power generation must be evenly divided among the four superheater banks to avoid overheating any one bank. Both of these objectives may be accomplished by adjustment of the depth of insertion of the blade rods. The adequacy of the adjustment is detected directly by observation of the steam outlet temperatures from the eight individual superheater octants. If the general level of outlet temperature is too high, the depth of insertion of all blade rods is to be increased until the temperature is reduced to its proper level. If the outlet temperature from an individual octant is too high, the insertion of the blade rod adjacent to that octant is to be increased until the outlet temperature is reduced to its proper level. It is expected that no substantial asymmetries will occur in the power distribution, since the BONUS core is too small to support spatial oscillations of the power distribution or for the power distribution to be very sensitive to small asymmetries in reactivity. Nevertheless, the individual outlet temperature indications will be sensitive detectors of any asymmetries that do occur, and the blade rods are to be used to eliminate them.

The normally correct percentage of power generation in the superheater under normal operating conditions is 26%. Because of the extra enrichment which is incorporated in the superheater fuel to extend its reactivity lifetime, the percentage generation in the superheater would initially be considerably higher than this value if there were no absorber present between the boiler and the superheater. Full insertion of the blade rods would reduce the superheater generation well below the correct value, and the proper generation could be attained by operating with the blade rods inserted partially, but rather deeply into the core. This deep partial insertion of the strong blade rods would accentuate the downward skewing of the axial power distribution in the core, and would give an undesirable increase in the axial maximum/average power density ratio. To avoid this effect in the new core, the part-length, absorbing boiler-superheater shims are installed in the core. These shims make it possible for the blade control rods to achieve the proper boiler-superheater split under most conditions without

being inserted more than about 24 inches into the core. The shims also perform the function of depressing the thermal neutron flux in the first row of superheater fuel elements, adjacent to the boiler, and of thus preventing the power peak which tends to occur in that row of elements because of the sudden transition from the boiler composition to the more highly enriched superheater composition. In the later stages of superheater life, shims are not required for this purpose, because burnup of the superheater fuel reduces the magnitude of the power peak.

As the blade control rods are moved to adjust the superheater power, they will of course change the general reactivity level of the reactor, and some motion of the cruciform rods, in the opposite direction, will be required to compensate this effect. The movement of the cruciform rods will also affect the boiler—superheater power split, generally in the direction opposite to the change in power split produced by the blade-rod movement. Thus the blade and cruciform rods may be moved together in such a way as to hold reactivity constant, but to change the power split as desired.

Table 309-VIII shows the effects of various control-rod insertion patterns on the power split. It is evident from the table that complete withdrawal of the blade rods from the 30-inch position just about compensates the effect on power split of complete withdrawal of the center rod from its fully inserted position. In other words, nearly the full reactivity worth of the center rod, plus part of the worth of the blade rods, can be utilized to extend reactivity lifetime without departing from the proper power split. When a power fraction less than 26% is required in the superheater because of changes of operating conditions, a further reduction may be obtained, in the new core, by inserting the blade rods farther, and maintaining reactivity by withdrawal of the center rod. This will not, of course, be possible beyond a certain point of core depletion, because the available reactivity will be insufficient. The relationship of power split to available reactivity lifetime is discussed in Section F, below.

Table 309-VII PERCENTAGE POWER GENERATION IN THE SUPERHEATER FOR VARIOUS CONTROL ROD CONFIGURATIONS*

Center-Rod Position, inches out	Side-Rod Bank Position, inches out	Blade-Rod Bank Position, inches out	Percentage Power in Superheater
0	54 (full out)	30	27
12	54	30	26
16	54	30	25
20	54	30	25
30	54	30	24
54 (full out)	54	30	23
0	54	30	27
0	54	40	29
0	54	54	32
20	20	40	28
30	30	30	25
20	30	30	25
20	20	30	26
20	54	35	26
54	54	40	24

* Corner-rod bank is full out for all listed configurations.

E. Spatial Distribution of Power

In the following section the spatial power distributions in the boiler and the superheater are discussed primarily in terms of their over-all maximum/average power density ratios. This ratio is the quantity of direct significance in the boiler, where the limitation on power level is set by the design value of the maximum fuel centerline temperature. In the superheater, where the limitation is set by the maximum permissible fuel jacket temperature, the maximum/average ratio does not contain all pertinent information about the power distribution. Its significance is, however, adequate for characterizing the distributions; the predicted superheater fuel temperatures were, of course, calculated from detailed power distributions.

For an understanding of the significance of the power distributions, it is necessary to consider briefly the method by which they have been predicted. In each region (i.e., boiler and superheater) the over-all maximum/average power density ratio is broken down into two components:

Over-all max/avg = (radial max/avg in the transverse plane which contains the point of maximum power density) x (average power density in transverse plane containing the point of maximum power density)/(power density averaged over all transverse planes).

For convenience, the two terms of the above expression will be referred to as the radial max/avg ratio and the axial max/avg ratio, respectively.

Consistently with the above breakdown of the over-all distribution, the radial distribution has been calculated in detail, by a two-dimensional (PDQ) calculation with mesh points so spaced as to give a fuel-rod-by-fuel-rod distribution. This distribution takes account of all local effects in the transverse plane, as well as the distributed effects. The axial distribution -- which, according to the breakdown defined above, is the axial distribution of the radial average of the power density -- has been calculated in one dimension (WANDA code). In both cases the calculation method has been checked in detail against measured power distributions from a cold critical mockup of the hot, operating reactor. Typical comparisons between calculated and measured distributions are shown in Fig. 309-5 and Fig. 309-6. Figure 309-5 shows the axial distribution in the boiler for a relatively complex pattern of control-rod insertion. The agreement for several other patterns was comparable, the calculated max/avg ratio being from 1% to 8% higher than that measured. Figure 309-6 shows the measured and calculated radial distributions in the hot plane, for the case in which the central control rod is fully inserted, and all other control rods are withdrawn to a substantial height above the hot plane. This is the most complicated control-rod configuration that will occur in the hot plane in the operating reactor. In arriving at the radial power distribution for the new, operating, reactor, the calculated power densities for the individual fuel rods were adjusted, by multiplying by the ratio:

$$\frac{\text{(Measured power density in critical mockup)}}{\text{(Calculated power density in critical mockup)}}$$

No corrections were applied to the calculated axial distributions, since the comparison with the mockup indicated that any deviations they display are in the pessimistic direction.

When control rods are partially inserted in the reactor, the result is to skew the axial power distribution toward the bottom of the core and to increase the axial maximum/average ratio. To avoid

this effect as much as possible, one attempts to minimize the partial insertion of strong control-rod banks. In the BONUS reactor, the center rod is used as much as possible to decrease the required degree of insertion of the strong side-rod bank during power operation. As a result, the center rod is used over its full range of travel, but no multi-rod bank is ever fully inserted during high-power operation. The peak in the axial power distribution always occurs below the tips of the rods in the multi-rod banks; consequently there are only two radial power distributions that must be considered in the hot plane: the distribution with the center rod inserted, and the distribution with the center rod withdrawn. These two radial distributions, determined in the manner described above, are shown in Fig. 309-7 and Fig. 309-8. It is evident that the center control rod has a substantial flattening effect, and that, whenever possible, the center rod should be inserted sufficiently deeply in the reactor for its tip to penetrate the hot transverse plane. This will generally occur if the extent of withdrawal of the rod is no more than 12 inches.

Three characteristic axial distributions are shown in Fig. 309-9, for different patterns of control-rod insertion, all of which give superheater power fractions in the range 25% to 27%. Each pattern corresponds to a different amount of reactivity under control by the rods, the difference between the extremes (curves C and B) amounting to about 3.5% k_{eff}, enough to compensate the reactivity change due to the build-up of xenon and samarium.

Actually, the rod pattern corresponding to curve C (Fig. 309-9) is not the optimum one for achieving that particular reactivity level, since the center rod is withdrawn too far to flatten the hot-plane radial power distribution effectively. A slight change, involving insertion of the center rod to the 12-inch level, a slight additional insertion of the blade rods to preserve the power split and slight withdrawal of the side-rod bank to preserve the reactivity level, will flatten the hot-plane radial distribution substantially without changing the axial distribution appreciably. Such a pattern is the expected one for the initial full-power operation, before xenon and samarium concentrations have built up. The power distribution is the poorest one that is expected during the life of the reactor, the maximum/average ratio in the boiler amounting to 3.60, the product of the axial ratio given by curve C of Fig. 309-9 (2.26) and the radial ratio given by Fig. 309-7 (1.59). This over-all max/avg ratio is just below the full-power design-limit ratio of 3.70.

As xenon and samarium build up, and reactivity is lost by fuel burnup, control rods are withdrawn progressively, and the axial power distribution improves, as illustrated by curves A and B of Fig. 309-9. Under the operating conditions represented by curve A, the over-all max/avg ratio for the boiler would drop as low as $(1.63)(1.59) = 2.59$; however, this particular rod pattern is an inconvenient one for operation, since neither the center rod nor the side-rod bank is in a position for effective reactivity adjustment. Over most of the operating life of the

core, the side rods will be out and the center rod will be partially withdrawn, and an axial distribution like that of curve B (Fig. 309-9) yielding an axial max/avg ratio of about 1.77, will be typical. Typical values of the over-all boiler max/avg ratio will be (1.77)(1.59) = 2.82, when the center rod is inserted far enough to flatten the radial distribution in the hot plane, and (1.77)(1.88) = 3.33, when the center rod is withdrawn above the hot plane. These values are summarized in Table 309-VIII.

Table 309-VIII MAXIMUM/AVERAGE POWER DENSITY RATIOS IN THE BOILER

Operating Condition	Radial Hot Plane Max/Avg	Axial Max/Avg	Over-all Max/Avg
New core, no xenon or samarium	1.59	2.26	3.60
New core, equilibrium xenon (center rod about 1/4 out)	1.59	1.77	2.82
Partially exposed core (center rod about 1/2 out)	1.88	1.77	3.33

In the case of the superheater, the power distribution is distorted to a lesser degree by the partial insertion of control rods. The simulation of the superheater region was more precise than the simulation of the boiler, in the simulated hot assembly, and comparisons of calculation and measurement have shown that, for the superheater, the measured distributions may be used directly, with a minor correction for a slightly shorter core in the critical assembly. The measured distributions, for the worst case discussed above (new core, no xenon or samarium), are shown in Fig. 309-10 and Fig. 309-11. The hot-plane radial max/avg ratio is 1.612, and the axial ratio is 1.80, giving a total max/avg ratio of 2.90.

Since the above maximum/average ratios are based on rod-by-rod power determinations, they include all neutron-physics effects except end-cap flux peaking. There is no end-cap peaking in the superheater, since the fuel elements are full-core length, but there is a small gap between the upper and lower fuel elements of the boiler, located at the central transverse plane. Power peaking at this point has been allowed for by coring the fuel pellets in the corner fuel-assembly positions (the hottest positions) for a 2-inch length adjacent to the end cap. The coring allows the elements to accept a 15% power peaking without overheating; this is estimated to be more than adequate. A further safety factor exists, in that the hottest transverse plane is always located well below the central plane for any practical operating conditions.

F. Operating Characteristics and Fuel Burnup

In this section, the reactor will be described at the various significant stages in its lifetime, and its operating characteristics, insofar as they change significantly at those stages, will be discussed. In some instances it is necessary to describe certain operating procedures in a general way. This is done only for the sake of clarifying the reactor characteristics; the section is not intended to define operating procedures.

1. Initial Cold Criticality

The reactor initially will be loaded with fuel assemblies and shims, as indicated in Table 309-I. It will be made critical at room temperature, to check physics characteristics, although cold criticality is not part of the nornal operating procedure. The shutdown capacity will be tested, by withdrawing, in sequence, two opposite control rods of the side-rod bank (e.g., rods 3 and 5, Fig. 309-1). If criticality does not occur before both rods are fully withdrawn, the shutdown margin will be judged to be adequate, and will be at least 3% k_{eff}. If the reactor is still far from criticality after the two rods are withdrawn, further rods will be withdrawn, as may be appropriate, to achieve criticality, and the additional shutdown margin will be evaluated by period calibrations of the rods withdrawn.

There is a reasonable probability that the initial shim configuration may not yield a shutdown margin in the desired range, for the reactor is a complex one, and the acceptable range is expected to be small, extending from 3% to about 4%. If the shutdown margin is higher than about 4%, it is probable that the reactor will be deficient in operating reactivity. If adjustments of the margin are needed, they will be made by changing the total absorption by the shims. Unless the need for large changes becomes apparent, adjustments will be made by increasing or decreasing the fraction of heavily loaded shims, without deviating from the shim types described in Table 309-I.

In this condition of the reactor, the reactor physics characteristics are as given in Table 309-IX.

2. Hot Criticality

Under the normal operating procedure, the reactor is not made critical until it has been pre-heated nearly to the operating temperature of 540°F. Criticality will be achieved by withdrawing first the corner-rod bank and then the side-rod bank; upon the first normal start-up, it should occur with the corner rods fully withdrawn and the side rods less than half withdrawn. The significant reactor physics characteristics under these conditions are listed in Table 309-X.

Table 309-IX REACTOR PHYSICS CHARACTERISTICS
OF THE COLD, CLEAN REACTOR

k_{eff}, all control rods out	1.164
Reactivity worth of shims	-0.036
Reactivity worth of single most effective shim	-0.0022
Shutdown reactivity margin (shims in)	$0.030^{+0.01}_{-0.00}$
Worths of control-rod banks (when withdrawn from rodded reactor):	
Center rod	-0.009
Side rod bank	-0.057
Corner rod bank	-0.052
Blade rod bank (no superheater shims)	-0.057
Worths of single control rods (when withdrawn from rodded reactor):	
Side rod	-0.015
Corner rod	-0.0104
Blade rod (no superheater shims)	-0.0055
Side rod adjacent to withdrawn corner rod	-0.04
Doppler coefficient of reactivity, $\Delta k_{eff}/^{\circ}F$	-1.0×10^{-5}
Isothermal temperature coefficients, $\Delta k_{eff}/^{\circ}F$:	
Critical by withdrawing corner rods	-3.5×10^{-5}
Critical by withdrawal of blade rods	-0.61×10^{-5}
Temperature coefficients of k_{∞} in boiler, $\frac{\Delta k_{\infty}}{k_{\infty}}/^{\circ}F$:	
Isothermal	$+5.3 \times 10^{-5}$
Coolant temperature	-9.1×10^{-5}
Coolant void coefficient of k_{∞} in boiler, $\frac{\Delta k_{\infty}}{k_{\infty}}/\%$ void in coolant	-23×10^{-5}
Reactivity change due to superheater flooding:	
Critical by withdrawal of corner rods	-0.00303
Critical by withdrawal of blade rods	-0.00636
Prompt neutron lifetime, sec	48×10^{-6}
Effective delayed neutron fraction	0.00735

Table 309-X REACTOR PHYSICS CHARACTERISTICS
OF NEW, HOT, CLEAN SHIMMED REACTOR AT ZERO POWER
WITH ZERO STEAM VOID

k_{eff}, all control rods out	1.092
Shutdown margin	$\geq$0.09
Reactivity worths of the control-rod banks	
Center rod	-0.012
Side rod bank	-0.076
Corner rod bank	-0.069
Blade rod bank (no superheater shims)	-0.076
Reactivity worths of individual control rods	
Side rod	-0.020
Corner rod	-0.014
Blade rod (no superheater shims)	-0.0074
Isothermal temperature coefficient of reactivity, $\Delta k_{eff}/^{o}F$	-0.0003
Reactivity change due to flooding of superheater	+0.0016
Prompt neutron lifetime, sec	54×10^{-6}

3. Initial Power Operation

To progress from the stage of hot criticality to that of high power operation, the power is first raised, by withdrawal of the side-rod bank, until steam is being generated at a substantial rate. During this period, and until a reliable measurement of the steam outlet temperature can be obtained, the blade rods are left fully inserted to keep the superheater power fraction as low as possible. With the outlet steam temperature under observation, the blade rods are withdrawn, while the side-rod bank is used to control the total power level, until the normal steam outlet temperature is reached. The total power level may then be increased further, up to the design level, while the outlet temperature is held constant, by appropriate adjustments of the side-rod and the blade-rod banks. If necessary to achieve the desired boiler-superheater power split, the center rod may also be withdrawn, but no more than 12 inches.

Increasing the power from zero to the full design value will require the addition of some 4% of reactivity to compensate for the effects of steam voids and Doppler coefficient. The approximate control-rod configuration predicted for the early full-power operation is: center rod withdrawn 12 inches; side rods withdrawn 20 to 30 inches; blade rods withdrawn 20 to 30 inches. In order to avoid exceeding the permissible value of the maximum/average power density ratio in the boiler, the average position of the side-rod and blade - rod banks, when full power is being generated, should be at least 25 inches withdrawn, unless the power distribution for the specific configuration used has been checked by calculation. The center rod may be used anywhere in the range from zero to 12 inches of withdrawal without exceeding the permissible maximum/average ratio. If it should appear necessary to violate these restrictions at the initial full-power operating point, the indication would be that the operating excess reactivity is too high; such a situation can be corrected by increasing the absorption of the shims.

As operation is continued, the xenon-135 concentration will build up, finally reaching an equilibrium value corresponding to a reactivity loss of 2.8% k_{eff}; about half of this reactivity loss will occur in the first 12 hours of full-power operation and about 80% in the first 24 hours. The reactivity decrease will be compensated mainly by withdrawal of the side-rod bank, although some withdrawal of the blade rods will probably be required also to maintain the proper power split. The effect will be improvement of the axial and total maximum/average power density ratios.

By the time the full equilibrium xenon concentration has developed, the side rods will be almost fully withdrawn, and the blade rods will be withdrawn about 30 inches. From this point on the reactivity will vary only slowly, if the power is held constant, in response to the burnout of fuel, the burnout of boron from the shims, and the growth of Samarium-149. If power is reduced, a small xenon transient will occur, as shown in Fig. 309-12.

The power distribution is not highly peaked once the side rods have been almost fully withdrawn: the maximum/average ratio ranges from about 2.8 to 3.3, depending upon whether the center rod is inserted far enough to flatten the hot-plane radial distribution, as indicated in Table 309-VIII. In this condition (and in all conditions of lesser reactivity), the center rod and the blade rods may be "traded" against each other to vary the boiler-superheater power split over a relatively wide range, as may be required by steam plant operating conditions, without danger of encountering prohibitively high power peaking factors (see Table 309-VII).

The reactor physics characteristics of the reactor in this early, equilibrium-xenon operating condition are summarized in Table 309-XI.

4. Burnup of Fuel and Shims

As operation proceeds, the B-10 in the shims burns out gradually. Figure 309-13 gives the net reactivity change in local sections of the BONUS boiler due to simultaneous burnup of the shims and local fuel for the hot-operating condition. In Fig. 309-14 these results have been properly combined, along with the reactivity change due to fuel burnup, to give the net change of reactivity (in terms of an effective change in k_∞ of the total boiler section of the reactor) as a function of the average burnup of boiler fuel. Although the boron burnout is nearly linear over the exposure range involved, the net reactivity increases after equilibrium samarium buildup. Basically, this is because the Pu^{239} fission cross section is very much larger than that of U^{235} at the neutron temperature corresponding to reactor operation. Consequently, the growth of the Pu^{239} content of the fuel tends to enhance the thermal utilization, even as the burnup of boron has a similar effect. This effect of the Pu^{239} cross section is small at room temperature and hence the cold shutdown margin is not affected.

The reactivity increase indicated in Fig. 309-14 is desirable, for it nearly compensates the effect of Sm-149, as shown in the figure. The samarium build-up, which occurs over about the first 500 Mwd/ton of average fuel exposure (about 1-1/2 months of operation) causes a reactivity loss of about 0.7% in the boiler. Thus the expected behavior, after xenon has come to equilibrium, is a small reactivity loss for the first month or so of operation. This will be followed by an incremental gain after the Sm-149 has reached equilibrium. These expected changes are not large, and may be lost in the variations due to xenon transients (shown in Fig. 309-12) until the major reactivity drop-off begins after some 2000 Mwd/ton exposure (Fig. 309-14). The total predicted net reactivity loss in the first 2500 Mwd/ton exposure of the boiler fuel, including the Sm-149 loss, is 0.2%. This prediction cannot be expected to be highly accurate for such a complex reactor, but reactivity is available for more than a 2% loss if it should prove to occur.

Table 309-XI. REACTOR PHYSICS CHARACTERISTICS OF NEW, HOT SHIMMED REACTOR AT FULL POWER, WITH EQUILIBRIUM XENON

k_{eff}, all control rods out	1.022
Reactivity worth of shims	-0.092
Reactivity worth of equilibrium xenon	-0.028
Reactivity worth of steam voids	-0.033
Reactivity worth of fuel temperature (Doppler)*	-0.013
Effective average void coefficient of reactivity for distributed coolant voids, Δk_{eff}/% void in coolant	-1.43×10^{-3}
Void coefficient of reactivity for 11% to 20% void uniformly in coolant, Δk_{eff}/% void in coolant	-1.2×10^{-3}
Maximum/average power density ratios in boiler:	
Radial	1.59 - 1.88
Axial	1.77
Over-all	2.82 - 3.33
Worst maximum/average power density ratio in superheater:	
Radial	1.61
Axial	1.80
Over-all	2.90

* This is the full Doppler effect. The ambient reactor temperature accounts for 0.004 and the Δ T of the fuel for 0.009.

Burnup will of course occur also in the superheater, and in the boiler-superheater shims, but at a considerably slower rate, since the specific power in the superheater is only about half that in the boiler. Since the power fraction in the superheater must be held at a constant value, the burnup that does occur will appear to have little effect on the over-all reactivity of the reactor, but will be compensated by appropriate positioning of the blade control rods. The necessity for reshimming the superheater will become apparent when the blade rods can no longer provide the required degree of power split adjustment within a reasonable range of movement.

As the over-all reactor loses reactivity, the center control rod will be withdrawn to preserve the power split, as shown in Table 309-VII. Thus the center rod and the blade rods are both sources of reactivity for the compensation of fuel burnup. However, steady state operation with complete withdrawal of either the center rod or the blade rod bank cannot be contemplated, for some reactivity must be left in both to make possible the adjustment of the boiler-superheater power split by "trading" one against the other. It is expected that these sets of rods will not be withdrawn beyond the 40-inch level before the reactor is shut down for reshimming.

Since the reactivity change over an interval between shim changes is small, and since, upon the readjustment of shims, the reactivity is returned nearly to its original level, no important changes in the reactor physics characteristics are expected during the life of the core up to the time all shims have been removed, except for small changes in reactivity coefficients which have been discussed in Section 309-C.

5. Removal of Shims and First Fuel Reloading

As the transition is made from the early, shimmed, core to the equilibrium core through the removal of shims and the initiation of the fuel replacement program, a transition also occurs from a spatial power distribution which is flattened by a nonuniform shim distribution to one which is flattened by nonuniform burnup of the fuel, assisted by the program of fuel shuffling. It is necessary to determine that unacceptable power distributions do not occur during this transition.

Once the equilibrium cycle has been established, the power distribution will be considerably improved over that in the new reactor, for three reasons:

1. The "outside-in" fuel shuffling program flattens the gross radial power distribution.

2. The preferential burnup of fuel in the axial regions of highest power density flattens the gross axial distribution.

3. The preferential burnup of fuel in the corner fuel rods (the hottest rods, because of the enhanced water-hole peaking) of each assembly will reduce the fission cross sections of those rods substantially, relative to the other rods of the assembly, by the time the assembly in question has been moved into the high-power-density region near the center of the core.

Although it is fairly evident that the above effects will give an acceptable power distribution in the equilibrium core, it is not immediately evident that the distribution will be acceptable at some intermediate time, when the flattening effects of the initial shimming are no longer present, but the preferential burnup effects have not yet developed to their full effectiveness. Two conditions may be recognized as the worst: the condition just after the removal of all boiler shims, and the condition just after the first reloading (which involves the removal of the four natural uranium assemblies along with twelve other assemblies). If these two conditions can be shown to be acceptable, it is clear that all other conditions will be acceptable. Calculations for this purpose are described in the following paragraphs.

At the time all the boiler shims are removed, the boiler fuel will have attained an average exposure of 5000 Mwd/ton or more. The average exposure in the hottest transverse plane will be some 50% higher, or about 7500 Mwd/ton because of the axial power peaking. This exposure was assumed for the hot plane, and was distributed, approximately, from rod to rod according to the initial hot-plane power distribution shown in Fig. 309-8. A two-dimensional calculation was then made to determine the power distribution in the exposed hot plane. Figure 309-15 shows the actual distribution of exposure used, and Fig. 309-16 shows the resulting, unshimmed, power distribution. It is evident that the power distribution is a considerable improvement over that of Fig. 309-8. The radial max/ave ratio was decreased from about 1.88 to 1.51.

A similar calculation was made in the axial direction. For this case the axial average burnup was taken as 5000 Mwd/ton. Two control-rod configurations were investigated. In both cases the center rod was fully inserted, but in one case the blade rods were inserted to the thirty-inch level (above the bottom of the core) while in the second case they were inserted to the forty-inch level. In each case the initial axial power distribution was first computed in the new, shimmed, core, with the specified control-rod configuration. The average burnup of 5000 Mwd/ton was then distributed axially over the core, in proportion to the initial power density distribution. The boiler shims were then removed, and the power distribution was calculated for the same control-rod configuration as before. The results of the calculations are given in Table 309-XII. It is evident that, after about 5000 Mwd/ton exposure, the preferential fuel burnup is about equivalent to the initial shims for flattening the axial power distribution.

Table 309-XII COMPARISON OF AXIAL MAXIMUM/AVERAGE POWER DENSITY RATIOS IN INITIAL SHIMMED CORE AND IN UNSHIMMED CORE AT AN AVERAGE BURNUP OF 5000 Mwd/ton

Control Rod Configuration	Axial Max/Avg Initial Core	Axial Max/Avg Exposed Core
Center rod full in; blade rods inserted to 30-inch level	1.63	1.58
Center rod full in; blade rods inserted to 40-inch level	1.50	1.47

When the results of both the radial and axial calculations are considered, it is apparent that the over-all maximum/average power density ratio in the boiler is substantially lower immediately after the boiler shims have been removed than it is in the initial reactor.

To investigate the effect of fuel replacement, a case was analyzed which deviated somewhat, in the pessimistic direction, from the specified fuel replacement program. This was done to reduce the amount of computational effort involved. One of the simplications was to investigate only the radial power distribution, since the axial flattening would obviously be somewhat better at the time fuel is reloaded than at the time of shim removal, investigated above.

For the radial distribution, it was assumed that the fuel burnup pattern, just before reloading, would be the same as that in Fig. 309-15. This assumption is pessimistic, since the average fuel burnup in the hot plane at this time would be considerably higher than 7500 Mwd/ton. In order to give a burnout pattern that was symmetrical by octants of the core (and thus reduce the number of mesh points required for the PDQ calculation), it was assumed that only twelve central fuel assemblies (instead of 16) were replaced. These were the four natural-uranium assemblies and the eight enriched assemblies immediately adjacent to them. The fuel shift pattern is shown in Fig. 309-17.

The radial power distribution in the hot plane of the reloaded core, with the central control rod out, is shown in Fig. 309-18. As expected, the point of highest power density is now at the center of the core. The radial max/ave ratio is, however, slightly lower than that in the new core (Fig. 309-8), even for this pessimistic case. It is therefore concluded that the transition, from the initial, shimmed core, to the equilibrium, unshimmed core, will be accomplished without encountering power distributions less favorable than those in the new core.

6. Summary of Reshimming and Refueling Program

Shutdowns for reshimming and refueling occur, nominally, at intervals of 2500 Mwd/ton exposure of the boiler fuel. This exposure is equivalent to eight months of operation at 80 per cent load factor. In practice, operation between shutdowns will continue so long as reactivity is available and operation is trouble-free, and the intervals between reloadings may be somewhat longer than the nominal value.

At each reloading shutdown adjustments to the boiler loading will be made — either shim adjustments or fuel changes. In general, adjustments to the superheater shims or fuel will be made on every second shutdown, but this program may be modified as operating experience indicates the need. In both boiler and superheater two shim adjustments are planned. The first of these is a change to a new set of shims, and the second is complete removal. When superheater adjustments are made, all superheater fuel assemblies will, at that time, also be rotated 180 degrees about their vertical axes, to equalize the burnup distribution.

The above reloading operations are itemized, for the first few reloading cycles, in Table 309-XIII.

The enriched fuel discharged from the reactor will have had an average exposure of 10,000 Mwd/ton U. The isotopic composition of the discharged fuel is given in Table 309-XIV.

Table 309-XIV. THE ISOTOPIC FUEL CONCENTRATIONS FOR 10,000 MWD/TON BURNUP

Boiler - (Initial U^{235} enrichment, 2.40 wt.%)	
U^{235}, wt.%	1.35
Pu^{239} plus Pu^{241}, gms/kg U	3.36
Total Pu, gms/kg U	4.26
Superheater - (Initial U^{235} enrichment, 3.25 wt.%)	
U^{235}, wt.%	2.06
Pu^{239} plus Pu^{241}, gms/kg U	2.52
Total Pu, gms/kg U	3.08

Table 309-XIII. OUTLINE OF RESHIMMING AND REFUELING OPERATIONS FOR APPROACH TO EQUILIBRIUM CYCLE

1. Start of full-power operation

   Initial loadings described in Table 309-I.

2. First manual reshim operation

   At this point, boiler fuel is at 2,500 Mwd/ton average, accumulated in eight-months operation at 80% load factor. Boiler shims only are changed, being replaced by shims of lesser initial boron content.

3. Second manual reshim operation

   Additional eight-months operation has increased boiler fuel exposure to 5,000 Mwd/ton average. Boiler shims are removed and boiler-superheater shims are changed. Superheater fuel assemblies are rotated.

4. First refueling operation

   Additional eight-months operation. Boiler fuel is now at 7,500 Mwd/ton average. The four natural and twelve innermost enriched boiler assemblies (from positions 1 and 2 in Fig. 309-2) are removed.* Remaining boiler assemblies are moved inward. New assemblies (16) are added in peripheral boiler positions (see Fig. 309-4). No adjustment of superheater.

5. Second refueling operation

   Additional eight-months operation. Sixteen boiler assemblies are replaced as in previous refueling (Fig. 309-4). Superheater shims are removed and fuel assemblies rotated.

6. Additional refueling operations

   Performed approximately at eight-month intervals. Refueling in boiler is repetition of earlier refueling operations. In fourth refueling operation, superheater fuel is removed for the first time. Eight innermost superheater assemblies (adjacent to reactor core centerlines) are removed, the remaining assemblies are shifted toward the centerline, and new assemblies are added at the edges of the superheater (see Fig. 309-4). Further superheater refuelings occur at every second shutdown.

* Removed natural fuel assemblies exposed to 4,000 Mwd/ton
  Removed enriched fuel assemblies exposed to 10,000 Mwd/ton

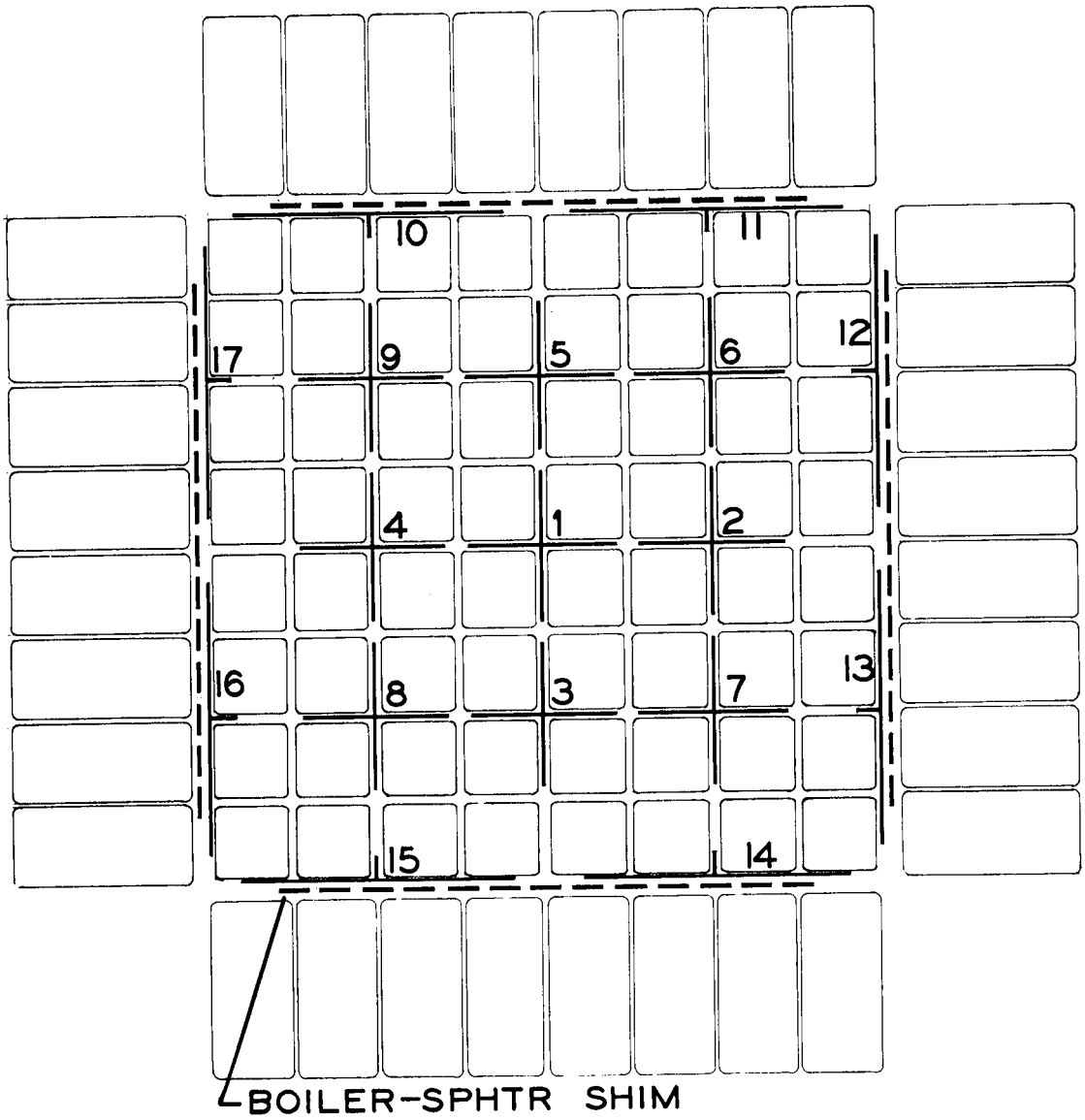

CONTROL ROD BANKS

ROD NUMBER	BANK DESIGNATION
1	CENTER ROD
2,3,4,5	SIDE RODS
6,7,8,9	CORNER RODS
10 TO 17	BLADE RODS

Fig. 309-1 Horizontal cross section of BONUS core showing control rod locations.

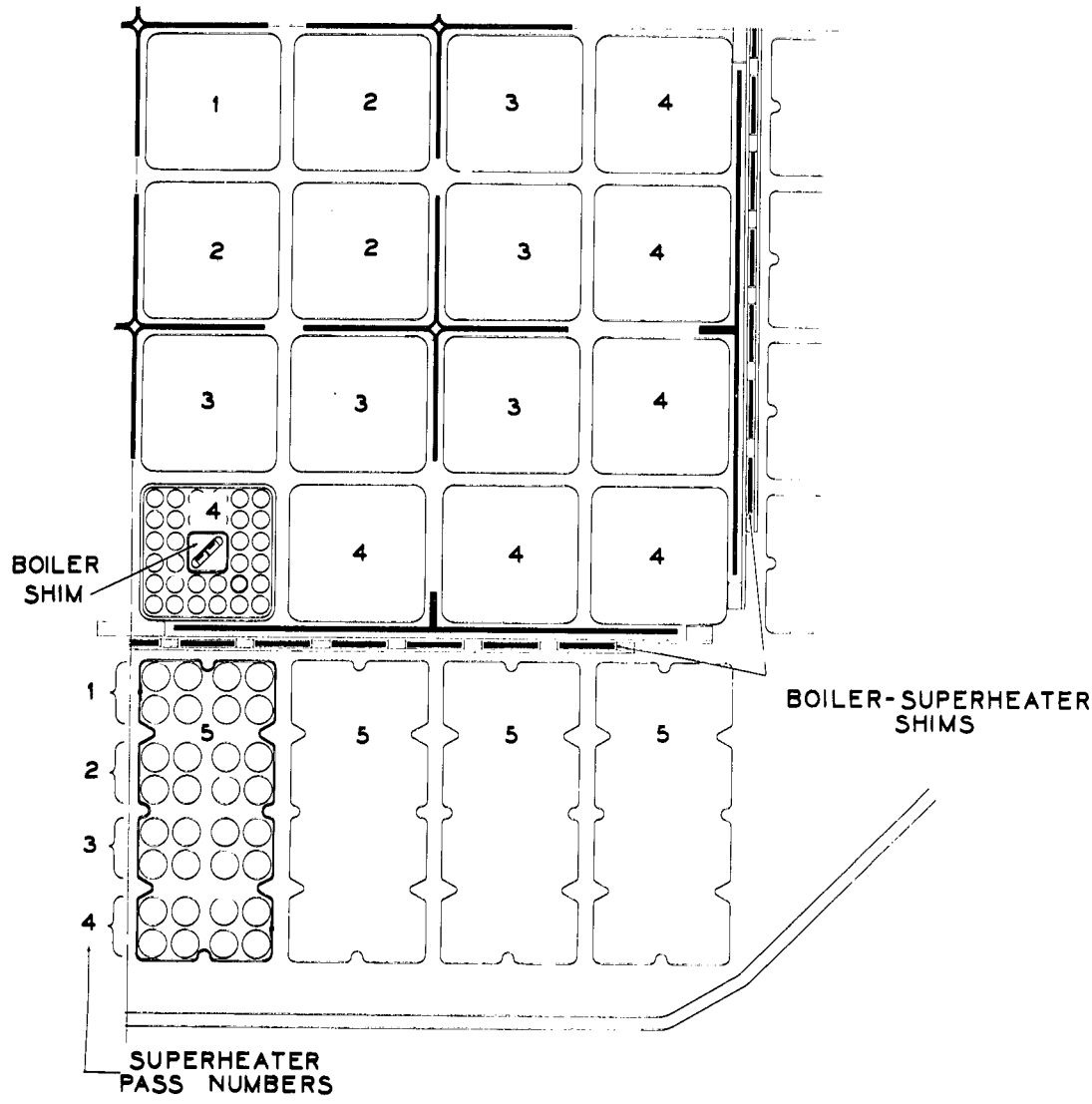

Fig. 309-2 Locations of poison shims and types of fuel assemblies.

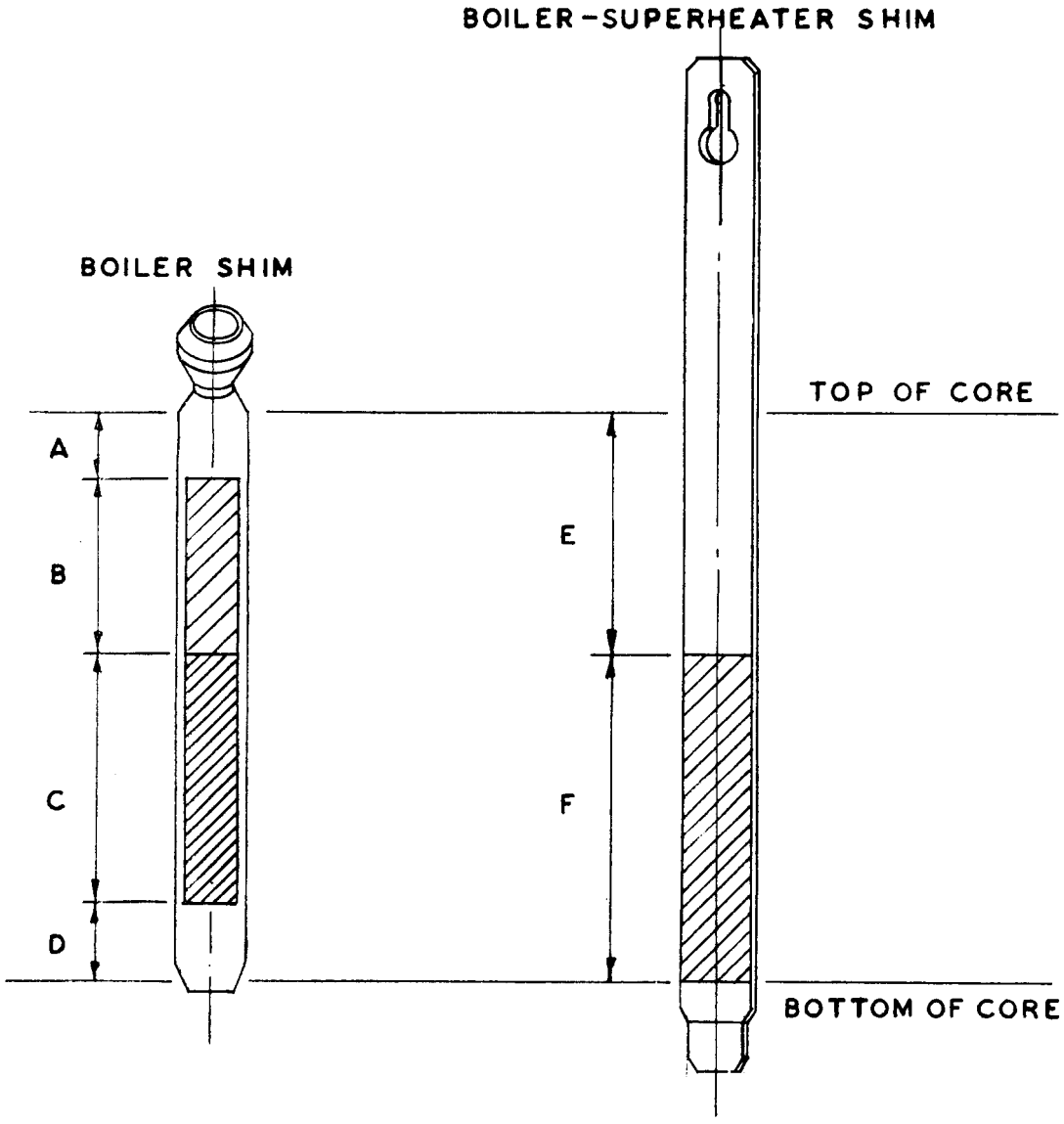

A	6
B	18 5/8
C	24
D	6
E	24 5/8
F	30

Fig. 309-3 Locations of boron-steel strips on shim holders.

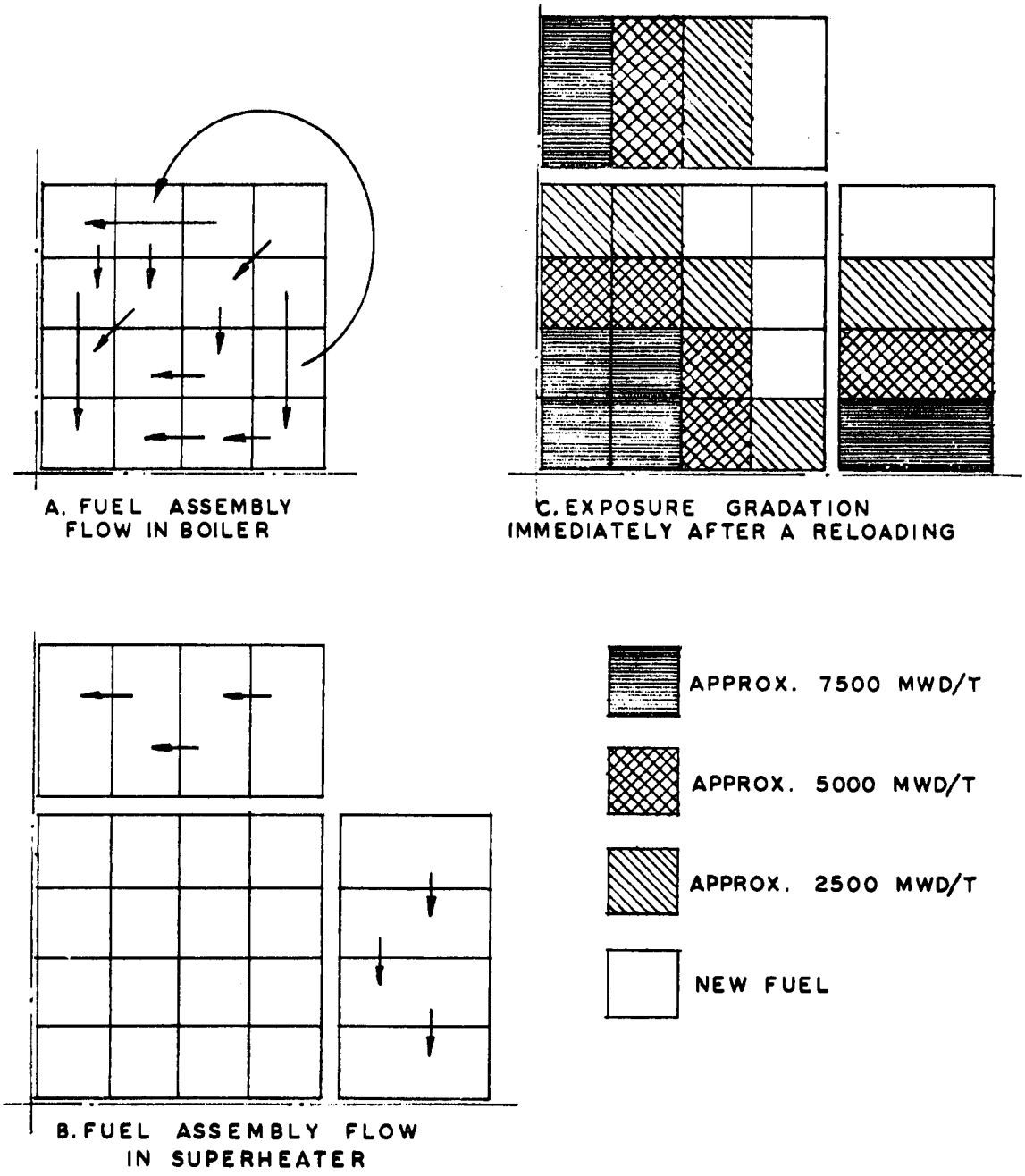

Fig. 309-4 Movement of boiler and superheater fuel in BONUS core for the four-batch reloading plan used in the equilibrium fuel-cycle operation.

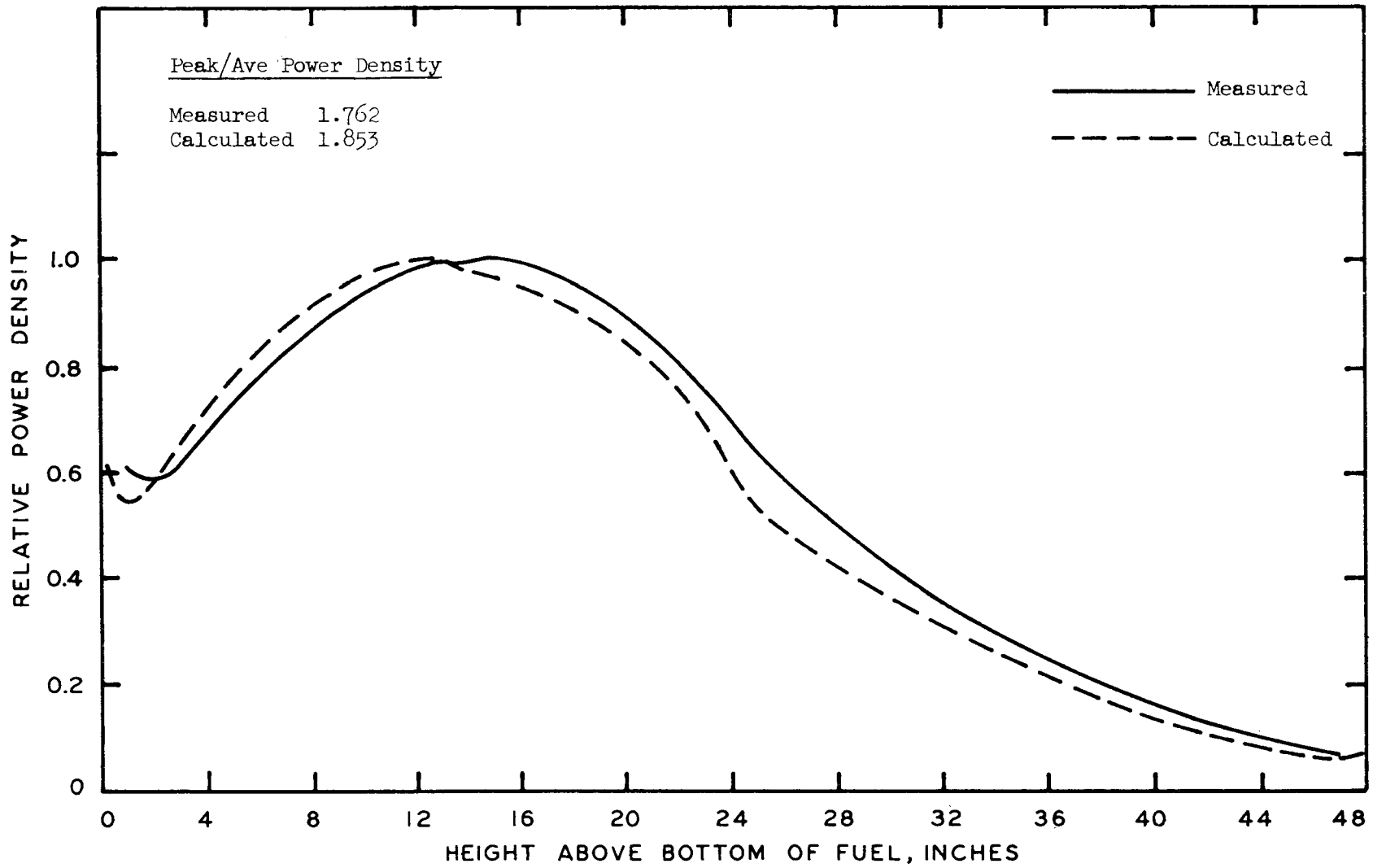

Fig. 309-5 Comparison of measured and calculated gross axial power distribution in enriched boiler section of hot-simulated BONUS critical assembly for control-rod configuration No. 3 (side-rods banked at 23.17 inches and blade rods banked at 30.00 inches, all other rods full-out).

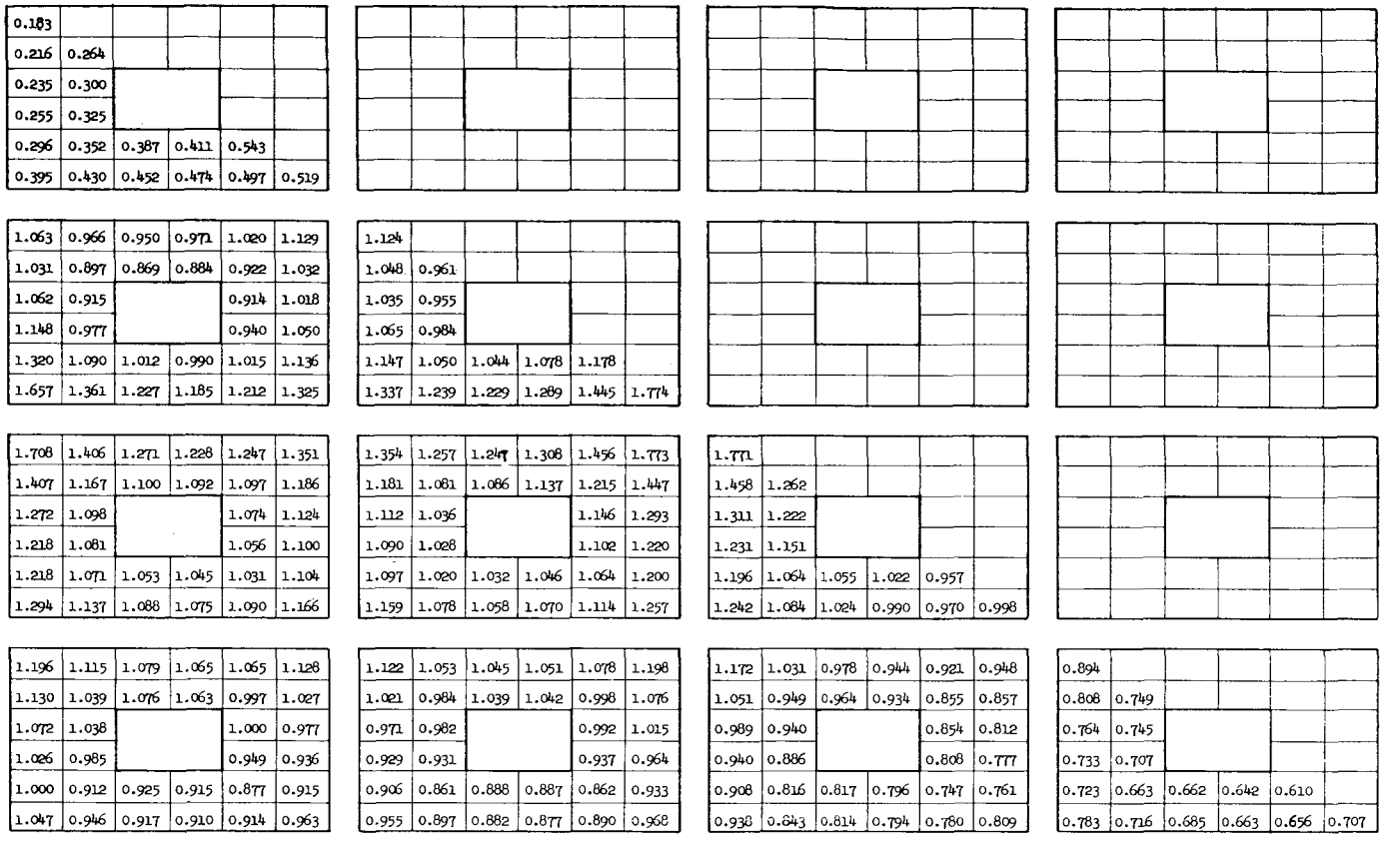

0.183					
0.216	0.264				
0.235	0.300				
0.255	0.325				
0.296	0.352	0.387	0.411	0.543	
0.395	0.430	0.452	0.474	0.497	0.519

1.063	0.966	0.950	0.971	1.020	1.129
1.031	0.897	0.869	0.884	0.922	1.032
1.062	0.915			0.914	1.018
1.148	0.977			0.940	1.050
1.320	1.090	1.012	0.990	1.015	1.136
1.657	1.361	1.227	1.185	1.212	1.325

1.124					
1.048	0.961				
1.035	0.955				
1.065	0.984				
1.147	1.050	1.044	1.078	1.178	
1.337	1.239	1.229	1.289	1.445	1.774

1.708	1.406	1.271	1.228	1.247	1.351
1.407	1.167	1.100	1.092	1.097	1.186
1.272	1.098			1.074	1.124
1.218	1.081			1.056	1.100
1.218	1.071	1.053	1.045	1.031	1.104
1.294	1.137	1.088	1.075	1.090	1.166

1.354	1.257	1.247	1.308	1.456	1.773
1.181	1.081	1.086	1.137	1.215	1.447
1.112	1.036			1.146	1.293
1.090	1.028			1.102	1.220
1.097	1.020	1.032	1.046	1.064	1.200
1.159	1.078	1.058	1.070	1.114	1.257

1.771					
1.458	1.262				
1.311	1.222				
1.231	1.151				
1.196	1.064	1.055	1.022	0.957	
1.242	1.084	1.024	0.990	0.970	0.998

1.196	1.115	1.079	1.065	1.065	1.128
1.130	1.039	1.076	1.063	0.997	1.027
1.072	1.038			1.000	0.977
1.026	0.985			0.949	0.936
1.000	0.912	0.925	0.915	0.877	0.915
1.047	0.946	0.917	0.910	0.914	0.963

1.122	1.053	1.045	1.051	1.078	1.198
1.021	0.984	1.039	1.042	0.998	1.076
0.971	0.982			0.992	1.015
0.929	0.931			0.937	0.964
0.906	0.861	0.888	0.887	0.862	0.933
0.955	0.897	0.882	0.877	0.890	0.968

1.172	1.031	0.978	0.944	0.921	0.948
1.051	0.949	0.964	0.934	0.855	0.857
0.989	0.940			0.854	0.812
0.940	0.886			0.808	0.777
0.908	0.816	0.817	0.796	0.747	0.761
0.938	0.843	0.814	0.794	0.780	0.809

0.894					
0.808	0.749				
0.764	0.745				
0.733	0.707				
0.723	0.663	0.662	0.642	0.610	
0.783	0.716	0.685	0.663	0.656	0.707

1.346	1.527	1.449	1.489	1.453	1.429	1.440	1.338	1.404	1.208	1.299	1.487	1.534	1.458	1.426	1.711
1.379	1.405	1.399	1.394	1.377	1.356	1.332	1.293	1.263	1.201	1.170	1.170	1.134	1.072	1.064	1.417
1.285	1.288	1.284	1.274	1.259	1.238	1.213	1.181	1.144	1.099	1.055	1.009	0.952	0.890	0.881	1.194
1.161	1.159	1.154	1.144	1.129	1.110	1.085	1.056	1.020	0.979	0.933	0.880	0.820	0.759	0.745	1.001
1.028	1.025	1.020	1.009	0.995	0.977	0.955	0.928	0.895	0.857	0.812	0.762	0.704	0.646	0.628	0.833
0.900	0.897	0.891	0.882	0.869	0.852	0.832	0.807	0.777	0.742	0.701	0.654	0.601	0.548	0.527	0.687
0.822	0.819	0.814	0.805	0.792	0.777	0.757	0.734	0.705	0.672	0.633	0.588	0.538	0.487	0.461	0.578
0.990	0.986	0.979	0.968	0.752	0.933	0.908	0.879	0.844	0.803	0.755	0.699	0.636	0.570	0.519	0.575

Fig. 309-6A Calculated hot-plane power distribution in the hot-simulated BONUS critical assembly (center control rod in).

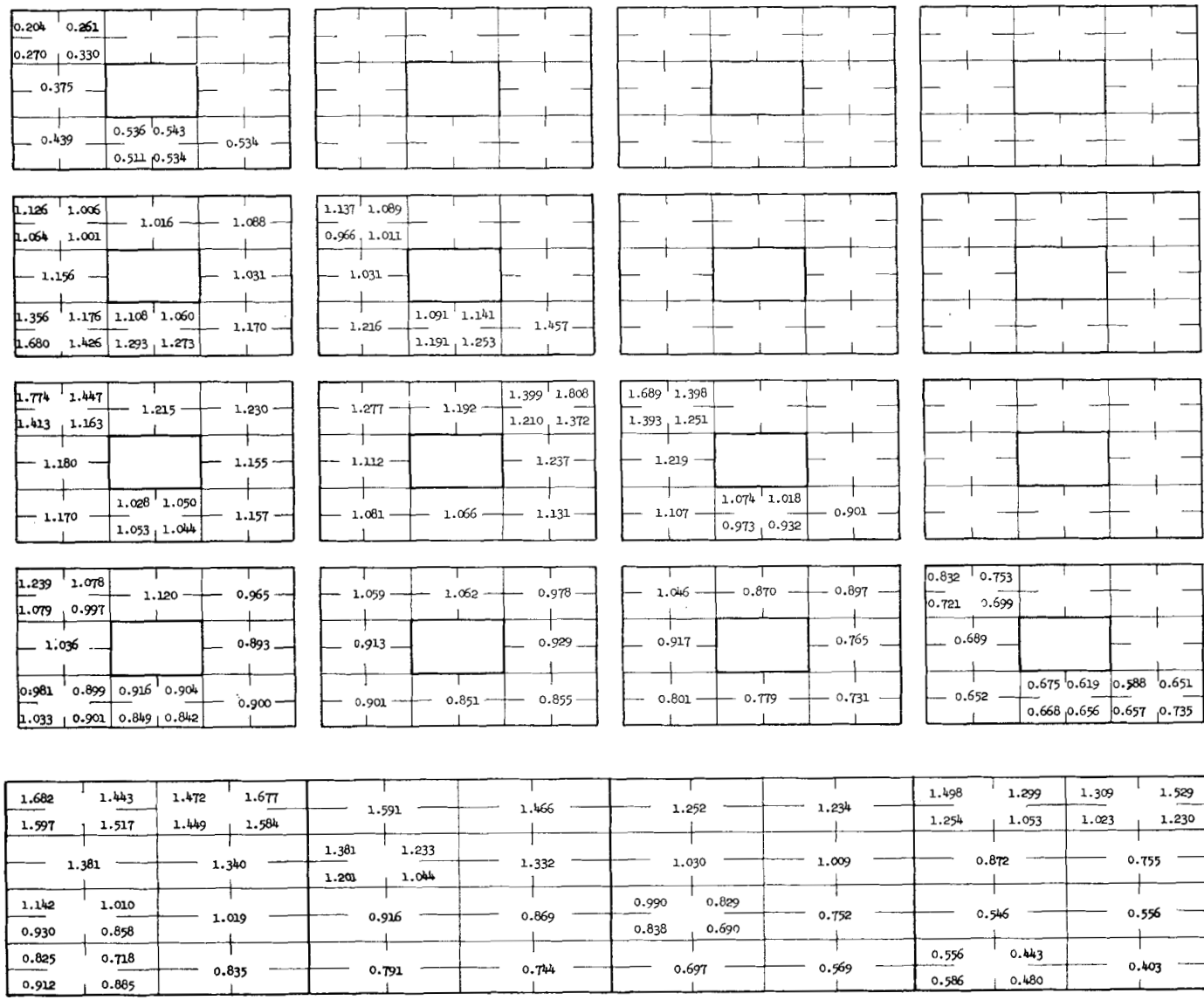

Fig. 309-6B Measured hot-plane power distribution in the hot-simulated BONUS critical assembly (center control rod in).

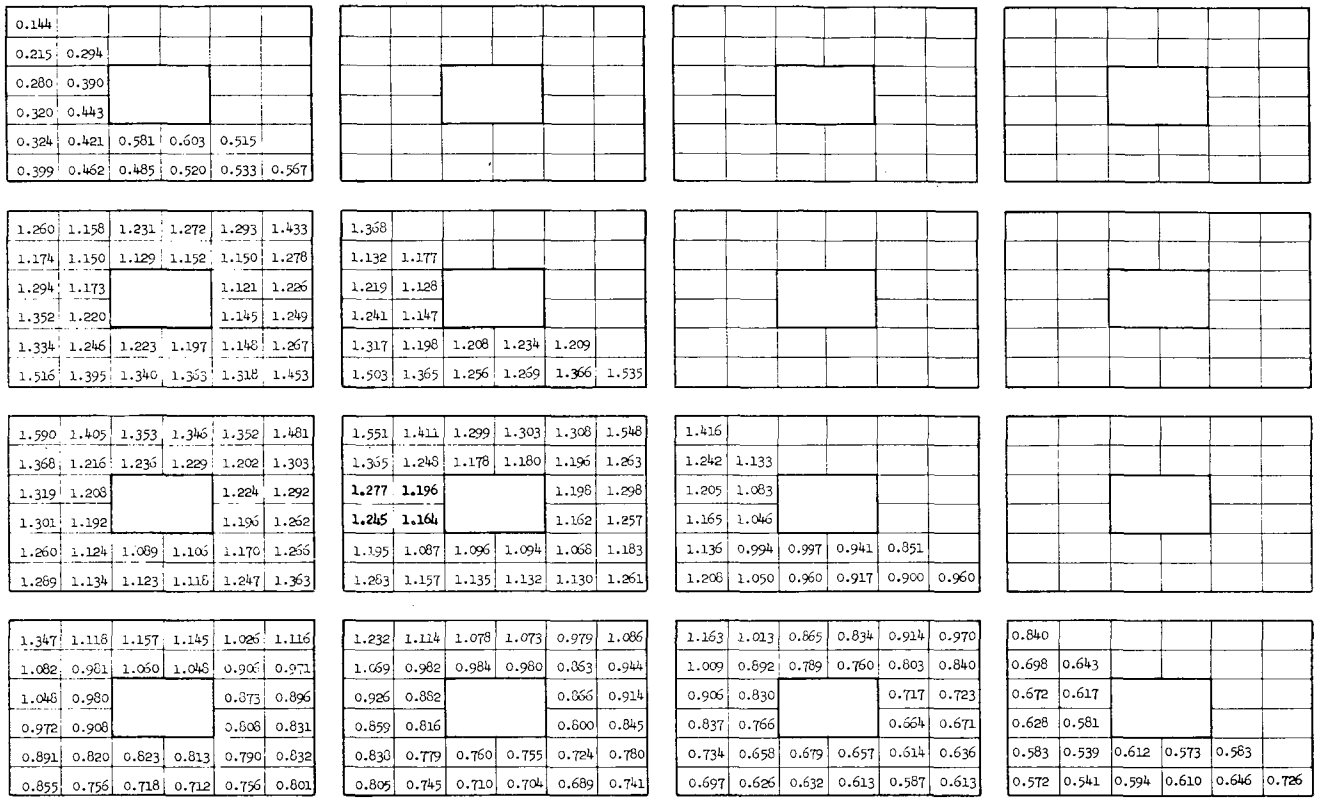

1.643	1.274	1.358	1.453	1.445	1.447	1.339	1.261	1.128	1.112	1.107	1.039	1.005	1.077	1.207	1.454
1.547	1.446	1.375	1.485	1.460	1.438	1.325	1.279	1.138	1.100	1.093	1.040	1.091	0.985	1.019	1.193
1.430	1.426	1.384	1.366	1.337	1.229	1.370	1.326	1.059	1.016	1.040	0.986	0.920	0.897	0.726	0.948
1.318	1.313	1.273	1.257	1.192	1.069	1.258	1.218	0.971	0.929	0.948	0.896	0.827	0.794	0.638	0.828
1.178	1.040	1.121	1.107	1.008	0.987	0.956	0.926	0.998	0.835	0.842	0.792	0.632	0.601	0.589	0.755
0.996	0.918	1.020	1.013	0.916	0.896	0.868	0.840	0.882	0.726	0.760	0.713	0.565	0.534	0.520	0.654
0.938	0.816	0.864	0.858	0.819	0.801	0.773	0.746	0.727	0.693	0.605	0.567	0.638	0.527	0.441	0.533
1.060	1.016	1.049	1.035	1.031	0.972	0.937	0.904	0.881	0.838	0.730	0.681	0.681	0.586	0.508	0.555

Fig. 309-7 Radial power distribution in hot plane of BONUS reactor (center control rod in).

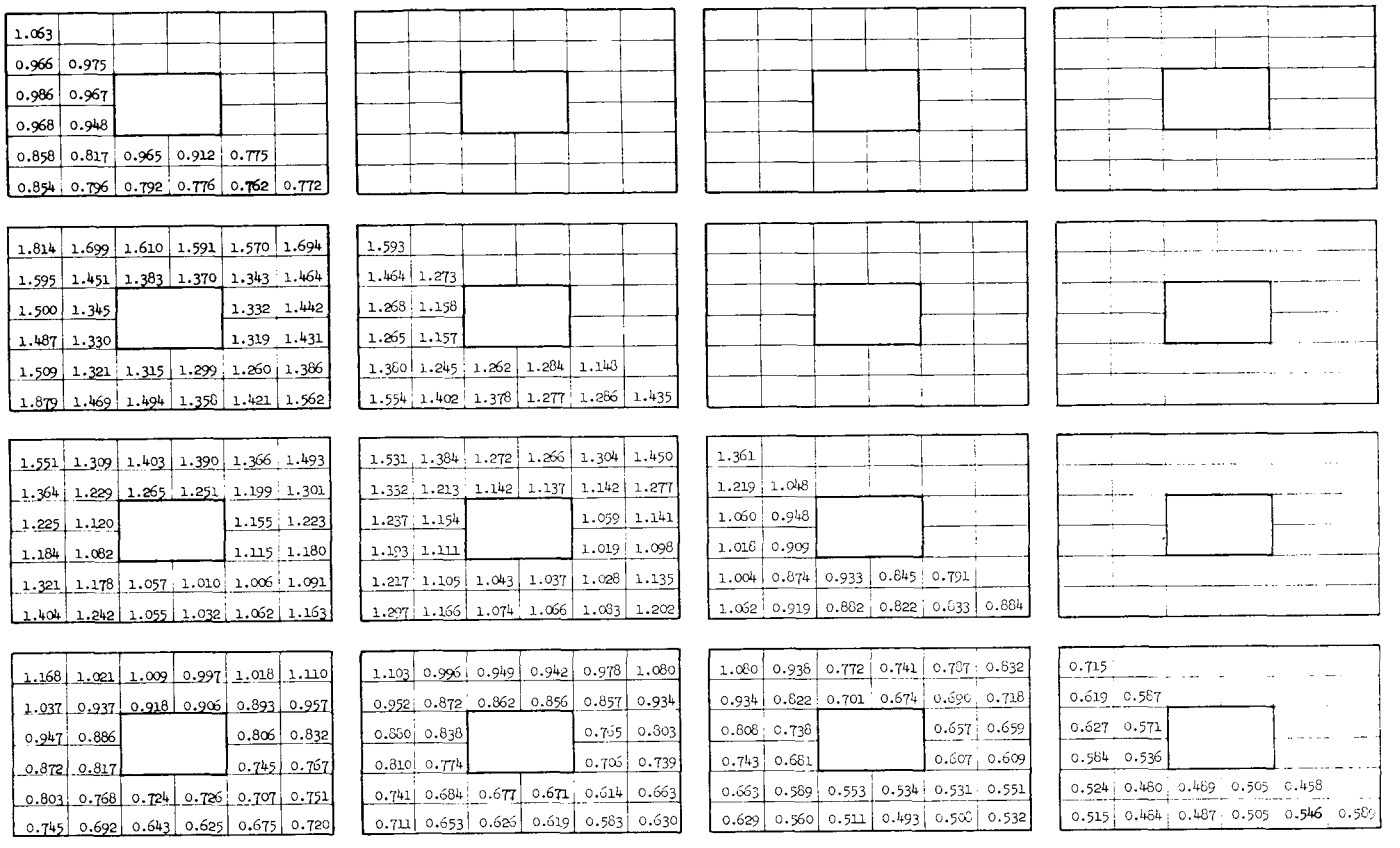

1.063					
0.966	0.975				
0.986	0.967				
0.968	0.948				
0.858	0.817	0.965	0.912	0.775	
0.854	0.796	0.792	0.776	0.762	0.772

1.814	1.699	1.610	1.591	1.570	1.694
1.595	1.451	1.383	1.370	1.343	1.464
1.500	1.345			1.332	1.442
1.487	1.330			1.319	1.431
1.509	1.321	1.315	1.299	1.260	1.386
1.879	1.469	1.494	1.358	1.421	1.562

1.593					
1.464	1.273				
1.268	1.158				
1.265	1.157				
1.380	1.245	1.262	1.284	1.148	
1.554	1.402	1.378	1.277	1.286	1.435

1.551	1.309	1.403	1.390	1.366	1.493
1.364	1.229	1.265	1.251	1.199	1.301
1.225	1.120			1.155	1.223
1.184	1.082			1.115	1.180
1.321	1.178	1.057	1.010	1.006	1.091
1.404	1.242	1.055	1.032	1.062	1.163

1.531	1.384	1.272	1.266	1.304	1.450
1.332	1.213	1.142	1.137	1.142	1.277
1.237	1.154			1.059	1.141
1.193	1.111			1.019	1.098
1.217	1.105	1.043	1.037	1.028	1.135
1.297	1.166	1.074	1.066	1.083	1.202

1.361					
1.219	1.048				
1.060	0.948				
1.016	0.909				
1.004	0.874	0.933	0.845	0.791	
1.062	0.919	0.882	0.822	0.833	0.884

1.168	1.021	1.009	0.997	1.018	1.110
1.037	0.937	0.918	0.906	0.893	0.957
0.947	0.886			0.806	0.832
0.872	0.817			0.745	0.767
0.803	0.768	0.724	0.726	0.707	0.751
0.745	0.692	0.643	0.625	0.675	0.720

1.103	0.996	0.949	0.942	0.978	1.080
0.952	0.872	0.862	0.856	0.857	0.934
0.860	0.838			0.765	0.803
0.810	0.774			0.706	0.739
0.741	0.684	0.677	0.671	0.614	0.663
0.711	0.653	0.626	0.619	0.583	0.630

1.080	0.938	0.772	0.741	0.707	0.832
0.934	0.822	0.701	0.674	0.690	0.718
0.808	0.738			0.657	0.659
0.743	0.681			0.607	0.609
0.663	0.589	0.553	0.534	0.531	0.551
0.629	0.560	0.511	0.493	0.500	0.532

0.715					
0.619	0.587				
0.627	0.571				
0.584	0.536				
0.524	0.480	0.489	0.505	0.458	
0.515	0.484	0.487	0.505	0.546	0.508

1.611	1.325	1.380	1.402	1.428	1.426	1.409	1.320	1.191	1.171	1.162	1.083	1.043	1.110	1.246	1.449
1.580	1.385	1.366	1.495	1.428	1.403	1.382	1.328	1.194	1.150	1.137	1.078	1.065	0.978	1.016	1.241
1.338	1.335	1.442	1.422	1.301	1.221	1.284	1.240	1.105	1.058	1.013	0.957	0.898	0.872	0.782	1.029
1.223	1.219	1.317	1.299	1.230	1.103	1.171	1.132	1.008	0.963	0.920	0.867	0.803	0.768	0.681	0.854
1.209	1.050	1.078	1.064	1.043	1.020	0.990	0.957	0.970	0.823	0.795	0.741	0.702	0.666	0.581	0.755
1.059	0.925	0.975	0.962	0.943	0.921	0.894	0.863	0.861	0.727	0.714	0.668	0.627	0.590	0.509	0.652
0.962	0.872	0.808	0.796	0.799	0.780	0.789	0.761	0.711	0.677	0.579	0.540	0.609	0.489	0.440	0.543
1.055	0.960	0.978	0.965	0.968	0.944	0.954	0.921	0.860	0.816	0.697	0.649	0.644	0.530	0.501	0.561

Fig. 309-8 Radial power distribution in hot plane of BONUS reactor (center control rod out).

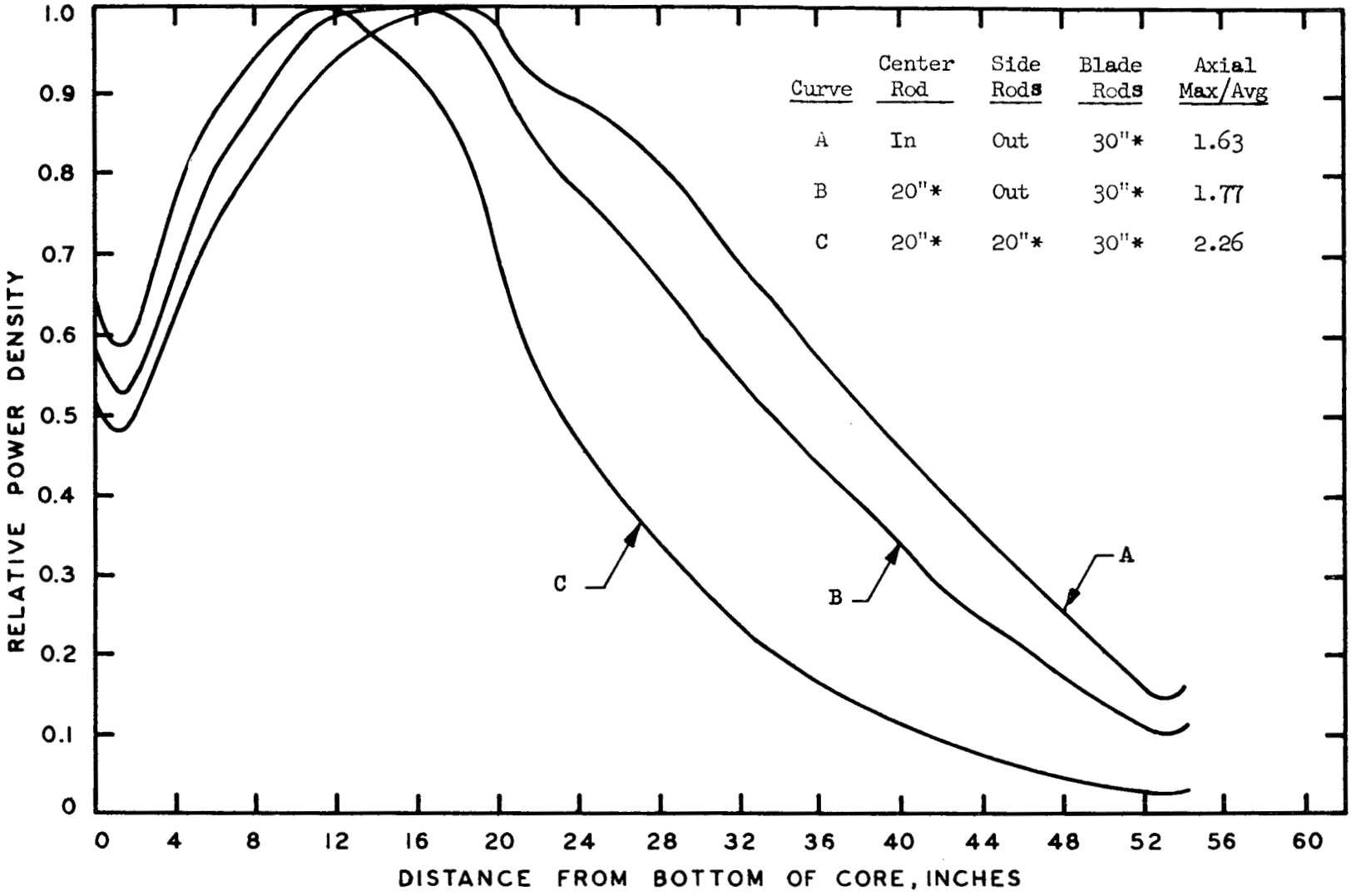

* Indicates distance from bottom of core.

Fig. 309-9 Axial power distribution in the enriched-fuel section of the BONUS boiler region for various control rod configurations.

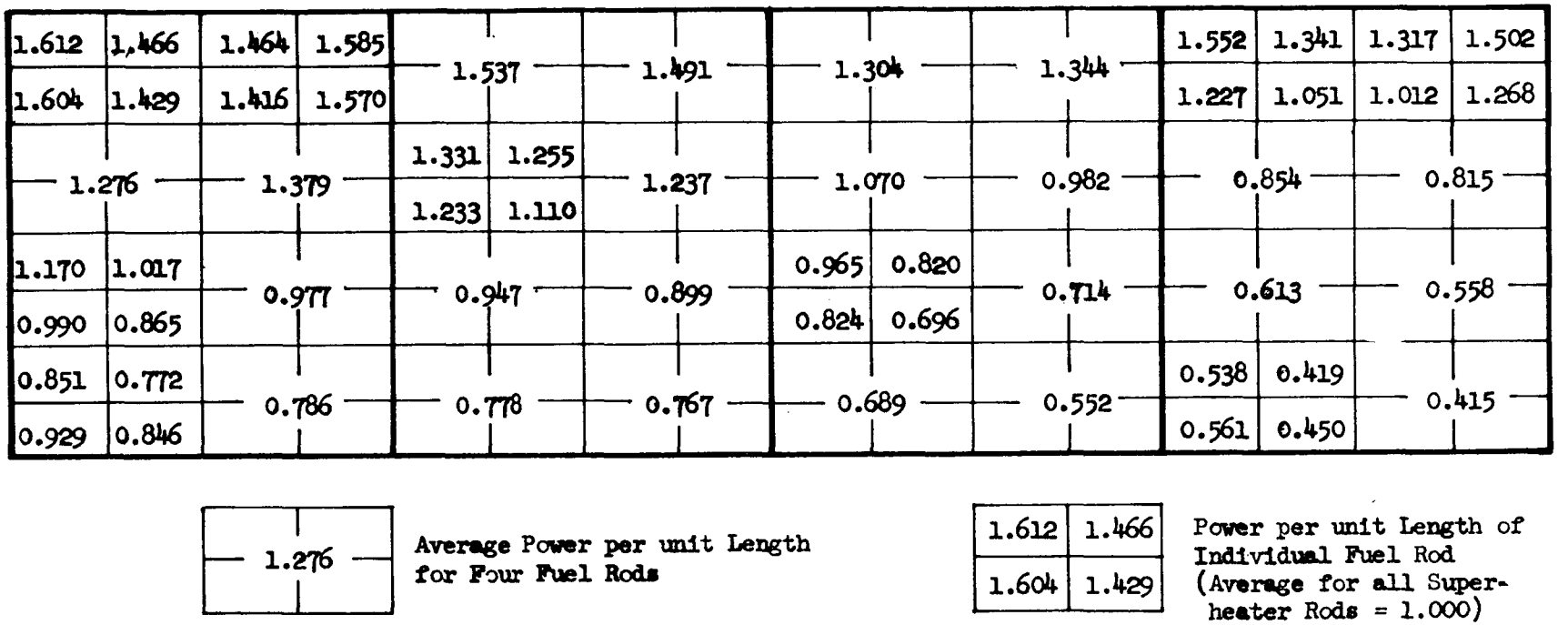

Fig. 309-10 Measured radial power distribution in hot plane of superheater region (side rods and blade rods at 25 inches; all other rods out).

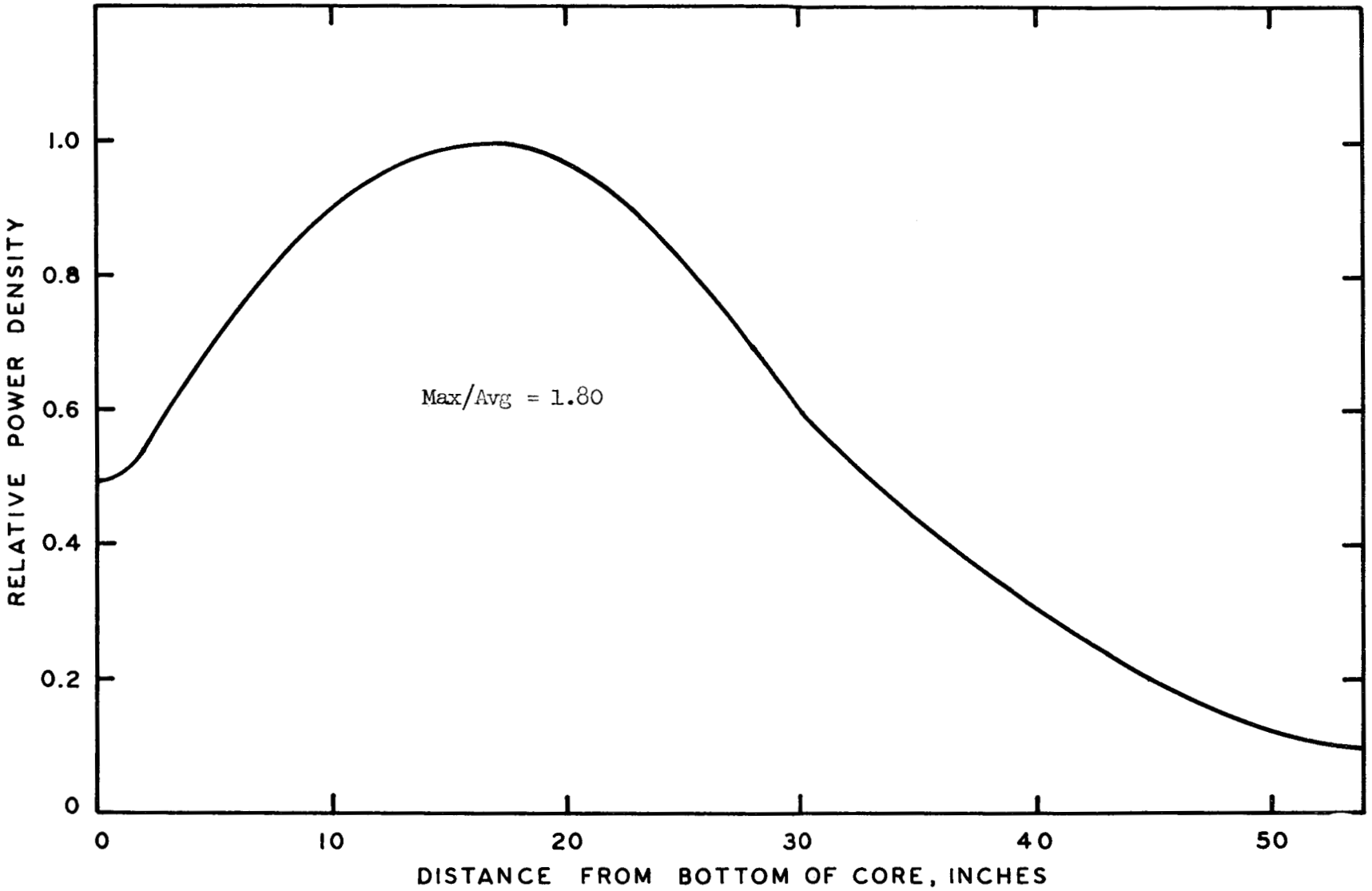

Fig. 309-11 Measured axial power distribution in superheater region (corrected for differerce in core height between critical mockup and BONUS; side rods and blade rods at 25 inches; all other rods out).

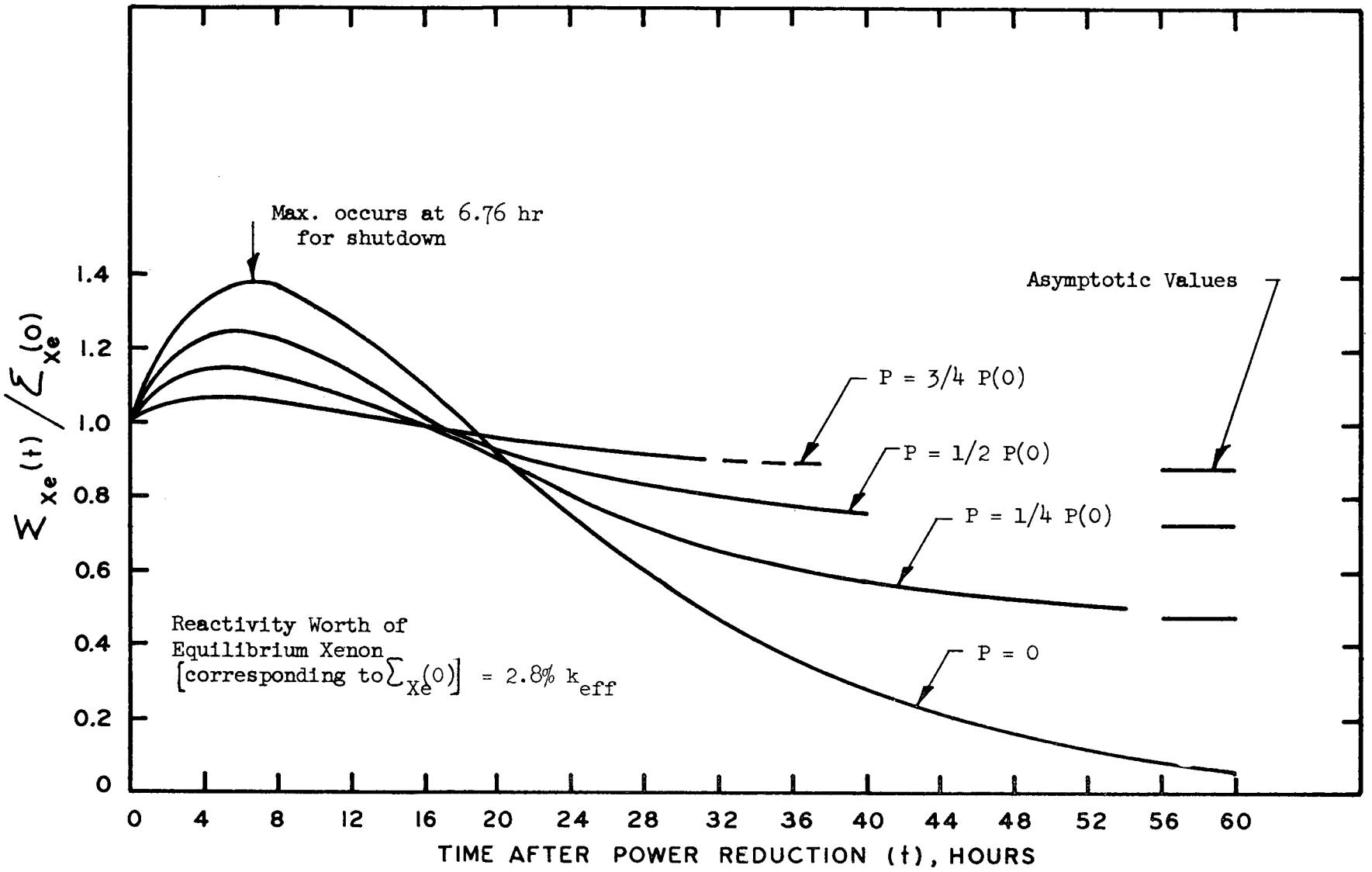

Fig. 309-12 Xenon transient after power reduction from full-power steady state.

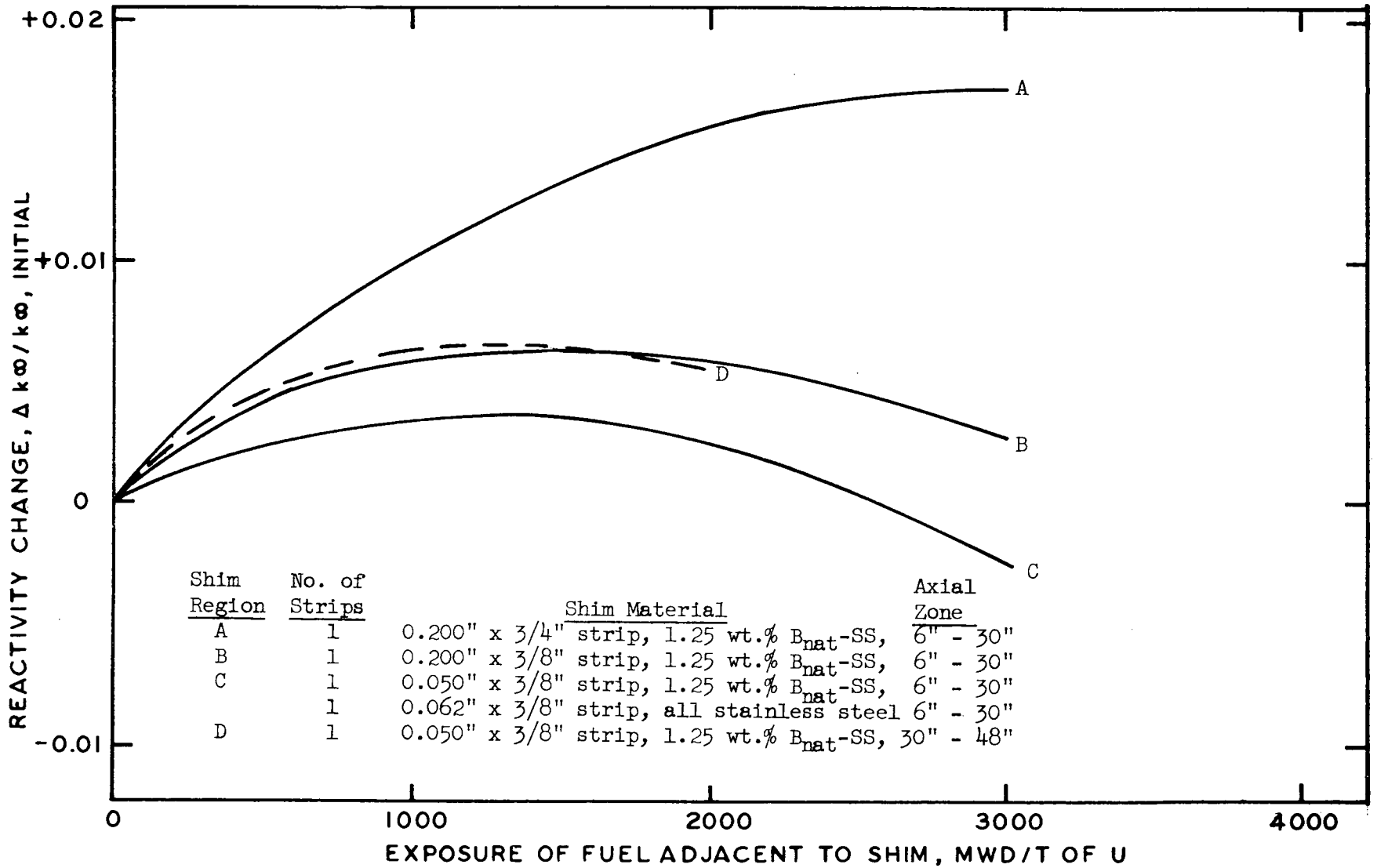

Shim Region	No. of Strips	Shim Material	Axial Zone
A	1	0.200" x 3/4" strip, 1.25 wt.% B_{nat}-SS,	6" - 30"
B	1	0.200" x 3/8" strip, 1.25 wt.% B_{nat}-SS,	6" - 30"
C	1	0.050" x 3/8" strip, 1.25 wt.% B_{nat}-SS,	6" - 30"
	1	0.062" x 3/8" strip, all stainless steel	6" - 30"
D	1	0.050" x 3/8" strip, 1.25 wt.% B_{nat}-SS,	30" - 48"

Fig. 309-13 Net reactivity change in local sections of BONUS boiler due to simultaneous burnup of shims and local fuel for the hot operating condition.

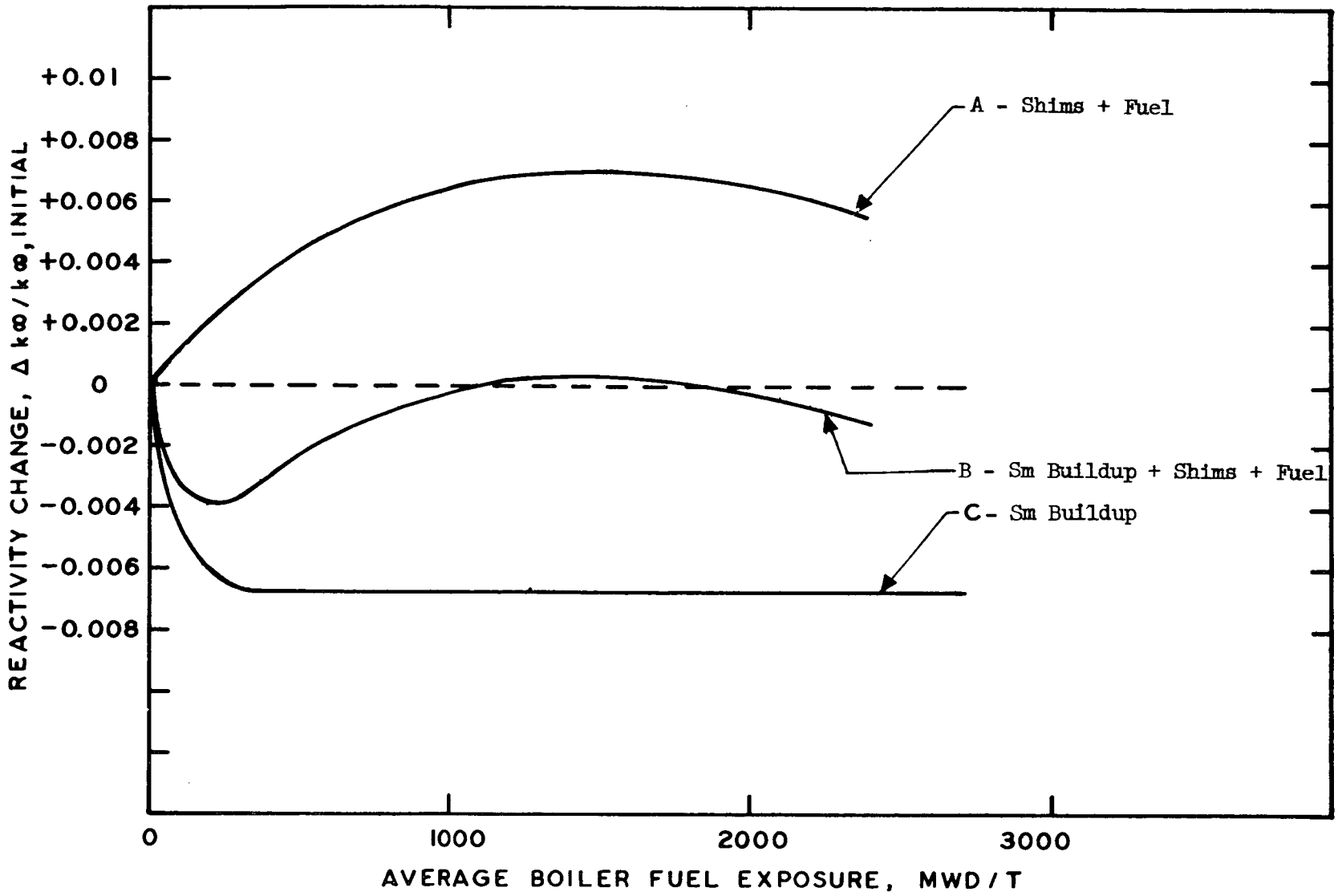

Fig. 309-14 Calculated reactivity variations versus average exposure of BONUS boiler fuel.

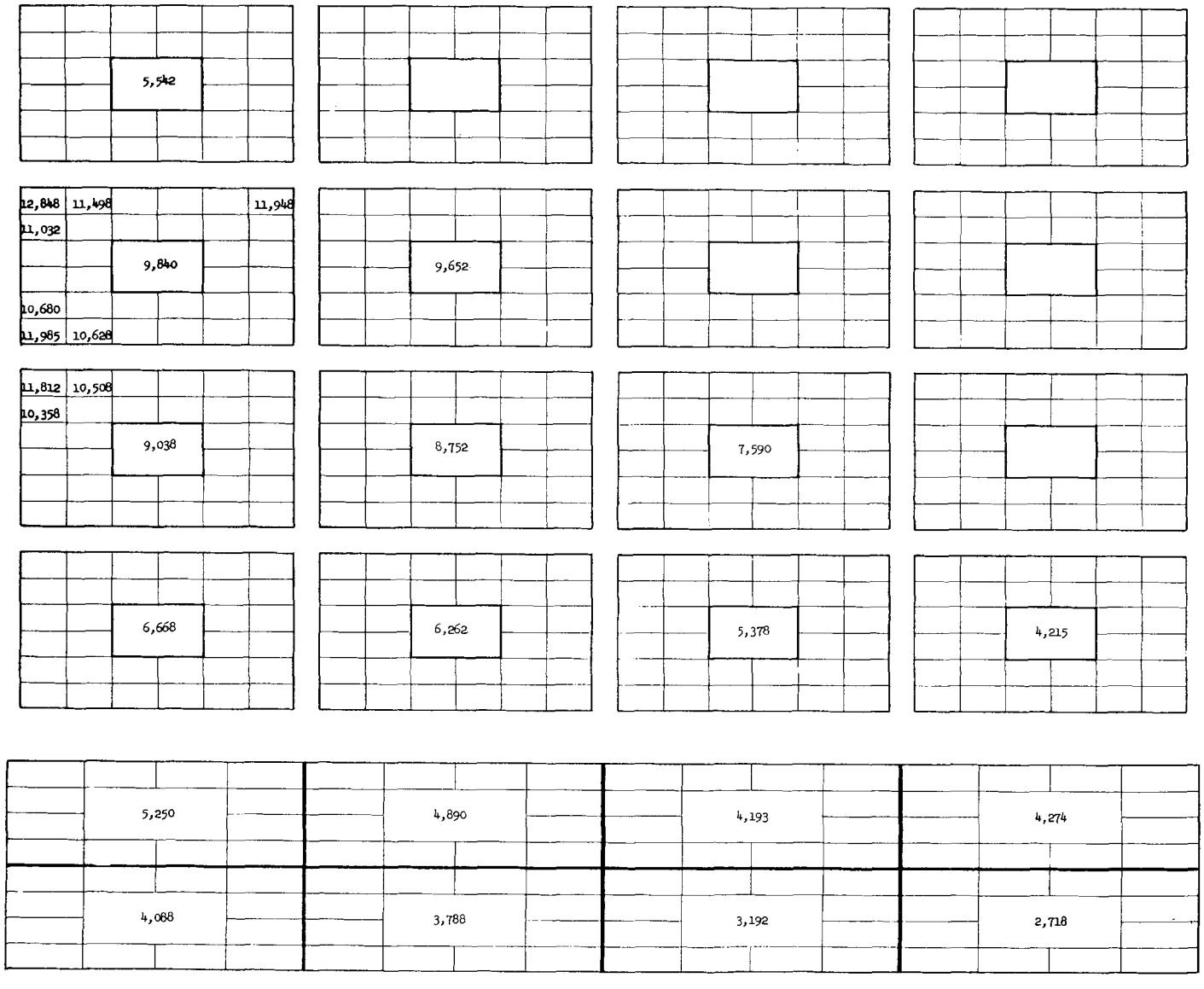

Fig. 309-15 Distribution of fuel burnup in the hot plane of the BONUS reactor after an average hot-plane burnup of 7,500 Mwd/ton U in the boiler region.

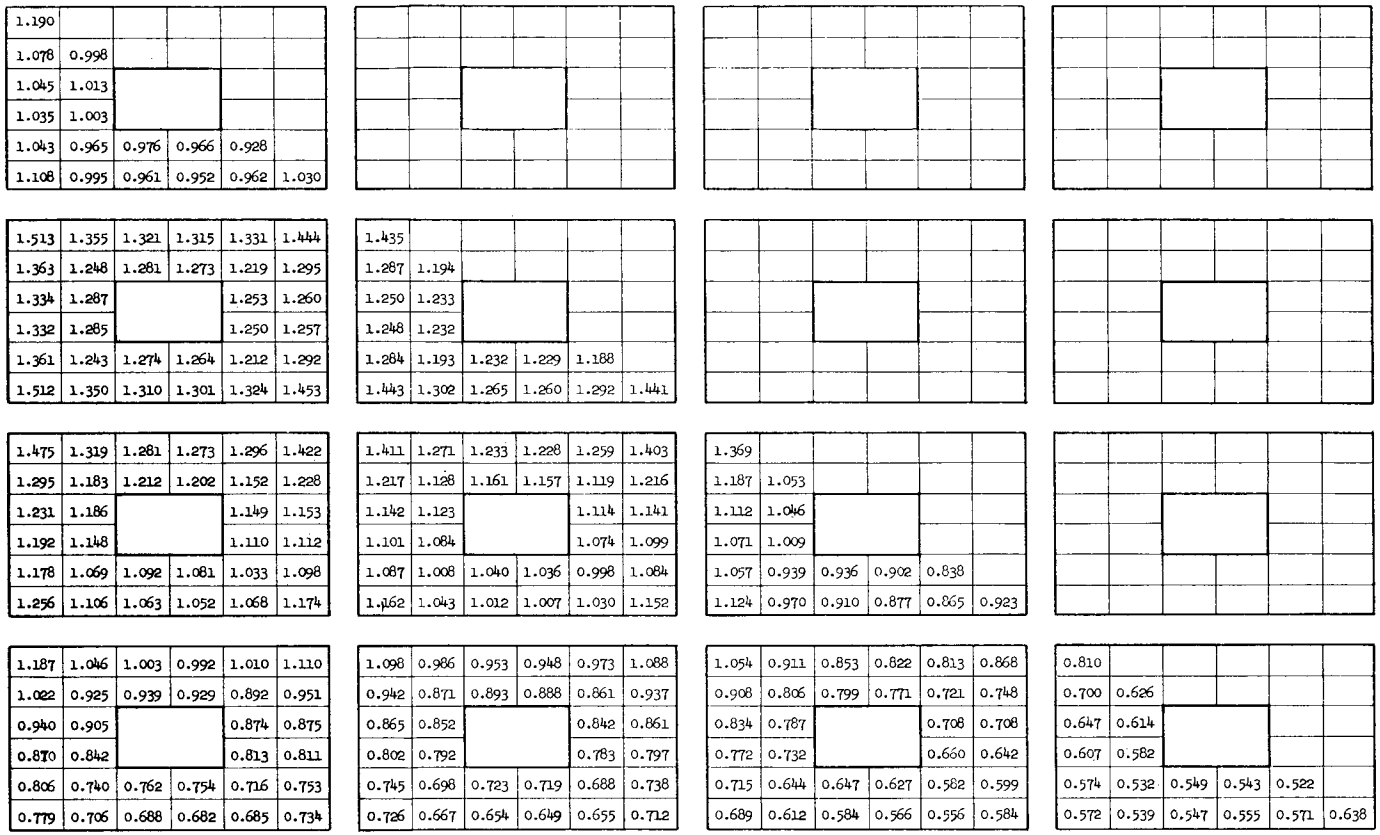

1.190					
1.078	0.998				
1.045	1.013				
1.035	1.003				
1.043	0.965	0.976	0.966	0.928	
1.108	0.995	0.961	0.952	0.962	1.030

1.513	1.355	1.321	1.315	1.331	1.444
1.363	1.248	1.281	1.273	1.219	1.295
1.334	1.287			1.253	1.260
1.332	1.285			1.250	1.257
1.361	1.243	1.274	1.264	1.212	1.292
1.512	1.350	1.310	1.301	1.324	1.453

1.435					
1.287	1.194				
1.250	1.233				
1.248	1.232				
1.284	1.193	1.232	1.229	1.188	
1.443	1.302	1.265	1.260	1.292	1.441

1.475	1.319	1.281	1.273	1.296	1.422
1.295	1.183	1.212	1.202	1.152	1.228
1.231	1.186			1.149	1.153
1.192	1.148			1.110	1.112
1.178	1.069	1.092	1.081	1.033	1.098
1.256	1.106	1.063	1.052	1.068	1.174

1.411	1.271	1.233	1.228	1.259	1.403
1.217	1.128	1.161	1.157	1.119	1.216
1.142	1.123			1.114	1.141
1.101	1.084			1.074	1.099
1.087	1.008	1.040	1.036	0.998	1.084
1.162	1.043	1.012	1.007	1.030	1.152

1.369					
1.187	1.053				
1.112	1.046				
1.071	1.009				
1.057	0.939	0.936	0.902	0.838	
1.124	0.970	0.910	0.877	0.865	0.923

1.187	1.046	1.003	0.992	1.010	1.110
1.022	0.925	0.939	0.929	0.892	0.951
0.940	0.905			0.874	0.875
0.870	0.842			0.813	0.811
0.806	0.740	0.762	0.754	0.716	0.753
0.779	0.706	0.688	0.682	0.685	0.734

1.098	0.986	0.953	0.948	0.973	1.088
0.942	0.871	0.893	0.888	0.861	0.937
0.865	0.852			0.842	0.861
0.802	0.792			0.783	0.797
0.745	0.698	0.723	0.719	0.688	0.738
0.726	0.667	0.654	0.649	0.655	0.712

1.054	0.911	0.853	0.822	0.813	0.868
0.908	0.806	0.799	0.771	0.721	0.748
0.834	0.787			0.708	0.708
0.772	0.732			0.660	0.642
0.715	0.644	0.647	0.627	0.582	0.599
0.689	0.612	0.584	0.566	0.556	0.584

0.810					
0.700	0.626				
0.647	0.614				
0.607	0.582				
0.574	0.532	0.549	0.543	0.522	
0.572	0.539	0.547	0.555	0.571	0.638

1.312	1.343	1.334	1.290	1.278	1.279	1.268	1.182	1.152	1.139	1.092	1.024	1.047	1.214	1.352	1.660
1.327	1.330	1.321	1.300	1.285	1.267	1.237	1.194	1.160	1.123	1.075	1.022	0.991	1.004	1.076	1.398
1.250	1.249	1.238	1.223	1.207	1.186	1.158	1.122	1.089	1.049	1.001	0.949	0.900	0.878	0.922	1.216
1.148	1.146	1.135	1.122	1.107	1.087	1.061	1.028	0.997	0.957	0.911	0.861	0.809	0.777	0.806	1.061
1.043	1.041	1.031	1.019	1.005	0.986	0.961	0.932	0.901	0.864	0.821	0.773	0.723	0.689	0.708	0.924
0.948	0.947	0.937	0.926	0.913	0.894	0.872	0.845	0.816	0.781	0.740	0.695	0.648	0.614	0.624	0.802
0.888	0.859	0.905	0.894	0.881	0.863	0.841	0.814	0.785	0.751	0.710	0.665	0.617	0.580	0.579	0.716
1.084	1.055	1.098	1.085	1.069	1.046	1.019	0.985	0.950	0.907	0.856	0.799	0.738	0.686	0.660	0.741

Fig. 309-16 Power distribution in the hot plane of the BONUS reactor immediately after removal of all boiler shims (center rod out; 7,500 Mwd/ton U average burnup in hot plane of boiler region).

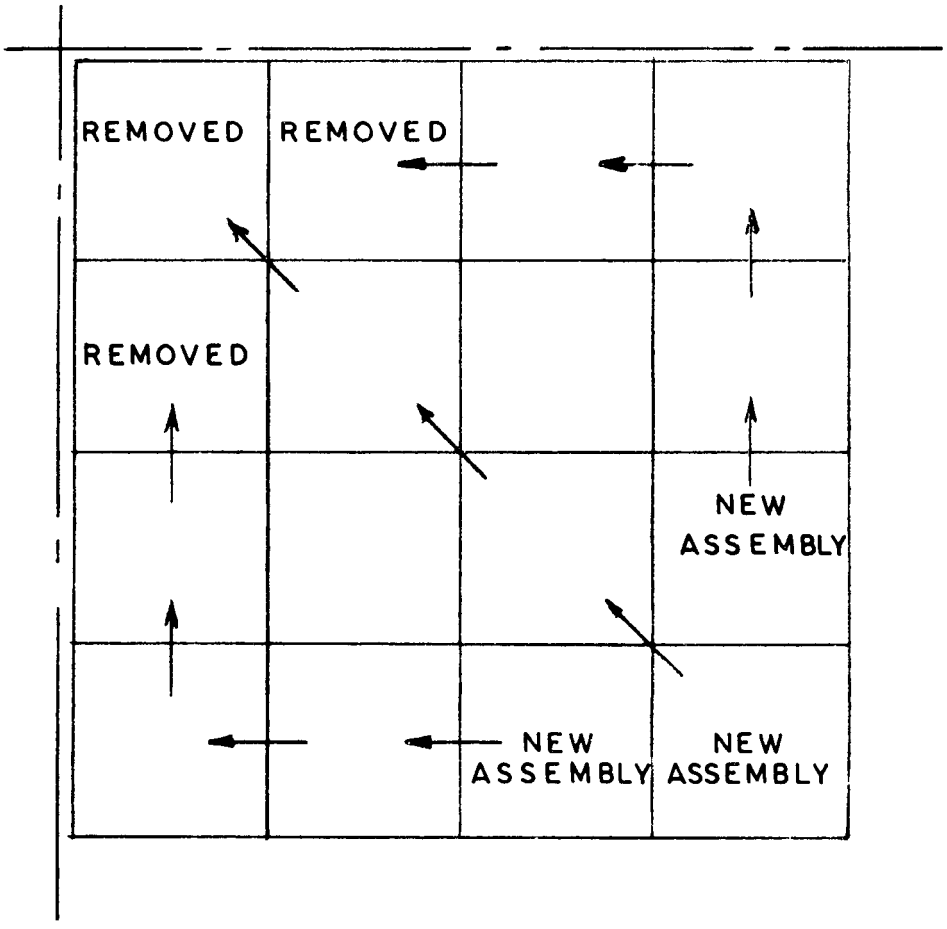

Fig. 309-17 Boiler region reloading pattern used for power distribution calculation.

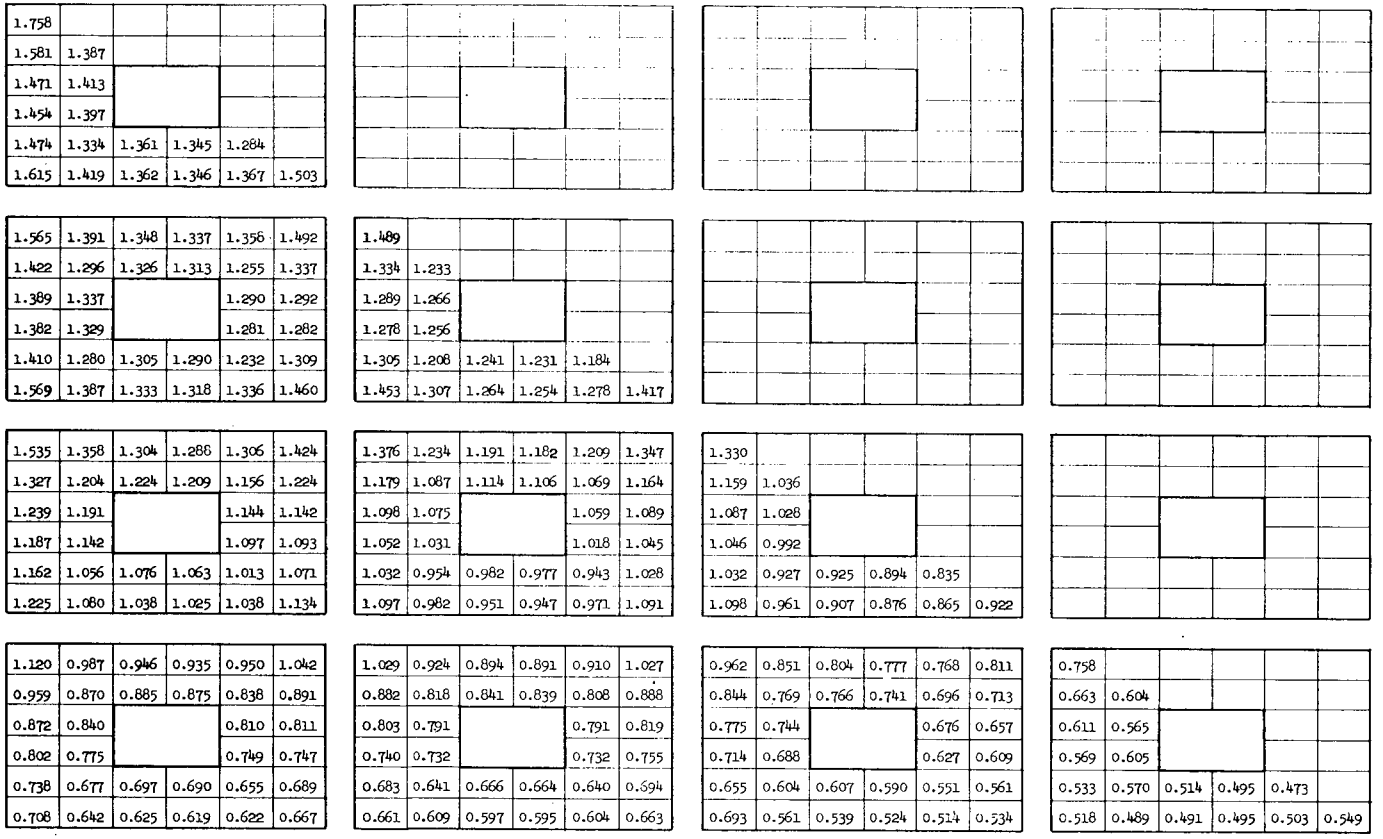

1.758					
1.581	1.387				
1.471	1.413				
1.454	1.397				
1.474	1.334	1.361	1.345	1.284	
1.615	1.419	1.362	1.346	1.367	1.503

1.565	1.391	1.348	1.337	1.356	1.492
1.422	1.296	1.326	1.313	1.255	1.337
1.389	1.337			1.290	1.292
1.382	1.329			1.281	1.282
1.410	1.280	1.305	1.290	1.232	1.309
1.569	1.387	1.333	1.318	1.336	1.460

1.489					
1.334	1.233				
1.289	1.266				
1.278	1.256				
1.305	1.208	1.241	1.231	1.184	
1.453	1.307	1.264	1.254	1.278	1.417

1.535	1.358	1.304	1.286	1.306	1.424
1.327	1.204	1.224	1.209	1.156	1.224
1.239	1.191			1.144	1.142
1.187	1.142			1.097	1.093
1.162	1.056	1.076	1.063	1.013	1.071
1.225	1.080	1.038	1.025	1.038	1.134

1.376	1.234	1.191	1.182	1.209	1.347
1.179	1.087	1.114	1.106	1.069	1.164
1.098	1.075			1.059	1.089
1.052	1.031			1.018	1.045
1.032	0.954	0.982	0.977	0.943	1.028
1.097	0.982	0.951	0.947	0.971	1.091

1.330					
1.159	1.036				
1.087	1.028				
1.046	0.992				
1.032	0.927	0.925	0.894	0.835	
1.098	0.961	0.907	0.876	0.865	0.922

1.120	0.987	0.946	0.935	0.950	1.042
0.959	0.870	0.885	0.875	0.838	0.891
0.872	0.840			0.810	0.811
0.802	0.775			0.749	0.747
0.738	0.677	0.697	0.690	0.655	0.689
0.708	0.642	0.625	0.619	0.622	0.667

1.029	0.924	0.894	0.891	0.910	1.027
0.882	0.818	0.841	0.839	0.808	0.888
0.803	0.791			0.791	0.819
0.740	0.732			0.732	0.755
0.683	0.641	0.666	0.664	0.640	0.694
0.661	0.609	0.597	0.595	0.604	0.663

0.962	0.851	0.804	0.777	0.768	0.811
0.844	0.769	0.766	0.741	0.696	0.713
0.775	0.744			0.676	0.657
0.714	0.688			0.627	0.609
0.655	0.604	0.607	0.590	0.551	0.561
0.693	0.561	0.539	0.524	0.514	0.534

0.758					
0.663	0.604				
0.611	0.565				
0.569	0.605				
0.533	0.570	0.514	0.495	0.473	
0.518	0.489	0.491	0.495	0.503	0.549

1.324	1.360	1.348	1.302	1.291	1.294	1.270	1.196	1.171	1.162	1.115	1.040	1.056	1.243	1.380	1.676
1.325	1.329	1.320	1.299	1.283	1.266	1.237	1.194	1.161	1.125	1.077	1.022	0.941	1.006	1.075	1.390
1.235	1.233	1.224	1.209	1.194	1.173	1.146	1.110	1.078	1.038	0.990	0.938	0.892	0.867	0.909	1.196
1.124	1.121	1.112	1.099	1.084	1.064	1.039	1.007	0.976	0.938	0.892	0.842	0.794	0.760	0.788	1.035
1.012	1.009	1.001	0.989	0.975	0.956	0.933	0.904	0.875	0.839	0.797	0.749	0.703	0.668	0.686	0.895
0.913	0.910	0.902	0.891	0.879	0.861	0.840	0.813	0.786	0.752	0.713	0.669	0.625	0.590	0.600	0.772
0.875	0.872	0.865	0.854	0.842	0.825	0.804	0.778	0.750	0.717	0.679	0.635	0.591	0.554	0.553	0.686
1.057	1.053	1.044	1.031	1.015	0.994	0.968	0.936	0.903	0.861	0.814	0.759	0.704	0.652	0.628	0.706

Fig. 309-18 Radial power distribution in the hot plane of the BONUS reactor after reloading the boiler region as indicated in Fig. 309-17 (center control rod out).

400. REACTOR AUXILIARY SYSTEMS

400.1. GENERAL

The reactor auxiliary systems include the systems directly connected to the reactor pressure vessel plus other plant systems primarily associated with nuclear operations. Individual system descriptions are included in sections 401 through 415.

Figures 400.1-1 and 400.1-2 explain the symbols used on the flow diagrams and the electrical schematics included in sections 401 through 415.

A summary of the various classes of piping employed in the plant is shown in Fig. 400.1-3. Table 400.1-1 lists the class of piping used for the various plant piping circuits and the design temperature and pressure for each. All piping for the plant has been designed in accordance with the Pressure Piping Code ASA B 31.1-1955, including nuclear code case interpretations where they were considered applicable. In general nuclear piping code rules were followed for all steam piping which becomes a part of the primary containment barrier during an emergency shutdown, and for all water piping which would be filled with contaminated water in case fission products are released to the water in the reactor vessel. Consumable insert rings were used in circuits where it was considered desirable to eliminate crevices that might trap radioactive contamination.

The connections between the primary reactor system and the various auxiliary systems are shown schematically in Fig. 400.1-4.

The insulation on the stainless steel piping systems is designed to avoid stress corrosion problems. The material used for insulating the austenitic stainless steel piping and equipment is Owens Corning Fiberglass Corporation "Kaylo," calcium silicate, which contains approximately 14 ppm of soluble chlorides. Although Fiberglass insulation has a lower chloride content (8 ppm), it was not used because in the 450°F to 500°F temperature range breakdown of the binders can result. Prior to installing the insulation on piping and equipment, after removing surface contaminants by wire brushing, water washing, and drying, all piping and fittings 2 inches in size and larger, and equipment surfaces are wrapped with a .006-inch aluminum foil which acts as a sacrificial anode to protect the stainless steel. Piping systems 2-1/2 inches and larger have the insulation protected by a .016-inch thick outer aluminum jacket.

The thickness of the insulation on the various size carbon steel, low alloy steel and stainless steel piping systems and equipment are given in Tables 400.1-2 and 400.1-3. Piping and equipment paint colors for the various reactor auxiliary systems is given in Table 914-1.

Table 400.1-1 CLASSIFICATION OF PIPING SYSTEMS

System	Service	Design Conditions Press., psi	Design Conditions Temp. F	Class see Fig. 400.1-3	Consumable insert rings for 2 in. and larger
1	Main Steam				
	a. Small superheater subheader and lines to this header	1100	1050	1500CRVH	Yes
	b. Other superheater lines to main header	1100	950	1500CRH	Yes
	c. From header to turbine stop valve	950	950	1500CR	Yes
	d. Turbine by-pass	950	950	1500CR	Yes
2	Emergency Condenser				
	a. Main steam to emergency condenser	1100	950	1500CR	Yes
	b. Emergency condenser to reactor circulating pump suction	1100	562	900SS	Yes
3	Poison Injection to Reactor	1150	562	900SS	Yes
4	Reactor Feedwater				
	a. Feedwater pump thru stop valve	1350	375	900	Yes
	b. Stop valve outlet to reactor	1375	562	900SS	Yes
	c. Reactor water column	1150	562	900SS	No
5	Reactor Auxiliaries				
	a. Reactor circulating water	1150	562	900SS	Yes
	b. Reactor purification	1150	562	900SS	Yes
	c. Shutdown cooling	1150	462	900SS	Yes
	d. Preheating	1150	562	900SS	Yes

Table 400.1-1 (Continued)

System	Service	Design Conditions Press., psi	Design Conditions Temp. F	Class see Fig. 400.1-3	Consumable insert rings for 2 in. and larger
6	Emergency Core Spray				
	a. Control valve to reactor	1150	562	900SS	Yes
	b. Supply to control valve	-	-	125	No
7	Saturated Steam				
	a. To poison injection tank	1150	562	900SS	Yes
	b. Poison injection to reactor circulating pump suction	1150	562	900SS	Yes
	c. Other	1150	562	900	Yes
8	Shield Cooling	100	120	125	No
9	Fuel Pool Purification and Cooling	-	120	Brass	No
10	Liquid Waste Disposal	100	120	125	No
11	Gas Disposal	100	120	125	No
12	Treated Water				
	a. Acid, concentrated	100	120	Acid	No
	b. Caustic	100	120	150	No
	c. Demineralized water	100	120	Demin. Water	No
	d. Demineralizer regeneration	-	-	Demin. Waste	No
13	Condensate				
	a. Condenser to condensate pump	-	-	150	Yes
	b. Condensate pump to feedwater pump	250	350	300	Yes
14	Extraction Steam				
	a. Turbine to No. 1 heater	50	250	150	Yes
	b. Turbine to No. 2 heater	50	300	150	Yes
	c. Turbine to No. 3 heater	75	450	150	Yes
	d. Turbine to No. 4 heater	175	600	300	Yes

Table 400.1-1 (Continued)

System	Service	Design Conditions Press., psi	Design Conditions Temp. F	Class see Fig. 400.1-3	Consumable insert rings for 2 in. and larger
15	Heater Drain				
	a. Heater 4 to heater 3	175	600	300	Yes
	b. Heater 3 to heater 2	75	450	150	Yes
	c. Heater 2 to heater 1	50	300	150	Yes
	d. Heater 1 to drain cooler and condenser	50	250	150	Yes
16	Pipe Line Drains				
	a. Main steam and turbine bypass before traps	1100	950	1500CR	No
	b. Saturated steam before traps	1150	562	900	No
	c. Main steam and turbine bypass after traps	200	890	300	No
	d. Saturated steam after traps	200	388	300	No
	e. Extraction lines No. 1, 2 and 3	75	450	150	No
	f. Extraction line No. 4	175	600	300	No
17	Seal Water	-	-	600	No
18	Control Air	110	120	125	No
19	Cooling Water	100	120	Cooling Water	No
20	Vents (Including Safety & Relief Valves)				
	a. Superheated steam	-	-	300	No
	b. All others				
21	Sampling	-	-	900SS	NO

Table 400.1-2 CLASSIFICATION OF PLANT THERMAL INSULATION

System Classification		Insulation* thickness total-in. Pipe size - in. 1/2 to 1-1/2	2 to 3	4	5 & 6	8 and up
Class I	701°F through 950°F	2	3	3-1/2	4	4-1/2
Class II	501°F through 700°F	1-1/2	2	2-1/2	3	3-1/2
Class III	301°F through 500°F	1	1-1/2	1-1/2	2	2
Class IV	300°F and lower	1	1	1	1	1-1/2
Class V	Equipment	See Table 400.1-3				

* Insulation type - Owens Corning Fiberglas Corporation "Kaylo" hydrous calcium silicate.

Note: Class I and II systems insulation made up in two layers, Class III and IV single layer. Above 500°F Class V equipment insulation is installed in two layers.

Table 400.1-3 PIPING SYSTEMS IN THE RESPECTIVE THERMAL INSULATION CLASSES

Insulation Class I

1. All main steam from reactor superheated steam nozzles to turbine stop valve.
2. Main steam to turbine gland seal steam regulator.
3. Main steam to air ejector steam control station.
4. Main steam to emergency condenser.
5. Main steam drips from traps.
6. Main steam turbine bypass to condenser.

Insulation Class II

1. Saturated steam to main steam line supplying gland seal regulator.
2. Saturated steam from reactor saturated steam nozzle to safety valves and back-pressure relief valve. In shielded pipe chase the total thickness of insulation is 2-1/2 inches.
3. Reactor circulating water loop between reactor and reactor circulating water pump.
4. Reactor circulating water from circulating loop through regenerative cooler including bypass, through reactor purification pumps, through secondary cooler including bypass, and direct return to circulating loop which bypasses Reactor Purification System.
5. Outlet of reactor water preheater to reactor circulating water loop.
6. Return to reactor water preheater from item (4) above.
7. From shell side of regenerative cooler to item (4) above.
8. Saturated steam to poison injection tank and return to reactor circulating water pumps suction.
9. Saturated steam line drains before traps.
10. Emergency condenser gravity return to reactor circulating pumps suction.
11. Reactor head vent piping and emergency core spray piping from the reactor head nozzles to the control rod drive trench.
12. Reactor water column and piping above elevation 37 ft, 4 in.

Insulation Class III

1. Feedwater from outlet of heater No. 4 to reactor including bypass valve for heater 4 and piping from bypass valve.
2. Poison injection from outlet of poison injection tank to reactor circulating water at reactor.
3. Drains from heater 4 to heater 3 and condenser.
4. Reactor feedwater to main steam attemperator.

Insulation Class IV

1. Condensate from outlet of heater 1 drain cooler through heaters 1, 2 and 3 and the boiler feed pumps to inlet of heater 4 including bypass piping of heater 4 up to bypass valve.
2. Drains from heater 3 to heater 2 and condenser, from heater 2 to heater 1, and from heater 1 to drain cooler.
3. Vents from heaters, 1, 2, 3 and 4 to condenser.
4. Recirculation lines from reactor feedwater pumps to condenser desuperheater manifold at condenser.
5. Condenser desuperheater manifold.

The following items of piping are covered for personnel protection only:

1. Vents from safety valves and back pressure relief valve on reactor saturated steam outlet header.
2. Vents from relief valves and manual vent valves on emergency condenser tube bundle and poison injection tank.
3. Vents from safety and relief valves on feedwater heaters steam sides.
4. Emergency condenser exhaust to fuel storage pool.
5. Vent from relief valve on reactor water preheater to main condenser.
6. Sampling lines from main steam, saturated steam, reactor circulating water and poison injection tank.
7. Main steam and saturated steam after traps.

Insulation Class V - Equipment

Covering is to be applied in single layer unless otherwise noted. Except as stated below insulation clips are not furnished with equipment. Thicknesses shall be as follows:

Item	Operating Temp. F	Thickness		
		Insulation	Finish	
			Insulating	Hard
Reactor Circ. Water Pumps	540	3-1/2	-	-
Reactor Purif. Pumps	540	3	1/4	1/4
Regenerative Cooler	540	3	1/4	1/4
Reactor Feedwater Pumps	290	1-1/2	-	-
Heater 4	360	1-1/2	1/4	1/4
Heater 3	290	1	1/4	1/4
Heater 2	240	1	1/4	1/4
Heater 1	180	1	-	1/4
Drain Cooler	140	1	-	1/4
Reactor Water Preheater	540	3	1/4	1/4
Poison Injection Tank	540	3	1/4	1/4

LEGEND

- Bellows Operated 3 Way Valve
- Gate Valve
- Globe Valve
- Check Valve
- Level Control Valve Mechanically Operated
- Needle Valve
- Reverse Current Valve Hydraulic Actuator
- Bleeder Steam Air Operated Check Valve
- Normally Closed Valve
- Gear Operated Valve (Manual)
- Solenoid [S] Motor [MO] Operated Valve
- 3-Way Valve
- Angle Valve
- Safety Or Relief Valves
- Flow Control Valve Manual Operated
- Butterfly Valve
- Air to open (Diaphragm Valve)
- Air to close (Diaphragm Valve)
- Diaphragm Operated Control Valve
- DES — Desuperheater
- Turbine Stop Valve (Main Stop Valve)
- EM — Furnished by Equipment Manufacturer
- Pressure Regulating Valve Self Powered (Internal Conn.)
- Pressure Regulating Valve Self Powered (External Conn.)
- FCV-1 — Valve Major Identification No. For Control Valves-Use Instrument Identification Table. eg. FCV Flow Control Valve, LCV Level Control Valve etc., MOV: Motor Operated Valve, SV: Solenoid Valve. Other Valves shall be identified by number only as per Valve list.

- Hand Operated Air Test Valve
- Pneumatic Lines
- Process Lines
- Capillary Tubing
- Electric Leads
- Hydraulic Lines
- PI 1 — Local Mounted Instrument. PI-1 Typical Instrument Mark Number see Instrument Identification Table.
- Local Instrument Mounted Outside Shield Compartments.
- Panel Mounted Instrument Located on Control Room Panel unless otherwise noted as follows:- LTP On Local Turbine Panel; DP-1 On Demineralizing Panel No.1; DP-2 On Demineralizing Panel No.2
- Transmitter
- Orifice
- Breakdown Orifice
- In-The-Line Type Measuring Device
- Hose Connection
- Flow Nozzle
- Funnel
- T — Trap
- Closed Sight Flow
- Sample Cooler
- Pipe Cap
- Turbine Governor Valve
- A.E.C. OWNERSHIP
- PRIMRA OWNERSHIP
- Pipe Line "Y" Strainer
- Gage Glass
- Reducer
- Gentile Tube

INSTRUMENT IDENTIFICATION

LETTER	AS FIRST LETTER IN GROUP	AS SECOND LETTER IN GROUP	AS THIRD LETTER IN GROUP
A	———	Alarm	Alarm
C	Conductivity	Control	Control
D	Density	———	———
D/p	Differential Pressure		
E	———	Element-Sensing	———
F	Flow	———	———
G	———	Glass-No Measurement	———
H	Hand Actuated	———	———
H_2	Hydrogen	———	———
I	———	Indicating	———
L	Level	———	———
M	Moisture	Monitor	———
MO	Motor Operated	———	———
O_2	Oxygen	———	———
P	Pressure	———	———
R	———	Recording	———
S	Speed	Switch Station	Scram
T	Temperature	Totalizing	Totalizing
V	Viscosity	Valve	Valve
W	Weight	Well	———
Z	Position	———	———
γ	Gamma Radiation		

NOTE:
Subscript designations beside Instrument Symbols mean the following:
O: Open, C: Closed, Hi: High, Lo: Low
N.F.C: Not Fully Closed
N.F.O: Not Fully Open
I.S.D: Instrument Standard Details

Ref. Dwg. JM 40-M-7 Rev. 2

Fig. 400.1-1 Legend — Mechanical.

LEGEND

- 3 Phase Squirrel Cage Motor
- Device or Instrument SV: Solenoid Operated Valve A: Ammeter, V: Voltmeter
- Relay Coil, Auxiliary Relay No. 12
- Indicating Light with Resistor G: Green, W: White, R: Red, A: Amber. Number in parenthesis represents Panel Identification Number
- Air Circuit Breaker with Overcurrent Trip: 20 AT - 20 Amp Trip
- Toggle or Knife Switch
- Selector Switch
- Push Button, Normally Closed with Momentary Contacts
- Push Button, Normally Open with Momentary Contacts
- Push Button, Double Contacts, Normally Open with Momentary Contacts
- Push Button, Open & Closed with Maintained Contacts
- Relay or Device Contact, Normally Open
- Relay or Device Contact, Normally Closed
- Normally Open Contact whose Operating Coil is on Dwg 40-E-7
- Relay, Coil X2 whose Contact No. 2 is on Dwg 40-E-8. All other relay Contacts on same sheet as their Coils
- Position Relay No. 1, Contact No. 2
- Annunciator Drop R: Red Window, W: White Window
- Rectifier or Diode
- Disconnecting Device
- Thermal Cutout
- Transformer Winding
- Resistor
- Variable Resistor
- Potentiometer Type Position Indicator
- Instrument Shunt
- Fuse
- Crossing of Connected Conductors
- Crossing of Conductors not Connected
- Pressure Switch No. 10, Contact No. 1 Typical for L3, T5, etc.
- Thermocouple
- Coaxial Cable
- Capacitor
- Blowout Coil
- [MOV-4] Motor Operated Valve Designation
- [41] Motor Identification Number

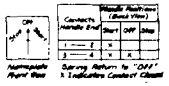

CONTROL SWITCH CONTACT REQUIREMENTS
(Does not conform to any particular Switch Manufacturer)

LOCATION SYMBOLS

- A: AC-DC Switchgear
- B: Local Turbine Panel
- C: Control Rod Relay Cabinet
- D: On Door
- E: Excitation Switchgear
- F: Synchronizing Panel
- G: Generator
- H: Hydrogen Panel
- J: Containment Building
- K: Condenser
- L: Load Center No. 1, (2L, 3L- Load Centers No. 2 & 3)
- LT: Lube Oil Tank
- M: At or Near Motor
- N: Generator Neutral Equipment
- P: Control Panel
- Q: AC Valve Load Center
- QF: 115V AC Control Power Distribution Panel
- R: At or Near Reactor
- RB: Pill Box
- S: 480V Indoor Switchgear
- T: At or Near Turbine
- TK: On Tank
- U: On Valve Unit
- V: DC Valve Load Center
- VP: 125V DC Control Power Distribution Panel
- W: Screen Well House
- X: On Pipe
- Y: Yard
- Z: 38KV Switchyard
- RSS: Reactor Aux. Systems Instrument Rack
- RFC: Reactor Feedwater Instrument Rack
- RIR: Reactor Instrument Rack
- SIR: Superheater Instrument Rack
- AP: Alarm Panel
- CT: Cooling Tower
- SO: 480V Outdoor Switchgear
- MU: Make-up Water Treatment System Control Panel
- PC: Condensate Purification System Control Panel

LEGEND (Cont'd)

- Ground Connection
- Position Switch No. 25, Contact No. 1 Typical throughout except for Control Rod Position Switches
- No. 9 Control Rod Position Switch No. 3, Contact No. 1 (See Control Rod Table for other Rod drives; Dwg. 40-E-8)
- Contact on Solid State Relay and Associated Shorting Switch. Shorting Switch closes when Relay is withdrawn from mounting
- 1Ø, 60 cy Motor Reversing
- Synchro Position Indicator
- Horn
- Bell
- Indicating Light W: White R: Red G: Green
- 30A NFC: Safety Switch; F: Fused 30A, High Interrupting Capacity fuses
- Motor Starter; Manually Operated
- Combination Fused Safety Switch & Magnetic Starter

DEVICE FUNCTIONAL NUMBERS

- 01 Master Control Element
- 02 Time Delay Starting or Closing Relay
- 4 Master Contactor or Relay
- 6 Starting Circuit Breaker
- 12 Overspeed Device
- 21F Field Failure Relay
- 23 Temperature Control Device
- 25 Synchronizing Switch
- 27 AC Undervoltage Relay
- 30 Annunciator Relay
- 33 Position Relay
- 38 Bearing Protective Device
- 41 Field Circuit Breaker
- 43 Manual Transfer or Selector Device
- 43R Voltage Regulator Trans. for Switch
- 45 DC Overvoltage Relay
- 49 Thermal Relay
- 51 AC Time Overcurrent Relay
- 52 AC Air Circuit Breaker, Contactor or Relay
- 62 Time Delay Stopping or Opening Relay
- 63 Pressure, Flow or Level Relay
- 64 Ground Protective Relay
- 65 Governor
- 70 Rheostat, Electrically Operated
- 72 DC Circuit Breaker or Contactor
- 74 Alarm Relay
- 76 DC Overcurrent Relay
- 80 DC Undervoltage Relay
- 86 Lockout Relay
- 87 Differential Relay
- 94,96 Scram Relay

DEVICE DESIGNATIONS

- A: Ammeter
- BP: By-Pass Switch Shown with Breaker in Operating Position
- C: Closing Coil
- CS: Control Switch
- DPS: Differential Pressure Switch
- FS: Flow Switch
- G: Galvanometer
- GD: Ground Detector
- HI: High
- KO: Key Operated
- L: Lower Coil
- LA: Level Alarm
- LM: Latch Magnet
- LO: Low
- LS: Level or Float Switch
- LVDT: Linear Voltage Differential Transformer
- MO: Motor Operated
- MTS: Emergency Hand & Solenoid Trip
- O: Opening Coil
- OS: Speed Switch
- PB: Push Button
- PS: Pressure Switch
- R: Raise Coil
- S: Solenoid
- SR: Synchro Receiver
- SS: Selector or Synchronizing Switch
- ST: Synchro Transmitter
- SV: Solenoid Valve
- T: Trip Coil
- TC: Time Closing
- TI: Temperature Indicator
- TO: Time Opening
- TR: Clock Timer Switch
- TS: Temperature Switch
- V: Voltmeter
- VA: Volt-Amp Meter
- VAR: Varmeter
- VBS: Vibration Switch
- W: Wattmeter
- WH: Watthour Meter
- ZI: Position Indicator
- ZS: Position Switch

MISCELLANEOUS FUNCTIONAL DESIGNATIONS

- (D/PAS-4): Differential Pressure Alarm Scram No. 4
- (FAS-2): Flow Alarm Scram No. 2
- (LAS-3): Level Alarm Scram No. 3
- (PAS-1): Pressure Alarm Scram No. 1
- (TAS-11): Temperature Alarm Scram No. 11
- (ZAS-5): Position Alarm Scram No. 5

LEGEND (Cont'd)

- Transformer
- Combination Fused Safety Switch and Magnetic Contactor
- (5) Motor, 5 Horsepower
- Selector Switch Hand-Off-Automatic
- Indicating Lights; G: Green, A: Amber
- Interlock Device
- Temperature Switch
- Push Button Station, Start-Stop

Ref. Dwg. J&M 40-E-5 Rev. 5

Fig. 400.1-2 Legend - Electrical.

CLASS	PIPE SIZES	PIPE RATING SCHEDULE AND TYPE	PIPE MATERIAL	PIPE ASTM SPEC.	FITTINGS SIZES	FITTINGS RATING SCHEDULE AND TYPE	FITTINGS MATERIAL	FITTINGS ASTM SPEC.
1500 CR	All	Sch. 80 Seamless	Chrome-Moly	A-335 P-11 1¼% Cr. ½% Mo.	1½" & Smaller 2" & Larger	4000 lbs S.W. Use 5 Dia. Pipe Bend-Seamless Sch. 80 Use Cast Ts, Ls, Ys Etc.	1¼% Cr. ½% Moly 1¼% Cr ½% Moly	A-182 F-11 A-335 P-11 A-217 WC6
900 SS	6" & Smaller 8" & Larger	Sch. 80 Seamless Sch. 100 Welded	Stainless Steel ** ditto	A-376 TP-304 A-358 TP-304	1½" & Smaller 2" to 6" Incl. 8" & Larger	3000 lbs SW Sch. 80 B.W. Use 5 Dia Pipe Bends or Cast Fittings as noted on dwgs.	Forged Stainless Steel ** ditto Cast Stainless Steel	A-403 WP-304 A-351 CF8 see Note F
900	All	Sch. 80 Seamless	Carbon Steel	A-106 Gr. B	1½" & Smaller 2" & Larger	3000 lbs. S.W. Sch 80 B.W. Seamless	Forged Steel Steel	A-105 Gr. II A-234 WPB
600	All	Sch. 80 Seamless	Carbon Steel	A-106 Gr. B	2" & Smaller 2½" & Larger	3000 lbs. S.W. Sch. 80 B.W. Seamless	Forged Steel Steel	A-105 Gr. II A-234 WPB
300 ***	2" & Smaller 2½" & Larger	Sch. 80 Seamless Sch. 40 Seamless	Carbon Steel ditto	A-53 Gr. B ditto	1½" & Smaller 2" 2½" & Larger	3000 lbs S.W. Sch 80 BW Seamless Sch. 40 B.W. Seamless	Forged Steel Steel	A-105 Gr. II A-234 WPB ditto
150 ***	2" & Smaller 2½" thru 10" 12" & Larger	Sch. 80 Seamless Sch 40 Std. Wt. Seamless	Carbon Steel ditto ditto	A-53 Gr. B ditto ditto	1½" & Smaller 2" 2½" & Larger	3000 lbs. S.W. Sch 80 BW Std. Wt. B.W. Seamless	Forged Steel Steel Steel	A-105 Gr. II ditto A-234 WPB
125	2" & Smaller 2½" thru 10" 12" & Larger	Sch. 80 Seamless Sch 40 Std Wt	Carbon Steel ditto ditto	A-53 Gr. B ditto ditto	2" & Smaller 2½" & Larger	300 lbs. Scr'd. Std. Wt. B.W. Seamless	Malleable Iron Steel	 A-234 WPA
ACID	2" & Smaller 2½" & Larger	Sch. 80 Seamless Sch. 40 Seamless	Carbon Steel ditto	A-106 Gr. B ditto	2" & Smaller 2½" & Larger	3000 lbs. S.W. Sch. 40 B.W. Seamless	Forged Steel Steel	A-105 Gr II A-234 WPA
DEMINERALIZED WATER	All	Sch. 40 Seamless	Aluminum Type 6063-T6	B-241	All	Sch. 40 B.W.	Forged Aluminum 6061-T6	None
DEMINERALIZED WASTE	All	300 psi max. at 200 F Scr'd. Ends	Saran Lined Steel Pipe		1" to 2" Incl. 2½" to 6" Incl.	150 psi max at 200 F	Spec. Saran Lined M.I. Union Fitting with Scrd. Ends. Spec. Saran Lined C.I. Flanged Fittings	
1500 CRVH 1500 CRH	CRVH CR–	Sch 160 Seamless Sch 80 Seamless	Chrome-Moly ditto	A-335 P 22 2¼% Cr 1% Moly ditto	All	Use 5 Dia. Pipe Bends-Seamless Use Cast Tees, Laterals, Ys Etc. CRVH- Sch 160 CRH- Sch. 80 ASA 16.9-58	2¼% Cr. 1% Moly 2¼% Cr. 1% Moly	A-335 P-22 A-217 WC 9
BRASS	All	Regular Weight Seamless	Red Brass	B-43	All	150 lbs Walseal *	Bronze	B-61
CAST IRON	All	150 lbs. Mechanical Joint	Cast Iron	A.S.A. A21-8	All	150 lbs Mechanical Joint	Cast Iron	A.S.A. A21-11
COOLING WATER	2" & Smaller 2½" & Larger	Sch. 80 Seamless Std. Wt. Seamless	Carbon Steel Galv. Carbon Steel	A-53 Gr. B ditto	2" & Smaller 2½" & Larger	300 lbs. Scr'd. Std. Wt. B.W. Seamless	Malleable Iron-Galv. Steel	 A-234 WPA

CLASS	FLANGES SIZES	FLANGES RATING SCHEDULE AND TYPE	FLANGES MATERIAL	FLANGES ASTM SPEC.	GASKETS RATING SCHEDULE	GASKETS TYPE	GASKETS MATERIAL
1500 CR	Do Not Use				Do Not Use		
900 SS	Do Not Use				Do Not Use		
900	Do Not Use				Do Not Use		
600	2" & Smaller 2½" & Larger	600 lbs R.F. S.W. See Note A 600 lbs. R.F.W.N.	Forged Steel Forged Steel	A-105 Gr. II A-105 Gr. II	600 lbs.	Flexitalic or Equal	Type 304 S.S. Style CG
300 ***	1½" & Smaller 2" & Larger	300 lbs R.F. S.W. See Note A 300 lbs. R.F. W.N.	Forged Steel ditto	A-181 Gr. I ditto	300 lbs.	Ring	1/16" Compr. Asbestos
150 ***	1½" & Smaller 2" & Larger	150 lbs. R.F. S.W. See Note A 150 lbs. R.F. W.N.	Forged Steel ditto	A-181 Gr. I ditto	150 lbs.	Ring	1/16" Compr. Asbestos
125	2" & Smaller 2½" & Larger	150 lbs. F.F. Scrd 150 lbs. F.F. W.N.	Forged Steel ditto	A-181 Gr. I ditto	150 lbs.	Ring	Red Rubber
ACID	All	150 lbs. F.F. S.W. See Note A	Forged Steel	A-181 Gr. I	150 lbs.	Full Face	1/8" African Blue Cape Long Fibre Asbestos
DEMINERALIZED WATER	All	150 lbs	Forged Aluminum 6061-T6	None	50 lbs.	Full Face	Saran Rubber
DEMINERALIZED WASTE	2½" to 6" Incl.	125 lbs.	Spec. F.F. C.I. Flanges For Saran Lined Pipe		Spec. Saran Spacers and Gaskets		
1500 CRVH 1500 CRH	Do Not Use				Do Not Use		
BRASS	All	150 lbs. Walseal *	Bronze	B-61	150 lbs.	Ring	1/16" Compressed Asbestos
CAST IRON	All	Flange Cast integrally with Pipe			All	Spec. Rubber For Mechanical Joint Red Rubber, Full Face for F.F. Flanges	
COOLING WATER	2" & Smaller 2½" & Larger	150 lbs. F.F. S.W. See Note B 150 lbs. F.F. W.N.	Forged Steel ditto	A-181 Gr. I ditto	150 lbs	Ring	Red Rubber Full Face

CLASS	BOLTING TYPE	BOLTING MATERIAL	BOLTING ASTM SPEC.	VALVES GENERAL SIZE	VALVES GENERAL MATERIAL	VALVES GENERAL TRIM
1500 CR	Do Not Use			1½" & Smaller 2" & Larger	Forged Alloy Steel A-182 F11 Cast Alloy Steel A-217 WC6	Stellite or Malcomized ditto
900 SS	Do Not Use			2" & Smaller 2½" & Larger	Forged Stainless Stl. A-182 F304 Cast Stainless Stl. A-351 Gr. CF8 see Note F	Stainless Steel ditto
900	Do Not Use			2" & Smaller 2½" & Larger	Forged Steel A-105-Gr. II Cast Steel A-216-WCB	Stainless Steel ditto
600	Studs Cont. Thrd. Nuts (2) Hex-Semi Finished	Cr. Mo.	A-193 Class B-7 A-194 Gr. 2H	2" & Smaller 2½" & Larger	Forged Steel A-105-Gr. II Cast Steel A-216-WCB	Stainless Steel ditto
300 ***	Studs Cont. Thrd. Nuts (2) Hex-Semi Finished	Chrome-Moly Carbon Steel Heavy	A-193 Class B7 A-194 Gr. 2H	1½" & Smaller 2" & Larger	Forged Steel A-105-Gr. II Cast Steel A-216-WCB	Stainless Steel ditto
150 ***	Studs Cont. Thrd. Nuts (2) Hex-Semi Finished	Chrome-Moly Carbon Steel Heavy	A-193 Class B7 A-194 Gr. 2H	1½" & Smaller 2" & Larger	Forged Steel A-105-Gr. II Cast Steel A-216-WCB	Stainless Steel ditto
125	Bolts Sq. Hd. Semi-Finished Nut Hex-Semi Finished	Carbon Steel Reg. Series Carbon Steel Heavy Series	A-261 Gr. B0 A-194 Gr. I	2" & Smaller 2½" & Larger	Bronze Cast Iron	Hard Metal Renewable Seats Full Bronze
ACID	Studs Cont. Thrd Nuts (2) Hex-Semi Finished	Carbon Steel Reg. Series Carbon Steel Heavy Series	A-261 Gr. B0 A-194 Gr. I	All	Aloyco 20*	Aloyco 20*
DEMINERALIZED WATER	Bolts Sq. Hd. Not Washer Faced Nuts Hex Unfin. Top Chamfer	Aluminum 2024-T4 ditto	None None	All	Alum Alloy 18-8-Mo	Diaph Swing Check
DEMINERALIZED WASTE	Bolts Sq. Hd. Semi Finished Nuts Hex-Semi Finished	Carbon Steel Reg. Series Carbon Steel Heavy Series	A-216 Gr. B0 A-194 Gr. I			
1500 CRVH 1500 CRH	Do Not Use			2" & Smaller 2½" & Larger	Forged Alloy Steel A-182 F-22 Cast Alloy Steel A-217 WC9	Stellite Stellite or Malcomized
BRASS	Bolts Sq. Hd. Semi-Fin. Nut Hex Semi-Fin.	Carbon Steel Reg. Series Carbon Steel Heavy Series	A-261 Gr. B0 A-194 Gr. I	3" & Below	Walseal * Bronze B-61	Hard Metal
CAST IRON	Make same as Brass					
COOLING WATER	Bolts Sq Hd Semi-Fin. Nut Hex-Semi-Finished	Carbon Steel Reg. Series Carbon Steel Heavy Series	A-261 Gr. B0 A-194 Gr. I	2" & Smaller 2½" & Larger	Bronze Cast Iron	Hard Metal Renewable Seats Full Bronze

CLASS	GATE VALVE RATING SCHEDULE & TYPE ENDS	GATE VALVE BONNET	GLOBE VALVES RATING SCHEDULE & TYPE ENDS	GLOBE VALVES BONNET
1500 CR	Use Globe Valve By Company see Spec. 40-25B		1500 lbs. S.W. Edward 2224* By Company see Spec. 40-25C	Welded
900 SS	By Company see Spec. 40-25F		By Company see Spec. 40-25F	
900	900 lb. Chapman List 960* ½" to 1½" - S.W. 2" & larger - B.W. 900 lbs. B.W. Chapman List 900*	Flanged O.S. & Y Flanged or Press Seal O.S. & Y	900 lbs. 944Y* & Edward 948Y* ½" to 1½" - S.W. 2" & larger - B.W. 900 lbs. B.W. Edwards 4016Y*	Flanged, Welded or Union Flanged or Press Seal O.S. & Y.
600	600 lb. Crane 3605XU* ½" to 1½" - S.W. 2" & larger - B.W. 600 lbs. B.W. Chapman List 600*	Flanged O.S. & Y. Flanged O.S. & Y.	600 lbs. S.W. Edward 448Y* & 444Y* 600 lb. B.W. Crane 171½ XR*	Flanged or Union Flanged O.S. & Y.
300 ***	600 lb. Crane 3605XU* ½" to 1½" - S.W 2" & larger - B.W 300 lbs. B.W. Chapman List 300*	Flanged O.S. & Y. Flanged O.S. & Y.	600 lbs. S.W. Edward 448Y* & 444Y* 300 lbs. B.W. Crane 151½ XR*	Flanged or Union Flanged O.S. & Y.
150 ***	600 lb. Crane 3605XU* ½" to 1½" - S.W. 2" & larger - B.W. 150 lbs. B.W. Chapman List 150*	Flanged O.S. & Y. Flanged O.S. & Y.	600 lbs. S.W. Edward 448Y* & 444Y* 150 lbs. B.W Crane 143½ XR	Flanged or Union Flanged O.S. & Y.
125	150 lb Scrd. Crane 431 UB* 125 lbs. Flgd. Chapman List 25*	Union R.S. Flanged O.S. & Y.	150 lbs. Scrd Crane 14½ P* 125 lbs. Flgd. Crane 351*	Union R.S. Flanged O.S. & Y.
ACID	150 lbs. Flanged Aloyco 111-AS*	Flanged O.S. & Y with Acid Shield	150 lbs. Flanged Aloyco 311-AS*	Flgd. O.S. & Y. with Acid Shield
DEMINERALIZED WATER	150 lb Flanged Crane 1621*	Y Pattern Diaphram	150 lb. Flanged Crane 1621*	Y Pattern Diaphram
DEMINERALIZED WASTE				
1500 CRVH 1500 CRH	Use Globe Valve None		1500 lbs. S.W. Edwards 2224* By Company see Spec 40-25C	Welded
BRASS	200 lbs. Walseal * No. 29WS *	Union R.S.	200 lbs Walseal * No 245PWS	Union R.S.
CAST IRON				
COOLING WATER	150 lb. Scrd. Crane 431 UB* 125 lbs. Flgd. Chapman List 25*	 Flanged O.S. & Y.	150 lbs. Scrd. Crane 14½ P* 125 lbs. Flgd. Crane 351*	Union R.S. Flanged O.S. & Y.

CLASS	CHECK VALVES RATING SCHEDULE & TYPE ENDS	CHECK VALVES TYPE DISK	NOTES
1500 CR	1500 lbs. S.W. Edwards 2278* By Company see Spec. 40-25C	Piston	
900 SS	By Company see Spec. 40-25F		Cobalt content of stainless steel limited to 0.2 percent Cast Fittings and Valve Castings to have radiography and dye penetrant check
900	1500 lbs Edwards 2278* ½" to 1½" - S.W. 2" & larger B.W. 900 lbs B.W. Chapman List 923*	Piston Tilting	2½" Valves may be 1500 lb Cast Steel
600	600 lbs. S.W. Edwards 2678Y* & 4638Y* 600 lbs B.W. Chapman List 623*	Piston Tilting	
300 ***	600 lbs. S.W. Edwards 2678Y* & 4638Y* 300 lbs. B.W. Chapman List 323*	Piston Tilting	
150 ***	600 lbs. S.W. Edwards 2678Y* & 4638Y* 150 lbs. B.W Chapman List 123*	Piston Tilting	Unions to be used on size 1½" and smaller only; to be 3000 lb Forged Steel.
125	200 lbs. Scrd Crane 36* 125 lbs. Flgd Chapman List 23*	Horiz. Swing Tilting	
ACID	150 lbs. Flanged Aloyco 371*		
DEMINERALIZED WATER	150 lb. Flanged Ends & Cap Crane 18837*		
DEMINERALIZED WASTE			
1500 CRVH 1500 CRH	1500 lbs S.W. Edwards 2278* None	Piston	
BRASS	200 lbs. Walseal * No. 420WS	Swing	Unions to be used on size 2½" and smaller only; to be 150 lb. bronze
CAST IRON			
COOLING WATER	200 lbs. Scrd Crane 36* 125 lbs. Flgd. Chapman List 23*	Horiz. Swing Tilting	

GENERAL NOTES:

Note A - Use welded connections wherever practical in preference to flanged joints.

Note B - Use screwed connections wherever practical in preference to flanged joints.

** Note C - Material to be type 304 stainless steel as specified and also in accordance with the requirements of ASA Code for Pressure Piping ASA B-31 as supplemented by applicable Nuclear Case interpretations. The following to be considered mandatory for this project
a. Tension & Bend tests on each length of pipe.
b. Dye penetrant check of all welds.
d. Complete ultrasonic inspection of all plates in making pipe.
e. Items a, b and d above apply only in sizes 8" and larger to 900 S.S. class.

Note D - 100% radiography of welds is required in the following specific areas:
a. For all classes of piping (including both shop and field welds) for joints which will be enclosed within the concrete biological shield so as to be inaccesible when the installation is completed.
b. In high temperature steam lines from the pressure vessel to the main steam stop valve, and to the emergency condenser steam injection trip valves.
c. In the main saturated steam line between the pressure vessel and the safety valves.

Note E - Bends having radii of less than 5 pipe diameters shall be used only where specifically called for on the piping drawings.

Note F - Material for ASTM Spec. A 351 Gr CF8 shall be as modified by ASA Piping Code Case N-10

* or approved equal

*** See notes on piping drawings. S.W. in 2" size will be allowed at option of Contractor, where consumable insert rings are not used

LEGEND

B.W.	Butt Welded
S.W.	Socket Welded
W.N.	Weld Neck
R.F.	Raised Face
F.F.	Flat Face
T's	Tee Fittings
Y's	Y Fittings
S.S.	Stainless Steel
C.R.	Chrome Moly
C.R.H.	Chrome Moly High Temperature

Ref. Dwg. JM 40-M-63 Rev. 3

Fig. 400.1-3 Piping schedule.

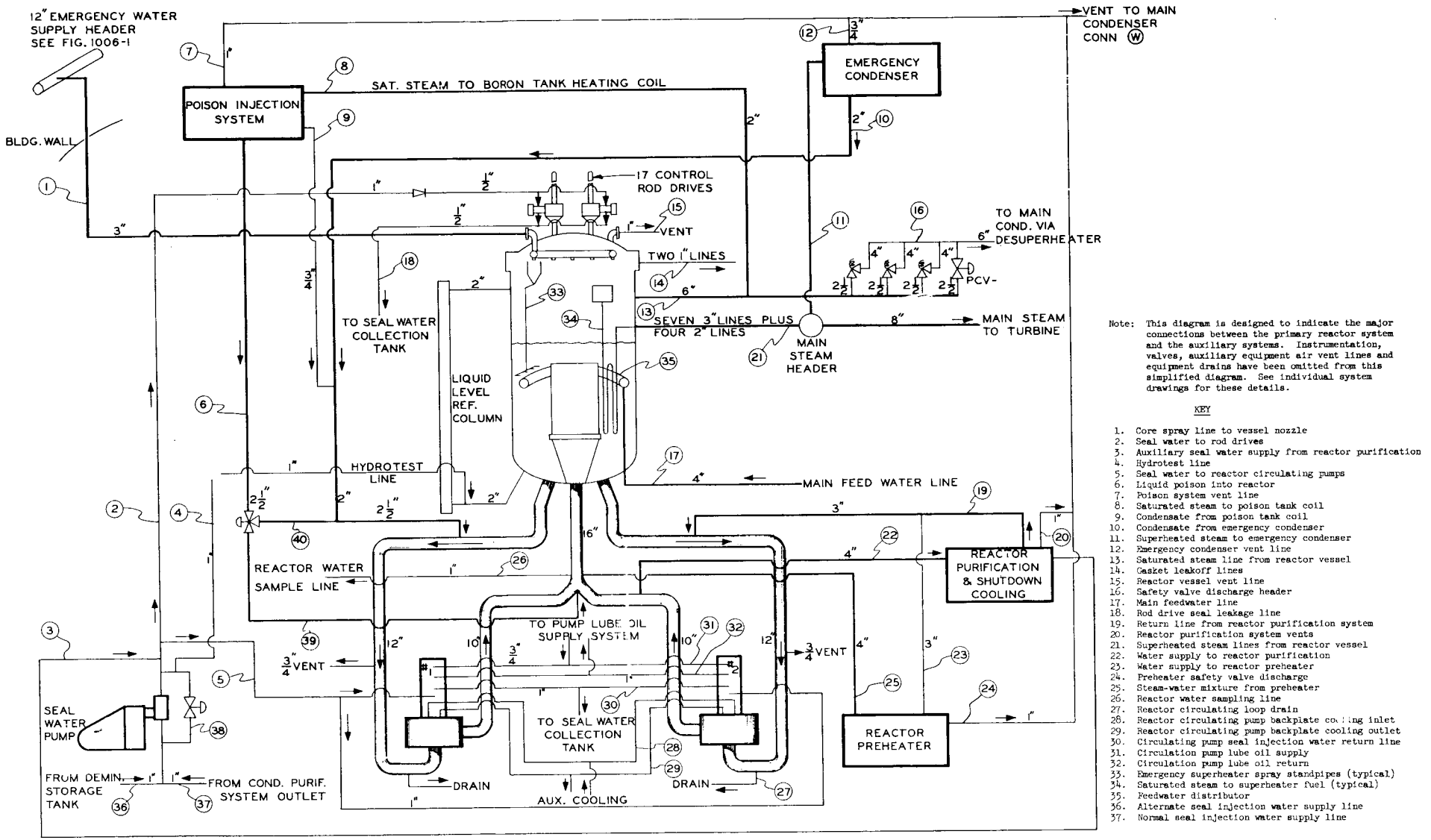

Note: This diagram is designed to indicate the major connections between the primary reactor system and the auxiliary systems. Instrumentation, valves, auxiliary equipment air vent lines and equipment drains have been omitted from this simplified diagram. See individual system drawings for these details.

KEY

1. Core spray line to vessel nozzle
2. Seal water to rod drives
3. Auxiliary seal water supply from reactor purification
4. Hydrotest line
5. Seal water to reactor circulating pumps
6. Liquid poison into reactor
7. Poison system vent line
8. Saturated steam to poison tank coil
9. Condensate from poison tank coil
10. Condensate from emergency condenser
11. Superheated steam to emergency condenser
12. Emergency condenser vent line
13. Saturated steam line from reactor vessel
14. Gasket leakoff lines
15. Reactor vessel vent line
16. Safety valve discharge header
17. Main feedwater line
18. Rod drive seal leakage line
19. Return line from reactor purification system
20. Reactor purification system vents
21. Superheated steam lines from reactor vessel
22. Water supply to reactor purification
23. Water supply to reactor preheater
24. Preheater safety valve discharge
25. Steam-water mixture from preheater
26. Reactor water sampling line
27. Reactor circulating loop drain
28. Reactor circulating pump backplate cooling inlet
29. Reactor circulating pump backplate cooling outlet
30. Circulating pump seal injection water return line
31. Circulation pump lube oil supply
32. Circulation pump lube oil return
33. Emergency superheater spray standpipes (typical)
34. Saturated steam to superheater fuel (typical)
35. Feedwater distributor
36. Alternate seal injection water supply line
37. Normal seal injection water supply line

Fig. 400.1-4 Reactor auxiliary systems diagram.

401. REACTOR WATER CIRCULATION SYSTEM

The BONUS plant utilizes forced circulation of the core coolant at a rate of 9000 gal/min to limit the void content of the boiling region at rated thermal power and to promote hydraulic stability in the reactor coolant channels. To provide symmetrical withdrawal of water from the reactor vessel, twin pump loops are used. Should either or both pumps fail or should the flow be reduced below 70 per cent, the reactor is scrammed. Each loop extends downward from the bottom of the reactor pressure vessel, and is equipped with a single centrifugal pump which has a nominal capacity of 4500 gal/min at 67 ft developed head. The two loops are joined together downstream of the water-circulation pumps to form a single return line which is connected directly to the bottom center of the pressure vessel.

The closed flow circuit for the reactor circulating water is as follows: (see Fig. 301-2)

1) Hot water leaving the top of the core superstructure flows radially outward and down the annular downcomer between the upper rod guide structure and the pressure-vessel wall at a velocity of approximately 0.7 ft/sec. As this saturated water moves downward toward the two 12-in. outlet nozzles leading to the water-circulation pumps, feedwater which is being pumped back from the main condenser is added from a ring header mounted in the downcomer in the vicinity of the core. The water velocity in the region of the feedwater ring header and within the thermal shield and core support baffle is 2.4 fps. Below the feedwater ring the velocity is 1.4 fps. The addition of the 354°F feedwater reduces the temperature of the water flowing into the circulation loops approximately 8°F below the saturation temperature. This subcooling insures against cavitation in the 12-in. nozzles as the water leaves the vessel, and also increases the net positive suction head available on the suction side of the water-circulation pumps.

2) The water leaving the pressure vessel continues its downward flow through two 12-in. pipes which pass vertically through the dense concrete bottom shield plug into the pump room below, connecting with the suction nozzle of each water-circulation pump, as shown schematically in Fig. 401-1. The circulating water leaves the pumps through a pair of 10-in. Schedule 100 discharge lines. These lines subsequently connect into a 10 x 10 x 16-in. Y-fitting which conducts the water through the bottom shield plug and back into the pressure vessel. The 16-in. line discharges into the conical core support plenum chamber just beneath the reactor core plate, and the circulating water completes its circuit by flowing upward through the coolant passages in the boiling zone.

Both the 12-in. suction and 10-in. discharge lines contain 440-volt a-c motor-operated butt-welded, pressure-seal bonnet gate valves capable of withstanding a 950-psi differential pressure across the gate. These valves are installed primarily to remotely isolate the pumps from the pressure vessel for pump maintenance, and may be used in an emergency to stop any leakage in the water-circulation system, such as for the case of a failure of a pump shaft seal. Figure 401-2 shows the controls and interlocks for these control valves. Valve limit switches are provided on each of these valves for remote limit position indication and interlock controls; the reactor will scram if these valves are not in their full open position. Similarly the reactor control rods cannot be withdrawn if the valves are not in the wide open position.

Both the inlet and outlet valves have local manual controls. The inlet valve has only two positions, either full open or full closed, whereas the outlet valves can be positioned at any intermediate position between full open and full closed within the flow limits prescribed.

Interlocks prevent the starting of the pumps unless the inlet valve is in the full open position. Additional interlocks prevent pump starting unless the lubricant pressure to the pump bearings is at the proper value and the seal water pump is in service. The diagrams defining the functioning of these interlocks are shown in Fig. 401-3. Figure 401-4 shows the electrical control circuit for the lube oil pump, for each circulation pump unit.

Cast stainless-steel, 1500-lb, tilting-disc check valves with pressure-seal covers are provided at the outlet of each pump to prevent backflow in the event of a failure of one of the two pumps.

All equipment and all piping in the reactor water-circulation system are designed for 1150 psig and are made of Type 304 stainless steel. Welding is with consumable inserts, and all weld joints are radiographed. The water-circulation pumps are Peerless, vertically-mounted, half-capacity, single-volute, single-suction type with a developed head of 59 ft at rated flow. The pump head curve is shown in Fig. 401-5. Pump support is by suspension from the reactor vessel through the water-circulation loop piping with additional spring support at the floor of the pump room. The pump is driven by a direct-coupled, 1760-rpm, 440-V, 3-phase, 75-hp electric motor. A pictorial view of the pump is shown in Fig. 401-6.

Leakage of water around the pump shaft will be held to a minimum through the use of tandem double mechanical shaft seals as shown in Fig. 401-7. Seal injection water for cooling prevents flashing across the seal faces, thus assuring proper lubrication of the mating surfaces and preventing accelerated wear. The temperature of the seal water is monitored to insure proper cooling. Injection seal water is guaranteed by the pump manufacturer not to exceed 4 lb/hr to the pump intermediate pressure chamber. Approximately half of this flow will pass into the

primary system and half to the condenser by way of a drain system. Individual flow and temperature monitors are also provided in the 10-in. outlet lines from the pump as shown in Fig. 401-1.

Flow measurements are made in each of the pump discharge lines with Gentile Tube flow meters, and flow in each loop is recorded in the control room. Each Gentile Tube is designed for a 1,700,000 lb/hr normal flow and a 2,500,000 lb/hr maximum flow at 975 psig pressure and 526°F temperature. Material of construction is Type 304 stainless steel.

The 2-1/2-in. Schedule 80 emergency poison injection line enters the primary system at the junction of the pump outlet lines and the 16-in. main vessel return line. The injection piping is supported internally within the return line and is carried into the core inlet plenum.

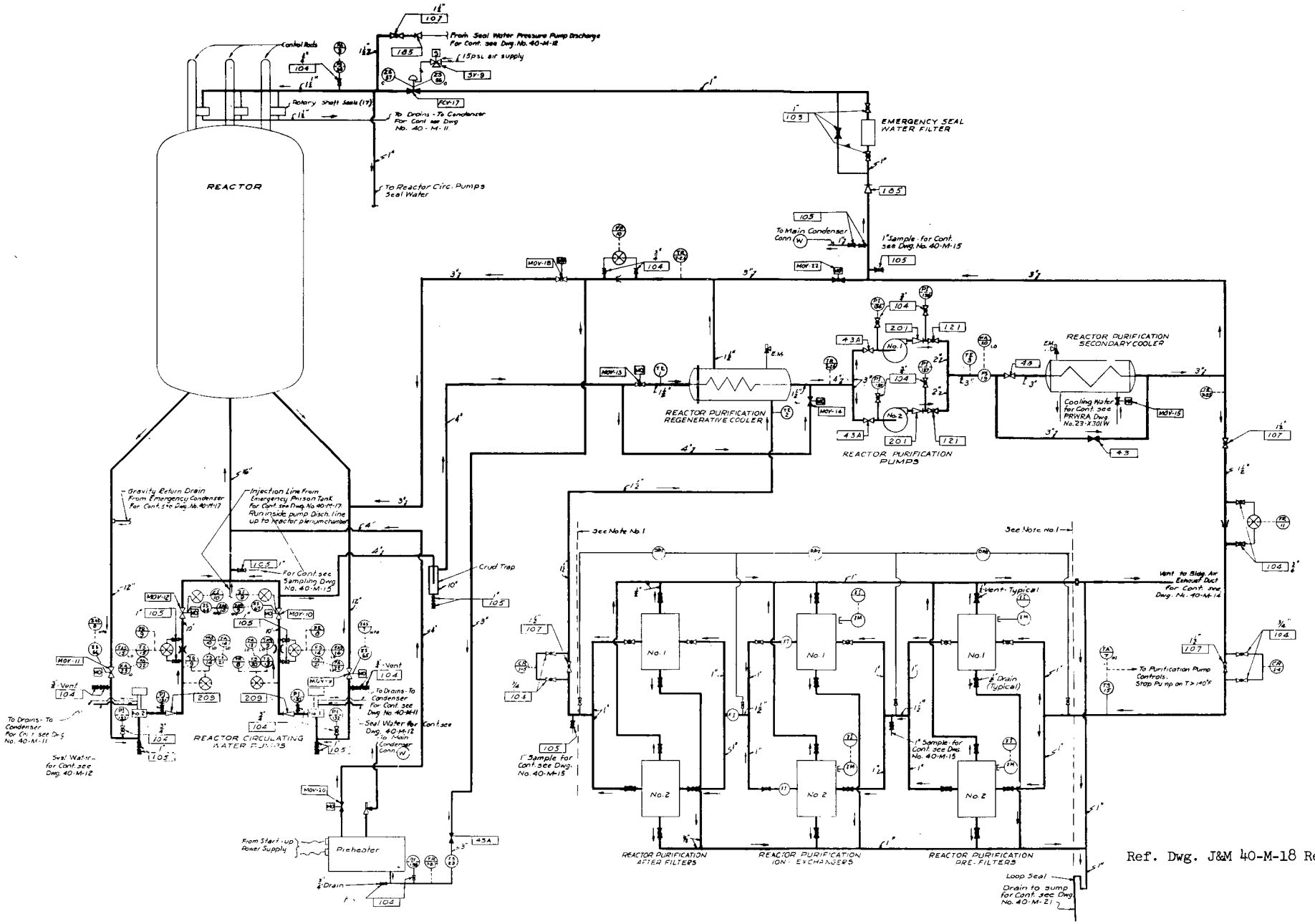

Ref. Dwg. J&M 40-M-18 Rev. 5

Fig. 401-1 Flow diagram of reactor circulating water, purification, shut-down cooling, and preheating.

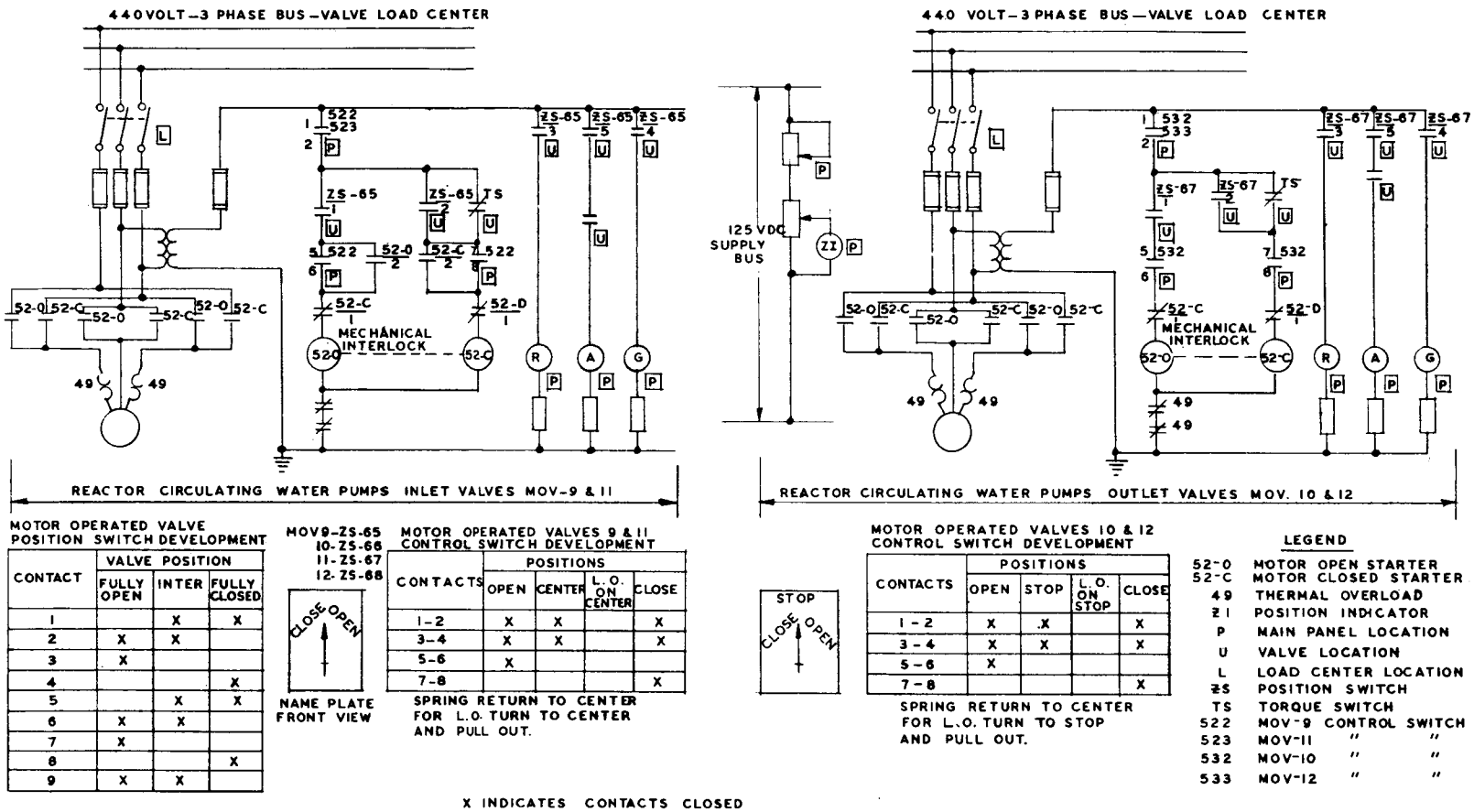

CONTACT	VALVE POSITION		
	FULLY OPEN	INTER	FULLY CLOSED
1		X	X
2	X	X	
3	X		
4			X
5		X	X
6	X	X	
7	X		
8			X
9	X	X	

CONTACTS	POSITIONS			
	OPEN	CENTER	L.O. ON CENTER	CLOSE
1-2	X	X		X
3-4	X	X		X
5-6	X			
7-8				X

CONTACTS	POSITIONS			
	OPEN	STOP	L.O. ON STOP	CLOSE
1-2	X	X		X
3-4	X	X		X
5-6	X			
7-8				X

Ref. Dwg. J&M 40-E-10 Rev. 2

Fig. 401-2 Schematic diagram of electrical control for reactor water-circulation system control valves.

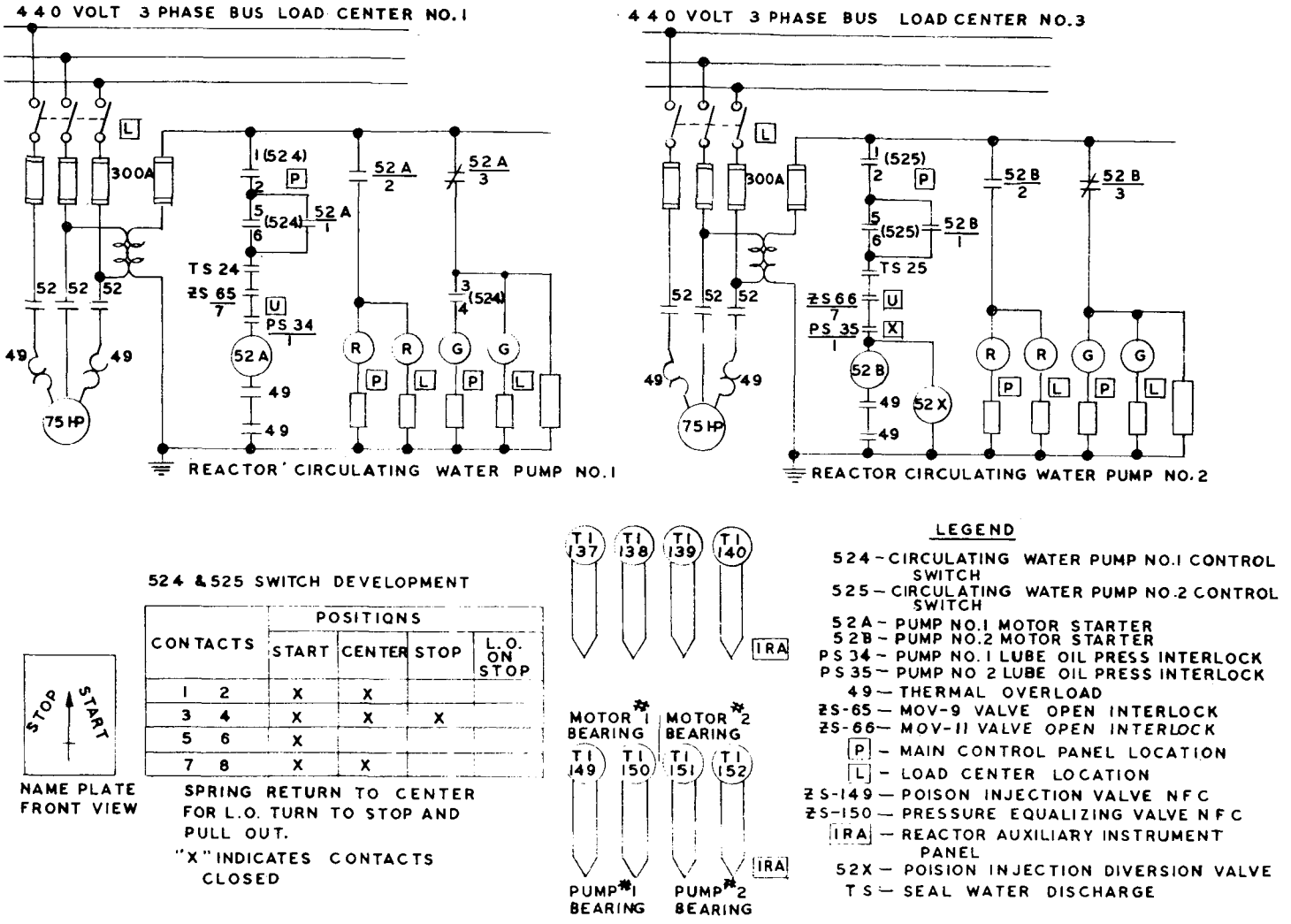

Ref. Dwg. J&M 40-E-10 Rev. 2

Fig. 401-3 Schematic diagram of electrical control for reactor water-circulation pumps.

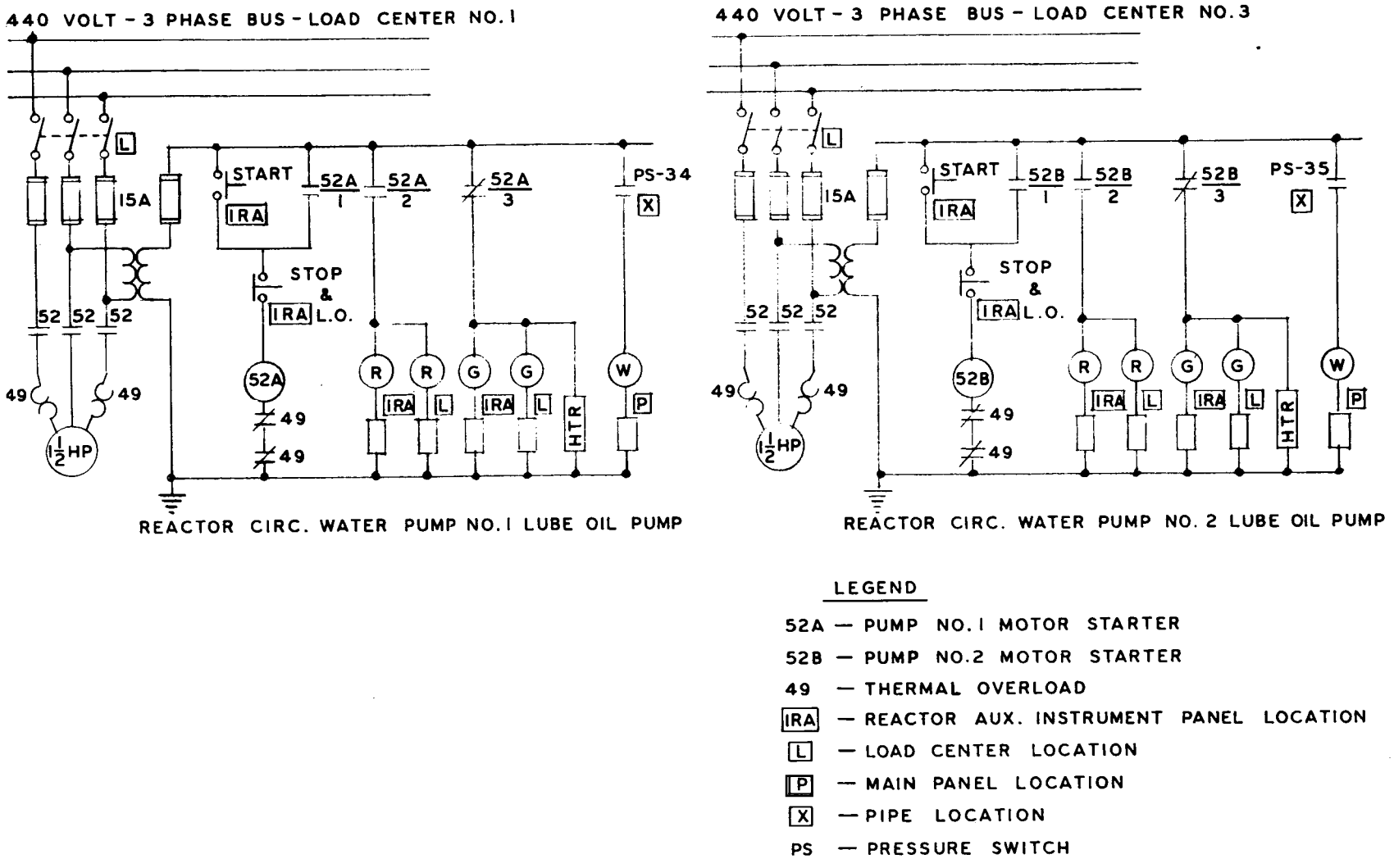

LEGEND

52A — PUMP NO. 1 MOTOR STARTER
52B — PUMP NO. 2 MOTOR STARTER
49 — THERMAL OVERLOAD
[IRA] — REACTOR AUX. INSTRUMENT PANEL LOCATION
[L] — LOAD CENTER LOCATION
[P] — MAIN PANEL LOCATION
[X] — PIPE LOCATION
PS — PRESSURE SWITCH

Ref. Dwg. J&M 40-E-18 Rev. 1

Fig. 401-4 Schematic diagram of wiring of reactor water-circulation lubricating pumps.

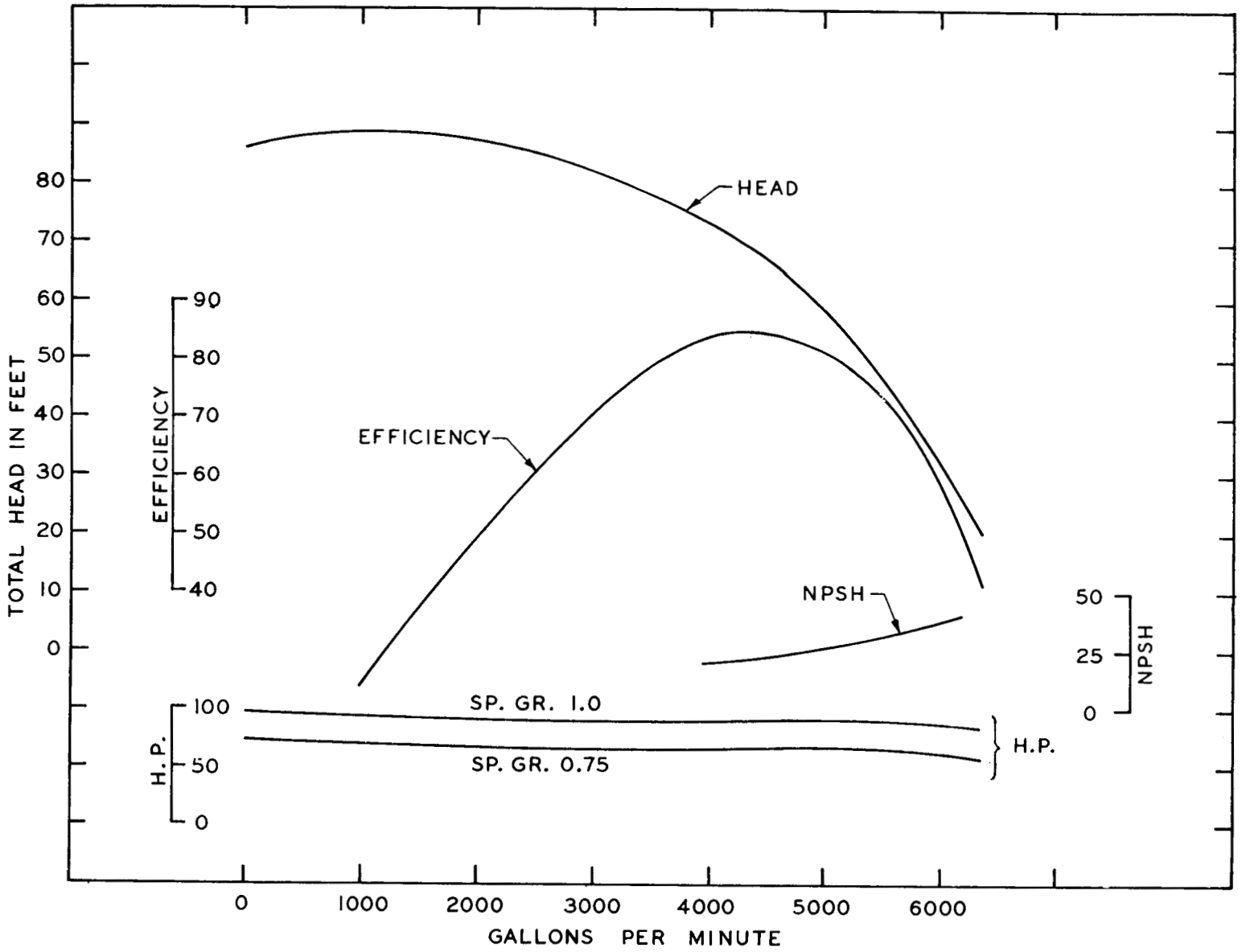

Ref. Peerless Pump Co. Curve No. 2836176

Fig. 401-5 Reactor circulating water pump performance curves.

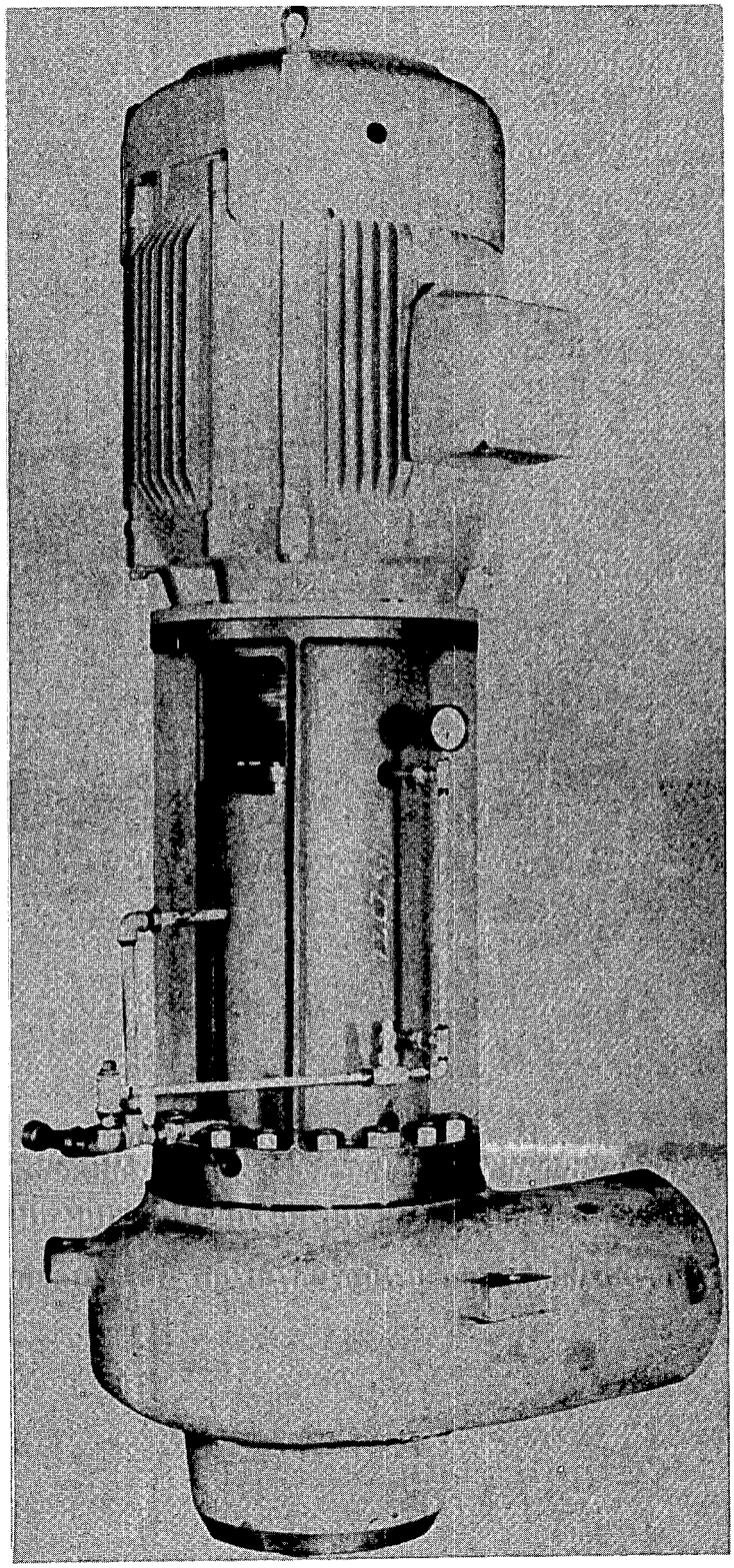

Fig. 401-6 Reactor water-circulation pump.

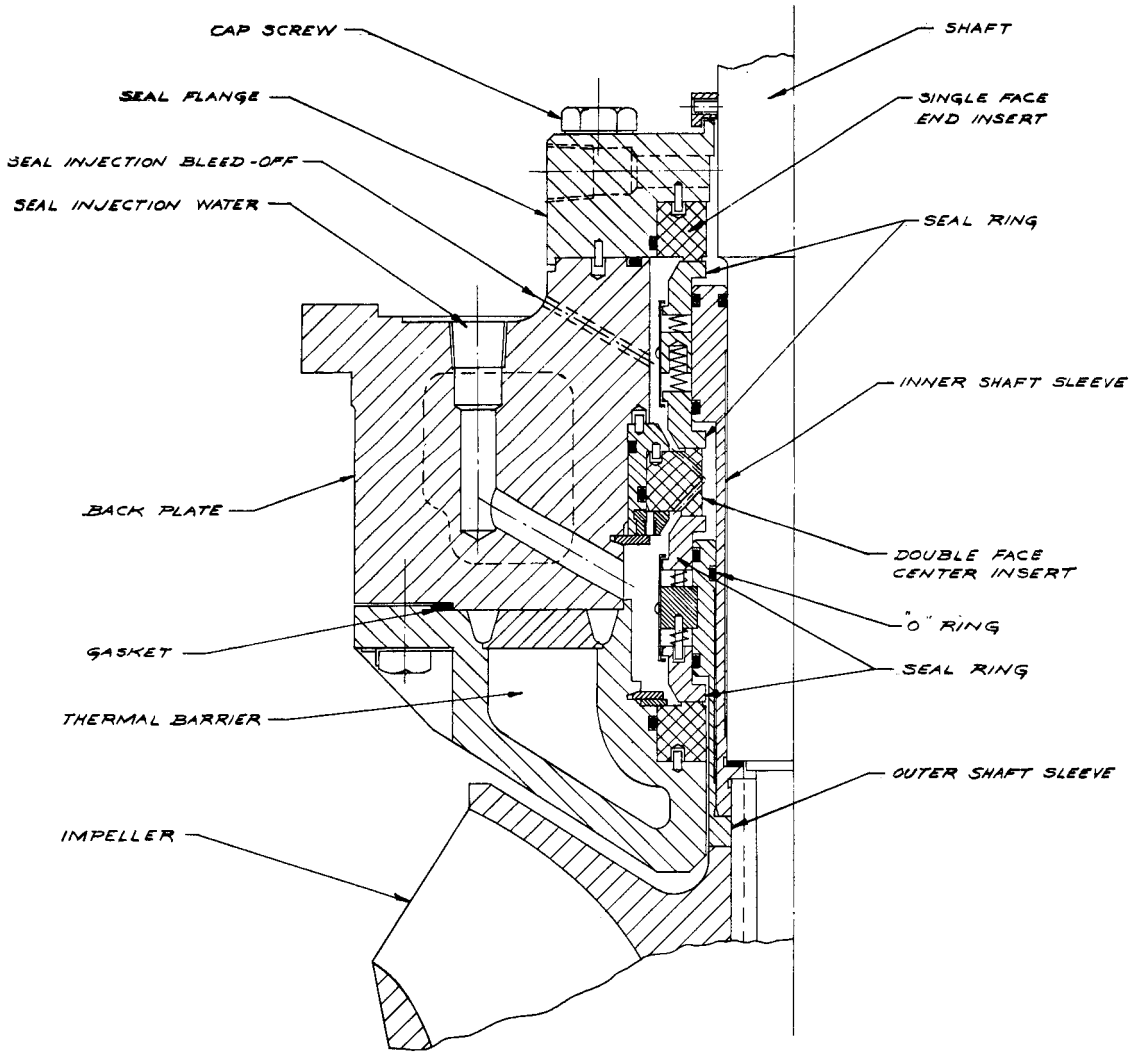

Ref. Dwg. Peerless Pump Co. 2736776

Fig. 401-7 Reactor water circulating pump tandem double mechanical shaft seal.

402. EMERGENCY COOLING SYSTEM

The gravity-actuated emergency cooling system is a back-up protection system which absorbs the reactor shutdown afterheat in the event the normal steam flow path to the turbine condenser is isolated. By dissipating the reactor heat by the condensation of the superheated steam generated in the superheater fuel elements, the superheater fuel elements are cooled without exceeding allowable clad temperatures, and the reactor pressure is maintained at design operating level or lower. The emergency cooling system is designed to condense 7600 lb/hr of 950°F, 950 psig steam, return the condensate by gravity to the reactor pressure vessel, and maintain the reactor water level constant during the period the system is in service. The heat absorption when condensing normal 900°F steam at design pressure corresponds to 4.20 per cent of reactor thermal rating. In addition, since the system must operate during power outages, the emergency cooling system is designed to operate continuously for eight (8) hours without attendance; 21,000 lb of water are stored in the emergency condenser unit which absorbs the decreasing decay heat with time over this period by generating low-pressure steam. Figure 402-1 shows schematically the components of the emergency cooling system.

The major components consist of 1) the emergency condenser, 2) the dual parallel set of air-operated valves in the 4-in. superheated-steam line leading to the condenser from the 10-in. superheated-steam header, and 3) a similar set of control valves with check valves in series in the 2-in. condensate return from the condenser to the suction of No. 2 reactor water-circulation pump. Both sets of valves are located adjacent to the emergency condenser which is mounted on elevation 74 ft, 0 in. platform on the west side of the reactor. The 4-in. Schedule 80 steam piping and valves to the emergency condenser are 1-1/4 per cent Cr-1/2 per cent Mo and the condensate return 2-in. Schedule 80 piping and valves are stainless steel Type 304. Duplicate valves are used for added safety, and the capacity of the cast-body single-port valves is such that even should only one valve of each pair open, the system will operate as required.

The emergency condenser unit is a 6-ft-ID horizontal, carbon steel water tank, 17 ft, 3 in. long between dished head seams, and contains a multitube heat exchanger bundle mounted on the bottom centerline of the tank. The 25-psig, 1/2-in. wall, tank is designed in accordance with the requirement of the Unfired Pressure Vessel Code; the stainless steel Type 304 tube bundle is designed for 1150 psig, 950°F, and 1000 operating cycles in accordance with Section VIII requirements supplemented by the requirements of Nuclear Code Case 1270N and "Tentative Structural Design Basis for Reactor Pressure Vessels and Associated Components," Report PB-151987.

The heat exchanger consists of twenty-five 1-in. Schedule 80 pipes welded into 1-3/4-in. thick tube sheets spaced 15 ft, 9 in. apart which in turn are welded to the inlet and outlet channels at each end. The effective heat-transfer area between tube sheets is 143 sq ft; additional heat-transfer surface is, however, provided by the 4 in. Schedule 80 submerged inlet steam pipe welded to the inlet channel. Vents are provided in the top of each channel for removal of air and/or radiolytic gas which may accumulate in the unit; however, it is expected that radiolytic gas accumulation in the tube side of the unit will be negligible since the unit is in service only when the reactor is shut down. The tube bundle is anchored at the inlet end and is free to expand towards the pitched condensate drain end; the differential growth of the bundle relative to the tank is taken up by a carbon steel bellows welded to the tank and to the condensate drain nozzle. A similar-type bellows joint connection between the tank head and inlet pipe is also provided to absorb the thermal growth of the inlet pipe relative to the tank wall penetration.

The inlet line is designed with an internal thermal sleeve to minimize thermal shocking of the pipe penetration through the tank wall when the control valves are operated and the 900°F steam enters the unit which prior to operation, is at essentially ambient temperature (100°F). Since the walls of the unit are well below saturation temperature (540°F), the incoming steam immediately condenses on all surfaces, and the inner surfaces of the walls transiently are exposed to a temperature of 540°F. At steady-state operating conditions the differential temperatures in the pressure-containing member walls are reduced due to the film resistances on the inside condensing and outer boiling surfaces.

The emergency condenser is made operative by the simultaneous opening of the quick-opening, full-port steam injection and percentage flow full port condensate drain valves. Both sets of diaphragm, air-operated valves are direct-opening-type and are provided with handjacks and 125-volt a-c three-way solenoid pilot valves; the valves fail in the open position on loss of air pressure or electric power. The flow of steam from the 10-in. header (el. 51 ft, 2 in.) to the condensing coil (el. 79 ft, 9 in. at drain end centerline) and the return to the reactor vessel (water level 54 ft, 8 in.) is due to the difference in elevation between the components. The pressure drop between the steam inlet and condensate outlet when condensing at rated design conditions is only 0.15 psi. The respective steam and condensate drains will automatically trip open by deenergizing the pilot valve solenoid if any of the following events occur: (Figure 402-2 illustrates schematically the electrical control circuits which control the opening and closure of the respective valves).

1) If either the minimum flow or turbine bypass valve is closed when the turbine trip valve or turbine admission valve is also closed; this condition represents an interruption of the steam flow path to the normal heat sink, the turbine condenser.

2) The main steam stop valve is off the 100 per cent open position.
3) Loss of power.
4) Loss of control and service air.
5) Low vacuum (less than 20 inches of Hg) in the turbine condenser which represents abnormal sea water circulation or high air inleakage to the condenser.
6) By actuation of the control switch on the reactor console panel.
7) By actuation of the emergency control switch in the reactor shutdown station in the entrance building.

Since the emergency cooling system is designed to absorb only the shutdown decay heat of the reactor and since there will be a pressure differential which will cause reverse flow of condensate from the reactor through the tube bundle and into the main steam header, the system should not be operated when the reactor is at power level. Although check valves are in each twin condensate control valve line, cases have occurred wherein the check valves have remained open. To protect the turbine from damage due to excess water carryover, the initiation of the emergency condenser will also immediately trip the turbine off the line which in turn scrams the reactor.

Since the decay heat rate of the core decreases with time after shutdown, means are provided for adjusting the heat absorption so as to not reduce the reactor pressure too rapidly. The condensate drain valves may be operated either automatically or under manual control. In the latter operation mode the valve opening can be adjusted from the control room so as to regulate the rate of steam condensation; the rate is controlled manually by the operator observing reactor pressure.

Access to the tube bundle of the emergency condenser can be accomplished for inspection, cleaning, and/or repair of the unit, through the 18-in. manhole on the tank top. Access is made during reactor shutdown periods and after draining the tank to the retention tanks. The filling of the tank with demineralized water from the makeup water treatment system to within one (1) inch of the top of the sight glass mounted on the head, is accomplished manually at the unit. The need for water addition to the tank is annunciated when the water level drops to 90 per cent of full normal useful water; the annunciator circuit is initiated by the closure of the normally open switch contacts in the float-operated level switch mounted on the shell.

The 7450 lb/hr of 5 psig saturated steam formed in the tank from condensing the 7840 lb/hr of 900°F steam is normally discharged outside the containment building by passage through the two in-series 8-in. building isolation butterfly valves in the pipe line leaving the top of the building. Upstream of these cast iron body butterfly valves, an 8-in. pipe line leads to the northside of the fuel storage pool. On detection of high radiation levels in the steam discharged from the building, indicating a leak in the heat exchanger, the valves close by

the deenergizing of the three-way 125-volt d-c pilot solenoid valves and, if steam is being produced in the emergency condenser, the low pressure steam is condensed on entering 6 ft below the pool level.

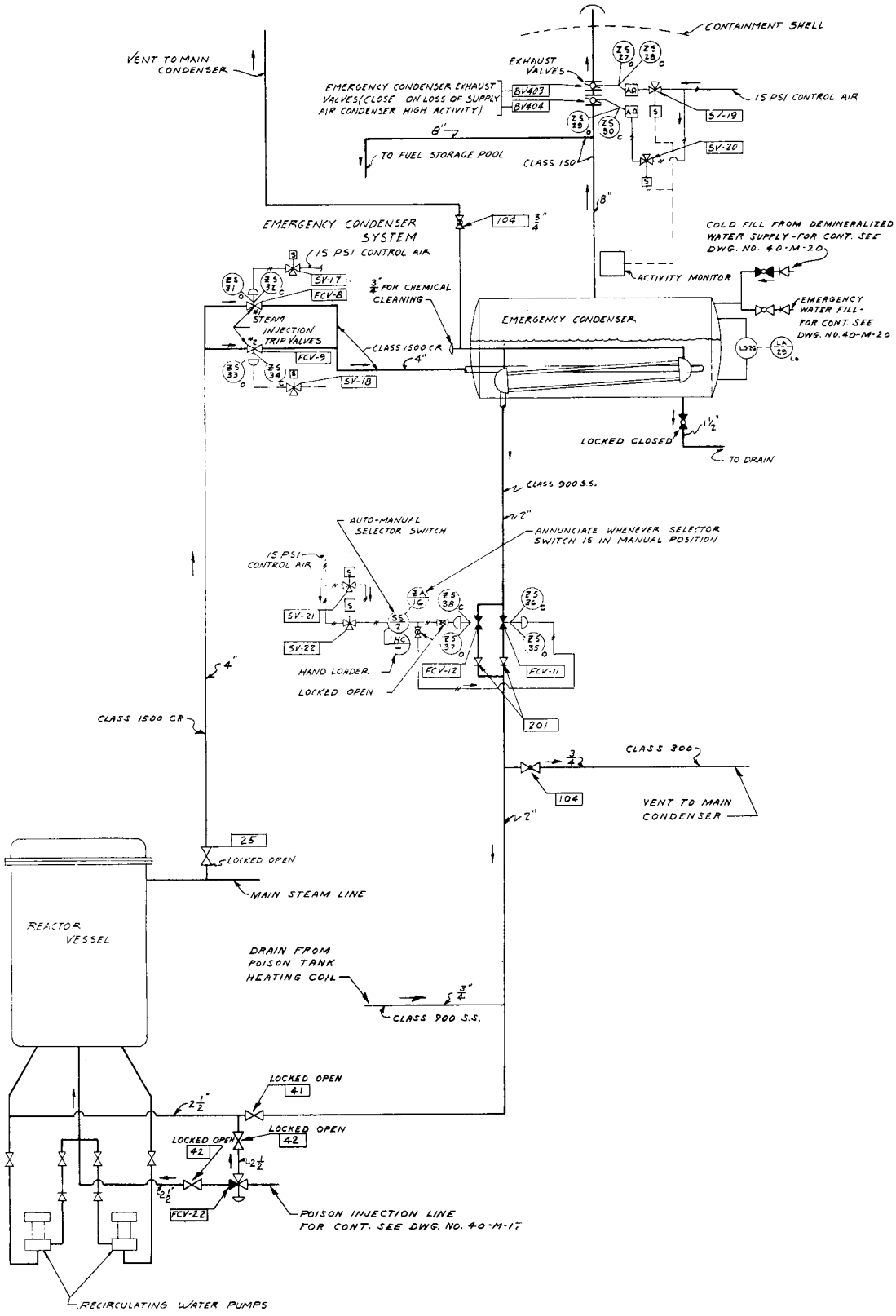

Ref. Dwg. J&M 40-M-17 Rev. 4

Fig. 402-1 Schematic flow diagram of emergency cooling system.

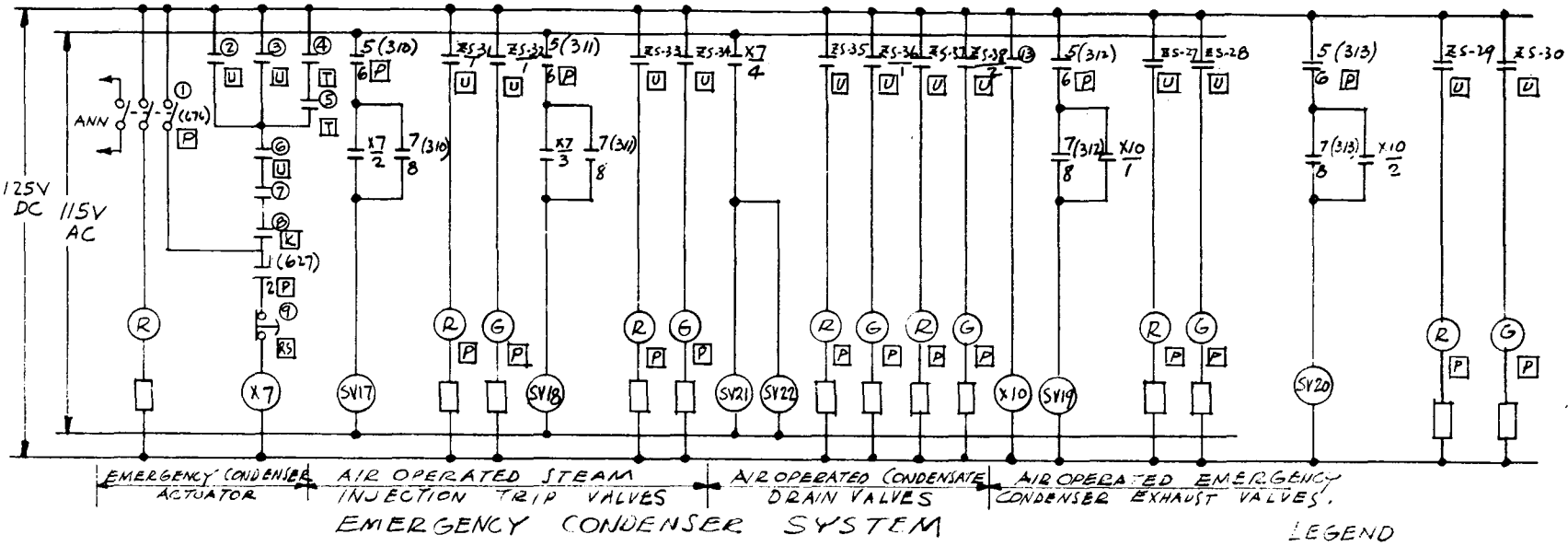

ODD NUMBERED

CONTACTS	POSITIONS	
	FULL OPEN	ALL POSITIONS
1	X	
2		X

EVEN NUMBERED

CONTACTS	POSITIONS	
	FULL OPEN	ALL POSITIONS
1	X	
2		X

POSITION SWITCH DEVELOPMENT

EMERGENCY CONDENSER ACTUATOR CONTROL SWITCH DEVELOPMENT

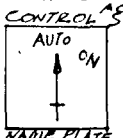

CONTACTS	POSITIONS	
	ON	AUTO
1-2		X
3-4	X	

NO SPRING RETURN

"X" INDICATES CONTACTS CLOSED

INJECTION TRIP VALVE CONTROL SWITCH DEVELOPMENT

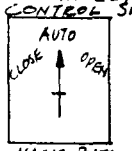

CONTACTS	POSITIONS		
	OPEN	AUTO	CLOSE
1-2	X	X	
3-4	X		
5-6		X	X
7-8			X

SPRING RETURN TO AUTO.

EXHAUST VALVES CONTROL SWITCH DEVELOPMENT

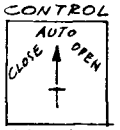

CONTACTS	POSITIONS		
	OPEN	AUTO	CLOSE
1-2		X	X
3-4			X
5-6	X	X	
7-8	X		

SPRING RETURN TO AUTO

LEGEND

627- ACTUATOR CONTROL SWITCH
310 - SV-17 TRIP VALVE CONTROL SWITCH
311 - SV-18 TRIP VALVE CONTROL SWITCH
312 - SV-19 EXHAUST VALVE CONTROL SWITCH
313 - SV-20 EXHAUST VALVE CONTROL SWITCH

① KEY OPERATED BYPASS SWITCH (674)
② MFBV POSITION SWITCH
③ BPV " "
④ TTV " "
⑤ TAV " "
⑥ MSSV " "
⑦ LOSS OF POWER INTERLOCK
⑧ CONDENSER VACUUM LOW INTERLOCK
⑨ PILLBOX SCRAM BUTTON

ZS POSITION SWITCH
K CONDENSER LOCATION
P MAIN PANEL LOCATION
PS PILL BOX LOCATION
T TURBINE LOCATION
V VALVE LOCATION

Ref. Dwg. J&M 40-E-7 Rev. 2

Fig. 402-2 Schematic diagram of electrical control circuits for emergency condenser.

403. LIQUID POISON SYSTEM

As an additional means of safely shutting down the reactor, a gravity-actuated pressurized liquid poison system connected directly to the reactor primary water circulation system, as shown in Fig. 403-1, is used. A 20 wt.% boric acid solution maintained at 950 psig and 540°F in water is stored in the poison injection tank mounted on the platform elevation 74 ft, 0 in., approximately 18 feet above the reactor operating water level.

The 114 gallons (at 193°F) of boric acid stored in this vessel contain 75 Kg of H_3BO_3 which is sufficient to make the reactor at least 1.6 per cent sub-critical (with the reactor cold, clean, and all rods and shims out of the core), assuming even distribution of the poison solution throughout the primary system. The 2-1/2-in. Schedule 80 stainless injection piping from the poison tank to the reactor vessel is arranged so that all of the poison will flow into the reactor in about three minutes.

To permit gravity injection of the poison solution under all operating conditions, an automatic diversion valve is installed in the poison injection line. If reactor circulating pump No. 2 is operating, this valve diverts the poison solution into the No. 2 pump suction line; if No. 2 pump is not running, the poison solution is injected directly beneath the core plate. The diversion valve is an air-operated 3-way valve which is spring loaded to divert the poison to the line below the core plate anytime power to pump No. 2 is turned off. This is accomplished by tripping the diversion valve solenoid directly from a contact on the motor switch gear for pump No. 2 so that diversion is completely automatic on loss of power to the motor. A manual, spring return, valve-exercise switch is provided in the solenoid circuit to permit checking the operation of the diversion valve from the main control panel while the plant is in operation. Valve position indicating lights are also provided on the main control panel. Emergency movement of the diversion valve is required only on sudden loss of pump power coupled with a demand for liquid poison; such movement is spring actuated and requires no auxiliary power.

To prevent thermal shock to the vessel during poison injection, the poison solution is kept hot by a 12-in.-dia. steam coil fabricated from 2-in. Schedule 80 pipe within the poison tank and which is supplied with saturated steam from the reactor, as shown schematically in Fig. 403-1. The contents of the poison injection tank will be maintained at approximately reactor operating conditions, 950 psig and 540°F. The saturated condensate from the heating coil is returned to the reactor vessel by gravity by way of the reactor water-circulation pump suction. A 3/4-in. purge line connects the outlet of the heating coil with the main condenser. By manually operating the purge valve in this line, steam can be bled from the coil to remove any noncondensable gases accumulated in the coil.

Electrical heaters are provided to keep the poison tank and the injection lines at a temperature of 200°F when the reactor is not pressurized and the system is in standby condition with no steam being supplied to the steam coil. The electric heater system comes on automatically to maintain the temperature at 200°F. In the event of a station power failure, electric power will be provided by the emergency diesel power supply. Should the temperature drop below 185°F, an annunciator alarm is actuated in the control room and all operations affecting the reactor core must be terminated until electric power is restored. The above precautions are taken to insure that no crystallization of the boric acid solution will occur.

Injection of the liquid poison is accomplished by manually actuating the remote-controlled valves in the 1-inch pressure-equalizing line (PCV-8) and in the poison injection line (FCV-7). The pneumatic valve actuators are controlled from the control room, both as individual manual controls and as part of the control group actuated by the emergency bar; remote-manual controls are also provided in the pillbox. Manually operated spool valves are used at all control points making this system independent of electrical power. The pneumatic system is equipped with an accumulator that will provide control air for holding injection valves closed in the event of failure of the normal air supply. Opening valves PCV-8 and FCV-7 allows the poison to flow by gravity through the diversion valve and into the reactor circulating water system as described earlier. Opening the injection valves automatically closes the valve in the return line from the reactor purification circuit and shuts off the purification pumps thus stopping all flow through purification and preventing removal of poison by the purification equipment. Refer to Fig. 403-2 for the electrical control of the poison injection system valves. Pressure equalizing and poison injection valve operation is indicated in the control room and in the pillbox by red and green indicating lights.

Type 304 stainless steel is used for all piping and equipment which is in contact with the poison solution and for the supply and return lines for the steam heating coil.

The line used to inject the poison solution below the core plate passes through the "Y" fitting in the 16-inch circulating water line leading back into the reactor vessel and continues upward through the bottom shield, concentric with the 16-inch pipe, terminating inside the pressure vessel 5 inches below the core plate.

The poison storage vessel is equipped with a sampling line and sample cooler to permit the periodic checking of the boron content of the stored solution while the plant is in operation. Necessary instrumentation is provided to monitor the pressure, the temperature, and the level of the stored solution, which will assure that proper standby conditions exist at all times. High and low liquid level alarms are also provided independent of the liquid level indicator and are annunciated in the control room on the station annunciator. They are

connected to a direct-reading level indicator attached to the poison tank. The temperature is recorded on a multipoint temperature recorder in the control room. A spring-loaded pressure relief valve set for 1150 psig and a manual vent valve are connected to the storage vessel. The relief valve will protect the system should anyone inadvertently apply heat to the system with the poison tank completely full of liquid. The manual vent valve can be used to reduce temperature and pressure in the poison tank at approximately the same rate at which the main vessel is cooled for unloading operations. It can also be used for adjusting the concentration of the stored solution in a situation where extra water is admitted through valve leakage or tests.

The gravity system offers a number of desirable features. It is internally actuated, requiring no external sources of power. It automatically follows any long-term change in the reactor operating temperature, eliminating thermal shock to the reactor upon poison injection. Because of the prompt action of the pressure-equalizing line, the system does not depend on maintenance of a specific pressure differential between the poison tank and the reactor; poison injection will take place smoothly and at the specified rate regardless of the pressure in the reactor. By opening the various valves one at a time, it is possible to test the operation of all parts of the system while the plant is operating without introducing poison into the reactor and without affecting the availability of the system for emergency use. For example, the pressure in the poison tank can be allowed to drop 25 to 50 psi by opening the vent valve or by cutting off the supply of steam to the heating coil for a short time. The injection valves can then be quickly opened and reclosed; the resulting rise in the liquid level in the poison tank will confirm proper operation of the system. Similarly, after the injection valves have been checked, the pressure-equalizing valves can be opened. The pressure in the poison tank will quickly rise back to the normal operating value, once again confirming proper valve operation. Following the system tests, proper poison solution concentration can be restored by slowly venting steam to the condenser through the normal vent line.

The poison injection tank has a total internal volume of 208 gal with an effective poison capacity of at least 190 gal. The vessel is designed for a pressure of 1150 psig at 564°F. Internal diameter is 24 in., and length of straight shell, excluding head flanges, is 98 in. The closure head is a 2:1 ellipsoidal type with a minimum 2-in. flange. The tank is designed to the latest requirements of the ASME code for Unfired Pressure Vessels, Cases 1270N, 1273N and the American Standards Association.

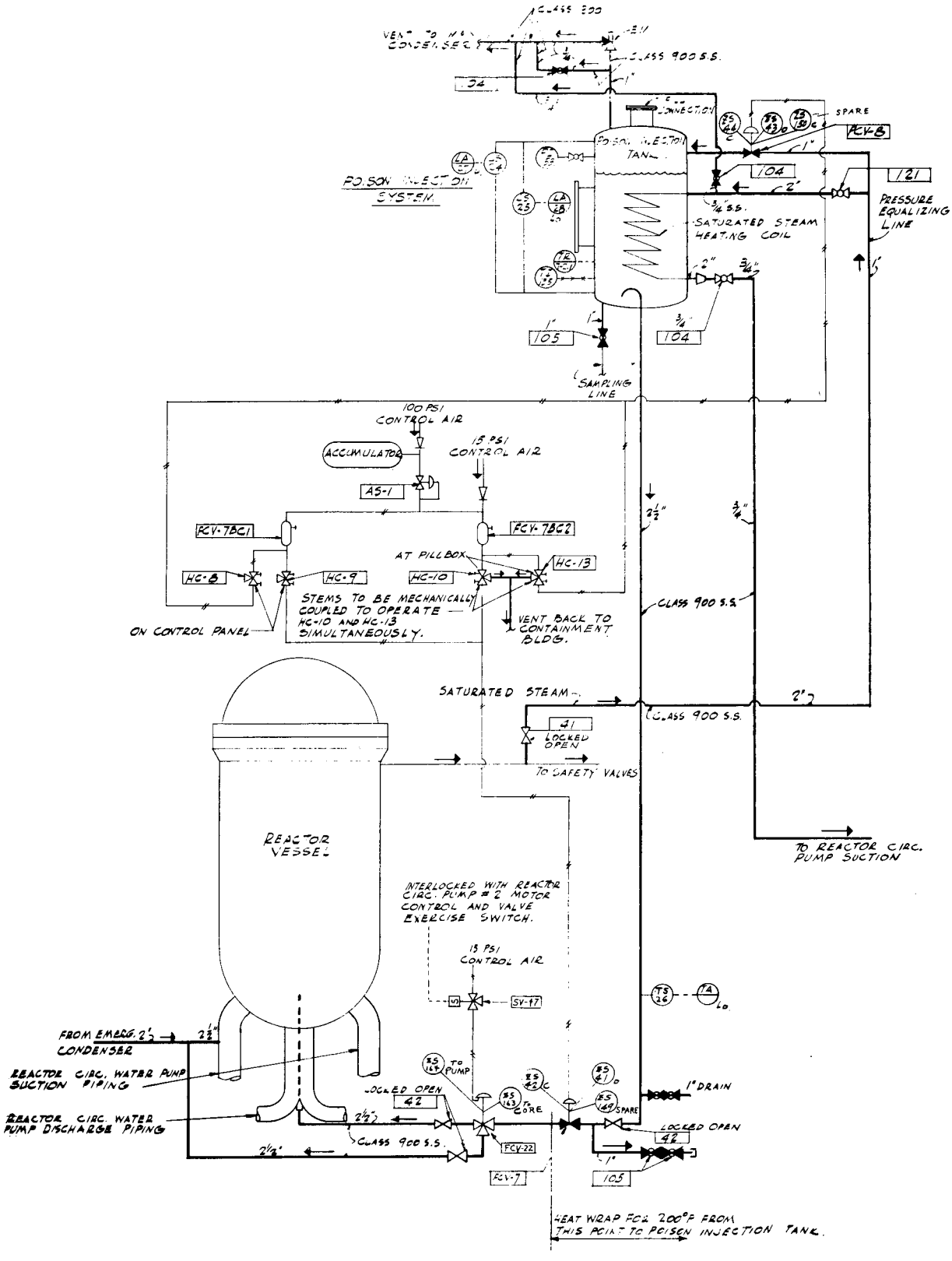

Ref. Dwg. J&M 40-M-17 Rev. 5

Fig. 403-1 Schematic diagram of liquid poison injection system piping.

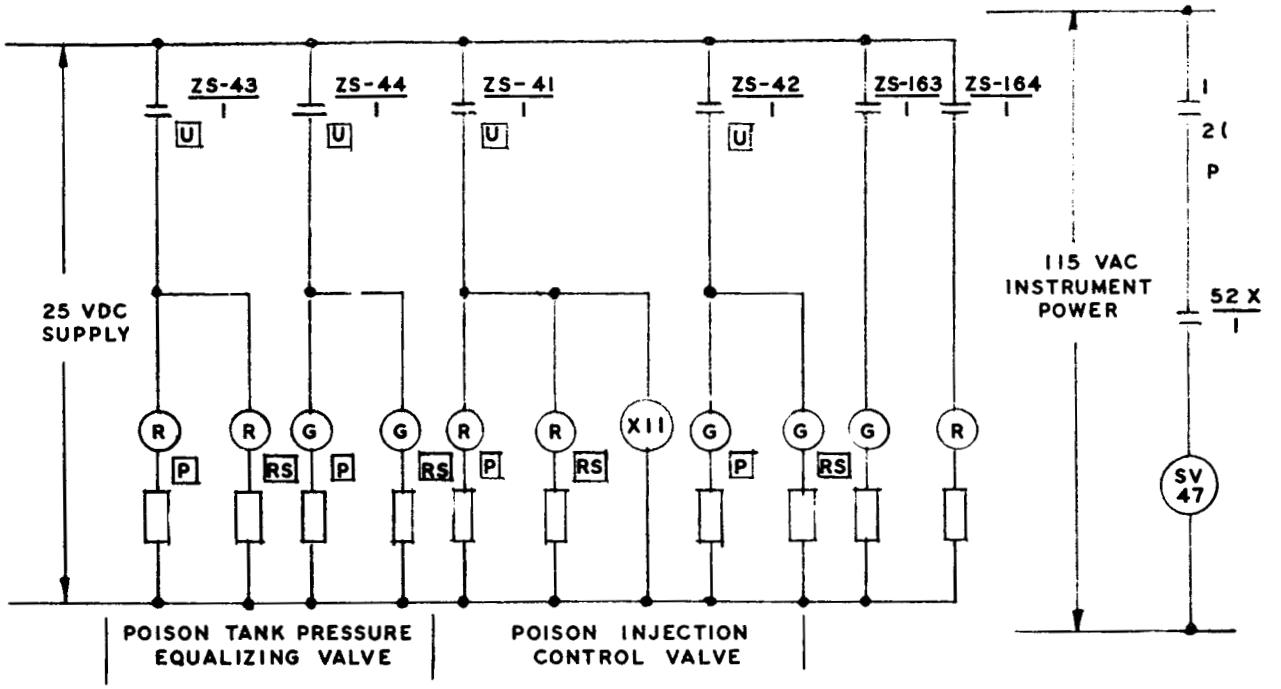

POISON INJECTION SYSTEM

POSITION SWITCHES 41 & 43 DEVELOPMENT

CONTACT	VALVE POSITION	
	FULLY OPEN	ALL POSITIONS
1	X	
2		X

POSITION SWITCHES 42 & 44 DEVELOPMENT

CONTACT	VALVE POSITION	
	FULLY CLOSED	ALL POSITIONS
1	X	
2		X

LEGEND

X-11	INTERLOCK RELAY IN REACTOR PURIFICATION SYSTEM
[P]	MAIN PANEL LOCATION
RS	PILLBOX LOCATION
52X	REACTOR CIRCULATING WATER PUMP NO. 2

Ref. Dwg. J&M 40-E-7 Rev. 2

Fig. 403-2 Schematic wiring diagram of poison injection system valves.

404. REACTOR WATER PREHEATER

It is not feasible to make the flooding coefficient of reactivity for the superheater approach zero, both at the operating temperature and at room temperature. For maximum safety, the BONUS core has been designed so that emptying the superheater assemblies produces a very small decrease in reactivity when the moderator is near the normal operating temperature of 540°F. However, at room temperature, the emptying of the superheater assemblies would cause an increase in reactivity of 0.64% k_{eff} maximum. Startup of the reactor is, therefore, prevented by a moderator temperature interlock set for 500°F. An auxiliary heat source is used to heat the reactor to approximately 525°F before any of the rods are withdrawn. At this temperature, the reactivity effect of emptying the superheaters is essentially zero.

Heating is accomplished by pumping 100 gal/min of reactor water through a 1-Mw, 440-volt, 3-phase, 60-cycle, electric heater, located in the same shielded compartment with the reactor water purification system pumps and coolers. The reactor purification system pumps provide the necessary head to circulate the reactor water from the water-circulation pump discharge header through the heater and return the steam-water mixture back into the 16-in. reactor circulation line downstream of the header. Figure 401-1 shows schematically the flow circuit for preheating. All components of the preheating loop are designed for 1150 psig 600°F and constructed of Type 304 stainless steel.

During the preheating phase of operation and to isolate the reactor vessel from the steam cycle in order to pressurize the reactor, the following must occur: 1) both reactor water-circulation and reactor water-purification pumps must be in service, 2) the reactor water-purification coolers must be by-passed, 3) the purification system filters and ion exchangers must be isolated, and 4) the 11 superheated-steam and feedwater stop valves must be closed. In order to carry out the preheating, the following valves shown on Fig. 401-1 must be in the position designated to circulate the water through the preheater:

—Valve MOV-13	Closed	Schematic Control diagrams shown in Section 405. Ref. Fig. 404-2
—Valve MOV-14	Open	
—Valve MOV-15	Open	
—Valve MOV-18	Closed	
—Valve MOV-20	Open	
—Valve MOV-22	Open	
—Valve 43 Secondary cooler inlet	Closed	
—Valve 43 Secondary cooler bypass	Open	
—Valve 43A Preheater inlet	Open	

—Valves 43A Purification Pump Inlets — Open (2 valves)
—Valves 121 Purification Pump Outlets — Open (2 valves)
—Valve 107 Purification Circuit Inlet — Closed

All of the above motor-operated valves are controlled from the control room; the Manual Valves located in the shielded compartment are accessible during the preheating stage, since the reactor is not in operation during this time.

As the water temperature is progressively increased by circulation through the preheater, the pressure in the vessel will gradually build up to 950 psig. The electric heater plus the reactor circulation pumps are capable of warming the reactor system at an initial rate of approximately 76°F/hr. Normally, enough heat will be added by fission product decay to increase the initial warm-up rate to 95°F/hr. As warm-up proceeds, the level of water in the vessel is held constant by draining water to the main condenser. This reduces the mass of water in the reactor system enough to offset the increase in the specific heat of the reactor water with increasing temperature. The net result is that the warm-up rate will remain essentially constant with increasing temperature.

As the system approaches 230 psig (400°F), water is blown from the superheater assemblies and heating is continued until the system temperature approaches 525°F. At this point, the flow of steam to the main condenser is adjusted to hold the reactor pressure constant and the rate of condensate return is adjusted to hold reactor water level constant. With a steady flow of steam through the superheater, reactor startup operations can proceed. The preheater is turned off after the reactor is in operation and producing a significant amount of steam.

The operating characteristics of the preheater are shown in Table 404-1 for various system pressure levels.

Table 404-1 PREHEATER PERFORMANCE CHARACTERISTICS

System Pressure	Feedwater Return	Net System Steaming Rate*
950 psig	3.0×10^3 lb/hr at 101°F	3.0×10^3 lb/hr
	Zero	5.2×10^3 lb/hr
230 psig	3.0×10^3 lb/hr at 101°F	3.0×10^3 lb/hr
	Zero	4.1×10^3 lb/hr
10 psig	3.1×10^3 lb/hr at 101°F	3.1×10^3 lb/hr
	Zero	3.6×10^3 lb/hr

* Neglecting heat loss through insulation and heat produced by circulating pumps.

The preheater unit (Sweco Model 1-0-8C1H) is a horizontal shell and tube type exchanger with electrical resistance heater elements slip-fit-inserted within the tubes of the unit. The 495 stainless steel Type 304 5/8-in. OD x 17-BWG tubes are rolled and seal-welded into the 1-1/8-in. thick tube sheets spaced 6 ft, 4 in. apart at each end, and the tube sheets in turn are welded to the 21-5/8-in. ID, 7/8-in. shell wall. The tubes are designed to withstand at 600°F a collapse pressure of 1150 psig. The shell is protected against overpressure with a bolted bonnet-type relief valve which discharges to the condenser. The water to be heated enters through a 3-in. butt-weld nozzle in the bottom of the unit, flows essentially parallel to the tubes, and, as a steam-water mixture, leaves through a 4-in. nozzle at the top of the unit at the other end. At full-power rating of 1000 kw the corresponding thermal heat flux from the 488 sq ft of tube heating surface is 7000 Btu/(hr)(sq ft).

The individual 440-volt heater elements with Type 310 stainless sheath have an active heating length of 6 ft, and can be removed and replaced if necessary. The heaters are electrically grouped such that by closing various combinations of the three 3-pole disconnect switches (each individually rated at 1/6, 1/3, and 1/2 power) the power to the heater can be varied in six steps from 1/6th rating up to full power.

Automatic protection against operating the preheater with too low a flow is provided electrically by a flow switch in the inlet line to the preheater. If the flow is less than 100 gal/min the preheater cannot be started and will automatically cut out if the flow during operation drops below this level. Other electrical interlocks such as valve limits, heater overtemperature, and undervoltage which automatically trip out the preheater breaker mounted in the 440-volt switchgear cabinet, are shown on Fig. 404-1.

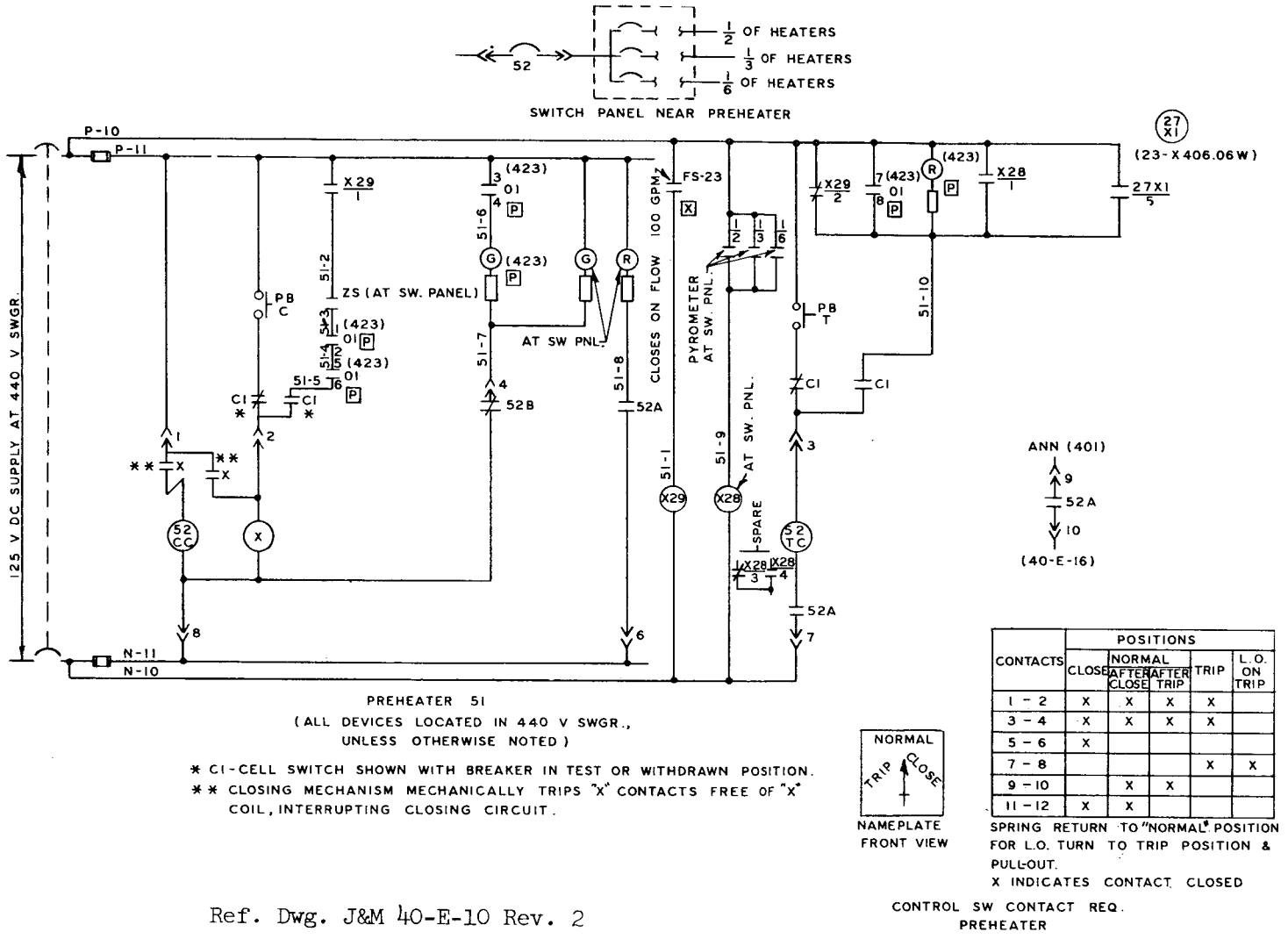

CONTACTS	POSITIONS				
	CLOSE	NORMAL AFTER CLOSE	NORMAL AFTER TRIP	TRIP	L.O. ON TRIP
1 - 2	X	X	X	X	
3 - 4	X	X	X	X	
5 - 6	X				
7 - 8				X	X
9 - 10		X	X		
11 - 12	X	X			

SPRING RETURN TO "NORMAL" POSITION FOR L.O. TURN TO TRIP POSITION & PULL-OUT.
X INDICATES CONTACT CLOSED

CONTROL SW CONTACT REQ. PREHEATER

Ref. Dwg. J&M 40-E-10 Rev. 2

Fig. 404-1 Schematic electric control diagram for reactor water preheater.

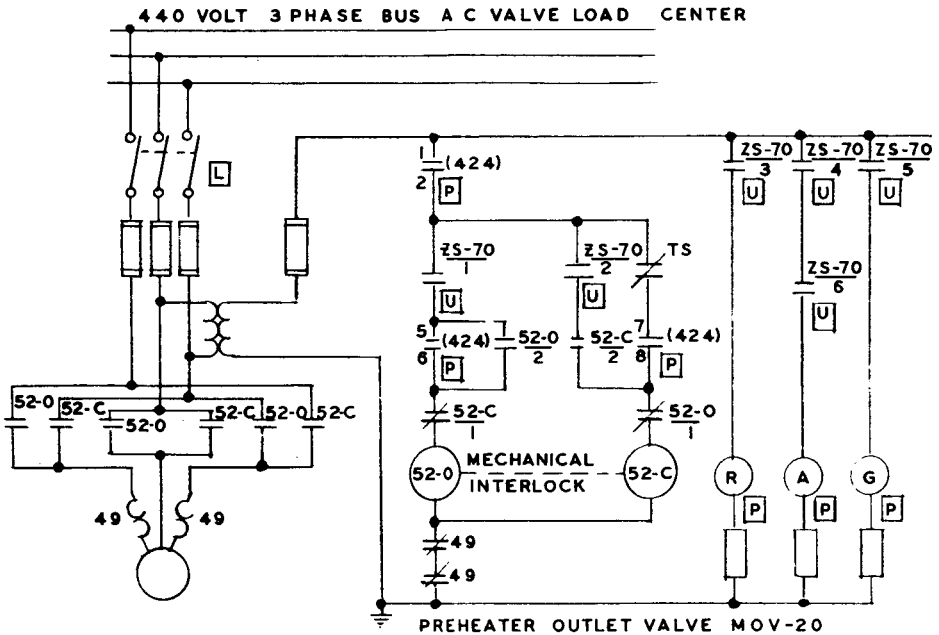

MOTOR OPERATED VALVE
POSITION SWITCH DEVELOPMENT

CONTACT	VALVE POSITION		
	FULLY OPEN	INTER	FULLY CLOSED
1		X	X
2	X	X	
3	X		
4			X
5		X	X
6	X	X	
7	X		
8			X
9	X	X	

"X" INDICATES CONTACTS CLOSED

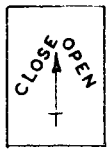

NAME PLATE
FRONT VIEW

MOTOR OPERATED VALVE MOV-20
CONTROL SWITCH DEVELOPMENT

CONTACTS	POSITIONS			
	OPEN	CENTER	L.O. ON CENTER	CLOSE
1 2	X	X		X
3 4	X	X		X
5 6	X			
7 8				X

SPRING RETURN TO CENTER
FOR L.O. TURN TO CENTER
AND PULL OUT.

LEGEND

52 D – MOTOR OPEN STARTER
52 C – MOTOR CLOSED STARTER
49 – THERMAL OVERLOAD
ZS-70 – POSITION SWITCH
TS – TORQUE SWITCH
424 – MOV-20 MOTOR CONTROL SWITCH
[P] – MAIN PANEL LOCATION
[U] – VALVE LOCATION
[L] – LOAD CENTER LOCATION

Ref. Dwg. J&M 40-E-10 Rev. 2

Fig. 404-2 Schematic electric control diagram for preheater valve MOV-20.

405. REACTOR WATER PURIFICATION AND SHUTDOWN COOLING

The reactor water purification and shutdown cooling system is a dual-purpose system. During normal operation, it traps corrosion-product impurities which enter the reactor circulating water from the feedwater system, and, when the reactor is shutdown, it removes the decay heat generated by the reactor core and thus keeps the reactor water cool enough for fuel handling operations. As indicated in section 404, the purification system pumps are also used to force water through the reactor preheater during startup operations, and, when the seal water pump is not available, these pumps will supply seal injection water for the control-rod drives and the reactor water-circulation pumps as discussed in section 415.

The pumps, the secondary cooler, and a portion of the loop piping are made larger than purification requirements alone would dictate, to allow the system to be used for the multiple purposes mentioned above. The system components are shown on the flow diagram (refer to Fig. 401-1).

The system components and their functions are described in the subsections which follow. Subsection A describes the purification operation, and subsection B describes the shutdown cooling operation. Electrical control circuitry for this system is shown on Figs. 405-1 through 405-5.

A. Purification

A combination of ion exchange and filtration is used to remove the impurities from the reactor water. The normal flow rate for purification is 15 gpm, which is expected to maintain the total solids content of the reactor water at less than 1 ppm and keep the chloride ion concentration below 0.1 ppm. With this flow rate, approximately 80 per cent of the corrosion products released by "in-core" surfaces are expected to be trapped by the purification units.

Water to be purified is withdrawn from the 10-in. discharge line from reactor water-circulation pump No. 1, downstream of valve MOV-10 at 532 to 540°F. This water is cooled to 180°F as it passes through the tube side of the regenerative cooler and is further cooled from 180°F to 120°F as it is pumped through the tubes of the secondary cooler. From the secondary cooler the water flows through a prefilter, a demineralizer, and an afterfilter which remove all filterable suspended matter and ionic impurities from the stream. The purified water is reheated from 120°F to 487°F by passing it through the shell side of the regenerative cooler. The water is then returned to the 12-in. line leading to the suction of reactor water-circulation pump No. 1, upstream of valve MOV-9.

A settling chamber is provided in the pipe line which supplies water to the purification system. This chamber is expected to trap the larger particles of corrosion products carried by the water and thus reduce the accumulation of such material in the heat exchangers of the purification system. The settling chamber is a vertical section of 10-in. Schedule 100 pipe 4 ft, 2 in. long which is located in the reactor circulating pump room with the top outlet at elevation 24 ft, 0 in. Two 1-in. purge valves at the bottom of the chamber are provided for removal of accumulated crud.

For reliability and continuity of operation, duplicate units are provided for the purification pumps, prefilters, demineralizers, and afterfilters.

The major system components are described briefly in the paragraphs which follow.

The first heat exchanger in the purification loop is a regenerative unit, i.e., heat removed from the water that is flowing into the loop is transferred to the cold water that is returning from the loop to the reactor. The regenerative cooler (Southwestern Engineering Co. Model 626-252-71H) is a high-pressure horizontal shell and tube counterflow heat exchanger of all-welded Type 304 stainless-steel construction. The SA351-CF8 shell of the unit has welded shell and channel covers and is 21 ft, 7 in. long by 10-3/4 in. OD. The exchanger contains sixty-eight 5/8-in. OD, 15 BWG stainless-steel U-tubes made to ASTM Specification A 269-TP304. The U-tubes are rolled and welded to the 1-3/4-in. thick A 240 Type 304 tube sheet. The net effective heat-transfer area is 223 sq ft, and the design duty is 2.8×10^6 Btu/hr; both shell and tube sides are of two-pass design, and have design pressure and temperature ratings of 1150 psig and 575°F, respectively. The shell is protected against over-pressure by a 1-in. x 1-in. screwed, closed-bonnet safety valve Manning, Maxwell and Moore Consolidated No. 1975t, with a Type 316 stainless steel body. The tubes are designed to withstand 1150 psig external pressure at 525°F. The shell-side pressure drop is 8 psi, and the tube-side pressure drop is 2 psi with 7400 lb/hr rated flow through both shell and tubes. Empty weight of the unit is 2900 lb. The entire unit is designed to meet the requirements of Section VIII of the ASME Code and Code Case 1270N.

The two purification loop pumps (Bingham Pump Model 1-1/2 x 2 x 5-1/2 RV) are of the bottom suction, single-volute, single-stage, vertical centrifugal type with 2-in. suction and discharge nozzles. Refer to Fig. 405-6 for pump characteristic curves. All wetted parts are of stainless steel, and the casing is designed for 1200 psig and 600°F. Material for the casing and impeller conform to ASTM Specification A351-CF8, Class II x-ray. The impeller is overlaid with Colmonoy No. 6 at wear points. The pump shaft is Type 304 stainless with a 17-4 PH wear sleeve in the seal assembly. These pumps are designed to operate satisfactorily with the temperature of the water being pumped ranging from 180°F to 600°F. The pump shaft is equipped with a special mechanical shaft seal backed up

limit the loss of primary fluid if the mechanical seal fails. The normal seal leakage is guaranteed to be less than 1 gal/week. The seal is cooled by internal circulation of the water in the seal chamber, and requires no seal injection water. Heat from the seal assembly is removed by a 2 gal/min flow of auxiliary cooling water through a small stainless steel heat exchanger mounted on the pump. In addition, the seal housing is kept cool by circulating the auxiliary cooling water effluent from the seal heat exchanger through the pump cooling water jacket. The normal pressure drop for seal cooling water is 5 psig and with 540°F water in the pump the 2-gpm cooling water flow will maintain a seal chamber temperature of 105 to 110°F. Average heat leakage to the seal chamber with 540°F water in the pump is 5300 Btu/hr. The pump is driven at 3545 rpm by a 7-1/2-hp, 440-volt, 3-phase, squirrel cage induction motor (GE Model 5K4284 x J1E7) which is close-coupled directly to the pump. The motor is of NEMA Class B design with Class A insulation and has a service factor of 1.15. The radial and thrust ball bearings in the motor absorb all radial and thrust loads on the pump shaft and thus minimize loads on the seal housing. Since the pumps are located in a normally nonaccessible shield compartment with the regenerative and secondary coolers and preheater, the motor bearings are monitored by thermocouples and the bearing temperatures are measured on pyrometer-type temperature indicators mounted on the outside of the shield wall. These pumps develop 120 ft of head at a flow rate of 15 gal/min with 15 feet NPSH required. Pump head characteristics are dictated by the head required to force water through the purification equipment, and the pump capacity is determined by the flow required for shutdown cooling as discussed in the next section. For purification operation, only one pump at a time is used, and the discharge is throttled to give the desired 15 gal/min flow through the purification loop. A minimum flow of 10 gal/min is required through the pumps to prevent over-heating.

It should be noted that both the purification pumps and the reactor circulating pumps have stainless steel casings cooled by water which contains small quantities of chlorides. Although the stress levels in these parts are low, the pH of the cooling water supplied should be maintained at 10.5 to 11.0 to protect against stress corrosion and units should be inspected once each year for any indication of corrosion damage.

The power supply for the pumps is at motor control center No. 2 which is supplied with power by the diesel generator set in case normal station service power fails. The pumps are started and stopped and the flow is regulated from the control room. Figure 405-1 shows schematically the pump motor control circuit; Figs. 405-2 through 5 show the control circuitry for the motor-operated valves in the purification and shutdown cooling circuits. Operation of system controls is discussed at the end of this section.

The tube side of the secondary cooler receives the water leaving purification pumps at 15 gpm and reduces its temperature from 180 to 120°F. The heat removed from the tube side is absorbed by auxiliary

cooling water supplied to the shell side of this exchanger at a temperature of approximately 90°F and a flow rate approximately equal to the tube side flow rate. The size of the secondary cooler is determined by shutdown cooling requirements which are discussed later. The unit is a horizontal shell and tube exchanger (American Standard Type 1217 "EU") with bolted and gasketed channel and channel cover. The length of the unit between the end of the welded shell cover and the channel cover flange is 19 ft, 10-1/2 in. The outside shell diameter is 12-3/4 in. The cooler is of two-pass design on both shell and tube side; and has an effective heat transfer area of 485 sq ft. It weighs 3100 lb empty and 3900 lb full of water. The 141 U-tubes, 3/8 in. OD No. 18 BWG, are welded to the tube sheet. The tubes are 17 ft straight length with 9/16 in. triangular pitch. Both tubes and the 2-3/4-in. thick tube sheet are Inconel (ASTM B 163 and B 168) to prevent chloride stress-corrosion of parts exposed to the auxiliary cooling water. The cobalt content of Inconel used for this exchanger was limited to 1.4 wt.%. The flanged channel, with 4-in. butt-weld inlet and outlet nozzles, is Type 304 stainless steel (A 182-F 304) and the 12-in. Schedule 30 pipe shell, with the 4-in. Schedule 40 auxiliary cooling water nozzles, is of carbon steel (ASTM A53 - Gr B). The shell is designed for 75 psig and 300°F, and the tubes are designed for 1150 psig and 575°F. The gaskets between the shell and tube sheet and between the tube sheet and channel are 1/16 in. thick Type 304 stainless steel. This unit is constructed to meet the requirements of Section VIII of the ASME Code and Code Case 1270N with the tube side classed as a primary vessel and the shell side as a secondary vessel. Although this unit is normally bypassed during startup, the construction is such that no harm will be done to the unit if water at 540°F is accidentally admitted to the tubes with the shell side flooded provided the shell side valves are open and shell pressure does not exceed the 75 psig design pressure, the shell side relief valve set pressure. The tube side of the unit was helium leak tested at 15 psig in the shop with a maximum total leakage limit of 10^{-4} cc/sec and maximum single leak limit of 10^{-6} cc/sec of air at S.T.P.

In order to remove the 21-ft, 7-in. long, 2900-lb, regenerative cooler and the 17-ft, 6-in. long,1550-lb secondary bundle from the shielded purification compartment in which they are located, a local section in the south wall of the compartment is made of solid concrete block which can be removed for dismantling the exchangers.

The two 100 per cent capacity prefilters (Filterite Model 900710 Type 1.1LH30C-304-1F) are ASME code designed for 1150 psig and 140°F. Each filter pressure shell contains a removable filter cartridge assembly with three cellulose acetate filter elements wound on stainless-steel center cores. These filters are capable of removing particles as small as 5 microns, and will have a pressure drop of 2 psi when clean and approximately 30 psi at the end of life. The filter elements are capable of withstanding differential pressures as high as 180 psi without damage. Each filter assembly is equipped with a captive O-ring seal to minimize flow bypass around the filter, and is designed so it can be lifted vertically into a shielded waste transfer cask for disposal (see Section 414).

The filter pressure shell consists of a section of 3-in. Schedule 80 stainless-steel pipe (ASTM A 376 F304), approximately 4 ft long, with a cap at the bottom and a 1500-lb blind-flange closure at the top. It is designed for 1150 psig at 110°F in accordance with Section VIII of the ASME code and Code Case 1270N. The entire unit is encased in a lead shield, 4 in. thick, with an outer steel support casing 1/2 in. thick surrounding the lead. Lead shielding is also provided for the top cover flange, and special flange bolts are provided which can be removed from outside the lead shielding. Maximum radiation levels in the vicinity of these units are expected to approach 14 mrem/hr at 3 ft after long term operation of the plant. Radiation monitors with indicators and alarms are mounted on the prefilter, and also on the ion exchange column, for protection of operating personnel and to warn of build-up of the irradiated corrosion products collected in these units.

The reactor demineralizers are mixed-bed, non-regenerative units approximately 18 in. OD by 60 in. straight side of shell, manufactured by Hungerford and Terry, Inc. The demineralizer tanks have the same shielding thickness as the prefilters, and are designed for the same pressure and temperature. They are made of Type 304 stainless steel and are 20 in. OD by 5 ft, 6 in. long with 11/16 in. wall. Each demineralizer contains 7 cu ft of Rohm and Haas Amberlite XE-150 nuclear grade resin consisting of 16 to 50 mesh particles. The resin is held in two removable basket assemblies stacked one on top of the other to give a total bed depth of 4 ft, 4 in. The baskets are approximately 1 foot, 5 in. ID with 1/16 in. walls, and have 50-mesh stainless-steel screen covering the top and bottom. A captive O-ring seal is provided at the top of each basket to prevent water from by-passing the resin bed. Each basket has a lifting fitting on the top for use in pulling it up into a waste transfer cask. It is not expected to be feasible to regenerate these resins due to the high activity caused by radioactive corrosion products such as Ta^{182}, Co^{58}, Co^{60}, and Mn^{59}.

The total exchanger capacity of each demineralizer will be 84 kilograins as calcium carbonate. With an influent solids content of 1 ppm, these demineralizers are guaranteed to remove at least 90 per cent of the influent ionic constituents. The conductivity of the reactor water entering and leaving the reactor purification system is measured and recorded in the control room.

The afterfilters are identical to the prefilters, and trap any resin fines which escape from the reactor demineralizers.

The motor-operated valves indicated on the flow diagram are all remotely operated from the main control panel. Motor operators have been provided on all isolation valves between the purification system and the reactor system and on certain key valves which need to be under direct control of the reactor operator during startup and shutdown operations. Each motor-operated valve is also provided with a local handwheel manual control to permit emergency operation in case of power failure.

The purification pump control switches and necessary indicating lights are also located on Section F of the main control panel. Interlocks are provided in the pump control circuits to turn off the pumps in case of thermal overload of the motor or in case the temperature of the water in the purification loop exceeds 140°F.

The purification system is also interlocked with the poison injection system so that when poison injection is initiated, the flow of water through purification is stopped by automatic closure of valve MOV-18 and the purification pumps are automatically turned off. This is done to prevent the poison from being drawn into the purification loop if the main reactor circulating pumps are not running at the time poison is injected.

Standard process instrumentation for flow, temperature, etc., is provided for this system as indicated in the flow diagram. All components or the purification and shutdown loop are fabricated of stainless steel Type 304; the system piping and components are designed for 1150 psig and 600°F.

B. Shutdown Cooling

Initial cooling to a temperature of 212 to 250°F and depressurization will be accomplished by flashing steam from the reactor to the main condenser. Once this initial cooling has been completed, the superheater fuel assemblies will be flooded with water, and all further cooling will be accomplished by using the secondary cooler.

To obtain the desired shutdown cooling capacity, the valve at the inlet to the tube side of the regenerative cooler (MOV-13) is to be closed, and the 4-in. bypass line around the cooler is to be opened with valve MOV-14. Valves at the inlet and outlet of both pumps are opened to permit the use of both purification pumps in parallel. The inlet valves to the reactor prefilters will also be closed, and the purification loop bypass line will be opened by opening valves MOV-22 and MOV-18. This will permit reactor water to be pumped directly through the tube side of the secondary cooler and back to the reactor vessel via the purification return line.

With the valve arrangement described above, the secondary cooler will operate at a flow rate of 8.5×10^4 lb/hr (approximately 170 gal/min) of reactor water through the tubes when both pumps are in operation. A like amount of auxiliary cooling water at approximately 90°F will be supplied to the shell of the secondary cooler by opening valve MOV-15, the control circuitry of which is shown in Fig. 405-5. Pressure drop through the tube side of the secondary cooler at 8.5×10^4 lb/hr is 15 psi and for the shell side it is 10 psi. Under these conditions, the cooler will remove heat from the reactor water at a rate of 1.7×10^6 Btu/hr (equivalent to 1 per cent of full reactor power) while maintaining the reactor water at a temperature of 120°F or less. Since

the mean temperature difference at the design conditions described above is only $10^{o}F$, the rate of heat removal will be considerably greater than 1.7×10^{6} Btu/hr as long as the reactor water temperature exceeds $120^{o}F$. This will permit a relatively rapid removal of stored heat from the reactor system in the early stages of cool-down. The rate of cool-down may be controlled by throttling the flow of reactor water with valve MOV-18. Once the reactor water has been cooled to less than $140^{o}F$, some water can be admitted to the purification units if water cleanup is desired during fuel unloading operations.

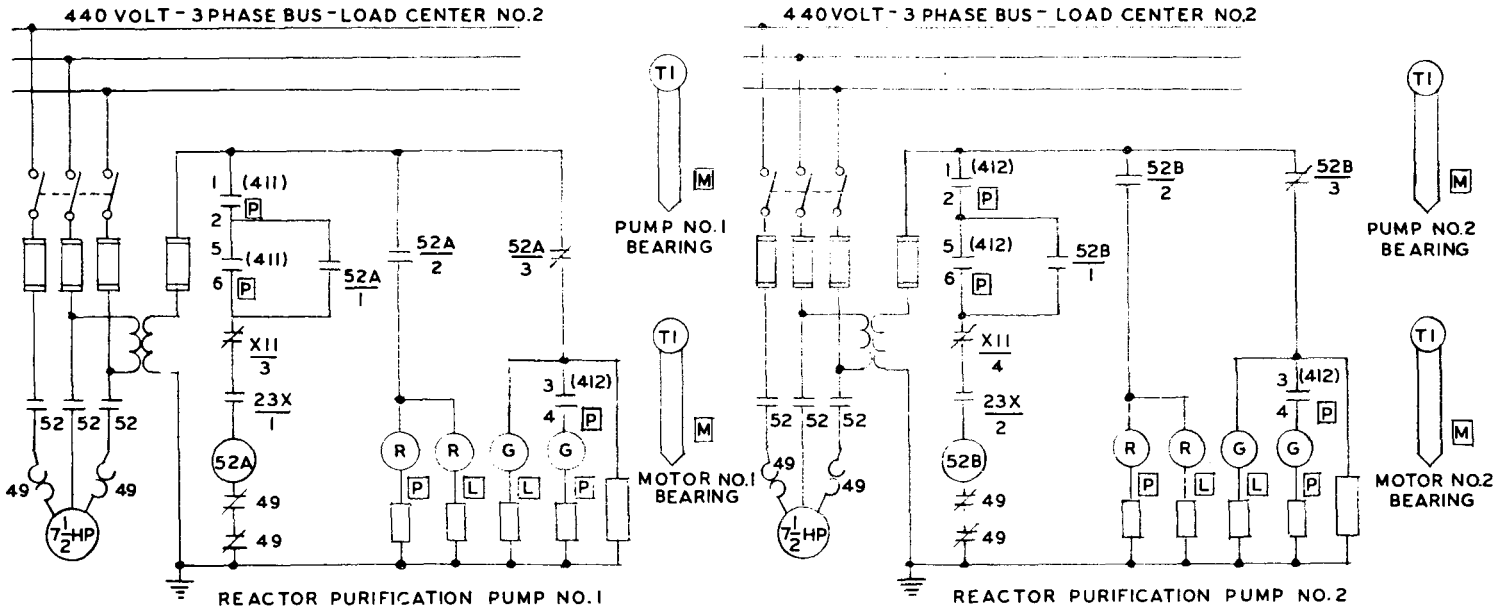

411&412 SWITCH DEVELOPMENT

CONTACTS	POSITIONS			
	START	CENTER	STOP	L.O. ON STOP
1 - 2	X	X		
3 - 4	X	X	X	
5 - 6	X			
7 - 8	X	X		

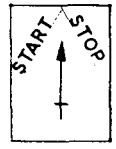

NAME PLATE FRONT VIEW

SPRING RETURN TO CENTER FOR LO TURN TO STOP AND PULL OUT

X INDICATES CONTACTS CLOSED

411 - PURIFICATION PUMP NO.1 CONTROL SWITCH
412 - PURIFICATION PUMP NO.2 CONTROL SWITCH
52A - PUMP NO.1 MOTOR STARTER
52B - PUMP NO.2 MOTOR STARTER
X11 - POISON INJECTION SYSTEM INTERLOCK
23X - PURIFICATION WATER TEMPERATURE INTERLOCK
49 - THERMAL OVERLOAD
[P] - MAIN CONTROL PANEL LOCATION
[L] - LOAD CENTER LOCATION
TI - TEMPERATURE INDICATOR
[M] - MOTOR LOCATION

Ref. Dwg. J&M 40-E-11 Rev. 3

Fig. 405-1 Schematic electrical control diagram for reactor purification system pumps.

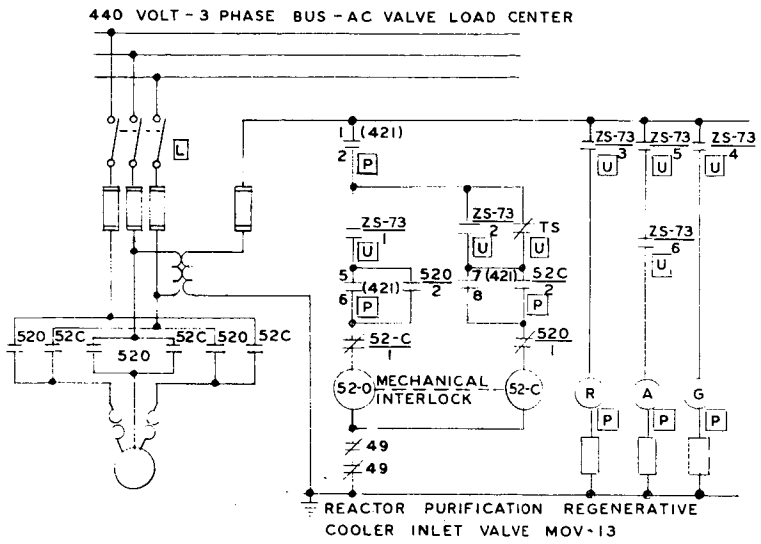

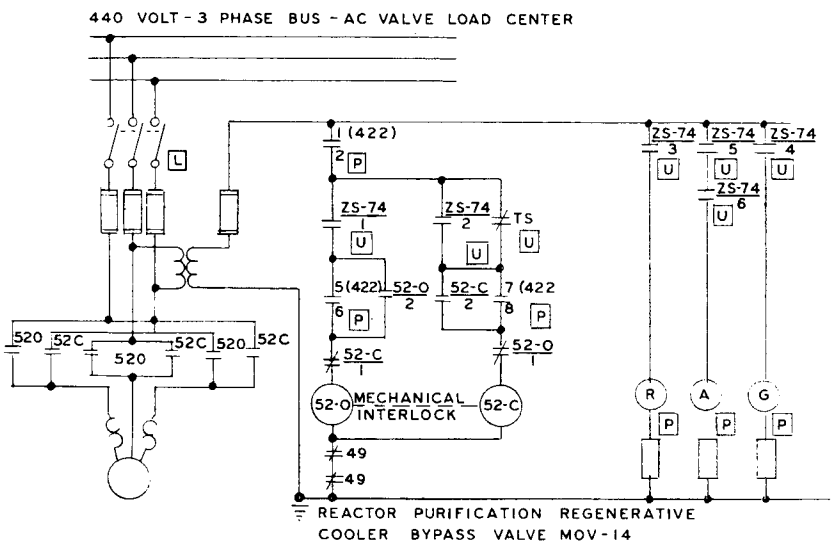

MOTOR OPERATED VALVE 13 & 14
POSITION SWITCH DEVELOPMENT

CONTACT	VALVE POSITION		
	FULLY OPEN	INTER	FULLY CLOSED
1		X	X
2	X	X	
3	X		
4			X
5		X	X
6	X	X	
7	X		
8			X
9		X	X

X INDICATES CONTACTS CLOSED



NAME PLATE
FRONT VIEW

CONTACTS	POSITIONS			
	OPEN	CENTER	L.O. ON CENTER	CLOSE
1 — 2	X	X		X
3 — 4	X	X		X
5 — 6	X			
7 — 8				X

SPRING RETURN TO CENTER
FOR LOCKOUT TURN TO
CENTER AND PULL OUT

LEGEND

52-O — MOTOR OPEN STARTER
52-C — MOTOR CLOSED STARTER
49 — THERMAL OVERLOAD
ZS-73 — POSITION SWITCH
ZS-74 — POSITION SWITCH
TS — TORQUE SWITCH
421 — MOV-13 MOTOR CONTROL SWITCH
422 — MOV-14 MOTOR CONTROL SWITCH
[P] — MAIN PANEL LOCATION
[U] — VALVE LOCATION
[L] — LOAD CENTER LOCATION

Ref. Dwg. J&M 40-E-11 Rev. 3

Fig. 405-2 Schematic electrical control diagram for the regenerative cooler inlet and bypass motor-operated valves.

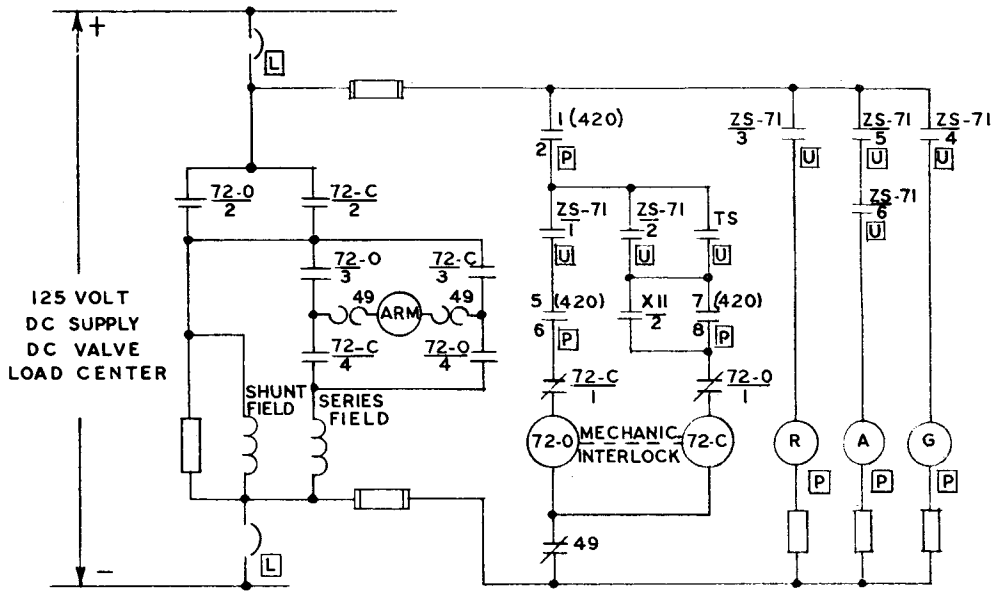

MOTOR OPERATED VALVE
POSITION SWITCH DEVELOPMENT

CONTACTS	VALVE POSITION		
	FULLY OPEN	INTER	FULLY CLOSED
1		X	X
2	X	X	
3	X		
4			X
5		X	X
6	X	X	
7	X		
8			X
9	X	X	
10		X	X

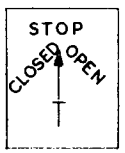

NAMEPLATE
FRONT VIEW

MOTOR OPERATED VALVE NO.18
CONTROL SWITCH DEVELOPMENT

CONTACTS	POSITIONS			
	OPEN	STOP	L.O. ON STOP	CLOSE
1-2	X	X		X
3-4	X	X		X
5-6	X			
7-8				X

SPRING RETURN TO STOP.
FOR L.O. TURN TO STOP AND PULL OUT.
X INDICATES CONTACT CLOSED

LEGEND

72-O	MOTOR OPEN STARTER
72-C	MOTOR CLOSED STARTER
49	THERMAL OVERLOAD
ZS-71	POSITION SWITCH
TS	TORQUE SWITCH
420	MOV-18 CONTROL SWITCH
P	MAIN PANEL LOCATION
L	LOAD CENTER LOCATION
U	VALVE LOCATION
XII	POISON INJECTION VALVE INTERLOCK

Ref. Dwg. J&M 40-E-10 Rev. 2

Fig. 405-3 Schematic electrical control diagram for the reactor purification system motor-operated return valves.

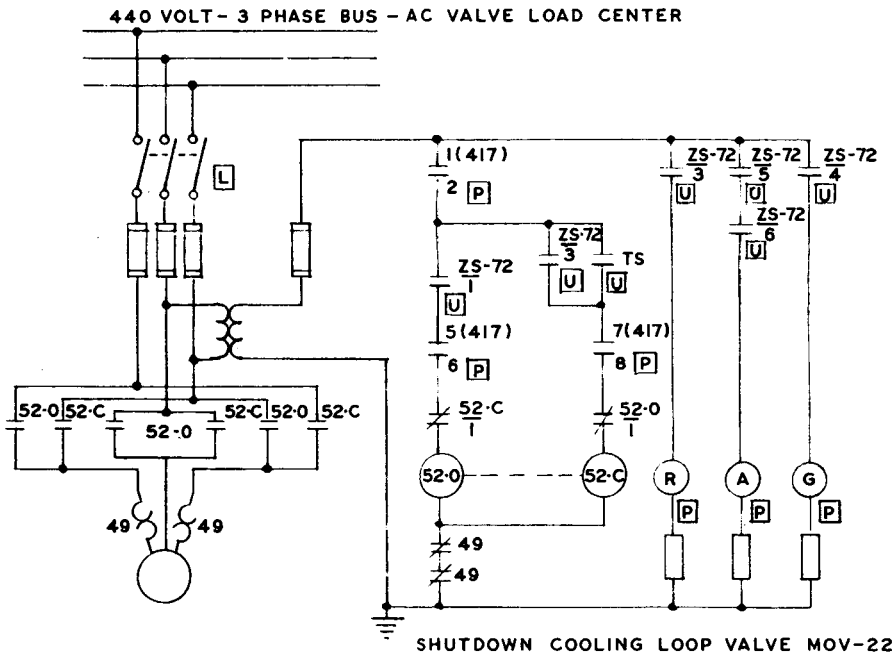

MOTOR OPERATED VALVE
POSITION SWITCH DEVELOPMENT

CONTACT	VALVE POSITION		
	FULLY OPEN	INTER	FULLY CLOSED
1		X	X
2	X	X	
3	X		
4			X
5			X
6	X	X	
7	X		
8			X
9		X	X

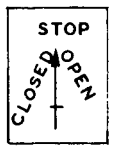

NAMEPLATE
FRONT VIEW

MOTOR OPERATED VALVE NO.22
CONTROL SWITCH DEVELOPMENT

CONTACTS	POSITIONS			
	OPEN	STOP	L.O. ON STOP	CLOSE
1 - 2	X	X		X
3 - 4	X	X		X
5 - 6	X			
7 - 8				X

SPRING RETURN TO STOP.
FOR L.O. TURN TO STOP
AND PULL-OUT

LEGEND

52-0	MOTOR OPEN STARTER
52-C	MOTOR CLOSED STARTER
49	THERMAL OVERLOAD
ZS	POSITION SWITCH
TS	TORQUE SWITCH
417	MOV 22 MOTOR CONTROL SWITCH
P	MAIN PANEL LOCATION
U	VALVE LOCATION
L	LOAD CENTER LOCATION

Ref. Dwg. J&M 40-E-11 Rev. 3

Fig. 405-4 Schematic electrical control diagram for the shutdown cooling and preheating motor-operated valve MOV-22.

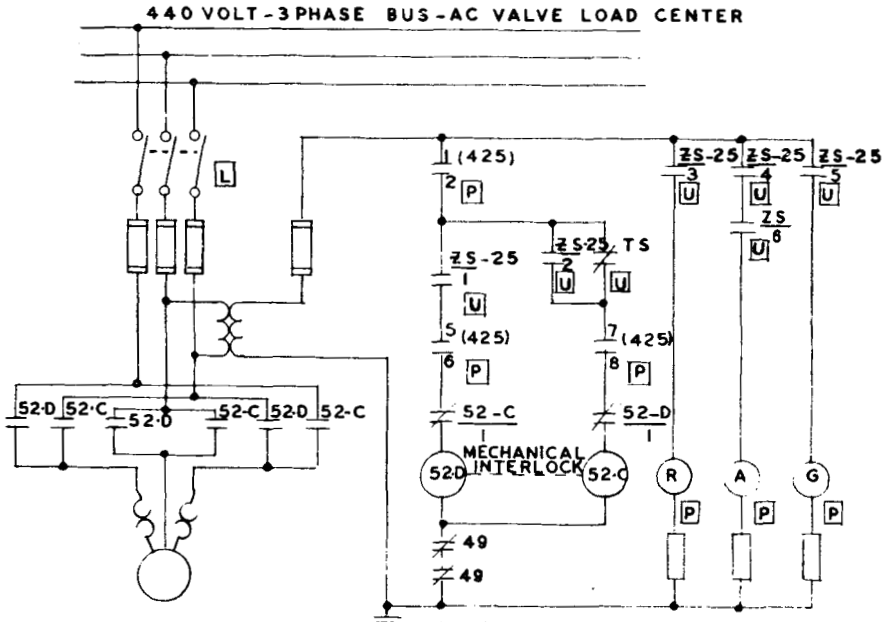

MOTOR OPERATED VALVE
POSITION SWITCH DEVELOPMENT

CONTACT	VALVE POSITION		
	FULLY OPEN	INTER	FULLY CLOSED
1		X	X
2	X	X	
3	X		
4			X
5		X	X
6	X	X	
7	X		
8			X
9		X	X



NAME PLATE
FRONT VIEW

CONTACTS	POSITIONS			
	OPEN	CENTER	L.O. ON CENTER	CLOSE
1 – 2	X	X		X
3 – 4	X	X		X
5 – 6	X			
7 – 8				X

SPRING RETURN TO STOP
FOR LOCKOUT TURN TO
CENTER AND PULL OUT.

"X" INDICATES CONTACTS CLOSED

LEGEND

52-D	MOTOR OPEN STARTER
52-C	MOTOR CLOSE STARTER
49	THERMAL OVERLOAD
ZS-25	POSITION SWITCH
TS	TORQUE SWITCH
425	MOV-15 MOTOR CONTROL SWITCH
[P]	MAIN CONTROL PANEL
[U]	VALVE LOCATION
[L]	LOAD CENTER LOCATION

Ref. Dwg. J&M 40-E-11 Rev. 3

Fig. 405-5 Schematic electrical control diagram for the secondary cooler auxiliary cooling water motor-operated valve MOV-15.

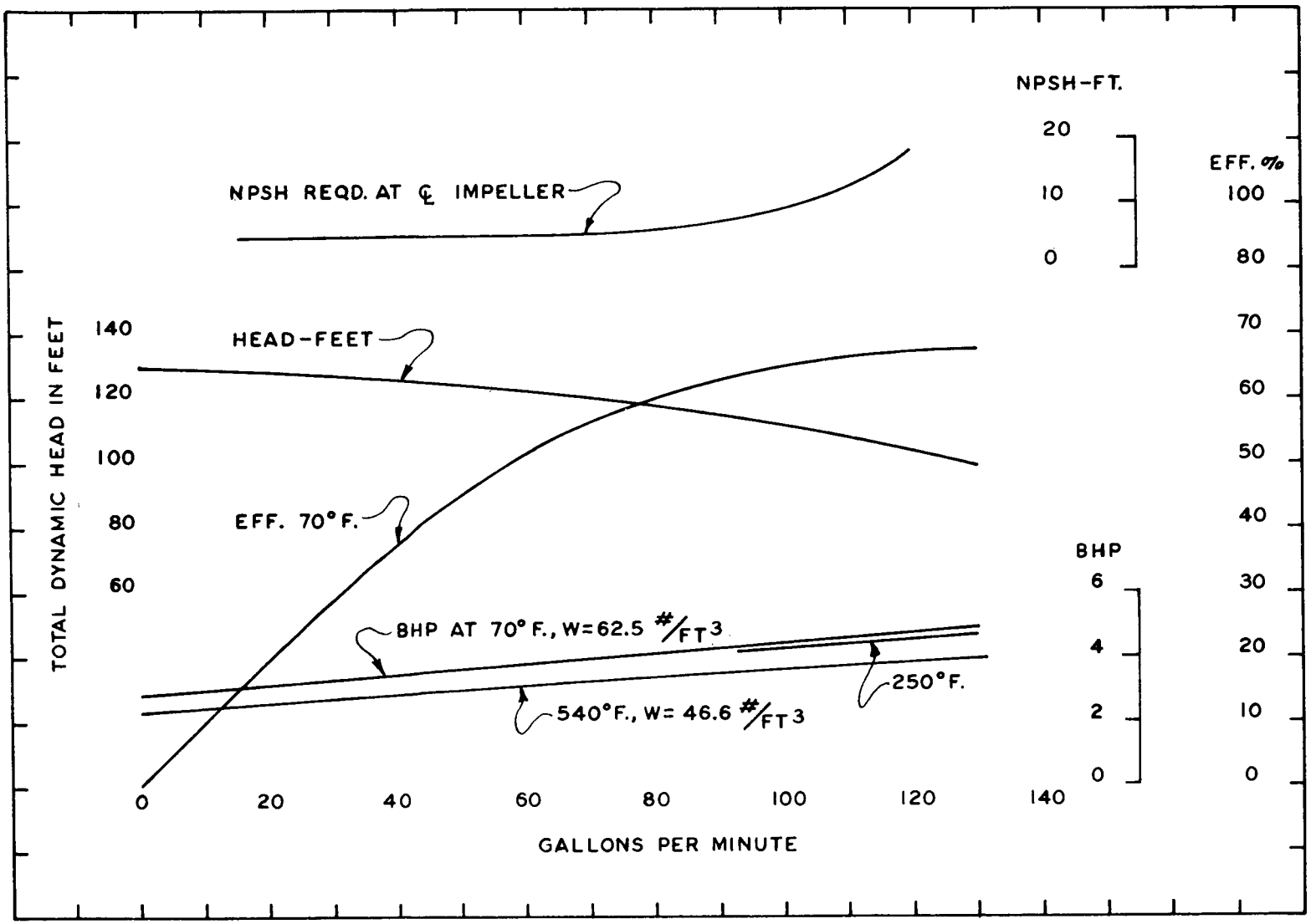

Reference Bingham Pump Co. Curve No. 19141

Fig. 405-6 Reactor purification pump performance curves.

406. SHIELD COOLING

A closed water-circulation loop is used to cool the following: 1) the neutron shield tank which surrounds the pressure vessel 2) the bottom shield plug and 3) the mortared concrete block tunnel portions of the concrete biological shield above the neutron shield tank. The loop consists of the surge tank, the shield tank, pumps, filters, and cooling coils embedded in the concrete biological shield. The loop flow diagram is shown in Fig. 406-1.

Cooling coils are shown schematically on Fig. 406-2, and are located above and below the piping in the north and south tunnels, around the upper and lower cylindrical shell structures, around the conical apron structure, and around the reactor water-circulation pipes, and are embedded in the lead of the reactor bottom shield plug. The cooling coils in the upper shield structure are fabricated from 3/4-in. Schedule 80 pipe and from ASTM A106 Gr A pipe; the cooling coils in the bottom shield plug are 3/4-in. 1/8-in.-wall copper tubing. Spare coils are provided in all cases where coils are embedded in concrete or lead; these extra coils are capped. The total water flow to the cooling coils and reactor shield tank is 45 gpm. The maximum water temperature rise is 9°F. Maximum concrete temperature at any point is 180°F. The flow to each of the respective cooling coils is to be adjusted by means of the valves in the respective circuits; the adjustment equalizes the temperature rise in all circuits.

If necessary, the shield cooling system will be protected against corrosion by the introduction of corrosion-inhibiting chemicals into the surge tank. Circulating corrosion products are removed by the filters.

Two filters and two pumps are provided to allow continuous operation; only one unit is normally in service, and the other unit serves as a standby. The disposable filter cartridges are Filterite Corp. Model 9MR3-2FOL cellulose acetate wound on stainless-steel cores; the cartridges will remove particles of 5-micron size or larger. The pressure is measured both at the inlet end and at the outlet end of the filters; the cartridges will be changed when the pressure drop across the filters exceeds 30 psi.

The shield cooling water pumps (Ingersoll Rand Model 1-1/2 RV-3) are horizontal-shaft, single-stage centrifugal units, each having a close-coupled motor mounted on an integral base plate. Each pump is 100 per cent capacity; therefore, only one pump is operated at any time. Pumps are of standard design and construction with cast iron casing, with steel shaft, bronze impeller, and with bronze shaft sleeve and casing ring and packed-type stuffing box. Motors are 3-hp, 440-volt, 3-phase, squirrel-cage induction. The power to the pumps is supplied from motor control center No. 2, and each pump is started locally at the unit. On loss of normal power, the "running" pump will automatically

restart on restoration of power from the diesel generator. Figure 406-3 shows schematically the pump electrical control circuit. The control station for inlet cooling water regulation of flow circuits to the bottom shield plug, is located outside the reactor water-circulation pump room at elevation 16 ft, 0 in.; the temperature and sight flow indicators for these circuits are located across the aisle on the outside of the waste evaporation compartment. The control station with the regulating valves, the temperature and sight flow indicators for the cooling circuits above the neutron shield tank, and the neutron shield is located at the reactor floor level of 68 ft, 0 in.

The 200-gal capacity 2-1/2-ft-dia. surge tank located at platform elevation 74 ft, 0 in., is an ASME code-stamped vessel designed for 50 psig, and is constructed of mild-steel plate; standard carbon-steel piping is used with the tank.

The heat exchanger (American Standard Industrial Division Model No. 610 "CP") is a horizontal straight-tube counter-flow unit with arsenical admiralty metal tubes, with a Muntz-metal-tube-sheet carbon-steel shell, with steel channels and channel covers, and with brass baffles. The total exchange area is 75 square feet. The heat exchanger is designed to transfer 198,000 Btu/hr and to cool 45 gpm of water from 109 to 100°F. The cooling water, at 90°F, flows at the rate of 45 gpm. Design pressure for both the shell side and the tube side is 75 psi at 300°F. The water level in the surge tank is normally maintained at an elevation of approximately 80 ft, 0 in. The surge tank is filled with demineralized water; the local water level indicator is used as a guide during the filling process which is accomplished locally at the tank. High- and low-level switches mounted on the tank initiate annunciation in the control room if the water level is outside the prescribed limits. If the tank is overfilled, the overflow will drain to the liquid waste retention tanks.

Shield cooling system piping is class 125 (see Fig. 400.1-3). This class piping uses carbon steel Schedule 80 seamless pipe (ASTM A53 Gr B), malleable iron fittings, and bronze valves for the size piping used in the shield cooling system.

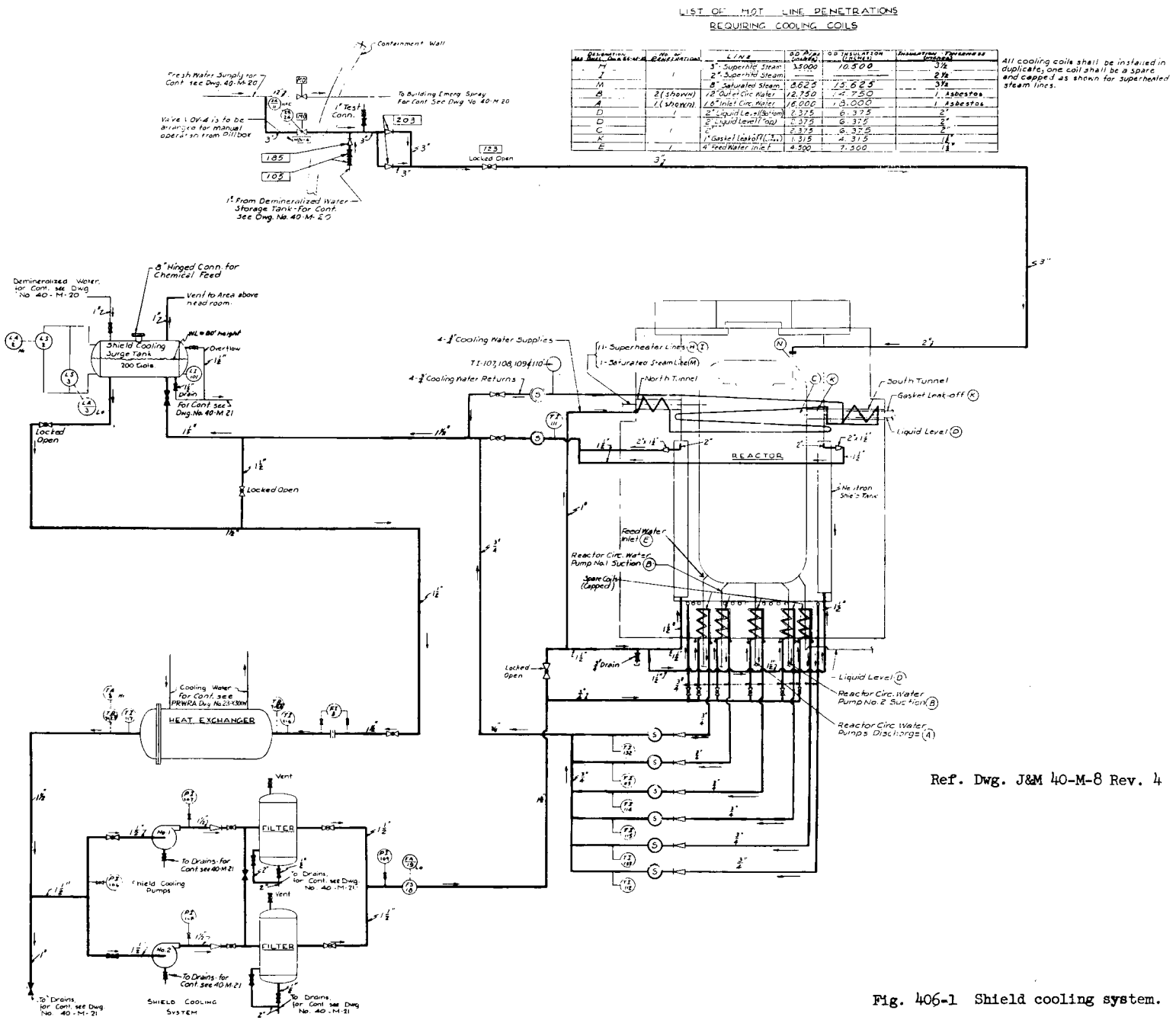

Designation (as shown on Dwg. No. 40-M-8)	No. of Penetrations	Line	O.D. Pipe (inches)	O.D. Insulation (inches)	Insulation Thickness
M	1	3" Superht. Steam	3.5000	10.500	3½
I		2" Superhtd Steam			2½
M		8" Saturated Steam	8.625	15.625	3½
B	2 (shown)	12" Outlet Circ Water	12.750	14.750	1 Asbestos
A	1 (shown)	18" Inlet Circ. Water	18.000	19.000	1 Asbestos
D	1	2" Liquid Level (Bottom)	2.375	6.375	2"
D		2" Liquid Level (Top)	2.375	6.375	2"
C	1	2"	2.375	6.375	2"
K		1" Gasket Leakoff (Inner)	1.315	4.315	1½"
E	1	4" Feed Water Inlet	4.500	7.500	1½"

Ref. Dwg. J&M 40-M-8 Rev. 4

Fig. 406-1 Shield cooling system.

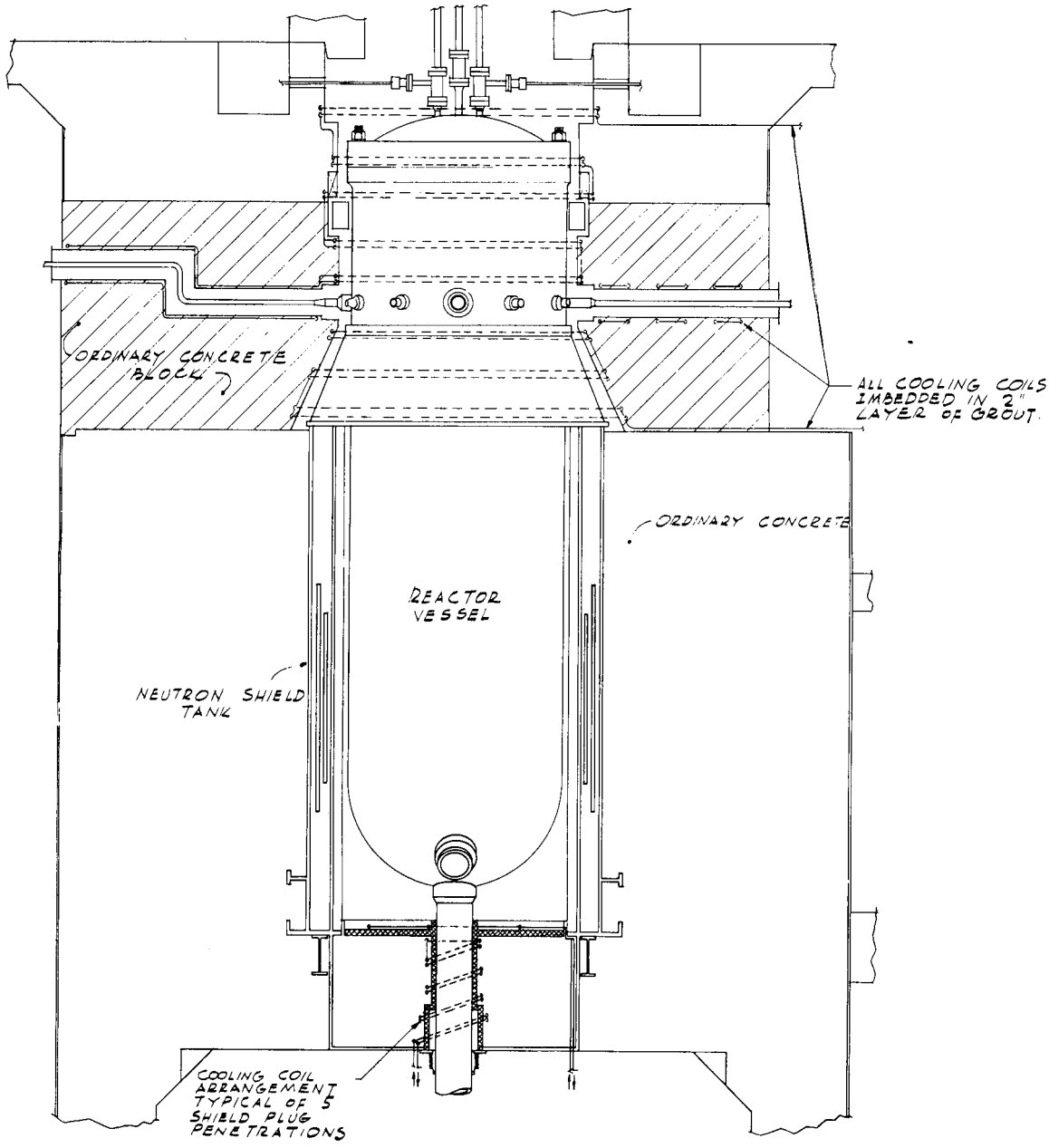

Ref. Dwg. GNEC 66-M-101 thru 112

Fig. 406-2 Reactor shield cooling coil locations.

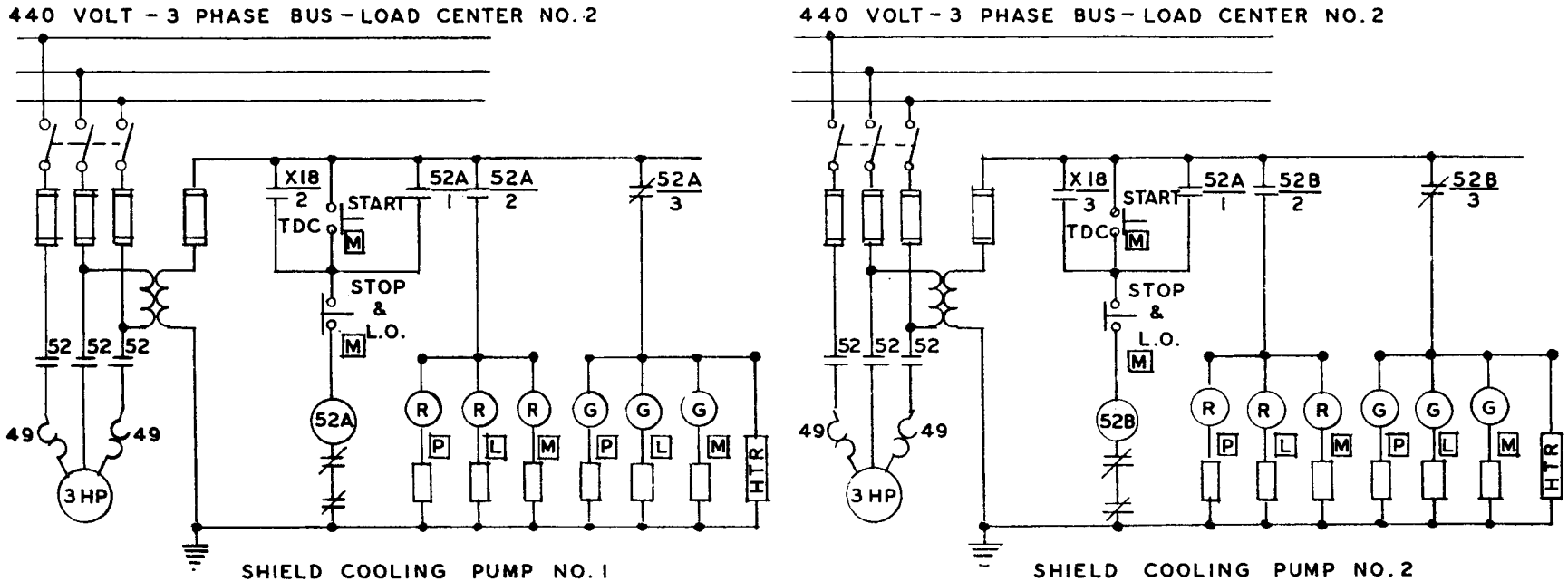

LEGEND

52A — PUMP NO. 1 MOTOR STARTER
52B — PUMP NO. 2 MOTOR STARTER
49 — THERMAL OVERLOAD
X18-TDC — TIME DELAY CLOSING (20 SECONDS)
[P] — MAIN CONTROL PANEL LOCATION
[L] — LOAD CENTER LOCATION
[M] — MOTOR LOCATION

Ref. Dwg. J&M 40-E-11

Fig. 406-3 Schematic diagram of shield cooling control.

407. FUEL HANDLING

A. General

The fuel management program for maintaining the reactivity of the core and obtaining uniform burnup of the fuel within the respective superheater and boiler fuel regions will involve periodic (9 month cycle) shifting of fuel within a region, removal of spent fuel elements which have been irradiated to an average 10,000 Mwd/ton exposure, replacement with new fuel assemblies, rotation of the superheater fuel assemblies, and removal and replacement of the poison shims in the two zones. Prior to carrying out the fuel handling operations the reactor vessel is filled with cold water, the top shield structures and pressure vessel cover flange are removed and the rotating shield plug installed in position above the vessel. The handling of the irradiated fuel and other core components when the reactor is shutdown is accomplished with the motor driven, carriage-mounted fuel coffin. This unit travels between the reactor and the fuel storage pool. The pool contains racks for accommodating irradiated fuel assemblies. Figure 407-1 shows vertical elevation views of the fuel coffin and carriage assembly, Fig. 407-2 the schematic control circuitry for the various motor drives and protective devices, and Fig. 407-3, the movable coffin in place over the reactor during refueling operations.

B. Fuel Coffin and Carriage Structure

The fuel coffin and carriage assembly shown on Fig. 407-1 consists of a lead shielded, water cooled, coffin mounted on jacks on a motor driven trolley carriage atop a movable motor driven bridge structure. The coffin consists of an outer welded steel shell made up of three stepped cylindrical sections of 3/8-in. thick plate, a central 14-1/2 ID, 3/8-in. wall, stainless-steel liner, the lead filled annulus between the shell and liner, a top shield plug on which the fuel lifting winch is mounted and a bottom motor driven water-tight sliding shield door. The coffin is 21 ft, 8 in. high and the lead shield thickness in the lower 8-ft, 5-in. section is 11-3/4 inch. The liner in this lower section has anchored to it, on the lead side, a twin set of 1/2 in. OD, .062-in. wall, copper water cooling coils for removing decay heat from the contained fuel. In the 7-ft high central and 5-ft, 9-in. top sections the lead thicknesses are 4-1/2 inch and 1-3/4 inch respectively. A grating platform on the upper section permits manual adjustment of the rotatable top plug and hand operation of the winch unit.

The winch drives twin cables to which is attached at the lower end the fuel handling tool for engaging and lifting fuel. The lift speed is variable up to ten (10) fpm and the winch total travel of 40 ft is restricted by underload, overload, up-travel, and down-travel limit switches mounted on the top shield plug.

The trolley and bridge carriages are welded I-beam frame structures with integral 3/4-hp gear-motor driven wheels and electric brakes. The bridge rides on floor embedded rails and travels at a maximum rate of 9.5 fpm along the east-west axis between the reactor and fuel storage pool; the total travel distance, limited by the rail wheel stops, is 37 ft, 1 in. The trolley travel, at right angles to the bridge travel is 5 ft, 8-1/2 in., and the trolley speed in both the north and south directions is 6.3 ft/min. Trolley and bridge operation is automatically prevented if the coffin bottom is below elevation 68 ft, 4 in. The vertical motion of the coffin, over a height of 27-1/2 in., and lift rate of 12 in./min, are accomplished with four 15-ton capacity, geared jack screws driven by a 7-1/2-hp motor. The complete control of the coffin in three directions, and the operation of the bottom door and top mounted winch are from the control panel mounted on the trolley carriage. A supplementary pendant control station with 20 ft extension permits local winch control while observing the fuel lift process through a port in the rotating shield.

C. Rotating Shield Plug

The 17.1-ton, 12-in. thick, 9-ft, 4-in. dia. carbon steel (A235, Class A) rotating shield plug is shown in place over the reactor vessel shell flange during refueling operations in Fig. 407-3; the component parts of the assembly are shown in Fig. 407-4. The shield rests on a shoulder, 2 ft, 10 in. below the reactor floor level, in the steel lined 9 ft, 6 in. dia. opening above the vessel and is positioned by two removable steel dowel pins through the outer carrier ring. The rotating shield assembly is required to prevent high radiation levels in the area above the reactor during the withdrawal of spent boiler and superheater fuel from the core.

The rotating shield assembly consists of a fixed outer carrier ring containing a thrust bearing and the rotatable large plug carrier ring which has mounted within it the thrust bearing support for the rotatable small plug carrier ring. Two removable stepped steel plugs in the small plug carrier ring are provided for the removal of the boiler and superheater fuel assemblies. The port for removal of the boiler assemblies is 7 in. dia., and that for the superheater and control rods 15 in. dia. Two 7-in. dia. ports are also provided in the large plug carrier ring for entry of underwater lamps for general visual inspection of the core structure and inspection of fuel being withdrawn or replaced during the refueling operations.

Index marks are scribed on the large and small plug inner ring gears and there is a combination of index settings for each fuel assembly in the core. The positioning of the port over any fuel assembly to the desired index settings is done with a removable handwheel operated wrench by rotation of the respective pinion gears.

D. Fuel Handling Tool

The tool for gripping and lifting the boiler and superheater fuel assemblies is illustrated in Fig. 407-5. The fuel handling tool is

shown in the latched, engaged position (pawl pins extended) with respect to the fuel assembly top handling fitting. The handling tool is raised and lowered by two 5/32-in. diameter stainless-steel cables attached at the upper end to twin spools on the winch and at the lower end to diagonally opposed gussets on the head of the unit. A separate latching tool is required to latch and unlatch the fuel handling tool from the fuel assemblies; by a rotary motion of the latching tool relative to the actuator head the engagement pawls are extended and retracted. The latching tool is designed so that it can be engaged or disengaged only when the handling tool is latched to or unlatched from the fuel assembly thus eliminating the possibility of lifting a fuel assembly with the handling tool only partially engaged. An extension fitting, composed of two 5/32-in. diameter stainless-steel cables and a cross bar, is attached between the fuel handling tool and the winch cables when handling boiler fuel assemblies. The lengths of the extension cables are such that the cross bar will trip the up-travel limit switch in the coffin top plug when the fuel assembly is in the thick walled lower section of the coffin.

E. Fuel Storage Racks

The fuel storage racks are located in the bottom east end of the fuel storage pool as shown in Fig. 906-4. These racks, shown in Fig. 407-6 are "egg crate" type structures fabricated from 1/4 in. thick stainless steel plate. There are one hundred and twelve (112) 5-5/16 in. by 5-1/4 in. openings for boiler fuel assemblies and seventy (70) 5-1/4 in. by 10-1/16 in. openings for the superheater fuel assemblies. Along one axis of the racks every other baffle is only half-height and is made of 1/8 in. thick, one per cent boron-stainless steel sheet to prevent any possibility of achieving criticality in the stored fuel. Two fuel storage racks of different sizes are provided so that if more space is required in the storage pool for the fuel transfer cask, the smaller rack unit can be removed from the pool.

F. Fuel Handling

Irradiated fuel assemblies are removed from the vessel and transferred to the fuel storage pool in the following manner. The rotating shield is installed on the ledge provided in the upper biological shield as shown on Fig. 407-3. After the rotating shield port has been correctly positioned above the fuel assembly to be removed, the fuel assembly is prepared for unloading by removing the boiler holddown assembly in the case of the boiler assemblies, or by uncoupling the connector pipes in the case of the superheater assemblies. The coffin is then moved to a position to one side of the port, but not lowered on the rotating shield, and the bottom door in the coffin is opened. The fuel handling tool is lowered inside the coffin and guided by hand into latching position on the fuel assembly. The latching tool is manually inserted into the port engaging the handling tool and the latching to the fuel assembly made. The latching tool is then withdrawn.

The coffin is then moved directly over the fuel port, using the indexing strips on the bridge and trolley to accurately locate the fuel assembly. The coffin is lowered 26 inches in the trolley carriage frame with the motor-driven screw jacks, until it touches the upper surface of the rotating shield. Upon touching the shield, the coffin is automatically stopped by limit switches. The fuel assembly is then drawn up into the coffin with the twin stainless steel cables by the winch mounted on the top plug of the coffin. After the assembly is inside the coffin and stopped at the proper elevation by a limit switch, the lower door is closed and sealed, and cooling water is circulated in the copper cooling tubes in the coffin. Hoses are coupled to the coffin upper and lower coolant inlets, and demineralized water supplied to the coffin until the fuel assembly is submerged.

The coffin is then raised 26 inches to the carry position, 4 inches above the reactor platform, and moved from the reactor to the loading chute at the west end of the fuel storage pool described in section 906-C. It is then lowered 15 inches into the recess in the loading chute until it bottoms. The sliding plug is then cracked open discharging the contained water into the fuel storage pool and when the coffin is fully drained, the door is fully opened. The fuel assembly is lowered into the pool through the 16-in. diameter opening in the chute. The coffin is raised 15 inches, moved south several inches and to the east so that the cables and fuel assembly are moved horizontally from the storage chute through the 17-1/2-in. wide L-shaped slot in the west end wall of the fuel storage pool. The coffin and fuel assembly are then moved to the desired position above the fuel storage rack and the assembly lowered into the rack. The handling tool is unlatched, withdrawn into the coffin, and the coffin-carriage returned to the reactor.

To reduce the length of the superheater fuel assemblies for shipment, the standpipes on the upper end have to be removed. To perform this operation the coffin-carriage is moved to a position above the fuel storage rack and the trolley indexed above the assembly to be shortened. The standpipe cutter is lowered into position with the lower cutter end near the fuel assembly-standpipe joint and the upper end attached to a pivot point mounted on the carriage trolley. The standpipe cutter, a commercial pipe cutter modified for remote operation, is oscillated about the standpipe until the extension pipe is severed. In the same manner the other standpipe is cut and the standpipe assembly is removed to one side of the storage pool. A modified handling tool capable of gripping the shortened superheater fuel assembly is used for additional handling of this fuel.

When stored fuel is to be shipped off site, a shipping cask is lowered into the reactor end of the fuel storage pool for underwater loading. After loading has been completed, the 60-ton polar gantry crane transfers the cask from the pool to a truck on the freight door access loading ramp in the basement.

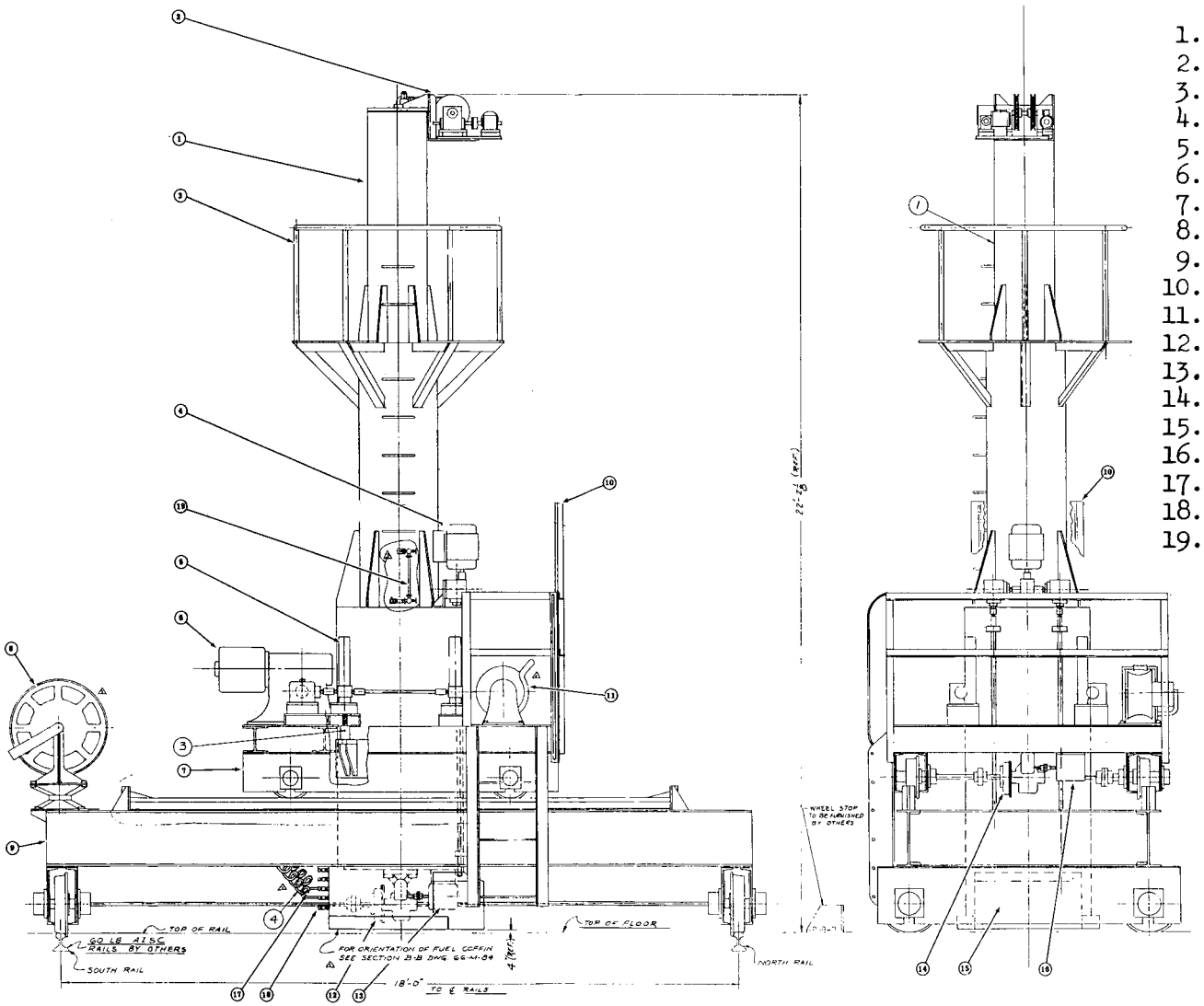

KEY

1. Coffin Shell
2. Winch
3. Catwalk
4. Sliding Plug Motor
5. Screw Jack
6. Coffin Motor
7. Carriage Trolley
8. Coffin Cooling Water Reel
9. Carriage Bridge
10. Control Panel
11. Electric Reel
12. Bridge Brake
13. Bridge Motor
14. Trolley Brake
15. Sliding Plug
16. Trolley Motor
17. Coffin Coolant Hoses
18. Fuel Assembly Coolant Water Inlet
19. Water Gage Glass

Ref. Dwg. 66-M-80 Rev. 2

Fig. 407-1 Fuel coffin and carriage.

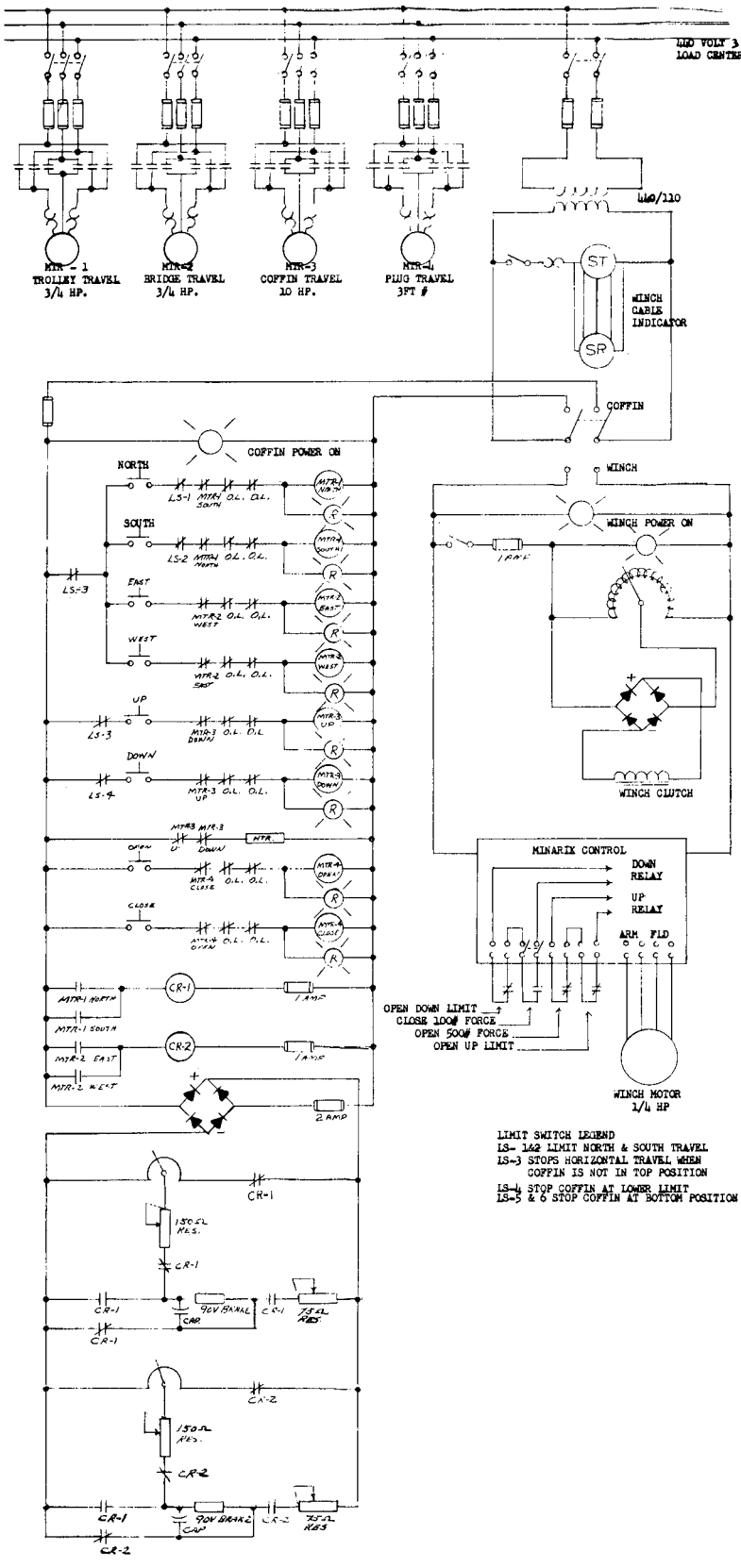

Ref. Dwg. Process Equipment Co. Dwg. 1849 Sh. 9, Rev. 5.

Fig. 407-2 Fuel coffin and carriage circuit diagram.

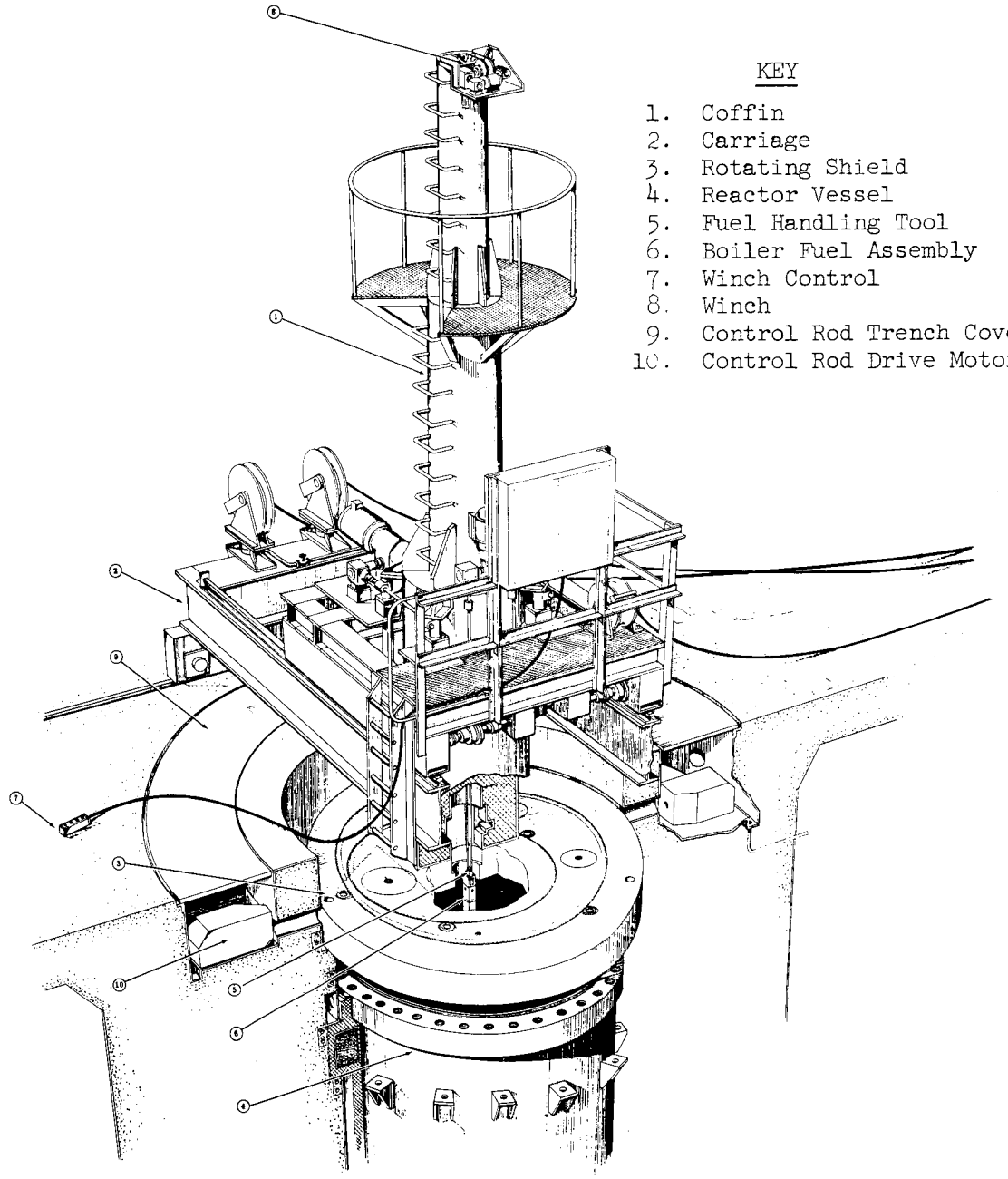

KEY

1. Coffin
2. Carriage
3. Rotating Shield
4. Reactor Vessel
5. Fuel Handling Tool
6. Boiler Fuel Assembly
7. Winch Control
8. Winch
9. Control Rod Trench Cover Plates
10. Control Rod Drive Motor

Ref. Dwg. GNEC 66-M-80

Fig. 407-3 Fuel coffin in place over reactor during refueling operations.

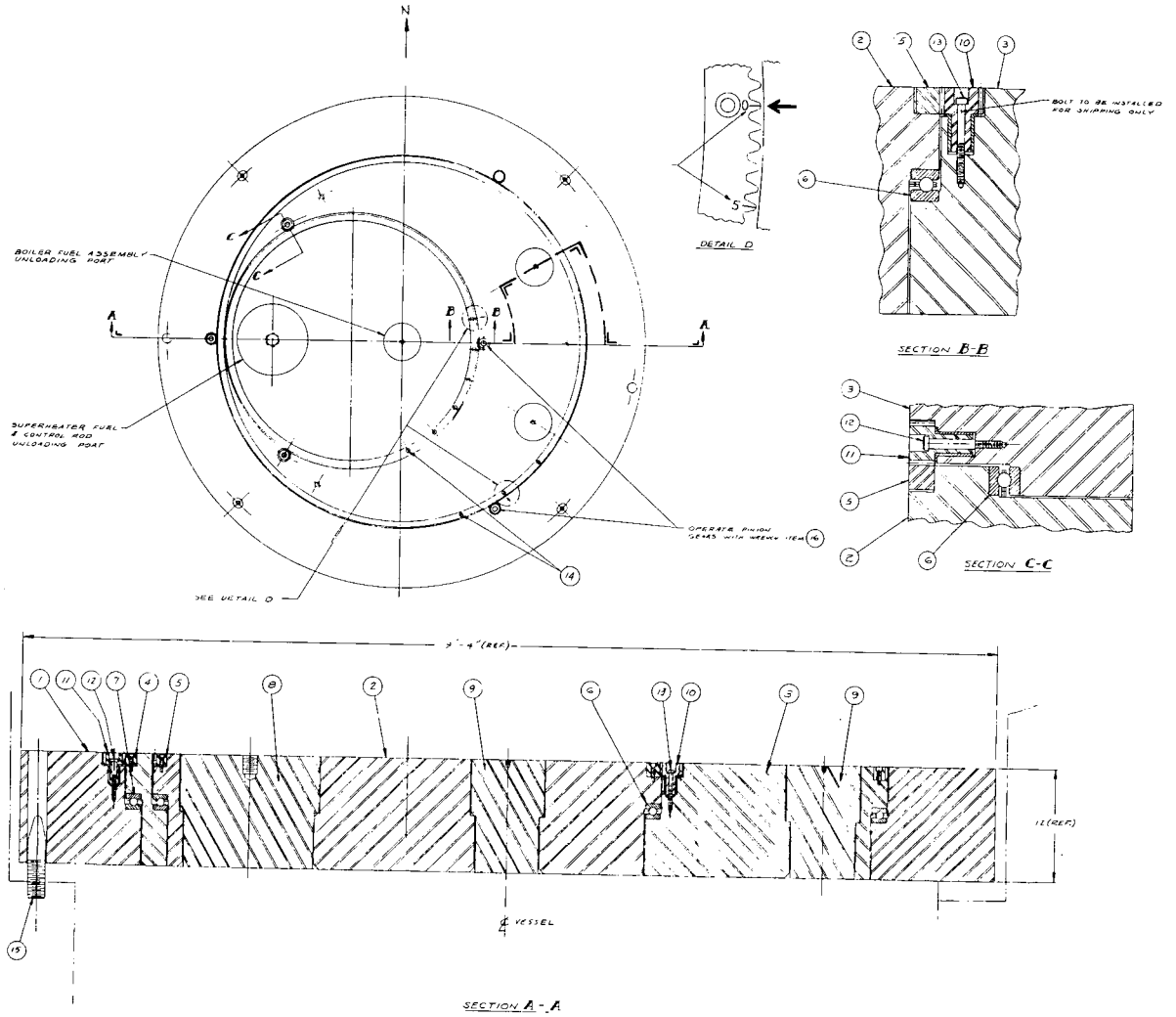

Ref. Dwg. 66-M-90 CFC

KEY

1. Outer Carrier Ring
2. Small Plug Carrier
3. Large Plug Carrier
4. Large Ring Gear
5. Small Ring Gear
6. Small Thrust Bearing Assembly
7. Large Thrust Bearing Assembly
8. 15-in. Plug
9. 7-in. Plug
10. Drive Pinion
11. Pilot Pinion
12. Shoulder Screw
13. Cap Screw
14. Cap Screw
15. Locating Pin

Fig. 407-4 Rotating shield assembly.

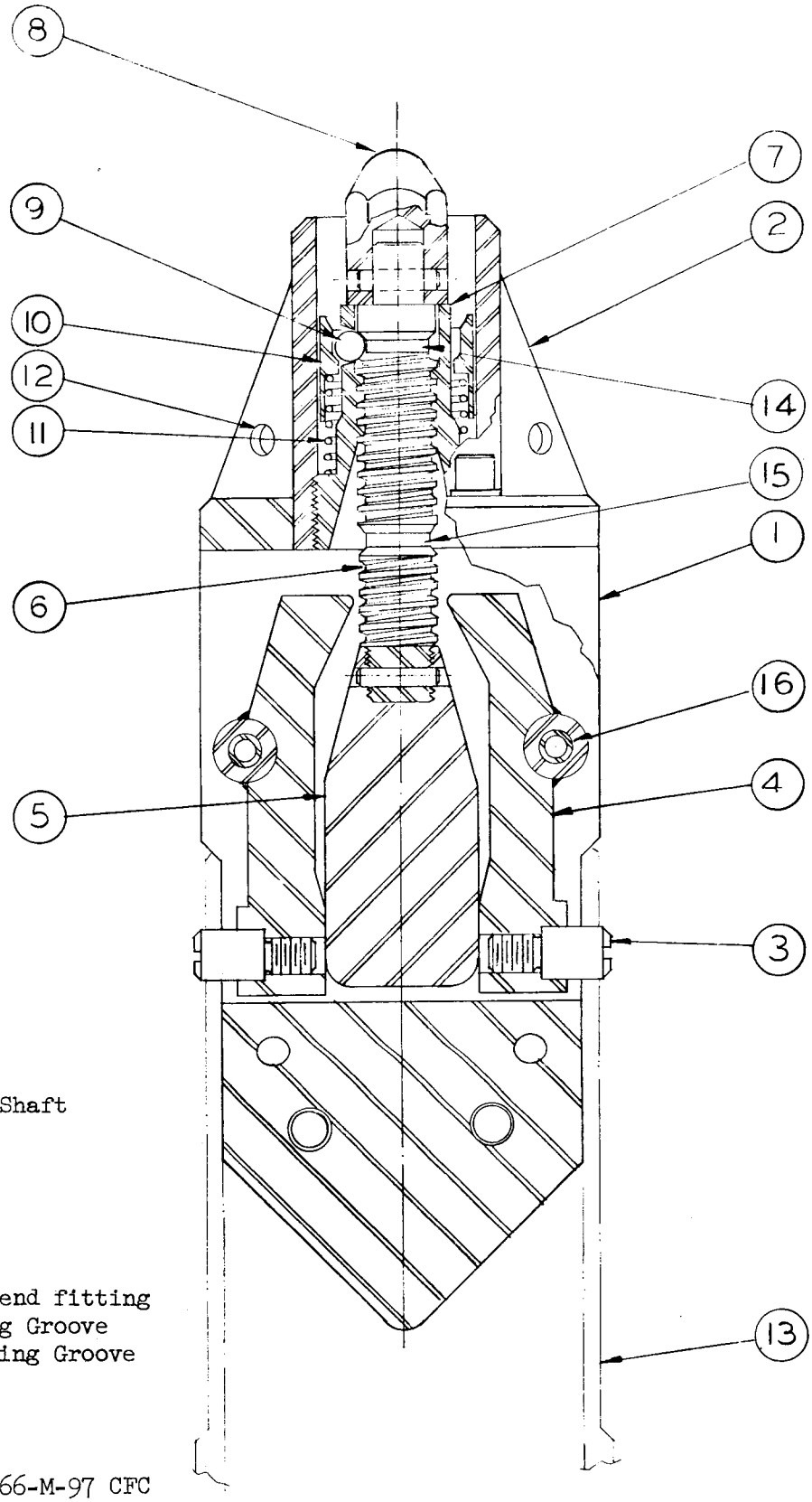

KEY

2. Body Head
3. Pawl Pin
4. Pawl
5. Pawl Actuator
6. Pawl Actuator Shaft
7. Actuator Nut
8. Actuator Head
9. Locking Ball
10. Locking Sleeve
11. Return Spring
12. Lifting Hole
13. Fuel Assembly end fitting
14. Latched Locking Groove
15. Unlatched Locking Groove

Ref. Dwg. GNEC 66-M-97 CFC

Fig. 407-5 Fuel handling tool.

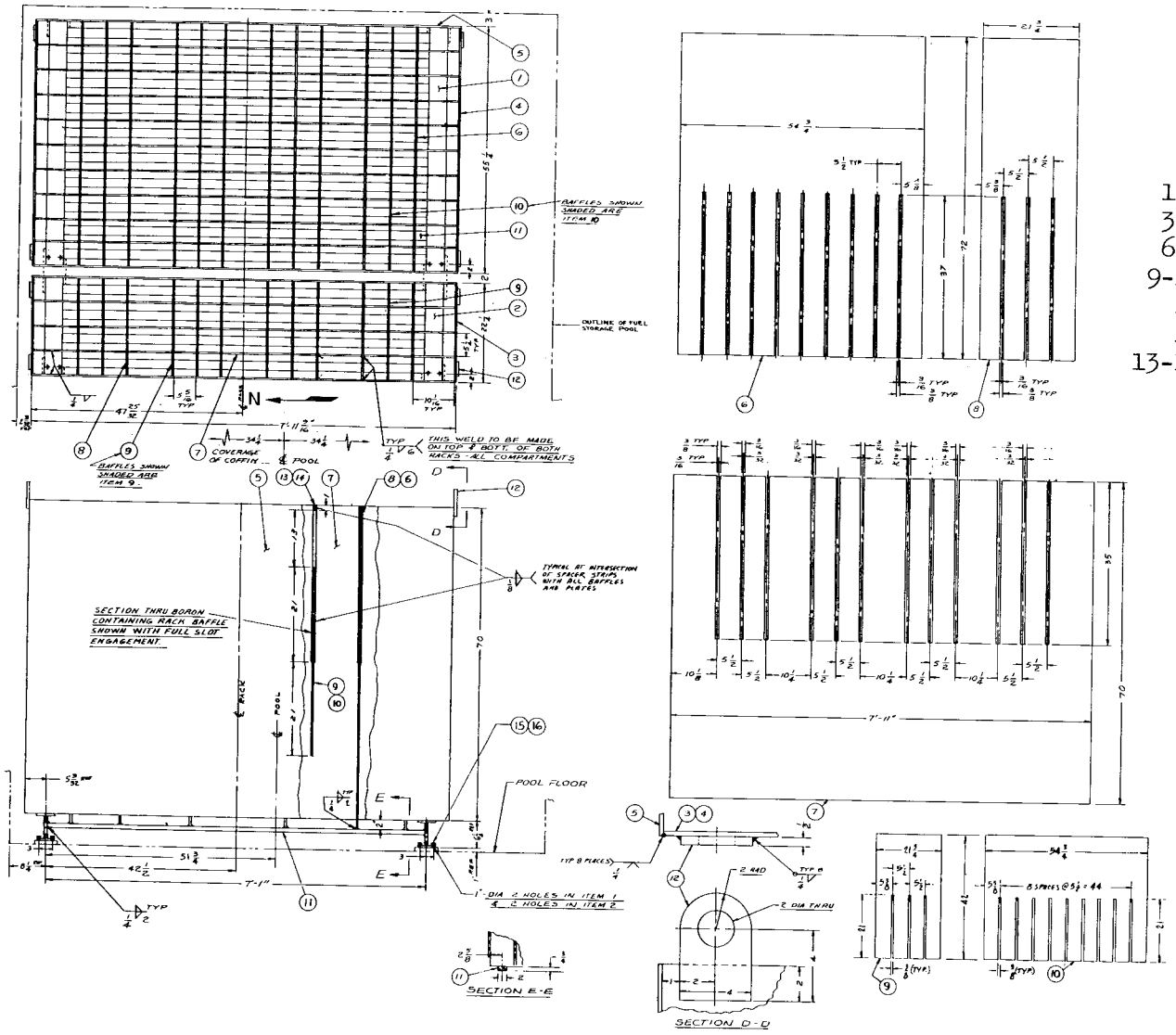

KEY

1-2. Supports
3-5. Outside Plates
6-8. Stainless-steel Baffles
9-10. 1% Boron Stainless-steel Baffles
11. Fuel Support
12. Lifting Lug
13-14. Spacer Strips

Ref. Dwg. GNEC 66-M-95 CFC

Fig. 407-6 Fuel storage racks.

408. FUEL POOL COOLING AND PURIFICATION

Spent fuel is stored in the fuel storage pool after removal from the reactor. The water in the pool cools the fuel elements, and shields the plant and personnel from the highly radioactive fission products in the elements. Purification of the water is necessary to prevent corrosion of the fuel assemblies, to remove radioactive contamination, and to insure good visibility for underwater handling operations.

Cool water enters the pool through a 2-1/2-in. pipe which extends to within 1 ft of the pool bottom at the west end on the north wall of the pool. The 3-in. water outlet is at the east end of the pool, in the overflow sump. Heated water from the pool goes in the pump through a heat exchanger and through the purification system before being returned to the pool. The flow diagram for the system appears in Fig. 408-1. All components of the fuel pool purification system are located on main floor level (37 ft, 4 in.) in the vicinity of the gantry crane center tower.

The pool is equipped with a 2-in. overflow pipe and a locked-closed drain. Both of these drain to the liquid waste handling system. Makeup water for the system is supplied from the demineralized water supply and is controlled by a float-operated valve that automatically maintains the water level 11 in. below the pool top.

The fuel pool liner and fuel storage racks are stainless steel for corrosion resistance. All piping is stainless steel and brass with bronze valves and fittings.

The heat exchanger, (American Standard Industrial Division Model No. 1014 "CP"), is a single-pass counterflow type with externally packed floating tube sheet and is capable of maintaining pool temperature at 120°F with a heat load of 850,000 Btu/hr which corresponds to the heat generation rate from a full fuel loading after a two-day decay period. Heat exchanger design data are summarized in Table 408-1. The heat exchanger is designed in accordance with the ASME Code for Unfired Pressure Vessels and bears the ASME code stamp.

Table 408-1 HEAT EXCHANGER DESIGN DATA

Pool Water (Tube Side)		Cooling Water (Shell Side)	
Flow	85 gal/min	Flow	85 gal/min
Temp. in	120°F	Temp. in	90°F
Temp. out	100°F	Temp. out	110°F
Design pressure	150 psi	Design pressure	115 psi
Duty	850,000 Btu/hr		
Design temp.	300°F		

Cooling water to the shell side of the exchanger is supplied by the cooling water system; the heat from the system is rejected to the external cooling tower.

The exchanger, which is of standard design and construction, has Muntz Metal fixed- and floating-end tube sheets, arsenical admiralty metal tubes, steel shell, cast iron channels and channel covers, and segmented brass baffles.

Two pumps, each capable of full-capacity operation, are used to insure that flow can be maintained at all times. Each pump has a capacity of 85 gal/min when developing a head of 95 ft. The pumps are horizontal single-stage centrifugal pumps of standard design and construction, (Ingersoll Rand Model 1-1/2 RV-5). The pumps have cast iron casings, conventional-type stuffing boxes and bronze impellers and trim and have motors which are 5 hp, 440 volt, 3 phase, squirrel cage induction. Both pumps are powered from the emergency power bus, are locally started, and their operating condition is indicated in the control room. Fig. 408-2 shows schematically the electrical control system for these units.

The fuel-pool water purification system contains a prefilter, a mixed-bed non-regenerative demineralizer, and an afterfilter. The prefilter and afterfilter are made by the Filterite Corporation. The filters are of stainless-steel construction, and use replaceable cellulose acetate cartridges, capable of removing particles of 5-micron size.

The demineralizer, manufactured by Hungerford & Terry, Inc., uses a replaceable 3.5 cu ft mixed resin bed. The resin is Rohm & Haas Amberlite XE-150, Nuclear grade. The demineralizer interior is lined with a 3/16-in. layer of rubber.

Both filters and the demineralizer have two inches of lead radiation shielding.

The system has a temperature annunciator which is operated by high pool temperature. Inlet and outlet pump pressures are locally measured. A remote low-flow annunciator and a local flow gage are in the pump outlet line. Heat exchanger inlet and outlet temperatures are measured by local thermometers. In the water purification system, differential pressures are measured across each filter and across the demineralizer. Flow from the prefilter bypassing the demineralizer is measured.

All piping embedded in the concrete walls of the fuel pool, and the inlet pipe in the fuel pool is stainless steel. All other piping is class "Brass" (see Fig. 400.1-3) which uses ASTM B43 red brass pipe, and bronze fittings, flanges, and valves.

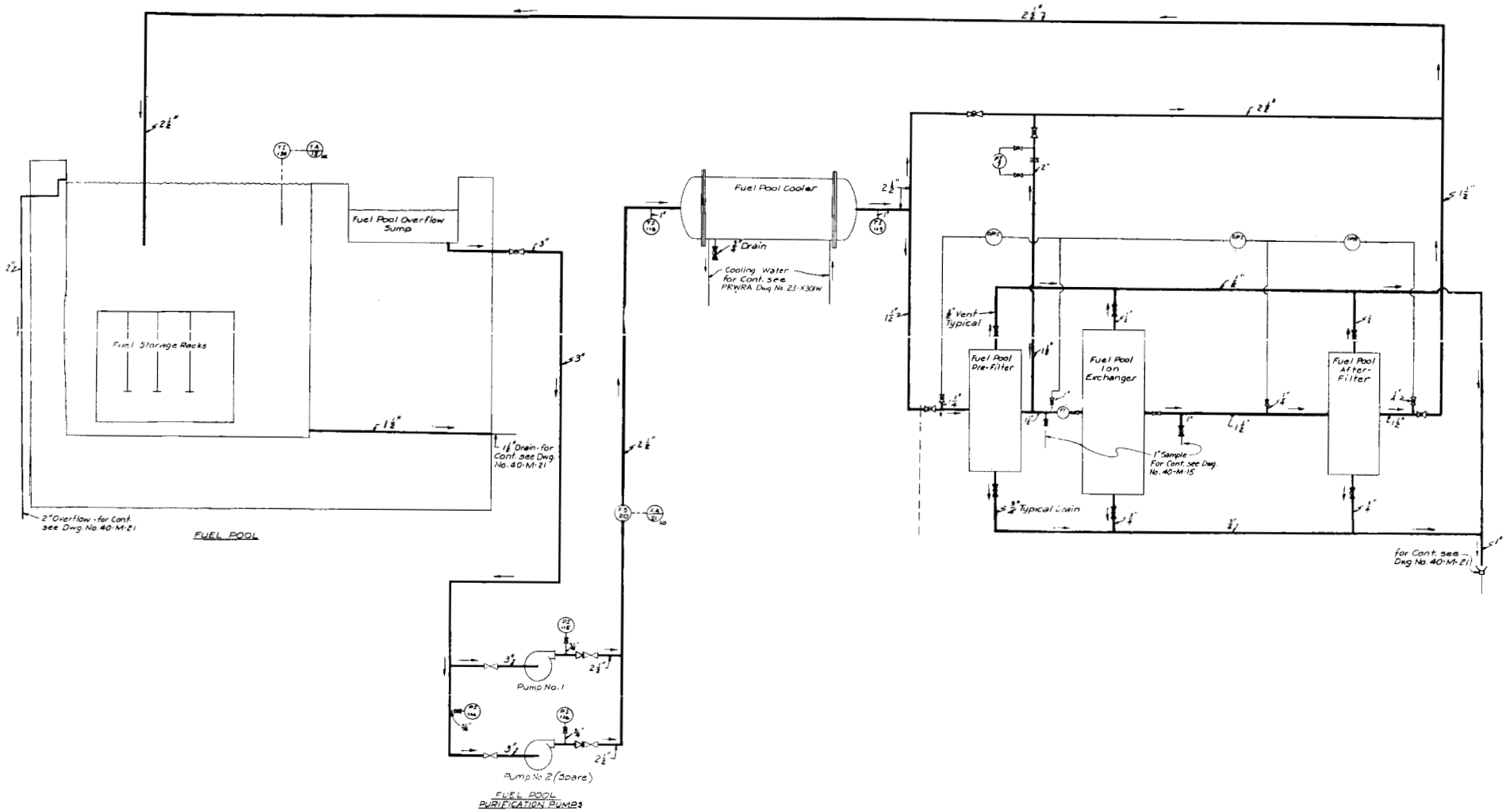

Ref. Dwg. J&M 40-M-19 Rev. 3

Fig. 408-1 Flow diagram for fuel pool.

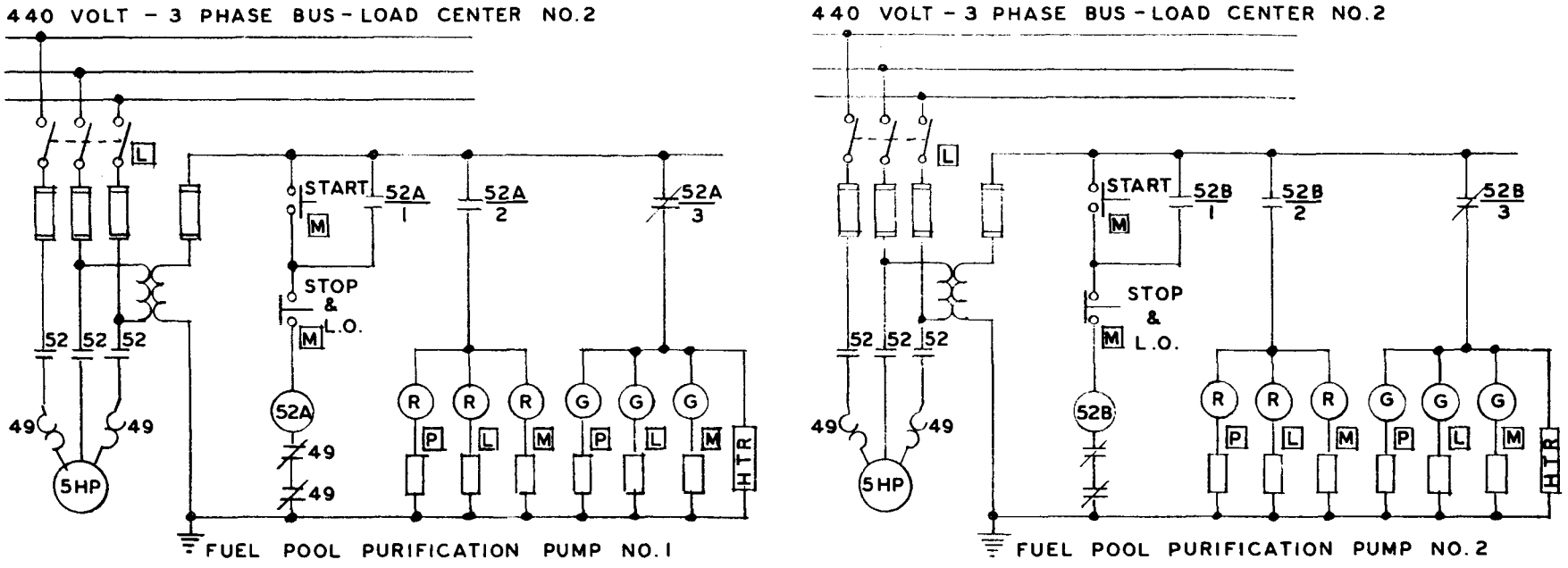

LEGEND

52A – PUMP NO. 1 MOTOR STARTER
52B – PUMP NO.2 MOTOR STARTER
49 – THERMAL OVERLOAD
[P] – MAIN CONTROL PANEL LOCATION
[L] – LOAD CENTER LOCATION
[M] – MOTOR LOCATION

Ref. Dwg. J&M 40-E-11 Rev. 3

Fig. 408-2 Schematic electrical control diagram for fuel pool pumps.

409. REACTOR SHIELD ANNULUS VENTILATION

During power operation the space surrounding the pressure vessel within the inner boundary of the shield structures and above the plane of the pressure vessel shell nozzles is maintained at a pressure slightly below the surroundings by an air ventilation system. The air circulation system protects the shield concrete from overheating — by absorbing the thermal heat losses from the insulated portions of the vessel and attachments — and minimizes the steam escape to the surroundings from flanged connections inside the shielded space. The ventilation system is also designed to protect the operating personnel during shutdown fuel handling operations from the injestion hazard associated with the release of fission gases from defective fuel when the vessel is open during this period; the downward flow of air in the region where the fuel unloading crew is working and its withdrawal below working surfaces prevents any fission gases from escaping to the personnel working areas.

The air circulation in the shield space above the vessel is induced by the motor-drive reactor annulus exhausters which create the differential pressure for the flow. Plant air is drawn into this space (refer to Fig. 308-3 through the eight radial vent ducts (6 in. x 2-3/4 in.) in removable shield No. 1; through the control rod drive trench and interconnecting drive shaft sleeves; and through the pipe slots in the concrete block tunnels. The heated air flows through the 1 inch annulus between the vessel insulation and shield lining to a steel collection header embedded in the shield concrete below the ledge support for the fuel handling rotating shield plug assembly. During refueling operations air is drawn into the refueling port in the rotating shield assembly; this precludes the possibility that the fuel handling crew will be exposed to fission gas release from the vessel due to a defective fuel element. The 110-3/4-in. OD by 103-3/4-in. ID by 10-in. high ring header has cut-outs (2 each) 5-1/4 in. dia., 4-1/4 in. dia., and 3-3/4 in. dia. on the inner surface to give uniform flow distribution entering it. The 8-in., Schedule 40, steel pipe outlet from the header has an offset bend in the shield to prevent radiation streaming through the pipe. The pipe routing to the suction header of the two reactor annulus exhauster fans, located in the reactor purification shielded compartment, is shown in Figs. 907-4 and 907-5.

The annular space between the pressure vessel shell and the inside surfaces of the neutron shield tank insulation liner, bottom shield plug, and vessel support skirt is designed as a sealed chamber to minimize air flow into and out of this space. Air circulation in this region is undesirable because of the neutron activation of the Argon constituent in air; the Argon 41 radioisotope resulting from the neutron irradiation emits a 1.37 Mev energy level gamma ray and decays with a half-life of 109 minutes. Openings into this space, such as for the pressure vessel pipe penetrations through the bottom shield plug (see Fig. 308-1) and the vessel thermocouple leads penetrating through the vessel support

skirt (see Fig. 306-7) are sealed with bellows expansion joints at the pipe penetrations and with an asbestos-packed gland at the thermocouple leads junction. The shield annulus space is maintained at a slight negative pressure (1 in. H_2O) relative to the surroundings so that if leakage does occur through the seal members, the radioactive air does not escape to adjacent personnel access areas. The negative pressure is obtained by the connection of the two, 2-in., Schedule 80 steel through-pipes in the bottom shield plug to the suction side of the exhauster fans as shown schematically on Fig. 410-1 and in the piping layout shown in Fig. 907-3. The air drawn into this space is mixed with the plant ventilation air (section 907) and discharged through the stack. The design criterion for maximum air inleakage into the sealed space is 60 cubic in./min in order to limit the Argon 41 activity to less than 4×10^{-8} microcuries/cm^3 in the stack effluent.

Two reactor annulus exhauster fans are provided; one is used during power operation and two are in service when the plant is shutdown for refueling. Each fan (Clarage Fan Co. size 7, Type Cl) has a cast iron casing internally coated with bisonite phenoflex and the shaft seal is the carbon ring type. The unit is rated 1370 cfm, 250°F air at a static discharge pressure of 5 in. water. The dripproof drive motor is direct coupled (Arrangement 4) and rated 5 hp, 3450 rpm, 440-volt, 3 phase, 60 cycle. The electric control circuit for each fan is shown in Fig. 409-1. Each fan is started and stopped locally. Since these fans are necessary for the refueling operations, they are connected to Motor Control Center No. 2 whose bus is supplied power from the emergency diesel generator.

An electric motor-operated damper is installed in the suction line to each exhauster fan. The damper is automatically opened and closed when the fans are started and stopped, respectively. The damper operator (Minneapolis-Honeywell Model M905E) is provided with a potentiometer which permits setting the damper at prescribed open and closed limits to regulate the flow.

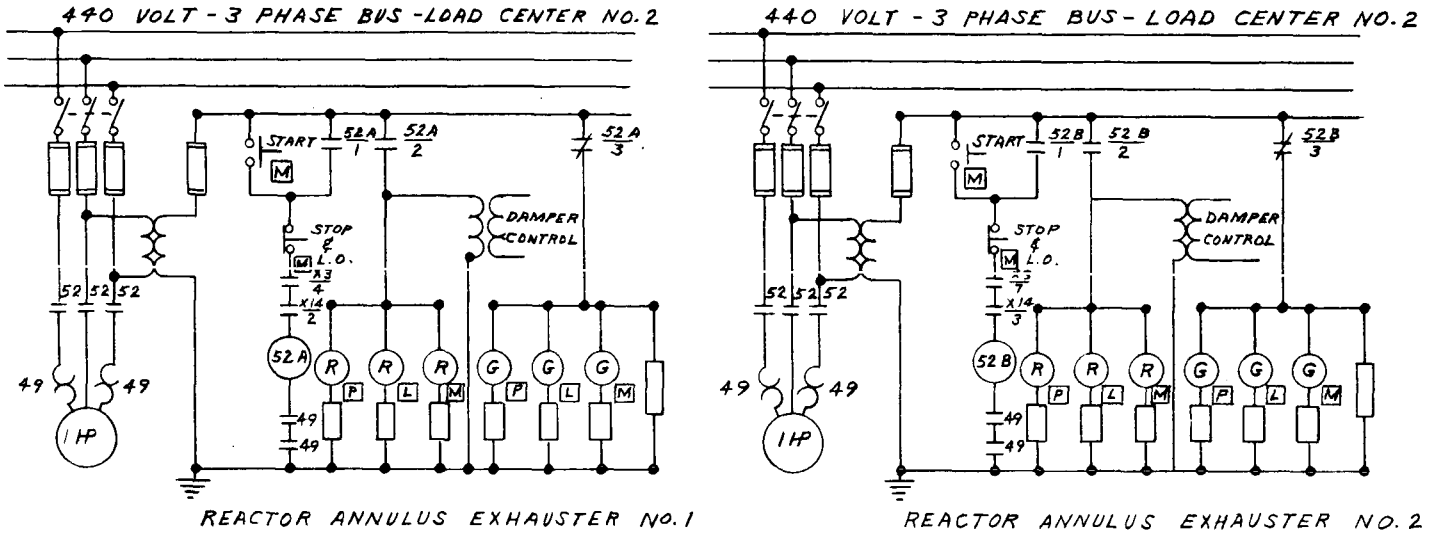

REFERENCE DWG. J.& M. 40-E-13 REV. 2

LEGEND

52A - EXHAUSTER NO. 1 MOTOR STARTER
52B - EXHAUSTER NO. 2 MOTOR STARTER
49 - THERMAL OVERLOAD
[P] - MAIN CONTROL PANEL LOCATION
[L] - LOAD CENTER LOCATION
[M] - MOTOR LOCATION
X3 - HIGH BUILDING ACTIVITY INTERLOCK
XA - REACTOR BUILDING ISOLATION VALVE INTERLOCK

Fig. 409-1 Schematic wiring diagram of reactor annulus exhausters.

410. RADIOLYTIC AND RADIOACTIVE WASTE GAS DISPOSAL

A. Normal Operation

During normal operation, the gas exhaust system will be used to dispose of noncondensible gases removed from the main condenser by the air ejector. This system is shown schematically in Fig. 410-1. These gases will include the air which leaks into the condenser through the subatmospheric valve stem seals, gasketed joints, etc.; the hydrogen and oxygen produced through radiolytic decomposition of the reactor water; water vapor entrained from the air ejector after cooler; plus small amounts of radioactive N^{16}; small amounts of A^{41}; and traces of other radioactive gaseous products. The approximate volume flows of the various major gases at 90°F and 1 atm are as follows: air = 7.8 cfm max.; H_2 = 1.25 cfm; O_2 = 0.63 cfm; H_2O = 1.1 cfm.

Since the main source of radiation is the ejector exhaust gases which concentrate the N^{16} (7.3-sec half-life), a section of 20-in. Schedule 40 carbon steel pipe 5 ft, 6 in. long, having a hold-up volume of approximately 10 cu ft, is connected to the air ejector outlet so that most of the N^{16} will decay in this pipe before it leaves the shielded air ejector compartment. The outlet line from the 20-in. hold-up pipe is equipped with a 3/4-in. flow limiting orifice to confine the overpressure from any accidental hydrogen-oxygen reaction to the ejector and the delay pipe.

Immediately downstream of the hold-up pipe approximately 30 cfm of dilution air from the turbine gland seal exhausters is added to the ejector gases to produce a nonexplosive mixture. A hydrogen detector connected to an alarm on the main control panel monitors this stream, and will warn the plant operators if the hydrogen concentration approaches the 4 vol.% concentration limit for a nonexplosive mixture.

After being diluted, the gas mixture normally flows in series through a charcoal trap and a delay tank, and enters the main air duct leading to the building exhaust fan.

The charcoal trap upstream of the delay tank is identical to the vapor sphere charcoal trap described in detail in Section B. Its function is to trap traces of iodine which might be present in the ejector exhaust for extended periods following a fuel failure. Because of the possible adverse effects of continuous long-term exposure of charcoal to moist air, this unit may not be very efficient in trapping an initial burst of iodine released by a fuel failure. This type of release will be handled by diverting the gas to the vapor sphere charcoal trap which will be kept fresh and ready for emergency service at all times.

The delay tank is a 690-gal (92 ft^3) steel tank 7 ft, 10 in. long and 4 ft in diameter. The delay tank is fabricated of 1/4-in. steel plate to meet the requirements of Section VIII of the ASME code and is designed to withstand a hydrostatic test at 50 psig. There are seven transverse baffles inside the tank to insure maximum holdup time for flowing gases. This tank is located in the shielded vapor sphere compartment. From the standpoint of system layout, the delay tank is located between the ejector exhaust activity monitor, described in section 412, and the valves which divert the ejector exhaust gases to the vapor sphere in case of fuel failure (MOV-25 and 26). The delay time of approximately 2 minutes afforded by this tank will provide time for the operator to divert the ejector gases to the vapor sphere before a burst of active material from a fuel failure has had time to escape into the building exhaust ducts. The control circuit for the diversion valves (MOV-25 and 26) is shown schematically on Fig. 410-2.

In normal operation the dilution achieved by mixing the ejector exhaust gases with the building ventilation air will reduce the concentration of N^{16} and A^{41} to 3.04×10^{-12} uc/cm^3 and 1.7×10^{-8} uc/cm^3, respectively, at the stack inlet. The dispersion provided by the stack will thus be more than adequate to assure safe ground concentrations.

B. Fuel Failure

In the event of a fuel failure in one of the hottest superheater fuel elements after a long period of operation, fission-product gases in the amounts listed in Table 410-1 could conceivably be released to the main steam condenser. Although the majority of the iodine will be trapped in the water in the main condenser, the activity of the noble gases and the residual iodine carried out the air ejector will be too great to permit immediate release of these gases to the stack.

To overcome the gas release problem, a side loop of piping, running parallel to the normal ejector exhaust discharge line, is provided which contains a charcoal trap, a vapor sphere, and a circulating blower. By diverting gases into this loop, as described in Section A, and allowing them to accumulate in the vapor sphere, the operator can avoid the uncontrolled release of activity up the stack.

The vapor sphere will hold 1300 cu ft of gas, which will give the operator a minimum of 30 minutes to achieve an orderly shutdown of the plant for replacement of the failed fuel. Actually this period can probably be extended well beyond 30 minutes by reducing the power level to minimize production of radiolytic hydrogen and then cutting down the volume of dilution air mixed with the ejector exhaust gases.

The vapor sphere is a large steel tank manufactured by the Chicago Bridge & Iron Co. with a flexible neoprene-coated nylon diaphragm which divides the unit horizontally into two compartments. The diaphragm is sealed to the inside of the vapor sphere at the equator. As gas is added to the bottom of the vapor sphere, the diaphragm is slowly inflated

Table 410-1 SIGNIFICANT FISSION PRODUCTS THAT MAY ENTER STEAM SYSTEM FOLLOWING CLADDING LEAK

Isotope	Half Life	Energy Group* (per cent) I	II	III	IV	Activity Initially Curies	Activity After One Day Decay Curies
Kr^{85m}	4.36 h	80	20			62.9	1.40
Kr^{85}	10.3 y	β emitter				3.02	3.02
Kr^{88}	2.77 h	49	28	18	68	142.0	0.343
I^{131}	8.05 d		97.3			122.0	112
Xe^{131m}	12 d	100				1.26	1.26
I^{132}	2.4 h		226	19	7	201.0	0.201
I^{133}	20.8 h		99	1		282.0	127
Xe^{133}	5.27 d	100				278.0	264
I^{135}	6.7 h			50	50	254.0	21.8
Xe^{135m}	15.6 m		100			72.3	6.06
Xe^{135}	9.13 h	96	5			107.0	81.3
Cs^{137}	26.6 y	β emitter				16.4	16.4

* GROUP I Gamma Energy 0 - 0.25 Mev
GROUP II Gamma Energy 0.26 - 1.0 Mev
GROUP III Gamma Energy 1.01 - 1.7 Mev
GROUP IV Gamma Energy >1.70 Mev.

and pushes air from the upper section of the vapor sphere out through a vent at the top. If the diaphragm ever develops a leak, the vapor sphere can be sealed by closing the top vent valve.

The quantity of gas in the vapor sphere at any time is indicated by a sealed fill indicator attached to the diaphragm. The indicating dial for this device is mounted outside the shielded vapor sphere compartment.

The vapor sphere shell is 1/4-in.-thick steel plate (ASTM A201 Gr B) and is designed for 15-psig internal pressure in accordance with ASME Code Section VIII. The shell is also capable of withstanding external pressures up to 5 psig with zero-psig internal pressure in case the containment building should ever be pressurized when the vapor sphere is sealed. The neoprene-coated membrane alone will withstand 5-psig pressure in the bottom compartment with the top compartment vented to the building atmosphere. The entire unit has been verified to be gas tight by soap and gas leakage tests. With the top vent open it will hold 5-psig pressure with less than 0.2 per cent loss of the contained air per 24 hours and with the top vent closed it will lose less than 0.2 per cent per day with 15-psig internal pressure.

The pressure required to force gas into the vapor sphere is only that required to lift the diaphragm, which in this case is less than 1 inch of water. Thus, the head developed by the gland seal system blowers and the air ejector are ample for filling the vapor sphere.

Before the radioactive gases are allowed to enter the vapor sphere they will be forced to pass through a charcoal trap which will remove practically all of the radioactive iodine from the gas stream.

As indicated earlier, the charcoal trap in the side loop containing the vapor sphere will be used only when gases are diverted to the vapor sphere. This procedure insures maximum trapping efficiency for this unit in emergencies.

The construction of the charcoal traps is quite simple. Each unit consists of a 1/4-in.-thick cylindrical steel shell (ASTM A 285) 23-1/2 in. ID with a flanged top and a welded elliptical bottom head. enclosed in 2-3/4 in. of lead shielding. Inside the steel shell are a prefilter assembly (Aerosolve 43C85), a set of nine DOREX No. 42 charcoal-filled canisters attached to a stainless-steel manifold plate, and an afterfilter assembly (Aerosolve 43CD85). Gases flow in series upward through the three inner assemblies. The filter assemblies and the canister assembly are arranged so they can be lifted vertically from the shielded container for disposal when the top flange is opened. The units are vertically supported on four pipe columns 12 in. above the foundation and have an over-all height of 71 in. The lead shielding is protected by an outer casing of steel 1/4 in. thick.

The traps are designed for a maximum rated flow of 180 cfm of air in case it ever becomes necessary to divert all of the gland seal exhaust air as well as the ejector exhaust into the vapor sphere line. At full-rated flow the pressure drop across each of the filter assemblies, when clean, will be approximately 0.5 in. H_2O per assembly, and across the DOREX cartridges it will be approximately 0.2 in. of water.

The prefilters will clean the air entering the charcoal canisters and keep the charcoal surfaces free of dust and corrosion products which might hinder adsorption. They will also serve to trap any iodine adsorbed on particulate material which would otherwise pass through the charcoal bed without being trapped.

The afterfilters will trap any fine particles of charcoal which are released from the canisters and thus will prevent the spread of contaminated material beyond the traps.

In case it becomes desirable to pass the gases collected in the vapor sphere through the charcoal canisters more than once before they are released to the stack, a small blower unit is also included in the gas disposal trap. This blower is arranged so it can take gas from the vapor sphere, draw it through the charcoal trap, and then return this gas to the vapor sphere. Connections are also provided in the piping downstream of the blower so that the blower can be used to dump gas to the building exhaust system or on to force gas through an emergency trap arrangement such as a liquid-air-cooled trap if necessary. The diagram of the electric control system for the vapor sphere circulation blower is shown on Fig. 410-3.

The vapor sphere circulation blower (Clarage Fan Co. Model 5C1) is driven by a 1-hp, 3450-rpm motor and is capable of delivering 100 scfm at 4-1/4 in. H_2O static pressure. The metal casing and the fan are coated with six coats of baked phenolic plastic. The fan drive shaft is equipped with a special carbon ring seal to prevent gas leakage at the point where the shaft passes through the fan casing.

The motor-operated valves used to divert gases into the vapor sphere (MOV-25 and 26) can be manually actuated by the operator from the main control panel. They are also interlocked with the building exhaust air activity monitor so that diversion of the ejector exhaust gases to the vapor sphere is accomplished automatically if the building exhaust monitor indicates high activity in the building exhaust air. Other valves in the vapor sphere loop are operated from outside the compartment by means of stem extensions which pass through the walls.

The vapor sphere circulation blower is actuated by local manual controls mounted outside the vapor sphere compartment.

Piping for the gas disposal circuit is carbon steel ASTM A53 Gr B Schedule 40, sized as indicated on the flow diagram.

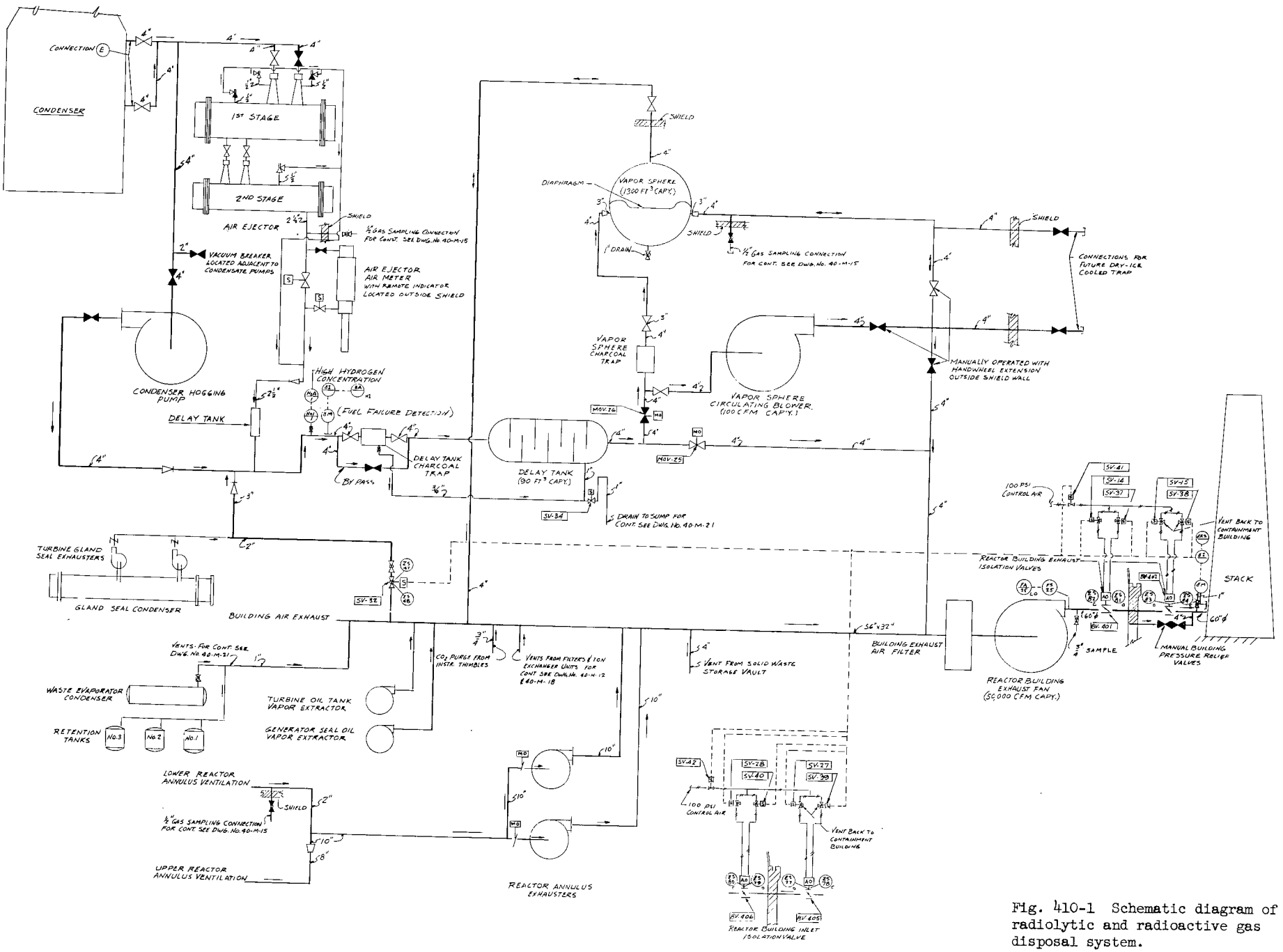

Fig. 410-1 Schematic diagram of radiolytic and radioactive gas disposal system.

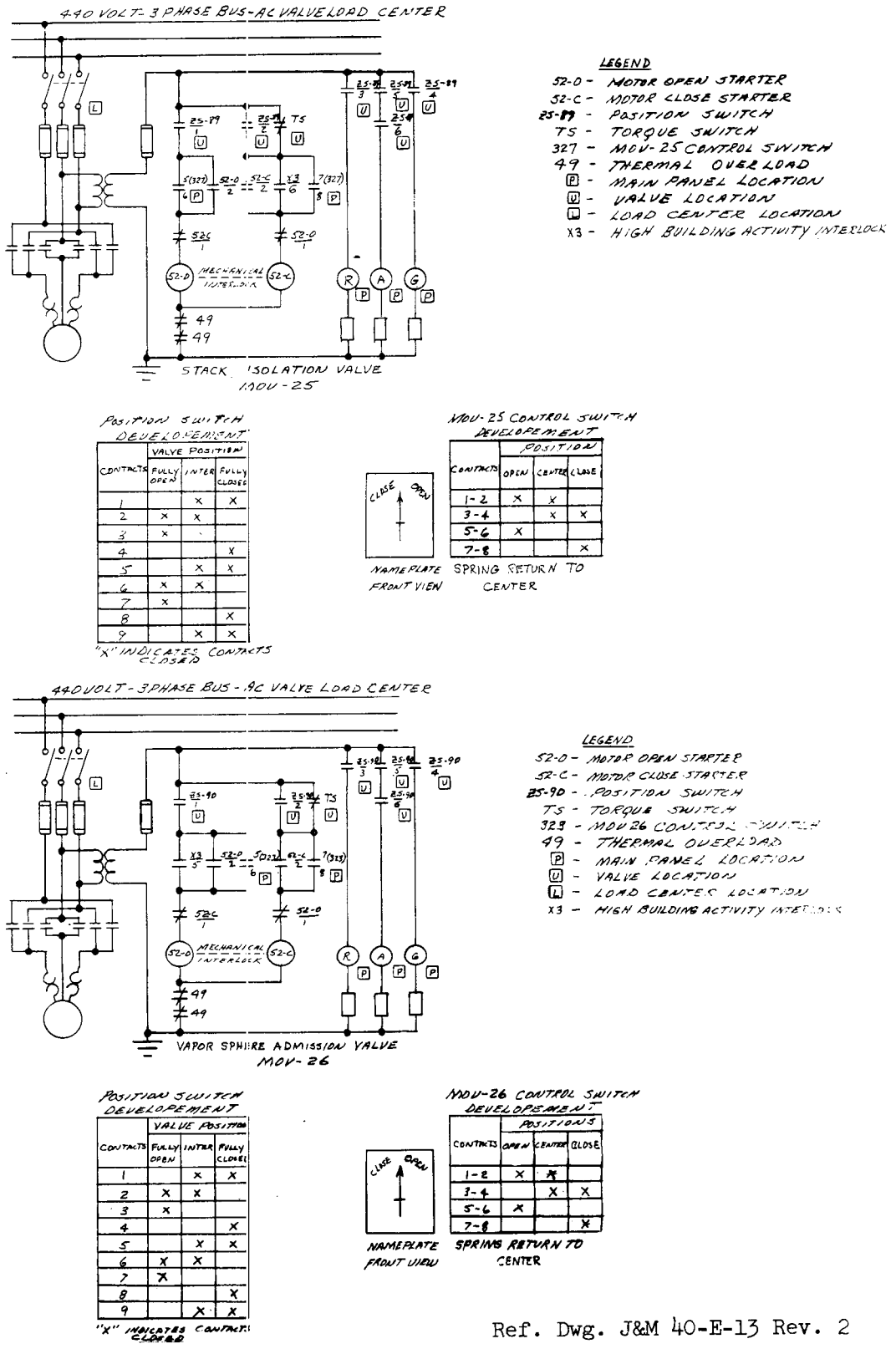

Ref. Dwg. J&M 40-E-13 Rev. 2

Fig. 410-2 Schematic electrical control diagram for motor-operated radiolytic gas diversion valves.

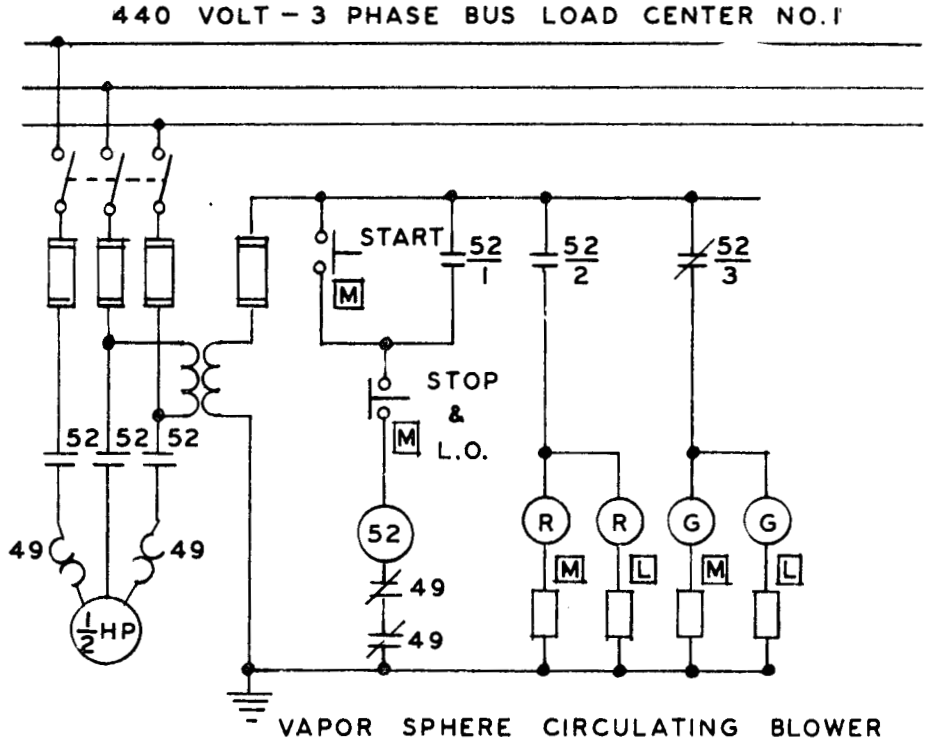

LEGEND

52 – MOTOR STARTER

49 – THERMAL OVERLOAD

[M] – MOTOR LOCATION

[L] – LOAD CENTER LOCATION

Ref. Dwg. J&M 40-E-13 Rev. 2

Fig. 410-3 Schematic electrical control diagram for vapor sphere recirculation blower.

411. EMERGENCY CORE SPRAY

The emergency core spray is a gravity actuated spray system mounted inside the reactor pressure vessel as shown in Figs. 301-2 and 406-1. The system is designed to cool the reactor core in case all the primary cooling water is lost from the vessel. The gravity head available to this system is sufficient to enable it to operate at design flow with a back pressure in the reactor vessel as high as 25 psig. The 100 gpm design flow of spray water is sufficient to absorb all the heat generated by the core one minute after shutdown (4.3% of full power) if only 20 per cent of the spray water is effective in providing evaporative cooling of the fuel.

Raw water from the storage tanks outside the building (refer to section 1101) enters the reactor pressure vessel through a 2-in. diameter nozzle mounted in the head of the vessel (nozzle N). Inside the vessel this nozzle is connected to a horizontally mounted rectangular grid of stainless pipe attached to the underside of the vessel head (see section 306-D). This top header assembly has 20 nozzles welded to it which are sized to operate with a pressure drop of 20 ft of H_2O at the design spray rate of 100 gpm total. Sixteen of these nozzles are pointed directly downward into the central or boiling zone of the core. They are designed to spray-distribute approximately 60% of the incoming water uniformly into the open tops of the boiler fuel assemblies. The other four nozzles attached to the top header discharge the remaining 40% of the incoming water evenly into four vertical standpipes which supply water to the superheater assemblies.

By placing the 20 primary distribution nozzles at the same elevation, (el. 63 ft, 8 in.) the proportion of water delivered to the two zones of the core does not vary as the total flow of spray water is changed. This feature makes it feasible for the operator to adjust the total spray rate over a range from the 100 gpm design flow down to as low as 20 gpm if it becomes necessary to conserve the supply of emergency cooling water or to spray the core for an extended period following an accident. Careful spray flow control will be employed only in rare emergencies where it is considered advisable to conserve the emergency water supply.

Because the superheater fuel assemblies cannot easily be cooled by an overhead nozzle arrangement, the spray water for cooling these fuel assemblies is delivered by horizontally mounted nozzles, mounted on the reactor core structure (section 304), which throw water into distributor pans built into the upper ends of the superheater assemblies (see Fig. 302-8). There are eight superheater spray nozzles for each of the four sides of the core. Each bank of nozzles is welded to an independent header which is supplied with water from one of the four vertical standpipes mentioned earlier (see Figs. 301-3 and 304-1). At design flow rate, the head required to force the water through these nozzles will be obtained automatically from the column of liquid built-up in the standpipes. Thus, water for cooling the superheater flows from the top header nozzles into

the vertical standpipes and is discharged laterally into the individual superheater assemblies.

Once the cooling water reaches the superheater assemblies it is evenly distributed to all the tubes by small nozzles attached to the bottom of the distributor pans described earlier in section 302.

The superheater core spray standpipes are bolted to the reactor core structure baffle support. If necessary, the standpipes can be removed for repair or alteration, however, they do not have to be moved for normal operations, such as during fuel unloading or control rod replacement operations.

A removable stainless steel screen (5 x 5 mesh) is installed in the top of each spray standpipe to prevent the entry of any particles which might plug the superheater distributor nozzles. A strainer assembly is also installed in the main core spray line just upstream of nozzle N to protect the boiler spray nozzles against plugging.

The water supply for the emergency core spray comes from four 25,000 gallon carbon steel tanks located on the hillside east of the plant at invert el. 176 ft, 0 in. (see Fig. 1101-2). These tanks serve as a common source of water for four emergency systems: 1) the emergency core spray, 2) the inside emergency building spray, 3) the outside building spray and 4) the inside fire portection system. These emergency tanks are kept full at all times. In addition there will normally be 40,000-50,000 gallons of water stored in the two 25,000 gallon water supply storage tanks mounted at invert el. 196 ft, 0 in. which can be drained by gravity into the emergency tanks through the normal make-up lines. Additional water is also available to the site at 50 gpm from the 93,000 gallon tank in the city of Rincon at el. 138 ft, 0 in., from the 5,000 gallon site water supply tank and from Well No. 3 on the site which can deliver 25 gpm continuously as long as there is power for the well pump.

For the most part the emergency water supply requirements are determined by the requirements of the inside fire protection system as set up by Factory Mutual Engineering Division to meet their "Improved Risk" standards. These requirements called for two separate groups of emergency tanks with a minimum total capacity of 90,000 gallons each feeding a separate 100% capacity pipeline leading to the building fire header and capable of delivering water at 750 gpm through either line. Also under Factory Mutual rules the outside fire hydrant system could not be connected to the emergency tanks unless the amount of stored water was increased to 60,000 gallons so the makeup water storage tanks were used to supply the water for the outside fire hydrants.

In the worst conceivable case the core spray might require water at the same time the building spray or the fire spray was in use. Because of the extremely low probability of the simultaneous occurrence of a major fire followed by a demand for building spray water, it is

considered safe to utilize the same stored water for either fire or building spray.

In addition, although spraying the building atmosphere after an accident would be beneficial in reducing the radiation hazards to areas surrounding the plant, the consequences of delaying this spraying operation for several hours or more, if necessary, would not be disastrous. Thus, to assure protection against core meltdown approximately 15,000 gallons of emergency water would be reserved to operate the core spray continuously on a controlled flow basis for 8 hours. The remainder of the emergency water supplemented by the other sources of water mentioned earlier would be adequate to supply water for interior fire fighting needs.

The emergency storage tanks are connected to a 12-in. header near the east side of the building by two buried 12-in. lines approximately 1000 ft long. The buried piping is AWWA Class 150 mechanical joint cast iron pipe with cast iron valves. Connecting piping, such as the 10 in. connecting lines to individual storage tanks, are schedule 40 steel pipe with cast iron valves. A three inch feed line for the core spray is connected to the 12-in. header near the entrance building.

Actuation of the core spray is accomplished by opening a 3-in. d-c motor-operated gate valve, MOV-4, which is mounted in the valve pit just outside the reactor shutdown station (pillbox) in the administration building. Opening this 900-lb carbon steel valve applies main header pressure to the upstream side of twin, stainless steel, tilting disc, check valves mounted in parallel in the core spray line inside the containment building. As soon as the back pressure from the reactor has dropped to a point where these check valves can open, i.e., when blowdown of the vessel is essentially completed, water will flow into the core spray header. The flow of water is indicated by a local flow indicator in the pillbox; the indicator is connected to a pitot tube located upstream of MOV-4.

A 1-in. double valved bleed-off line upstream of the twin check valves is used to make certain the check valves are properly seated during normal operation. Any continuous leakage occurring when the bleed line valves are opened will indicate faulty seating of either the check valves or MOV-4.

A 1-in. demineralized water line is also connected to the core spray line just upstream of the twin check valves. This connection may be used during shutdown to add water to the reactor vessel, and at the same time to make sure the twin check valves open freely and the core spray lines are free of any obstructions.

A 3-in. globe valve is installed in the core spray line downstream of the twin check valves. This valve will be locked open when the reactor is operating, but with the reactor shutdown, it can be closed to permit repair of the check valves.

As indicated in Fig. 411-1 the spray admission valve, MOV-4, can be actuated by manual operation of valve control switch 631 on the main control panel or by manually operating the emergency scram bar on the main panel (through switch 645). Also MOV-4 is automatically opened simultaneous by the closing of level switch LS-21 on extremely low water level in the reactor vessel (El. 47 ft - 0 in.) and closing of pressure switch PS-39 when reactor pressure drops below 50 psig. Switch 631 provides simple on-off positioning control of the motor operation and will override other controls. This switch is equipped with three standard valve position indicating lights. Switch 645 and the LS-21-PS-39 combination are both arranged so that momentary contact will cause MOV-4 to go to the full open position. However, switch 645 is interlocked with PS-39 so that opening of MOV-4 in response to operation of switch 645 is automatically delayed until the reactor pressure drops below 50 psig.

A key operated override switch is provided in the pillbox whereby all electrical operation of MOV-4 can be cut off. This will allow MOV-4 to be manually positioned by turning a handwheel inside the pillbox that is coupled directly to the valve by an extension shaft through the wall of the pillbox.

Annunciator H-2 on the main control panel will give an alarm whenever MOV-4 moves off the full closed position and Annunciator H-10 will give an alarm when control of MOV-4 is transferred to the pillbox by means of the key operated override switch.

The level of water in the two emergency water storage tanks is presented on two dual-pen recorders in the main control room and on two dual-pen recorders in the pillbox in accordance with Factory Mutual requirements.

Position switches are provided on the post indicator valves that are used to control the flow of water to the 12 in. fire spray header outside the building as discussed in Section 911. These position switches will trip an annunciator on the main control panel if any post indicator valve is moved off the full open position.

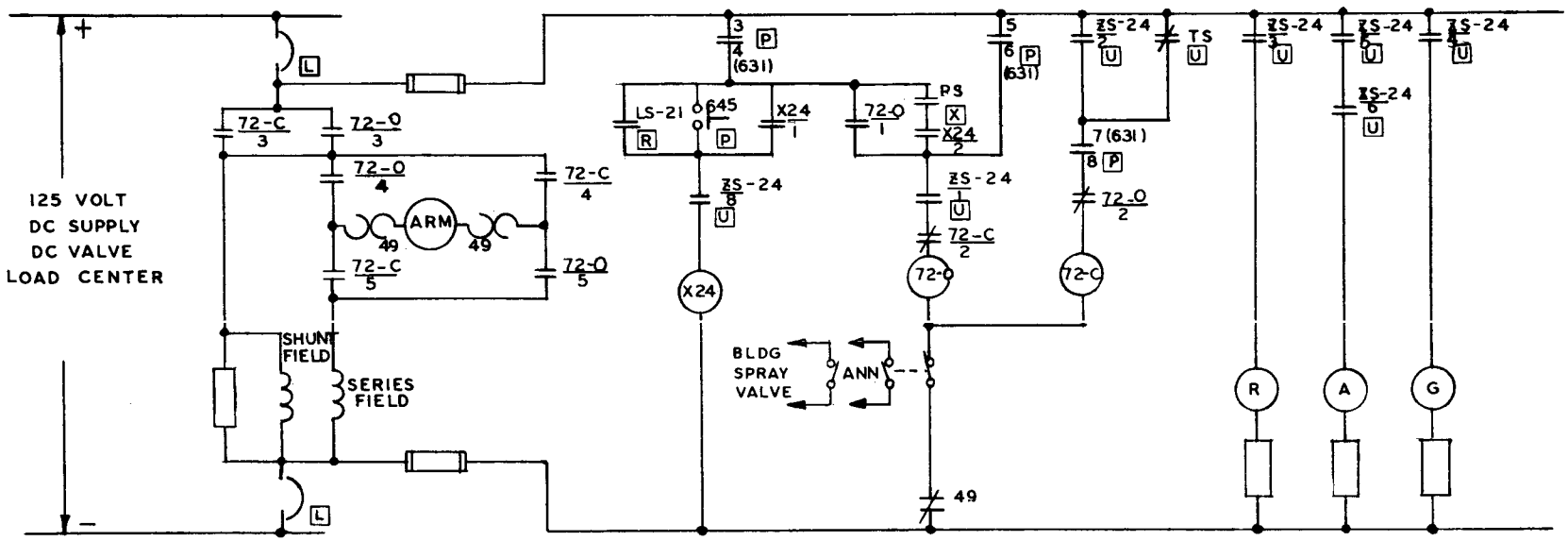

REACTOR CORE SPRAY VALVE MOV-4

Position Switch Development

Contacts	Valve Position		
	Fully Open	Inter	Fully Closed
1		X	X
2	X	X	
3	X		
4			X
5		X	X
6	X	X	
7	X		
8			X
9	X	X	
10		X	X

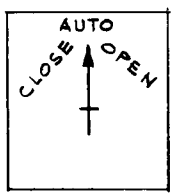

Name Plate
Front View

Control Switch Development

Contacts	Positions		
	Open	Auto	Close
1 - 2	X		
3 - 4		X	
5 - 6	X		
7 - 8			X

Spring Return to Auto
"X" Indicates Contacts Closed

LEGEND

72-D - Motor Open Starter
72-C - Motor Close Starter
49 - Thermal Overload
ZS-24 - Position Switch
TS - Torque Switch
LS - Level Switch
631 - MOV-4 Control Switch
645 - MOV-4 Emergency Switch
PS - Pressure Switch

U - Valve Location
L - Load Center Location
R - Reactor Location
RS - Pillbox Location
P - Main Panel Location
X - Pipe Location

Ref. Dwg. 40-E-6, Rev. 3

Fig. 411-1 Schematic wiring diagram for core spray valve MOV-4.

412. FUEL-ELEMENT FAILURE DETECTION

Since the plant uses a direct cycle for power conversion, wherein superheated steam generated in the reactor is piped directly to the turbine, a fuel element failure can be detected by monitoring fission product gases injected into the steam flow due to the failure. The fuel-element failure detection system consists of a dual-channel, gamma spectometer system for monitoring xenon-135, xenon-138, or iodine-135 in the turbine condenser exhaust gases. These same fission product isotopes can be monitored at any of the following plant locations: reactor superheater outlet lines; reactor saturated steam line; reactor purification system ion exchangers; condensate purification system ion exchangers. A schematic diagram of the system is shown on Fig. 802-11; design details of the system are given in subsection 802-C-3.

413. LIQUID WASTE DISPOSAL SYSTEM

All potentially radioactive liquid wastes generated during normal plant operation and during equipment maintenance periods wherein the equipment must be drained for service and repair, are 1) collected, 2) treated if required, and 3) sampled and measured before discharge from the reactor building.

Normally nonradioactive liquid effluents such as those from the sanitary plumbing system, the laboratory cooling water drains, and drinking water fountains are collected in the sewage pump wetwell and discharged intermittently from the containment building into the outside sanitary sewage system without any direct monitoring. However, the outside sanitary sewage system consists of septic tanks with an on-site drainage field and there is no discharge into a public sewer system. Provision is made to permit periodic sampling of the contents of the septic tanks to permit the measurement of the activity levels.

Wastes from the make-up water treatment equipment are discharged directly to the condenser cooling water discharge tunnel. The waste volumes produced during regeneration of these cation, anion, and mixed-bed demineralizers are 1,540, 1,350 and 1,510 gallons, respectively since these wastes are nonradioactive they can be discharged without special monitoring.

The liquid waste disposal system for contaminated wastes shown schematically on Fig. 413-1 is comprised of the five sump pumps embedded in the basement floor, three 4,000-gal waste-retention tanks into which the contents of the sumps are discharged, two motor-driven transfer pumps and an electrically heated evaporator.

Four of the 4-ft-dia., 4 ft-deep steel sump pits (Nos. 1 thru 4) are embedded in the foundation mat, with their tops located at the basement floor level, at the various plan locations shown on Fig. 906-5. The sump pits collect the effluent from the floor drains at the basement floor, at the turbine floor and reactor floor levels, and from the lines connected to equipment drains. Sump No. 5 is 4 ft dia. by 1 ft, 3-1/2 in. deep with a bottom elevation of 6 ft, 0 in. It is of the same material as the other sump pits. Sump No. 5 is used only for draining the water from the moat in the reactor water-circulation pump compartment when this is required for periodic painting or for other maintenance. The pump for this sump is mounted on the grating floor of the pump room at elevation 11 ft, 4 in.

All of the piping (except the retaining wall drain line) is weld-connected to the 1/4-in.-thick sump pits and is located in the sandfill space between the top of the foundation mat (el. 13 ft, 6 in.) and the

underside of the 6-in.-thick concrete basement floor slab (el. 15 ft, 6 in.). Sump Pits Nos. 1, 2, and 3 are connected to the sandfill space by a 2-in. pipe extension with 100-mesh bronze screen on sandfill side and double valves (on the other end) inside the pit. The connection permits draining of the sandfill area of excess water that may get into this space. All drainage piping for floor and equipment drains is butt-welded Schedule 80 steel pipe which is protected against corrosion by coating the outside with coal tar enamel and asbestos felt to produce a protective coating 3/32 in. thick. The 3-in. perforated plastic retaining wall drain ring at el. 13 ft, 3-1/2 in. is connected to Sump No. 3 by a 2 in. Schedule 80 seamless steel line embedded in the foundation mat at el. 12 ft, 10 in. This 2 in. drain line is sealed with a gate valve and a blind flange cap located near the bottom of Sump No. 3. This drain provides a means of detecting the accumulation of any water in the joint between the base mat and the retaining wall.

For those drains handling acids, the piping is saran lined; the drain piping from the floor drains in the make-up water purification and condensate resin regeneration compartments and the drain piping from the sink in the decontamination room are protected in this manner.

Each of the sumps contain a vertical-shaft, single-stage, 50-gal/min-at-60-ft-developed-head, motor-driven, wet-pit, centrifugal pump with sightfeed automatic lubricated bearings (Weinman Pump Model 236MG2-VS-4) which is mounted on the sump pit cover plate. The pumps for sumps Nos. 1, 2, 3, and 5 are alike in design and construction, and each have a cast iron casing, bronze impeller, phosphor bronze shaft, and bronze radial bearing sleeve. Sump No. 4 pump, which can be exposed to dilute solutions of caustic and sulphuric acid from the floor drains in the condensate and make-up water regeneration compartments, is similar in construction except that the pump casing, impeller, shaft and discharge column are Type 316 stainless steel and the radial bearing sleeve is Teflon.

Sumps Nos. 1 thru 4 have 2-in.-thick steel cover plates for protection of the operating staff against radiation exposure in case the liquid contents of the sumps, which are located in nonrestricted areas of the plant, are radioactive. A standard 1/2-in.-thick mounting plate is used for Sump No. 5 since the pump unit serves the moat area.

Each pump is driven by a 1750-rpm, 2-hp, 440-volt, 3-phase, 60-cycle squirrel-cage drip-proof motor, and can be started and stopped locally at the unit and controlled either manually or automatically (except No. 5) depending on the position of the selector switch. Under automatic control, the float-operated switches mounted on each sump pit cover start and stop the pump to maintain the level within preset limits. The electrical schematic diagram for the sump pump control is shown in Fig. 413-2. If the level in any sump gets too high, the condition is audibly annunciated by a bell alarm locally at the high level sump to warn the operating staff to remedy the trouble by either restarting the

unit if stopped or stopping the entry of wastes into the sump. The equipment and service source of the liquid wastes entering each sump tank is shown in Table 413-1.

Table 413-1 THE EQUIPMENT AND SERVICE SOURCE OF THE LIQUID WASTES ENTERING EACH SUMP TANK

		Fluid
Influents to Sump No. 1		
A.	Floor Drains	Spills and cleanup water
B.	Equipment Drains (open)	
	Condenser Hotwell	Condensate
	Turbine LP Packing	Condensate
	Gland Seal Condenser Loop Seal	Condensate
	H_2 Manifold	Moisture
	CO_2 Manifold	Moisture
	Delay Tank Loop Seal	Condensate
C.	Equipment Drains (piped direct)	
	Gland Seal Condenser Tube Side (with sight flow indicator)	Condensate
Influents to Sump No. 2		
A.	Floor Drains	Same as for 1
B.	Equipment Drains (open)	
	Turbine Oil Coolers	Auxiliary cooling water
	Control Air Compressor After Cooler	Auxiliary cooling water
	Service Air Compressor After Cooler	Auxiliary cooling water
	Control Air Receiver Moisture Trap	Moisture in building air
	Service Air Receiver Moisture Trap	Moisture in building air
	Reactor Feedwater Pump Base and Casing Drain (2)	Feedwater
	Cooling Tower Water Chemical Treatment Pump	Water treatment solutions
	Cooling Water Pumps Base and Casing Drain	Auxiliary cooling water
	Floor Drain in Feedwater Heater Compartment	Spills and cleanup water
	Shield Cooling Filters	Shield cooling water
	Shield Cooling Pumps	Shield cooling water
	Shield Cooling Heat Exchanger	Shield cooling water

Table 413-1 (Continued)

Influents to Sump No. 3

A.	Floor Drains	Same as for 1
B.	Equipment Drains (open)	
	Condensate Purification Equipment Components	Condensate
	Seal Water	Demineralizer water
	Condenser Hogging Pump	Condensate
	Air Conditioner No. 1	Auxiliary cooling water

Influents to Sump No. 4

A.	Floor Drains	
	Condensate Resin Reg. Room	Water solutions of NaOH and H_2SO_4
	Make-up Water Treatment Room (note-drains Saran lined)	Water solutions of NaOH and H_2SO_4
	Misc. Floor Drains	Spills and cleanup water
	Sample Funnel Drains	Condensate and reactor water
B.	Equipment Drains (open)	
	Liquid Waste Transfer Pump No. 1	Liquid waste
	Liquid Waste Transfer Pump No. 2	Liquid waste

The effluent pumped by all 5 sump pumps is discharged directly into the retention tanks. Any one of the three, two of the three, or all three retention tanks can be selected for storing the wastes by opening or closing the 4-in. 125-lb carbon steel gate valves, which are chain operated from outside the shield wall. The wastes are piped to the tank top inlet. All of the 4,000-gal vertical retention tanks are alike in design and construction. The 10-ft-dia. 1/4-in.-thick 4-ft, 2-in. high shells and the 3/8-in.-thick, ellipsoidal top and bottom heads are constructed of Type A285 Gr C steel, and the units are internally lined with a 6-mil coating of Lithcote 24 for corrosion protection. The welded units are designed to withstand a hydrostatic test pressure of 50 psig in accordance with ASME Code Section VIII Code for Unfired Pressure Vessels. Surrounding air is induced into the tanks by venting to the building ventilation exhaust system so as to prevent direct venting of radioactive vapors and gases into the working area.

Air-bubble-type level controls are mounted on each tank to locally measure (outside the shielded compartment) the tank level. In addition, a float-operated liquid level switch on each tank initiates the alarm annunciator system on high level.

In addition to the sump pump discharge effluents entering the retention tanks, equipment located at elevation 37 ft, 4 in. and higher drains directly into the retention tank header system. (See Table 413-2).

The largest bulk quantity of liquid waste discharged to the retention tanks when the plant is in service is produced by the regeneration of the condensate demineralizers. To completely regenerate each of the three condensate demineralizers results in a total waste effluent of approximately 2800 gal for 1) resin sluicing to the treatment tanks, 2) backwash separation of resins, acid and caustic regeneration of the cation and ion columns, and 3) rinsing and sluice return to the condensate demineralizer tanks. The wastes, generated over a regeneration cycle requiring approximately 3 hr, are discharged through a 1,000-gal, horizontal, floor-mounted, waste-neutralizing tank to the waste retention tanks.

The waste neutralizing tank (A285 Gr C carbon steel, 4 ft OD, 11 ft, 6 in. over-all length) is designed to withstand a hydrostatic test pressure of 50 psig in accordance with ASME Code Section VIII for unfired pressure vessels. The tank is internally lined with 3/16-in.-thick layer of Hypalon to make it resistant to the caustic and acid solutions entering the tank. The acids and caustic solutions from the regneration process are temporarily stored in the tank and neutralize each other prior to discharge to the retention tanks.

The contents of the retention tanks can be (a) transferred from one tank to another, (b) discharged direct to the sea-water tunnel if the measured activity rate of the sample constituents are below allowable tolerance levels, or (c) fed in small batches to the waste evaporator for further concentration and bulk storage of the residue. Figure 413-3 shows schematically the piping system for the various transfer operations. These various flow-transfer processes can be carried out with either or both liquid waste transfer pumps and the proper selection of the required valves for the mode of disposal of the retention tank contents. The valves are all located inside the compartment housing the transfer pumps and liquid waste evaporator so that the operator does not have to enter the waste storage tank compartment for normal transfer operations.

The liquid waste transfer pumps (Ingersoll Rand Model 1-1/2 RV - 1-1/2) are 50-gal/min, 60-ft-head, horizontal, single-stage units with close-coupled 1-1/2-hp, 440-volt, 3-phase, 60-cycle motor mounted on the same baseplate. Each pump has a cast iron casing, steel shaft, bronze shaft sleeve, bronze impeller, and bronze casing ring. Each unit is furnished with a conventional-type stuffing box to maintain shaft leakage to a minimum. The liquid waste transfer

pumps are started and stopped locally at the units and are in service only intermittently and long enough to carry out the required transfer or retention tank waste disposal. The electrical control diagram for these pumps is shown as Fig. 413-4.

Table 413-2 INFLUENTS TO RETENTION TANKS

A. Pumped Drains	
Sumps 1, 2, 3, 4, 5	
B. Equipment Drains (open)	
Fuel Pool Circulation Pump No. 1	Fuel pool water
Fuel Pool Circulation Pump No. 2	Fuel pool water
Fuel Pool Heat Exchanger	Fuel pool water
Fuel Pool Filters	Fuel pool water
Fuel Pool Resin Column	Fuel pool water
Pressure-Vessel Gasket Leak-off	Condensate
Pressure-Vessel Water Column	Reactor water
Water Column Gage Glass	Reactor water
Demineralized Water Storage Tank	Demineralized water
Air Conditioner No. 2	Auxiliary cooling water
Sample Drains	Main steam, saturated steam, superheated steam individual lines, poison injection solution
Shield Surge Tank and Overflow	Shield water
Emergency Condenser	Demineralized water
Boron Injection Line Low Pt. Drain	Reactor water
1000 Gallon Waste Neutralizing Tank	Caustic and acid solutions
Laboratory Cup Sinks (3)	Laboratory waste solutions
C. Floor Drains (el. 37 ft, 4 in. and above)	Spills and cleanup water

---

The treatment of the liquid wastes to reduce the activity in the waste discharged into the sea-water tunnel is accomplished in the liquid waste evaporator. The kettle unit consists of a 10-gage stainless-steel lower section, with a 30 in. ID 15-3/4-in. shell and

hemispherical bottom, and an upper 43-in.-high shell portion bolted to the lower member flange. The upper shell cover supports the 3-hp, 440-volt, 3-phase, 60-cycle gear motor-driven agitator, and contains the four electrode probes for indicating water level and for controlling the operation of the 18 kw capacity three-phase sheath heaters anchored to the outside of the bottom hemispherical head. Heat losses from the heaters to the outside is minimized by a bolted radiant reflector shell which in turn is jacketed with a removable 2-in.-thick thermal insulation.

The evaporator operates semi-automatically under control of a panel unit which is wall mounted outside the shield enclosure. The boil-up rate of the unit can be adjusted by means of a control timer which automatically turns the heaters on for a preselected fraction of a 30-sec. timer cycle. If the level is either too high or too low, or if the heater temperature is too high, the unit is automatically stopped and audible alarms are actuated. The details of the heater and alarm circuit is shown schematically in Fig. 513-5.

The evaporator shell is equipped with a small tank and level indicator for the manual addition of anti-foaming agents as required during evaporation.

The rated 50 lb/hr of steam generated in the kettle is condensed in a shell and tube heat exchanger mounted on the top cover of the integrally-connected 4-ft-dia. 200-gal stainless-steel water storage tank. The stored condensate can then be batch-discharged by the transfer pump to the discharge tunnel if the activity levels are below tolerance levels.

The liquid waste evaporator is designed so that the residue or concentrate in the jacketed kettle can be discharged to a 50-gal drum and then cement-solidified prior to storage in the dry waste storage shielded compartment.

All liquid wastes discharged to the sea-water tunnel from the liquid waste system flow through a flow-integrating meter and an air-operated 3-in. pilot solenoid valve which automatically closes when the signal to isolate the building is received. The flow integrator is provided to account for all wastes processed and discharged.

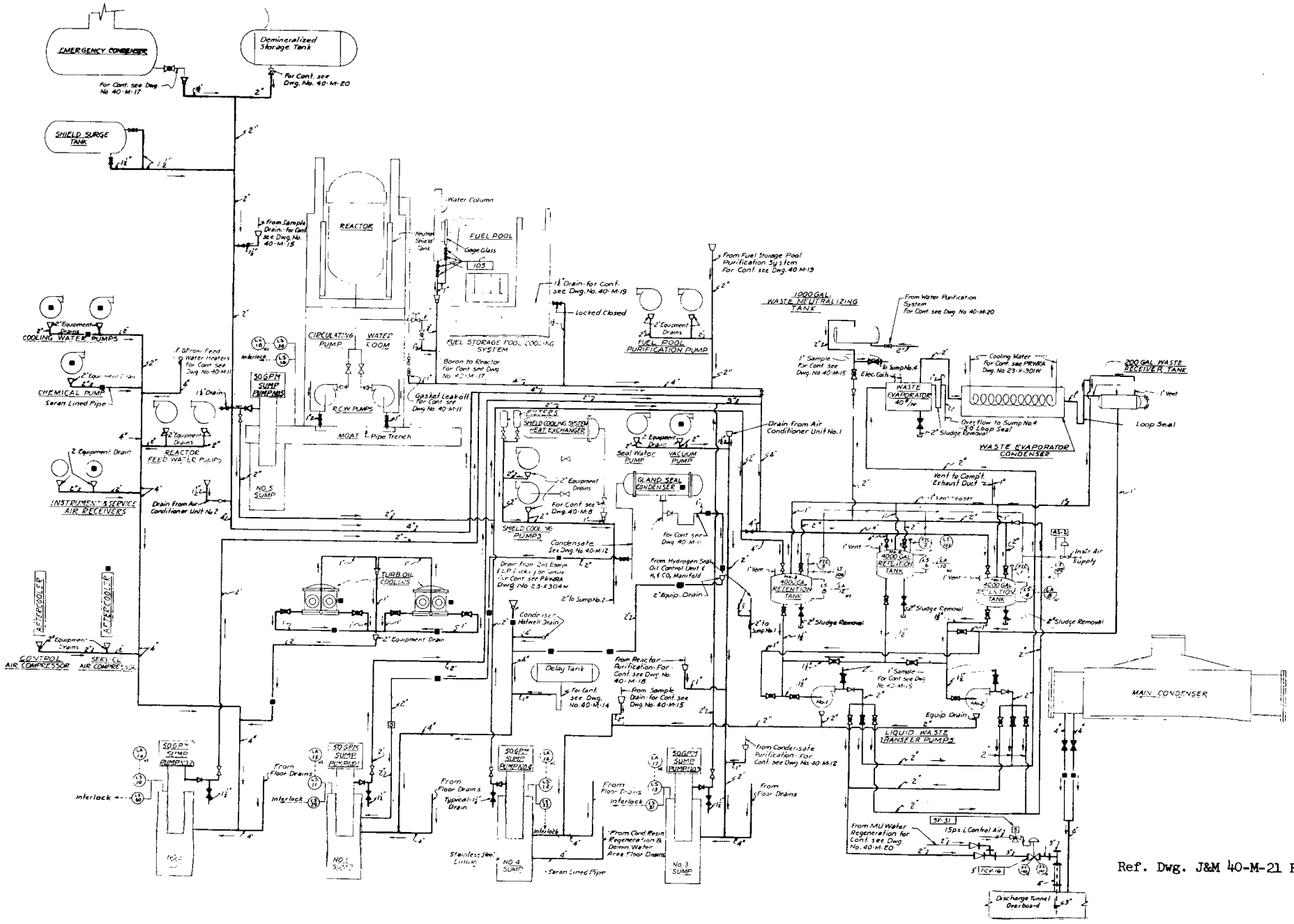

Fig. 413-1 Schematic diagram of liquid waste disposal system.

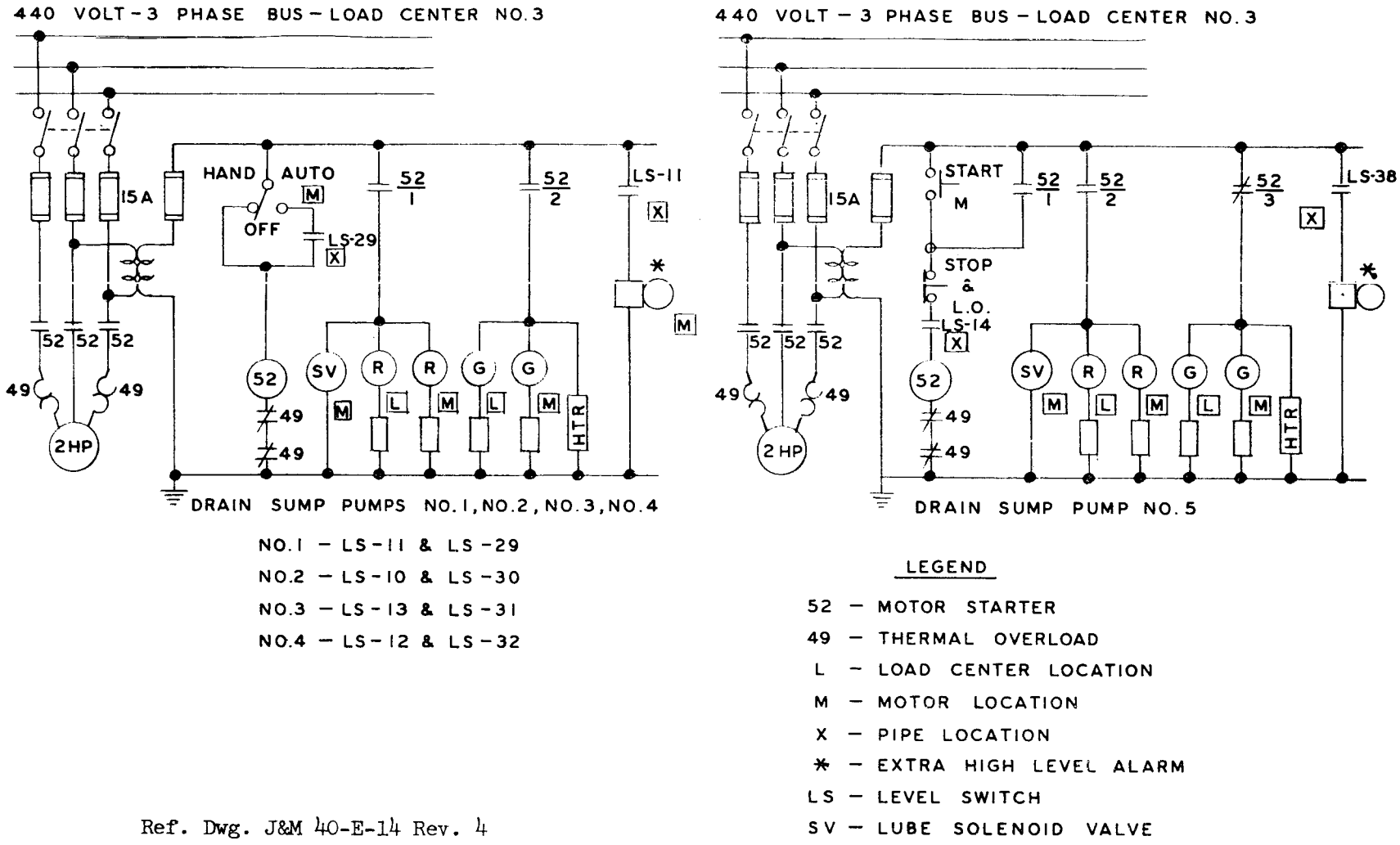

Ref. Dwg. J&M 40-E-14 Rev. 4

Fig. 413-2 Schematic diagram of electrical control of sump pumps.

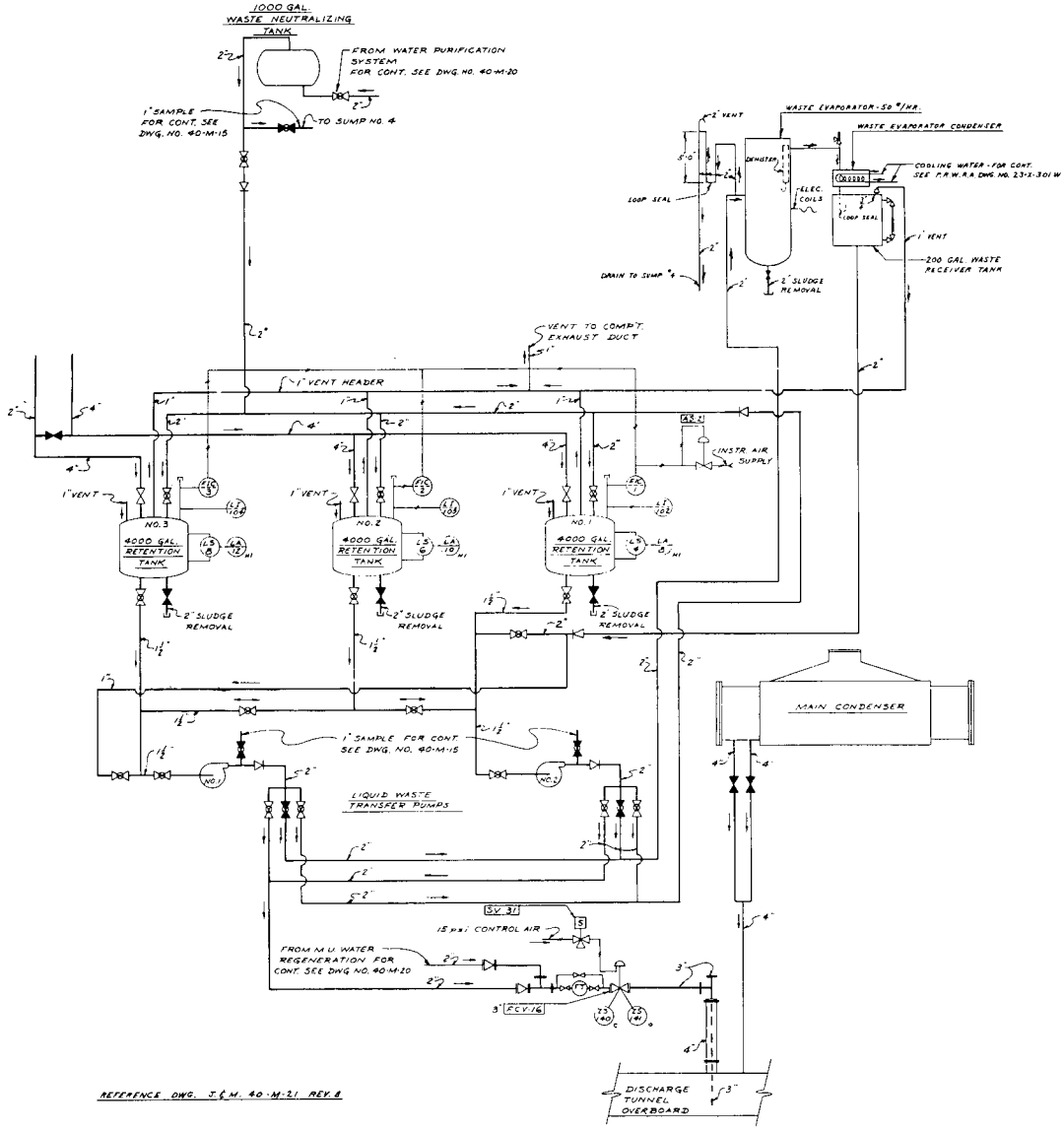

Ref. Dwg. J&M 40-M-21 Rev. 8

Fig. 413-3 Schematic diagram of piping of liquid-waste-transfer system.

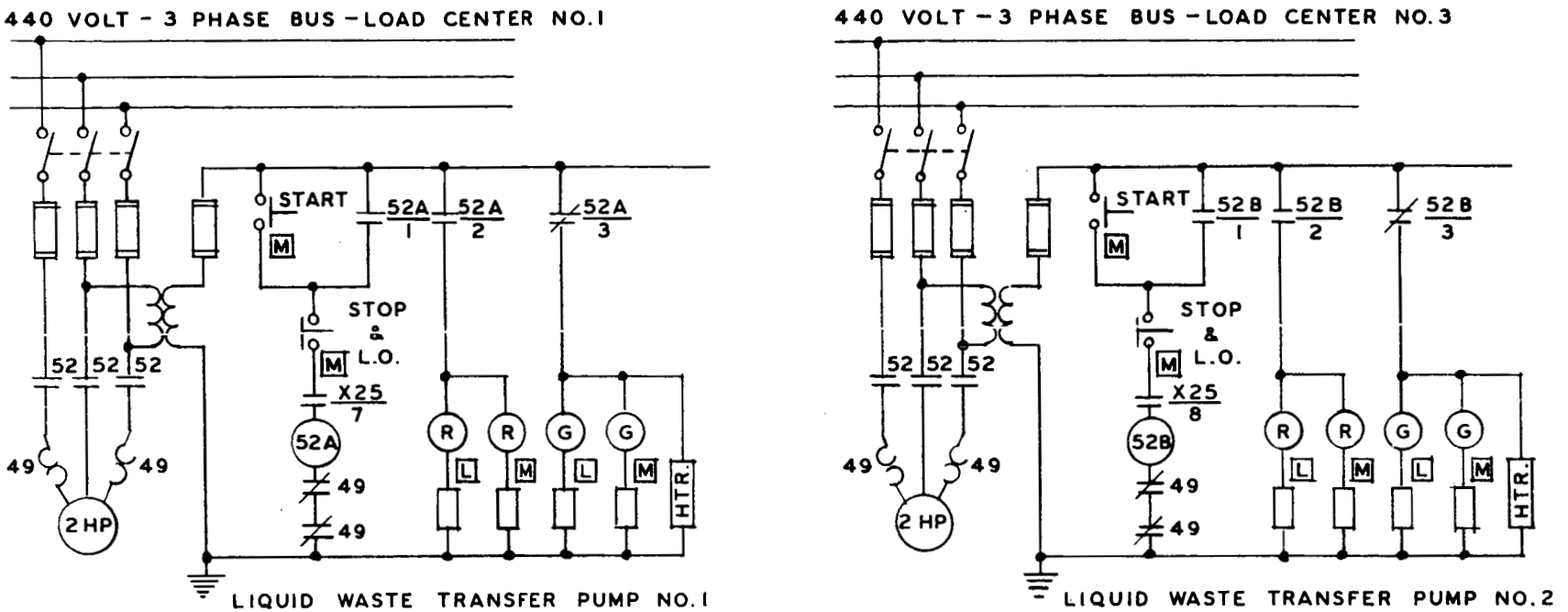

Ref. Dwg. J&M 40-E-13 Rev. 2

LEGEND

52A – PUMP NO.1 MOTOR STARTER
52B – PUMP NO.2 MOTOR STARTER
49 – THERMAL OVERLOAD
[L] – LOAD CENTER LOCATION
[M] – MOTOR LOCATION
X25 – BLDG ISOLATION VALVE INTERLOCK

Fig. 413-4 Schematic diagram of electrical control of liquid-waste-transfer pumps.

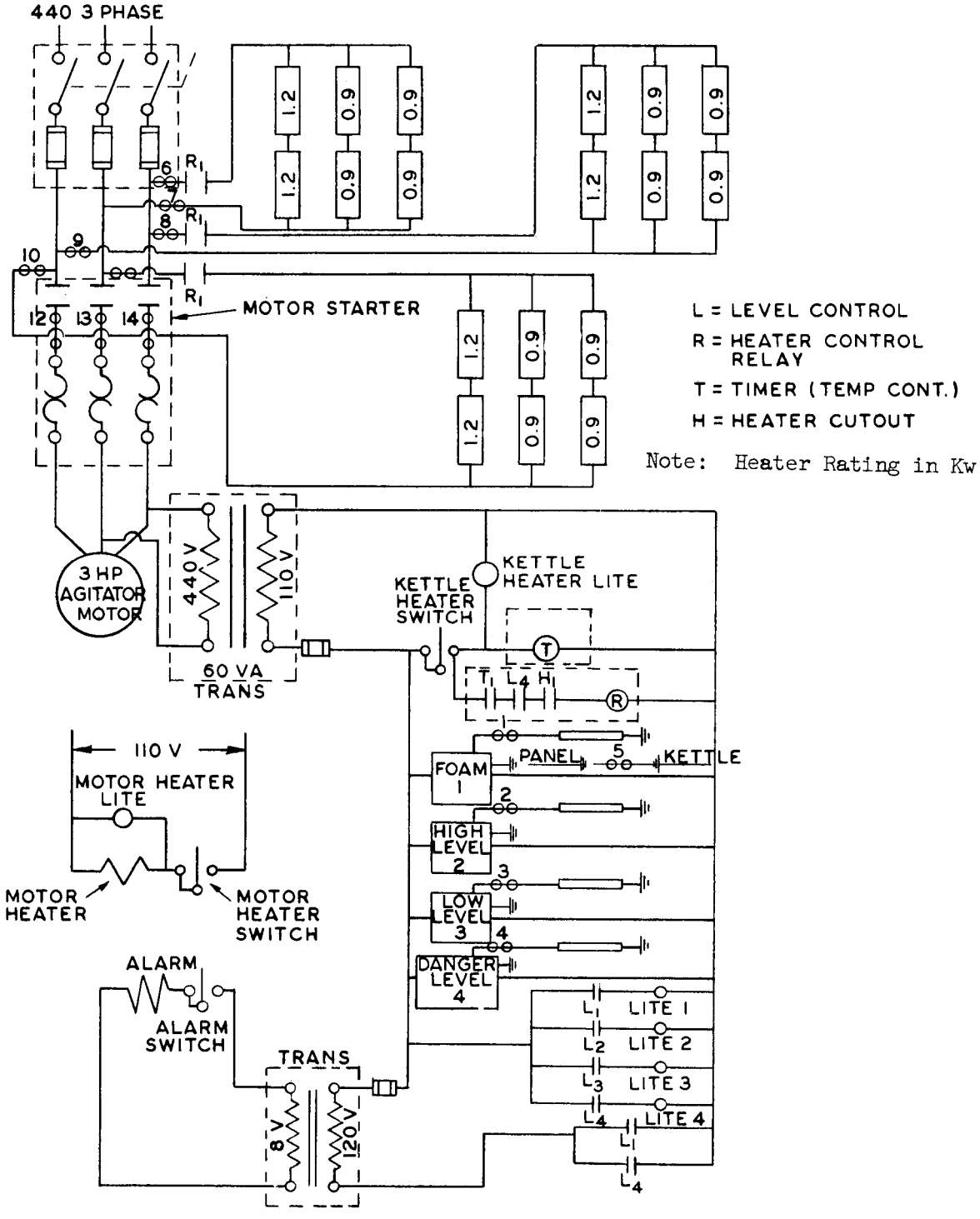

Ref. Dwg. AQUA. CHEM. 627-618-D

Fig. 413-5 Schematic diagram of electrical control of liquid waste evaporator.

414. SOLID WASTE HANDLING AND STORAGE

Two methods of handling solid waste can be used in the BONUS plant; baling and drum storage.

The baler (American Baler Model AD-30) is used to reduce the volume of compressible wastes such as low-level-activity contaminated paper, cloth, air filters, etc., for more economical storage and shipment. It is a small high-compression unit with a hydraulic ram capable of exerting 15 tons or more total compressive force. The baling chamber is approximately 30 in. long x 16 in. wide x 48 in. high and is equipped with a front feed door and retractable ends to permit wrapping of the finished bale. The density of a finished bale of paper produced by this unit will be approximately 33 lb/cu ft. Power for the hydraulic ram is supplied by a hydraulic pump driven by a 3-hp motor. Controls for the press are locally mounted on the frame of the baler.

For initial operation, the completed bales of compressible waste will be stored in the hot waste storage area inside the building until enough material has been accumulated for an economical off-site shipment to a permanent waste disposal area.

After the plant has been in operation several years the accumulation of other solid wastes in the hot waste area may make it necessary to store the paper wastes outside the building in weatherproof steel bins prior to off-site shipment.

The hot waste storage area is to be used primarily for rather heavily contaminated solid wastes which must be stored in a shielded area prior to shipment. The hot waste storage area is a concrete compartment 11 ft wide, 16 ft, 5 in. long, and 17 ft, 7 in. high with walls of ordinary concrete 3 ft, 6 in. thick. The top of this compartment is made of overlapping, removable concrete plugs and removable concrete beams. The concrete beams are spaced far enough apart to permit vertical drum guide tubes made of 26-in. spiral welded steel pipe to be installed side by side in rows across the storage areas. Standard 55-gal waste drums with lifting hooks attached may be stacked 6 drums deep in any one of the 30 guide tube positions by removing the two concrete plugs and the short beam between them and lowering the filled drums into the storage tube.

The hot waste storage area will normally receive wastes from the following sources: Spent reactor purification ion exchangers; spent filter cartridges from reactor and condensate purification systems; contaminated resins from the condensate purification beds; contaminated charcoal beds; solidified waste concentrate from the liquid waste evaporator; and baled combustible wastes. Although it is impossible to accurately predict the volume of solid wastes likely to be generated in a given period of time, the estimated maximum quantities expected from various sources are shown in Table 414-1. Since the waste storage

area will hold 180 standard 55-gal drums, it will provide waste storage capacity for roughly 7 years of operation without any shipments. As the waste storage area approaches its capacity limit, arrangements will be made for off-site shipments to permanent disposal areas or for additional storage of intermediate wastes outside the building.

Table 414-1. ESTIMATE OF RATE OF GENERATION OF SOLID WASTES

Waste Source	Quantity of Waste (55-gal drums/yr)
Filters (Condensate, Reactor, and Pool)	5
I. X. Resins	4
Charcoal Traps	1
Liquid Waste Concentrate	6
Baled Paper Waste	7
Miscellaneous, Air Filters, etc.	2
Total Estimated	25 drums/yr

For the transfer of contaminated resins and filters from operating units to waste storage, a shielded waste transfer cask is used. This cask has 4 in. of lead shielding supported by 1/2-in. steel plate, and weighs approximately 13,000 lb. It is made in two sections as indicated in Fig. 414-1. The interior of the cask is 26 in. in diameter and 44 in. high, large enough to completely enclose a standard 55-gal steel drum with lifting lugs attached.

When contaminated filters or disposable resin baskets are to be replaced, the sequence of operations is as follows. The lead shielded top cover is lifted from the unit to be serviced. The upper section of the waste transfer cask is quickly moved into position directly over the open unit and is lowered until it fits closely against the top flange of the open unit. A sectionalized latching bar is then inserted through the center opening in the top of the transfer cask with a lifting socket and cable assembly attached. It is then lowered until the lifting socket attached to the end of the latching bar engages the lifting plug on the top surface of the basket or filter assembly to be removed. To provide the necessary length to reach the lower baskets in areas where head room is limited, additional sections may be attached to the lifting bar as it is lowered. With the lift socket firmly latched to the removable basket, the latching bar is removed and vertical lifting force is applied through a hand winch attached to the top of the cask; the basket is then raised up into the transfer cask. The waste cask top section with the basket held inside is then moved to a position directly over an empty drum resting on the bottom section of the waste cask. As the top section of the waste cask is lowered over the drum, the resin basket will come to rest inside the drum. The resin basket is lowered to the bottom of the drum and the lifting socket is delatched allowing the cable and socket assembly to be withdrawn out of the cask.

Once a drum has been loaded it is carried inside the waste cask to the hot waste storage area and deposited in one of the drum guide tubes mentioned earlier. This operation is quite similar to basket removal operation except that a single long section of pipe connected to a drum lifting head is used for lowering the loaded drums into the drum guide tube.

Contaminated resins from the condensate demineralizers can be sluiced directly into closed drums placed inside the waste cask or directly into a special closed drum-guide tube equipped with end cover plates. Water is pumped through the condensate beds carrying the resin out of the demineralizer units and into the waste drum through a 2-in. flexible hose attached to the sluicing lines. Inside the drum the resin particles settle to the bottom and the sluicing water passes out through the overflow line to the liquid waste sumps. A resin level indicator is provided in the overflow line to warn the operator when the drum is nearly full of resin. After excess water has been siphoned from the drum, the resin transfer lines are disconnected and the loaded drum is placed in the hot waste storage area.

Residues from the liquid waste evaporator are not normally expected to be hot enough to cause serious handling problems. The concentrated waste from the evaporator will be drained into a drum and allowed to solidify. If the radiation level at the surface of the drum is significant, the loaded drum will be placed in the hot waste storage area.

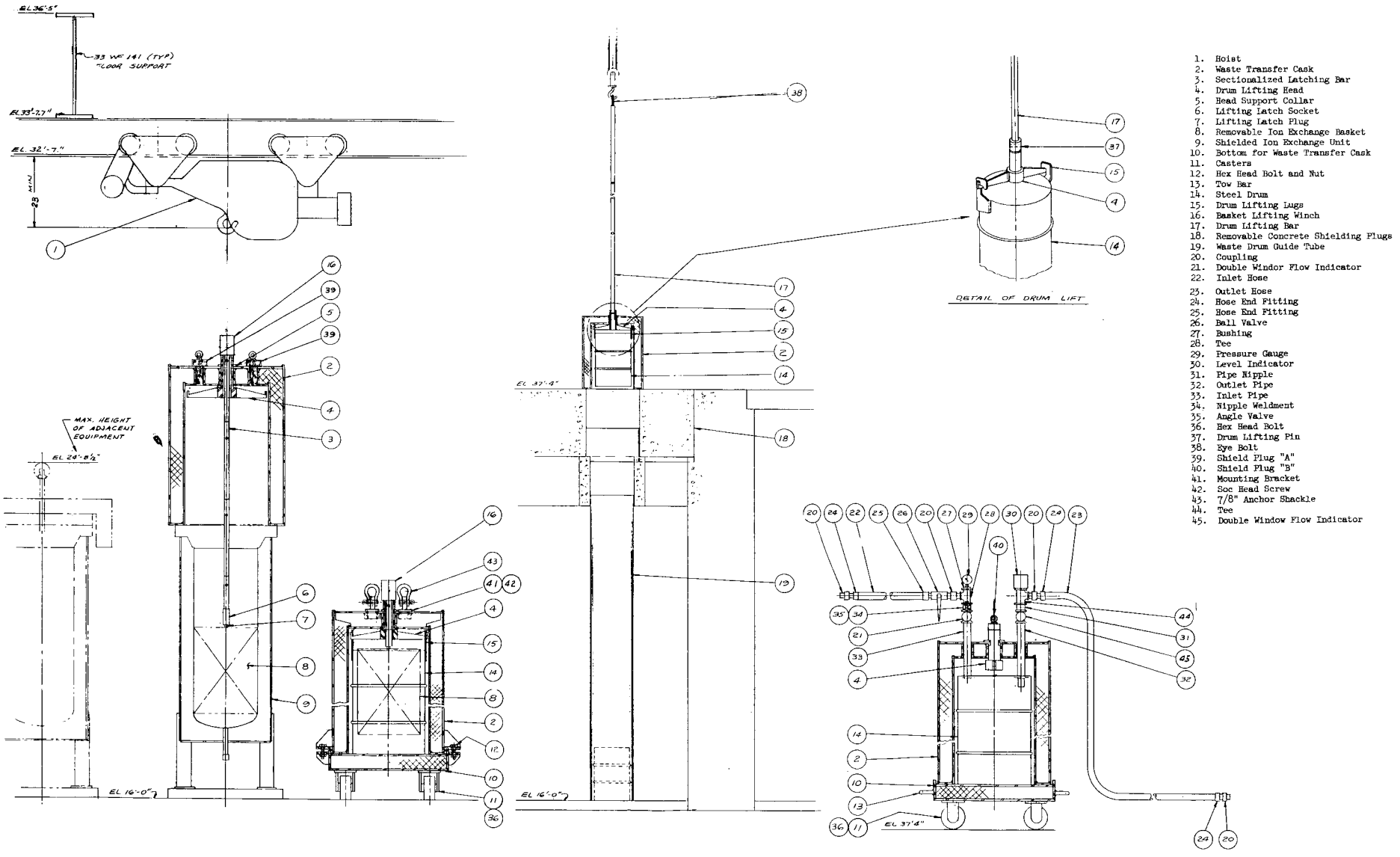

1. Hoist
2. Waste Transfer Cask
3. Sectionalized Latching Bar
4. Drum Lifting Head
5. Head Support Collar
6. Lifting Latch Socket
7. Lifting Latch Plug
8. Removable Ion Exchange Basket
9. Shielded Ion Exchange Unit
10. Bottom for Waste Transfer Cask
11. Casters
12. Hex Head Bolt and Nut
13. Tow Bar
14. Steel Drum
15. Drum Lifting Lugs
16. Basket Lifting Winch
17. Drum Lifting Bar
18. Removable Concrete Shielding Plugs
19. Waste Drum Guide Tube
20. Coupling
21. Double Windor Flow Indicator
22. Inlet Hose
23. Outlet Hose
24. Hose End Fitting
25. Hose End Fitting
26. Ball Valve
27. Bushing
28. Tee
29. Pressure Gauge
30. Level Indicator
31. Pipe Nipple
32. Outlet Pipe
33. Inlet Pipe
34. Nipple Weldment
35. Angle Valve
36. Hex Head Bolt
37. Drum Lifting Pin
38. Eye Bolt
39. Shield Plug "A"
40. Shield Plug "B"
41. Mounting Bracket
42. Soc Head Screw
43. 7/8" Anchor Shackle
44. Tee
45. Double Window Flow Indicator

FIG. #1
BASKET LIFTING OPERATION
SCALE: 1"=1'0"

FIG. # 2
BASKET CARRYING OPERATION
SCALE: 1"=1'0"

FIG. # 3
DEPOSITION OF FILLED DRUMS IN WASTE PIT
SCALE: ½"=1'0"

FIG. # 4
DEPOSITION OF WASTE RESIN IN DRUM
SCALE: 1"=1'0"

Fig. 414-1 Waste transfer cask.

415. SEAL WATER SUPPLY SYSTEM

Pressurized, filtered, condensate is normally pumped into the mechanical shaft seal on each of the two reactor water-circulation pumps and on the 17 control-rod drives to keep the shaft seals cool and to prevent leakage of contaminated water from the reactor system to the surroundings. The seal injection system pump is also used periodically to pressurize the reactor vessel for hydrostatic tests for replacement gasket checkout. Approximately 5.6 gal/min of 140°F maximum seal injection water is required for the pumps and control-rod seals with the major quantity, 3 gal/min, going to the control-rod drive seals. The seal outleakage water is collected and returned to the main condenser via a vented gravity collection tank equipped with a level controlled drain valve (LC-10 and LCV-10). The schematic piping, components and instrumentation for the seal water supply system are shown on Fig. 415-1. The collection tank is shown schematically in Fig. 506-1.

The seal water is normally supplied by a positive-displacement seal water injection pump with the seal water flow regulated by a differential pressure control valve in the pump discharge circuit with the pump suction supplied from the condensate system downstream of the condensate purification system afterfilters. For operation with the condensate pumps not in service during startup and shutdown, an alternate supply of demineralized makeup water from the storage tank is automatically brought into service and directed to the seal pump suction if the water pressure available from the condensate line drops below 15 psig. The backflow of the seal system water into the demineralized water storage tank during normal operation is prevented by a self-powered pressure control valve (PCV-3) and by a check valve downstream of PCV-3. For the case when the seal pump must be shut down for maintenance, or electric power failure, the reactor purification system can supply cool water to the seal system at a pressure approximately 50 psi above reactor pressure. The cooled reactor water from the secondary cooler outlet flows through a seal water filter before it enters the seals.

The seal water pump (Manton-Gaulin Mfg. Co. Model 600-HP-KL6-3PSX) is a triplex reciprocating plunger type with multi-V-belt drive and is rated at 10 gal/min capacity at 1725 psig discharge pressure. The pump is driven by a 15-hp, 1800-rpm, 220/440-volt squirrel cage induction motor, and the eccentric shaft which drives the pistons rotates at 147 rpm. The pistons are 1-7/16 in. in diameter with a stroke of 3-3/8 in. Most of the wetted parts of the pump head are of 300 series stainless steel Types 302, 303 or 304. However, the packing adjusting rings are of Type 430 B bronze; the packing is a Teflon-asbestos compound. The high-pressure gaskets are tapered rings of dead soft copper. The pistons are equipped with double stuffing box seals with leakoff connections between the two seals piped to an equipment drain. Baffle seals and closure seals are provided on the piston drive plungers to insure against oil contamination of the water being pumped.

The emergency seal water filter in the supply line from the reactor purification system is a 5-micron disposable-cartridge unit similar to the No. MK 125 - series 1H manufactured by the Cuno Corp. and contained in a Type 304 stainless-steel casing.

Seal injection pressure is automatically controlled by a differential-pressure air-operated control valve (D/PCV-1) regulated by a differential pressure control (D/PC-1) which maintains a constant differential pressure of 50 psi between the seal water header and the reactor vessel liquid level column. Any excess water delivered to the seal header above that amount required to make up seal leakage is automatically returned to the seal pump suction by D/PCV-1. In case of malfunction of D/PCV-1, the bleed back will be accomplished by a spring-loaded relief valve set to open at 2000 psig.

The seal injection pump motor is started and stopped from the main control panel (Section D - Figure 803 B-5). Figures 415-2 and 415-3 show schematically the control circuit for the pump motor unit and the transfer valve circuit for automatically switching to seal water supply from the purification system.

Water from the reactor purification system may be admitted to the seal water header by opening valve FCV-17. This can be accomplished by manual operation of switch 210 on section D of the main control panel. It will also occur automatically if the differential pressure between the seal header and the reactor drops below 50 psi. Indicating lights are provided to show the position of FCV-17 at all times.

Annunciators are provided in the main control room to warn the operator if the seal injection pump is not running and if the seal water differential pressure is either too high or too low.

The piping to the pump suction from the various supply sources, the demineralized water storage tank and condensate header, and the discharge piping from the pump to the various seals is Schedule 80 carbon steel. Similarly, the piping from the purification system to the seals is also carbon steel as is the leak-off piping from the seals back to the condenser. (See Section 400.1, Table 400.1-1).

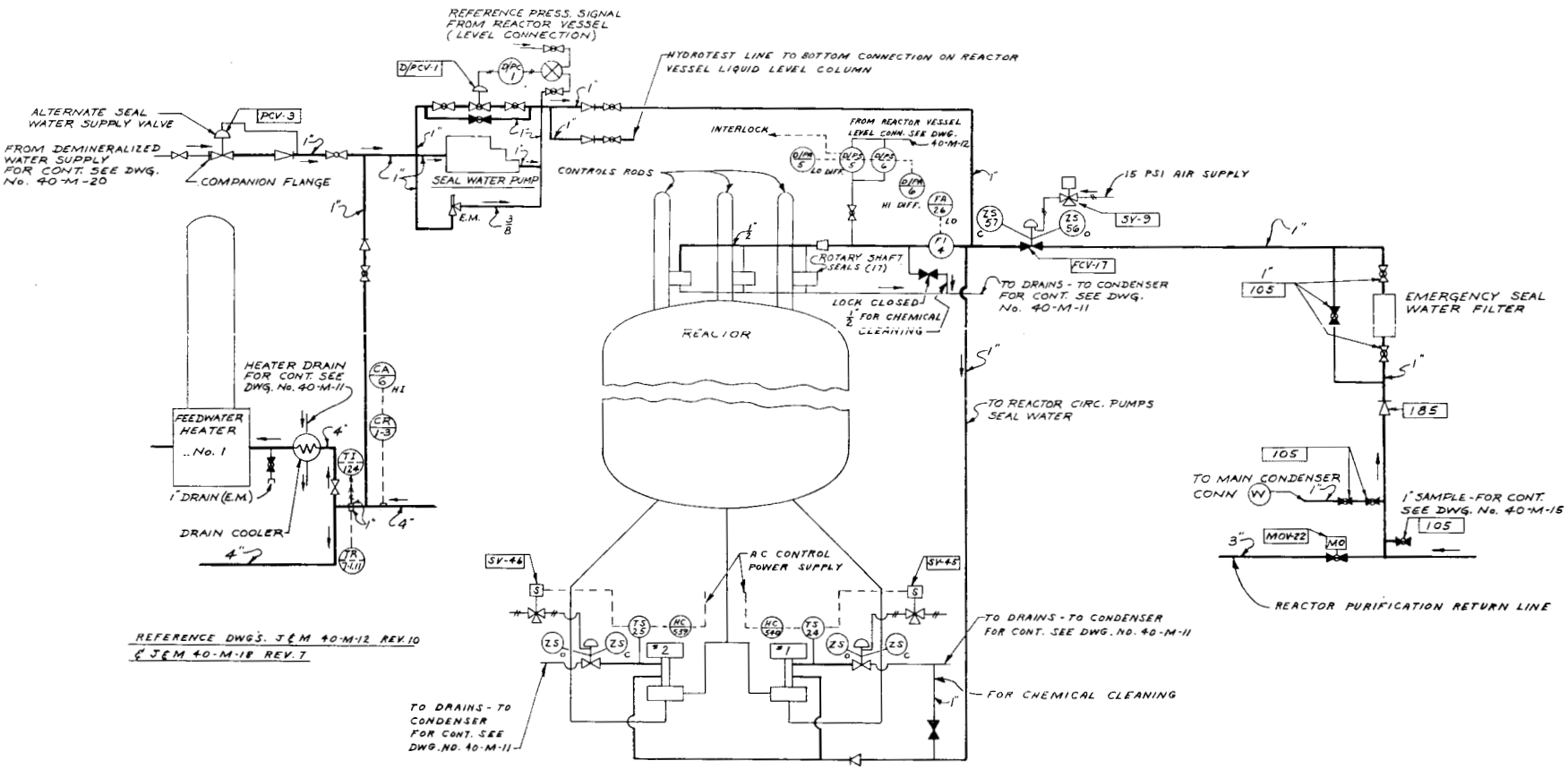

Fig. 415-1 Seal water supply system.

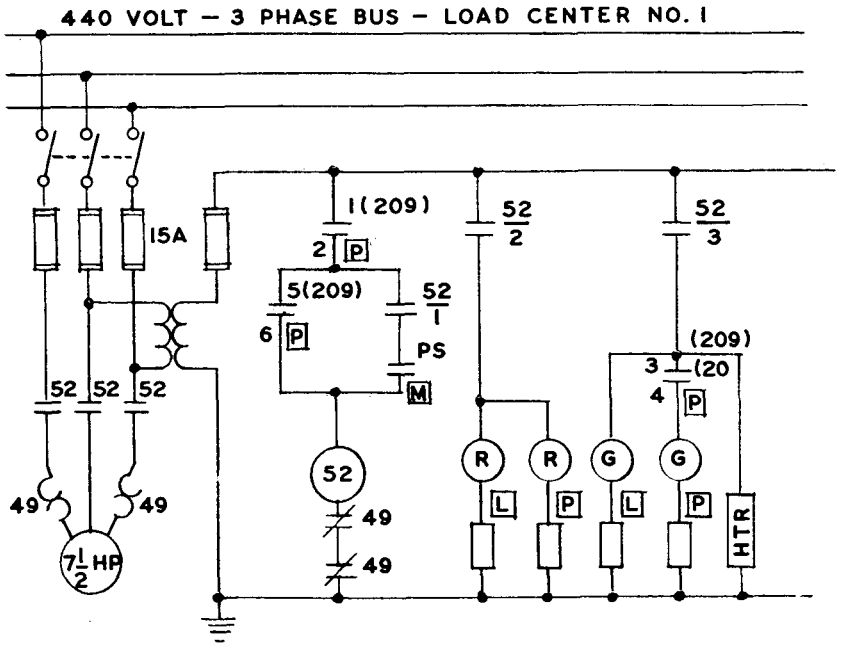

SEAL WATER PUMP
CONTROL SWITCH DEVELOPMENT

CONTACTS	POSITIONS			
	START	CENTER	STOP	L.O. ON STOP
1 – 2	X	X		
3 – 4	X	X	X	
5 – 6	X			
7 – 8	X	X		



NAMEPLATE
FRONT VIEW

SPRING RETURN TO CENTER, FOR L.O. TURN TO STOP AND PULL OUT.
"X" INDICATES CONTACTS CLOSED.

LEGEND

209	SEAL WATER PUMP CONTROL SWITCH
52	MOTOR STARTER
49	THERMAL OVERLOAD
P	MAIN CONTROL PANEL LOCATION
L	LOAD CENTER LOCATION
M	MOTOR LOCATION
PS	PUMP LUBE OIL PRESSURE SWITCH

Ref. Dwg. J&M 40-E-14 Rev. 4

Fig. 415-2 Schematic diagram of electrical control for seal water pump.

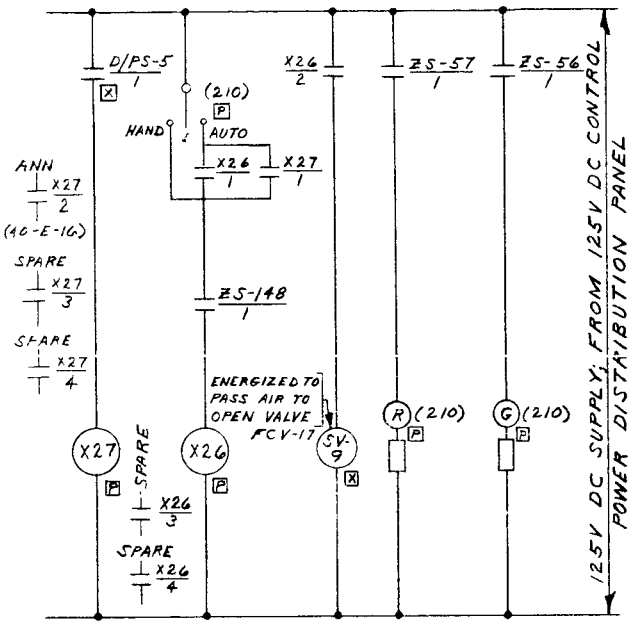

REFERENCE DWG. J & M 40-E-15 REV. 2

LEGEND

(SV 9)	ACTUATING COIL SOLENOID VALVE 9
(X26)	RELAY COIL, AUX. RELAY 26
d/PS-5	DIFFERANTRAL PRESSURE SWITCH NO. 5
(210)	PRIMARY CONTROL, SELECTOR SWITCH
ZS-56	POSITION SWITCH
[P]	MAIN CONTROL PANEL LOCATION
[X]	DEVICE LOCATED ON PIPE

CONTROL SWITCH DEVELOPMENT

CONTACT	VALVE POSITION	
	FULLY OPEN	INTER
1	X	
2		X

FOR -57

CONTACT	VALVE POSITION	
	FULLY CLOSED	INTER
1	X	
2		X

FOR -56 & 148

X DENOTES CONTACTS CLOSED

Fig. 415-3 Control schematic for seal water back-up valve FCV-17.

500. POWER PLANT

501. GENERAL

The power conversion cycle and equipment used for the BONUS plant are essentially the same as those used for a conventional power plant. The heat balance diagram at rated load shown in Fig. 501-2 indicates the cycle performance; Fig. 501-3 illustrates the simplified flow cycle. As indicated in Fig. 501-3, the plant uses a conventional regenerative steam cycle with four closed feedwater heaters and a standard two-pass shell-and-tube condenser cooled with sea water.

Steam from the reactor passes through a spray type attemperator for fine temperature adjustment, and then flows directly into the turbine. Condensate is taken from the condenser hotwell by the condensate pumps and is pumped through the air ejector aftercoolers, the gland seal coolers, the condensate purification units, and the three low-pressure feedwater heaters, to the main feed pumps. The feed pumps increase the pressure of the condensate to approximately 1060 psig, and force it through the high-pressure feedwater heater and the feedwater regulating valve back into the reactor.

The main steam piping system, extraction steam piping, and pressure relief piping are shown schematically in Fig. 501-1. As indicated in Fig. 501-1 there are seven 3-in. superheated steam lines which connect the large reactor vessel outlet nozzles with the 10-in. main steam header. Each of these lines is equipped with angle valves which are used to isolate sections of the superheater during unflooding operations and which may be used to trim the flow through the various banks of superheater assemblies if necessary. The 3-in. outlet lines are equipped with flow and temperature monitoring instrumentation to warn the operator of any abnormal conditions in the outlet steam (see Section 803). Each line has a thermocouple connected to a multipoint temperature recorder (TR-1). This recorder is arranged to trip an annunciator if any of the recorded temperatures exceed the preset limit. Each line also is equipped with an independent thermocouple connected to individual outlet steam temperature indicators on the main control panel. Local temperature limit switches are also installed in each line which will scram the reactor if the steam temperature exceeds 950°F. The steam line size is increased to 5 in. at the point where the temperature elements are mounted. The steam flow in each line is recorded on a multipoint recorder. Each flow transducer is equipped with a low flow switch which trips an annunciator on the main control panel if the flow drops below a preset limit.

In addition to the seven 3-in. steam lines leaving the vessel there are four 2-in. lines which connect to a 4-in. subheader. This subheader is, in turn, connected to the 10-in. main steam header by a single 4-in. line. Steam temperature in each of the 2-in. lines is monitored by a single channel recorder. A temperature alarm circuit is installed in parallel with each recorder to provide a pre-scram alarm if the steam temperature exceeds a preset limit. Individual thermal limit switches are also installed on the 2-in. lines which will scram the reactor and

trip an annunciator if the temperature exceeds the preset scram limit. Steam flow in the 2-in. lines is recorded on single channel recorders and individual low flow alarms are provided similar to those used for the 3-in. lines.

The 4-in. line which delivers the combined steam from the four 2-in. lines to the main steam header is equipped with flow and temperature instruments similar to those used on the seven 3-in. lines except that the thermal scram limit circuit and low flow alarm circuits are omitted.

Individual steam sampling connections are provided on all eleven superheated steam lines leaving the reactor vessel. These lines connect to a common sample cooler so that any given line may be sampled (see Fig. 501-4). (Sampling connections are also provided on the main steam line leaving the main steam header and on the 6-in. saturated steam line leading to the safety relief valves described later in this section).

An 8-in. main steam line connects the main steam header with the turbine. A drop leg consisting of a capped section of 14-in. pipe is installed at the first 90° turn in the main steam line downstream of the main steam header. This leg is equipped with a gage glass and a trapped drain leading to the main condenser. During unflooding of the superheater, water blown from the superheater assemblies will be collected in the drop leg and slugging of water through the main steam line and turbine by-pass system will be minimized.

Just upstream of the drop leg are taps for the main steam temperature recorder, (TR-6), instrumentation for measuring differential pressure between saturated steam pressure and superheated steam outlet pressure, and a 1-in. steam supply line to the gland seal system and the air ejectors. The differential pressure instrumentation includes the following main panel mounted devices, (a) dP indicator, (b) dP recorder, (c) dP pre-scram alarm, (d) dP alarm-scram.

Downstream of the drop-leg is the main steam stop valve (MOV-1). This valve is used to isolate the reactor system in emergencies. It is an 8-in., 1500-pound, outside stem and yoke, gate valve, Powell Fig. 1323-W.E., with a chrome-moly steel body (ASTM A-217 Gr. WC6), designed for 950°F and 1150 psig. This valve is manually controlled from the main control panel. (See Fig. 501-5 for control schematic). The valve is equipped with position interlocks so that if the valve leaves the full open position, the reactor is automatically scrammed, an annunciator on the main panel is tripped and the emergency condenser is automatically actuated. The motor operator on this valve is capable of closing the valve in 60 seconds with 1150 psi differential pressure across the gate. The 60-sec closing time allows time for the minimum flow valve (PCV-2) to complete its initial blowdown-cooling cycle before MOV-1 closes.

Downstream of the main steam stop valve is an attemperator which provides fine temperature control for the steam delivered to the turbine. The attemperator system includes a single stage Schutte and Koerting spray nozzle supplied with water from the discharge side of the main

feed pumps through a temperature control valve (TCV-1), TCV-1 is controlled by the main steam temperature recording controller (TRC-1) in the main control room. The attemperator is capable of adding a maximum of 5000 lb/hr of feedwater to the main steam for temperature control. Effective atomization and accurate temperature control are obtained with main steam flows ranging from 25% to 100% of full rated flow.

The following instrumentation and controls are connected to the main steam line between the attemperator and the turbine trip valve: (a) main steam pressure indicator PI-2, (b) main steam flow measuring system, with pressure and temperature compensating devices, and high and low flow alarm-scram circuits, (c) main steam temperature recording system with high and low temperature alarms and attemperator valve controls, (d) pressure sensing equipment for pressure control of the turbine admission valves or the by-pass valves, (e) turbine stop valve upstream pressure indicator and high pressure alarm, (f) local turbine panel instruments for measuring temperature and pressure in the main steam line.

The lines for the turbine by-pass system are connected to the main steam line between the main steam flow meter (FR-6) and the turbine trip valve. A 4-in. by-pass line is connected to the minimum flow valve (PCV-2) and a 6-in. line is connected to the three-way by-pass valve (PCV-1A) mounted directly in the main steam line. The operation of the by-pass system is described in Section 503.

The turbine trip valve is mounted in the main steam line just upstream of the point where the main steam line enters the turbine. It provides rapid shut-off of the steam flow to the turbine to prevent overspeed of the turbine in case of loss of turbine load, governor malfunction, etc.

Extraction openings are provided in the turbine for four stages of extraction. Steam from these extraction points is delivered to the feedwater heaters by the four extraction steam lines. Two openings are provided in the turbine for the low pressure extraction stage (#1) and the steam lines connected to these openings join to form a single extraction line shortly after leaving the turbine. The extraction line sizes are indicated in Fig. 501-1. Each of the four main extraction lines is equipped with thermocouples connected to a multipoint recorder (TR-7) in the main control room. Pressure gages mounted on the local turbine panel are also connected to each extraction line and manual shut-off valves in each line provide a means of cutting off the flow of steam to one or more of the feedwater heaters if necessary. Non-return valves are provided in extraction lines #4, #3 and #2. These valves are interlocked with the turbine trip valve to automatically close when the trip valve closes. They are also individually tripped if the water level in a given feedwater heater exceeds the preset limits. Once these non-return valves have been tripped they remain closed until their trip mechanisms have been manually reset. A manually operated dump valve is provided with each non-return valve. This dump valve allows the operator to manually close the non-return valve to check its operation without tripping it. When the dump valve handle is released the non-return valve

returns to the normal cocked position. Local instrumentation is connected to the extraction lines near each feedwater heater to indicate the temperature and pressure of steam near the feedheaters. These gages are mounted on a local panel outside the shielded compartment.

A single 6-in. saturated steam line connects the reactor vessel with the safety relief valves. In addition to the connections mentioned earlier for sampling lines and differential pressure instrumentation, a 1-in. line equipped with an air operated valve (FCV-6) is connected to the saturated steam line to supply steam to the gland seal system during start-up operations.

As a final means of protecting the reactor vessel from excessive stress, conventional pop safety valves are connected to the 6-in. saturated steam line from the reactor pressure vessel. These safety valves meet ASME Code requirements and are designed to operate satisfactorily with a high back pressure in the safety valve discharge header. To minimize the undesirable effects which would result should one of these valves fail in the open position, the desired relieving capacity is achieved through the use of three independent valves each capable of discharging approximately the same quantity of steam per hour. The total relieving capacity of all of these safety valves is equal to 130% of the steaming rate at full-rated power output. The set pressures for the valves are staggered: the first valve is set to open at 1050 psig and has a rated discharge capacity of 63,476 lb/hr; the second valve opens at 1100 psig and has a capacity of 65,458 lb/hr; the third valve opens at 1150 psig and has a capacity of 69,440 lb/hr. Steam released by the safety valves is vented to the main condenser via the desuperheater. Each safety valve is equipped with limit switches which indicate valve position and which will trip annunciator H-33 and scram the reactor if the valve leaves the fully closed position.

As a further precaution against a reactor pressure surge causing a safety valve to pop open suddenly, the saturated steam header is equipped with a proportional pressure relief valve, (PCV-10). This valve has a maximum relieving capacity of 76,000 lb/hr of saturated steam when fully open and may be adjusted to open at any desired point between 850 psig and 1050 psig. For initial operation a set point of 975 psig is used.

PCV-10 is a 3-in., 1500 lb, pneumatically actuated relief valve with a 2-in. inner valve, (Black, Sivalls, and Bryson, Inc. — Type 70-14-3 RH with a 280J actuator and 72 P315 positioner). It is a single port globe valve with top and bottom stem guides. Valve bonnet and bottom closure are bolted with fully retained stainless clad, asbestos gaskets. The valve body is A216-WCB steel. The pneumatic actuator is the spring loaded diaphragm type designed to make the valve fail closed on loss of air supply. It is capable of moving the valve stem through full stroke in 2 seconds.

Position switches are provided on the valve stem which will operate valve position indicating lights on the main control panel and will trip

annunciator H-33 and scram the reactor if the valve leaves the full closed position. Although a common annunciator is used for the safety valves and the relief valve, the position indicating lights will show the operator which valve has tripped the annunciator.

The piping used for all of the lines discussed in this section is described briefly in Table 400.1-1 and in Fig. 400.1-3. The thickness of thermal insulation on the various size pipe lines in the respective systems is given in Tables 400.1-2 and 400.1-3. Table 914-1 gives the paint colors for the equipment and piping components of the various systems in the plant cycle.

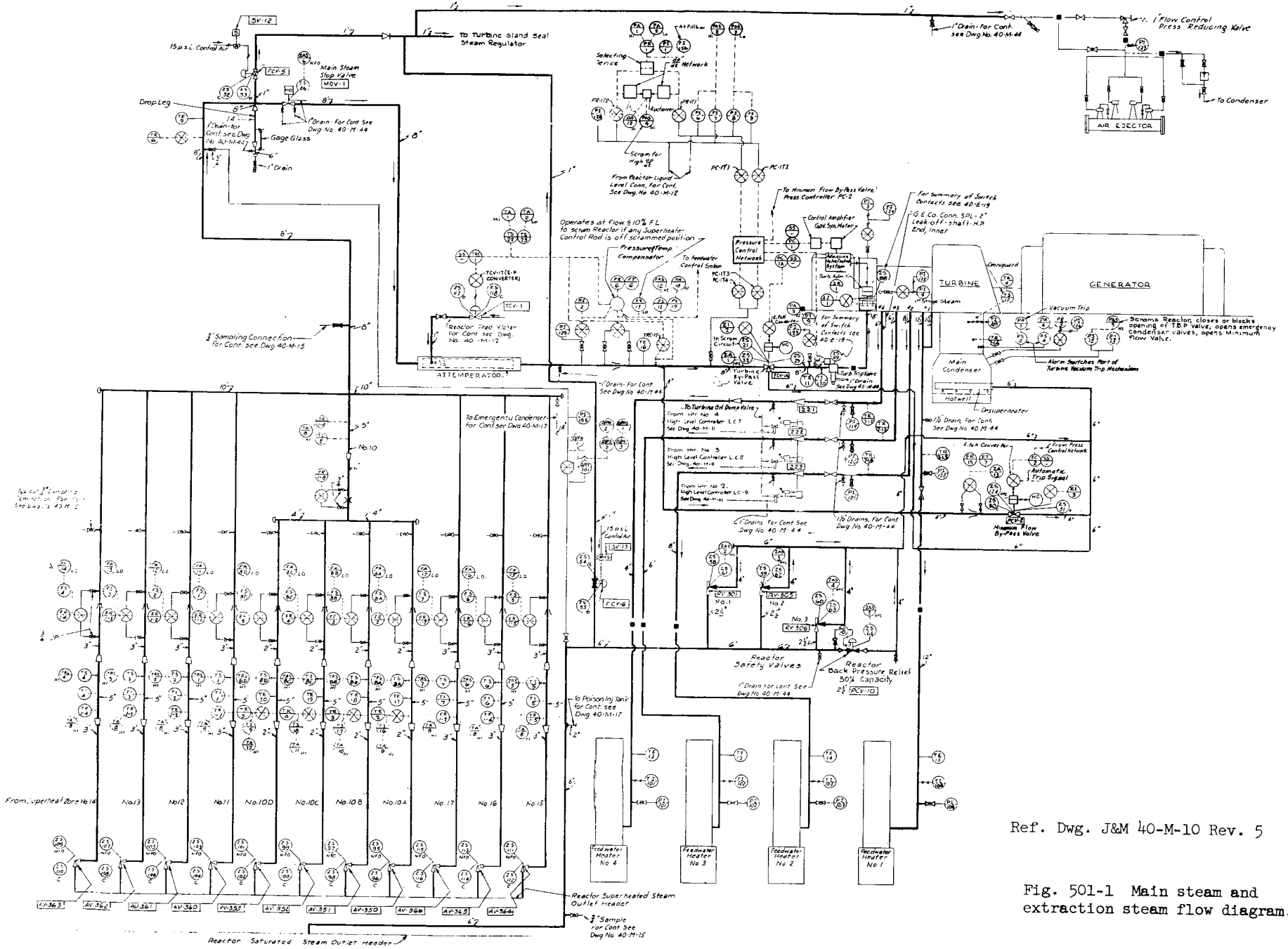

Ref. Dwg. J&M 40-M-10 Rev. 5

Fig. 501-1 Main steam and extraction steam flow diagram.

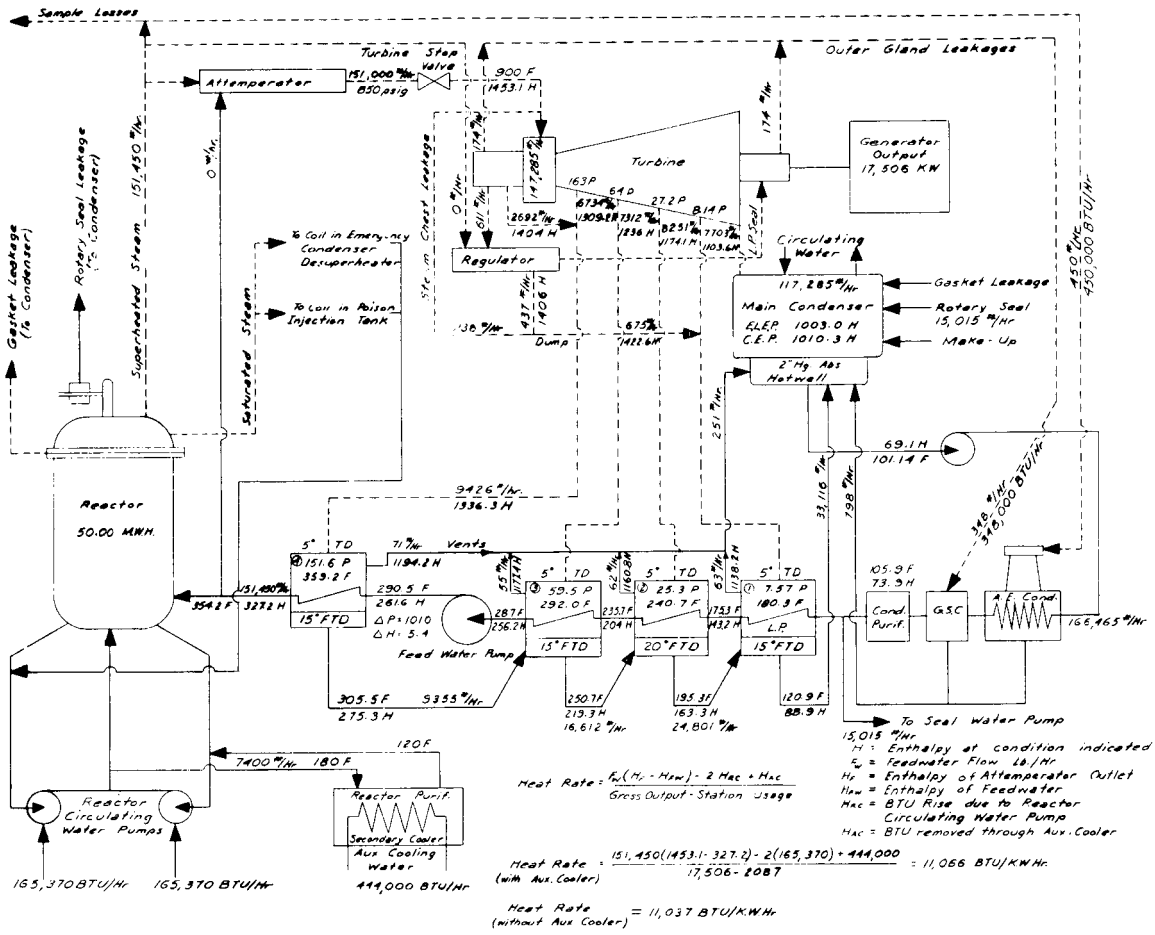

H = Enthalpy at condition indicated
F_w = Feedwater Flow Lb./Hr
H_f = Enthalpy of Attemperator Outlet
H_{fw} = Enthalpy of Feedwater
H_{ac} = BTU Rise due to Reactor Circulating Water Pump
H_{ac} = BTU removed through Aux. Cooler

$$\text{Heat Rate} = \frac{F_w(H_f - H_{fw}) - 2H_{ac} + H_{sc}}{\text{Gross Output} - \text{Station Usage}}$$

$$\text{Heat Rate (with Aux. Cooler)} = \frac{151,450(1453.1 - 327.2) - 2(165,370) + 444,000}{17,506 - 2087} = 11,066 \text{ BTU/KW Hr.}$$

$$\text{Heat Rate (without Aux Cooler)} = 11,037 \text{ BTU/KW Hr.}$$

Fig. 501-2 Heat balance.

Ref. Dwg. J&M 40-M-9 Rev. 1

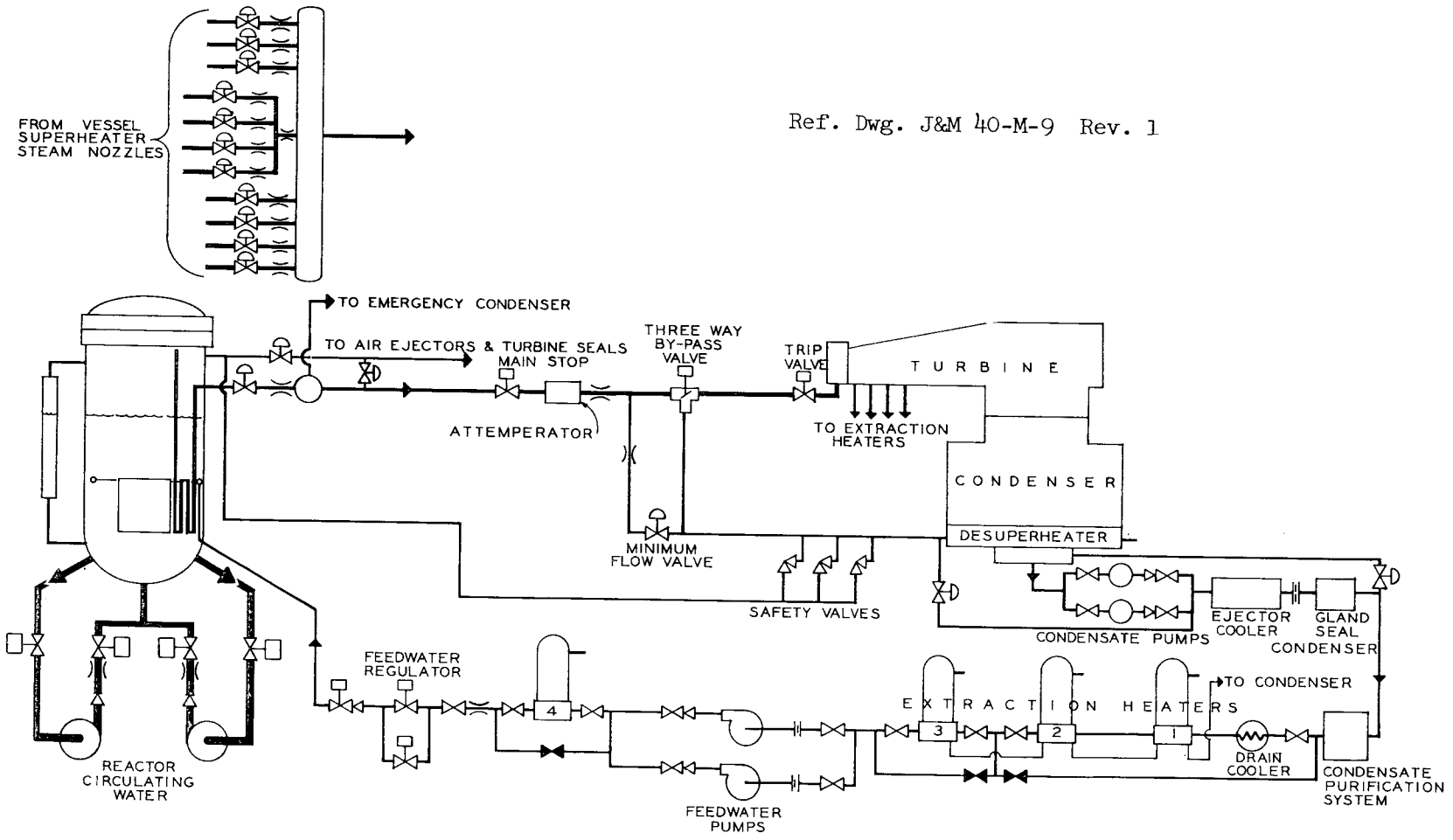

MAIN FLOW DIAGRAM

Fig. 501-3 Simplified steam cycle diagram.

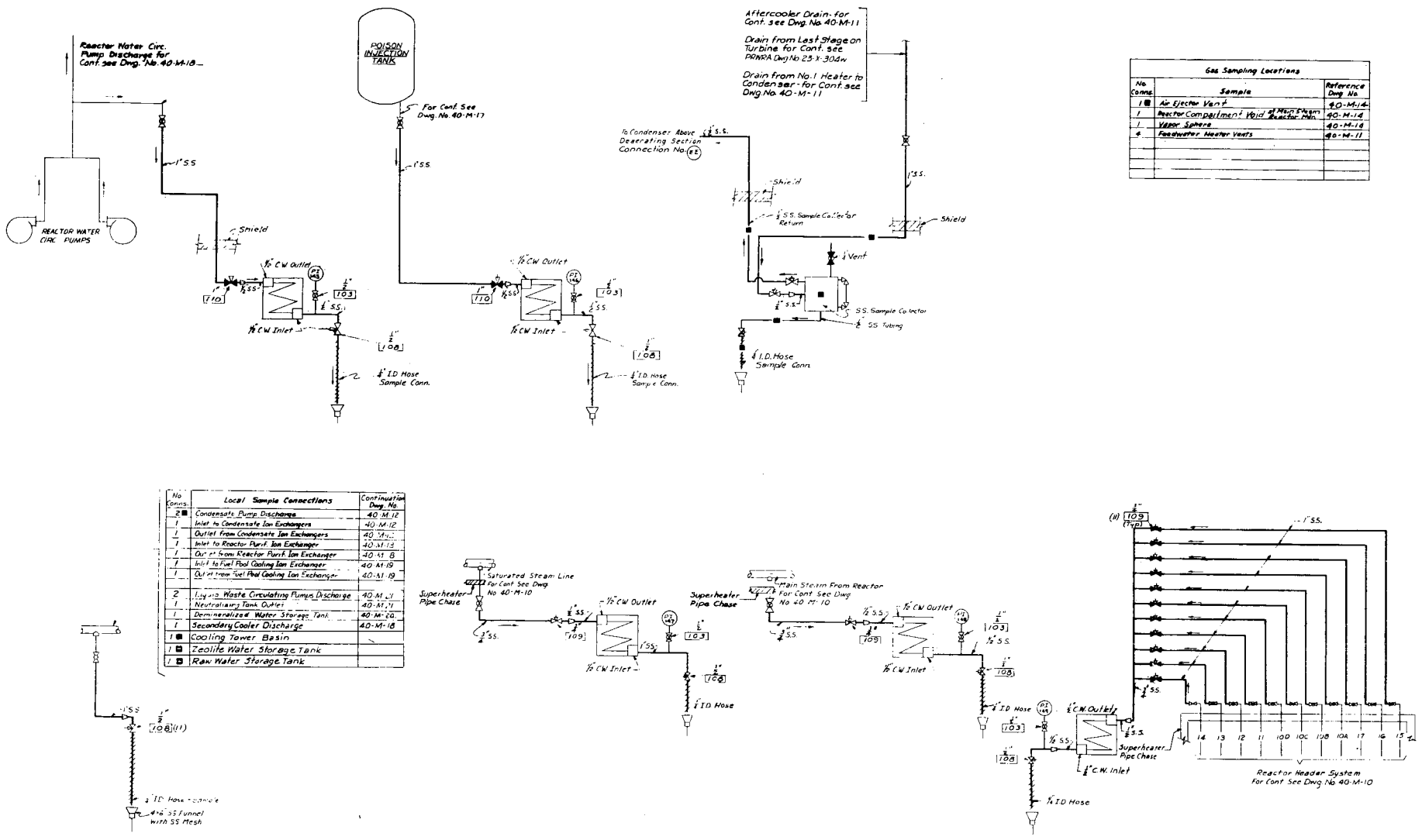

Ref. Dwg. J&M 40-M-15 Rev. 1

Fig. 501-4 Sampling flow diagram.

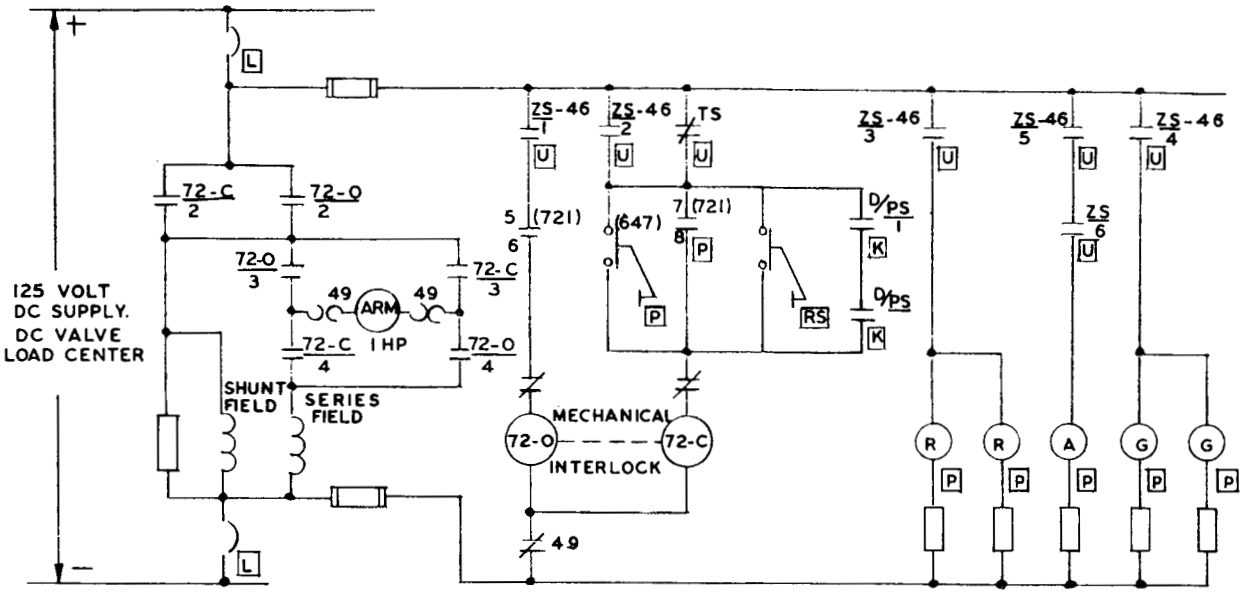

MAIN STEAM STOP VALVE MOV-1

MOTOR OPERATED VALVE
POSITION SWITCH DEVELOPMENT

CONTACTS	VALVE POSITIONS		
	FULLY OPEN	INTER	FULLY CLOSED
1		X	X
2	X	X	
3	X		
4			X
5		X	X
6	X	X	
7		X	X
8		X	X
9	•	X	X
10		X	X

STOP

MOV-1 CONTROL
SWITCH DEVELOPMENT

CONTACTS	POSITIONS		
	OPEN	STOP	CLOSE
1 — 2	X	X	
3 — 4		X	X
5 — 6	X		
7 — 8			X

Ref. Dwg. J&M 40-E-12 Rev. 2

Fig. 501-5 Control schematic MOV-1.

502. TURBINE-GENERATOR UNIT

The turbine-generator unit, manufactured by International General Electric Co., is an ASME-AIEE Preferred Standard Unit, nominally rated at 16,500 kw with a back pressure of 3-1/2 in. Hg abs, 3 per cent make-up and with throttle steam conditions of 850 psig, 900°F. With a back pressure of 2 in. Hg abs, and 0% make-up, the maximum rated output is 17,500 kw.

The turbine-generator unit is of standard construction, except that ductile Ni-Resist rings are substituted for the normal leaded-bronze rings in the steam seals because of the corrosive action of oxygenated steam on leaded bronze. Materials of construction are the following: high-pressure casing, 1% Cr-3/4% Mo; exhaust casing, cast-iron; buckets and diaphragm nozzles, 12% chrome-iron alloy; diaphragms and wheels, 1/2% Cr-1/2% Mo; shaft, 2% Ni-1/2% Mo + 0.1% Va.

The turbine is a single-casing, single-flow, 3600-rpm machine, having four extraction openings for feedwater heating. The area of the turbine exhaust annulus is 16.4 sq ft. The guaranteed non-extraction steam rate is 7.79 lb/kw-hr with a generator output of 16,500 kw at 0.5 psig hydrogen pressure, 0.935 power factor, and a condenser back pressure of 1-1/2 in. Hg abs.

During normal power operation, the steam admission valves of the turbine move in response to a pressure signal from the reactor or turbine inlet to hold reactor pressure constant. With this arrangement, the turbine accepts whatever quantity of steam the reactor is producing; consequently, the turbine output is determined by the reactor power; the turbine does not respond automatically to changes in load demand except on power system transients when the speed governor will tend to maintain the system frequency. During turbine startup, rolling, and synchronization, the admission valves are speed governor controlled. After synchronizing the generator to the 38-kv bus the control of the turbine admission valves is transferred to reactor pressure control. Control of the turbine admission valves is by means of the governor synchronizing motor.

The gland seal system used for the turbine shaft seals and the admission valves is a standard pressure breakdown type. Steam leakoff from the high-pressure packing at the high-pressure end of the turbine is connected to the fourth steam extraction. The seal gland at the low-pressure end of the turbine is also sealed by steam which is bled from the leakoff connection on the high-pressure seal gland during turbine operation and is supplied from the reactor when the turbine is shut down. The outer chamber of all seal glands is maintained, at a negative pressure (minus 6 in. W.G.) with respect to the building atmosphere, by means of the gland seal exhausters. The gland seal exhausters are two small electrically driven blowers which, during normal operation are

used to maintain a negative pressure on the shell side of the gland seal steam condenser by drawing off air and noncondensibles and then forcing the air and noncondensibles into the exhaust duct on the discharge side of the steam jet ejectors (refer to Fig. 410-1). Thus, a mixture of low-pressure steam and air will be drawn from the outer chamber of each seal gland into the gland seal condenser. The gland seal condenser, which is a small shell and tube heat exchanger cooled by condensate from the main condenser, will condense the steam from the air-steam mixture and thus allow the air to pass into the gland seal exhauster. The gland seal condenser is enclosed in a shielded room for personnel protection. The quantities of steam and air expected from each seal chamber are indicated in Table 502-1. Figure 502-1 shows the electrical control circuit for the gland seal condenser exhausters.

Table 502-2 QUANTITIES OF STEAM AND AIR EXPECTED FROM EACH SEAL CHAMBER

	Quantity of Gas Withdrawn From Outer Seal Chamber	
	Air, lb/hr	Steam, lb/hr
Turbine Shaft Seal, High-Pressure End	69	139
Turbine Shaft Seal, Low-Pressure End	59	112
Turbine Admission Valves Seal	15	29

A standard seal steam regulator is provided to admit saturated or superheated reactor steam to the gland seals during startup and during turbine operation to control the pressure of the steam fed to the low-pressure gland seal by controlling the amount of leak-off steam that is bled to the turbine extraction line.

The turbine oil system provides 1) lubrication for the main bearings, 2) seal oil for the hydrogen-cooled generator, 3) oil for the governor system, and 4) oil to actuate the admission valves and the turbine trip valve. The main oil pump is coupled directly to the turbine shaft. A full-capacity auxiliary a-c motor-driven pump is provided to supply the oil that is necessary for continued operation should the shaft-driven pump fail; a small a-c motor-driven pump to supply oil for bearing lubrication and generator seal oil during periods when the turbine is on,turning gear is also provided. An emergency d-c motor-driven pump will supply enough oil for bearing lubrication and generator seal oil should the station service power fail. Figures 502-2, 502-3, and 502-4 show the control circuits for the turbine lubrication system motor-operated auxiliaries. These pumps are mounted on and receive oil from a 1350-gal oil tank which is located below the turbine floor outside the north wall of the feedwater heater room as shown on Fig. 906-5. Twin oil coolers of the shell and tube type are mounted on the side of the oil tank. One cooler is normally used, while the other is on stand-by.

Water from the auxiliary cooling system (Section 509) is used for cooling. Oil, flowing to the turbine generator and exciter bearings and the generator hydrogen seals, is cooled by these heat exchangers. Normal oil flow through the cooler is 77.4 gal/min; the inlet oil temperature is 148°F and the outlet temperature 120°F. Electrically driven vapor extractors are provided on the main oil tank and on a hydrogen removal chamber in the seal oil return line. These vapor extractors discharge into the building air exhaust duct where the flow of ventilation air is sufficient to preclude the accumulation of an explosive mixture (Refer to schematic flow diagram Fig. 410-1).

The generator is a standard 13.8-kv, 3-phase, 60-cycle, hydrogen-cooled unit with a capability of 22,059 kva output at 0.85 power factor at 30 psig hydrogen pressure. It has a direct-coupled shaft-driven main exciter which has a power output of 90 kw at 250 vdc and a direct connected pilot exciter with a power output of 4 kw at 125 vdc.

The generator hydrogen system includes the hydrogen coolers, pressure control equipment, and necessary equipment and controls for purging the generator with CO_2, all of which is of completely standard design as furnished by the turbine manufacturer. The maximum heat load on the hydrogen coolers is 696,000 Btu/hr at 0.5 psig hydrogen pressure and 968,000 Btu/hr at 30 psig hydrogen pressure. This heat is transferred to the auxiliary cooling water which flows through the hydrogen coolers at a rate of 140 gal/min. The turbine is covered by a steel-timber missile shield, described in Section 906A, to retain projectivles in case of turbine explosion that will pierce the containment building.

The schematic electric control circuits for the turbine accessory equipment and generator/exciter are shown in Figs. 502-5 through 502-13.

TURBINE GLAND SEAL EXHAUSTER #1 [21] - 500
TURBINE GLAND SEAL EXHAUSTER #2 [21] - 501

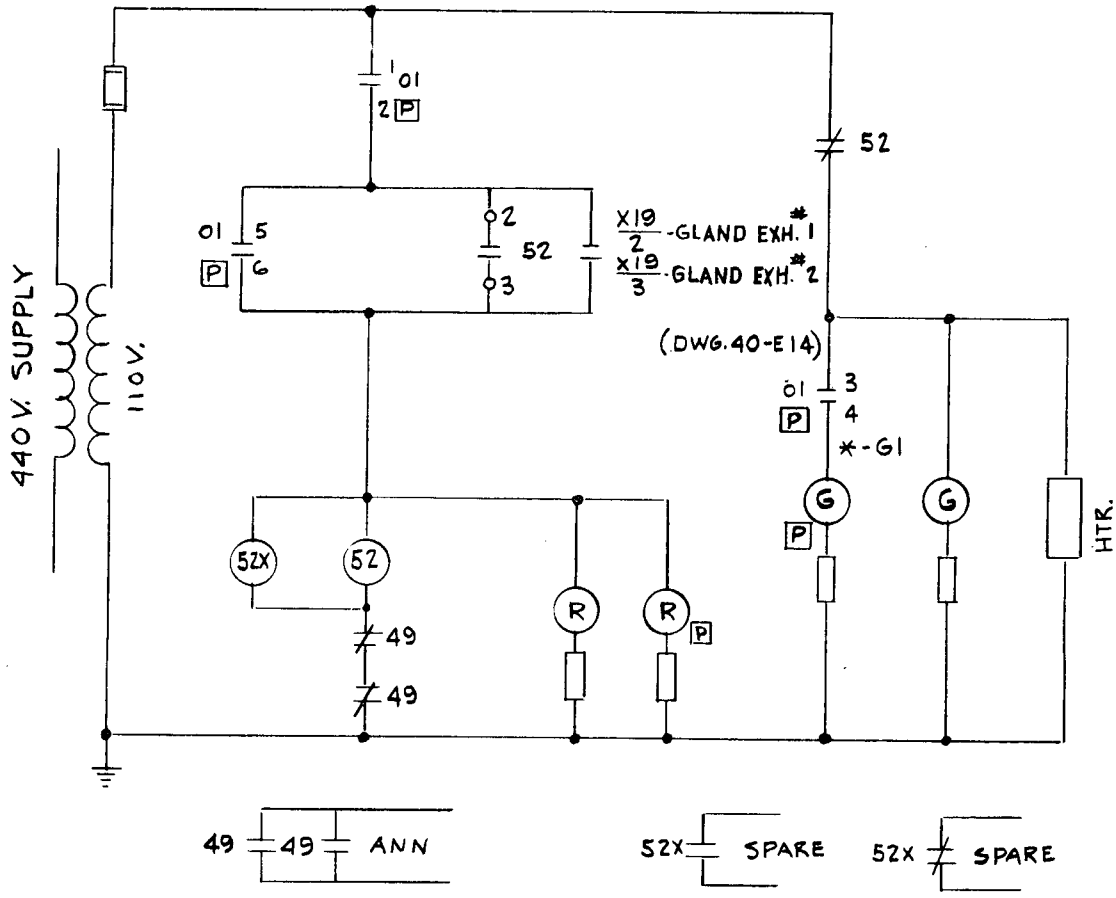

CONTROL SWITCH DEVELOPMENT
TURBINE GLAND SEAL EXHAUSTER #1 & 2

CONTACTS HANDLE END	POSITIONS START	NORM	STOP	L.O. ON STOP
1-2	X	X		
3-4	X	X	X	
5-6	X			
7-8	X	X		

X- DENOTES CONTACT CLOSED. SPRING RETURN TO NORMAL. FOR L.O. TURN TO STOP & PULL-OUT.

REFERENCE DWG. PRWRA 23-X406w REV. 4

Fig. 502-1 Schematic electric control diagram of turbine gland seal exhausters.

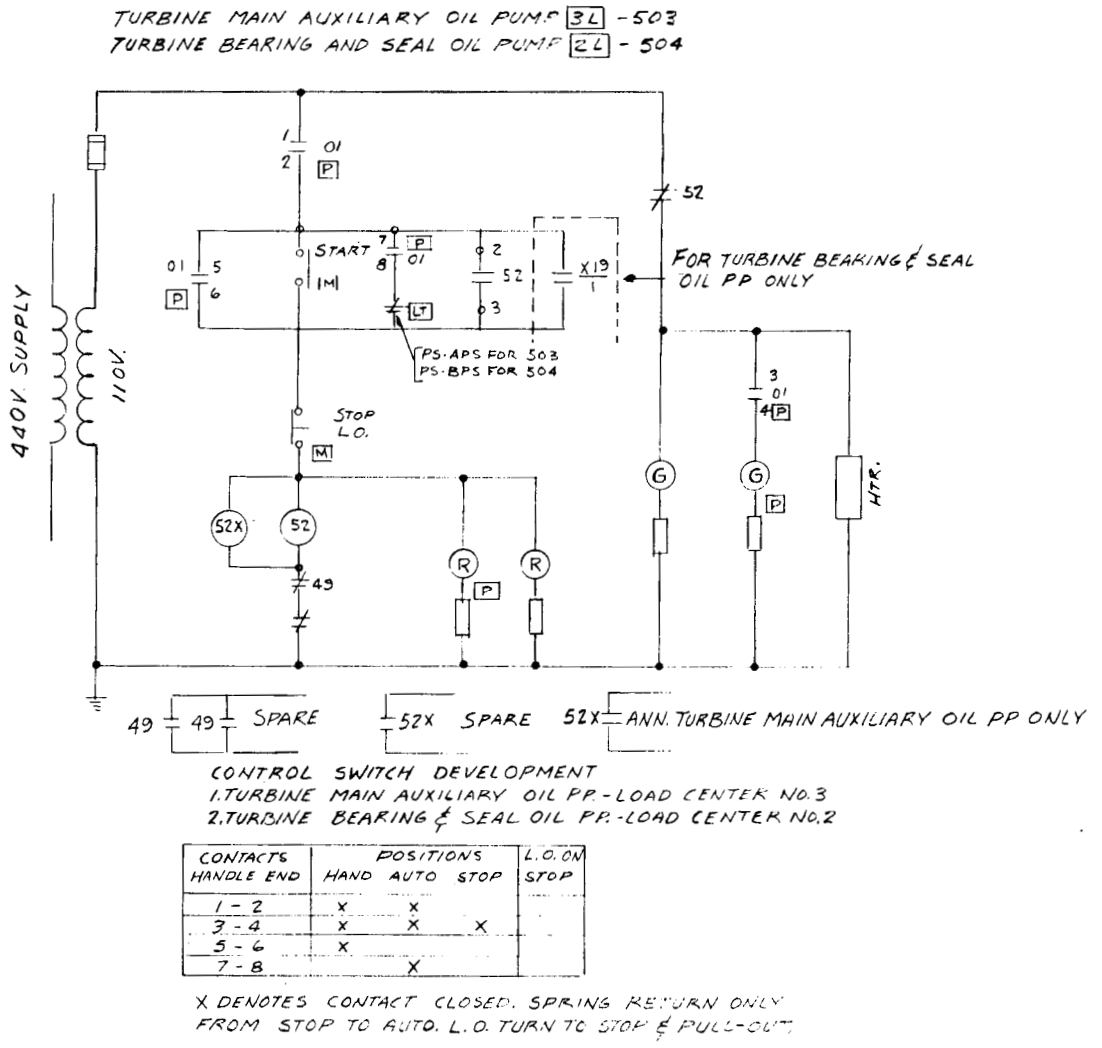

CONTROL SWITCH DEVELOPMENT
1. TURBINE MAIN AUXILIARY OIL PP. - LOAD CENTER NO. 3
2. TURBINE BEARING & SEAL OIL PP. - LOAD CENTER NO. 2

CONTACTS HANDLE END	POSITIONS HAND	AUTO	STOP	L.O. ON STOP
1 - 2	X	X		
3 - 4	X	X	X	
5 - 6	X			
7 - 8		X		

X DENOTES CONTACT CLOSED. SPRING RETURN ONLY FROM STOP TO AUTO. L.O. TURN TO STOP & PULL-OUT

REFERENCE DWG. PRWRA 23-X406W REV. 4

Fig. 502-2 Schematic electric control diagram of turbine auxiliary and seal oil pumps.

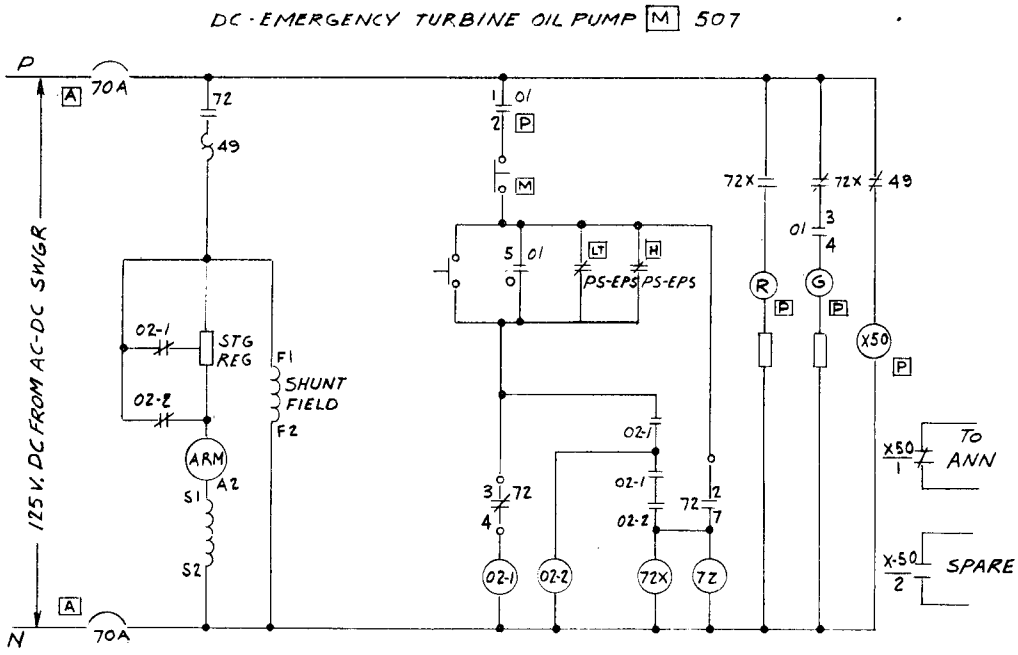

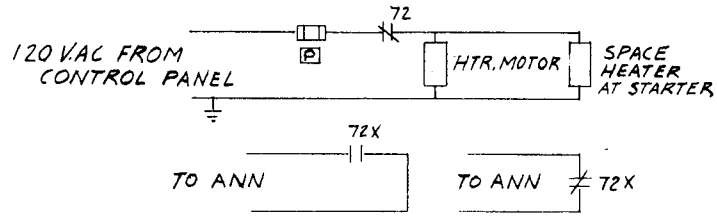

CONTROL SWITCH DEVELOPMENT
DC-EMERGENCY TURBINE OIL PUMP

CONTACTS HANDLE END	POSITIONS HAND	AUTO	STOP	L.O. ON STOP
1 - 2	X	X		
3 - 4	X	X	X	
5 - 6	X			
7 - 8		X		

X-DENOTES CONTACT CLOSED. SPRING RETURN ONLY FROM STOP TO AUTO, L.O. TURN TO STOP & PULL-OUT

REFERENCE DWG. PRWRA 23-X406W REV. 4

Fig. 502-3 Schematic electric control diagram for turbine d-c emergency oil pump.

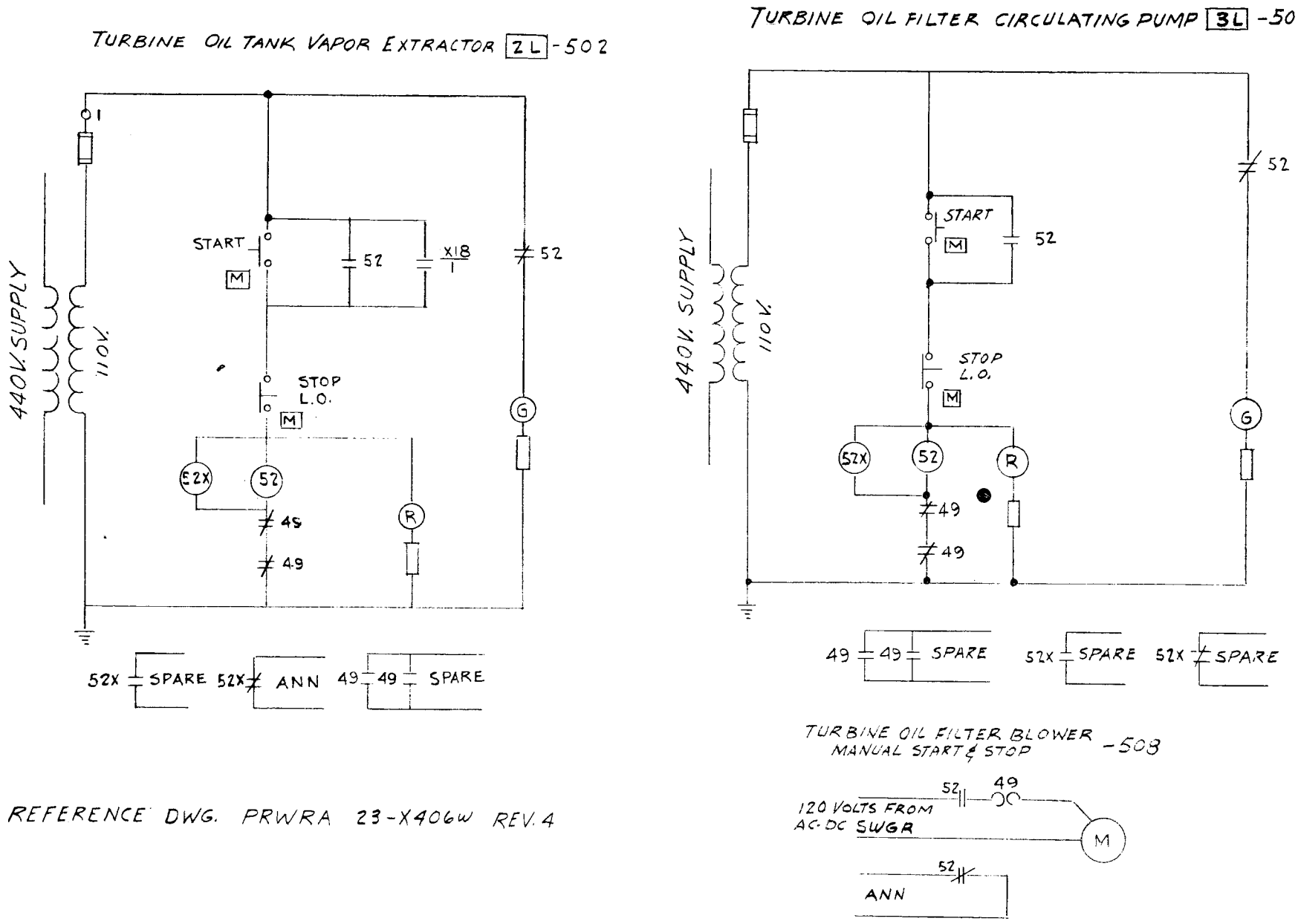

REFERENCE DWG. PRWRA 23-X406W REV. 4

Fig. 502-4 Schematic electric control diagram for turbine oil tank vapor extractor and oil filter circulating pump.

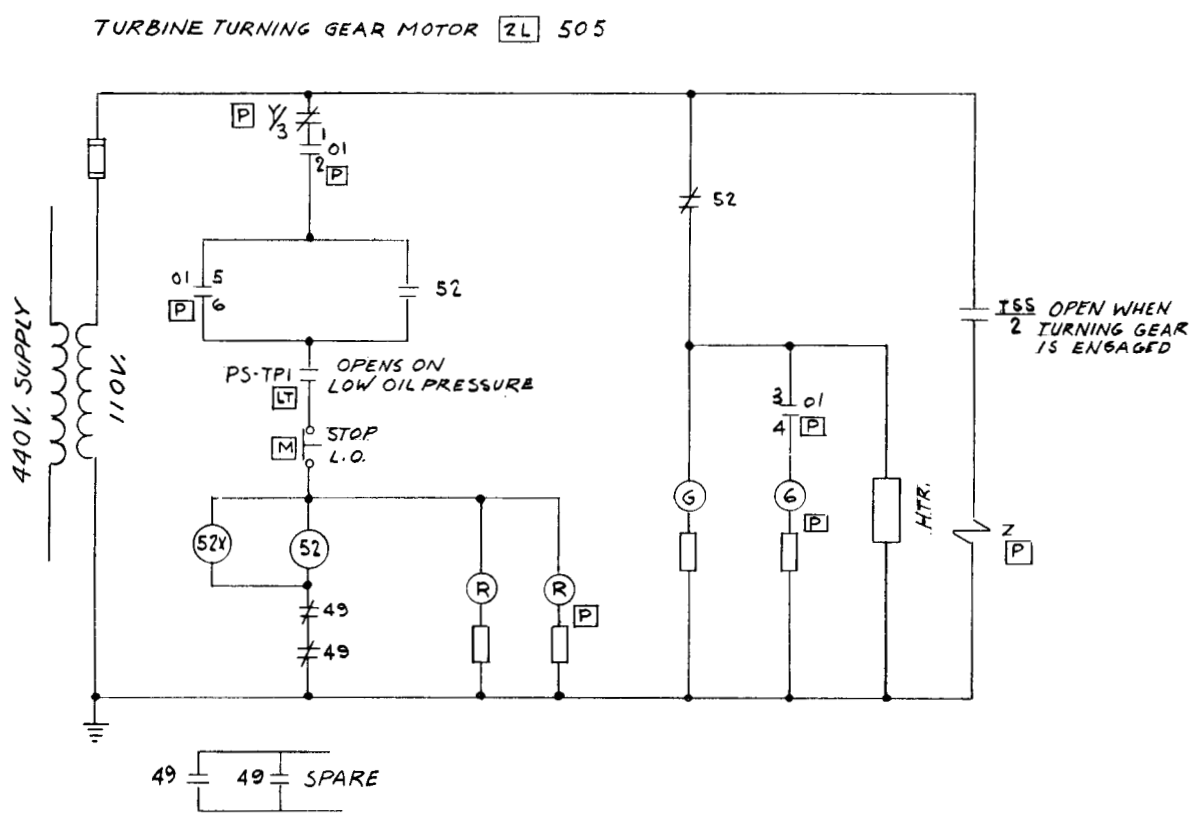

CONTROL SWITCH DEVELOPMENT
TURBINE TURNING GEAR MOTOR

CONTACTS HANDLE END	POSITIONS START	NORM	STOP	L.O. ON STOP
1 - 2	X	X		
3 - 4	X	X	X	
5 - 6	X			
7 - 8	X	X		

X DENOTES CONTACT CLOSED. SPRING RETURN TO NORMAL - FOR L.O. TURN TO STOP & PULL-OUT

REFERENCE DWG. PRWRA 23-X406W REV. 4

Fig. 502-5 Schematic electric control diagram for turbine turning gear motor.

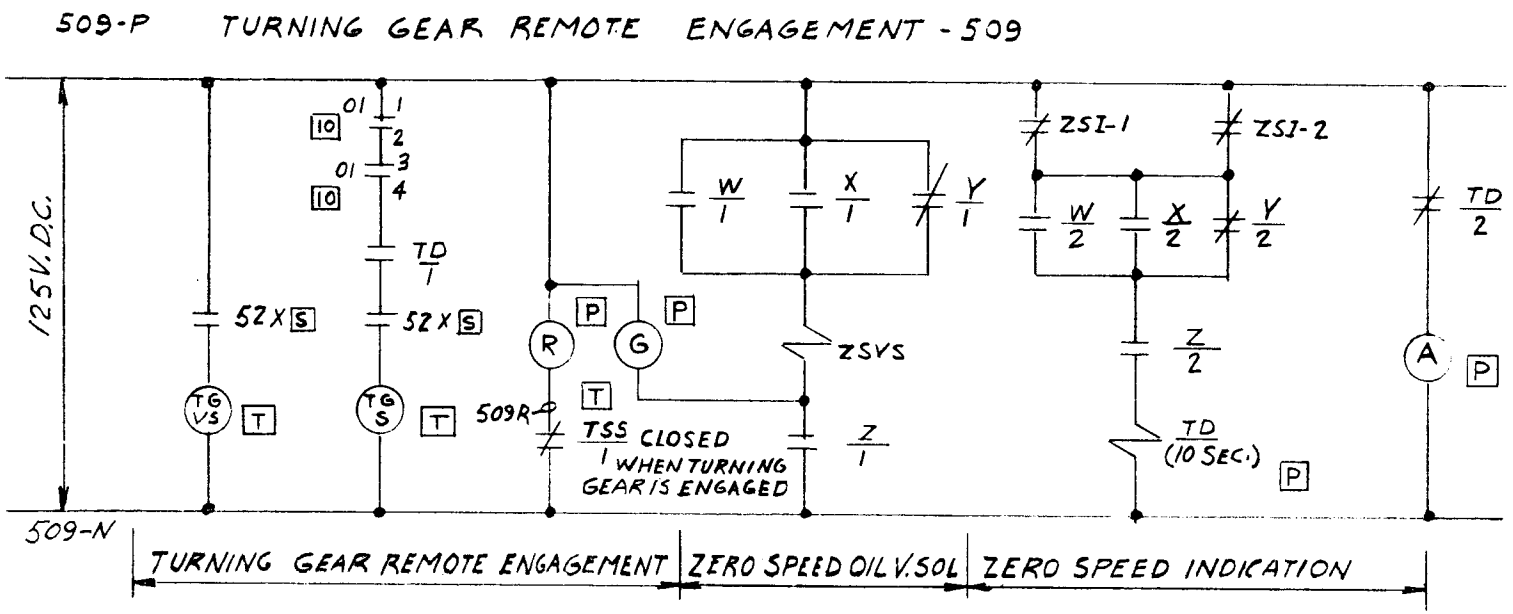

TURNING GEAR REMOTE CONTROL SWITCH DEVELOPMENT

CONTACTS HANDLE END	POSITIONS ENGAGE	OFF
1 - 2	X	
3 - 4	X	

X - DENOTES CONTACT CLOSED - SPRING RETURN TO OFF

REFERENCE DWG. PRWRA 23-X406w REV. 4

Ref. Dwg. PRWRA 23-X406w Rev. 4

Fig. 502-6 Schematic electric control diagram for turbine turning gear remote engagement.

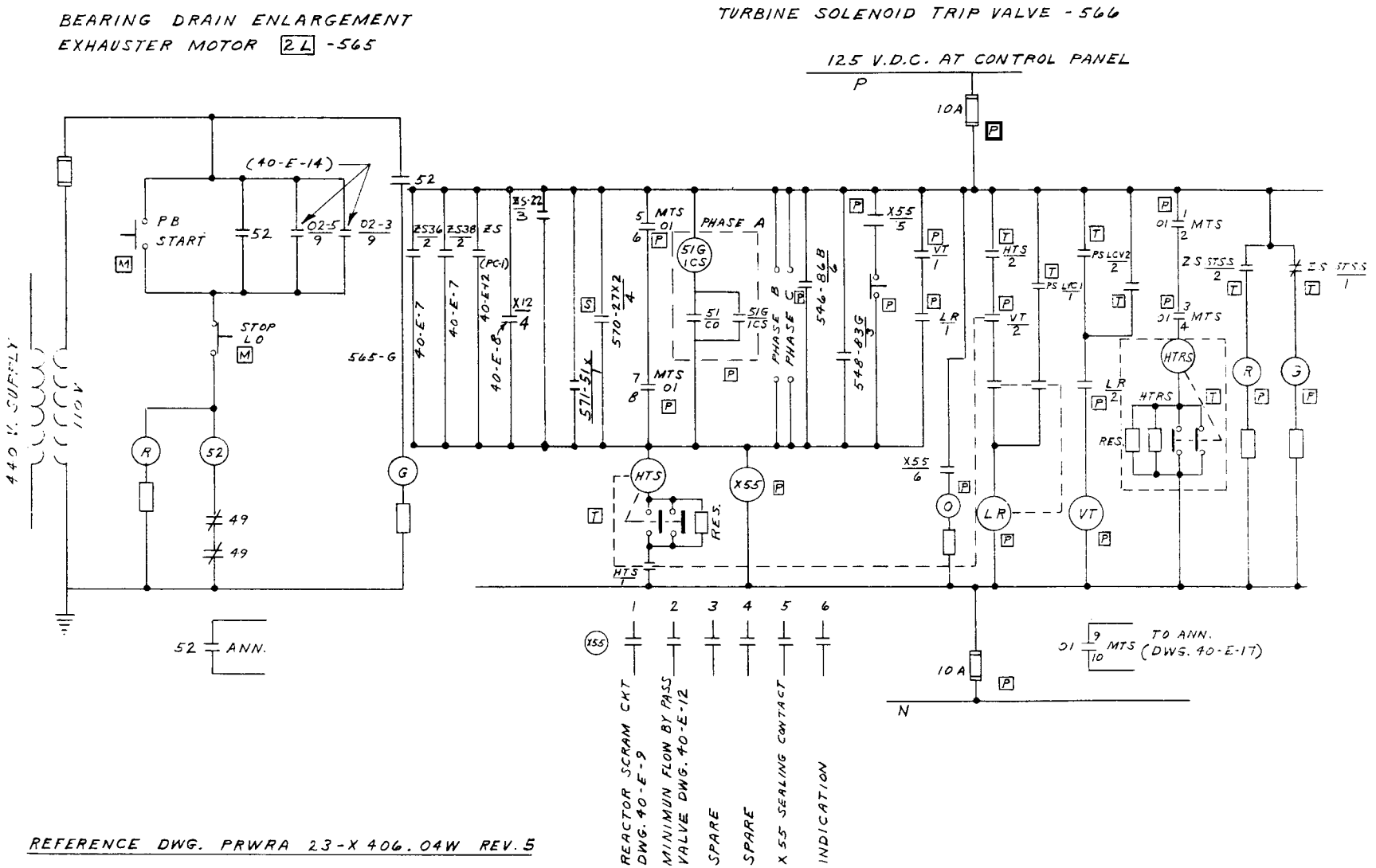

REFERENCE DWG. PRWRA 23-X 406.04W REV. 5

Fig. 502-7 Schematic electric control diagram for turbine trip valve solenoid and bearing drain enlargement exhauster.

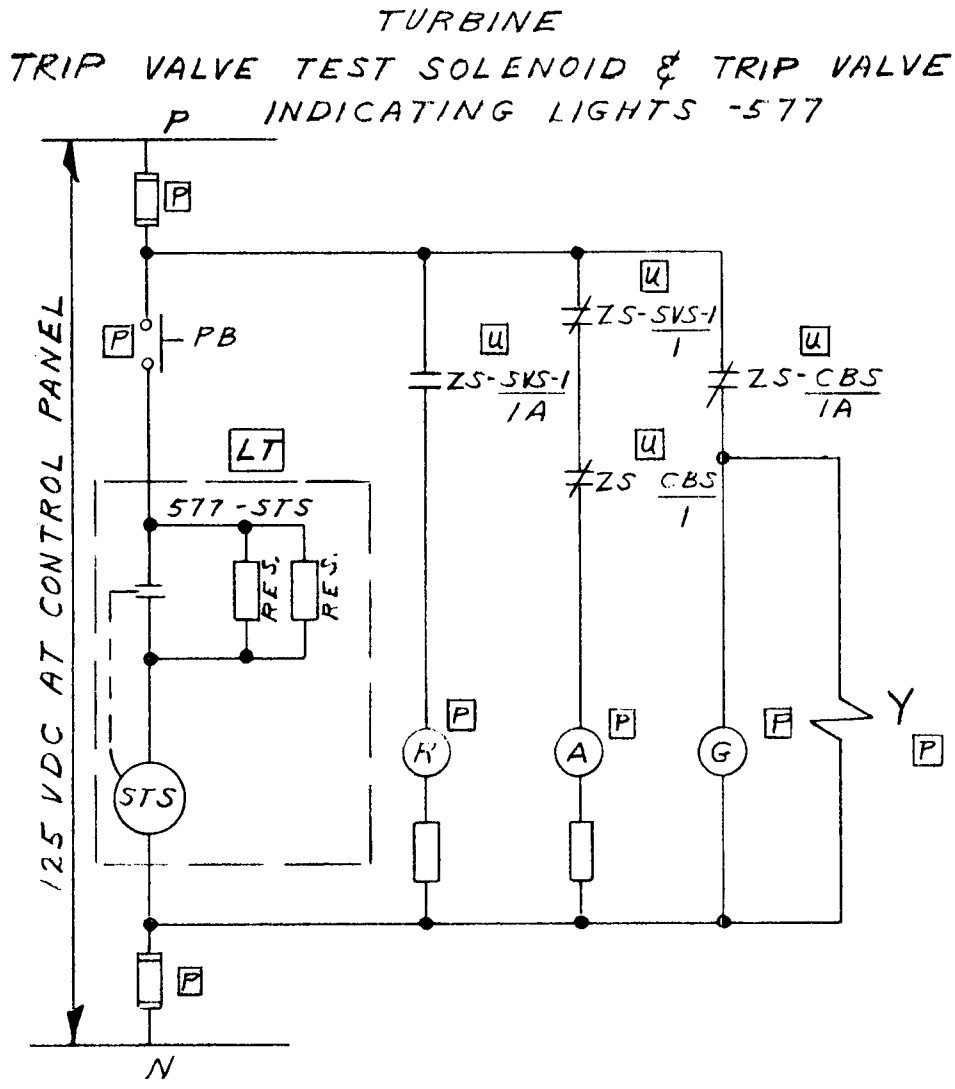

REFENENCE DWG. PKWRA 23-X 406.06 W REV. 4

Fig. 502-8 Schematic electric control diagram turbine trip valve test solenoid.

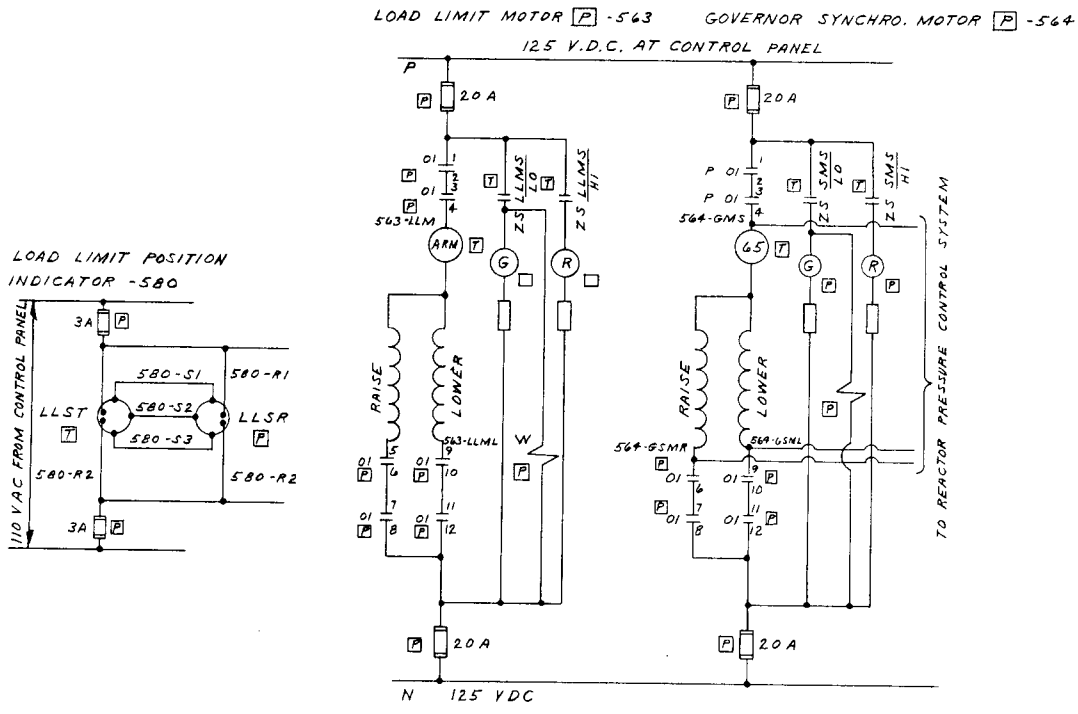

LOAD LIMIT MOTOR
GOVERNOR SYNCHRONIZING MOTOR
CONTROL SWITCH DEVELOPMENT

CONTACTS HANDLE END		POSITIONS RAISE	NORMAL	LOWER
1	2	X		X
3	4	X		X
5	6	X		
7	8	X		
9	10			X
12	13			X

X - DENOTES CONTACT CLOSED
SPRING RETURN TO NORMAL

REFERENCE DWG. PRWRA 23-X 406. 04W REV. 3

Fig. 502-9 Schematic electric control diagram for turbine load limit and governor synchronizing motors.

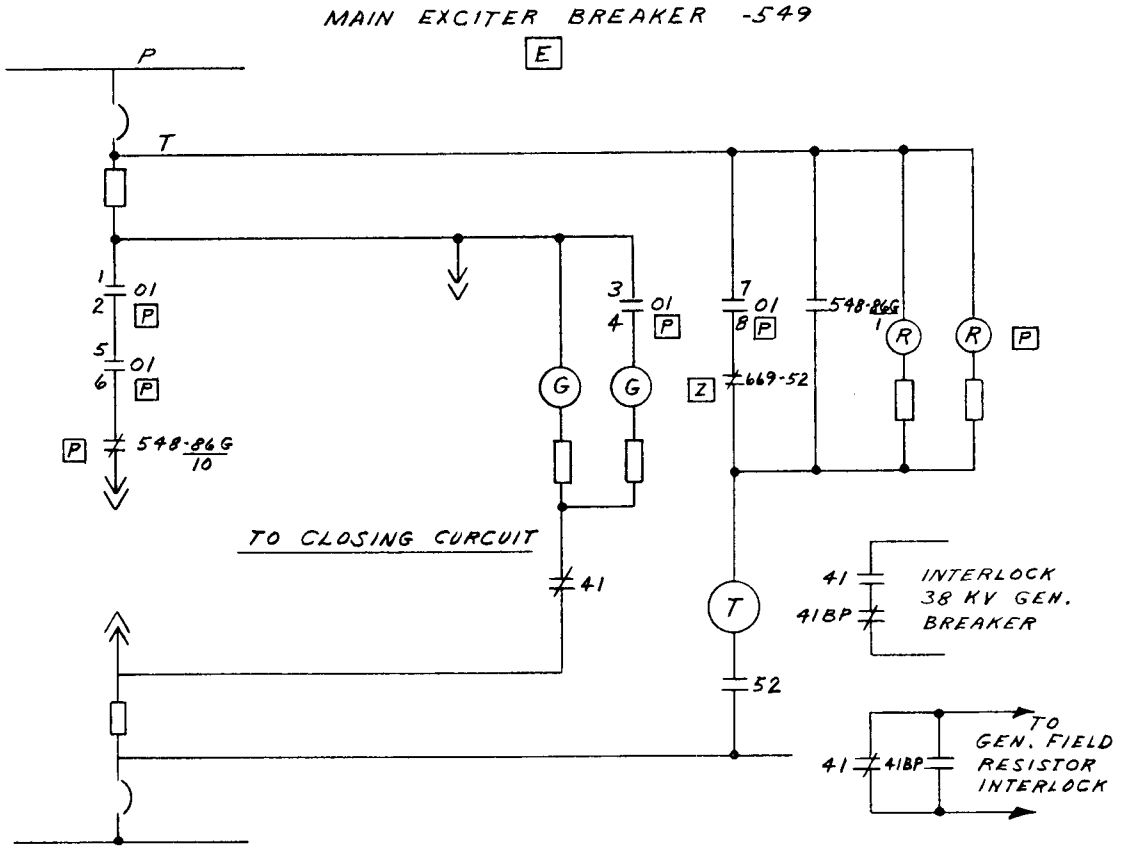

1- MAIN EXCITER BREAKER
CONTROL SWITCH DEVELOPMENT

CONTACTS HANDLE END	POSITIONS				
	CLOSE	NORMAL		TRIP	L.O. ON TRIP
		AFTER CLOSE	AFTER TRIP		
1 - 2	X	X	X	X	
3 - 4	X	X	X	X	
5 - 6	X				
7 - 8				X	X

X - DENOTES CONTACT CLOSED. SPRING RETURN TO NORMAL.

REFERENCE DWG. PRWRA 23-X406.03W REV. 3

Fig. 502-10 Schematic electric control diagram main exciter breaker.

GENERATOR EXCITATION & VOLTAGE REGULATOR CKTS. 544

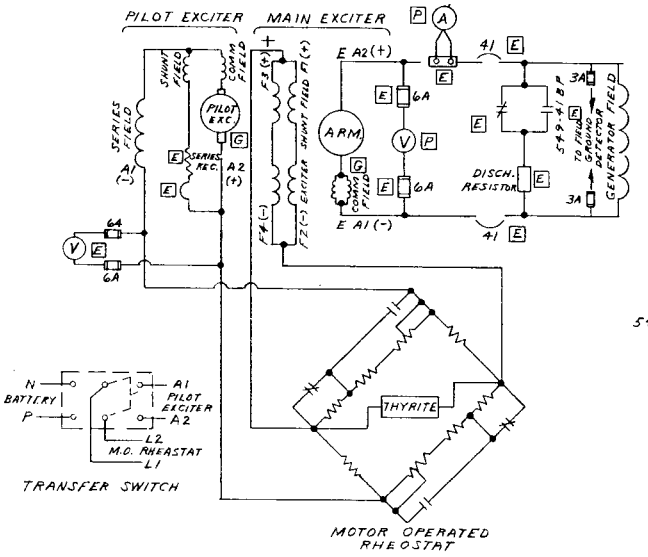

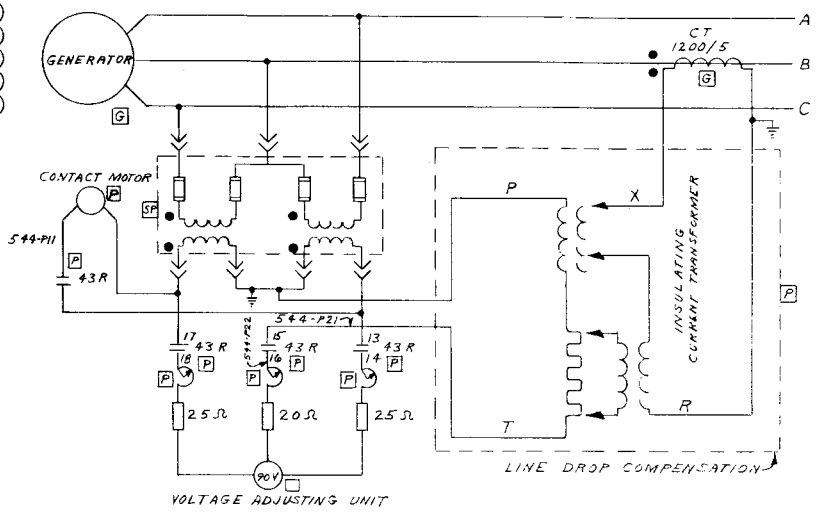

1 - VOLTAGE REGULATOR SELECTOR CONTROL SWITCH DEVELOPMENT

CONTACTS HANDLE END	POSITIONS ON	TEST	MANUAL
1 - 2	X		
3 - 4	X		
5 - C	X	X	
C - 6			X
7 - C		X	
C - 8	X		
9 - C		X	
C - 10	X		
11 - 12	X	X	
13 - 14	X	X	
15 - 16	X	X	
17 - 18	X	X	

X - DENOTES CONTACT CLOSED

REFERENCE DWG. PRWRA 23-X 406.03 W REV. 3

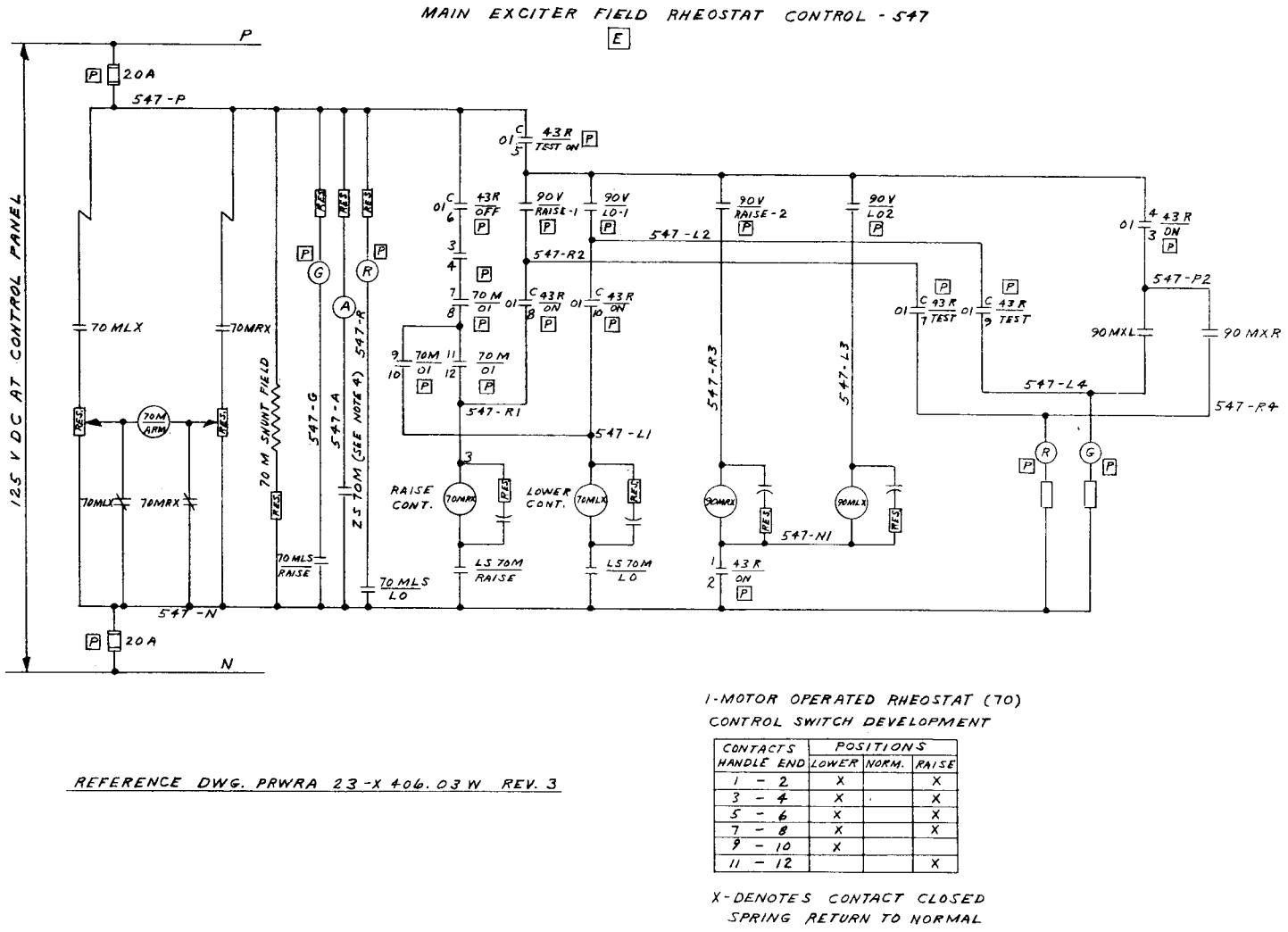

1-MOTOR OPERATED RHEOSTAT (70)
CONTROL SWITCH DEVELOPMENT

CONTACTS HANDLE END	POSITIONS LOWER	NORM.	RAISE
1 - 2	X		X
3 - 4	X		X
5 - 6	X		X
7 - 8	X		X
9 - 10	X		
11 - 12			X

X-DENOTES CONTACT CLOSED
SPRING RETURN TO NORMAL

REFERENCE DWG. PRWRA 23-X 406.03 W REV. 3

Fig. 502-12 Schematic electric control circuit main exciter field rheostat control.

GENERATOR FIELD GROUND DETECTOR - 545

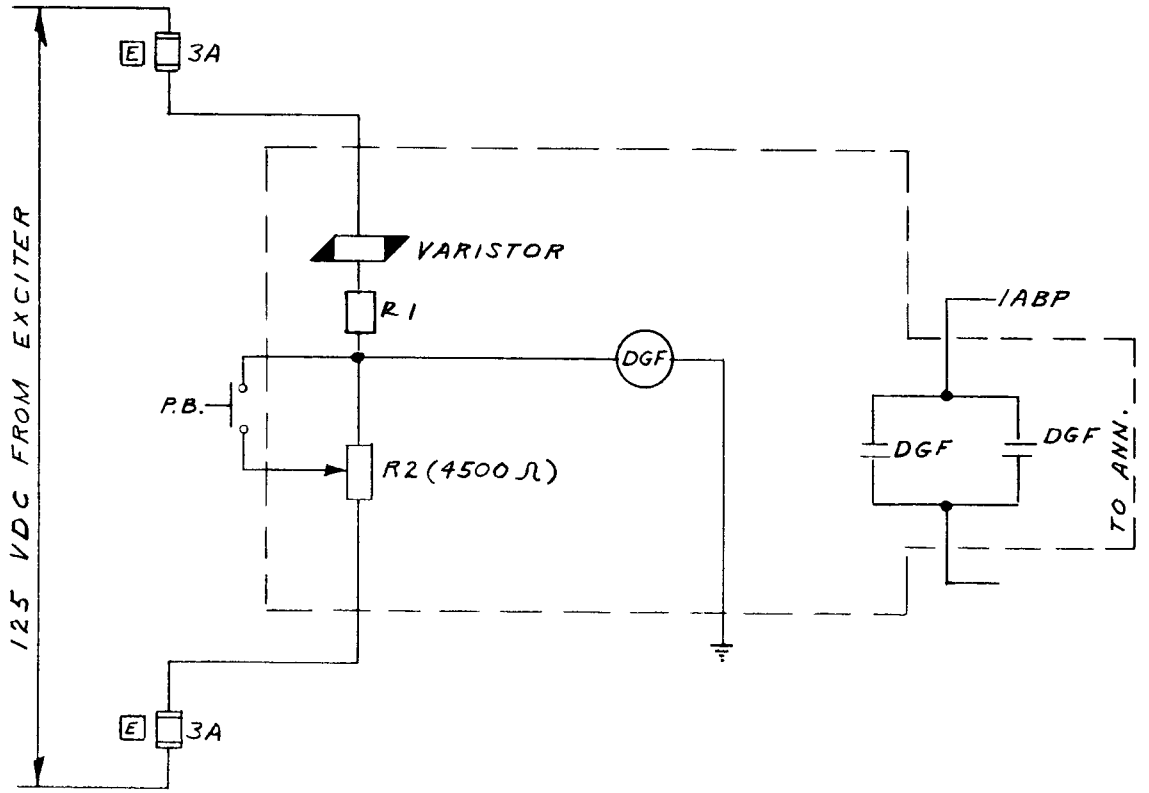

REFERENCE DWG. PRWRA 23-X 406.03W REV. 4

Fig. 502-13 Schematic electric control diagram generator field ground detector.

503. REACTOR PRESSURE CONTROL SYSTEM

A. General

The BONUS Power Station will be operated such that it will deliver to the electric distribution system whatever power is generated from the reactor superheated steam. The primary function of the Reactor Pressure Control System is to maintain reactor vessel pressure constant, within specified limits, by regulating the flow of this superheated steam. Flow regulation is accomplished by controlling the settings of valves in the main steam line to the turbine-generator unit and/or in the main steam bypass lines to the turbine condenser. The flow and control diagram for the Reactor Pressure Control System is shown as Fig. 503-1.

A secondary but equally important function of the Reactor Pressure Control System is to protect the reactor from damage which could result from steam flow rates that are either too high or too low. Because the fuel elements in the superheater region of the reactor core are normally cooled by steam, it is absolutely necessary that continuity of steam flow through the superheater be maintained whenever heat is being generated in the fuel. If sufficient steam cooling is not provided, fuel-element temperatures will rise above a safe level. In addition, the pressure drop through the superheater fuel assemblies due to excessively high steam flow can result in an external pressure on the fuel assembly which could collapse the fuel-assembly pressure tubes if their design pressure is exceeded. Consequently, the maximum steam flow through the superheater is limited to 212,000 lb/hr in order to eliminate the possibility of collapsing the pressure tubes of the superheater fuel assemblies.

As indicated on Fig. 503-1, superheated steam may be delivered either to the turbine or the main condenser and, under certain conditions, may be delivered to both simultaneously. The steam flow path for turbine operation is traced in the following manner. Superheated steam enters the main steam line by means of a subheader and header system which connects it to the 32 individual superheater assemblies. The steam passes through an attemperator where its final temperature is adjusted. Then, if the 3-way turbine bypass valve (TBV) is open to the main line and the turbine trip valve (TTV) is full open, the steam flows through the turbine admission valves (TAV). The setting of the TAV is such that it admits enough steam flow to keep the reactor pressure constant. If, when trying to hold reactor pressure constant, the TAV opens to its flow limit (an adjustable limit) and the reactor pressure continues to rise, the minimum flow bypass valve (MFBV), which is normally closed when there is flow to the turbine, will open to bypass the excess flow and permit reactor pressure to remain constant.

The above described steam flow path exists for the condition of turbine operation, which is one of three modes of operation of the Reactor Pressure Control System. These three modes of constant-pressure operation are summarized as follows:

1) Turbine Operation. Under turbine operation, all of the steam generated by the reactor is delivered to the turbine up to the preset maximum flow for the turbine. If steam flow exceeds the maximum turbine flow rate, reactor pressure will rise and the minimum flow bypass valve (MFBV) will open enough to bypass the excess steam and hold reactor pressure at the reference value set for the minimum flow bypass valve.

2) Turbine Bypass Operation. Under turbine bypass operation, the turbine admission valves (TAV) and the turbine trip valve (TTV) are closed, and all steam generated by the reactor is bypassed either through the MFBV up to its flow capacity (60,000 lb/hr),[1] or through the 3-way turbine bypass valve (TBV) up to its flow capacity of 152,000 lb/hr. The total flow through both valves together can never exceed the 212,000 lb/hr[1] limit.

3) Manual Operation. Manual operation is normally selected during plant startup and shutdown. Under manual operation, either or both of the settings on the TBV and the MFBV may be changed manually from the Main Control Panel.

The Reactor Pressure Control System is actually a completely integrated master system composed of three valve-control systems: the turbine admission valves control system, the turbine bypass valve control system, and the minimum flow bypass control system. In addition to being interconnected functionally to provide control of reactor pressure, these three systems are linked by scram interlocks to protect the reactor and the turbine from abnormal operation conditions.

B. Turbine Admission Valves Control System

1. General

The governing system for the turbine is the standard mechanical-hydraulic speed-governor type which includes a motor-operated synchronizing device to vary speed and load. The function of the speed governor is to control the position of the turbine admission valve (TAV) in order to regulate the flow of steam to the turbine as a function of the turbine speed; the turbine speed in turn is determined by the distribution line frequency. In the case of the BONUS plant, line load changes will have very little effect on the turbine speed, since the BONUS output is small compared to other plants on the line. In addition, the BONUS governor will be less sensitive than that of other turbines and will not tend to respond to load changes as quickly as the other turbines on the line. The motor-operated synchronizing device also regulates the TAV to vary speed when synchronizing the generator to the electrical distribution

1. This is the nominal capacity of the valves. The actual limiting flow may vary $\pm$ 2000 lb/hr.

system and to vary load after synchronizing. It is the load-varying capability of the synchronizing device which is utilized by the Reactor Pressure Control System to match turbine output to reactor output.

Therefore, the TAV control system, one of the three subordinate systems which make up Reactor Pressure Control System, provides two parallel turbine control functions:

—Speed Governor Control. Under speed governor control, and with the turbine synchronized to the distribution line, the steady-state TAV position is determined by the line frequency and the setting of the synchronizing device. Load changes on the distribution line will be reflected as a change in line frequency or a change in the output speed of the turbine-governors which are connected on the line. When load changes occur, the governor control of each turbine on the line will regulate its TAV position to deliver that amount of steam which satisfies the load-frequency characteristic of the particular turbine governor control. Since the BONUS output is small and the BONUS turbine speed governor is less sensitive than the governor of other turbines on the line, the BONUS plant will not respond quickly to transient line load changes. Therefore, most of the transient load change will be absorbed by other turbine-generators on the line, and there will be only a minor change in the operating frequency of the BONUS plant. Once the demand station on the distribution line has corrected for the load change, the normal operating frequency of the line will be re-established.

—Reactor Pressure Control. During startup, the turbine is brought up to synchronous speed (3600 rpm) while under speed governor and load limit control. After synchronizing to the distribution line, the turbine is also placed under reactor pressure control. Reactor pressure control is obtained by controlling the position of the synchronizing device which in turn determines the final position of the TAV.

2. Turbine Admission Valves

The turbine admission valves are mounted directly on the turbine and are furnished as a part of the turbine. The TAV are multiple (six) inlet control valves indirectly positioned by the action of the speed governor and synchronizing device through a mechanical linkage which connects the main operating piston in the turbine control standard to the valve lifter bar in the turbine steam chest. The valves are opened in sequence by movement of the lifter bar against the individual different-length valve stems.

3. Turbine Trip Valve

Although the Turbine Trip Valve (TTV) is not considered to be a part of the TAV control system, a description of its operation is required since this operation is interrelated with the operation of the Reactor Pressure Control System.

Steam is admitted to the turbine steam chest through an oil-operated, quick-closing, stem-sealed stop valve. The sole function of this valve, the TTV (Turbine Trip Valve or Turbine Stop Valve as it is also named), is to shut off steam flow to the turbine on command; consequently, it has only two valve positions: full open and full closed. When the turbine is shutdown the TTV is held closed by springs in the operating cylinder and by steam pressure on top of the valve. Opening the valve is accomplished by an oil dump valve which controls the main oil piston movement; the TTV is held open by oil pressure on this piston. Closing the TTV is accomplished by dumping oil pressure which is accomplished by opening the oil dump valve.

The TTV is automatically closed on the occurrence of any one of the following three conditions: 1) turbine overspeed not corrected by the operating speed governor, 2) reactor scram, and 3) closing of the 3-way turbine bypass valve. Although the governor control system provides adequate protection against turbine overspeed, an entirely separate overspeed governor is provided for double protection. This emergency governor is a spring-loaded bolt-type governor mounted in the turbine shaft; the governor mechanically trips an emergency dump valve in the oil line to remove oil pressure to the TTV when turbine speed exceeds 10 per cent of the normal speed of 3,600 rpm. In addition to the emergency dump valve, a solenoid trip valve is provided to dump the oil upon receipt of certain electrical signals: 1) reactor scram; 2) certain signals associated with the electrical distribution system; and 3) low oil pressure.

4. Characteristics of Turbine Admission Valves Control System

The TAV control system is a reactor pressure and speed-governing system which controls the position of the TAV due to changes in turbine speed and load. The system consists of: a centrifugal speed governor which is driven by the turbine shaft through a worm reduction gear; a hand- and motor-operated synchronizing device which controls the position of the bushing in the primary pilot valve; a servomechanism which is driven by an electrical signal proportional to reactor pressure error or turbine inlet pressure error and which operates the motor of the synchronizing device; a primary relay cylinder which is driven by the primary pilot valve; a main pilot valve which is driven by the primary pilot valve; a main operating cylinder which is driven by the main pilot valve and which positions the turbine admission valves through a mechanical linkage; a load limit pilot valve; a main oil pump with auxiliary pump.

The TAV control system has two control inputs during synchronized operation of the turbine: a pressure error input to the synchronizing device which positions the TAV, for a given operating frequency, so as to eliminate the pressure error; a turbine speed error input to the speed governor which causes turbine steam flow to change so as to eliminate the error. To illustrate system operation under the simultaneous pressure control and speed control, consider the case where the turbine is synchronized to the line and a step increase in line load occurs.

An increase in load on the distribution line will cause all generators on the line to accept a portion of the load change at some new lower frequency or speed. As indicated previously, the BONUS plant will absorb only a minor portion of this load during the load transient by action of the speed governor control. During the transient, there will be a slight decrease in the turbine speed which will cause the turbine admission valves to open and allow more steam to enter the turbine to satisfy the new load at the new frequency. When the demand station on the distribution line readjusts its output to correct the frequency, the reverse of the above occurs and the TAV will be automatically restored to its original position. However, during the transient load change, when the turbine admission valves allow more steam flow, the reactor pressure will start to decrease if the transient is not corrected quickly. This decrease is detected by the pressure control system which controls the synchronizing device so as to position the TAV such that the reactor pressure is maintained within given limits.

The over-all control system is designed to maintain reactor pressure within $\pm$ 5 psi over a steady-state steam flow range between 7,500 lb/hr and 152,000 lb/hr. The pressure set point for the TAV controller may be varied between 800 and 950 psig. This set point is selected and indicated on an indicating-controlling instrument mounted on the Main Control Panel.

If the reactor-pressure-controlled TAV fails to keep reactor pressure from rising, the MFBV control system will automatically bypass the excess steam to maintain reactor pressure. When a turbine trip-out occurs or the TAV closes to a preset position, the MFBV and TBV control systems will automatically control pressure.

A selector switch is provided to switch control from Speed Governor Control to Reactor Pressure Control. An annunciator alarm is provided to indicate if the TBV control selector switch is not in the Turbine Operation position when the TAV control selector switch is in the Speed Governor Control plus Reactor Pressure Control position.

C. Turbine Bypass Valve Control System

1. General

The turbine bypass valve (TBV) control system is designed to control reactor vessel pressure or turbine inlet pressure (at inlet

to TBV) by regulating the flow of steam through the turbine bypass valve. At the full-power reactor steam generation rate of 152,000 lb/hr, reactor vessel pressure will be normally controlled at 950 psig or the turbine-inlet steam pressure will be normally controlled at a lower pressure; at full steam flow this pressure will be a maximum of 850 psig. (The final turbine inlet pressure will be determined during plant operation, and is dependent upon pressure drop through the flow passages in superheater regions of the core and the pressure drop through interconnecting superheated-steam piping). There are three modes of operation for the TBV control system:

1) Turbine Bypass Operation. Turbine-generator not operating, and all steam bypassed to the main condenser via the TBV and/or MFBV.

2) Turbine Operation. Turbine-generator operating, and no steam being bypassed through TBV.

3) Manual Operation. Remote positioning of the TBV from the Main Control Panel; no automatic pressure control.

Reactor vessel pressure or turbine inlet line pressure may be controlled at any pressure setting between 600 and 950 psig, and the controlled pressure can be held to within $\pm$ 5 psi at equilibrium flow conditions.

2. Turbine Bypass Valve

The turbine bypass valve, as indicated in Fig. 503-1, is a 3-way valve located in the main steam line between the reactor vessel and the turbine-generator unit. This valve is designed to pass a maximum of 152,000 lb/hr of 850-psig, 900°F superheated steam to the turbine main condenser. The valve is capable of bypass opening from 0 to 100 per cent lift in less than 2 sec, this 2-sec time increment being measured from the time at which the full-open signal is received by the valve controller to the time at which the valve reaches its full-open position. The valve is designed to fail such that the bypass line is closed. Closure time (100 to 0 per cent lift) on failure of signal or actuating pressure is limited to greater than 15 sec and less than 60 sec. The seat leakage rate of the bypass side of the valve, when closed and operating at the design differential pressure and temperature, is essentially zero. Tight shutoff on the main steam line side of the valve is not required. The 3-way valve is designed so that, when the main steam line side is full open and the 1520,000 lb/hr full flow is passing through it, the valve pressure drop is less than 5 psi.

3. Characteristics of the Turbine Bypass Valve Control System

The TBV control system automatically controls reactor vessel pressure or turbine inlet line pressure to within $\pm$ 5 psi of the pressure setting over a flow range having a ratio of 20:1 or better. The TBV

control system is designed to operate only when the TTV and/or the TAV are closed. The TBV control system is designed to automatically regulate pressure within the limits of its flow capacity with the MFBV either fully open or partially open. When in manual operation, the operator at the Main Control Panel can position the TBV from 0 to 100 per cent lift, the lift speed being variable manually up to a maximum speed which corresponds to a steam flow change of 1000 lb/hr per sec.

When in Turbine Bypass Operation the control pressure set point of the valve is variable between 600 and 950 psig and is selected and indicated on a controlling-indicating instrument mounted on the Main Control Panel. When in Turbine Bypass Operation theTBV is capable of automatically discharging up to 152,000 lb/hr of 850-psig, 900°F steam while maintaining reactor vessel pressure or turbine inlet line pressure within $\pm$ 5 psi of the control pressure set point. As reactor power and steaming rate are increased by withdrawal of control rods, pressure will rise above the control set point and the TBV will automatically open to accommodate the increased flow and restore pressure to its initial value.

Selection of either reactor vessel pressure or turbine inlet line pressure as the control variable is made by a selector switch located behind a locked panel on the Main Control Panel. Selection of any one of the three modes of operation (Turbine Bypass Operation, Turbine Operation, Manual Operation) is made by another selector switch, located on the Main Control Panel. When manual operation is selected, the TBV remains in the position it was in when switchover took place. Continuous indication of TBV position is also indicated on the Main Control Panel.

When in Turbine Operation the TBV is set to control pressure as specified as follows:

1) The turbine inlet line pressure control set point is adjustable in the range of 800 to 950 psig. The control set point is normally at a pressure higher than the turbine inlet pressure for a given turbine steam flow but less than the reactor vessel pressure. Should the turbine trip out or the TAV close, turbine inlet pressure will immediately increase and cause the bypass side of the TBV to open when the pressure reaches the control set point. It should be noted that, when the turbine trips out or the TAV closes, the MFBV will open.

2) The reactor vessel pressure control set point is adjustable in the range of 800 to 950 psig. The control set point, for this location, will be normally set at or slightly above the reactor vessel operating pressure. Should the turbine trip out or the TAV close, reactor pressure will increase above the control set point and the bypass side of the TBV will open to maintain reactor vessel pressure constant.

3) Once the TBV control system has taken over pressure control, the turbine is automatically tripped out to prevent oscillation between the TAV and TBV control systems.

4) Due to the 3-way valve construction of the TBV, steam flow to the turbine is decreased as the bypass side of the valve opens. Consequently, reactor steam flow can never exceed the 212,000 lb/hr limit, even when the TBV is operating with the TTV, TAV, and the MFBV full-open.

5) The TBV control pressure set point is compared electrically with reactor vessel pressure, and the pressure differential is indicated on an instrument mounted on the Main Control Panel. A flashing light alarm on the indicator is actuated at an adjustable value of pressure differential between +10 psi and -100 psi.

D. Minimum-Flow Bypass Valve Control System

1. General

One function of the minimum-flow bypass valve (MFBV) is to prevent complete interruption of steam flow through the superheater coolant passages. For the integral nuclear superheater design, sudden interruption of reactor steam flow due to trip-out of the TTV or to closure of the TAV will cause superheater coolant flow to decrease, and this decrease will cause a rapid increase in superheater fuel clad temperature. To prevent such an occurrence, the MFBV is tripped open whenever a cutoff of reactor steam impends.

Another function of the MFBV is to assist in the control of pressure (reactor vessel or turbine inlet) when this pressure is being controlled by the TAV during Turbine Operation. Should reactor steam production exceed the preset capacity of the TAV control system and thereby cause steam system pressure to rise, the MFBV, within its capacity, will bypass the excess steam to restore pressure to the control set point.

The MFBV control system has two modes of operation: 1) Turbine Operation and 2) Turbine Bypass Operation.

2. Minimum-Flow Bypass Valve

The MFBV, as indicated in Fig. 503-1, is located in parallel with the bypass side of the TBV and is designed to bypass up to 60,000 lb/hr ($\pm$ 2000 lb/hr) of 850-psig, 900°F superheated steam to the turbine main condenser. The valve has an adjustable full-open stop to limit steam flow through the valve (at design steam conditions) over a range from 30,000 to 60,000 lb/hr.

The valve is designed to fail to the open position with an alarm being provided to indicate the failed open position. Also, an indicator located on the Main Control Panel is provided to continuously indicate the position of the valve.

Seat leakage rate of the valve, when closed and operating at the design differential pressure and temperature, is essentially zero. The downstream pressure on the valve is normally 2 in. Hg Abs. with the valve closed and is approximately 300 psig at a total bypass flow of reactor steam of 152,000 lb/hr.

3. Characteristics of the MFBV Control System

When in Turbine Operation, the MFBV control system automatically controls reactor vessel pressure, at a preset value and within the limits of its flow capacity, whenever the TAV control system cannot keep reactor vessel pressure from increasing. When controlling reactor vessel pressure with the TAV at the load limit and excess steam being bypassed, the MFBV controller compensates for steam flow variations so as to hold reactor pressure to within $\pm$ 5 psi of the control pressure set point. The steam flow limit to the turbine may be set between 15,000 and 152,000 lb/hr requiring the MFBV to control reactor steam flow of up to 60,000 lb/hr in excess of the above flow limits.

When in Turbine Operation, the MFBV can be tripped full open from 0 to 100 per cent lift in less than 0.4 sec upon receipt of any of the following trip signals:

1) Reactor Scram

2) Power Failure

3) Turbine Solenoid Trip Valve Energized

4) Turbine Trip Valve Oil Pressure Low

5) Turbine Trip Valve Off Full-Open Position

6) Turbine Admission Valves at an Adjustable Intermediate Position (0-40 per cent of full open)

7) TAV in Intermediate Position and TBV Closed

8) Manual Trip

9) Turbine Inlet Pressure Set Point

This 0.4-sec increment is measured from the time at which the actuating signal is received by the controller to the time at which the valve reaches a full-open position. Once the MFBV has tripped open, a reset

button must be actuated to restore automatic tripping. When the valve is manually positioned (from the Main Control Panel) to the full-closed position, the reset is automatic. Following a trip-open and a preset time delay, the MFBV automatically closes to a preset position. This delay time before closure is initiated is variable in a range of 0 to 30 sec and is preset and locked manually. The preset position to which the valve is to close is variable in a range of 10 per cent of full capacity flow to 0 per cent flow and is preset and locked manually. The time for auto-closure of the valve from 100 per cent lift to 0 per cent lift is greater than 15 sec and less than 30 sec.

When in Turbine Bypass Operation, the MFBV control system automatically regulates reactor vessel pressure or turbine inlet line pressure to within $\pm$ 5 psi of the control pressure set point for a steam flow range having a ratio of 20:1. The control pressure set point is variable between 600 and 950 psig and is selected and indicated on an indicating-controlling instrument mounted on the Main Control Panel. The MFBV control system is designed to operate with the TBV either fully open, partially open, or on manual control.

The MFBV control system and the TBV control system are interlocked so that no unstable operation of pressure regulation occurs. This is accomplished by utilizing different values for the control pressure set point for the two systems.

Manual control of MFBV positions from the Main Control Panel is also provided. The manual control feature allows the operator to position the valve at any time by switching control from automatic to manual and actuating the valve position switch. Valve lift speed is variable with the maximum speed obtainable manually causing a steam flow change of less than 1000 lb/hr per sec at design steam conditions.

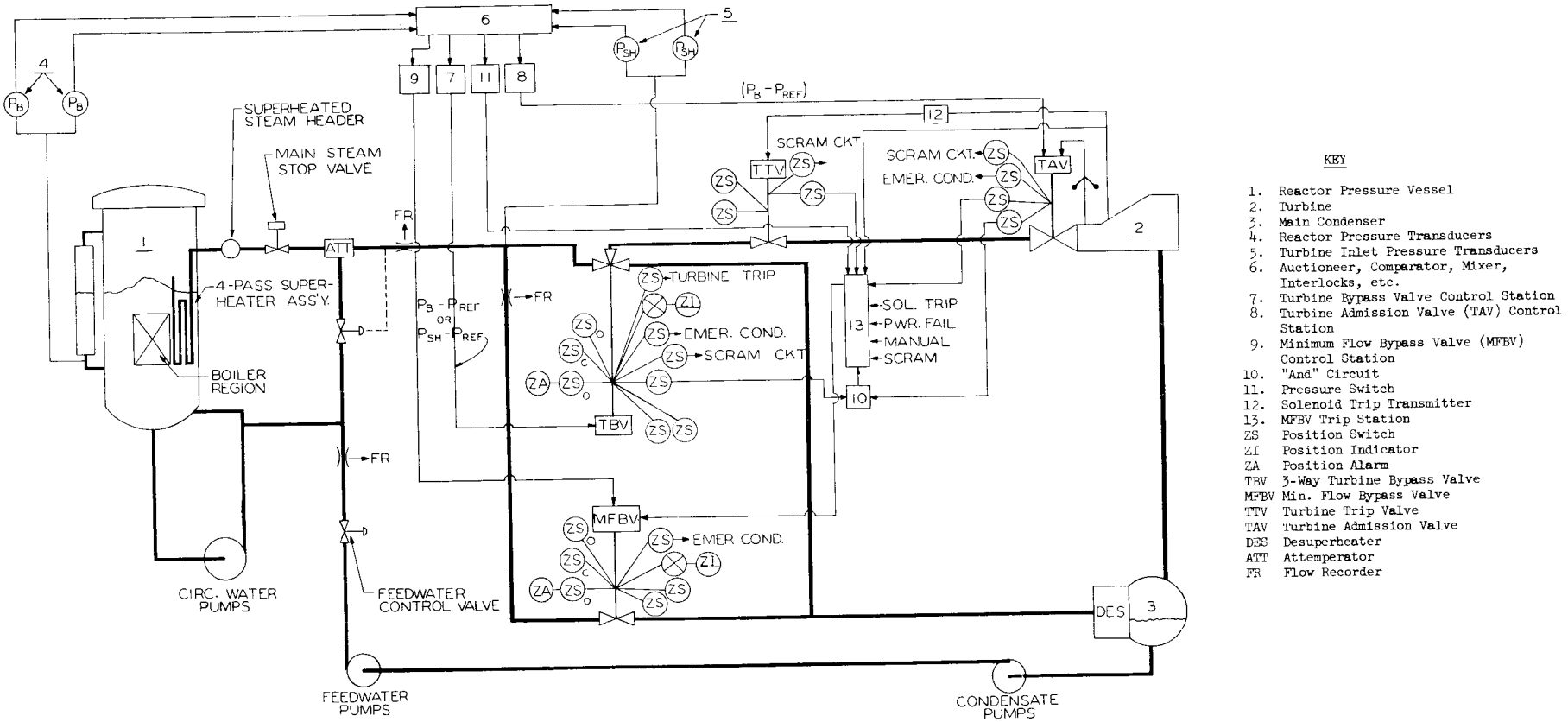

KEY

1. Reactor Pressure Vessel
2. Turbine
3. Main Condenser
4. Reactor Pressure Transducers
5. Turbine Inlet Pressure Transducers
6. Auctioneer, Comparator, Mixer, Interlocks, etc.
7. Turbine Bypass Valve Control Station
8. Turbine Admission Valve (TAV) Control Station
9. Minimum Flow Bypass Valve (MFBV) Control Station
10. "And" Circuit
11. Pressure Switch
12. Solenoid Trip Transmitter
13. MFBV Trip Station

ZS Position Switch
ZI Position Indicator
ZA Position Alarm
TBV 3-Way Turbine Bypass Valve
MFBV Min. Flow Bypass Valve
TTV Turbine Trip Valve
TAV Turbine Admission Valve
DES Desuperheater
ATT Attemperator
FR Flow Recorder

Fig. 503-1 Schematic flow and control diagram for reactor pressure control system.

504. CONDENSER AND AUXILIARIES

A. Condenser

The turbine condenser, designed and built by the Maryland Shipbuilding and Drydock Co., is a two-pass, 20,000-sq ft unit designed to condense 119,000 lb/hr of turbine exhaust steam and to produce a 28 in. Hg vacuum with 17,800-gpm of 85°F inlet sea water circulated through the tubes. The 7/8-in.-OD, 16-BWG, 20-ft effective length aluminum brass tubes (ASTM B-111) are rolled and seal welded to the silicon bronze (Everdur) tube sheets to minimize the entrance of sea water into the condensate system. The 3/4-in.-thick condenser shell is fabricated from copper bearing steel plate (ASTM A-285 Gr C) and the waterbox and waterbox covers are cast iron (ASTM A-48 Cl 30). The 200-cu ft capacity hotwell and the waterboxes are the divided type. The controlled flash-deareating hotwell, with 4.9 minute design-flow storage capacity, is guaranteed to decrease the dissolved oxygen concentration in the condensate to less than .01 cc/liter. The normal operating water level in the condenser is 5 ft, 2 in. below the condenser horizontal centerline.

A nonstandard desuperheating section is located below the tube region and is provided to quench 152,000 lb/hr, 900°F steam from the reactor when the turbine is bypassed. The desuperheater consists of a series of concentric perforated pipes which have internally mounted water spray heads. The water flow rate through the spray heads, supplied by the condensate pumps, is automatically controlled by a temperature-sensitive, air-operated, control valve. The condenser pressure expected when bypassing 152,000 lb/hr directly to the condenser is 3.5 in. Hg abs. The condenser size is approximately 30 per cent larger than that for a conventional plant of this size because of the steam dump design conditions. The normal and turbine bypass steam flow paths to the condenser steam side are shown schematically in Fig. 501-1; the flow path of the cooled condensate leaving the condenser, and the hotwell instrumentation are shown in Fig. 505-1.

The condenser is enclosed in a shielded compartment for the protection of the operating personnel against ionizing radiation; the description of the shielded compartment is given in Section 906-B. The weight of the unit is carried on four concrete piers at the basement floor 16 ft, 0 in. level; the condenser connection to the turbine exhaust flange is through a bolted and gasketed stainless steel rectangular bellows section which absorbs the thermal expansion between the two members. One 24-in.-diameter manhole in the condenser upper shell portion and two 11 in. x 18 in. obround manholes in the hotwell southend are provided for inspection purposes.

The water level and condensate temperature in each hotwell section are indicated and recorded in the control room on panel-mounted instruments described in section 803; local water gauge glasses, and mercury thermometers serve to check the remote reading instruments and to also check the locally mounted float switches for annunciating high and low levels in each hotwell section. Warning and indication of sea water leakage into the lower pressure condensate system is provided by the locally mounted conductivity cells in each 8 in. condensate line leaving the hotwell, in conjunction with the conductivity recorders, with integral high conductivity limit switches, in the control room. Hotwell water level control is the manual type; demineralized water is added to each hotwell section when the level is below normal by the remote opening of the make-up water valve from the control room. The 2-in., 150-lb. flanged, 440-volt, 3-phase, 60-cycle, motor-operated, aluminum-make-up water valve, is shown schematically in the demineralized water piping system in section 510. The electrical control system for this valve is shown diagramatically in Fig. 510-5.

Cooling water for the condenser is sea water from the Mona Passage and is force circulated through the system as shown schematically on Fig. 504-1. The sea water enters and leaves the condenser water boxes through four 24 in. pipe lines that are flange connected to sleeves embedded in the circulating water tunnels formed in the building foundation mat. The inlet and outlet circulating water lines each contain a 24-in. flanged, 50-lb, rubber-seated, 125-V, d-c motor operated butterfly valve and a rubber expansion joint. The electrical control system for these valves is shown schematically in Fig. 504-2. These valves are normally maintained in either the open or closed position and are remotely controlled from the control room; provision is made to close the valves from the "pillbox" station in the entrance building during an emergency condition requiring complete isolation of the containment building.

B. Air Removal Equipment

1. Steam Jet Air Ejectors

The steam jet air ejectors, designed and built by the Maryland Shipbuilding and Drydock Co., are standard twin element, two-stage units with surface type inter and after condensers cooled by series flow of pumped condensate. The location of the ejector in the condensate flow cycle is shown in Fig. 505-1. The air ejectors maintain the vacuum in the condenser when the plant is in service; the motor-driven hogging pump is used normally only to evacuate the system prior to generating steam for the ejectors. Since the ejectors concentrate the N^{16} produced in the reactor steam they are housed within a shielded compartment to protect the operating personnel from the emitted radiation; the description of this shielded compartment is given in section 906B.

Normally only one set of the twin stage elements will be used to maintain condenser pressure at 2 in. Hg Abs; the other unit serves as

a standby or may be used to augment the other. Each twin-stage element has a design flow capacity of 138 lb/hr of air/vapor mixture at 93.5°F and 2 in. Hg Abs. condenser pressure. The units have been sized larger than normal for a conventional station of the same rating because of the radiolytic gas formed by the neutron irradiation of the water within the reactor core zone. The expected weight flow rates of the constituent gases to be removed from the condenser air cooling section by the ejector are 33.6 lb/hr air, 101.0 lb/hr water vapor, 3.0 lb/hr oxygen and 0.4 lb/hr hydrogen.

The interconnecting piping between the condenser and the air-ejector and the gas discharge from the ejector into the radiolytic waste gas disposal system are described in section 410 and shown in Fig. 410-1.

The source of steam for the ejectors when the plant is at power levels is direct from the main superheated steam line; saturated steam is used prior to the reactor being made critical. Control room operated, pneumatic isolating valves designated FC5 and FC6 in Fig. 501-1, are provided for this purpose. The steam consumption rate of each set of steam jets in the twin elements is approximately 450 lb/hr; a flow control pressure reducing valve in the supply line to the steam jets maintains the pressure to the jets at 400 psig. The condensate formed by the cooling of the motive steam in the inter and after condensers drains back to the condenser through ball float traps. The point of entry of the drains to the condenser is shown schematically in Fig. 506-1.

The design of the horizontal intercondenser and aftercondenser are similar. The stainless steel tubes are rolled at each end into stainless steel tube sheets; the 14-in.-OD intercondenser and 10-in.-OD aftercondenser shells are made from carbon steel plate, and the channels at each end of the shell are carbon steel flanged type. The tube side of the intercondenser has 120 sq ft of heat exchange surface and the condensate makes three flow passes through the unit before entering the aftercondenser. The corresponding number of passes made by the vapor as it flows through the unit prior to second stage cooling in the aftercondenser is three. The tube side heat exchange surface in the aftercondenser is 60 sq ft and the tube and shell side flow passes are two and one respectively. The materials of construction of the other component parts are the following:

1) Steam chests - 1-1/4 per cent chrome, 1/2 per cent Mo.
2) Air chamber - cast steel.
3) Diffusers - carbon steel.
4) Steam nozzles - stainless steel.

The corresponding design hydrostatic test pressures are:

1) Shell and steam jet parts - 100 psig.
2) Tubes and channels - 300 psig.
3) Steam chests - 1800 psig.

The condensate flow through the air ejector coolers is automatically controlled to maintain a minimum flow of 80 gpm to ensure complete condensation of the motive steam, irrespective of the plant load. This flow regulating function is accomplished by an air operated flow control valve (FC-3) in the recirculation line to the condenser (see Fig. 505-1) which automatically responds to the pneumatic controller measuring the flow downstream of the air ejector. For plant loads greater than that corresponding to a condensate flow rate of 80 gpm, the recirculation valve is fully closed.

2. Condenser Hogging Pump

The condenser hogging pump is used for initial rapid removal of air from the condenser and to maintain condenser vacuum prior to producing sufficient steam for the operation of the air ejector. It is also used during a reactor shutdown to continue holding condenser vacuum during the steam blow-down, reactor pressure reduction operation sequence. The pump (Nash Hytor Model L-5) is a horizontal, single-stage, centrifugal, water-sealed, constant-displacement type. The pump is driven by a 20-hp, 440-V, 3-phase, 60-cycle, 900-rpm, totally enclosed, fan-cooled motor. The starting and stopping of the pump is from the control room; Fig. 504-3 shows the electrical control circuitry for the unit.

The materials of construction for the pump parts are steel. The unit has a rated air flow (50% relative humidity) capacity of 295 cfm at a vacuum of 19 in. Hg (referred to 30 in. Hg barometer) with 60°F seal water. Condensate at a flow rate of 12 gpm, is used as the seal water and is supplied by the condensate pumps and discharged back to the condenser.

The location of the hogging pump in the condenser air removal cycle is shown schematically in Fig. 410-1; the physical location of the unit in the same shield compartment with the turbine gland seal condenser equipment is shown in Fig. 906-5.

C. Condensate Pumps

The condensate pumps take condensate from each section of the condenser divided hotwell and force it in series through the air ejector, the turbine gland seal condenser, the condensate purification system and the three low pressure feedwater heaters to the suction side of the reactor feedwater pumps. This flow cycle path is illustrated in Fig. 505-1. Each pump is designed to deliver 235 gpm against a 490-ft total dynamic head.

The motor-driven condensate pumps (Ingersoll Rand Co. Model 10APHSC) are vertical, 10-stage, single-suction, turbine type equipped with mechanical shaft seals. The materials of construction are the standard types used in conventional power plants; 1) casing - cast iron; 2) impellers and shaft bushings - bronze; 3) shaft and shaft sleeves - stainless steel; and 4) impeller and casing wear rings - bronze.

Each pump is driven by a 1750-rpm, 50-hp, 440-volt, 3-phase, 60-cycle, totally enclosed motor. The shaft seal is John Crane Type 1, double seal, 2-in. size, Code BP-2C1, all mounted on an 18-8 stainless-steel shaft sleeve with a flush and quench gland and an 18-8 stainless steel end plate. The 2 gallon/min of condensate used in the flush and quench gland is supplied at 5 psi over the box pressure and returned to the condenser. The water leakage from the seals is drained to the plant retention tanks.

The condensate pumps are mounted in 18-in. Schedule 40 steel pipe pits, embedded in the concrete foundation mat to give the required net positive suction head at the first stage impeller; Figs. 903-1 and 903-2 show the condensate pump pit locations in the mat.

The condensate pumps are remote started from the control room and electrically interlocked with the reactor feedwater pump control circuits to ensure sufficient suction head at the feedwater pump suction header. If either pump is stopped, the feedwater pumps will also trip out and scram the reactor. Trip out of either pump is automatically annunciated in the control room. The control circuit for the condensate pumps is shown schematically in Fig. 504-4.

D. Condenser Sea Water Circulating Pumps

The two condenser circulating water pumps, mounted on the sea water intake structure, pump sea water from the Mona Passage through the condenser tubes and back to the sea water discharge structure as shown schematically in Fig. 504-1.

The pumps (Ingersoll Rand Co. Model 16 APM) are vertical, mixed-flow, single-stage units with submerged 27-1/2-dia. suction and 24 in. above-ground flanged discharge. The pump design rating is 9000 gpm against a 38-ft total dynamic head. Each pump is driven by a 125-hp, 1170-rpm, 440-volt, 3-phase, 60-cycle, weather protected motor. The schematic control circuit for the pump motors is shown on Fig. 504-5.

The materials of construction are as shown in Table 504-1.

Table 504-1 CONDENSER CIRCULATING WATER PUMP MATERIAL LIST

Casing	Ni. Resist
Impeller	Stainless steel
Shaft	Stainless steel
Discharge elbow	Ni. Resist
Shaft Sleeves	Stainless steel
Impeller Wearing Rings	Bronze
Casing Weaving Rings	Bronze
Shaft Column Pipe	Stainless steel

The pump bearings are cutless-rubber type and are water lubricated during startup and during emergencies with 40-psig raw water from the site water storage tanks. After the pumps are running and the motor-operated 24-in. pump discharge valves open, sea water from the pump discharge header is used for lubrication of the pump bearings. The lubricating water passes through a manually operated duplex strainer set to remove gross particulates and the pressure is increased by the salt water pump to the pressure level required at the bearings. Prior to entry to the pump bearings the discharge from the salt water pump flows through a motor-operated filter to remove fine particles that can be damaging to the bearings.

Sea water for the circulating system is drawn from the intake canal which is equipped with stop log grooves, trash racks, sluice gates, and traveling-water screens. The water velocity through clean traveling screens with intake water at mean sea level is approximately 2 ft/sec. A screen wash pump is provided for trash removal. The water-circulation pumps discharge into a 42-in.-dia. reinforced concrete pipe line which passes beneath the containment building floor slab to the condenser intakes. The condenser discharge line is similarly arranged.

The schematic electrical control diagram for the circulating water pump motor operated valves is shown in Fig. 504-6. Figs. 504-7 and 504-8 show respectively the control circuits for the sea water circulating system accessory equipment, the two 1/2-hp traveling water screens and the 25-hp screen wash pump. The corresponding schematic control diagrams for the 3-hp salt water pump and the 3/4-hp motor operated filter are presented in Figs. 504-9 and 504-10, respectively. Except for the circulating water pumps and the discharge valves, which are operated from the control room, all of the electrically operated devices located at the sea water intake structure are started and stopped at the unit. The 440-volt, 3-phase, 60-cycle supply to these auxiliarlies is from motor control center No. 4 located in this same area.

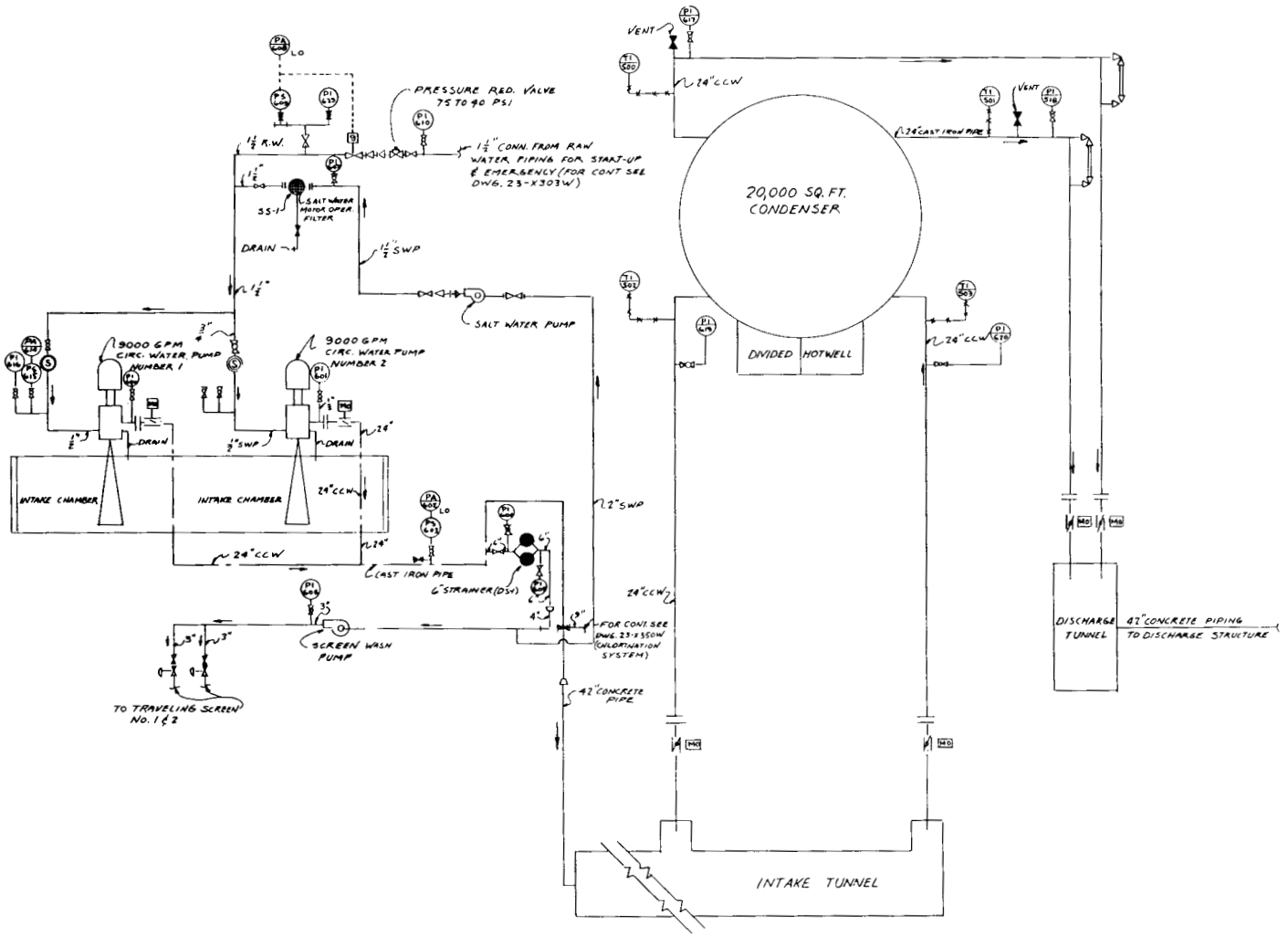

REFERENCE DWG. PRWRA 23-X406W REV. 4

Fig. 504-1 Schematic flow diagram condenser sea water circulation system.

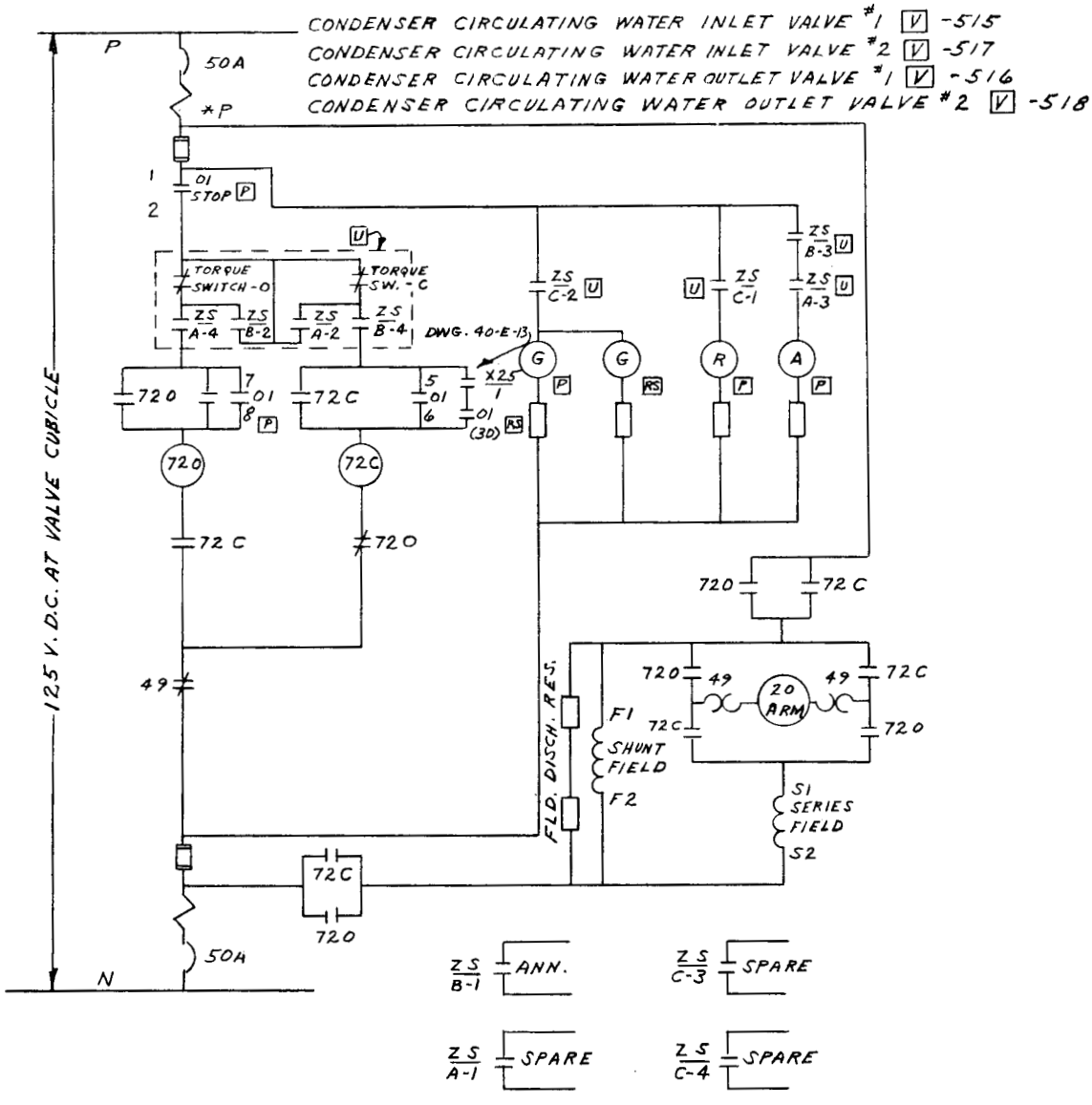

CONDENSER CIRC. WATER INLET VALVE NO. 1 & NO. 2
CONDENSER CIRC. WATER OUTLET VALVE NO. 1 & NO. 2
CONTROL SWITCH DEVELOPMENT

CONTACTS HANDLE END	POSITIONS			
	CLOSE	STOP	PULL OUT TO STOP	OPEN
1 - 2	X	X		X
3 - 4	X	X		X
5 - 6	X			
7 - 8				X

X DENOTES CONTACT CLOSED. - SPRING RETURN TO STOP. - TO STOP & L.O. PULL OUT IN STOP POSITION.

REFERENCE DWG. PRWRA 23-X 406.01 W REV. 2

Fig. 504-2 Schematic electric control diagram for condenser circulating water valves.

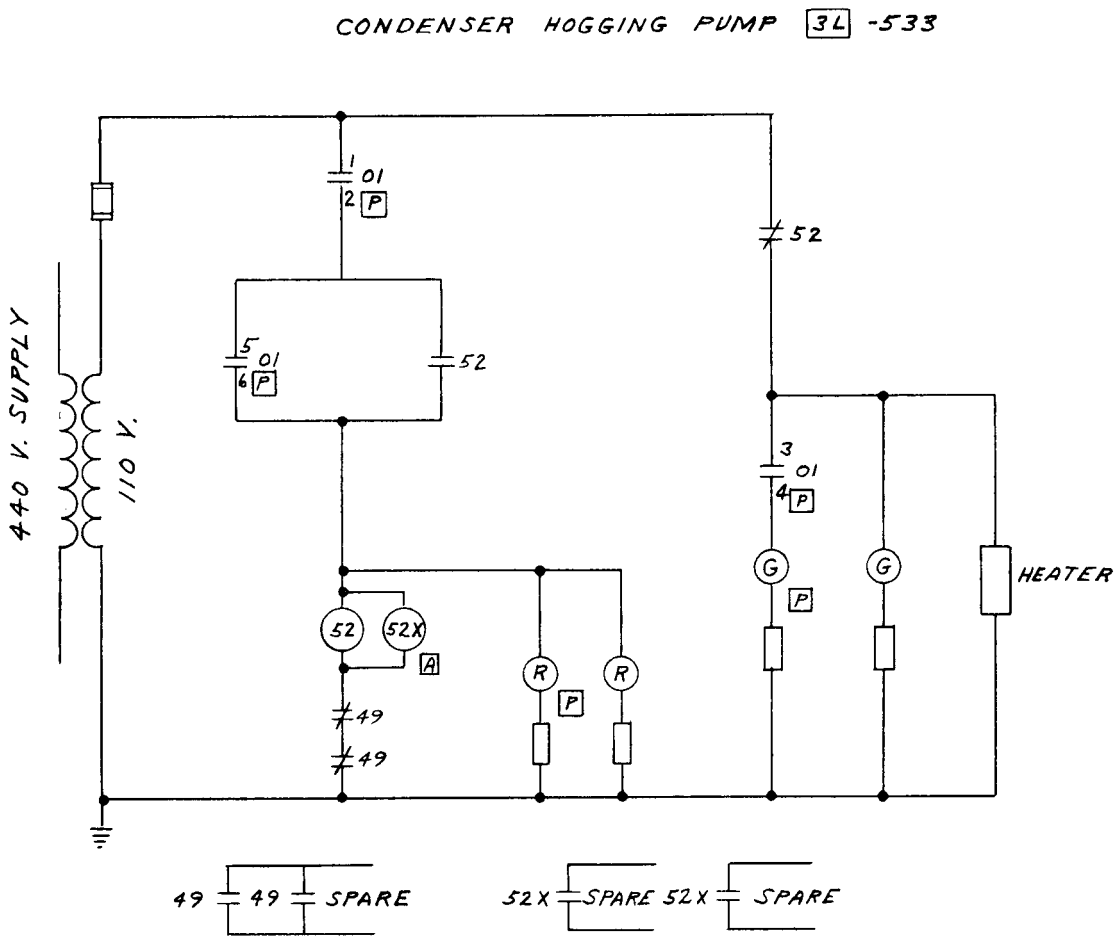

CONDENSER HOGGING PUMP
CONTROL SWITCH DEVELOPMENT

CONTACTS HANDLE END	POSITIONS START	NORM	STOP	L.O. ON STOP
1 - 2	X	X		
3 - 4	X	X	X	
5 - 6	X			
7 - 8	X	X		

X - DENOTES CONTACT CLOSED SPRING RETURN TO NORMAL - TO L.O. TURN TO STOP & PULL OUT.

REFERENCE DWG. PRWRA 23-X 406.02 W REV. 2

Fig. 504-3 Schematic electric control diagram for condenser hogging pump.

Fig. 502-11 Schematic electric control diagram generator excitation and voltage regulator.

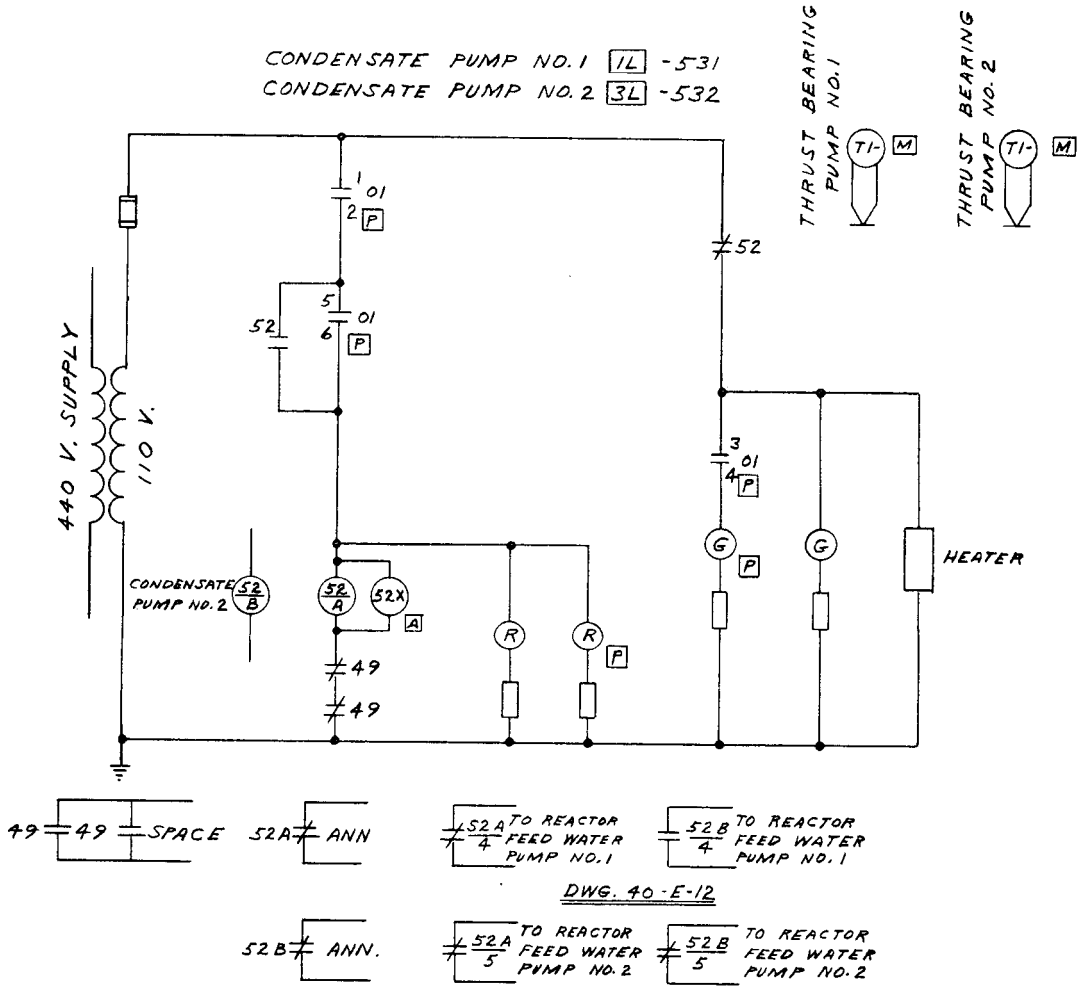

CONDENSATE PUMP NO. 1 & 2
CONTROL SWITCH DEVELOPMENT

CONTACTS HANDLE END	POSITIONS			
	START	NORM.	STOP	L.O. ON STOP
1 - 2	X	X		
3 - 4	X	X	X	
5 - 6	X			
7 - 8	X	X		

X - DENOTES CONTACT CLOSED. - SPRING RETURN TO NORMAL. - TO L.O. TURN TO STOP & PULL OUT.

REF. DWG. PRWRA 23-X406.02W Rev. 2

Fig. 504-4 Schematic electric control diagram for condensate pumps.

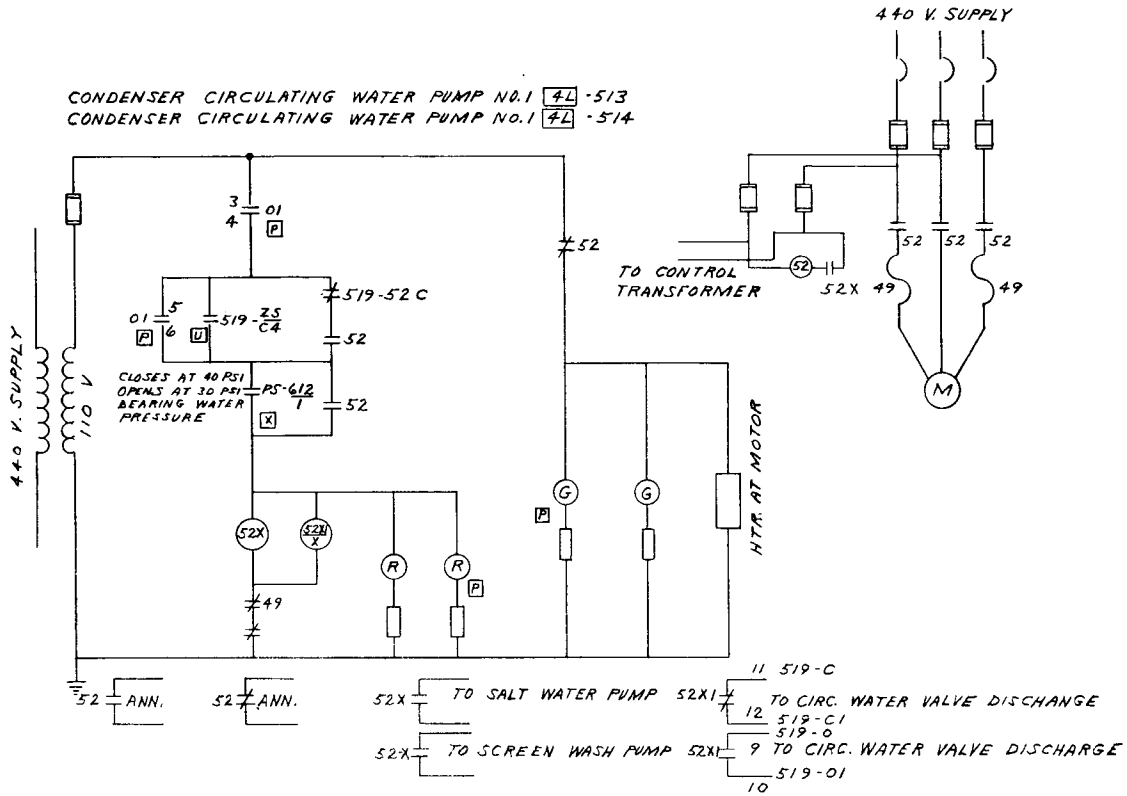

REFERENCE DWG. PRWRA 23-X 406.01 W REV. 2

CONDENSER CIRC. WATER PUMP NO. 1 & NO. 2
CONTROL SWITCH DEVELOPMENT

CONTACTS HANDLE END	POSITIONS START	NORM.	STOP	L.O ON STOP
1 - 2	X	X		
3 - 4	X	X	X	
5 - 6	X			
7 - 8	X			

X DENOTES CONTACT CLOSED. - SPRING RETURN TO NORMAL. - TO L.O. TURN TO STOP & PULL OUT.

Fig. 504-5 Schematic electric control diagram for sea water circulating pump.

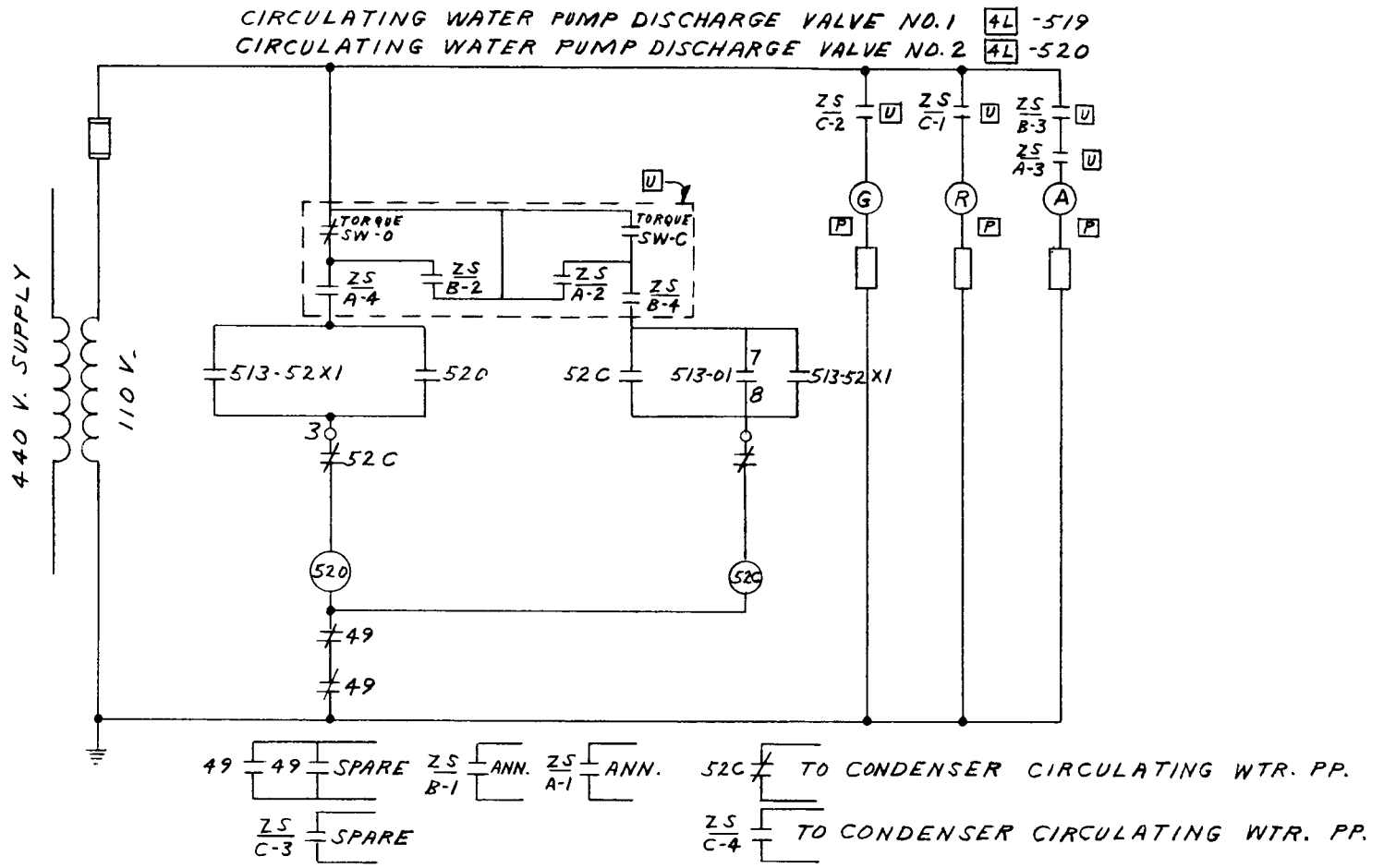

Fig. 504-6 Schematic electric control diagram for sea water circulating pump discharge valves.

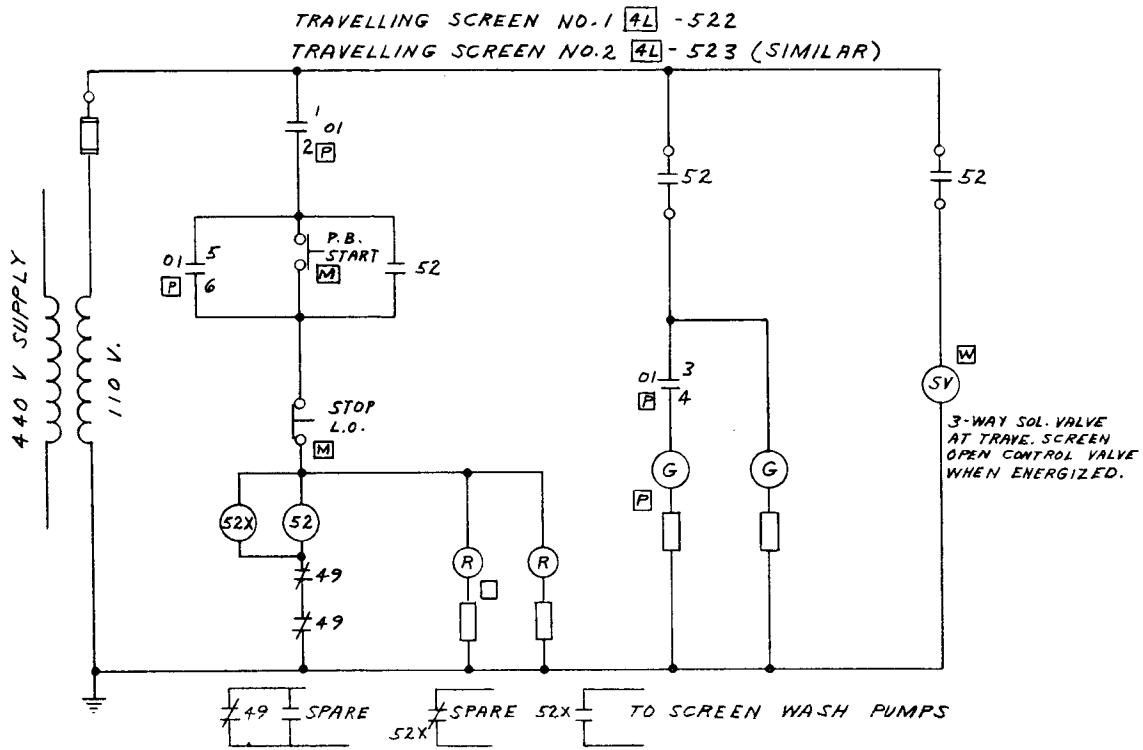

REFERENCE DWG. PRWRA 23-X406.01 W REV. 2

TRAVELLING SCREEN NO.1 & 2
CONTROL SWITCH DEVELOPMENT

CONTACTS HANDLE END	POSITIONS			
	START	NORM.	STOP	L.O. ON STOP
1 - 2	X	X		
3 - 4	X	X	X	
5 - 6	X			
7 - 8	X			

X DENOTES CONTACT CLOSED.-
SPRING RETURN TO NORMAL.-
TO L.O. TURN TO STOP & PULL OUT.

Fig. 504-7 Schematic electric control diagram for travelling screen.

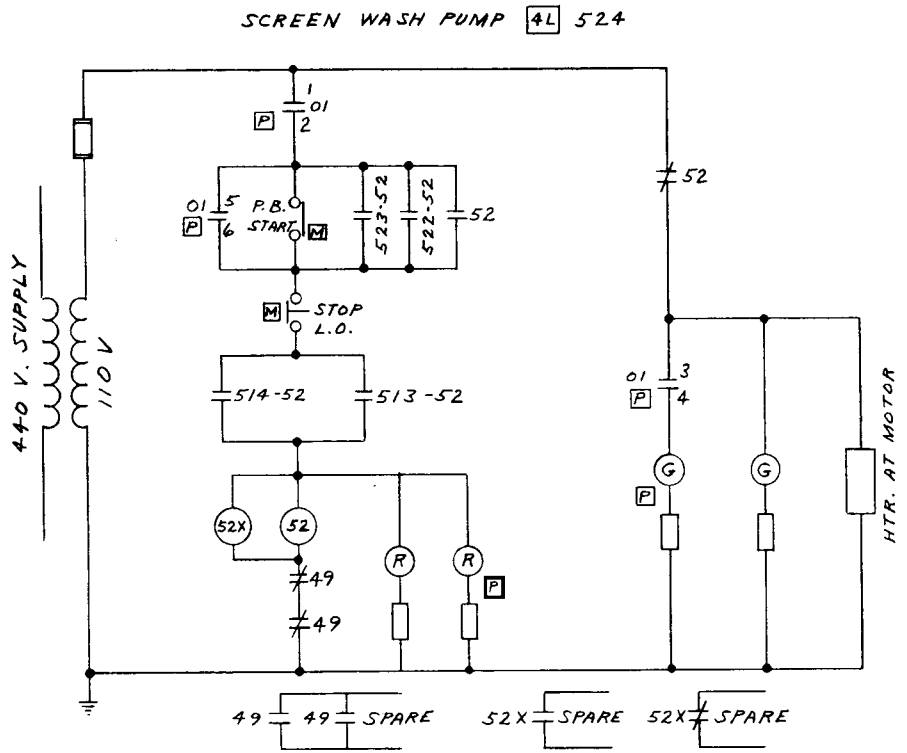

REFERENCE DWG. PRWRA 23-X 406.01 W REV. 2

SCREEN WASH PUMP
CONTROL SWITCH DEVELOPMENT

CONTACTS HANDLE END	POSITIONS START	NORM.	STOP	L.O. ON STOP
1 - 2	X	X		
3 - 4	X	X	X	
5 - 6	X			
7 - 8	X			

X DENOTES CONTACT CLOSED.-
SPRING RETURN TO NORMAL.-
TO L.O. TURN TO STOP & PULL OUT.

Fig. 504-8 Schematic electric control diagram for travelling screen wash pump.

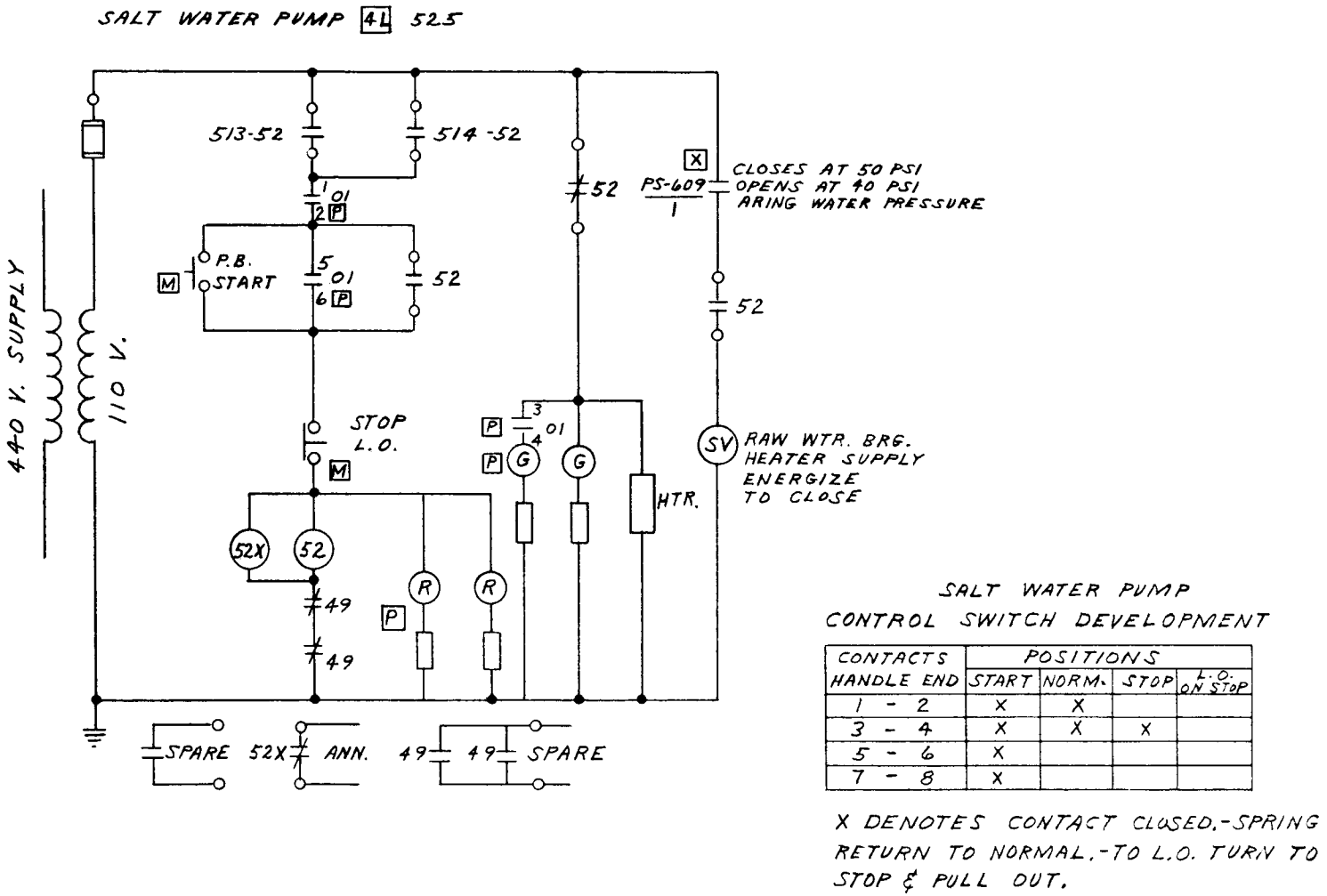

SALT WATER PUMP
CONTROL SWITCH DEVELOPMENT

CONTACTS HANDLE END	POSITIONS START	NORM.	STOP	L.O. ON STOP
1 - 2	X	X		
3 - 4	X	X	X	
5 - 6	X			
7 - 8	X			

X DENOTES CONTACT CLOSED.-SPRING RETURN TO NORMAL.-TO L.O. TURN TO STOP & PULL OUT.

REFERENCE DWG. PRWRA 23-X 406.01 W REV. 2

Fig. 504-9 Schematic electric control diagram for salt water pump.

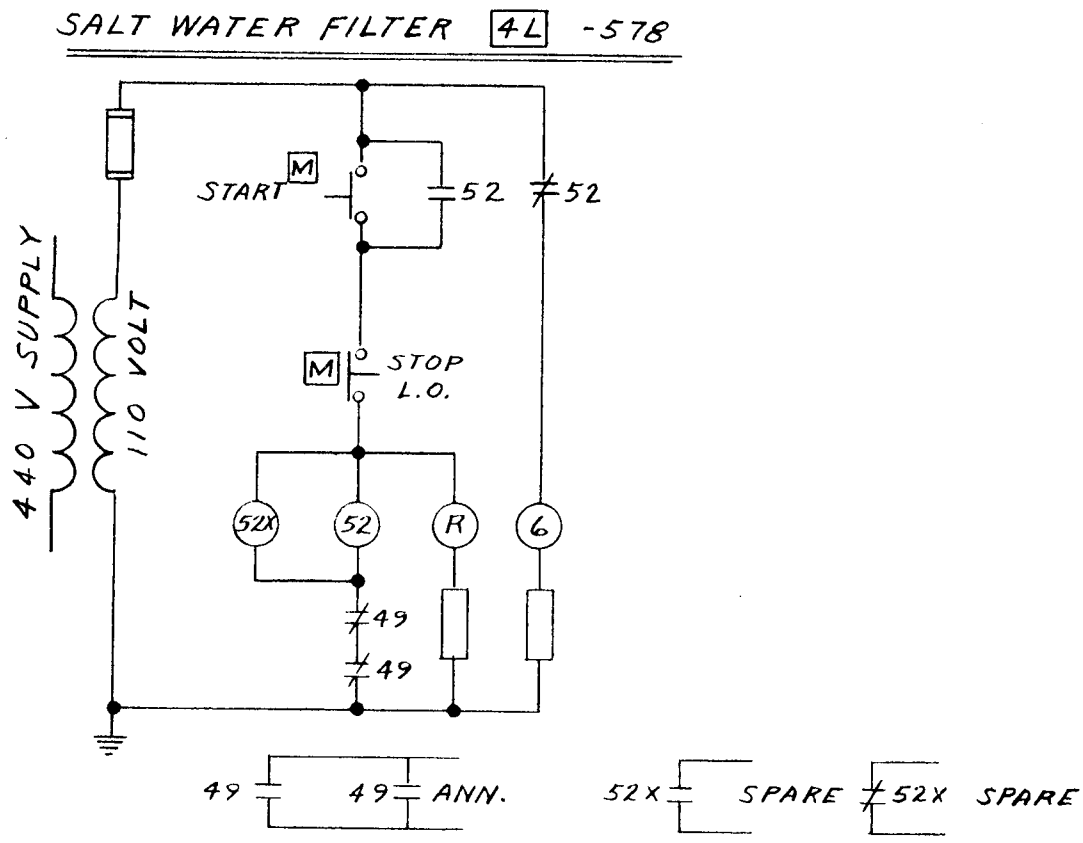

Fig. 504-10 Schematic electric control diagram for salt water motor operated filter.

505. CONDENSATE PURIFICATION SYSTEM

The condensate purification system serves two primary purposes: 1) it traps corrosion products from the carbon and low alloy steel portions of the turbine and the condenser, and prevents such corrosion products from getting into the reactor vessel and contributing to the corrosion product radioactivity problem; and 2) it removes any chlorides which may get into the feedwater through leakage of sea water into the main condenser and thereby protects the reactor stainless-steel components from damage by stress corrosion.

All of the condensate returned to the reactor as feedwater passes through the condensate purification units as shown in Fig. 505-1. These units are installed in the feedwater line immediately upstream of the No. 1 feedwater heater. The equipment used is basically the same combination of prefilters, ion exchange beds, and afterfilters that is used for the reactor purification loop. However, the condensate filter equipment is larger and the ion exchange beds are high flow rate units designed to allow the resins to be sluiced to regeneration tanks. There are two full-capacity prefilters connected in parallel followed by three half-capacity ion exchange beds and two full-capacity afterfilters. The components, piping, and instrumentation for the condensate purification system are shown in Fig. 505-2, and the electrical control circuits for the components and systems are shown in Fig. 505-3. Figure 505-4 is a single line diagram for this system.

Valves and piping are arranged so that one of each of the condensate demineralizers or condensate filter units may be isolated from the main flow circuit for servicing without reducing plant power output. After servicing is complete, these standby units will remain isolated until they are needed for emergency service or until the regular units have become exhausted. Whenever a standby demineralizer is brought on the line, its initial effluent will be run through one of the units already in service until the operator has verified that it is producing high-quality water. The series arrangement may also be used when a bed is nearing exhaustion to allow the full bed capacity to be used up without allowing any contaminants to enter the effluent feedwater.

Connections are provided to allow the resin to be transferred from any one of the demineralizer tanks to either the regeneration tanks or to waste drums. Sluicing pumps are used to force demineralized make-up water through the resin bed and thus flush the resins out through the sluicing lines connected to the bottom of each tank.

The prefilters (Filterite Corp. Model 60MR-3C-4F) are replaceable cartridge-type units with basket-type cellulose acetate removable filter elements.

Each filter assembly is designed for a flow rate of 310 gal/min with a pressure drop of 3 psi when clean and approximately 30 psi when

dirty. The filter assembly is capable of removing particles as small as 5 microns, and consists of 60 wound cellulose acetate filter elements mounted on 20 guide tubes which are held in a parallel array by perforated plates. These plates form the top and bottom of the removable assembly. A center tie rod extending from the top plate through the bottom plate holds the cartridge assembly together. The top plate is sealed to a ring seat welded to the inner wall of the filter tank by means of a captive O-ring. The water to be filtered is fed into the filter tank near the midplane of the filter assembly. The water flows through the tubular filter elements and into the guide tubes. Once inside the guide tubes the filtered water flows upward through the top plate into the chamber between the top plate and the vessel cover flange. From the upper chamber the water flows into the outlet nozzle welded into the side of the filter vessel.

A lifting fitting is attached to the center of the top plate for use in pulling the spent filter assembly up into the waste transfer cask.

Each filter tank is an ASME code vessel with an ID of 18 in. and an internal length of approximately 50 in. The tank is designed for an internal pressure of 300 psig at 125°F and has 3/8-in.-thick walls made of AISI 1020 steel. The lower end of the tank is closed by a standard ASME dished head, and the top cover consists of a flat steel plate 2-1/2 in. thick bolted to a 2-1/2-in.-thick gasket seat ring which is welded to the vessel. The sides and bottom of the tank are encased in 3 in. of lead which is in turn enclosed and supported by an outer casing of 1/2-in.-thick steel plate. The top flange is similarly equipped with 3 in. of lead shielding covered by steel plate. Sufficient overhang is provided on the top cover shield to prevent radiation streaming through the gasketed flange joint. Special bolts with long heads which extend above the lead shielding are used to hold the top flange in place. These bolts can be removed without disturbing the shielding. The tank is equipped with 4-in. inlet and outlet nozzles on the side, with a 1-in. drain in the bottom head, and with a 1-in. vent in the top flange. It is supported on three welded pipe legs which hold it in a vertical position approximately 12 in. off the floor.

The ion exchange beds for the condensate system are high flow rate mixed-bed units designed, built, and tested by Hungerford & Terry, Inc., containing 12.5 cu ft of IRA-400 anion resin and 12.5 cu ft of IR-120-L cation resin each. These 45-in.-deep beds are operated at 30 gal/min per sq ft, and have a pressure drop of 10 psi, (based on data from Industrial and Engineering Chemistry, September 1959, page 1051). The resins used are standard commercial grade, but they are screened to remove the finer particles to limit the pressure drop at the high flow rate used. Particle sizes from 16 to 40 mesh are used for these units.

The exchange capacity of the resin beds is 10 kilograins of $CaCo_3$ per cubic foot for both the anion and the cation resins. With an influent normally containing approximately 10 ppb Fe, 5.7 ppb Cu, 1.1 ppb Zn, 0.6 ppb Mn, and 0.4 ppb Co, these beds are guaranteed to

remove at least 90 percent of all entering ionic impurities and to produce an effluent with a specific resistivity of at least 10 megohm-cm. Although it is difficult to accurately predict bed life with such a low concentration of ions in the influent, it is expected that the normal service cycle for these units at full design flow will be approximately 1000 hours. For service as chloride traps, the beds are guaranteed to have a capacity of 6 kgr/cu ft of anion resin and to produce an effluent containing not more than 5 ppb of chloride ion with an influent chloride concentration of 85 ppm of chloride ions. This capacity gives each bed, when fully regenerated, the ability to hold all the chloride ions contained in 47 gallons of sea water in case any condenser inleakage occurs. Unless a condenser tube is completely severed, the time required for 47 gallons of sea water to enter the condenser is expected to be at least 70 minutes, which would be ample to allow an orderly shutdown for repair. Should some rare accident occur, such as a break in the last-stage blading on the turbine, which resulted in complete severence of one or more condenser tubes, the flow of feedwater must be cut off immediately and the reactor scrammed. The quantity of condenser inleakage which can be tolerated on a continuous basis will be determined by the cost of frequent regeneration of the beds. Since it takes approximately 2 to 3 hours to transfer and regenerate a single bed, it is obvious that the condenser inleakage cannot be allowed to exceed 15 gal/hr for any extended period if the plant is to remain in operation. At full power this maximum inleakage would give a chloride ion concentration of 16 ppm entering the condensate beds. However, previous experience with welded tube condensers has indicated that under normal conditions there is no measurable inleakage.

The tanks for the condensate demineralizers are 36-in.-OD carbon-steel (ASTM A212 Gr B) vessels lined with 3/16 in. of rubber. They are designed for 300 psig in accordance with the ASME Code Section VIII and are fabricated from 3/8-in.-thick plate with straight side walls 60 in. high and an over-all tank height of approximately 6 ft, 4 in. The exterior of each tank is shielded with 3 in. of lead in much the same manner as described for the prefilters.

Necessary tank nozzles are provided as follows: one 3-in. condensate and resin inlet near the top of the tank sidewall; one 3-in. condensate outlet in the bottom of the tank; one 2-1/2-in. resin sluicing outlet; and one 1-1/2-in. air vent in the top head. A 16-in.-ID flanged access opening is also provided in the top at each tank. Under-drains with radial laterals of polyvinyl chloride are bolted to the condensate outlet flange inside the tank bottom. Similarly, an inlet distributer header is bolted to the inner face of the main condensate inlet in the upper part of the tank.

The after-filters are physically identical to the prefilters. They collect any resin fines which may be formed during regeneration or transfer operations, and also any filterable materials which may be leached from the resin beds during the service cycle. Because they are expected to have a much longer service life than the prefilters.

Regeneration of the condensate resin beds is accomplished in two separate regeneration tanks. The unit to be regenerated is taken out of service and the resins are sluiced into the cation regeneration tank. The resin transfer is done under manual control with the aid of the sluicing pump. Once all the resins are in the cation tank, they are hydraulically separated into two layers by backwashing with enough water to fluidize the bed. Overflow from the backwash is sent to a waste neutralizing tank. After the resins have settled into two distinct layers, the upper layer of anion resin is sluiced into the adjacent anion regeneration tank through a line connected to the cation tank near the midplane of the resin bed. Sulfuric acid is then pumped into the first tank to regenerate the cation resin at 19 gal/min. The 3 wt.% acid needed for regeneration is obtained by pumping concentrated acid direct from the 3,000-gal acid storage tank outside the building through a mixing chamber. In this chamber the acid is mixed with the proper quantity of softened water to give the desired concentration and then is allowed to flow on to the cation regeneration tank. The effluent from the acid regeneration also flows into the waste neutralizing tank.

Regeneration of the anion resin with caustic is accomplished in the second tank using essentially the same procedure as that described for the cation resin regeneration. However, in this case the dilution water fed to the caustic mixing chamber is heated by a 40-kw electric heater to give the 4 wt.% NaOH solution leaving the chamber the desired 120°F temperature for regeneration of the anion resin. The flow rate of dilute caustic into the anion regeneration tank is 7 gal/min. The effluent is allowed to flow into the waste neutralizing tank to mix with the acid effluent from the cation resin. After the regenerants (410 gal of 4 per cent H_2SO_4, and 380 gal of 4 per cent NaOH) have passed through the resins, each bed is given a slow rinse with soft water at 7 to 14 gal/min followed by a fast rinse at 25 gal/min for approximately 20 min. The cation resin is then sluiced into the anion tank and the combined bed is remixed by backwashing it with a small quantity of demineralized water and stirring it with 28 cfm of compressed air for 8 min. The mixed resins are finally sluiced back into the condensate demineralizer tank with demineralized water.

The regeneration tanks are twin vertical units, 36 in. OD by 8-ft, 0 in. straight side of shell made of 3/16-in. carbon steel lined with 3/16 in. of rubber. The tanks are designed for 100 psi in accordance with Section VIII of the ASME Code. These tanks are not encased in lead but are located inside a compartment with 1.5-ft walls of ordinary concrete. Each tank is equipped with the necessary connections for resin transfer, regenerant solutions, rinse water, waste drains, etc., as indicated on the flow diagram. Internal distributor headers at the top of the tank and just above the level of the resin to be regenerated are made of polyvinyl chloride pipe and fittings. Underdrains are also made of polyvinyl chloride.

The transfer of resins to regeneration and separation of the anion resins from the cation resins is accomplished by local manual control

of valves and pumps. Sequencing of valves for the regeneration and rinse operations is automatically controlled by program timers. The control switches, indicating lights, multipoint conductivity recorder, and differential pressure indicators for the condensate purification systems are mounted on a control panel located just outside the regeneration compartment. If the conductivity of the effluent from any unit exceeds a preset value, the recorder trips a local alarm to warn the operator that the unit is exhausted. Differential pressure indicators for the reactor purification system are mounted on this same panel. In addition to the local panel instruments, conductivity cells are provided for the effluent from each half of the divided hotwell on the main condenser and for the mixed effluent from the condensate purification units. The readings from these cells are recorded in the main control room (CR-1); the recorder is equipped with alarm contacts which trip annunciator 5 on main control panel D if any of the conductivity readings exceed the desired range of values.

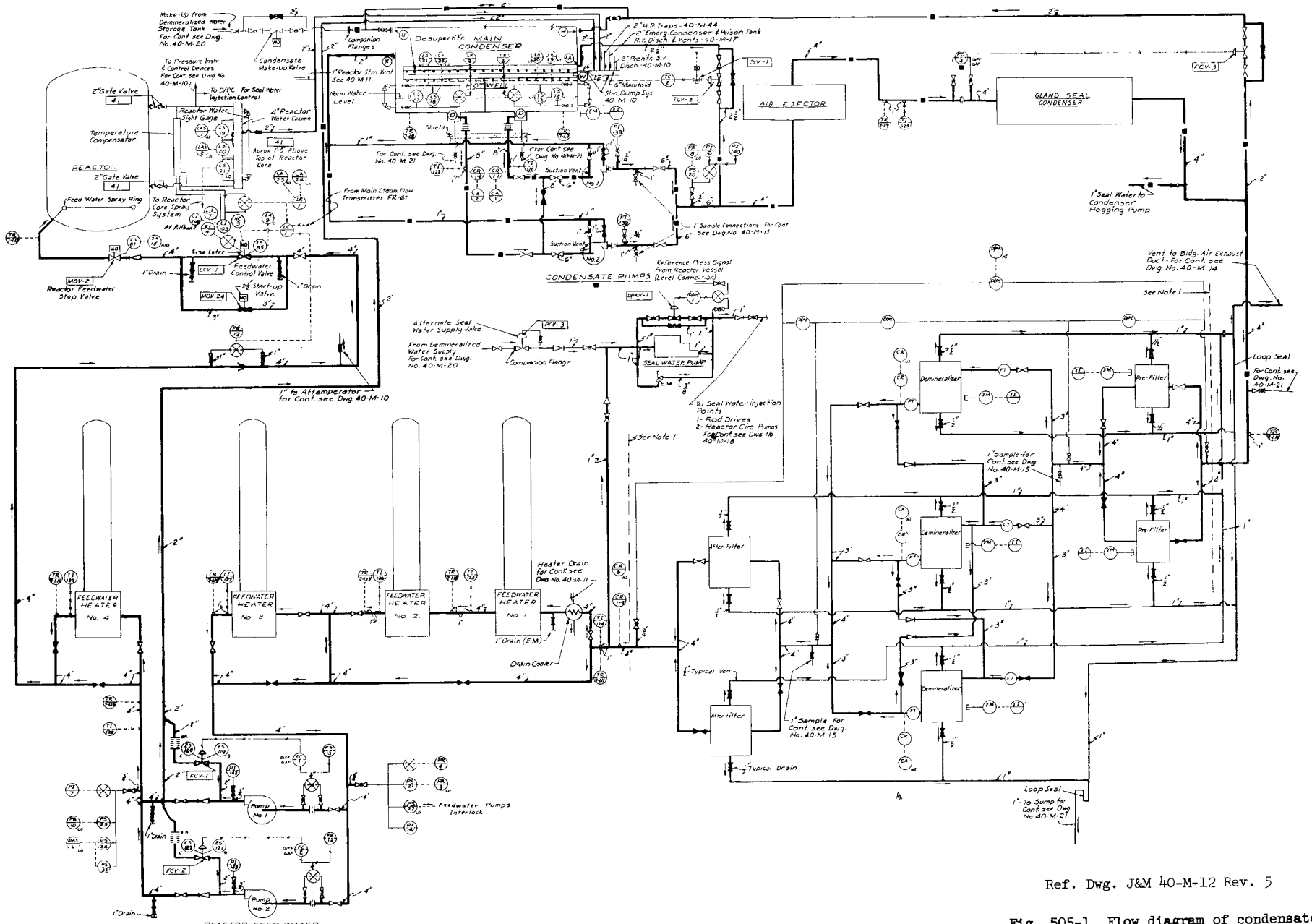

Ref. Dwg. J&M 40-M-12 Rev. 5

Fig. 505-1 Flow diagram of condensate, condensate purification, and reactor feedwater systems.

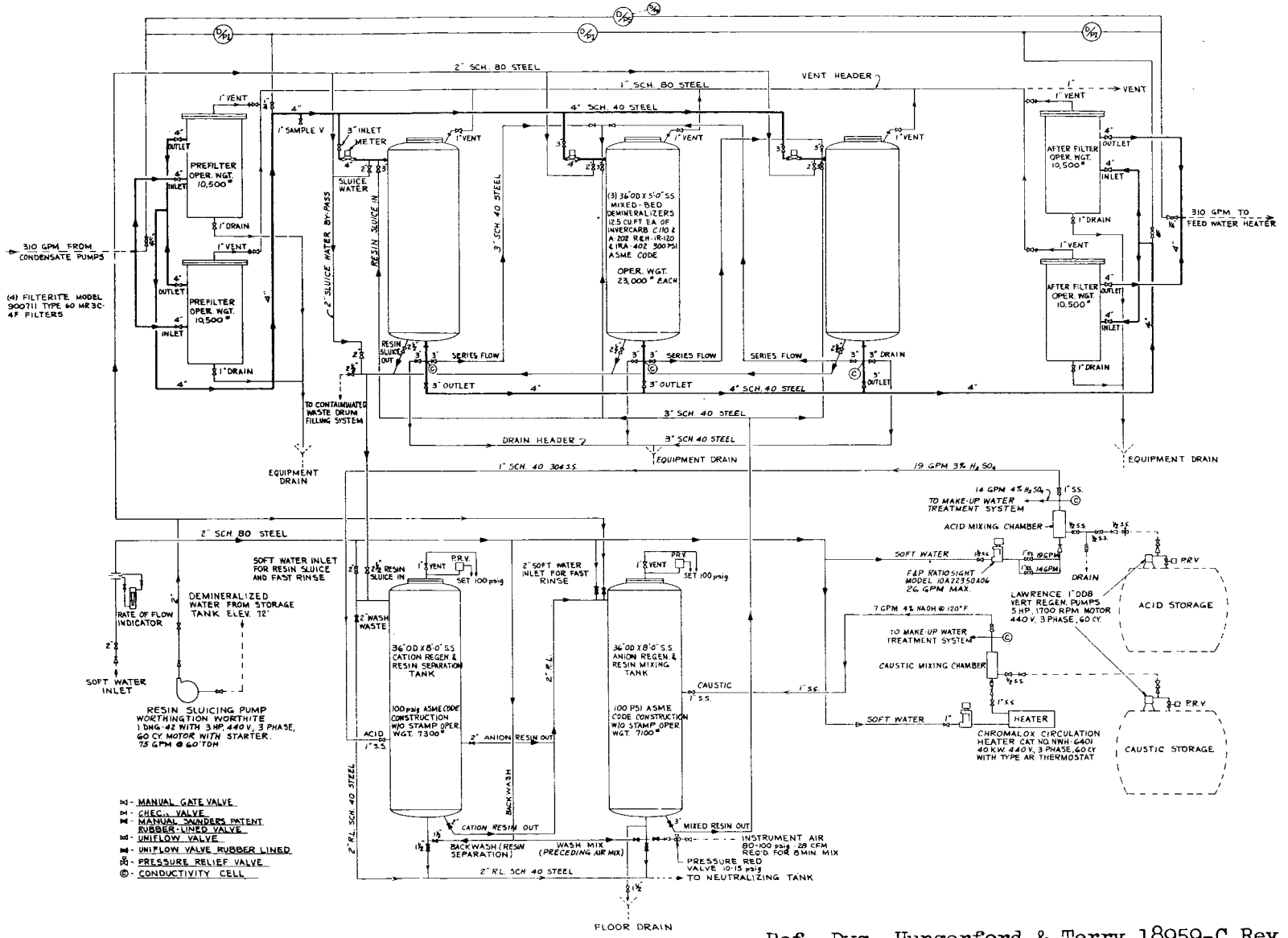

Ref. Dwg. Hungerford & Terry 18959-C Rev. 4

Fig. 505-2 Flow diagram of condensate purification and regeneration system.

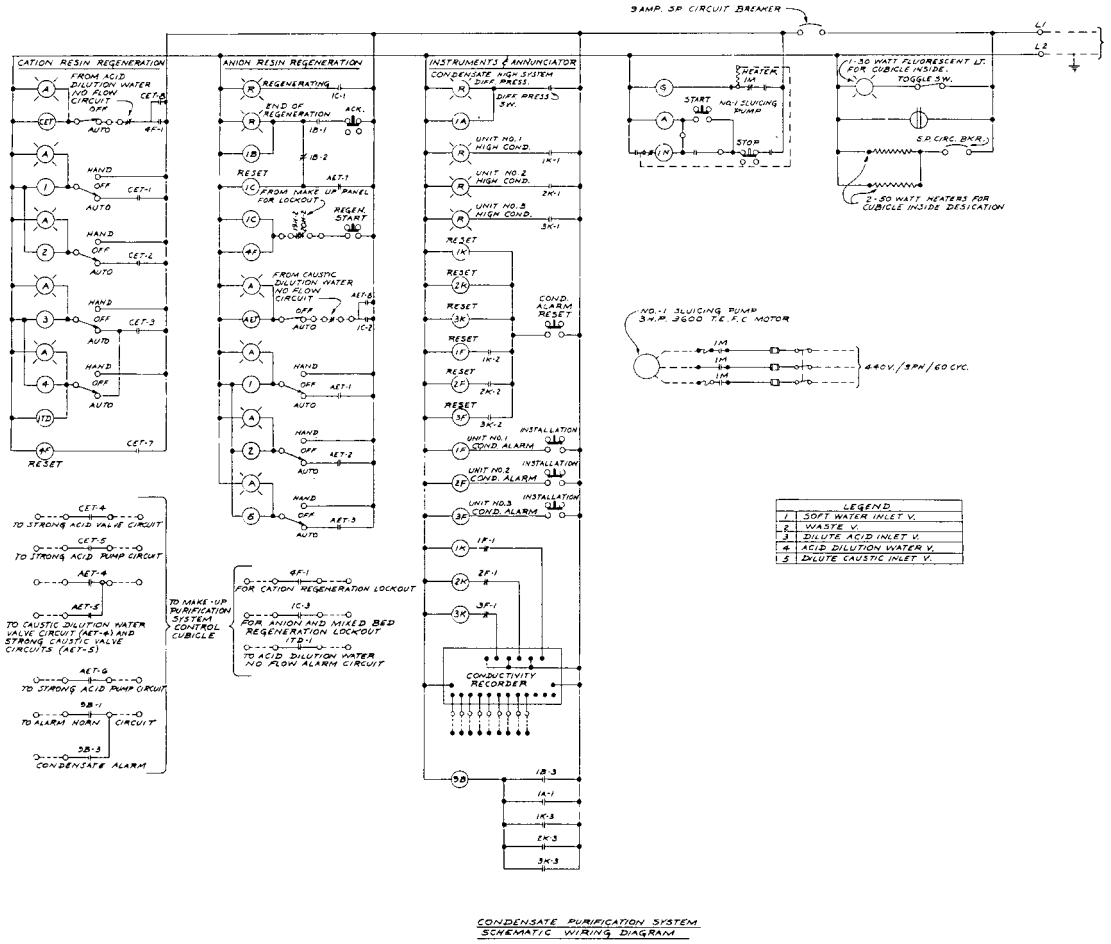

CONDENSATE PURIFICATION SYSTEM
SCHEMATIC WIRING DIAGRAM

Ref. Dwg. Hungerford & Terry 18959-5 Rev. 6

Fig. 505-3 Schematic wiring diagram of condensate purification and regeneration system.

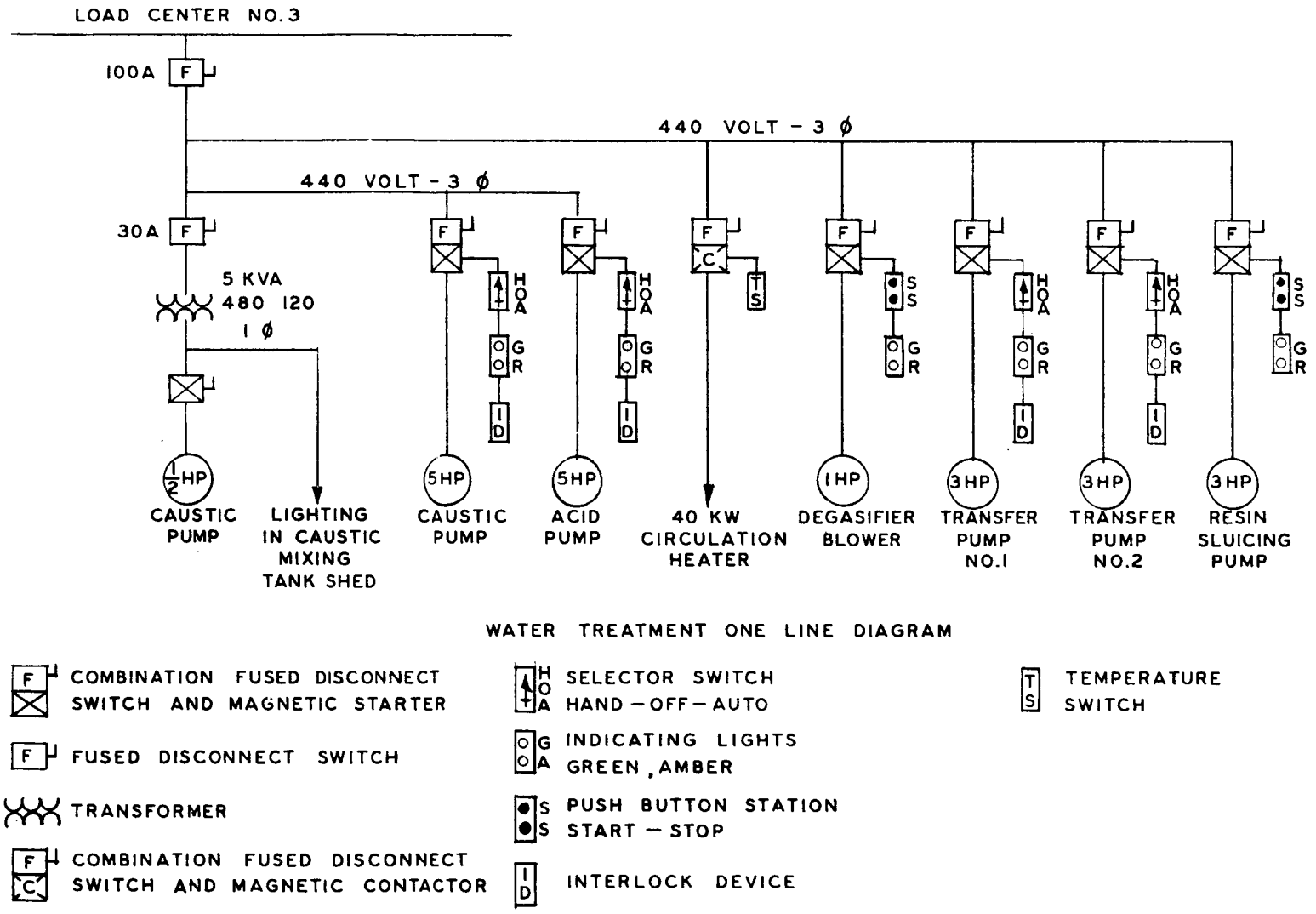

Fig. 505-4 Single-line diagram of condensate water treatment system.

506. FEEDWATER HEATERS

There are four closed feedwater heaters in the feedwater circuit. Figure 505-1 shows the feedwater flow path; Fig. 501-1 shows schematically the extraction steam piping to the respective heaters, and Figs. 506-1 and 506-2 show the schematic and perspective arrangement of the drain and vent piping.

Extraction steam from the turbine enters the feedwater heaters and is condensed. Heater drains cascade from heater to heater, and then to the main condenser. Heater material data are listed in Table 506-1; operating data for each heater are listed in Table 506-2.

Heaters 2, 3, and 4 have internal drain coolers; heater No. 1 has an external horizontal drain cooler. With this arrangement, all the steam extracted from the turbine is condensed and delivered to the condenser hotwell; the condensate is then passed through the condensate purification system which removes all corrosion products before the condensate is returned to the reactor.

The heaters are vertical, channel end down, "U"-tube multipass type designed and built by the Maryland Shipbuilding and Drydock Co. In order to prevent the cascaded condensate from eroding the tubing, heaters 1, 2, and 3 each have an external carbon-steel flash pot with a renewable stainless-steel impingement plate. Heaters 3 and 4 have internal steam desuperheating sections.

Heater condensate piping is provided with manual isolation and bypass valves so that heaters or groups of heaters can be removed from service without interrupting plant operation. Removable concrete shield hatches are provided in the turbine floor over each heater to permit removing the heater shell — by flame-cutting the joint between the shell and channel — for inspection of the tube bundle. Heaters 3 and 4 can each be isolated; however, to service either heater No. 1 or No. 2, both heaters must be isolated and bypassed. The tube side of each heater has a relief valve (Consolidated Model 3/4 1975C) to protect against overpressure in case the tube side is isolated when water-filled and steam is admitted to the shell side. The tube side set relief pressure for drain cooler and heaters Nos. 1, 2, and 3 is 250 psig; heater No. 4 is set for 1600 psig. The shell side of each heater is provided with a flanged, bellows sealed safety valve, set to open at the design pressure and discharge to the condenser. Vent lines containing orifice plates are also provided on the shell side of each heater to continuously bleed steam and noncondensible gases to the condenser. The diameter of each orifice is shown in Table 506-2.

The heaters are designed in accordance with the ASME Unfired Pressure Vessel Code, Section VIII and are of standard construction throughout;

Table 506-1 HEATER MATERIAL DATA

	No. 1 Heater	No. 1 Drain Cooler	No. 2	No. 3	No. 4
	150 Tubes	56 Tubes	204 Tubes	160 Tubes	160 Tubes
U-Tubes 5/8 in. OD, 18 BWG	← Inhibited Admiralty Metal ASTM B111 Type B →				Nickel Copper Alloy ASTM B163
Shell	22 in. OD A53 Gr B Seamless	12-3/4 in. OD A106 Gr B	22 in. OD A53 Gr B Seamless	20 in. OD A106 Gr B	22 in. OD A106 Gr B
Tube Sheet	A212 Gr B	A212 Gr B	A212 Gr B	A212 Gr B	A266 Gr II
Tube/Tube Sheet Joint	Rolled	Rolled	Rolled	Rolled	Rolled & Seal Welded
Channel	A106 Gr B	A106 Gr B	A53 Gr B	A106 Gr B	A266 Gr II
Bolted Channel Cover	A212 Gr B	A212 Gr B	A212 Gr B	A212 Gr B	A266 Gr II

Table 506-2 OPERATING CONDITIONS FOR FEEDWATER HEATERS

Heater No. 1

	Shell Side, Steam	Shell Side, Drains	Tube Side
Flow rate in, lb/hr	8177	25,374	152,093
Flow rate out, lb/hr	0	33,551	152,093
Temperature in, °F	180	195	108
Temperature out, °F	-	123	175
Enthalpy in, Btu/lb	1104	163	76.0
Enthalpy out, Btu/lb	-	90.9	142.9
Pressure drop at full flow, psi			9.3

Design Pressure: Shell side, 50 psi - Tube Side, 250 psi
Design Temperature: Shell side, 250°F - Tube Side, 250°F
Shell Vent Orifice: 13/32 inches

Drain Cooler No. 1 - Design Data

	Shell Side	Tube Side
Flow rate, lb/hr	33,551	152,093
Pressure drop at full flow, psi	2.3	6.7

Design Pressure: Shell Side, 50 psi - Tube Side, 250 psi
Design Temperature: Shell Side, 250°F - Tube Side, 250°F

Heater No. 2

	Shell Side, Steam	Shell Side, Drains	Tube Side
Flow rate in, lb/hr	8303	17,071	152,093
Flow rate out, lb/hr	-	25,374	152,093
Temperature in, °F	249	251	175
Temperature out, °F	-	195	236
Enthalpy in, Btu/lb	1164.2	219.5	142.9
Enthalpy out, Btu/lb	-	163.0	204.3
Pressure drop at full flow	-	2.0	5.0

Design Pressure: Shell Side, 50 psi - Tube Side, 250 psi
Design Temperature: Shell Side, 300°F - Tube Side, 300°F
Shell Vent Orifice: 7/32 in. dia.

Table 506-2 (Continued)

Heater No. 3

	Shell Side, Steam	Shell Side, Drains	Tube Side
Flow rate in, lb/hr	7298	9,773	152,093
Flow rate out, lb/hr	-	17,071	152,093
Temperature in, °F	400	305	236
Temperature out, °F	-	251	287
Enthalpy in, Btu/lb	1,233.5	274.7	204.3
Enthalpy out, Btu/lb	-	219.5	256.2
Pressure drop at full flow		1.5	7.3

Design Pressure: Shell Side, 75 psi - Tube Side, 250 psi
Design Temperature: Shell Side, 450°F - Tube Side, 350°F
Shell Vent Orifice: 1/8 in. Dia.

Heater No. 4

	Shell Side, Steam	Shell Side, Drains	Tube Side
Flow rate in, lb/hr	9,773	-	152,093
Flow rate out, lb/hr	-	9,773	152,093
Temperature in, °F	566	-	290
Temperature out, °F	-	305	353.5
Enthalpy in Btu/lb	1,308.1	-	261.1
Enthalpy out, Btu/lb	-	274.7	327.1
Pressure drop at full flow	1.4	1.0	7.4

Design Pressure: Shell Side, 175 psi - Tube Side, 1600 psi
Design Temperature: Shell Side, 600°F - Tube Side, 375°F
Shell Vent Orifice: 3/32 in. dia.

all heaters bear the ASME code stamp. Monel tubes are used in heater No. 4 to minimize corrosion problems caused by the oxygen in the extraction steam to the shell side of the heater. Because of the lower temperatures in heaters Nos. 3, 2, and 1, corrosion will not be a problem with the admiralty metal tubes in those heaters.

The water level in each of the heaters is maintained at a constant level, within ± 1.5 in., by a pneumatic-float-operated Torque-tube-type level controller (Black Sivalls & Bryson Model 71-06-2) which regulates the opening of the drain control valve on the heater, and thus controls the saturated water drain quantity discharged to the next lower pressure heater. The normal, high, and low water levels for each heater are given in Table 506-3.

Table 506-3 NORMAL HIGH AND LOW WATER LEVELS FOR EACH HEATER

Heater No.	Normal W.L. Elev.	High W.L. Above Normal	Low W. L. Below Normal
No. 1	20 ft-1-1/4 in.	+ 2 in.	- 2 in.
No. 2	24 ft-5-1/2 in.	+ 2	- 2
No. 3	23 ft-9-1/2 in.	+ 2	- 2
No. 4	23 ft-10 in.	+ 6 in.	- 2 in.

To protect against high water levels in the heaters, due to malfunctioning of the drain control valves, provision is made to discharge the drains from heaters No. 3 and 4 directly to the condenser. For these two heaters the normal drain control valves are backed up by parallel air-operated valves which automatically open on high water level. These valves can also be opened by the operator at his discretion by deenergizing the three-way air solenoid valves in the loading line to the valve diaphragm operators by actuation of the control toggle switches on the control panel. The status of the water level in each heater is indicated in the control room and is actuated by a separate level-sensing pneumatic differential pressure transducer (Foxboro Model 13LA) mounted on each heater. To advise the operating staff of a malfunction in the heater control system, a pressure switch in the output signal line to the indicator initiates a high level alarm when the level rises 2 in. above normal in heaters 1, 2, and 3 or 6 in. above normal in heater No. 4. To protect the turbine from condensate entering it due to excessive high levels in the heaters, separate flanged cast-steel-ball-float-operated hi-level controls mounted on heaters Nos. 2, 3, and 4, automatically trip closed the non-return valves in the steam extraction lines to these heaters. When the hi-level float control is actuated, an integral limit switch on the unit closes its contacts and actuates an annunciator circuit.

The nonreturn valves in the extraction lines to heaters Nos. 2, 3, and 4 are the conventional power plant type in design and construction. Each of the three cast-steel-body valves is the tilting-disc type having butt-welded ends, spring-loaded air-actuated cylinders, and water-sealed stuffing boxes; each valve is provided with an integral hand-operated testing valve and limit switch assembly for future indicating in the control room of the open and closed positions of each valve. During normal extraction service the valves are in the wide open position, and air pressure is on the respective air cylinders; each valve functions freely as a swing check valve; when the outlet and inlet pressures are equal each valve swings to the closed position.

The three extraction valves will automatically close, by releasing the air pressure from the valve operating cylinders on a signal from the air pilot valve in the turbine control oil system. Each respective valve closes if the level in the associated heater is high or if air pressure is removed from the operating cylinder.

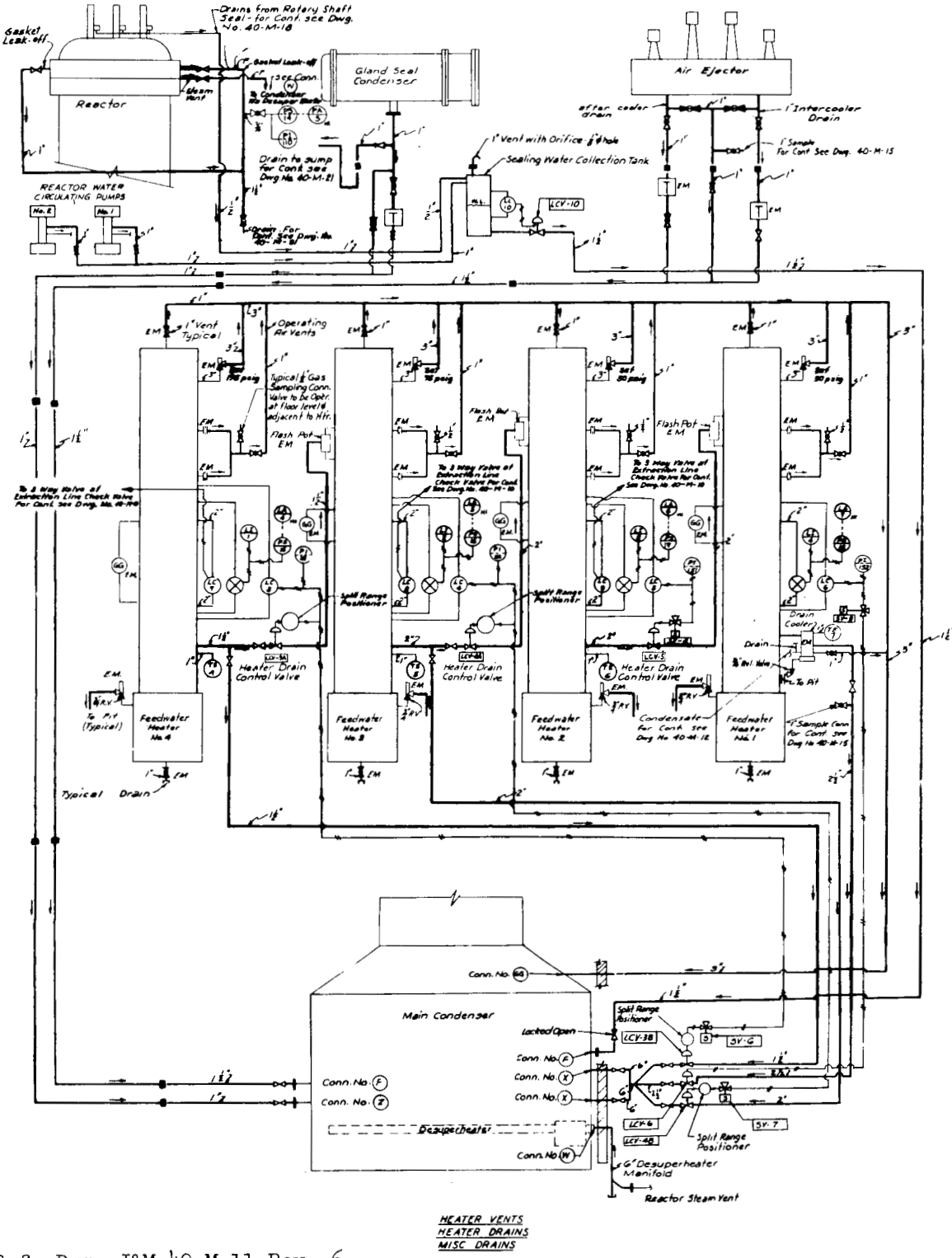

Ref. Dwg. J&M 40-M-11 Rev. 6

Fig. 506-1 Flow diagram of feedwater heater drain and vent piping.

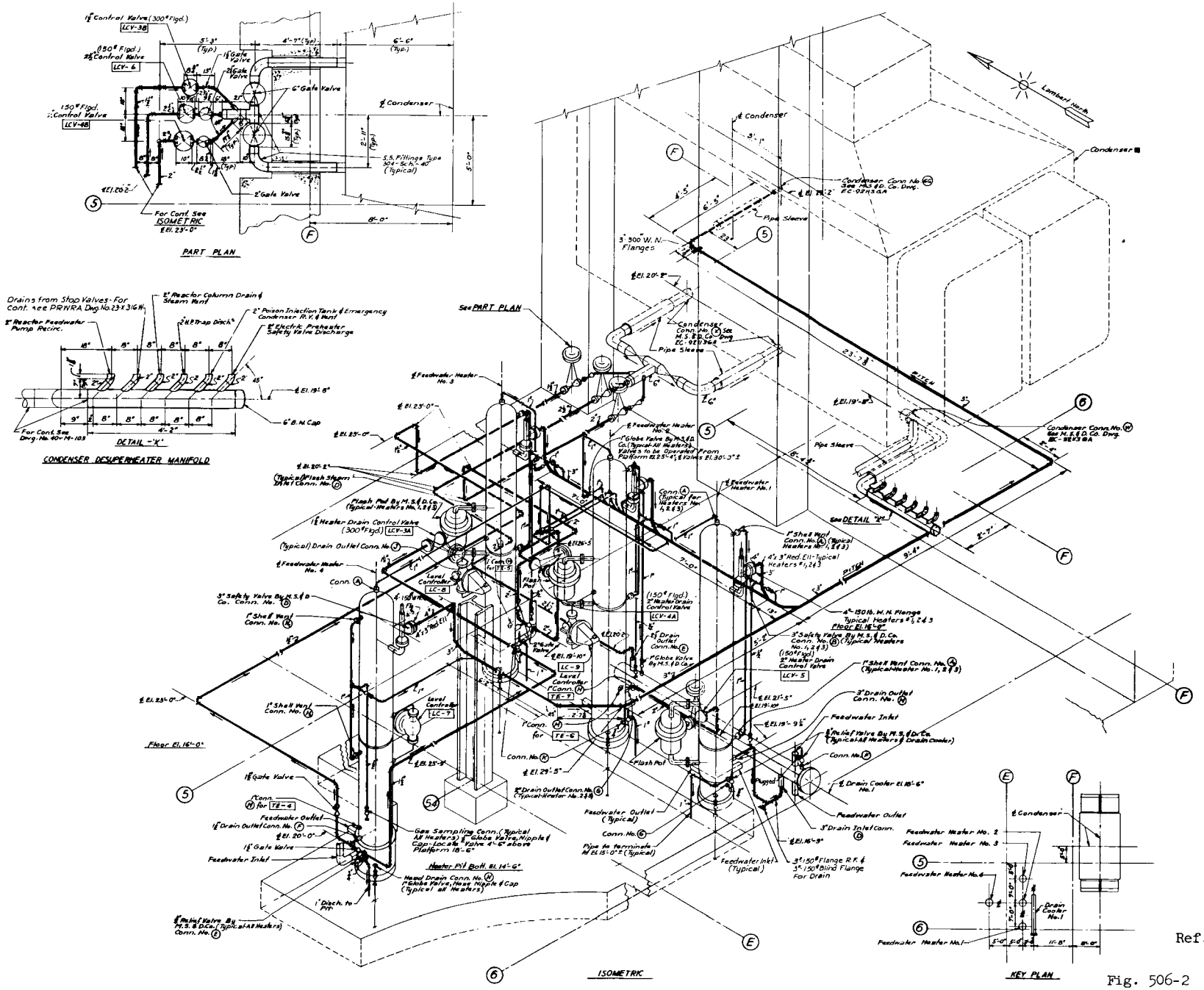

Ref. Dwg. J&M 40-M-46 Rev. 2

Fig. 506-2 Perspective drawing of feedwater heaters, showing vent and drain piping.

507. REACTOR FEEDWATER PUMPS

The two 60%-capacity reactor feedwater pumps return the condensate from feedwater heater No. 3, through the last feedwater heating stage to the reactor vessel feedwater spray ring. The location of the feedwater pumps in the flow cycle, and the piping and instrumentation associated with the pumps, are shown in Fig. 505-1; Fig. 507-1 illustrates the control circuitry for the pump drives.

The pumps (Pacific Pumps Inc. Type BFJTCMB) are 10-stage, opposed-impeller centrifugal-type units, with horizontal split casing, 4-in. ASA STD 300-lb R.F. side suction flange, 2-1/2-in. butt weld side-discharge flange, and pressure-lubricated sleeve journals and Kingsbury thrust bearings. The pump and drive motor are all mounted on a common steel baseplate which also supports the 25-gal oil reservoir, the Browne & Sharpe 1/2-hp motor-driven auxiliary gear oil pump, the Ross oil cooler, and the shaft mechanical seal coolers.

The pump drive motor is rated at 200 hp, 440 volt, 3 phase, 60 cycle; it is squirrel cage, induction type, drip-proof, force-feed lubricated, and protected against moisture when not running by a 368-watt space heater. The design conditions for each pump are listed in Table 507-1.

Table 507-1 DESIGN CONDITIONS FOR REACTOR FEEDWATER PUMP

Capacity lb/hr	90,000
Gal/min. at Pumping Temperature	195
Suction Temperature, °F	290
Net Positive Suction Head Required, ft	12
Discharge Pressure, psig	1060
Inlet Pressure, psig	50
Diff. Head	2520 ft

Figure 507-2 shows the performance curves for each pump. The materials of construction for each pump are listed in Table 507-2.

Table 507-2 MATERIALS OF CONSTRUCTION FOR REACTOR FEEDWATER PUMP

Casing	11-15 per cent chrome steel
Shaft	11-15 per cent chrome steel
Shaft Sleeves	11-15 per cent chrome steel
Impellers	11-15 per cent chrome steel
Spacer Sleeves	17 per cent chrome steel
Diffusers	11-15 per cent chrome steel
Intermediate Covers	11-15 per cent chrome steel
Intermediate Cover Bushings	17 per cent chrome steel
Case Wearing Rings	17 per cent chrome steel
Impeller Wearing Rings	17 per cent chrome steel
Pressure Reducing Bushing	17 per cent chrome steel
Radial Bearing	Babbit lined

The mechanical seals at the thrust bearing and coupling ends are the self-pumping type, and circulate the seal water through Helicoil-type heat exchangers, (one for each end seal) and back to the pump casing. In addition, the seal and packing housings are water jacketed and are cooled by the 90°F auxiliary cooling water system to maintain the packing and mechanical seals at low temperatures. The outlet cooling water temperature, set by adjusting the valves in the inlet cooling water lines at the pumps, will be maintained at 105°F. The total cooling-water flow required per pump for the lube oil, seal, and jacket coolers is 30 gal/min, with 10 gal/min flow to the oil cooler and the remainder to the jacket and seal coolers.

Normal lubrication of the bearings is provided by an integral shaft-driven gear pump. The auxiliary oil pump serves as a backup unit, and automatically takes over the lubrication function if the oil pressure drops below 5 psig. The auxiliary oil pump, which is required during startup and shutdown of the feedwater pump, must be in service prior to starting the feedwater pump. After the correct oil pressure is established by starting the unit locally with the three-position control switch mounted on the feedwater instrument rack panel, the feed pump can then be started after the indication that normal pressure has been reached is received in the control room. After the feed pump has been started and the auxiliary pump local controls set for automatic operation, the auxiliary oil system is in readiness to start in case of a normal feed pump shutdown or an enforced emergency shutdown. The electrical circuitry for each auxiliary oil pump is shown in Fig. 507-3.

The two reactor feedwater pumps are located on the basement floor level and outside the west shield wall of the feedwater heater compartments, as shown on Fig. 906-5; the dose rate from the N^{16} activity in the condensate is expected to be less than design 2.5 mrem/hr level in this area due to the removal of the major portion of the N^{16} in the air

ejectors, to the 4.9-min holdup time in the condenser hotwell, and to the additional delay time in passage through the condensate purification system and the three feedwater heaters.

Electrical control interlocks prevent the pumps from being remotely started from the control room until, as mentioned previously, the auxiliary oil pumps are in service and, also, until the two half-capacity condensate pumps are delivering the required head at the feedwater pump suction. A pressure switch which senses suction header pressure and set to close at 60 psig and open at 50 psig serves as the interlock to protect the feedwater pumps from cavitating if the condensate pumps fail to produce the required head. The pressure switch is mounted with the pump suction and discharge pressure indicators, and pressure transducers for remote recording in the control room, on the feedwater instrument rack shown in Fig. 803B-18.

The reactor feedwater pumps are also electrically interlocked with the reactor control-rod electromagnetic clutch circuit; the control-rod actuators cannot be engaged to the drive circuit until the motors of both reactor feedwater pumps are energized and until the discharge header pressure is above 1000 psig. Two pressure switches mounted on the same instrument rack mentioned previously open their single pole contacts if the pressure is below 1000 psig to either prevent rod withdrawal or initiate a reactor scram if the plant is running and low feedwater header pressure results. However, prior to trip-out, if the header pressure drops below 1050 psig the operator is warned of this situation by the annunciation of the low-pressure alarm which is initiated by the closing of a pressure switch provided for this warning function. The operator is also advised by the annunciator system if either pump is not running.

The startup of each pump will be carried out with both the reactor feedwater motor operated stop valve and feedwater control and bypass valves closed. During startup and for low loads, the pump discharges 40 gal/min directly to the condenser to protect the unit from overheating. The bypass recirculation line for each pump contains an air-operated flow-controlled valve and a flow-restricting orifice which takes the large pressure drop. The recirculation control valve automatically tends to maintain the flow in the pump suction line containing a flow-measuring orifice at the specified 40 gal/min. The control valve is fully closed when the flow rate is higher than 40 gal/min. For record purposes the flow delivered by each pump is individually measured on the recorder instrument mounted on the feedwater instrument rack.

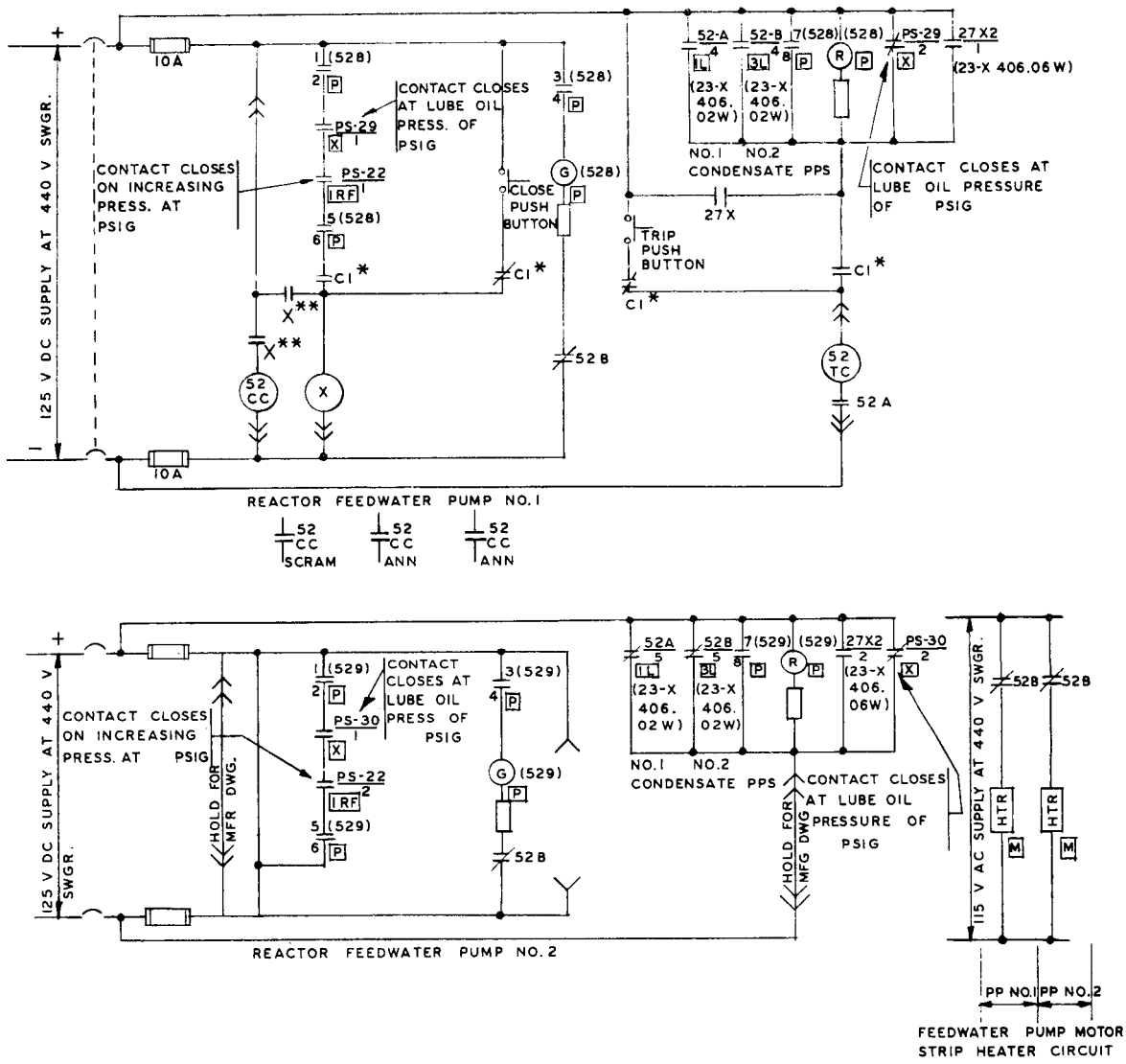

CONTROL SWITCH DEVELOPMENT

CONTACTS	POSITIONS				
	START	CENTER AFTER START	CENTER AFTER STOP	STOP	L.O. ON STOP
1 – 2	X	X	X	X	
3 – 4	X	X	X	X	
5 – 6	X				
7 – 8				X	X
9 – 10		X	X		
11 – 12	X	X			



NAME PLATE FRONT VIEW

SPRING RETURN TO "CENTER" POSITION FOR L.O. TURN TO "STOP" AND PULL OUT

LEGEND

* – CI CELL SWITCH SHOWN WITH BREAKER IN TEST OR WITHDRAWN POSITION

** – CLOSING MECHANISM MECHANICALLY TRIPS "X" CONTACT FREE OF "X" COIL INTERUPTING CLOSING CIRCUITS

[P] – MAIN PANEL LOCATION

[L] – LOAD CENTER LOCATION

[X] – PIPE LOCATION

[IRF] – REACTOR FEEDWATER INSTRUMENT RACK

Ref. Dwg. J&M 40-E-12 Rev. 2

Fig. 507-1 Schematic wiring diagram for the reactor feedwater pumps.

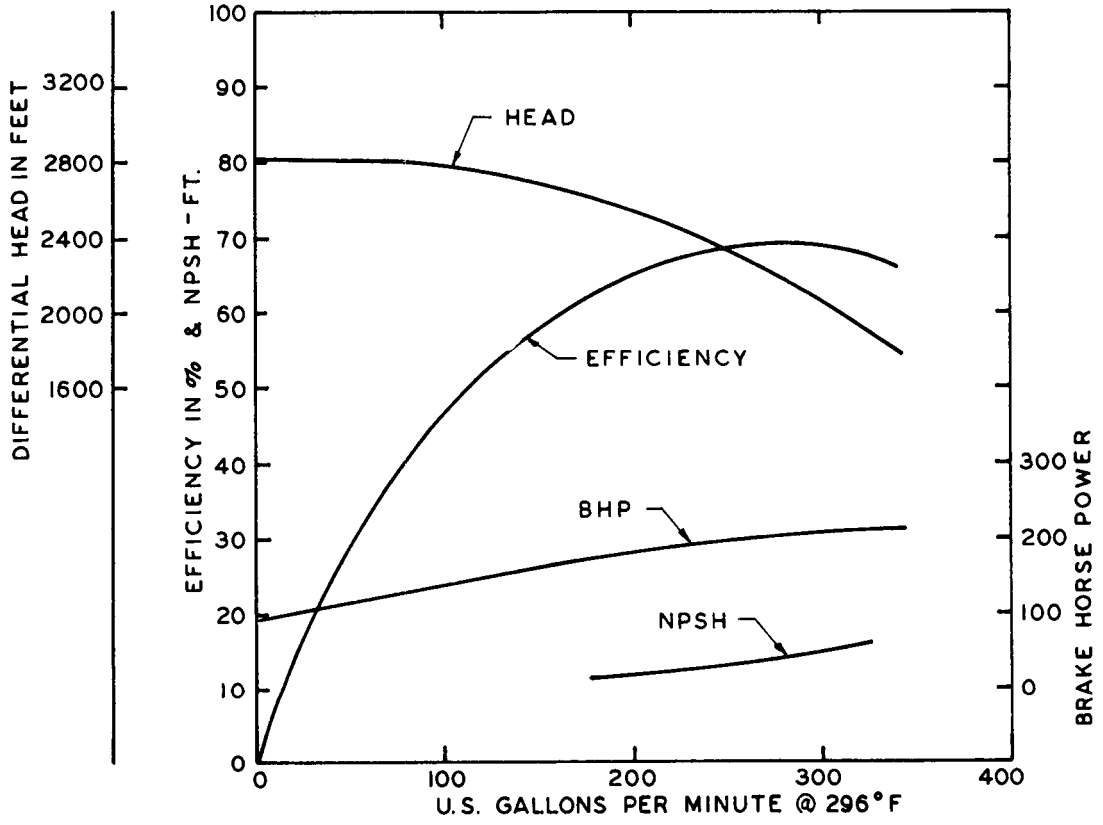

Ref. Dwg. Pacific Pumps, Inc. Curve No. 22370-B

Fig. 507-2 Performance curves for the reactor feedwater pumps.

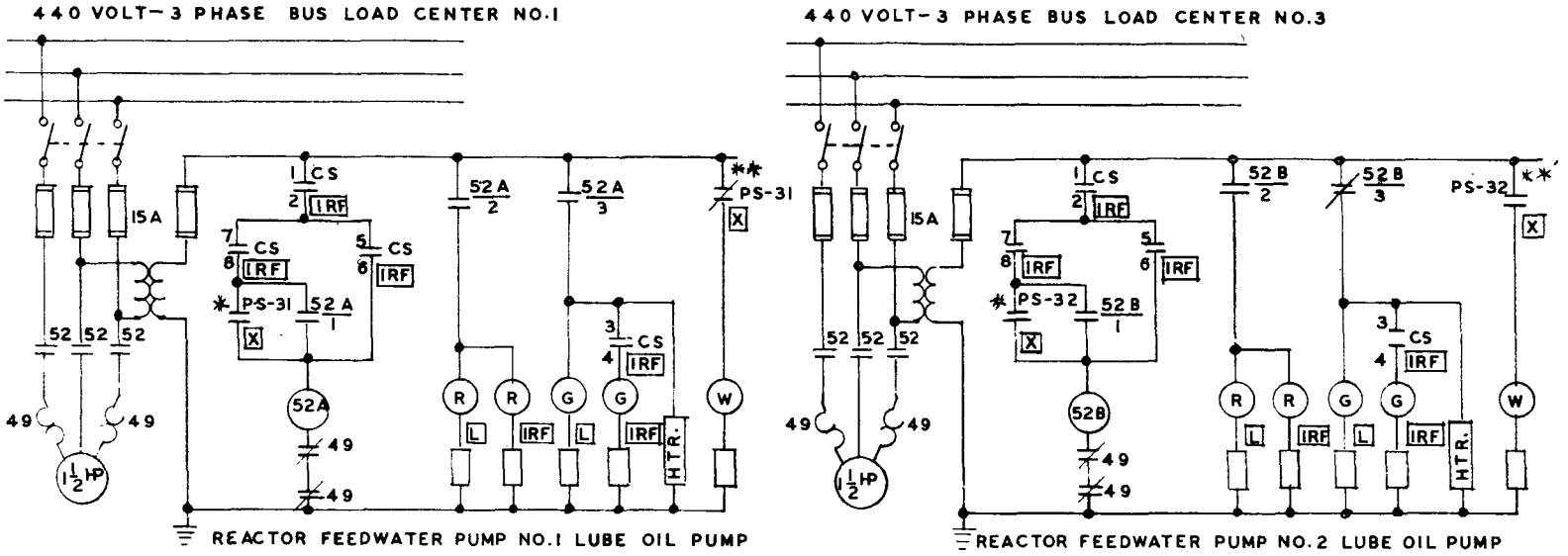

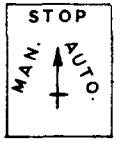

LUBE OIL PUMPS 1 & 2
SWITCH DEVELOPMENT

CONTACTS	POSITIONS			
	AUTO	STOP	L.O. ON STOP	MAN.
1—2	X	X		X
3—4	X	X		X
5—6				X
7—8	X			

NON-SPRING RETURN
FOR L.O. TURN TO STOP
AND PULL OUT.
"X" INDICATES CONTACT CLOSED.

LEGEND

CS — PUMP MOTOR CONTROL SWITCH
52A — PUMP NO.1 MOTOR STARTER
52B — PUMP NO.2 MOTOR STARTER
49 — THERMAL OVERLOAD
PS — PRESSURE SWITCH
[P] — MAIN CONTROL PANEL LOCATION
[L] — LOAD CENTER LOCATION
[IRF] — REACTOR FEED WATER INSTRUMENT RACK
X — PIPE LOCATION
* — CONTACT CLOSES ON LUBE OIL PRESSURE < 9 PSI
** — CONTACT CLOSES AT NORMAL LUBE OIL PRESS

Ref. Dwg. J&M 40-E-18 Rev. 1

Fig. 507-3 Electrical circuitry for reactor feedwater pump auxiliary oil pump.

508. FEEDWATER AND REACTOR WATER LEVEL REGULATOR SYSTEM

The steam-feedwater cycle, as shown in Fig. 505-1 is similar to that for a conventional power plant of the same size. Neglecting losses of steam or water under steady-state conditions, the feedwater regulator makes the feedwater flow equal to steam flow and the ratio of the main condenser hotwell water level to reactor vessel water level remains constant. If there is a mismatch in the feedwater flow with respect to the steam flow a change in both the hotwell and vessel water levels will occur.

In addition the reactor power is partially dependent on and varies with feedwater flow and temperature. Reactivity increases with an increase in feedwater flow or a decrease feedwater temperature; therefore, the feedwater control system is designed to prevent fast changes in feedwater flow. Reactor power changes will also cause changes in the reactor-vessel water level. In order to minimize reactor water level changes, the system is designed so that response to changes in steam flow is delayed to partially compensate for the change in water level during a load change. To accomplish this the feedwater flow is maintained constant for a period of time after a steam flow change and then automatically resets to match feedwater flow to steam flow and thus maintain the reactor water level within preset limits. Delayed actuation of the control valve due to steam flow increase would normally cause a decrease in the reactor water level; however, this decrease is compensated by the water level "swell" due to the increased steam formation. The opposite occurs on a decrease in steam generation.

The feedwater regulator system uses a three-element control system similar to that used in conventional plants. The system receives three input signals representing steam flow, feedwater flow, and reactor water level position. These signals control the feedwater control valve such that feedwater flow is equal to steam flow; if reactor water level is not within preset limits a signal from the reactor water level transmitter will transiently override the feedwater-steam flow signals to provide make-up water from the hotwell as required. A Yarway liquid level indicator and transmitter is mounted on a 4-in. water column 31 ft, 9 in. long, as indicated in Fig. 505-1. The Yarway level transmitter is a differential pressure transmitter which compares the reactor-vessel pressure (Ps) with the reactor pressure plus the head of water (Ps + ΔH); the output of the transmitter, the operating water level (ΔH) is indicated and recorded. Two, 0- to 20-ft level indicators are provided, one located in the control room and one located in the pillbox, to give a coarse measurement accurate within $\pm$ 6 in. The operating level range of $\pm$ 24 in. from the normal operating level (el. 54 ft, 8 in.), is recorded on a recorder in the control room.

The control valve is a P-K Paul Ball valve designed to operate at 1600 psig, 354°F, and 185,000 lb/hr maximum flow. The valve is fabricated

with a cast steel body and stellite and stainless steel trim. A transducer measures the differential pressure (ΔPs) across a flow nozzle mounted in the main steam line, and transmits a signal — which is proportional to the square of the steam volumetric flow — to be multiplied by the steam pressure (Ps) in a servo multiplier circuit. The output signal of the multiplier (Ps ΔPs) is fed into the measuring circuit on the steam side of a two-pen recorder to record steam flow. The second pen of the two-pen recorder records feedwater flow.

Pre-scram high and low water levels are annunciated on the station annunciator system. Reactor scram signals are initiated when the reactor water level is 12 in. above or below normal operating level as indicated at the sight gage.

During preheating, reactor water level is maintained by manual operation of the 3-in. motor-operated feedwater control bypass valve (MOV-24). Figure 508-1 is the electrical control circuit diagram for the feedwater control bypass valve, MOV-24.

The feedwater supply system can be isolated from the reactor by closing the 4-in. motor-operated feedwater stop valve (MOV-2). Figure 508-2 is the electrical control circuit diagram for the feedwater stop valve, MOV-2. The feedwater stop valve position is indicated on the main control panel by red, amber and green indicating light. Should the valve leave its full open position, this condition will be annunciated in the control room.

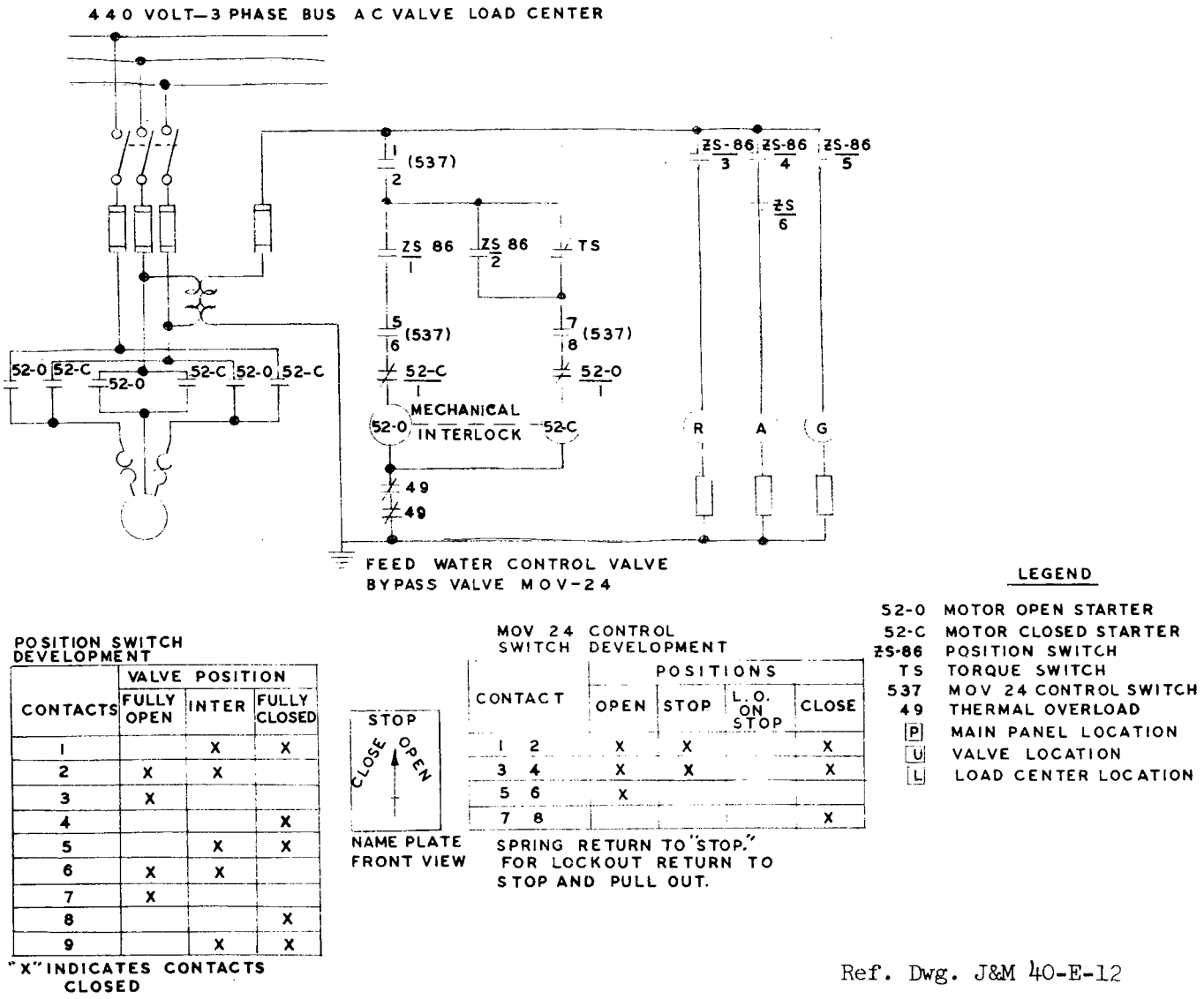

POSITION SWITCH DEVELOPMENT

CONTACTS	VALVE POSITION		
	FULLY OPEN	INTER	FULLY CLOSED
1		X	X
2	X	X	
3	X		
4			X
5		X	X
6	X	X	
7	X		
8			X
9		X	X

"X" INDICATES CONTACTS CLOSED

NAME PLATE FRONT VIEW

MOV 24 CONTROL SWITCH DEVELOPMENT

CONTACT	POSITIONS			
	OPEN	STOP	L.O. ON STOP	CLOSE
1 2	X	X		X
3 4	X	X		X
5 6	X			
7 8				X

SPRING RETURN TO "STOP." FOR LOCKOUT RETURN TO STOP AND PULL OUT.

LEGEND

52-0	MOTOR OPEN STARTER
52-C	MOTOR CLOSED STARTER
ZS-86	POSITION SWITCH
TS	TORQUE SWITCH
537	MOV 24 CONTROL SWITCH
49	THERMAL OVERLOAD
[P]	MAIN PANEL LOCATION
[U]	VALVE LOCATION
[L]	LOAD CENTER LOCATION

Ref. Dwg. J&M 40-E-12

Fig. 508-1 Circuit diagram of electrical control of the feedwater control bypass valve (MOV-24).

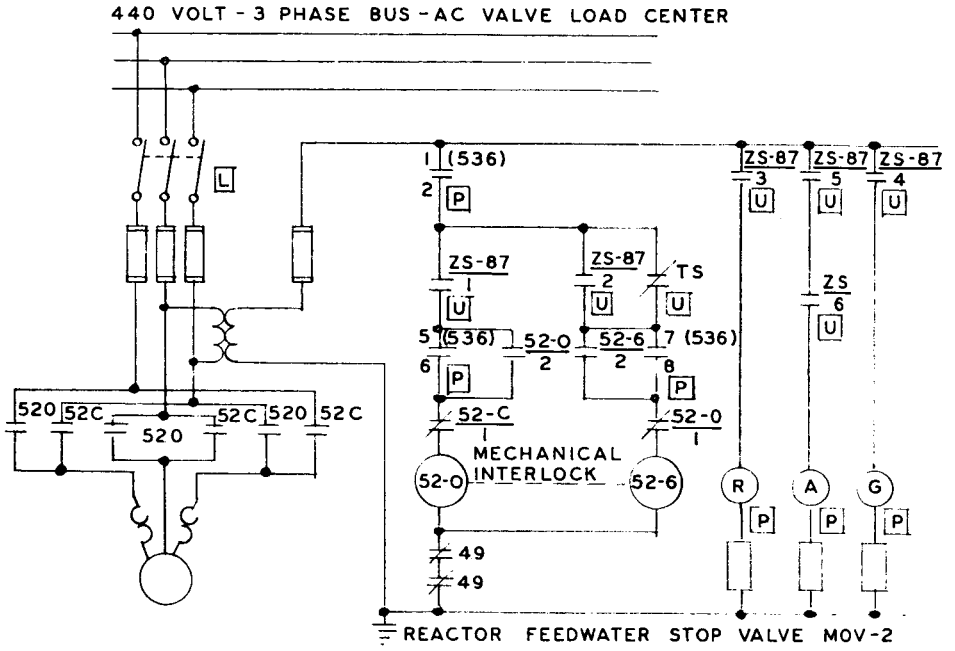

LEGEND

52-D — MOTOR OPEN STARTER
52-C — MOTOR CLOSED STARTER
ZS-87 — POSITION SWITCH
TS — TORQUE SWITCH
536 — MOV-2 CONTROL SWITCH
49 — THERMAL OVERLOAD
[P] — MAIN PANEL LOCATION
[U] — VALVE LOCATION
[L] — LOAD CENTER LOCATION

POSITION SWITCH DEVELOPMENT

CONTACTS	VALVE POSITION		
	FULLY OPEN	INTER	FULLY CLOSED
1		X	X
2	X	X	
3	X		
4			X
5		X	X
6	X	X	
7		X	X
8		X	X
9		X	X

X INDICATES CONTACT CLOSED

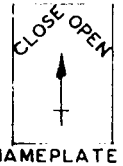

NAMEPLATE FRONT VIEW

MOV-2 CONTROL SWITCH DEVELOPMENT

CONTACT	POSITIONS			
	OPEN	CENTER	LO ON CENTER	CLOSE
1 - 2	X	X		X
3 - 4	X	X		X
5 - 6	X			
7 - 8				X

SPRING RETURN TO CENTER FOR LOCKOUT TURN TO CENTER AND PULL OUT

Ref. Dwg. J&M 40-E-12 Rev. 3

Fig. 508-2 Circuit diagram of electrical control of the feedwater stop valve (MOV-2).

509. AUXILIARY COOLING WATER SYSTEM

The components of the auxiliary cooling water system which absorbs the heat transferred to the miscellaneous heat exchangers and auxiliaries in the plant are shown in Fig. 509-1. The system consists of the miscellaneous equipment to be cooled, the cooling water pumps for forcing the water through the units, and the outside heat sink, the cooling tower, where the hot water is cooled and recirculated by the pumps. Although sea water is available for cooling purposes, fresh water is used to avoid the stress corrosion problem in the stainless-steel heat exchangers and to minimize the need for frequent cleaning and maintenance. To minimize the fouling of the heat exchangers the cooling tower water is chemically treated to control the alkalinity concentration and pH and the makeup water is sodium-zeolite pretreated to remove the scale forming calcium and magnesium salts.

The twin set of auxiliary cooling water pumps located at basement floor level (see Fig. 906-5) take their suction from the basin of the cooling tower, described in section 1101. The 10-in. suction line between the two contains an air operated gate valve for building emergency isolation purposes. This valve and the companion one in the return line back to the tower automatically close on either loss of air pressure or power to the pilot solenoid valve. Normally only one of the two pumps is required to deliver the required cooling water flow. The other unit serves as a standby and automatically starts-up if the discharge header pressure is low. Either pump can be selected as the main unit and the other as the standby. Due to the importance of continued cooling, especially after the reactor is shutdown and on loss of general station power, the cooling water pump, and cooling tower fan power supply is Motor Control Center No. 2 which is backed up by the emergency generator. The elementary wiring diagram for the cooling water pumps is shown in Fig. 509-2; Fig. 1101-6 illustrates the control circuit for the cooling tower fan.

The cooling water pumps (Worthington Model 3CNE-72) are horizontal centrifugal, motor driven type with cast iron casing and bronze impeller. The rated capacity is 700 gpm at 180-ft total dynamic head. Each pump is driven by a 50-hp, 3500-rpm, 440-volt, 3-phase, 60-cycle, total enclosed motor.

The 90°F nominal cooling water is distributed throughout the plant through a supply header system connected to the pump discharge manifold. The header supplying water to the turbine generator equipment varies in size from 6 in. to 4 in. and the header for all of the other plant cooling water-supplied components varies from 5 in. to 2-1/2 in. The return water distribution header system is run parallel to the supply header and the same size. Smaller size branch supply and return feeders from the equipment are connected to the respective headers.

The equipment supplied with cooling water and the required quantities are listed in Table 509-1.

Table 509-1 AUXILIARY EQUIPMENT COOLING WATER REQUIREMENTS

Quantity	Equipment	gpm Each	gpm Total
1	Control Air Compressor	2	2
1	Station Service Air Compressor	4	4
4	Generator Hydrogen Coolers	35	140
2	Turbine Lube Oil Coolers	155	155
2	Air Conditioner Units	60	120
1	Fuel Storage Pool Cooler	85	85
1	Reactor Purification Secondary Cooler	48 170	Purification Shutdown
2	Reactor Purification Pumps	2	4
2	Reactor Water Circulating Pumps (Backplate)	5	10
2	Reactor Water Circulating Pumps (Seal injection heat exchanger)	5	10
2	Reactor Water Circulating Pumps (Oil coolers)	2-1/2	5
1	Reactor Shield Cooler	45	45
2	Reactor Feedwater Pump (Glands)	20	40
2	Reactor Feedwater Pump (Oil coolers)	10	20
1	Liquid Waste Evaporator Condenser	12	12
1	Fuel Coffin	10	10
	Sampling Coolers	5	-

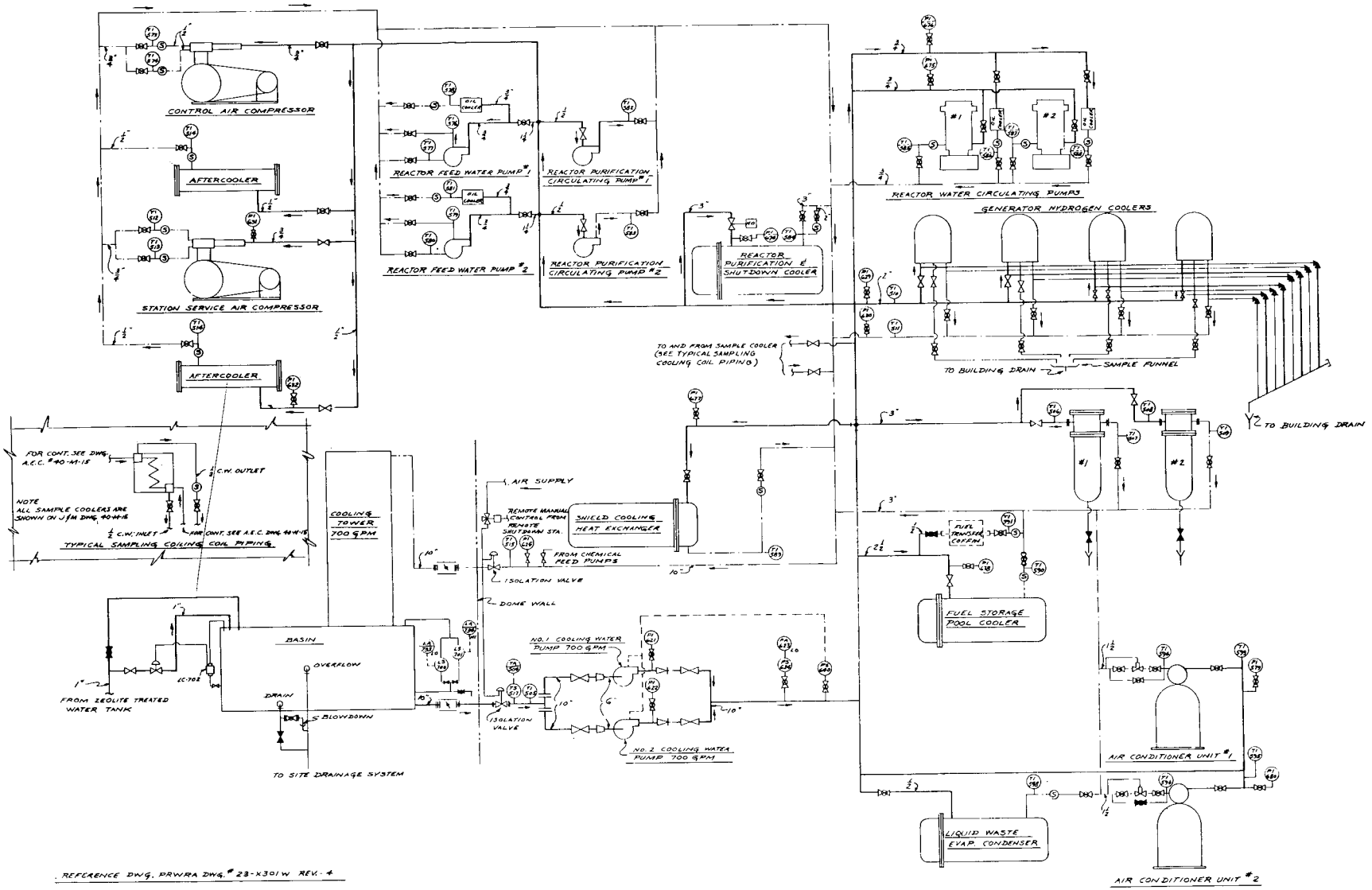

Fig. 509-1 Schematic flow diagram of auxiliary cooling water system.

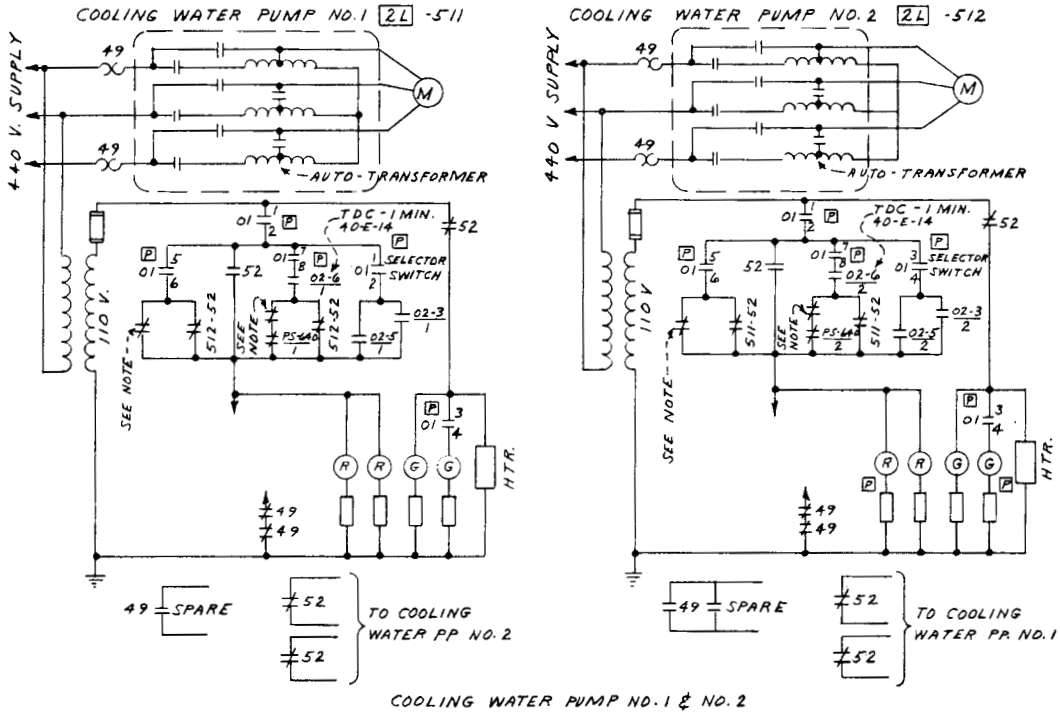

NOTE:
CONTACTS ARE CLOSED WHEN DIESEL GENERATOR TRANSFER SWITCH IS IN NORMAL OPERATING POSITION.

COOLING WATER PUMP NO. 1 & NO. 2
CONTROL SWITCH DEVELOPMENT

CONTACTS HANDLE END	POSITIONS				
	START	NORMAL AFTER START	NORMAL AFTER STOP	STOP	L.O. ON STOP
1 - 2	X	X	X		
3 - 4	X	X	X	X	
5 - 6	X				
7 - 8			X		

X DENOTES CONTACT CLOSED - SPRING RETURN TO NORMAL. TO L.O. TURN TO STOP & PULL OUT

REFERENCE DWG. FRWRA 23-X 406.01 W REV. 2

Fig. 509-2 Schematic electric control diagram for auxiliary cooling water pumps.

510. MAKE-UP WATER SYSTEM

Make-up water is obtained by demineralization of zeolite-softened water. The constituents normally present in the softened water are listed in Table 510-1. (Make-up water system diagrams are shown in Figs. 510-1, 510-2, 510-3, 510-4, and 510-5.) The softened water to be purified flows through a bed of cation exchange resin, a degassifier column, a bed of anion resin, and finally through a mixed resin bed. The purified water is then stored in the 6400-gallon demineralized water storage tank mounted inside the building at platform elevation 70 ft, 0 in. The make-up water treatment system is designed for a normal purification rate of 25 gallon/min with capability for operation for short periods at flow rates up to 50 gallon/min. Twin cation and twin anion units are provided, with each unit having enough net capacity to process 12,000 gallons of water in 8 hours between regenerations. The cation units have a gross processing capacity of 13,680 gallons each between regenerations, since part of their output is used up in providing backwash and rinse water for the anion beds at the end of each cycle. The degassifier is designed for a maximum continuous flow rate of 50 gallon/min. The single mixed-bed polishing unit is capable of processing 100,000 gallons of water between regenerations when operated at 25 gallon/min.

The effluent from the make-up purification system is guaranteed to contain less than 2 ppm of total electrolytes expressed as $CaCO_3$, and will contain 0.05 ppm or less of silica expressed as SiO_2. The chloride ion content of the purified water will not exceed 0.01 ppm. The guaranteed operating exchange capacities of the various units are as follows: cation bed resin, 29.2 kgr/cu ft; anion bed resin, 10.1 kgr/cu ft; mixed-bed cation resin, 20 kgr/cu ft; and mixed-bed anion resin, 10 kgr/cu ft.

The two cation exchangers are typical 14 cu ft mono-bed units with 30-in. OD x 72-in. straight shell tanks made of steel lined with 3/16-in. thick rubber. The tanks are designed for a working pressure of 100 psi in accordance with ASME code requirements and are equipped with all connections necessary for in-place regeneration of the resin beds. Internal distributors for water and regenerants are of stainless steel. The beds are supported by anthrafilt, with underdrain piping and hub of polyvinyl chloride.

The degassifier which removes CO_2 from the cation column effluent is a rubber-lined steel column 24-in. OD by 10-ft, 6-in. high, filled to a depth of 8 ft with 25 cu ft of 1-in. Raschig rings. It is mounted on top of a 250-gallon rubber-lined clear well 48 in. ID by 36 in. high. The clear well is equipped with a bubbler-type liquid level control which regulates the flow of water to the degassifier to maintain a constant level in the clear well tank. An air blower capable of

Table 510-1 TYPICAL COMPOSITION OF ZEOLITE WATER ENTERING MAKE-UP WATER TREATMENT SYSTEM

Cations, ppm as $CaCO_3$	
Calcium	3
Magnesium	1
Sodium, Potassium	496
Anions, ppm as $CaCO_3$	
Chlorides	57
Sulfates, Nitrates, Phosphates	113
Methyl Orange Alkalinity	330
Total Hardness, ppm as $CaCO_3$	4
Silica, ppm as SiO_2	25
pH	7
Theoretic Mineral Acid, ppm	17
Conductivity (micromhos)	780

delivering 260 cfm against a back pressure of 7 in. of water is mounted on top of the clear well. This blower is driven by a 1-1/2-hp, 440-volt motor and is used to force air up through the packed column to remove the CO_2 from the water falling through the packed bed.

The clear well serves as a sump for the two transfer pumps which force water through the anion columns and the polishing bed and into the elevated storage tank. The two pumps are single-stage, centrifugal, Worthington Type 1-CNG-52 with casings of Worthite alloy. They are driven by 3-hp motors, and develop 128 ft of head at the rated flow of 25 gallon/min. A pressure-sensitive relief valve is installed in the output line from these pumps to allow water to recirculate to the pump suction and thus prevent overheating in case the normal flow of water through the pumps is cut off. The anion exchangers are similar to the cation exchangers except that the tanks are one foot longer and contain 14 cu ft beds of IRA-402 resin.

The polishing bed is a 30-in. OD x 9-ft, 0 in. straight side of shell mixed-bed demineralizer containing 11.5 cu ft of IR-120 and 10 cu ft of IRA-402 resin. The demineralizer tank is lined with 3/16 in. of rubber and is designed to ASME code for 100 psi internal pressure with walls of 3/16-in. steel Type A-285 Gr C. This unit is completely equipped with all connections necessary for in-place regeneration of the mixed-resin bed.

Instrumentation and controls for the makeup water system are mounted on a local control panel near the water treatment equipment. Warning signals responding to total volume throughout are provided to indicate need for regeneration. Supplementary warning devices based on effluent conductivity and effluent pH are also included for additional protection. The regeneration cycle is completely automatic for all beds once the manual regeneration control has been set.

The control panel includes the following instruments: one effluent conductivity meter with alarm for each cation and anion unit; a conductivity meter for measuring the strength of acid used for regeneration and one for caustic; a pH meter with low pH alarm contacts for the anion unit effluent; an indicating, recording and totalizing flow meter for measuring the quantity of water delivered to the demineralized water storage tank.

Manual controls are available for all valves and motors if the operator wishes to use them. Manually operated three-way valves are provided in series with all solenoid valves to permit manual operation of the controls if control power fails.

Level control switches are provided to warn the operator if the clear-well level becomes low and to stop the pumps connected to the clear well on low water level.

Interlocks are provided to prevent the regeneration of more than one cation or anion unit at a time.

The treated-water outlet valves for the cation unit are interlocked to close automatically when the following conditions occur: 1) high clear-well level, 2) regeneration underway, 3) total water volume throughput limit exceeded, 4) effluent conductivity high.

The anion unit outlet valve closing interlocks are: 1) effluent pH high, 2) total volume throughput limit exceeded, 3) regeneration underway, 4) effluent conductivity high.

The mixed-bed outlet valve closing interlocks are: 1) effluent conductivity high, 2) total volume throughput limit exceeded, 3) outlet valves on both anion units closed, 4) low clear well level, 5) regeneration underway.

The audible warning alarm is tripped under the following conditions:

1) Effluent conductivity high for any unit.
2) Acid dilution water flow low.
3) Caustic dilution water flow low.
4) Dilute acid conductivity high.
5) Dilute caustic conductivity high.
6) Clear well level high.
7) Clear well level low.
8) Anion effluent pH low or high.
9) Total volume throughput limit exceeded for any unit.
10) High conductivity from any condensate demineralizer.
11) High pressure drop across condensate purification system.
12) Completion of automatic regeneration cycle for condensate equipment.

Signal lights are provided on the local panel to indicate which of the above conditions has tripped the alarm. A trip relay in parallel with the audible alarm is connected to a single annunciator on the main reactor control panel to notify the operators when the water treatment system needs attention.

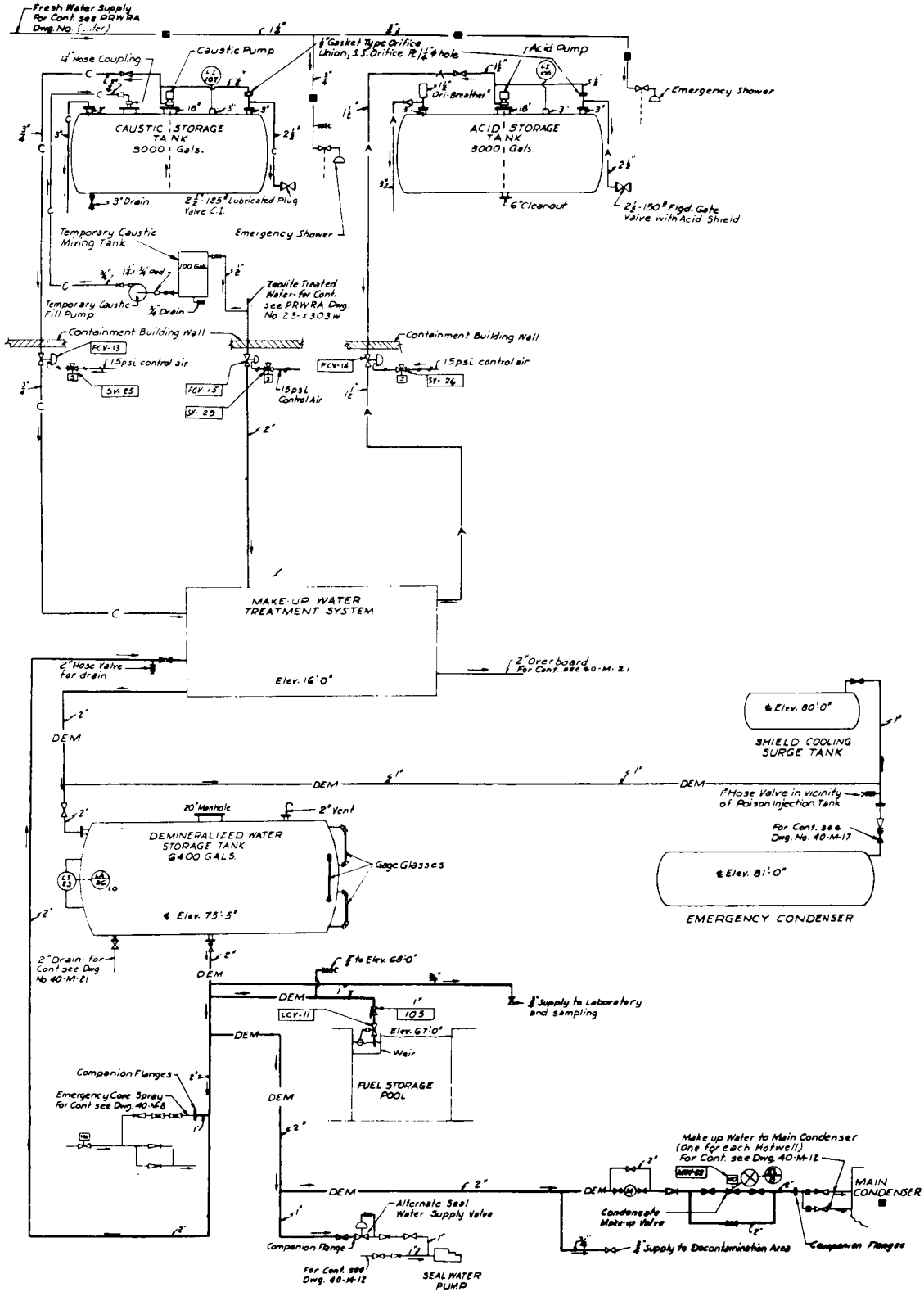

WATER PURIFICATION REGENERATION PIPING

Ref. Dwg. J&M 40-M-20 Rev. 4

Fig. 510-1 Flow diagram of demineralized make-up water system.

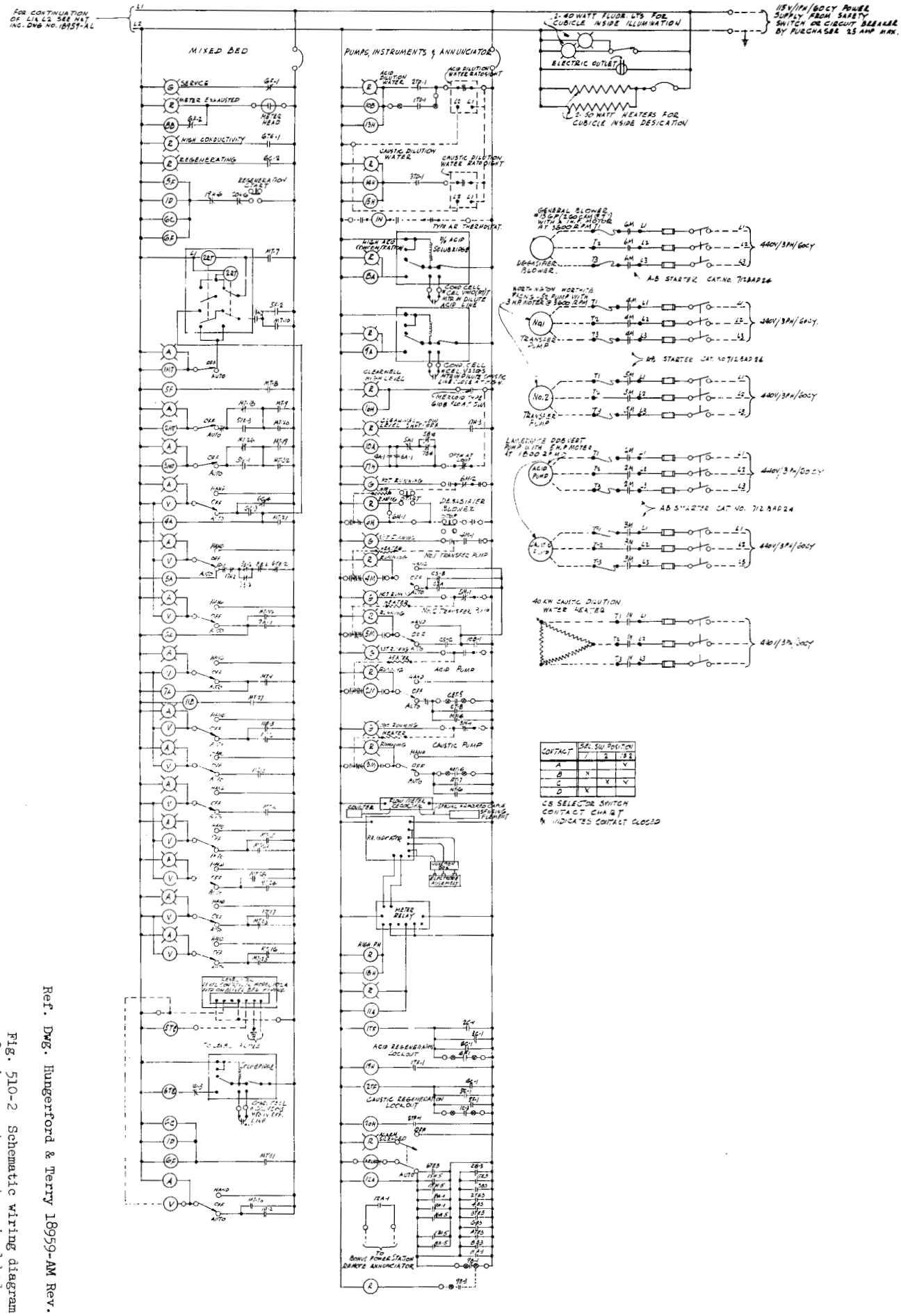

Ref. Dwg. Hungerford & Terry 18959-AM Rev. 5

Fig. 510-2 Schematic wiring diagram of make-up water system mixed-bed regeneration and annunciation.

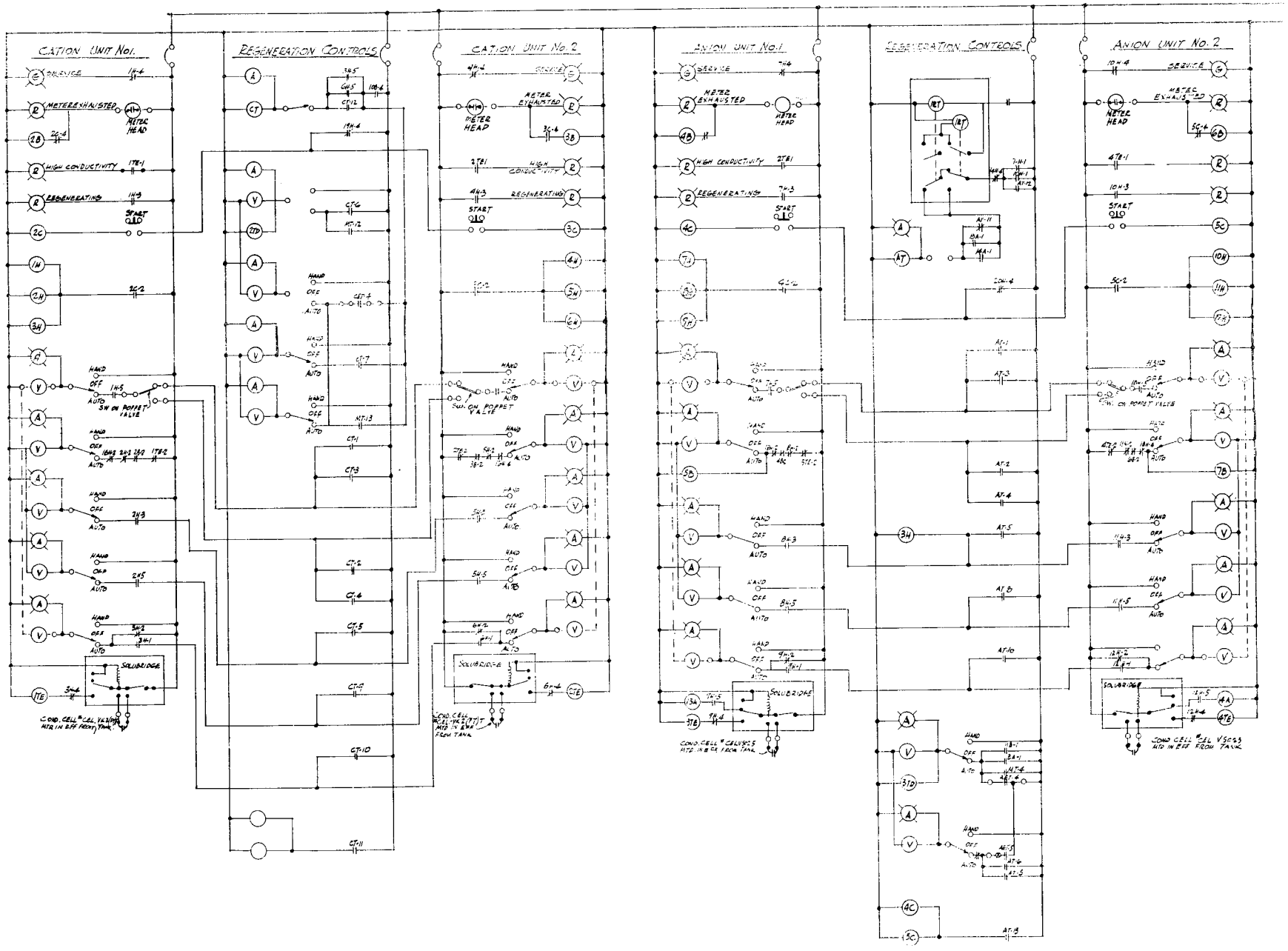

Ref. Dwg. Hunderford & Terry 18959-AL Rev. 1

Fig. 510-3 Schematic wiring diagram of make-up water treatment system cation and anion regeneration.

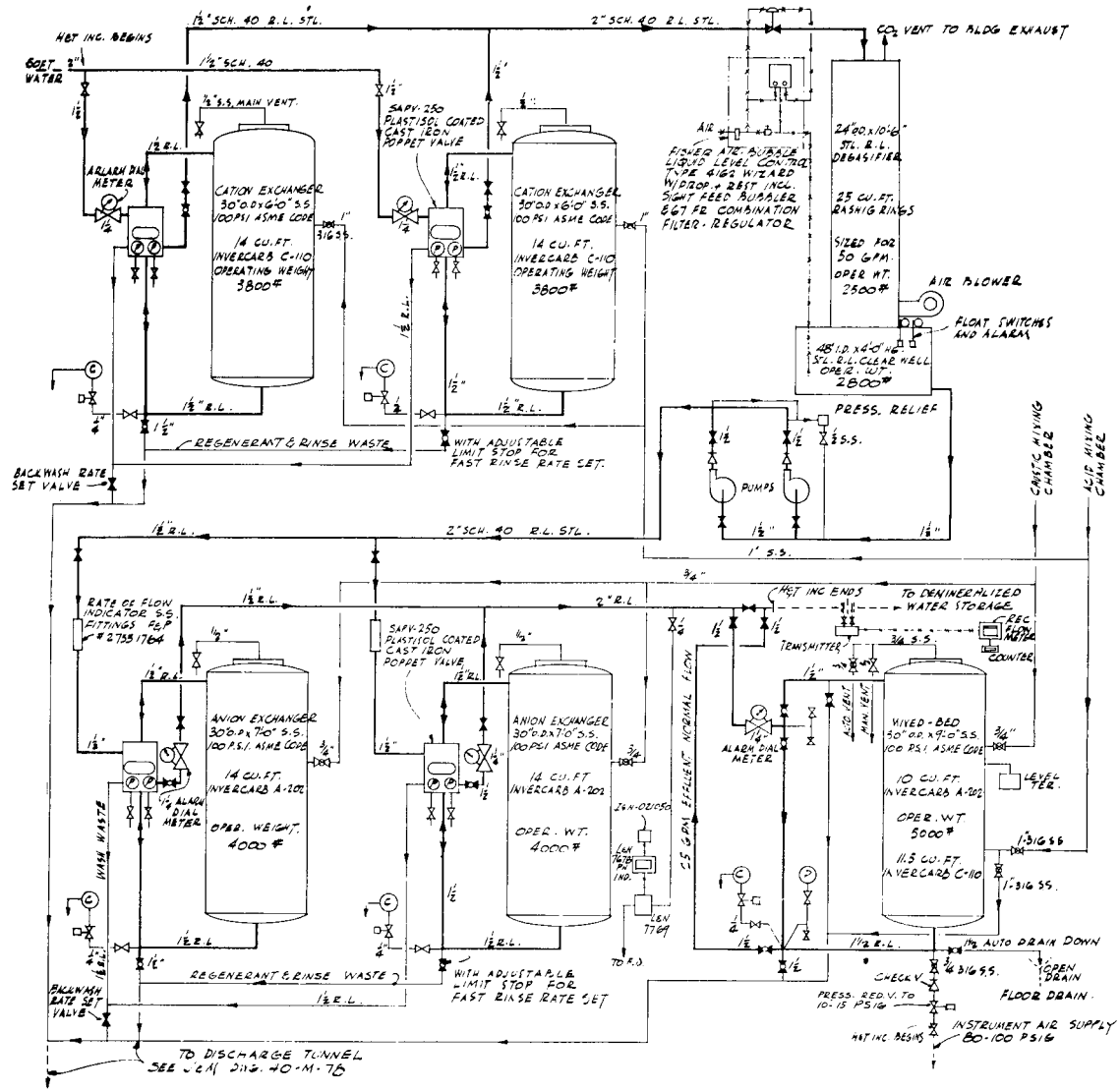

Ref. Dwg. Hungerford & Terry 18959 Rev. 4

Fig. 510-4 Schematic flow diagram of make-up water treatment system.

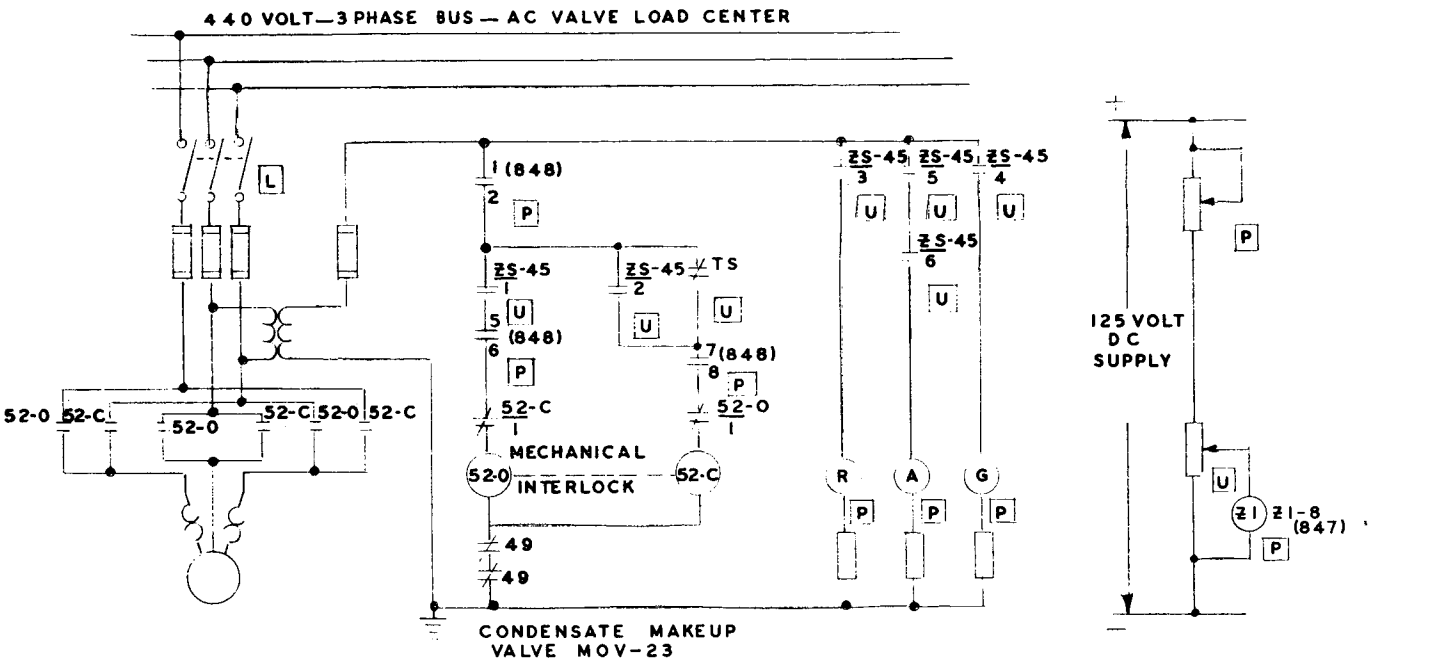

POSITION SWITCH DEVELOPMENT

CONTACTS	VALVE POSITION		
	FULLY OPEN	INTER	FULLY CLOSED
1		X	X
2	X	X	
3	X		
4			X
5		X	X
6	X	X	
7	X		
8			X
9		X	X

"X" INDICATES CONTACTS CLOSED

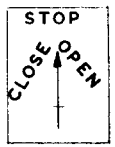

NAME PLATE FRONT VIEW

MOV 23 CONTROL SWITCH DEVELOPMENT

CONTACT	POSITIONS		
	OPEN	STOP	CLOSE
1 2			
3 4			
5 6			
7 8			

SPRING RETURN TO "STOP" FOR LOCKOUT TURN TO STOP AND PULL OUT.

LEGEND

52 O — MOTOR OPEN STARTER
52 C — MOTOR CLOSE STARTER
ZS-45 — POSITION SWITCH
TS — TORQUE SWITCH
848 — MOV 23 MOTOR CONTROL SWITCH
49 — THERMAL OVERLOAD
P — MAIN PANEL LOCATION
U — VALVE LOCATION
L — LOAD CENTER LOCATION
ZI-8 — POSITION INDICATOR (847)

Ref. Dwg. J&M 40-E-14 Rev. 4

Fig. 510-5 Schematic electrical control diagram for condensate make-up valve (MOV-23).

511. COMPRESSED AIR SUPPLY

A. Control Air

The control air system supplies compressed moisture-free air at 90 psig for the operation of the various pneumatic-actuated valves, instruments, and control devices distributed throughout the plant. The control air system consists of the compressor, after-cooler, air receiver, air filters, dryer, and ring distributor header. The schematic of the piping for the control air supply system is shown in Fig. 511-1. Figure 511-2 shows diagrammatically the electrical control circuit for the compressor unit. For plant operating continuity, the air compressor power source is motor control center No. 2, which is backed up on loss of voltage by the diesel generator set. In addition, the service air source is connected to the control air supply, and automatically takes over the delivery of compressed air to the pneumatic devices if the control air header pressure upstream of the filters and dryers drops below 80 psig.

The compressor (Ingersoll Rand Co., Type 7 x 5 ESV-1-NL-2) is a single-stage, double-acting, vertical, V-belt motor-driven unit with a rated air delivery capacity of 100 scfm at a discharge pressure of 100 psig. The drive motor is a 25-hp, 1800-rpm, 440-volt, 3-phase, 60-cycle, drip-proof, squirrel-cage induction motor; the corresponding speed of the compressor shaft is 675 rpm. The water-cooled cylinder is the non-lubricated type; the piston rings are graphitic carbon, and the piston-rod floating-type packing is of carbon composition. So that no part of the piston rod entering the forced-lubricated crankcase can enter the cylinder stuffing box, the compressor includes a distance piece and an oil baffle collar to prevent oil travel along the rod. An integral-gear-type pump driven from the crankshaft supplies filtered lubricating oil from the built-in sump tank to the main bearings, to the crankpin bushings, to the crosshead and to the crosshead pin bushing. The unit is protected against loss of oil pressure by a pressure switch which automatically stops the unit on loss of oil pressure. The pressure switch is set to close when the pressure reaches 8 psi and to open if the pressure falls below 5 psig. The low-pressure cut-out switch is by-passed during start-up by a time delay relay which allows time for the compressor to reach rated speed and thus develop the required oil pressure.

The unit is started locally at the selector switch on the Dual Control regulator panel located near the compressor; indication that the compressor is functioning properly and delivering the required 90 psig pressure is given in the control room on a pressure indicator and, if the pressure is reduced below 75 psig, the operating staff is warned about this condition by the operation of the annunciator.

The compressor may be operated either under "Manual" control or "Automatic" control. With the selector switch set at the manual position the compressor runs continuously and the compressor is unloaded and reloaded in accordance with the pressure cut-in and cut-out settings on the "Manual" pressure switch integral with the regulator cabinet. When the selector switch is set in the "Automatic" position the compressor starts and stops automatically to maintain the receiver pressure within the set pressure range of the "Automatic" pressure switch. An adjustable mechanical time delay which permits the compressor to reach operating speed while unloaded is a feature of the compressor regulator.

The cooling water to the compressor jacket and piston-rod seal casing is supplied automatically whenever the compressor is running; a two-way 1/2-in. solenoid valve, mounted in the supply piping feeding these cooling regions, automatically opens when the compressor is started and automatically closes when the compressor is stopped. The cooling water flow rate required is approximately 1.3 gal/min.

The compressed air discharged by the compressor is cooled and the moisture removed by a horizontally mounted, counter-flow, water-cooled ASME-code-designed aftercooler with integral impingement-type moisture separator (Ingersoll Rand Model 7PL-12). The flanged shell of the assembly and the moisture separator tank are fabricated of steel, the fixed and floating end tube sheets of brass, and the rolled tubes of copper. Telltale holes are provided in the shell at the packed tube sheet end to indicate any leakage of air or water and to prevent leakage of air into the water space or water into the air space. The compressed air flows through the tubes and the 1.5-gal/min cooling water through the baffled shell side. Any moisture collected in the separator is automatically discharged to Sump No. 2 by the opening of the inverted bucket-type moisture trap piped to the bottom of the separator.

The compressed air after delivery to the 34 cu ft, vertical 30-in.-dia., ASME-code-designed air receiver (Ingersoll Rand Type R-5, 30 x 7), is prefiltered prior to entry into the Air Dryer Unit.

The air dryer (Kemp Model 75-E Oriad), is a dual-tower unit which is completely automatic in operation. Each tower contains 85 lb of silica jel. The unit operates on a 16-hr cycle (8 hr adsorption and 8 hr reactivation), and the reactivation cycle consists of a 4-hr heating and a 4-hr cooling period. During the reactivation cycle, a flow of 3.5 scfm of dry air is purged through the bed being reactivated to remove entrained moisture. The unit is designed to give a final air effluent dewpoint of -40°F; the moisture is measured on a color-type moisture indicator mounted in the purge air line. Figure 511-3 shows schematically the flow through the towers during reactivation and drying, and Fig. 511-4 shows the electric circuitry which automatically carries out the transfer functions.

The dryer will be automatically by-passed if the pressure drop through the bed becomes excessive; a self-powered air-operated valve

opens if the air pressure at the dryer outlet decreases below 70 psig. To protect against particles of the dessicant from being carried into the control air system, dual filters, capable of removing 10-micron particles, are downstream of the dryer unit.

All the components of the control air supply system are located on floor level 16 ft, 0 in. and on the west side of the building. The piping, valves, flanges, and fittings integrating the system comply in general with class 125 (J&M Dwg. 40-M-63.)

This piping uses ASTM A-53 Gr B carbon steel pipe. For 2 in. and smaller sizes, malleable iron fittings and bronze valve bodies are used, while for 2-1/2 in. and larger, steel fittings and cast iron valve bodies are used.

The discharge from the dryer is connected to a 1-1/2-in.-dia. x .072-in.-wall copper tube ring header mounted to the lower supports for the electrical trays which are attached to the inner ring of crane columns. From the ring header, the control air is distributed through copper tubing to the various pneumatic devices which have integral pressure-reducing and filter accessories.

B. Station Air

A compressed air system for general use, such as for condenser tube cleaning, operation of power tools, etc., is installed with service connections located throughout the plant at the different floor levels. This system is used as a stand-by for instrument and valve control in case of failure of the normal control air supply system. Upon failure of the control air compressor a pressure control valve will automatically open to permit the use of the service air for control purposes to maintain continuity of service. Figure 511-5 shows the schematic piping and electric circuity for the air compressor unit.

The station service air system is supplied by an Ingersoll-Rand, Class ESV-1-NL-2 vertical compressor driven by a 40-hp, 1800-rpm, 440-VAC motor and is rated to deliver approximately 160-cfm of free dry air at 100 psig. The compressor is equipped with teflon non-lubricated wearing and piston rings to avoid oil carry-over to the system. It is also equipped with an automatic dual control regulation with timer relay, forced feed lubrication, low oil pressure shutdown switch, automatic water valve, air filter and silencer, oil trap, aftercooler, moisture separator and a receiver tank. The components of this system are similar to those described for the control air system.

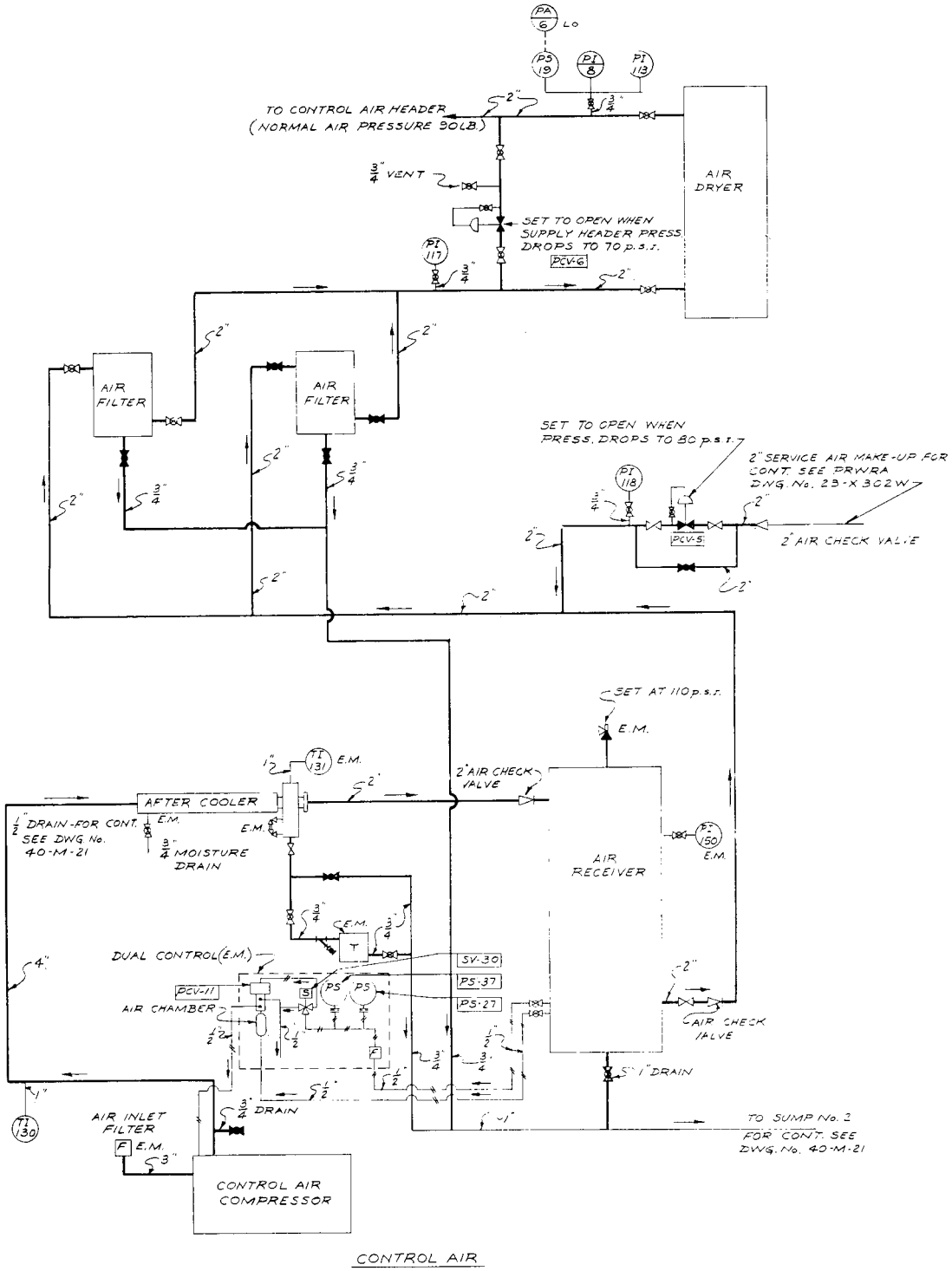

CONTROL AIR

Ref. Dwg. J&M 40-M-11 Rev. 4

Fig. 511-1 Schematic diagram of piping for the control air supply system.

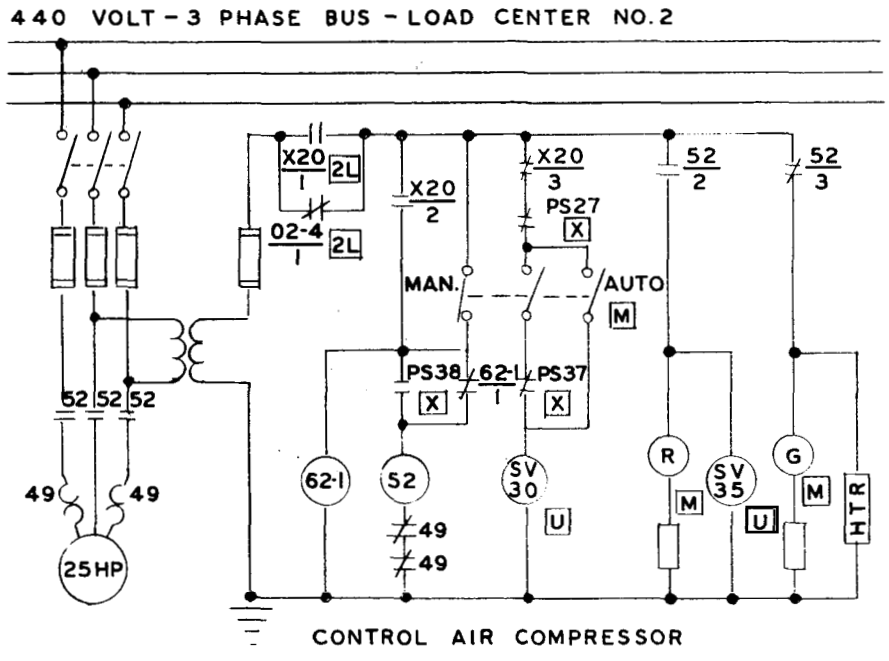

LEGEND

52 — MOTOR STARTER
49 — THERMAL OVERLOAD
X20 — SEQUENTIAL STARTING RELAY
02-4 — EMERGENCY BUS TIME DELAY
62-1 — TIME DELAY RELAY
PS-27 — PRESSURE SWITCH, OPEN 100 PSI, CLOSE 90 PSI
PS-37 — PRESSURE SWITCH, OPEN 100 PSI, CLOSE 90 PSI
PS-38 — LUBE OIL PRESSURE SWITCH
SV30 — COMPRESSOR UNLOADER SOLENOID VALVE
SV35 — SOLENOID WATER VALVE
[2L] — LOAD CENTER NO.2 LOCATION
[M] — MOTOR LOCATION
[U] — VALVE LOCATION
[X] — PIPE LOCATION

Ref. Dwg. J&M 40-E-14 Rev. 4

Fig. 511-2 Schematic electrical control diagram for control air compressor.

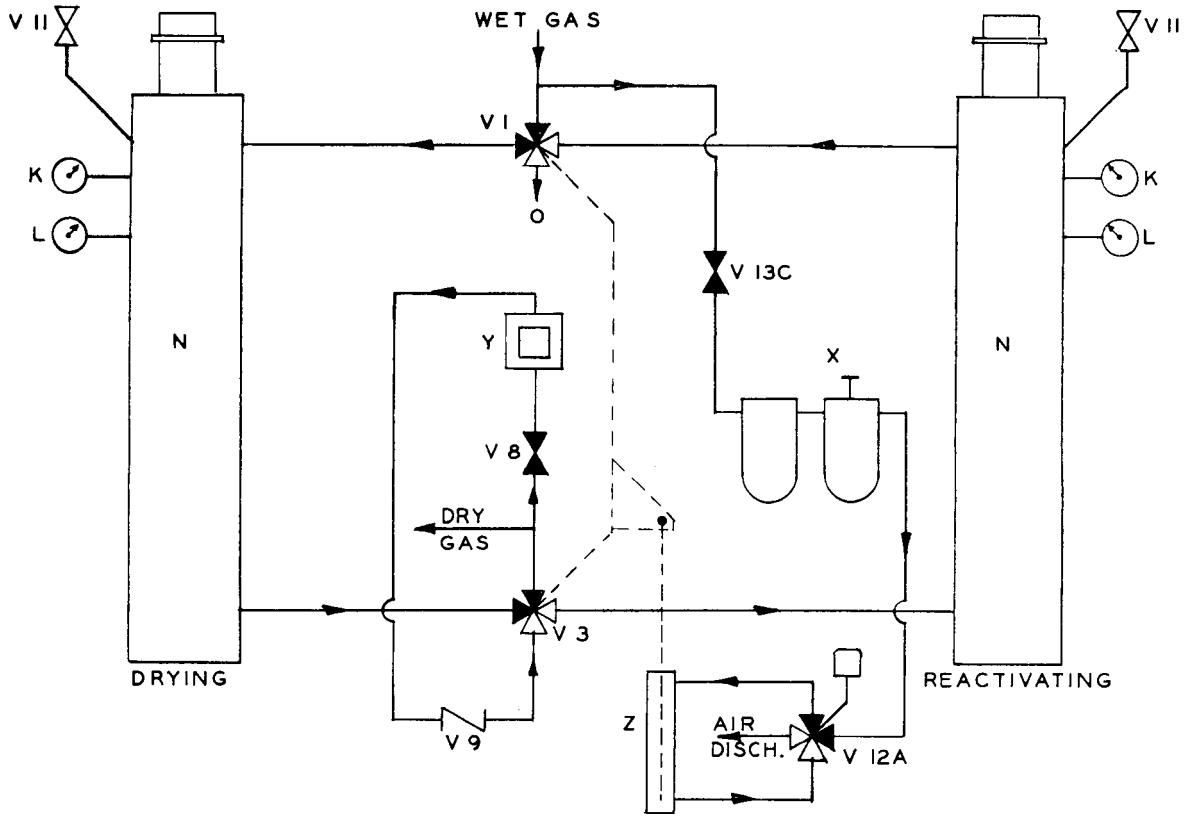

G - CONTROL PANEL
K - PRESSURE GAUGE
L - TEMPERATURE GAUGE
N - DRYING TOWER
O - ORIFICE PLUG
X - AIR LUBRICATOR & FILTER
Y - FLOWMETER
Z - OPERATING AIR CYLINDER

V1 — WET GAS INLET & REACTIVATING GAS DISCHARGE VALVE.
V3 — DRY GAS OUTLET & REACTIVATING GAS INLET VALVE.
V8 — BLEED GAS CONTROL VALVE.
V9 — CHECK VALVE.
V11 — HIGH PRESSURE RELIEF VALVE.
V12A - SOLENOID VALVE, AIR CYLINDER.
V13C - OPERATING AIR CYLINDER SHUT-OFF VALVE.

Ref. Dwg. KEMP Mfg. Co. 34625

Fig. 511-3 Schematic diagram of flow through the towers during reactivation and drying.

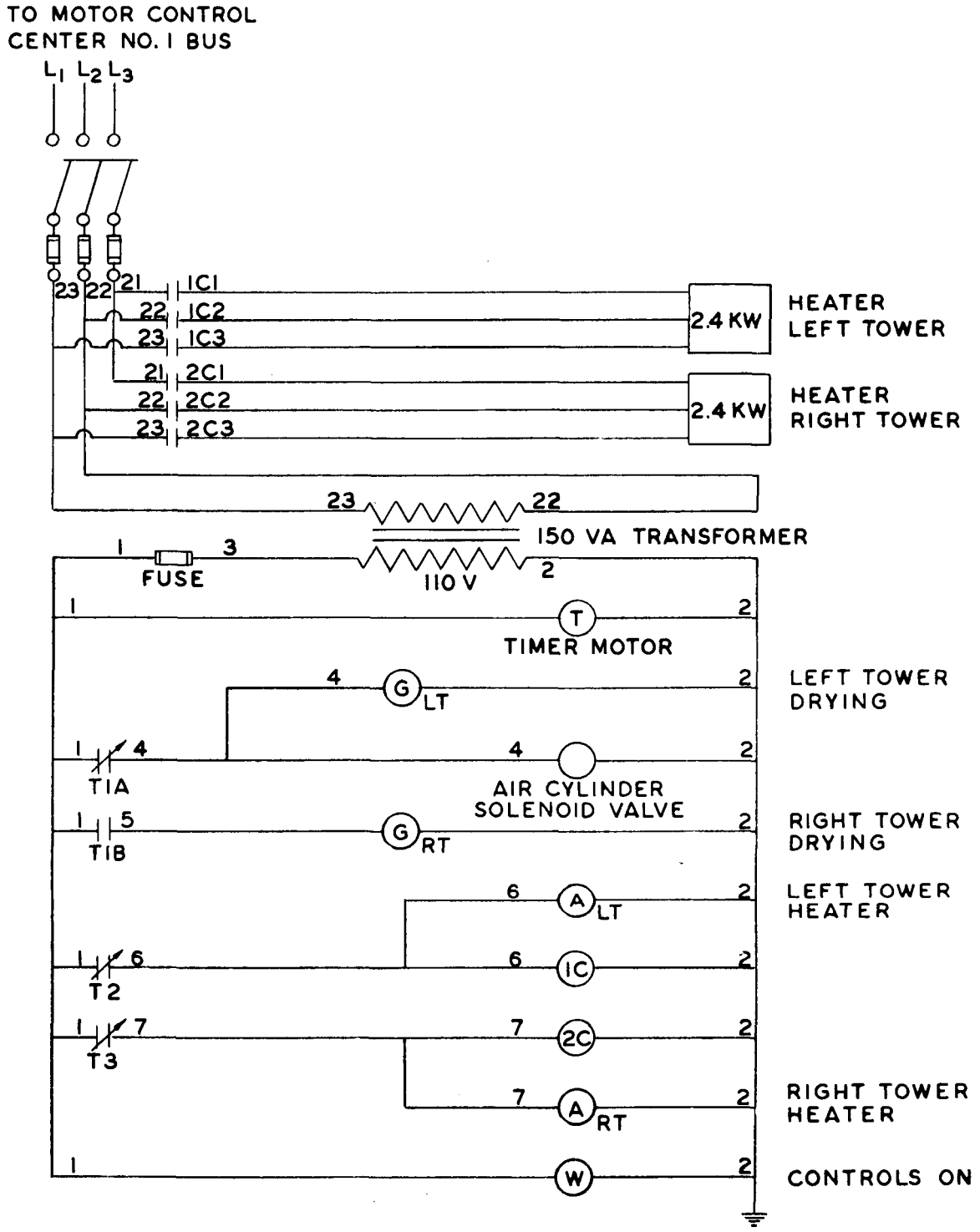

Ref. Dwg. KEMP Mfg. Co. 02339-1

Fig. 511-4 Schematic diagram of electrical control of air dryer control system.

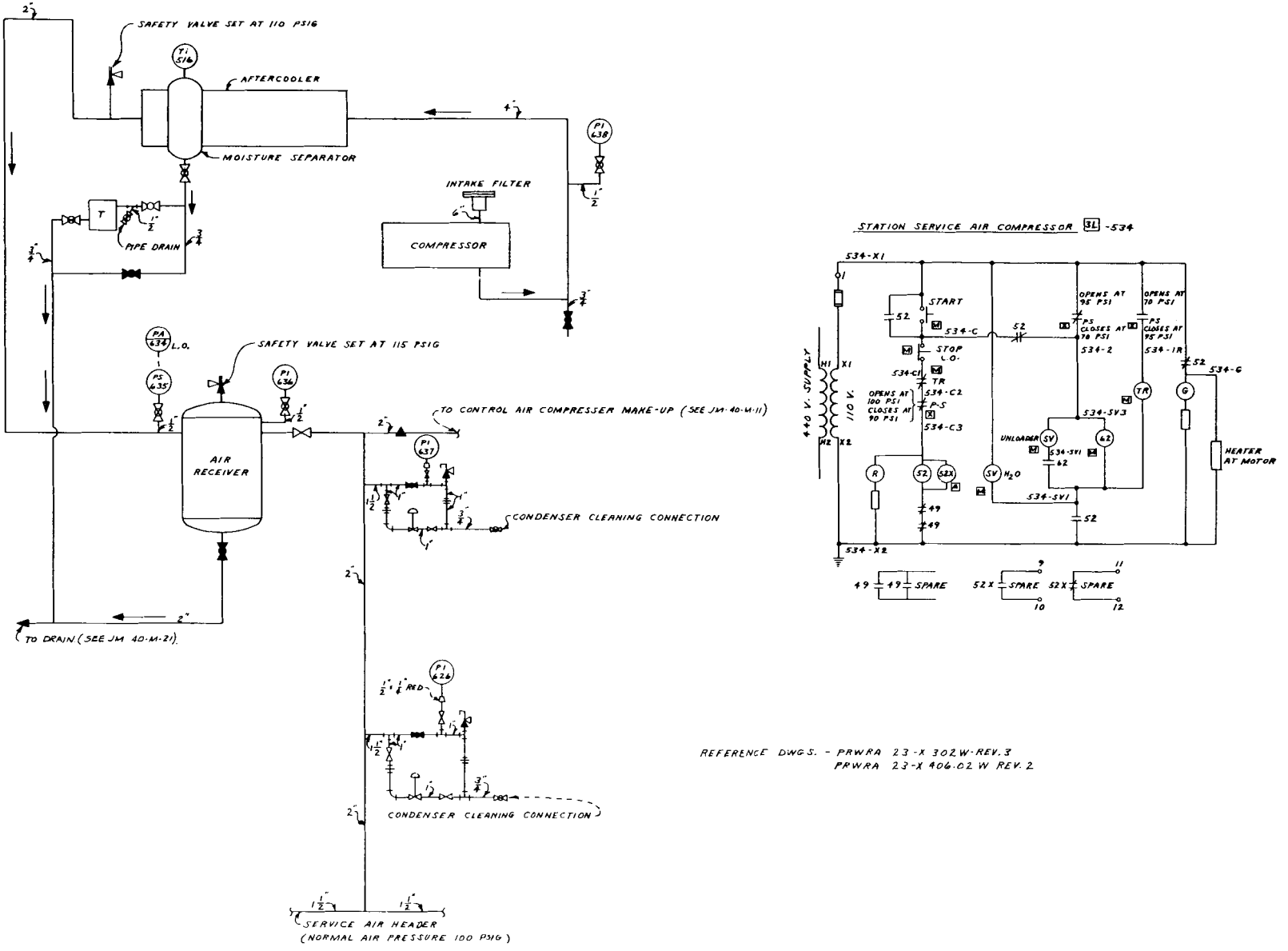

Fig. 511-5 Schematic piping and compressor control wiring diagram for station service air system.

600. ELECTRICAL GENERATION AND DISTRIBUTION

601. MAIN POWER SYSTEM

The electrical power distribution system is designed in accordance with conventional power plant practice, but modified, however, to meet the special requirement of reliable station power service for a reactor power plant installation.

The generated power is delivered to the Puerto Rico Water Resources Authority network through two 38,000-volt systems — the Aguada 38 kv line and the Rincon 38 kv line. These lines provide the necessary power for general station service during startup operations when the generator is not in service. Figure 601-1 shows the single line interconnection diagram for the 13.8 kv generator, the 13.8/38 kv main power transformer and the incoming 38 kv lines with associated protective relaying.

The generator terminal leads are connected directly to the outdoor main power transformer 13.8 kv low voltage terminals through a three-phase, non-segregated, bus duct. The 4 ft wide by 2 ft high aluminum bus duct contains the three 1-1/2 in., extra heavy (IPS) copper phase leads which are anchored and supported 15 in. apart by integral 15,000 volt insulator bushings. The phase leads are each continuously rated at 1200 amperes. The support bushings are spaced along the bus length to adequately withstand the forces imposed by a 10,000 ampere short circuit at 13.8 kv. The bus duct rating is 15 kva, 60-cycle, 95 bil. The generator-leads bus duct (at centerline elevation 30 ft - 10 in.) extends from the underside of the generator to the containment building shell where the generator-leads penetrate the shell in going to the outdoor main power transformer. The bus duct routing within the containment building is shown in Fig. 906-5. The generator-leads duct penetrates the main floor in the machine shop in the vertical run to elevation 43 ft - 4 in., where the leads are connected to the three 15 kv gas-tight bushings. In the machine shop the bus duct is enclosed within a wire mesh partition with double doors to prevent unauthorized access to the bus section. Details of the mounting of the 15 kv fixed-stud insulator bushings to the building shell are shown in Fig. 905-2.

The main power transformer (Westinghouse Type SL, Class OA/FA, Insulour Insulation), is a three-phase, two-winding, outdoor, oil-immersed type, rated 20,000 kva continuous self-cooled, and 26,667 kva forced-air cooled at 55°C rise above a 40°C ambient. The WYE connected primary side is provided with four 2-1/2 percent taps above the 38 kv high tension voltage; the no-load tap changer permits changing the connections in the high voltage side from outside the transformer tank when the transformer is deenergized. The 13.8 kv low voltage secondary winding is delta connected. The respective insulation rating of the primary and secondary windings is 46 kv and 15 kv respectively. The accessory equipment integral with the unit is the following:

—Nitrogen cylinder with gauges, valves, alarm contacts and connections for maintaining an inert gas atmosphere above the oil level.

—Magnetic liquid level gauge with low level alarm contacts.
—Liquid temperature indicator with high temperature alarm contacts.
—Mechanical pressure relief (10 psig setting) with alarm contacts for remote indicating relief device trip and semaphore for locally indicating trip.
—Forced air cooling fans (2.7-kva, 208-v, 3-phase, 60-cycle).
—Three 600/5 amperes multi-ratio bushing current transformers in the high voltage bushings (one per bushing).
—One 600/5 ampere multi-ratio bushing current transformer in the 15 kv neutral bushing.
—A thermal load indicating relay in one phase of the low voltage winding with contacts for the forced-air fan control and annunciation.

The high voltage line connection to the 38 kv bus, through the disconnect switches and the generator breaker is shown on Fig. 601-1. The 38 kv switchyard contains the galvanized steel bus support structures and the three 1200 ampere continuous rated, 46 kv, 1500 mva interrupting capacity, oil circuit breakers. These breakers (Westinghouse 460 G 1500) for the generator feeder and one each for the incoming Aguada and Rincon 38 kv lines, are each provided with electro-pneumatic, mechanical and electrical trip-free mechanism. The circuit breaker operating mechanism is spring opened and pneumatically closed with air supplied by an integral compressor. Each circuit breaker is operated from the control room and is furnished with six (6) 1200/5 multi-ratio relaying current transformers and three (3) single ratio metering current transformers. The oil circuit breakers are provided with manually operated 46 kv, 600 ampere disconnect switches for isolating the circuit breaker from the 38 kv bus for routine maintenance or repair. The disconnect switches are key-interlocked with the circuit breaker so that the disconnects cannot be opened unless the circuit breakers are opened first. Figures 603-2 and 603-3 show schematically the electrical control circuitry for the operation of the generator and incoming line 38 kv breakers respectively.

The generator 1 in. (IPS) copper neutral lead is grounded through a 25 kva, single-phase, 12,000/240-volt, 60-cycle, Askarel insulated, distribution transformer with a secondary side loading resistor as shown in Fig. 601-1. The neutral grounding cubicle housing the transformer, resistor, and neutral disconnect switch is located below the generator at floor elevation 27 ft - 0 in., as shown in Fig. 906-5. A ground detector relay (64) and a sensitive overvoltage relay (59) in parallel with the loading resistor, annunciate the presence of a ground fault.

The generator is protected by a differential relay (87G), overcurrent relays (51G), a field failure relay (21F), a negative phase sequence relay (46), and the generator surge protection equipment. Current transformers, 1200/5 amp, for the protective relays are mounted on the three generator leads and the three neutral leads. Three current transformers are on each generator lead and on one of the neutral leads; the other two neutral leads have two each only. A unit differential relay

(87U) is provided to protect the generator, main power transformer and the generator breaker (C in Fig. 601-1). Supplementary current transformers (600/5 amp) in the three 38 kv phases, on either side of the generator breaker operate with the generator current transformers to give the differential protection. Figure 601-4 shows the schematic circuitry for the protective relays (87G) and (87U) which, when operated trip out, through lockout relay 86, the generator breaker, the generator exciter breaker and the trip valve. The operation of the 87G and 87U differential relays will not trip out the incoming line breakers so that station service is available from the 38 kv bus.

The operation of the 38 kv bus protective relay 87B (refer to Fig. 601-1 for the location of the associated current transformers) will trip the generator breaker (C), the two 38 kv line breakers (A and B), the station service main breaker (D) and the turbine trip valve. Figure 601-5 shows the electric elementary diagram for the 38 kv bus protection relay. This condition of complete loss of power to the station automatically scrams the reactor, initiates the decay heat cooling in the emergency condenser and starts the emergency generator to keep the vital services in operation.

The 38 kv transmission lines are protected by directional ground relays and directional distance overcurrent relays.

Normal station power is obtained through the station service transformer which steps down the voltage from 38 kv to 480 v. This transformer (Maloney Electric Co. Design No. 60984) is a three-phase, two-winding, outdoor, oil-immersed type rated 2500 kva continuous self-cooled and 3125 kva continuous forced air cooled at 55°C rise above a 40°C ambient. The WYE connected 38 kv primary winding is provided with four no-load 2-1/2 percent full load taps above the 38 kv rating. The 480 volt secondary winding is delta connected. The respective insulation rating of the primary and secondary windings is 46 kv and 600 volt respectively. Standard accessory equipment as follows is integral with the unit for transformer protection:

- —Winding temperature relay and temperature indicator for starting fans at 70°C, annunciating at 90°C and tripping breaker at 105°C.
- —Liquid temperature indicator with alarm contact which initiates annunciator when liquid is 80°C.
- —Liquid level gage with low level alarm contact, which initiates alarm warning when level is 3 in. below normal.
- —Three (3) 600/5 amperes multi-ratio current transformers in the high voltage bushings and one (1) 600/5 ampere multi-ratio bushing current transformer in the 15 kv neutral bushing for protective relaying.

The station service transformer is protected by primary power fuses of the current limiting type and by over-current relays. Figure 601-6 shows the over-current relay protection circuit.

The station service transformer secondary side circuit breaker is an integral part of the 440 v outdoor switchgear cubicle mounted in the transformer yard. Figure 601-7 shows the components and plant outdoor auxiliaries supplied power from the 440 volt outdoor switchgear. The station service secondary breaker in the switchgear cubicle is a Westinghouse Type DB-100, drawout type, 4000 ampere rated, 100,000 ampere interrupting capacity, air circuit breaker type, remotely operated from the control room (see Fig. 601-8). The outdoor switchgear also contains a 1600 ampere ACB for motor control center No. 4 at the sea intake structure and space for the future addition of a 1600 amp breaker. The 1600 ampere breakers are Westinghouse Type DB-50 with an interrupting capacity of 50,000 amperes. Figure 601-9 shows the control circuit for the breaker serving the 1600 ampere bus supplying power to the outdoor auxiliaries indicated in Fig. 601-7. The integral starters are provided with fuse disconnect switches of the current limiting type and the bus structure is braced to withstand 50,000 rms symmetrical amperes.

The station power from the 440 volt outdoor switchgear to the 440-volt indoor switchgear cubicle is delivered by a 4000 ampere, metal enclosed, bus duct. The individual three phase leads penetrate the building shell through gastight, fixed stud, 1.2 kv insulator bushings as shown in Fig. 905-2.

The indoor 440-v switchgear is of similar construction as the outdoor switchgear. It contains the air circuit breaker supplying power to motor load centers 1 and 2, a circuit breaker for load center 3, the individual circuit breakers for the plant auxiliaries (reactor feedwater pumps, and reactor preheater) and the plant lighting circuit breaker. Figure 601-10 shows the control circuits for these breakers and Fig. 601-11 shows the control circuit for the 440-v bus undervoltage relay protection system.

All of the motor load centers are located in the switchgear room below the control room as shown in Fig. 906-5. In this same location are the 440-v valve motor load center and the 225-kva, 440-v primary, 120/208-v secondary transformer for lighting and general plant services. Figures 601-12 and Figure 601-13 show the single line diagrams for the 440-vac valve motors and the 120/208-v distribution service respectively.

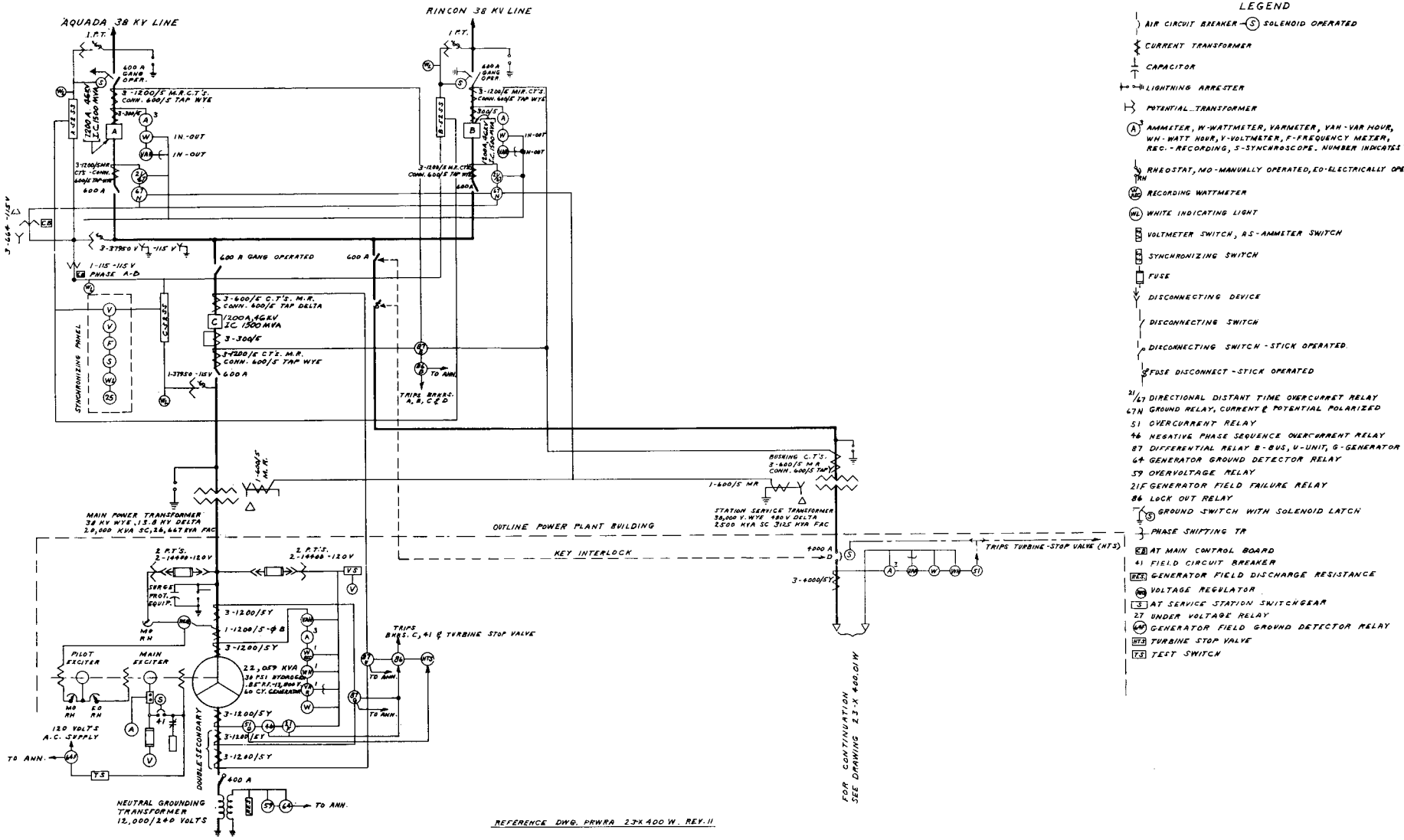

Fig. 601-1 Electrical distribution single line diagram.

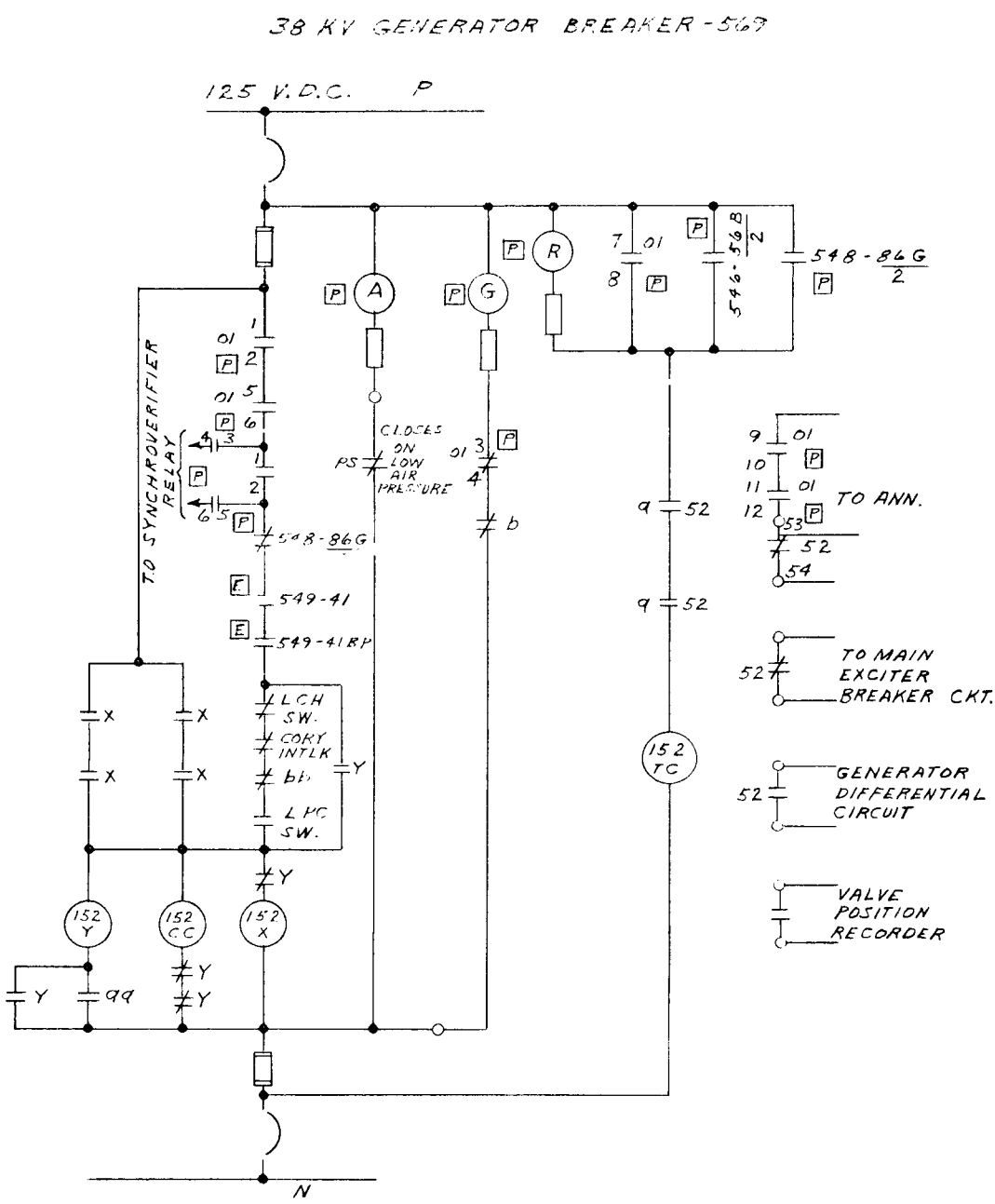

CONTROL SWITCH DEVELOPMENT
38 KV GENERATOR BREAKER

CONTACTS HANDLE END	POSITIONS				
	CLOSE	NORMAL AFTER CLOSE	NORMAL AFTER TRIP	TRIP	L.O. ON TRIP
1 - 2	X	X	X	X	
3 - 4	X	X	X	X	
5 - 6	X				
7 - 8				X	X
9 - 10		X	X		
11 - 12	X	X			

X - DENOTES CONTACT CLOSED
SPRING RETURN TO NORMAL

REFERENCE DWG. PKWKA 23x406.04W REV. 3

Fig. 601-2 Schematic electrical control diagram for generator 38 kv breaker.

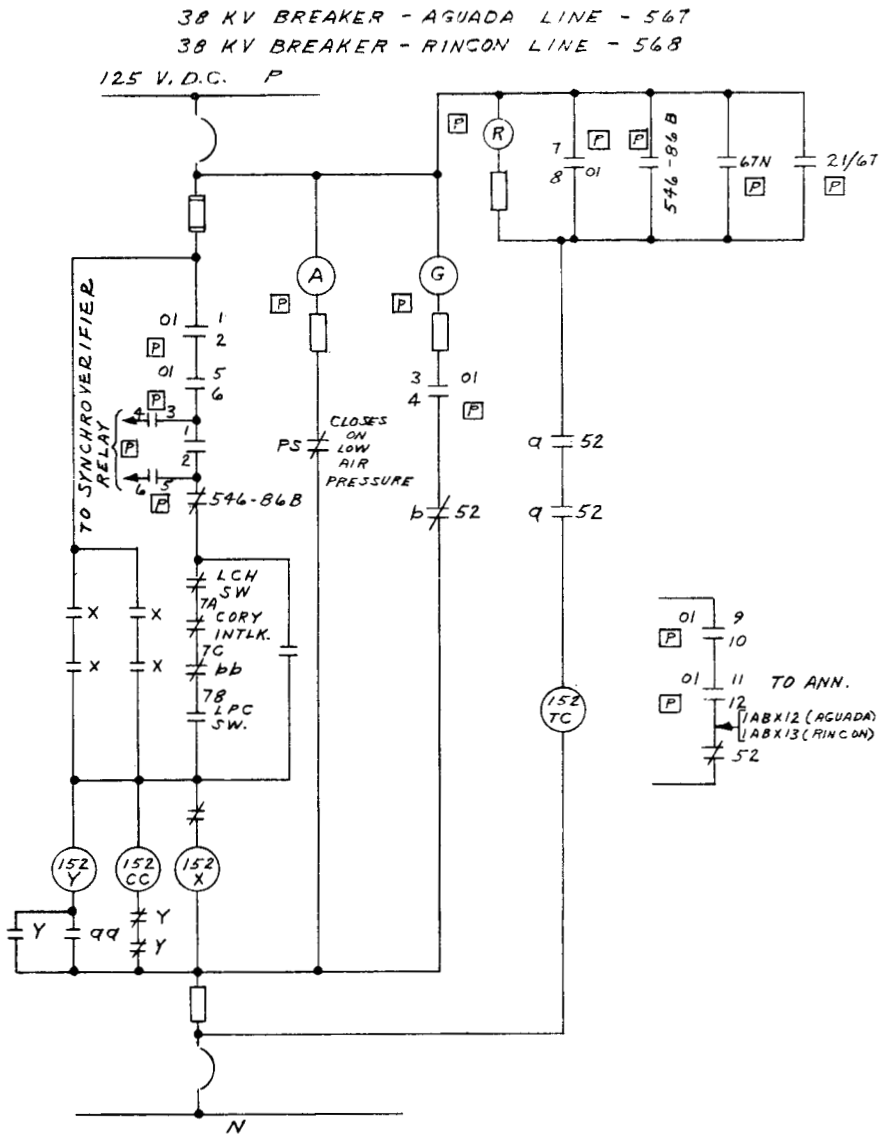

38 KV BREAKERS - AGUADA & RINCON LINE
CONTROL SWITCH DEVELOPMENT

CONTACTS HANDLE END	POSITIONS				
	CLOSE	NORMAL		TRIP	L.C. ON TRIP
		AFTER CLOSE	AFTER TRIP		
1 - 2	X	X	X	X	
3 - 4	X	X	X	X	
5 - 6	X				
7 - 8				X	X
9 - 10		X	X		
11 - 12	X	X			

X - DENOTES CONTACT CLOSED
SPRING RETURN TO NORMAL

REFERENCE DWG. PRWRA 23-X406, 04W REV. 3

Fig. 601-3 Schematic electrical control diagram for Aguada and Rincon 38 kv breakers.

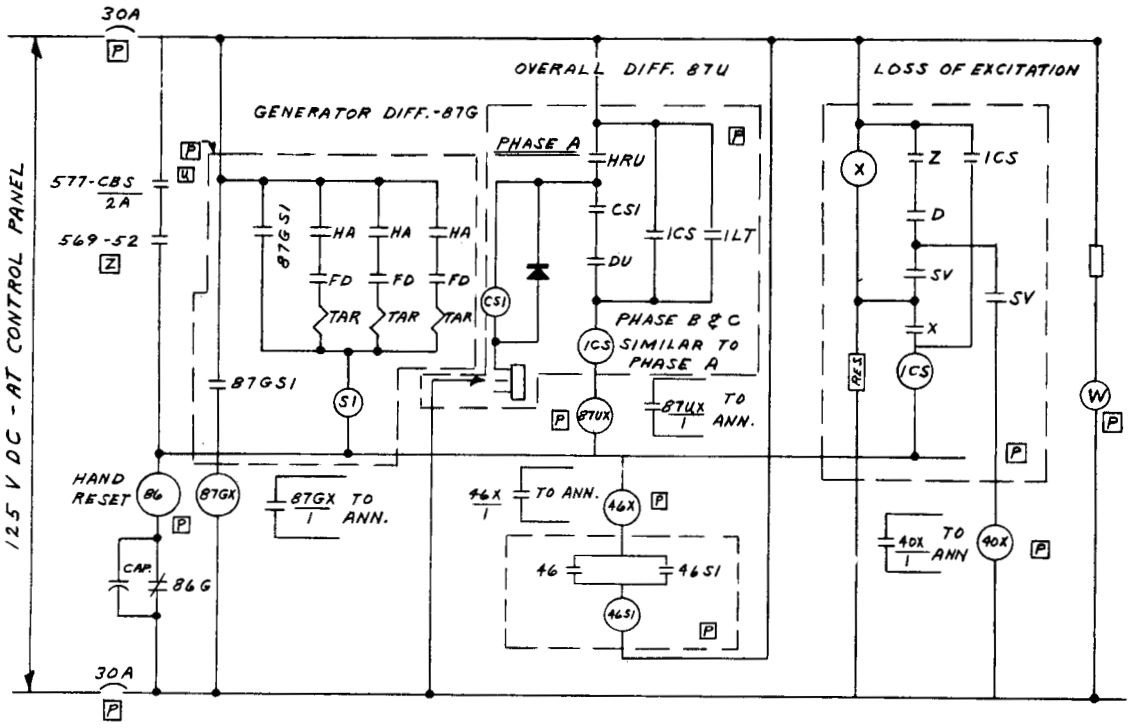

86G/1 MAIN EXCITER ACB
86G/2 38 KV GEN. O.C.B.
86G/3 MAIN TURBINE SOLENOID TRIP VALVE
86G/4 SPARE
86G/5 SPARE
86G/6 ANN.
86G/7 38 KV GEN. O.C.B.
86G/8 SPARE
86G/9 SPARE
86G/10 MAIN EXCITER ACB

REFERENCE DWG. PRWRA 23-X 406.03 W REV. 3

Fig. 601-4 Elementary electrical control diagram for generator protective relaying.

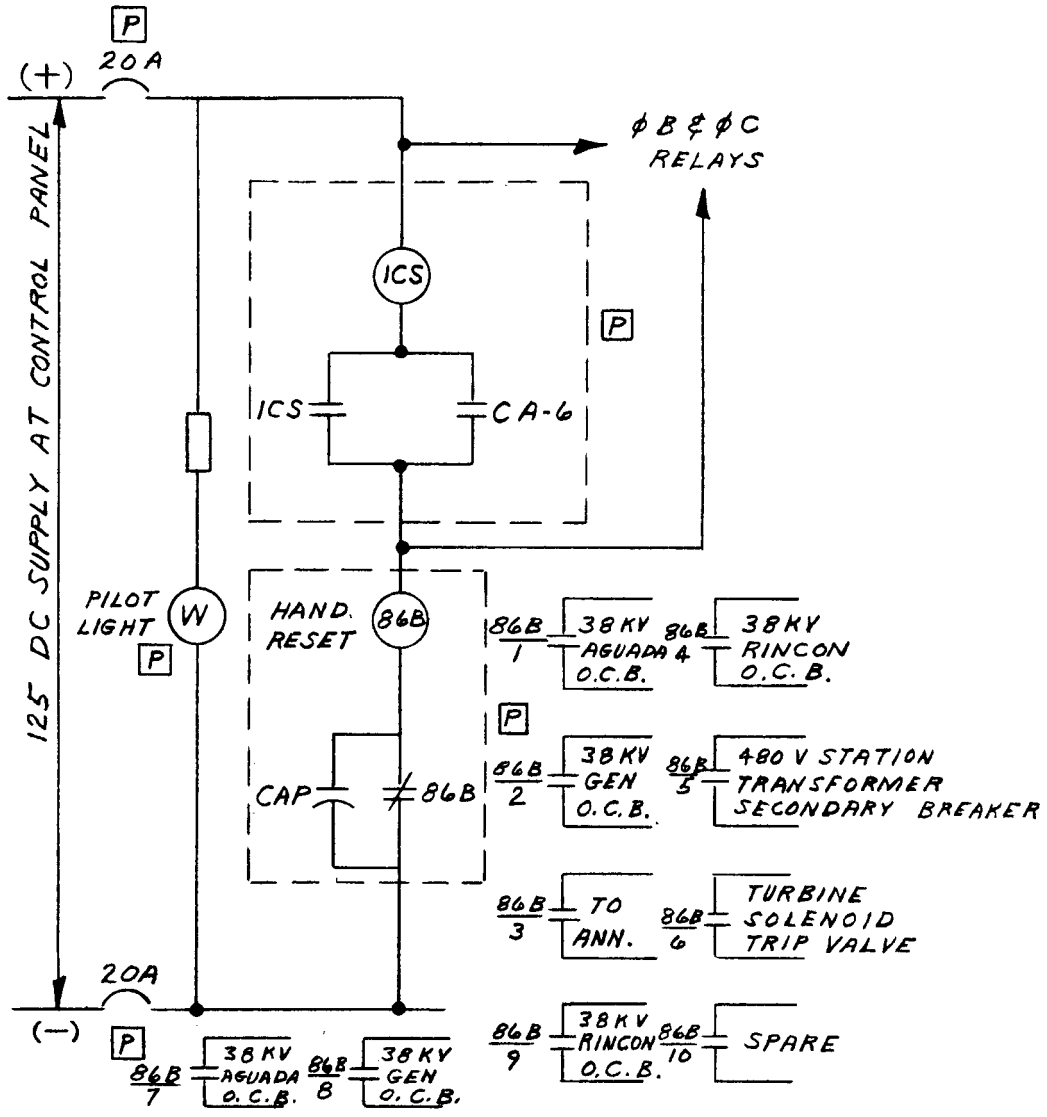

REFERENCE DWG. PRWRA 23-X 406.03W REV. 3

Fig. 601-5 Elementary electrical control diagram for 38 kv bus protective relaying.

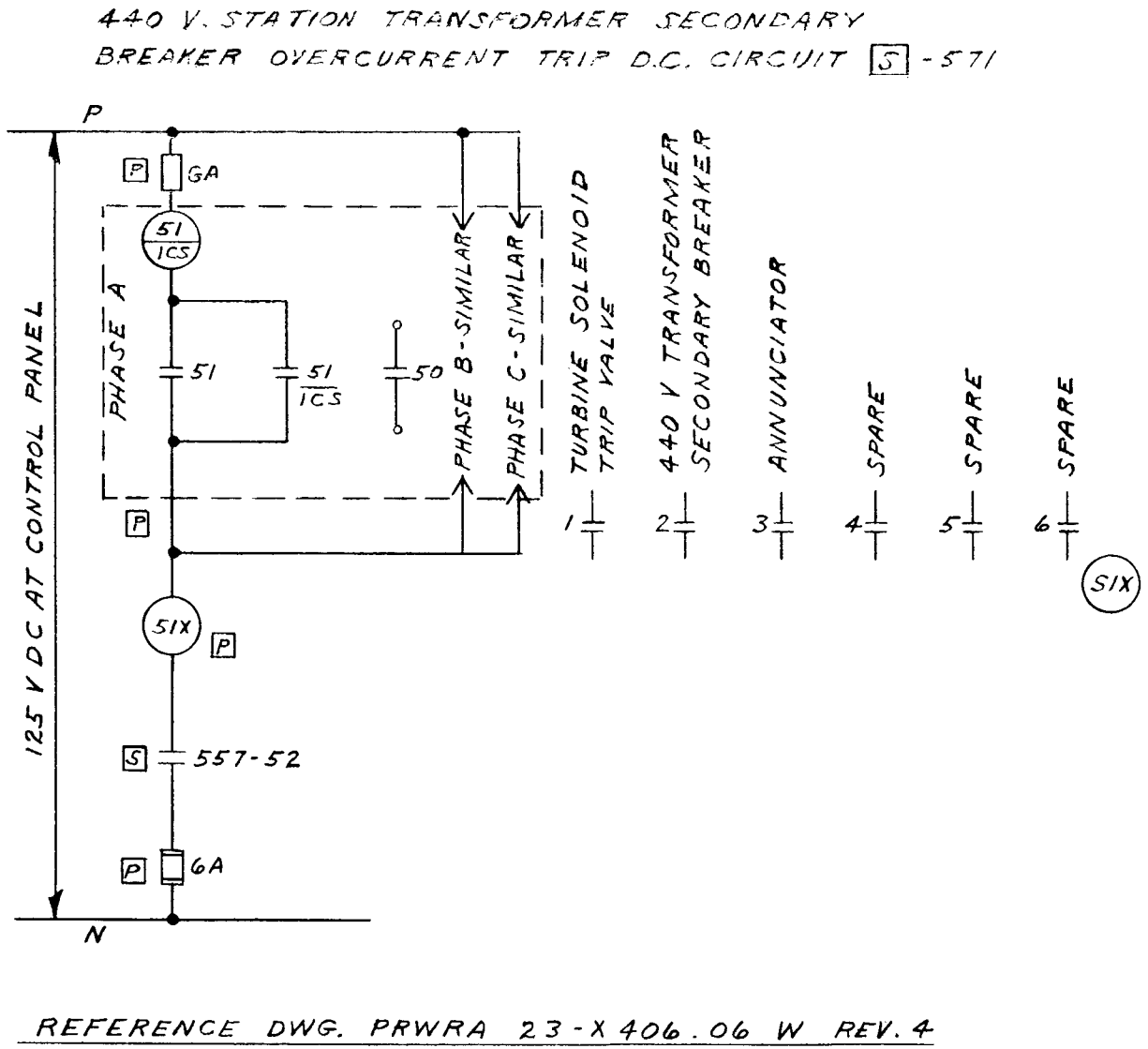

Fig. 601-6 Schematic electrical control diagram for station service transformer overcurrent protective relay.

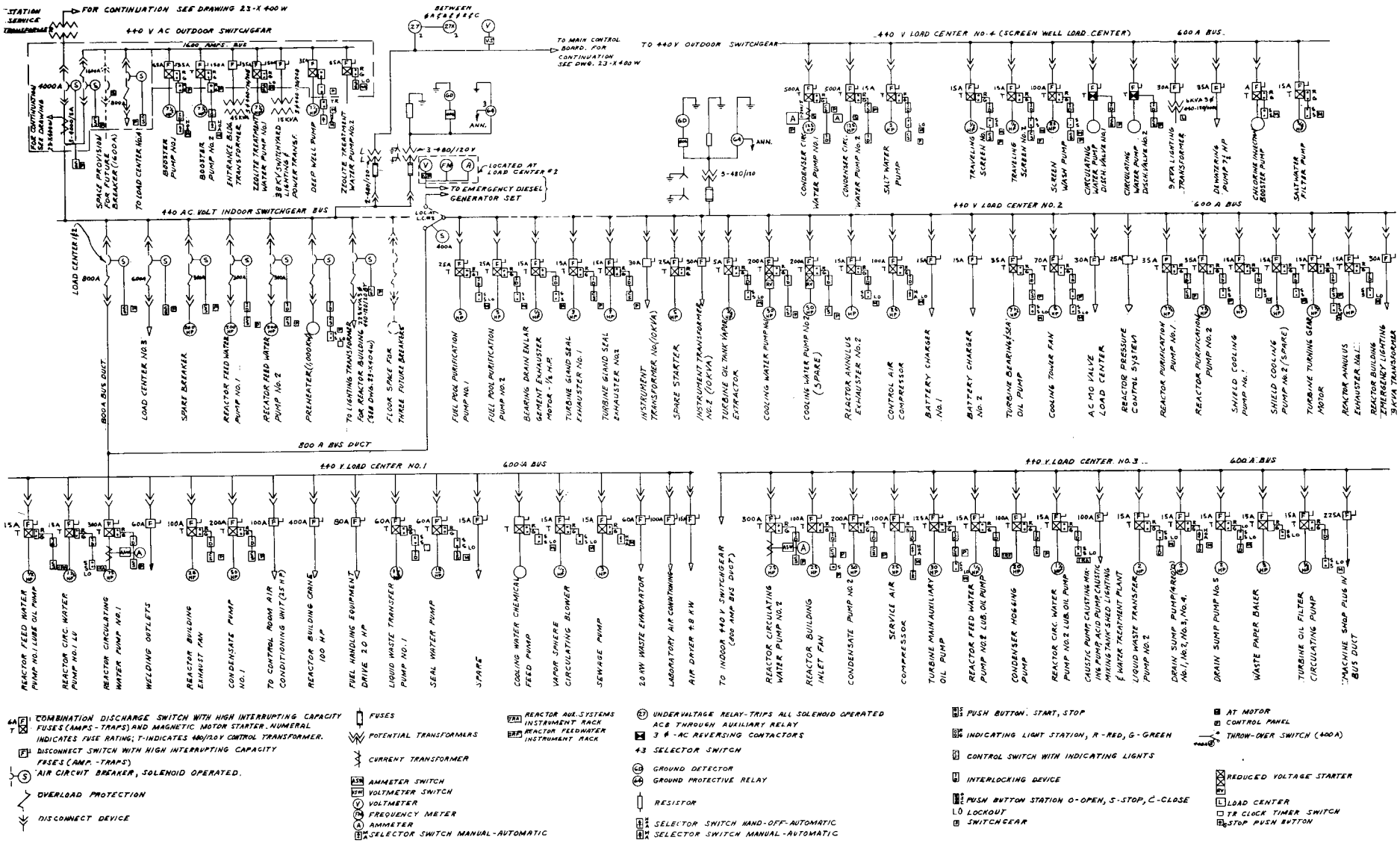

REFERENCE DWG. PRWRA 23-X 400.01 W REV. 12

Ref. Dwg. PRWRA 23X-400.02

Fig. 601-7 440 volt alternating current single-line diagram.

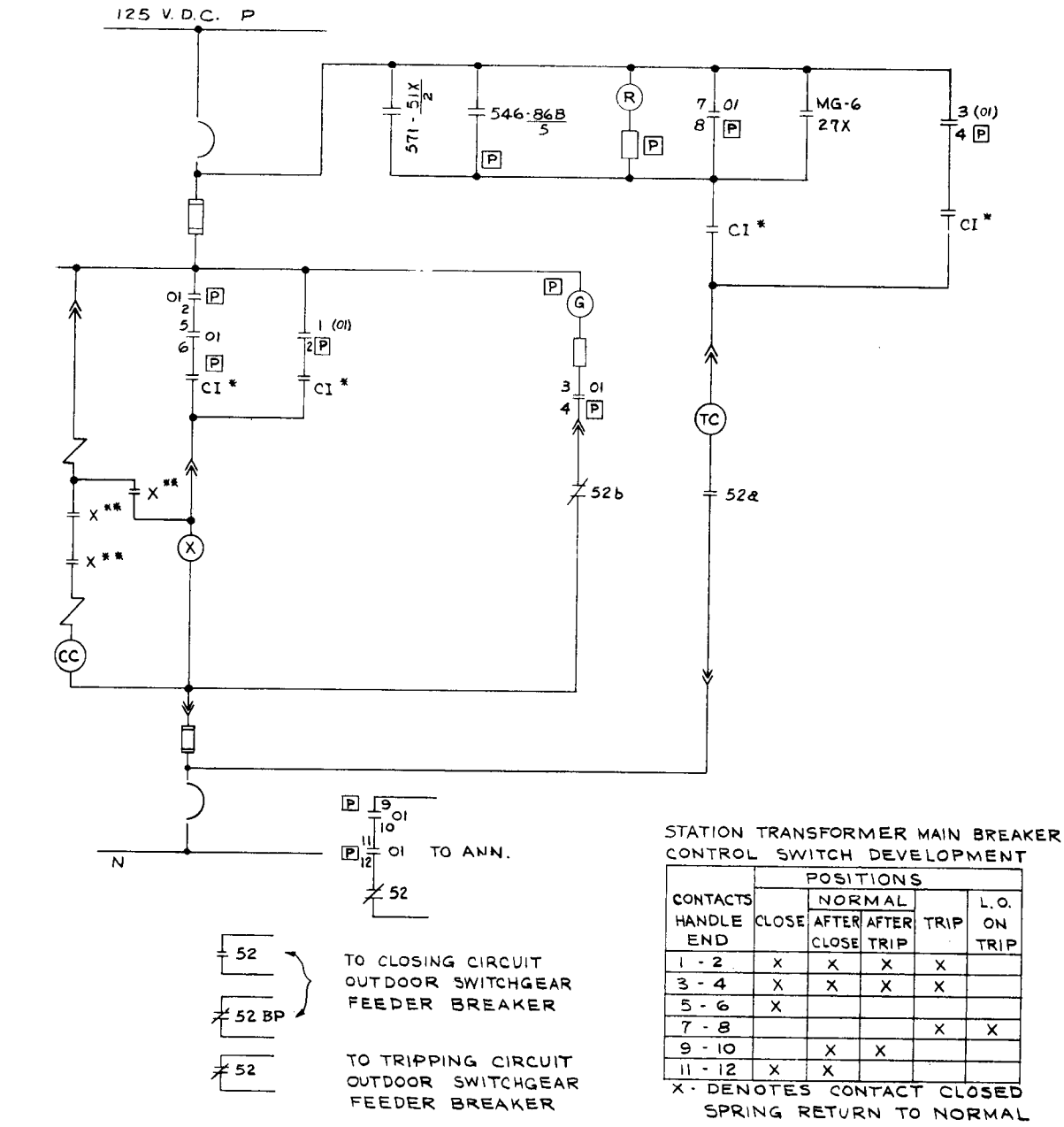

STATION TRANSFORMER MAIN BREAKER CONTROL SWITCH DEVELOPMENT

CONTACTS HANDLE END	POSITIONS				
	CLOSE	NORMAL AFTER CLOSE	NORMAL AFTER TRIP	TRIP	L.O. ON TRIP
1 - 2	X	X	X	X	
3 - 4	X	X	X	X	
5 - 6	X				
7 - 8				X	X
9 - 10		X	X		
11 - 12	X	X			

X - DENOTES CONTACT CLOSED SPRING RETURN TO NORMAL

* CI CELL SWITCH SHOWN WITH BREAKER IN TEST OR WITHDRAWN POSITION

** CLOSING MECHANISM MECHANICALLY TRIPS "X" CONTACT FREE OF "X" COIL INTERRUPTING CLOSING CIRCUITS

REFERENCE DWG. PRWRA 23 X 406.04W REV. 3

Ref. Dwg. PRWRA 23-X406.04w Rev. 3

Fig. 601-8 Schematic electrical control diagram for station service transformer secondary breaker.

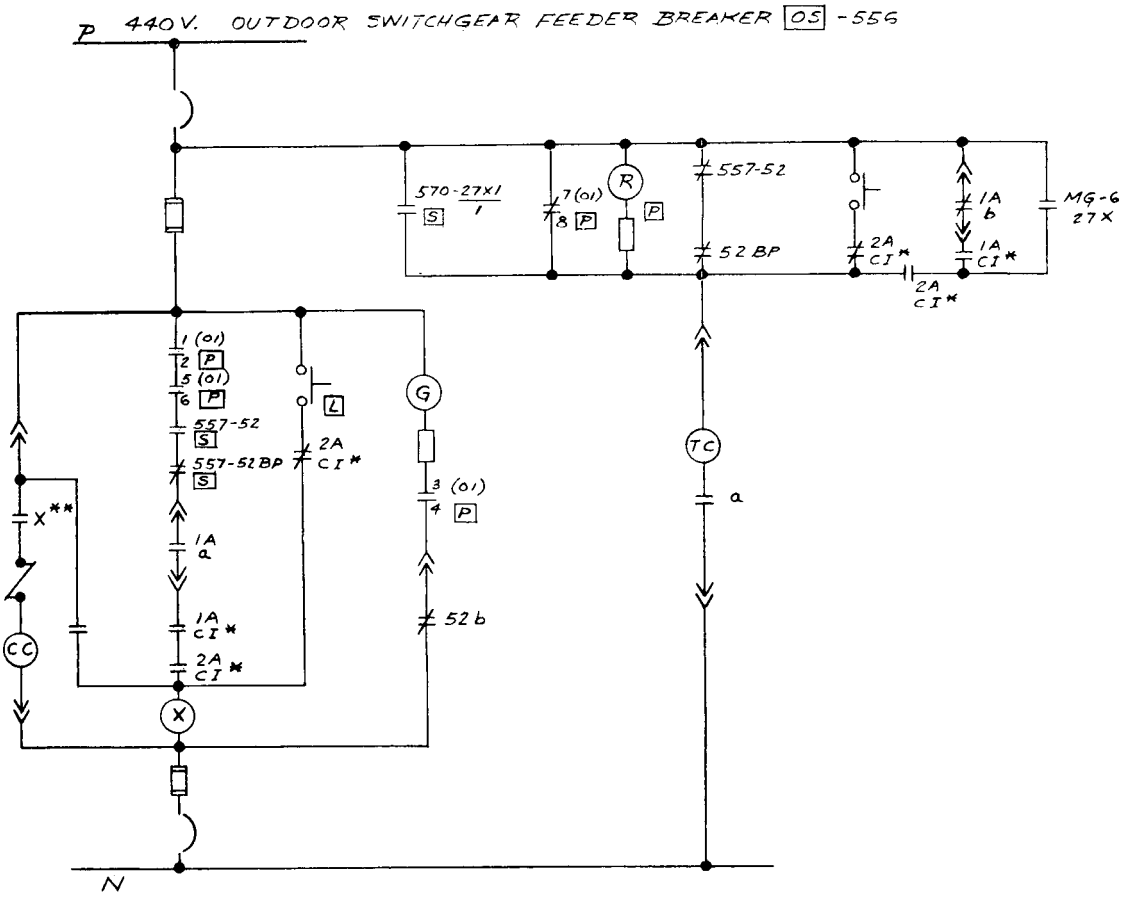

CONTROL SWITCH DEVELOPMENT
OUTDOOR SWITCHGEAR ENTRANCE BREAKER

CONTACTS HANDLE END	POSITIONS				
	CLOSE	NORMAL AFTER CLOSE	NORMAL AFTER TRIP	TRIP	L.O. ON TRIP
1 - 2	X	X	X	X	
3 - 4	X	X	X	X	
5 - 6	X				
7 - 8				X	X
9 - 10		X	X		
11 - 12	X	X			

X - DENOTES CONTACT CLOSED
SPRING RETURN TO NORMAL

* CI CELL SWITCH SHOWN WITH BREAKER IN TEST OR WITHDRAWN POSITION.
** CLOSING MECHANISM MECHANICALLY TRIPS "X" CONTACT FREE OF "X" COIL INTERRUPTING CLOSING CIRCUIT.

Ref. Dwg. PRWRA 23-X406.04w Rev. 3

Fig. 601-9 Schematic electrical control diagram for the 440 volt outdoor switchgear breaker.

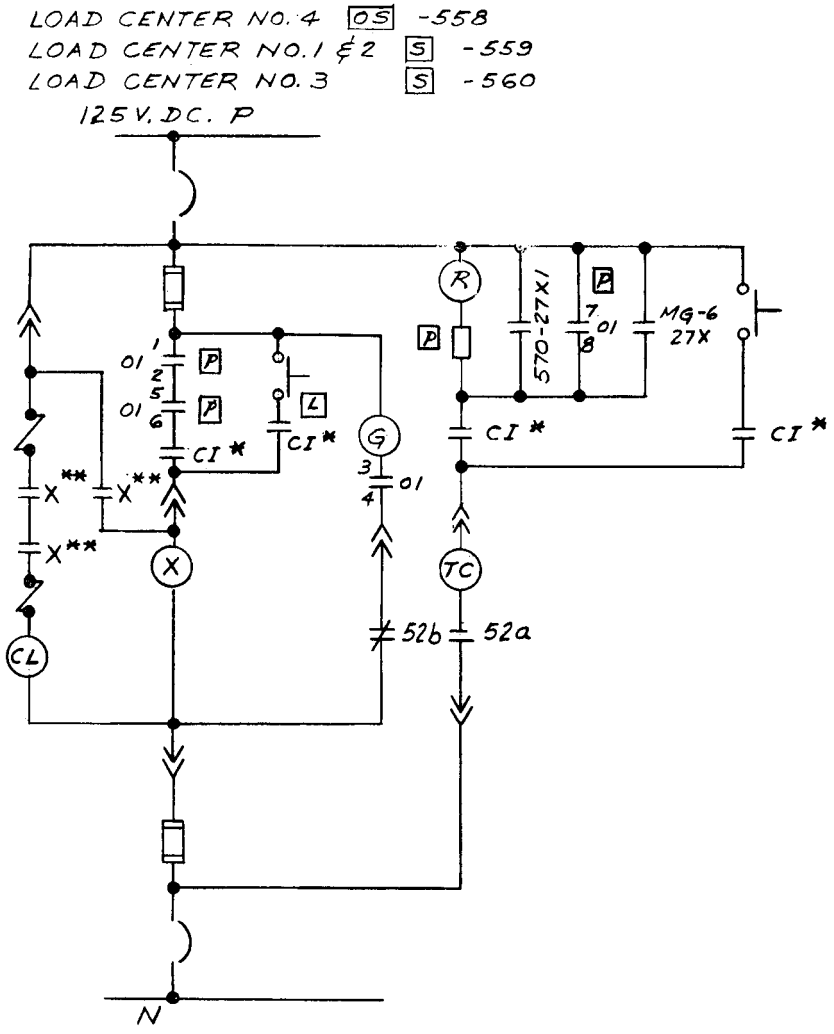

CONTROL SWITCH DEVELOPMENT

CONTACTS HANDLE END	POSITIONS				
	CLOSE	NORMAL AFTER CLOSE	NORMAL AFTER TRIP	TRIP	L.O. ON TRIP
1-2	X	X	X	X	
3-4	X	X	X	X	
5-6	X				
7-8				X	X
9-10		X	X		
11-12	X	X			

* CI CELL SWITCH SHOWN WITH BREAKER IN TEST OR WITHDRAWN POSITION.

** CLOSING MECHANISM MECHANICALLY TRIPS "X" CONTACT FREE OF "X" COIL INTERRUPTING CLOSING CIRCUIT.

Ref. Dwg. PRWRA 23-X406.04w Rev. 3

Fig. 601-10 Schematic electrical control diagram for 440 volt indoor switchgear breakers.

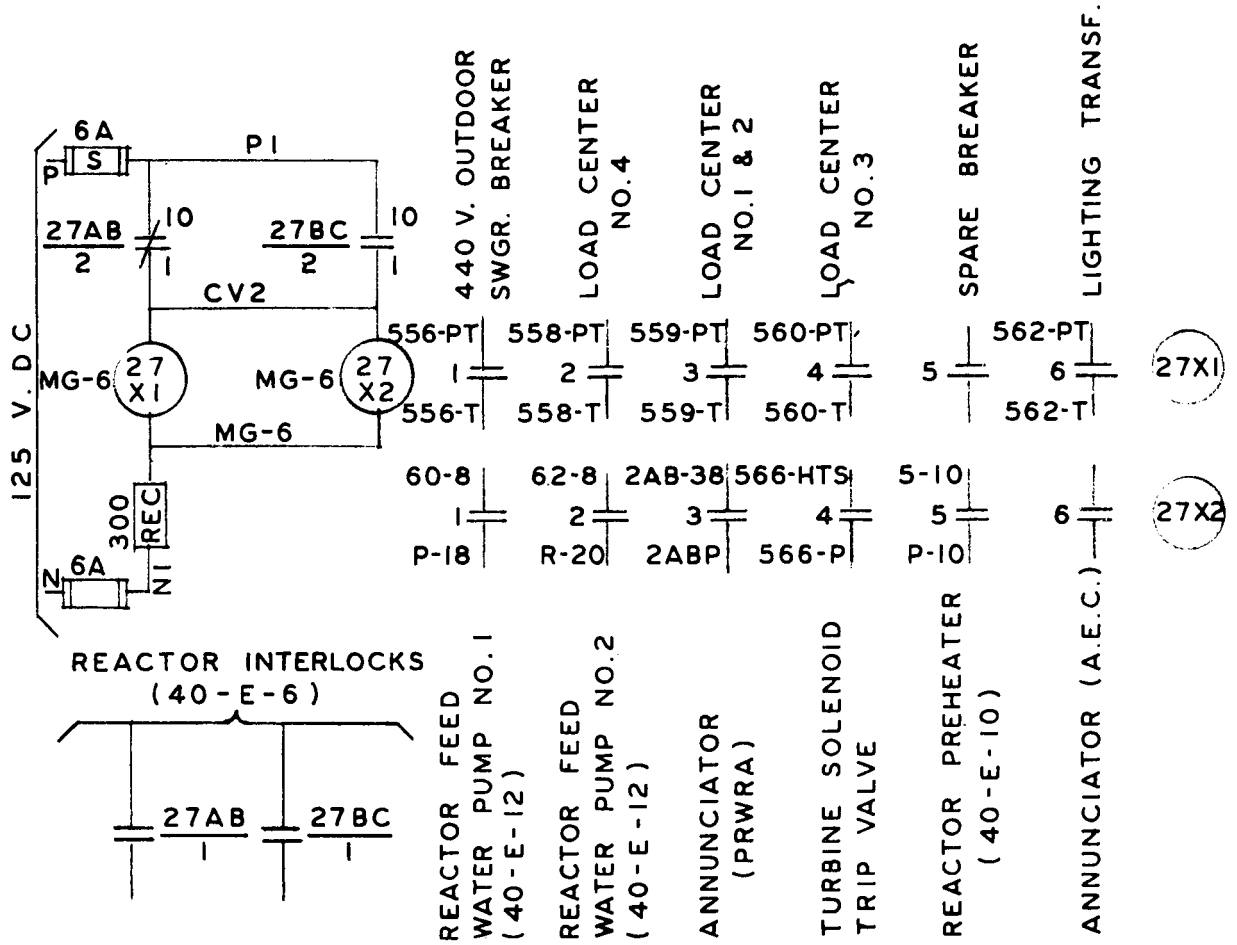

Fig. 601-11 Schematic electrical control diagram for 440 volt bus undervoltage protective relay.

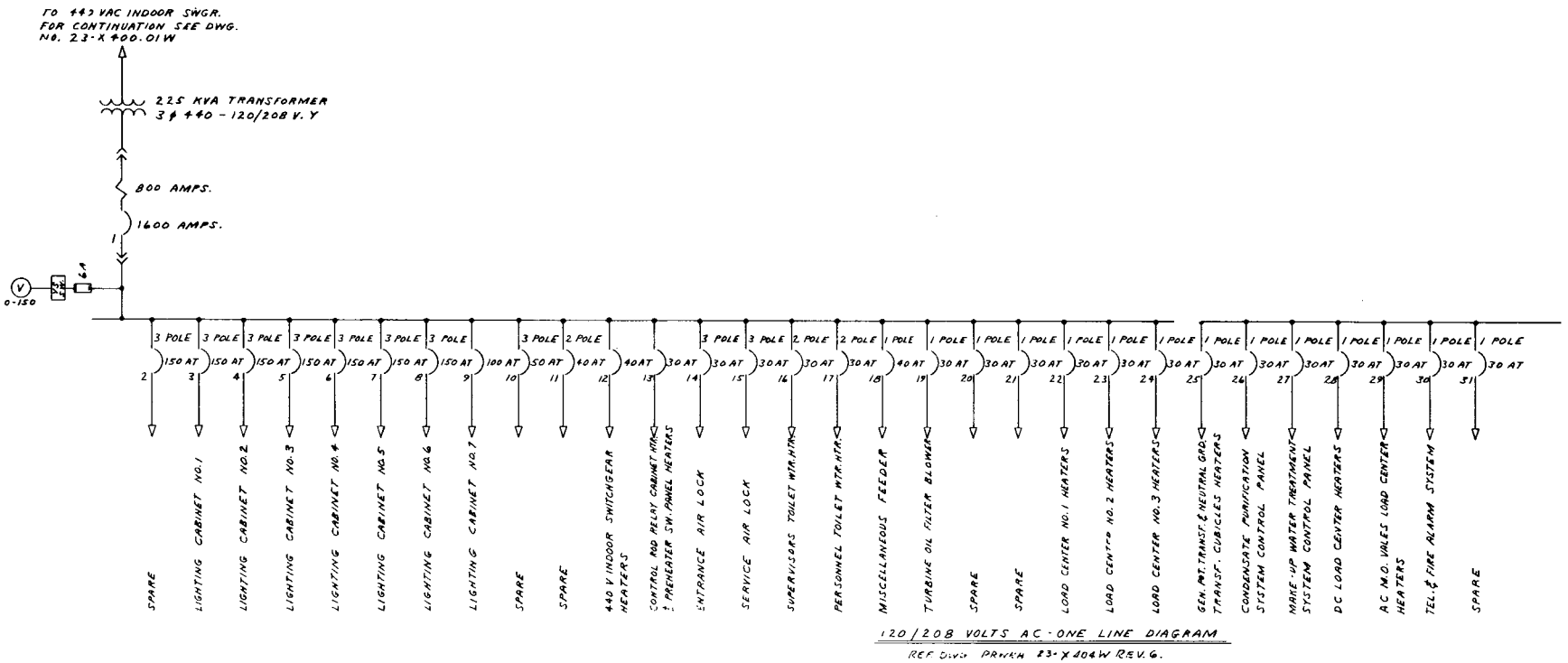

Fig. 601-12 Single-line diagram 120/208 VAC distribution.

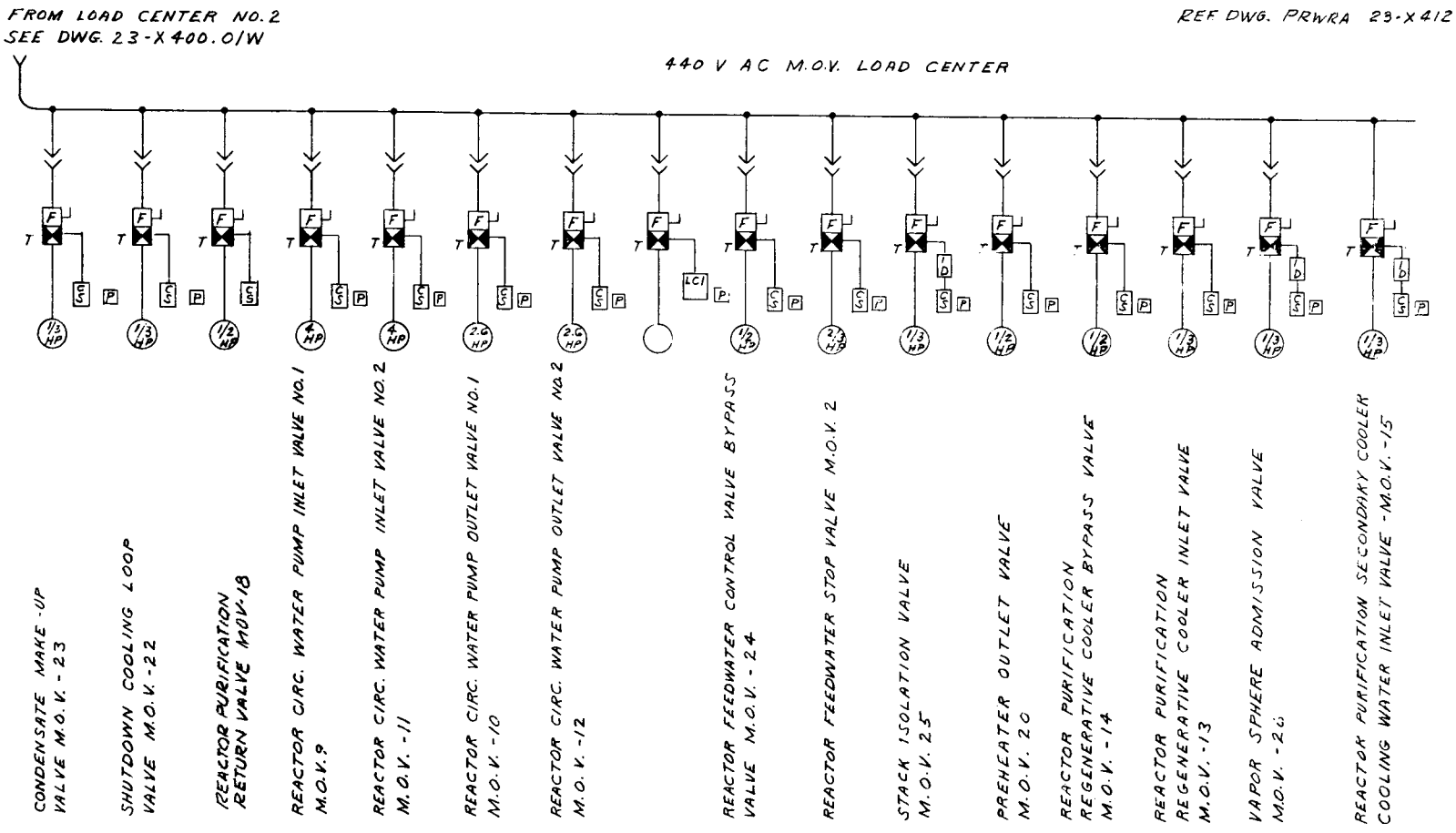

Fig. 601-13 Single-line diagram 440 volt alternating current valve motor center.

602. EMERGENCY DIESEL POWER SUPPLY

Should failure of the normal station service supply occur, power to load center number 2 (emergency load center) is automatically transferred to the 150-kw emergency diesel power supply. The diesel generator (D.W. Onan and Sons, Inc., Model 175DFE-6R8 Spec. 2324C) is rated for 150 kw continuous operation, 175 kw intermittent, at 80 percent power factor, at 1800 rpm, 480 volts, 3 phase, 60 cycles with a static exciter and voltage regulator.

The diesel generator unit is furnished with an integral control panel and is housed within a 13 ft wide by 19 ft long, concrete block building adjacent to the transformer yard. The fuel oil storage tank for the unit is buried underground near the building.

The diesel prime mover is equipped with a pressure lubricating gear pump. The lubrication system contains an oil filter and supplies full pressure lubrication to the crank shaft and connecting rod bearings. The cooling system consists of a tubular fin, pressure type radiator and integral centrifugal coolant pump. The starting system consists of a 24-volt electric starting motor and solenoid switch. The 24-volt, 200-ampere-hour storage battery is maintained by an automatic trickle charger that is continuously floating on the line to keep the battery fully charged and ready for instantaneous operation. The engine is equipped with a speed governor to provide speed regulation within 3-1/2 per cent through the load range of the generator. The engine is equipped with an auxiliary fuel tank, fuel oil filter and a built-in float switch to provide a constant head of fuel in the supply to the engine fuel pump. This auxiliary tank has sufficient fuel capacity to operate the diesel for thirty minutes after the underground tank is depleted.

The 150-kw generator is complete with a static exciter, potential transformers and current transformers. The frame is designed so that the generator windings, collector rings, commutator, etc., is protected against falling drip, dirt, and accumulation of foreign material. The generator insulation is rated for continuous duty at temperatures above 40°C. The generator is designed to start automatically on loss of station power and assume full rated load in 15 seconds and to maintain rated voltage variation within 2 per cent from no load to full load.

The diesel generator is equipped with a dead front type switchboard panel on which the following equipment is mounted:

1) Ammeter
2) Ammeter-phase selector switch
3) Voltmeter
4) Voltmeter-phase selector switch

5) Automatic voltage regulator
6) Voltage adjusting rheostat
7) Frequency meter
8) Generator main circuit breaker manual reset
9) Manual start and stop cut-off switch
10) Remote auto-start cut-off switch
11) Running time meter
12) Engine gauges and throttle control
13) Panel light and switch.

Remote indication in the main control room is provided to indicate:

1) Diesel stopped but ready for automatic starting
2) Diesel is cranking
3) Diesel is running
4) Diesel failure to start

To prevent overloading the generator during the transfer of power, a time delay circuit, schematically shown on Fig. 602-1, is used to permit automatic and manual sequential starting of the auxiliary devices required during the emergency operation.

Load center number 2, shown schematically on Fig. 601-7, supplies power for the operation of all the auxiliary equipment required for reactor safety such as:

1) Fuel pool purification pumps (2) - 5 hp
2) Bearing drain enlargement exhauster - 1/2 hp
3) Turbine gland seal exhausters (2) - 3 hp
4) Instrument transformers (2) - 10 kva
5) Turbine oil tank vapor extractor - 3/4 hp
6) Cooling water pumps (2) - 50 hp
7) Reactor annulus exhausters (2) - 1 hp
8) Control air compressor - 25 hp
9) Station battery chargers (2) - 5 kw
10) Turbine bearing and seal oil pump - 7-1/2 hp
11) Cooling tower fan - 5 hp
12) a-c Motor operated valve load center
13) Reactor pressure control hydraulic system (2) - 20 hp
14) Reactor purification pumps (2) - 7-1/2 hp
15) Shield cooling pumps (2) - 3 hp
16) Turbine turning gear motor - 1-1/2 hp
17) Reactor building emergency lighting transformer - 9 kva

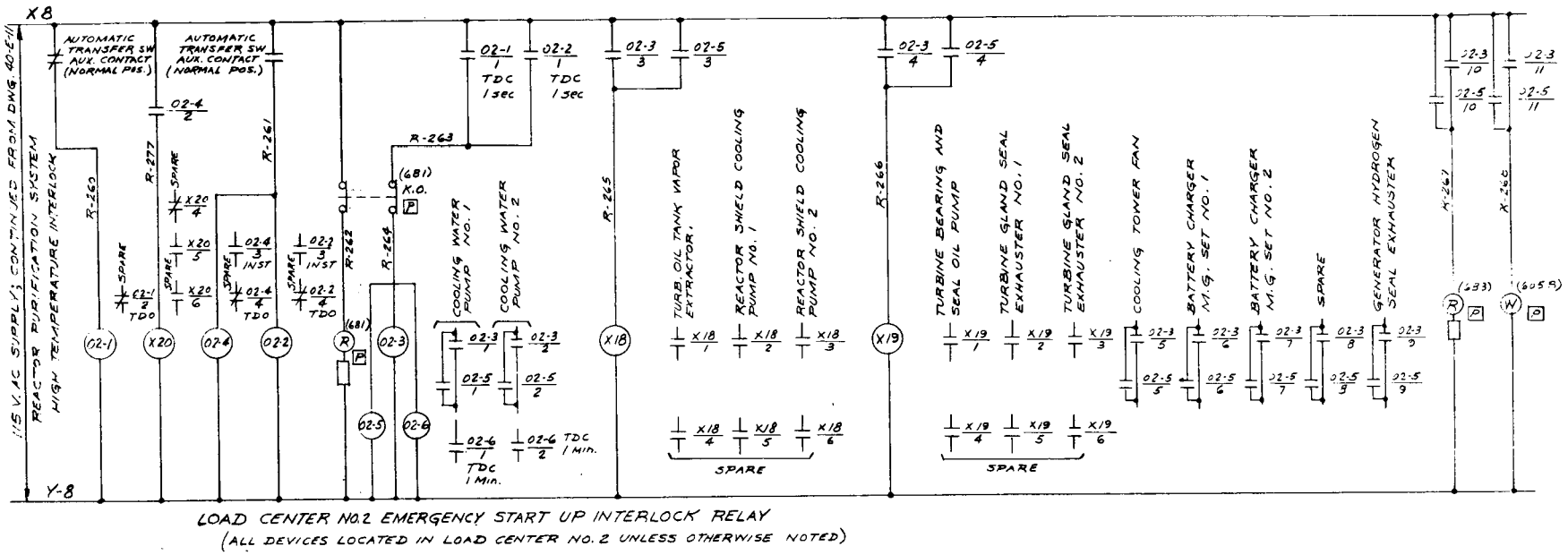

REFERENCE DWG. NO. 40-E-14 REV. 4

Fig. 602-1 Schematic diagram for emergency diesel time delay starting circuit.

603. DIRECT-CURRENT SUPPLY

Equipment and control which demand uninterrupted direct-current power are connected to the 125-volt d-c bus provided within metal enclosed switchgear.

The station battery is a lead-calcium alloy C & D type PCL-15, 60 cells, 125 V.D.C. with a 20-year life expectancy and with the following ampere-hour discharge ratings to a final voltage of not less than 1.75 volt per cell, at an initial temperature of approximately 77°F.

8-hr discharge rate	48.2 amp
3-hr discharge rate	96.4 amp
1-hr discharge rate	193 amp
1-min discharge rate	490 amp

The battery is capable of delivering a 1-min discharge rate of 945 amp to 1.50 volt per cell.

The battery is maintained fully charged by means of two (2) Westinghouse Rectomatic, automatically regulated, 3-kw Silicon Rectifiers (one spare). The charger maintains the battery at full charge by continuously floating on the battery, and handles the plant normal d-c load such as indicating lights, relays, and d-c instruments. Figure 603-1 shows schematically the battery charging circuit. The static battery charger was preferred to the conventional motor generator set for its higher dependability and lower maintenance.

Connected to the 125-volt d-c battery bus shown in Fig. 603-2 are the following services listed in Table 603-1.

Table 603-1 125-V d-c DISTRIBUTION

1) Emergency Lighting Load
2) Control Panel Instruments and Relays
3) Generator Field Breaker Cubicle
4) Turbine By-Pass Control Circuit (Reactor Pressure Control System)
5) Hydrogen Control Cabinet
6) 440-Volt Outdoor Switchgear
7) 38-kv Switchyard
8) 125-Volt d-c Control Power Distribution Cabinet
9) Direct Current M.O. Valve Load Center (see Fig. 603-3)
10) Emergency Bearing and Seal Oil Pump
11) 440-Volt Indoor Switchgear

The location of the battery set, rectifier units, and the 125-volt distribution panel is in the electrical switchgear room at basement floor level 16 ft, 0 in.; Fig. 906-5 shows their location.

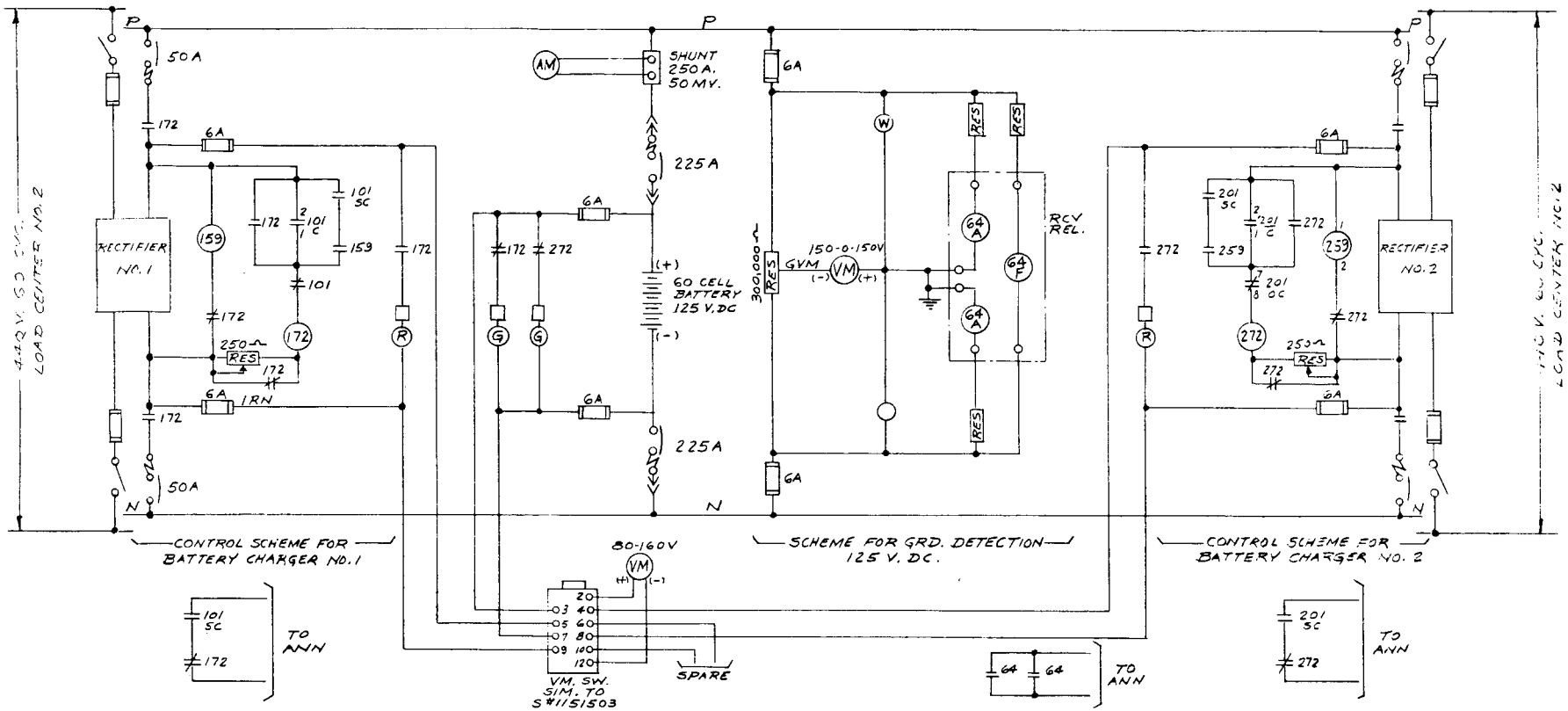

Ref. Dwg. PRWRA 23-X404w Rev. 6

Fig. 603-1 Battery set elementary wiring diagram.

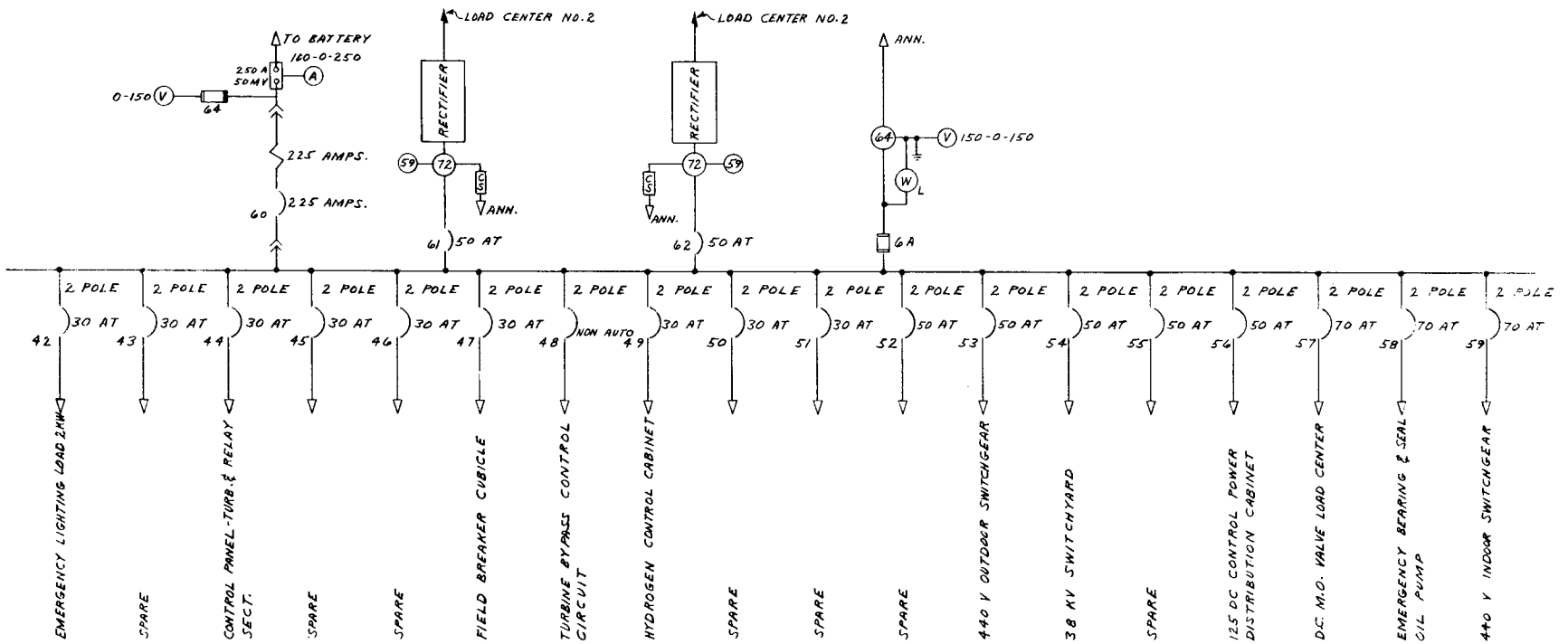

125 VOLTS DC - ONE LINE DIAGRAM

REFERENCE DWG. PRWRA 23-X 404 W REV. 6

Fig. 603-2 125 volt direct current one-line diagram.

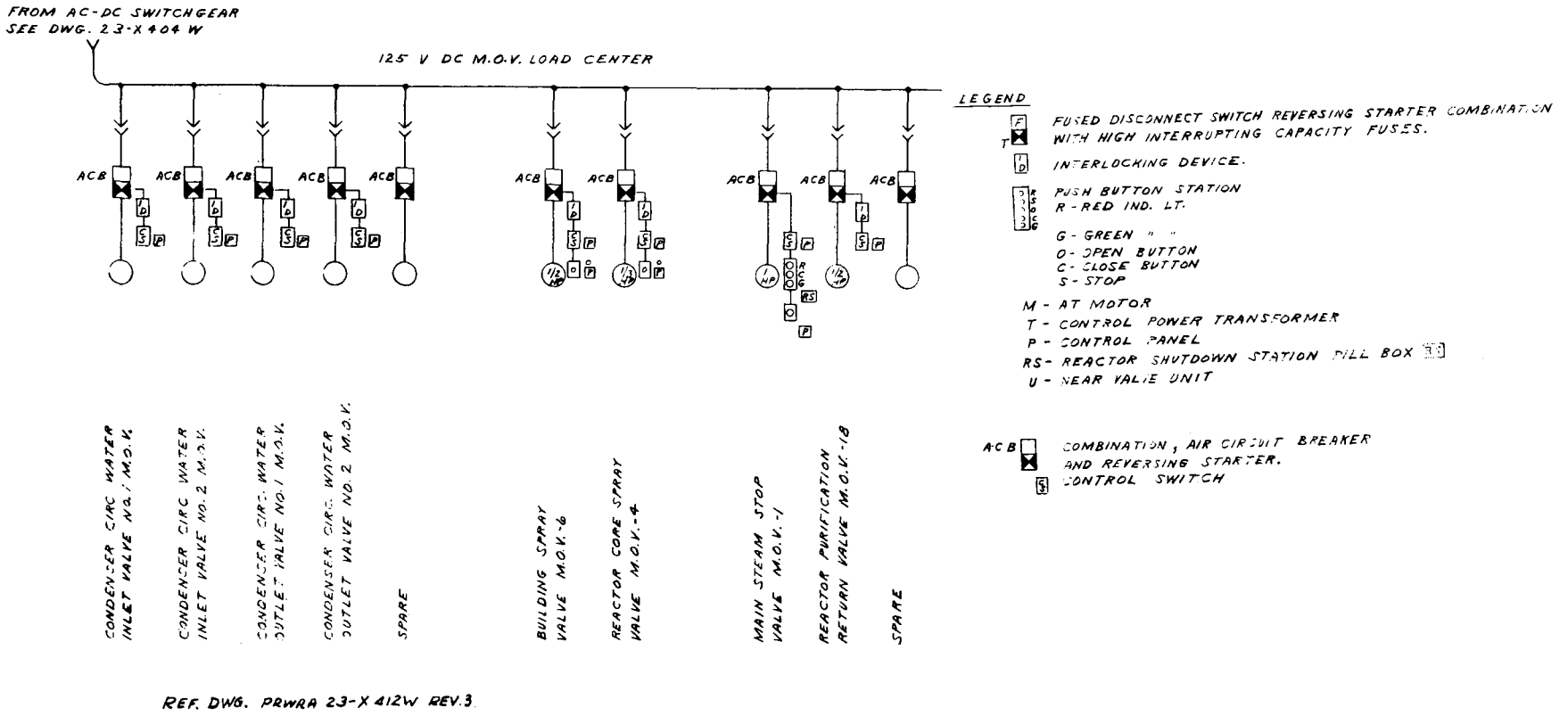

REF. DWG. PRWRA 23-X 412W REV. 3

Fig. 603-3 Single line diagram 125 volt direct current valve motor center.

700. STATION CONTROL

701. GENERAL

The BONUS Power Station operates as a constant load plant and delivers to the distribution line whatever power is generated by the superheated steam obtained from the reactor; the gross electrical output of the plant is 17,500 kilowatts and the net electrical output is 16,500 kilowatts. Control of station electrical power is therefore dependent on the control of the reactor power. A reactor pressure control system (section 503) is used to regulate the turbine admission valves such that the turbine-generator automatically accepts that amount of reactor steam which will hold the reactor pressure constant. In addition, nuclear and non-nuclear instrumentation systems discussed in detail in section 800 are provided to indicate, record, and/or control all functions necessary for safe operation of the plant.

702. CONTROL OF TURBINE GENERATOR UNIT

Single-line diagrams of the plant electrical control system are shown in Figs. 601-1 and 601-7. A simplified flow diagram is shown in Fig. 501-3. The output of the turbine-generator unit is controlled by positioning the turbine admission valves, which, in turn, regulate the flow of the superheated steam through the turbine.

During startup, the position of the turbine admission valves is controlled by means of the turbine synchronizing motor on the turbine governor. After synchronizing the generator to the 38-kv bus, the turbine admission valves are positioned by the reactor pressure control system (section 503), so that an increase or decrease in the reactor steaming rate will automatically position the turbine admission valves to maintain the reactor steam pressure constant within $\pm$ 5 psi at a preset value.

When controlling reactor steam pressure, the turbine admission valves are positioned by servo-positioning of the turbine governor synchronizing motor. By this means the turbine governor will respond at all times both to power system frequency and to reactor pressure. During a tie line transient, the turbine will initially respond to the speed governor, and then, as the reactor pressure changes, the effect of the speed governor will be overridden by the synchronizing motor, thus re-establishing the correct load for the new power system load-distribution conditions. Should the speed of the turbine generator unit exceed 10 per cent, the turbine trip valve is closed shutting off all steam to the turbine. A position switch on the turbine trip valve will scram the reactor the moment the valve leaves its wide-opened position.

703. REACTOR POWER CONTROL

A. General

Since no automatic electric power demand system is required for this plant, the reactor power is manually controlled by movement of the control rods. In a boiling water reactor with integral superheating, reactor power control requires that the power distribution as well as the absolute power level be controlled in order to maintain a constant superheated steam outlet temperature. To accomplish this, seventeen control rods are used; nine cruciform-type rods are located in the boiler region and eight slab-type rods are located between the boiler-superheater regions. (Refer to sections 305 and 307 for details of the control rods and their drives.)

Since the power distribution of the shimmed reactor core changes slightly with control rod positions, fuel burnup, and shim burnup, the ratio of power generated in the boiler region to the power generated in the superheater region (power split) will vary. Because of the location of the slab-type control rods, these rods have a greater effect on the power generated in the superheater fuel than on the power generated in the boiler fuel. Therefore, the slab-type rods are used to shim the superheater power to maintain the proper power split between the boiler region and the superheater region.

For the first core loading, the reactor core will be shimmed so that control of the reactor power can be maintained by movement of the control rods until a burnup of at least 2500 Mwd/ton is achieved. Details of the shim programming and typical control rod programming over the lifetime of the reactor may be found in section 309.

B. Typical Procedure for Changing Reactor Power

A typical procedure for changing power is explained below.

To raise reactor power, the operator moves the central control rod out of the core, therebyadding a small increment of reactivity. Power in the reactor will increase, and more steam voids will be generated in the core water. These steam voids have a negative reactivity feedback effect and will reduce the excess reactivity added by the rods to zero at a new power level. The increased steaming rate will cause the pressure in the reactor to rise and thus increase the flow of steam through the superheater region. Since the power in the superheater also increased, the exit temperature will initially rise slightly and then fall to an equilibrium value determined by the new superheater power. At constant reactor pressure, the steaming rate is directly proportional to the boiler power. Therefore, if the ratio of power generated in the boiler to that generated in the superheater remained constant, the exit superheated

steam temperature would reach an equilibrium temperature which would be the same temperature that existed prior to the power increase. For the case of adding reactivity by moving the central control rod, it is expected that a slight change in the power distribution of the core will occur and that the ratio of power in the boiler to that in the superheater will increase slightly. This condition will cause the exit superheated steam temperature to stabilize at a temperature slightly lower then the temperature which existed prior to the power change. To raise the temperature to its normal value than requires that the operator move the eight slab rods to readjust the power generated in the superheater fuel. Inserting the central control rod to decrease the power will have essentially the opposite effect; the exit superheated steam temperature will stabilize at a vlue slightly higher than the temperature which existed prior to the power change.

Rod programming and power split considerations may require that boiler power be changed by moving four of the control rods which are symetrically arranged about the central control rod. In this case the same procedure as outlined above shall be followed except that the four symetrically located control rods shall be moved one at a time maintaining all four rods in a banked position wherein no rod in the four deviates from the banked position by more than 2 inches. The 2 inch deviation requirement is used so that only a minor power distribution unbalance occurs.

C. Typical Reactor Power Operating Conditions

The boiler fuel region of the reactor operates at a nominal pressure of 950 psig and 540°F, and generates 37 Mw of thermal power; the superheater fuel region of the reactor generates 13 Mw of thermal power and operates with inlet saturated steam at 950 psig and 540°F and outlet superheated steam of approximately 875 psig and 900°F. Under the above operating conditions the control rods are positioned to obtain the correct power split and maintain a nominal superheated steam outlet temperature of 900°F.

Since it is not practicable to continuously shim the control rods to obtain a constant steam temperature of 900°F, the superheater fuel assemblies have been designed to safely accommodate 925°F and an external commercial attemperator spray control system is used to reduce the temperature to 900°F $\pm$ 10°F. This allows the operator to make small changes in power, with the superheated steam temperature allowed to vary 25°F, by adjusting only the central control rod. Under normal operating conditions, after increasing or decreasing the reactor power, the operator will scan the eight superheated steam outlet temperature indicators and observe the change in temperature in each of the eight superheater sections of the superheater region. If the temperature has varied more than 10°F from the 900°F nominal value, the operator can shim the slab control rod that is associated with the particular superheater section which is indicating an off-nominal temperature. Under steady-state conditions, the operator can always shim the superheater region to maintain a nominal 900°F exit temperature in each of the eight superheater section.

Protection of the superheater region against long-term transients and operator errors is provided by an alarm and scram system which is sensitive to the exit temperature of each of the eight superheater sections in the superheater region. At 20°F to 40°F above the normal exit temperature of 900°F, an alarm will be sounded indicating that a superheater section is not operating properly; at a preset temperature of between 925°F and 975°F a reactor scram will be initiated. During the initial operation of the reactor, a shutdown is initiated if the superheater control rods are withdrawn a preset amount and the steam flow through each assembly is less than 10% of full flow.

Because the exit superheated steam temperature for a given saturated steam flow condition represents the power in that particular section of the superheater region, the flow and temperature in each of the eight superheater sections are measured and indicated on the main control panel. This gives the reactor operator a good indication of the power distribution in the reactor core. To obtain a better representation of the power distribution in the reactor, one of the eight superheater sections has been designed such that the steam from each of the four fuel assemblies in the section is brought out through a separate line. The steam from each assembly is then monitored for flow and temperature. In this manner, the average power distribution in the superheater section is easily monitored, assuming that a symmetrical flux distribution exists in the reactor when a symmetrical rod pattern exists. Unbalances due to fuel burnup and rod positions will be detected as average temperature changes in the eight superheater lines, and corrective control rod adjustment in the proper area of the core can be initiated.

704. REACTOR INTERLOCK AND REACTOR SHUTDOWN SYSTEM

A. General

The safe operation of any reactor plant is dependent upon the interlock and reactor shutdown systems. These systems are designed primarily on the basis of obtaining continuity of electric power service without impairing reactor safety. Reactor startup and control-rod withdrawal prohibit-interlocks are provided in the safety system to prevent startup if an unsafe condition should exist. In addition to the conventional boiling-water reactor interlocks, the BONUS plant must protect the integral superheater fuel assemblies from overheating, prevent high steam flow which will cause a high differential pressure across the superheater fuel assemblies, and limit reactivity changes due to expulsion of water from the superheaters during startup. The primary mechanism used to protect the reactor against the above occurrences is the reactor shutdown system.

Reactor shutdown is normally accomplished by insertion of all control rods. This can be accomplished slowly by operator insertion or rapidly by a scram condition. A complete scram shutdown will cause the following conditions to occur:

1) All control-rod magnetic clutches are deenergized.
2) All control rods fall into the core under gravity acceleration followed by automatic motor drive-in of any control rod that fails to fully scram.
3) The minimum flow bypass valve opens automatically to 100 per cent open position to assure steam flow through the superheaters; the valve closes automatically to a preset stop within a predetermined time.
4) The turbine-generator unit is tripped out by closing the turbine trip and admission valves and the generator breaker is opened.
5) Reactor pressure is placed under main steam bypass valve control.

If an abnormal coolant flow condition occurs after a normal scram shutdown, cooling with the emergency condenser will be initiated automatically to allow condensing of 4.2% of rated power; at 900°F the quantity of steam condensed is 7850 lb/hr. The abnormal conditions under which this action would occur are:

1) Main steam stop valve - not full open.
2) Minimum flow valve, or turbine bypass valve, or turbine admission valve and turbine trip valve, not open.
3) Main condenser vacuum low.
4) Loss of station auxiliary power.

B. Interlock and Scram System

Since energizing of the control-rod drive magnetic clutches is prevented until all shutdown conditions are cleared or bypassed, the startup interlocks provide the operator with an instantaneous check of the reactor safety system.

Because reactor startup is the most critical time during reactor operation and is when the greatest number of scrams occur, a rod withdrawal prohibit circuit has been added to the control and safety system. The prohibit circuit is designed to reduce the number of startup scrams by preventing rod withdrawal until the unsafe condition is cleared, thus reducing the startup time wasted because of a shutdown that may have been prevented.

1. Startup and Control Rod Withdrawal Interlocks

Startup of the reactor, and control-rod withdrawal, is prevented by an interlock system which uses solid-state logic elements. The interlock signals are fed to a seven (7) input logic element, the output of which goes to a rod-withdrawal prohibit controller and the station annunciator. A block diagram of the system is shown on Fig. 704-1.

The seven logic inputs which must be satisfied prior to startup are given below along with the conditions each represents. Inputs No. 1 and No. 2 basically prevent startup; the rest of the inputs are control-rod withdrawal prohibit inputs.

Input No. 1

Reactor scram circuit is cleared of all scram signals.
Startup circuit is energized by closure of the key switch.

Input No. 2

All control rods are in the full-in position.
The micromicroammeter range switch is in the lowest range position.
A minimum count rate is being detected by Nuclear Channels 1 and 2.

After logic inputs No. 1 and No. 2 are satisfied, a relay is latched which maintains the above logic until a shutdown occurs.

Input No. 3

Reactor period is longer than 20 sec as measured by Intermediate Range Channels 3 and 4. This interlock is bypassed by a key switch when boiling noise interferes with reliable measurement.

Input No. 4

Reactor power is less than 102 — 108 per cent of set point as measured by the Intermediate Range Channels 3 and 4.

Input No. 5

Indicated power is greater than 5 per cent of selected range as measured by the micromicroammeter channels 5 and 6, except when switch is in lowest range position.

Input No. 6

Indicated power is less than 102 — 108 per cent of selected range as measured by the micromicroammeter channels 5 and 6.

Input No. 7

Freight door is closed.
One of the two entrance air lock doors is closed.
One of the two emergency air lock doors is closed.

2. Reactor Scram System

In addition to the negative reactivity feedback due to void formation, the reactor is also protected by a scram system which automatically shuts the reactor down by deenergizing the magnetic clutch on the control-rod drives.

Nine redundant logic elements accept an electronic trip signal or a contacts-opening-type signal for scram initiation. The arrangement of logic inputs is shown on Fig. 704-2. All logic elements are identical and are arranged for a 1-out-of-4 or a 2-out-of-4 coincidence trip. It is also possible to arrange the logic modules for a 2-out-of-4 coincidence.

For reasons of fail-safe design, a safe or normal input to any logic element is a d-c signal of approximately -15 volts magnitude. An unsafe or scram input is approximately zero volts.

The circuit selector module (Fig. 704-2) is a nine input or gate which prevents interaction between the other nine logic elements. It also separates the scram signals to permit scramming of either boiler rods, superheater rods, or all rods.

The magnet current switches are essentially 1-kc oscillators which provide ON pulses to the Silicon Controlled Rectifier Power Supplies. As long as all scram inputs are in a "safe" condition, the oscillators will put out triggering pulses to the magnet current power supplies and the silicon controlled rectifiers will conduct. Any scram signal will turn off the oscillator which prevents the silicon controlled rectifiers from conducting and deenergizes the rod clutch magnets. The magnet current switches and the silicon controlled rectifiers are provided in parallel redundancy to permit "on line" testing and to provide back-up in the event one fails.

Shutdown is initiated, or startup is prevented, by any one or any two of the following scram conditions depending on the final logic setup:

1) Reactor period shorter than -15 sec as seen by either Log N - Period amplifier in the (2 channels) intermediate range. Period measurements in the source range are erratic, and it is difficult to differentiate between instrument noise and period measurement; therefore, the BONUS plant uses the more stable period signal from the intermediate range (Log N-period) instruments for the period shutdown signal. The period signal will be bypassed when boiling in the reactor becomes violent, and period information becomes unreliable.
2) High power level as indicated in the micromicroammeter channels. The micromicroammeter channels (2 channels) are set to shut down the reactor at a power level of 110 per cent of any selected range. The micromicroammeter channels form part of the reactor safety system along with the safety trip amplifiers for a 1-out-of-4 or a 2-out-of-4 coincidence system.
3) The safety trip amplifiers (2 channels) form a part of the coincidence system to trip when the reactor power exceeds 110 per cent of operating power level.
4) Building exhaust air activity high as detected in either the air particulate monitoring system, the gaseous monitor at the base of the stack, or the gamma radiation probe monitoring the air discharge to the stack. Secondary actions initiated by this condition are: closure of ventilation valves, gland seal diversion valve, stack isolation valve, and to open the vapor sphere admission valve.
5) Reactor steam pressure high — greater than 975 psig.
6) Reactor steam pressure low — less than 775 psig.*
7) Reactor water level as indicated by the outside water column high — more than 1 foot above the normal operating level.*
8) Reactor water level low — more than 1 foot below the normal operating level.*
9) Reactor main steam flow greater than 200,000 lb/hr.
10) Differential pressure across superheater greater than 90 psig.
11) Manual shutdown buttons located in the Control Room and Pillbox.
12) Seismic shock detected by two shock switches, one located on the wall of the reactor building, and one on the wall of the biological shield. The shock switches are set for a shock intensity corresponding to number seven on the Mercalli scale.

---

* To be bypassed by a common switch to permit low-pressure tests and removal of control-rod drives when reactor is shut down.

13) Condenser vacuum low, less than 20 in. of Mercury.* Shutdown signal to be bypassed during startup.
14) Reactor circulation water temperature less than preset value 500°F. Temperature switches are located in each of the two water-circulation loops.*
15) Loss of main power supply to auxiliaries.
16) Superheated-steam temperature greater than preset value 925°F — 975°F. Shutdown signal initiated by 11 temperature switches located in each superheater assembly.
17) Main steam stop valve not fully open.
18) Turbine admission valve or turbine trip valve closed and turbine bypass valves closed to a preset flow rate.*
19) Feedwater pressure less than 1000 psig.
20) Reactor circulation water flow less than 70 per cent of normal. Shutdown signal initiated by two pressure switches mounted in the two water-circulation lines.*
21) Reactor safety valves not fully closed - three safety valves set to open at (1050)(1100)(1150) psig.

During initial reactor operation the following shutdown signals are included in the safety circuits, but may be removed at a later date:

1) Reactor relief valve (PCV-10) not fully closed - relief valve set to open at 975 psig.
2) Turbine solenoid trip valve not fully open.* (Bypassed during startup).
3) Turbine admission valve closed.* (Bypassed during startup).
4) Any superheater control rod not fully inserted, and main steam flow below 10 per cent of full flow.
5) Reactor steam pressure rate of change greater than 2 psi per sec.

---

* To be bypassed by a common switch to permit low-pressure tests and removal of control-rod drives when reactor is shut down.

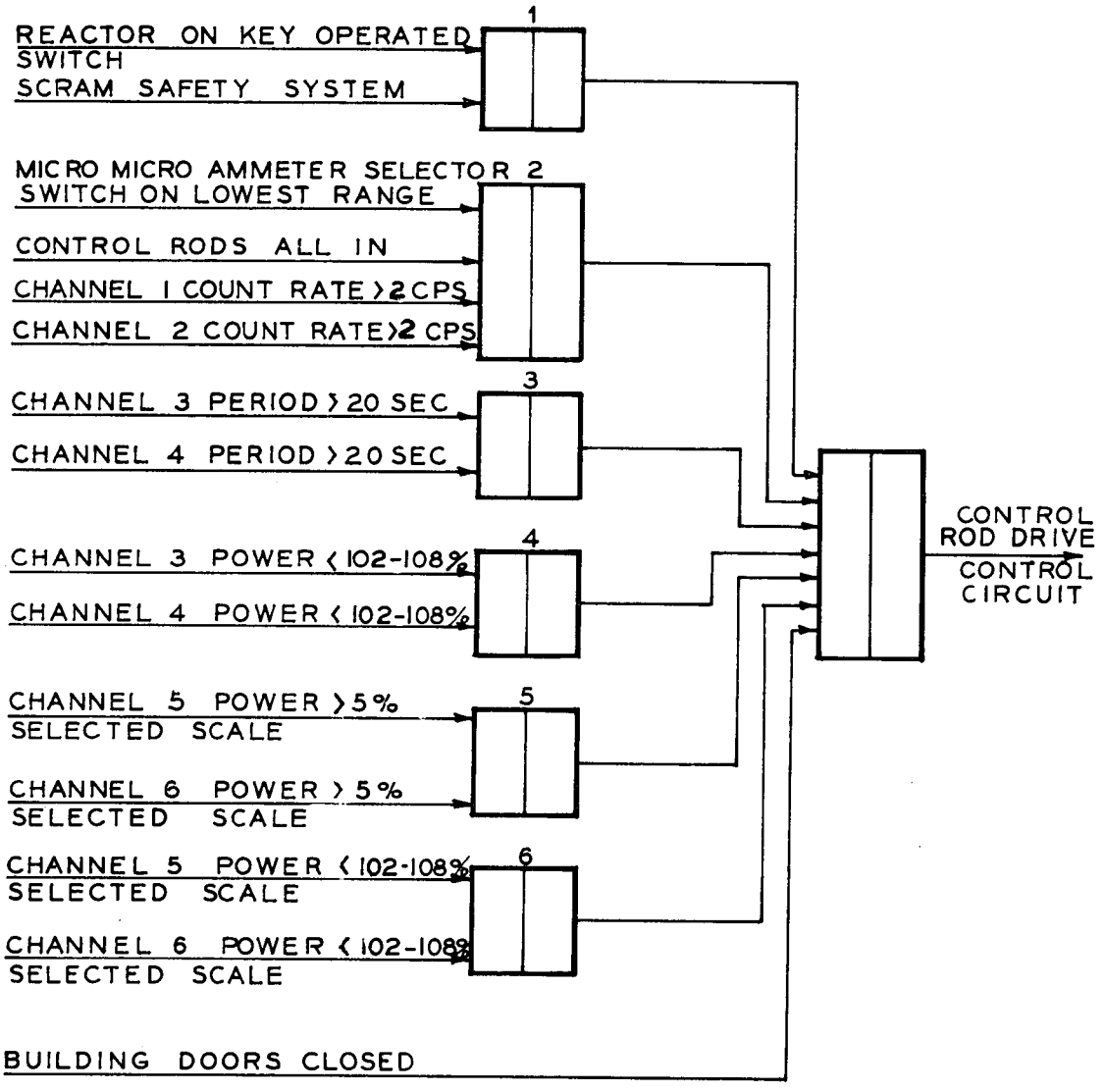

Fig. 704-1 Block diagram of startup and control-rod withdrawal interlock system.

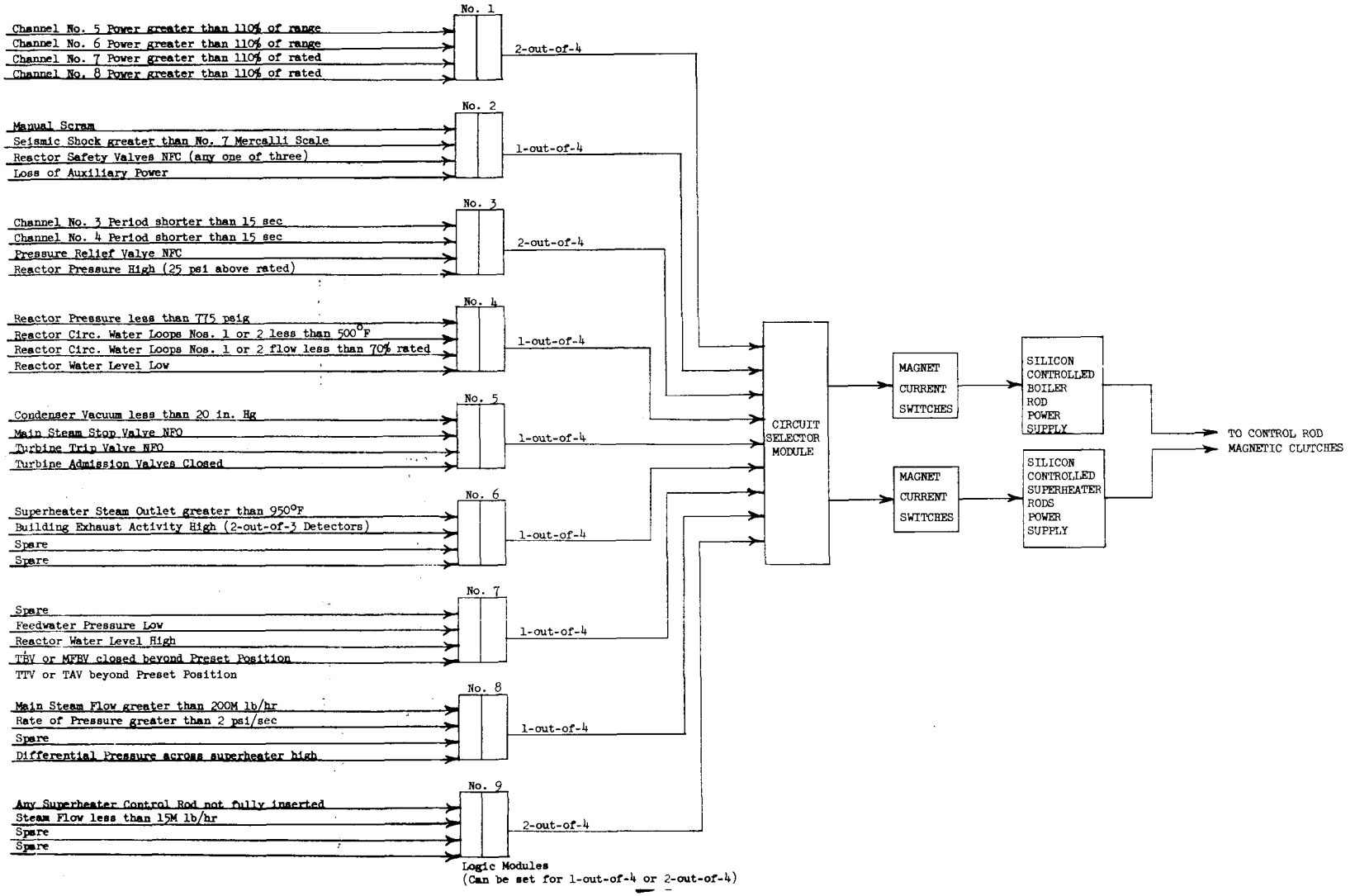

Fig. 704-2 Block diagram of reactor safety logic system.

800. INSTRUMENTATION

801. GENERAL

The nuclear and non-nuclear instrumentation systems provided in this plant are used to indicate, record, and/or control all functions necessary for the safe operation of the plant. Abnormal operating conditions are detected by these instruments, thus enabling action to be initiated to prevent or terminate any hazardous or potentially hazardous conditions. Interlocks, alarms, and automatic shutdowns which are associated with the nuclear and non-nuclear instruments are described in section 704.

802. REACTOR NUCLEAR INSTRUMENTATION

A. Reactor Monitoring System

The approach to criticality during startup requires that the reactor power from source strength to greater than full operating power, be measured. The power output of the reactor is proportional to the neutrons produced; hence, nuclear measurement of this power is used because of the fast response of nuclear instruments to power level changes.

For the safe operation of the reactor during startup, a neutron-flux level which can be detected by the neutron counter chain must be established. The detectors are located in thimbles which penetrate tangentially through the biological shield and through the neutron shield tank. As shown in Fig. 802-1, the detectors are located tangent to the reactor core in the thimble area which is surrounded by water; the water in this zone thermalizes the fast neutrons leaking out of the reactor. The thermal neutrons which also leak out from the reactor make only a minor contribution to the detection.

With the reactor shut down (540°F, clean) by approximately 5% $\Delta k/k$, the total source strength required to provide 0.5 neutrons/cm^2/sec at the counter is approximately 3×10^8 neutrons/sec. This source strength is sufficient for the counter, which has a sensitivity of 4.5 cps/nv, to register a minimum of 2 counts/sec.

The BONUS reactor uses an antimony-beryllium (Sb-Be) source consisting of eighteen (18) 1/2-in.-OD x 2-9/16-in.-long antimony rods having a total activity of 1060 curies and contained within a 1-in.-OD tube of beryllium. The source is canned in stainless steel and is located in the boiler section of the core.

The complete nuclear instrumentation system includes two Source Range Channels, two Intermediate Range Channels, two Micromicroammeter Channels, two Power Range Safety Channels, two Galvanometer Channels, and a Reactor Safety System. All circuitry is designed to be fail-safe and to use solid-state devices. Instrumentation components are of plug-in modular construction for easy servicing; controls and indicating lights are located on the front of the panel; test/calibrate signals are provided for each monitoring channel; detector power supply voltage, reactor power level, period information are displayed on front-of-panel meters; channel comparators and channel off-normal warning lights are located on the front of each panel.

A graphical summary of the nuclear instrumentation system including their operating ranges is shown on Fig. 802-2; a description of each of the channels is given below.

1. Source Range Channels 1 and 2 (Operating Range 10^{-9} to 10^{-4} of Normal Power)

Two identical channels are used to measure the source range of 10^{-9} to 10^{-4} of normal power in the reactor. Each channel uses a BF_3 proportional counter to detect thermal neutrons in the 2.5×10^{-1} to 2.5×10^{4} neutrons/cm^2/second range and produce an output consisting of negative current pulses that are proportional to the neutron multiplication rate of the reactor. The counters are enclosed in 1-in.-thick lead jackets to prevent chamber damage due to high gamma background.

An all-solid-state pulse pre-amplifier is used to drive the 250 ft of RG-150/U armored signal cable between the counter and the count rate meter located in the control room. The pre-amplifier is located in a panel on the wall of the reactor biological shield near the instrument thimbles. The output pulse from a BF_3 counter is approximately 10 mv. With a pre-amplifier voltage gain of 10, the pulse delivered to the count rate meter will be about 100 mv, which is well above the maximum expected induced noise levels.

The output of the pre-amplifier is fed into the Log Count Rate amplifier whose output is fed into the rod withdrawal prohibit circuit, into a scaler, and into a period amplifier. The range of the count rate meter is from 1 to 10^5 counts/sec with an adjustable low count rate trip to prevent rod withdrawal unless a count rate greater than a predetermined and set count rate ($\sim$2 counts/sec) is detected in both channels. The low count rate interlock is bypassed at a higher power level. Since the output of the count rate meter is linear, only two internal calibration frequencies, 120 counts/sec and 5×10^4 counts/sec, are required. The auctioneered output from the count rate meters are displayed on the console section of the main control panel. A 2-volt, 1-μsec pulse from the discriminator is fed into a scaler whose output is displayed on a digital register. This same signal is applied to an audible "popper" in the control room and to a "popper" on top of the reactor biological shield. The signal from the count rate meter is differentiated in the period amplifier, and the auctioneered period outputs of the two channels are indicated and recorded.

The output from each log count rate meter is also connected to a comparator circuit, and an alarm is activated if the two signals deviate from one another by a preset amount.

A schematic diagram of the source range channel instrumentation is shown on Fig. 802-3.

2. Intermediate Range Channels 3 and 4 (Operating Range 10^{-6} to 1.5 Normal Power)

Two identical channels are used to furnish logarithmic neutron flux and period measurement in the intermediate range of the reactor power operation. Electrically-gamma-compensated ion chambers with a

sensitivity of 4×10^{-14} amp/neutron/cm^2/sec are used to detect the thermal neutrons in the range of 2.5×10^2 to 2.5×10^{10} neutrons/cm^2/sec. High-voltage power supplies furnish both positive and negative voltages for each ion chamber. Ion current is amplified by the log N-Period amplifier over a range from 10^{-10} to 5×10^{-4} amp with the period range from -30 to infinity to +3 sec.

The log N output from each channel is connected to an auctioneering circuit, an output comparator and a channel off-normal circuit. The auctioneering circuit selects the highest flux signal from the two log N amplifiers for recording on a strip chart recorder. The comparator circuit compares the output of the two log N amplifiers, and activates an alarm if the two signals deviate from one another by a preset value. The channel off-normal monitor continuously monitors the operation of each amplifier, and activates an alarm if the output deviates from normal preset limits. A trip signal from either log-N amplifier will prevent rod withdrawal if the power level exceeds a preset value.

The auctioneered period signal from the log N-period amplifier is indicated and recorded on the same indicator and recorder as used by channels 1 and 2. Both the indicator and recorder signals are switched automatically from the source channels to the intermediate channels as the power increases beyond the effective range of the source channels and are automatically switched back to the source channels as the power decreases.

The period amplifier is provided with electronic trip circuits to prevent rod withdrawal and annunciate if the reactor period is shorter than 20 sec; the trip circuits scram the reactor, and annunciate if the period is shorter than 15 sec. These trip circuits are bypassed by a key-operated bypass switch when boiling noise interferes with reliable period measurements.

A schematic diagram of the intermediate-range channel instrumentation is shown on Fig. 802-4.

3. Micromicroammeter Channels 5 and 6 (Operating Range 10^{-5} to 1.5 Normal Power)

Two identical channels are used to monitor neutron flux in the intermediate and the power level ranges from 5×10^{-5} to 1.5 of normal power. Because of the wide operating range of the micromicroammeters they are used to control the rate of power increase through the intermediate and power ranges. The primary detector in each channel is an electrically-gamma-compensated ion chamber. A common chassis is used to house the high and low voltage power supplies, the linear amplifiers with a common range change switch, and electronic and relay trip outputs.

The micromicroammeter is a current measuring device specially designed for the detection and measurement of low-level currents from ion chambers. Selection of the operating range of the micromicroammeter

is made by a remote range change selector switch, common to both micro-microammeters, and located on the console section of the main control panel; thirteen current range selections are available to cover the current range from 10^{-10} to 10^{-4} amp. Control-rod withdrawal is prevented by these channels by actuation of the relay trip unless 1) the selector switch is in its lowest range (initially), 2) reactor power is greater than 5 per cent of the selected range, and 3) reactor power is less than preset value between 102—108 per cent of the selected range. An electronic scram trip is initiated whenever the power level reaches 110 per cent of the selected range. This scram trip circuit is combined with the Power Range Safety Channels trip circuits to form a 1-out-of-4 or a 2-out-of-4 coincidence trip circuit to scram the reactor when the power exceeds the preset levels.

The output signals from the micromicroammeter channels are compared and indicated on an off-normal indicator; this provides a system for detecting abnormal operation of either instrument channel or gross unbalance of reactor flux.

A schematic diagram of the instrumentation system is shown in Fig. 802-5.

4. Power Range Safety Channels 7 and 8 (Operating Range 1 to 150 Per Cent Normal Power

The power range channels consist of two identical safety trip amplifiers to detect and measure reactor power level from 1 (5×10^6 neutrons/cm^2/sec) to 150 per cent (10^9 neutrons/cm^2/sec) of full operating power.

As indicated in Fig. 802-6, the power range includes two uncompensated ionization chambers, two linear current amplifiers, a channel comparator, an off-normal monitor, an auctioneered output, and electronic trips for pre-scram alarms and for initiating a scram.

The linear-current amplifier measures the current from the uncompensated ion chambers over the range of 0 to 1.5×10^{-3} amp. Adjustable electronic scram trips are combined with the scram trip outputs of the micromicroammeters to form a 1-out-of-4 or a 2-out-of-4 coincidence logic scram trip circuit when the detected power is 110 per cent or greater. A comparator circuit compares the output of the two channels, and activates an alarm if the two signals deviate from one another by a preset amount. The channel off-normal monitor continuously monitors the operation of the amplifiers, and activates an alarm if the output deviates from normal preset limits. The auctioneered output is indicated and recorded on a strip chart recorder.

5. Galvanometer Channels 9 and 10 (Operating Range 10^{-4} to 2×10^0 of Normal Power)

Supplementing channels 3 through 8 are two self-powered dual-light-beam galvanometers for indicating reactor power independent of

station auxiliary power or amplifier failures. The instruments cover a reactor power range of 10^{-2} to 200 per cent of full power, corresponding to a signal current range of 5×10^{-10} to 1×10^{-5} amp.

Each channel utilizes an uncompensated ion chamber as the primary detector and a 300-volt battery power supply.

The dual-light-beam galvanometers are the taut-suspension, moving-coil reflecting galvanometers with built-in lamps and scales. One light-beam spot indicates total current, and the other, deviation from a balance (zero center).

One galvanometer system is located on the console section of the main control panel and the other is located in the pillbox. The output from either ion chamber can be measured by the pillbox galvanometer or the control room galvanometer through a patch cord arrangement in the pillbox, as shown on Fig. 802-7.

6. Reactor Safety System

The reactor safety system discussed in detail in section 704 serves to monitor the condition of various electronic trip circuits, contacts, and manually-operated switches to effect reactor scram, prevent reactor startup, or prevent control-rod withdrawal if a set of safety conditions are not met.

The nuclear instrumentation trip circuits are fed to four of the eighteen logic modules which make up the reactor safety logic system. Eight electronic scram signals are transmitted to two sets of two parallel-operated logic modules. These modules are identical circuitry and are capable of being connected to provide a one-out-of-four or a two-out-of-four coincidence signal for initiation of a reactor scram; dual redundancy is used to protect the system against module failure and to permit the removal of a module for maintenance without scramming the reactor.

To achieve a fail-safe design, a safe or normal input to any logic element is a d-c signal of approximately -15 volts. An unsafe or scram input is the step-change of the d-c signal to approximately zero volts.

B. Reactor Monitoring Instrument Specifications

The general specifications for the nuclear instruments used in the reactor monitoring system are listed in Table 802-1, Reactor Nuclear Instrumentation, Specification Sheets NI-1 through NI-16. These specification sheet numbers are shown on the Instrumentation block diagrams of Figs. 802-3 through 802-7 for easy reference.

Table 802-1 REACTOR NUCLEAR INSTRUMENTATION

SPECIFICATION SHEETS NI-1 THROUGH NI-16

Specification Sheet No.	Applicable Channel	Instrument Title
NI-1	1,2	BF_3 Proportional Counter
NI-2	3,4,5,6	Compensated Ion Chamber
NI-3	7,8,9,10	Uncompensated Ion Chamber
NI-4	1,2	High Voltage Power Supply for BF_3 Proportional Counters
NI-5	3,4,5,6	High Voltage Power Supply for Compensated Ion Chamber
NI-6	7,8	High Voltage Power Supply for Uncompensated Ion Chamber
NI-7	1,2	Linear Preamplifier
NI-8	1,2	Scaler
NI-9	1,2	Log-Count-Rate-Amplifier with Period
NI-10	3,4	Log N Amplifier with Period
NI-11	7,8	Trip Amplifier
NI-12	5,6	Micromicroammeter
NI-13	9,10	Dual-Element Galvanometer with Shunts and Adjusting Devices
NI-14	3,4,7,8	Strip Chart Recorder (7")
NI-15	1,2,3,4,5,6	Strip Chart Recorder (4")
NI-16	1,2,3,4,5,6	Indicating Meter

REACTOR NUCLEAR INSTRUMENT SPECIFICATION NI-1

Equipment Title: BF_3 Proportional Counter

Quantity: Two

Accessories: Each counter is equipped with a one-inch-thick lead jacket to shield the counter from the high gamma background.

Function: Detect thermal neutrons at source level; provide current pulses over a range of 10^0 - 10^5 counts/sec to Log-Count-Ratemeter and Period Amplifier.

Ambient Conditions: Thermal-neutron flux range during counter operation:

0.5×10^0 to 5.0×10^3 $n/cm^2/sec$

Full-power thermal-neutron flux while counter is off (counter voltage removed, electrodes shunted by approximately 1.5 megohm resistor):

10^9 $n/cm^2/sec$

Maximum Temperature: 175^oF

Specifications

Mechanical

Maximum Diameter:	1-1/32 in.
Maximum Over-all Length:	12 in.
Approximate Sensitive Length:	8-5/8 in.
Net Weight:	6 oz
Shipping Weight:	3 lb

Materials

Body:	Aluminum
Center Electrode:	0.001-in.-dia. tungsten
Insulation:	Ceramic
Gas Filling:	BF_3 enriched 96% B-10

Maximum Ratings

Absolute Maximum Valves	
Voltage Between Electrodes:	2500 volts max.
Operating	
Thermal-Neutron Flux:	2.5×10^4 nv max.
Non-Operating	
Thermal-Neutron Flux:	4.0×10^9 nv max.
Gamma Flux:	10^4 r/hr max.

Typical Operating Characteristics

Voltage Between Electrodes (Approx.):	2000 volts
Neutron-Flux Range:	2.5×10^{-1} to 2.5×10^4 nv
Multiplication Factor:	500
Sensitivity:	4.5 counts/n/cm^2
Plateau Length:	Minimum of 200 volts with over-all slope of 4% or less
Output Pulse:	Minimum of 10^{-3} volts with inherent rise time of less than 5×10^{-8} sec

REACTOR NUCLEAR INSTRUMENT SPECIFICATION NI-2

Equipment Title Compensated Ionization Chamber

Quantity Four

Function Used in the intermediate-range and power-range channels to detect thermal neutrons; total range of 10^{-4} to 1.5 x 10^{2} per cent full power.

Ambient Conditions
Thermal-Neutron Flux at 100 per cent Full Power: 5 x 10^{8} $n/cm^2/sec$
Maximum Gamma Dose at Lowest Neutron Level: 5.6 x 10^{4} r/hr
Maximum Gamma Dose at Highest Neutron Level: 10^{6} r/hr
Maximum Temperature: 175°F
Maximum Relative Humidity: 95%

Specifications

Mechanical

Maximum Diameter:	3-3/16 in.
Maximum Over-all Length:	24 in.
Approx. Sensitive Length:	14-1/16 in.
Net Weight:	5-3/8 lb
Shipping Weight:	19 lb

Materials

Body:	Alloy 3% Al, 97% Mg
Insulation:	Ceramic
Gas Filling:	Nitrogen
Neutron-Sensitive Material:	Boron enriched to 96% with B-10 1 mg/cm^2 thick

Maximum Ratings

Absolute Maximum Values	
Thermal-Neutron Flux:	10^{11} max. $n/cm^2/sec$
Interelectrode Voltage (dc):	1500 max. volts

Typical Operating Characteristics

Approx. Operating Voltage:	300 to 800 volts
Compensating Voltage:	-10 to -80 volts
Neutron Sensitivity:	4 x 10^{-14} $Amp/n/cm^2/sec$
Thermal-Neutron Flux Range:	2.5 x 10^{2} to 2.5 x 10^{10} $n/cm^2/sec$
Approx. Signal Electrode Output Impedance	
Capacity:	160 uuf
Leakage Resistance:	10^{14} min. ohms

Typical Saturation Characteristics

For Neutron Flux of 2.5 x 10^{10} $neutrons/cm^2/sec$	
Operating Voltage:	800 volts
Output Current:	10^{-3} amperes
For Neutron Flux of 2.5 x 10^{9} $neutrons/cm^2/sec$	
Operating Voltage:	300 volts
Output Current:	2 x 10^{-4} amperes

REACTOR NUCLEAR INSTRUMENT SPECIFICATION NI-3

Equipment Title Uncompensated Ionization Chamber

Quantity Four

Function Used to detect thermal neutrons in power range of 200% full power.

Ambient Conditions

Thermal-Neutron Flux Range:
5×10^6 to 7.5×10^9 $n/cm^2/sec$ (approx)
During Operation:
Average Neutron Flux: 5×10^8 $n/cm^2/sec$
Maximum Temperature: 175°F
Maximum Relative Humidity: 95%

Specifications

Mechanical	
Maximum Diameter:	3 in.
Maximum Over-all Length:	13-7/8 in.
Approx. Sensitive Length:	7-1/2 in.
Net Weight:	2-1/2 lb
Materials	
Body:	Aluminum
Insulation:	Ceramic
Gas Filling:	Argon-Nitrogen Mixture at 76 cm Hg
Neutron-Sensitive Material:	Boron enriched to 96% in B-10
Maximum Ratings	
Absolute Maximum Values	
Interelectrode Voltage:	1500 max. volts
Thermal-Neutron Flux:	1.0×10^{11} max. $n/cm^2/sec$
Typical Operating Characteristics	
Operating Voltage:	200 to 800 volts
Thermal-Neutron Flux:	2.5×10^4 to 2.5×10^{10} $n/cm^2/sec$
Neutron Sensitivity:	4.5×10^{-14} amp/n/cm²/ sec
Gamma Sensitivity:	5×10^{-11} amp/R/hr
Leakage Current:	$\frac{\text{(Signal Current) x (Meter Resistance)}}{10^{11}}$
Typical Saturation Characteristics	
For Neutron Flux of 3×10^9 $n/cm^2/sec$	
Operating Voltage:	250 min. volts
Output Current:	1.3×10^{-4} amp
For Neutron Flux of 1.5×10^{10} $n/cm^2/sec$	
Operating Voltage:	600 min. volts
Output Current:	6.6×10^{-4} amp

REACTOR NUCLEAR INSTRUMENT SPECIFICATION NI-4

Equipment Title	High-Voltage Power Supply for BF_3 Proportional Counters
Quantity	Two
Function	Used in source-range channels to provide accelerating potential between electrodes in each of the BF_3 counters; operated only while reactor power is in source range (1×10^{-7} to 5×10^{-2} per cent full power)
Ambient Conditions	Temperature Range: 65-80°F (normal) Maximum Relative Humidity: 95% max. 110°F (max. intermittent)

Specifications

Outputs: 600 to 2000 VDC continuously adjustable, 0 to 200 microamperes to load. 1 milliamp will not cause damage.

Regulation: ± 2 per cent of output voltage

Ripple: Less than 0.1 per cent

Stability: 1 per cent per week

Power supplies are equipped with voltage indicating meters, low-voltage alarms and indicating lights.

REACTOR NUCLEAR INSTRUMENT SPECIFICATION NI-5

Equipment Title: High-Voltage Power Supply for Compensated Ionization Chamber.

Quantity: Four

Function: Used in the intermediate-range and power-range channels to provide negative and positive voltages to the compensated ionization chamber.

Ambient Conditions:
Temperature Range: 65 to 80°F (normal); 110°F (max. intermittent)
Relative Humidity: 95% (max.)

Specifications

Input Power:	208 v ± 10%; 60 cps; single-phase
Positive Voltage Range:	300 to 700 VDC
Negative Voltage Range:	0 - 100v; continuously variable
Current Output:	0 to 1 ma.
Stability:	1 per cent per week
Ripple:	Less than 0.1 per cent
Regulation:	Plus or minus 0.5 per cent over specified line and load variations.

Power supplies are equipped with voltage indicating meters, low-voltage alarms and indicating lights.

REACTOR NUCLEAR INSTRUMENT SPECIFICATION NI-6

Equipment Title High-Voltage Power Supply for Uncompensated Ionization Chamber

Quantity Two

Function Used to provide a positive voltage to the uncompensated ion chamber 24 hours a day while the reactor is in operation.

Ambient Conditions

Temperature Range: 65 to 80°F (normal); 110°F (max. intermittent)

Relative Humidity: 95% max.

Specifications

Power:	208 v ± 10%, 60 cps, single-phase
Positive Voltage Range:	200 - 800 VDC (continuously variable)
Ripple:	Less than 0.1 per cent
Stability:	1 per cent per week
Regulation:	Plus or minus 0.5 per cent over specified line and load variation

Power supplies are equipped with voltage indicating meters, low-voltage alarms and indicating lights.

REACTOR NUCLEAR INSTRUMENT SPECIFICATION NI-7

Equipment Title Linear Preamplifier

Quantity Two

Function To provide additional filtering and amplification of the BF_3 counter signal to the level where detector, connector, or cable noise does not interfere with the neutron signal.

Ambient Conditions

Temperature: 80 to 120°F (normal); 175°F (max. intermittent)
Relative Humidity: 80 to 90% (normal); 95% (intermittent)
Radiation Exposure: 10 mr/hr (gamma)

Specifications

Input Characteristics:

Pulses from BF_3 counter.
Input impedance: 2000 ohms.
Sensitivity: 1×10^{-13} coulombs or 0.6 mv into 2000-ohm load. Equivalent to 0.02 mv into 75-ohm load.

Output Characteristics:

Pulse sufficient to drive the Startup Channel.
Pulse rise time: 0.05 microseconds.

Operating Characteristics:

Circuit configuration: a double feedback amplifier followed by an emitter follower.
Voltage gain: adjustable up to 10.
D.C. power for the pre-amplifier is sent down the signal cable from the Startup Channel or Pulse-Counting Channel.
High voltage for the counter tube is supplied via a separate cable.

REACTOR NUCLEAR INSTRUMENT SPECIFICATION NI-8

Equipment Title Scaler

Quantity Two

Function Used in source-range channels to provide accurate counting rate from BF_3 counter circuit.

Ambient Conditions

Temperature:	65 to 80°F (normal); 110°F (max. intermittent)
Relative Humidity:	95% max.

Specifications

Input Signal:	3 to 100 volt positive pulse, 1.0 to 1.5 μsec rise time, 5 μsec minimum dead time.
Input Power:	208 volt ± 10%; 60 cps; single-phase
Maximum Counting Rate:	100,000 counts/sec
Total Capacity:	10^8 counts
Automatic Pre-set Timer:	0 to 60 min; reading to the second
Preset Count:	Adjustable
Mechanical Register:	4 digit
Circuitry:	All solid state
Input Sensitivity:	10 mv
Test Circuit	3600 counts/sec
Printer Readout:	Available
Audible Register:	Available
Resolving Time:	1 μsec

Scaler shall be provided with the following:

- Variable pulse height discriminator
- Standard panel insert size (19 in.)
- Provision for stopping count at any time regardless of pre-set time interval
- Count re-set to zero at any time

REACTOR NUCLEAR INSTRUMENT SPECIFICATION NI-9

Equipment Title	Log-Count-Rate Meter with Period	
Quantity	Two	
Function	Used in source-range channels to indicate pulse rate from BF_3 counter circuit.	
Ambient Conditions	Temperature:	65 to 80°F (normal); 110°F (max. intermittent)
	Maximum Relative Humidity:	95%

Specifications

Input:	Negative pulse of 50 micro-volts (0.7×10^{-6} amp) or greater, of at least 0.1-msec duration and 2 msec or less rise time, across 75-ohm cable impedance.
Output:	A 2-volt, 1-msec pulse, from the discriminator, to operate the scaler.
Log Count Rate:	0 to 1 ma to external meter, and to recorders as required, i.e., 0 to 50 mv.
Period:	0 to 1 ma to external meters (-30 to ∞ to + 3 sec), and to recorders as required, i.e., 0 to 50 mv.
Trip Circuits:	Three with -20 to 0 volt output, and relay contacts, 115 VDC, 3 amp, 2 DPDT.
Range:	
Count Rate:	1 to 10^5 counts/sec.
Period:	Minus 30 to ∞ to + 3 sec.
Period Trip Set:	Plus 30 to + 1 sec.
Count Rate Trip Set:	10 to 10^6 counts/sec.

Operating Characteristics:

Pulse Circuit Resolution:	0.5 msec to pulse pairs.
Count Rate Accuracy:	Plus or minus 20 per cent of indicated value from input to output on the meter.
Period Accuracy:	Plus or minus 3 per cent referred to the maximum reciprocal period.
Trip Circuit Repeatability:	Trip occurs within ± 1 per cent of set point.
Log Count Rate Drift:	Less than 5 per cent of a decade per day, non-cumulative.
Period Drift:	Less than 3 per cent per day, non-cumulative.
Trip Circuit Set Point Drift:	Less than 1 per cent per week, non-cumulative.
Trip Circuit Response Time:	Less than 1 msec to trip and 3.5 msec for relay contact closure.

Front Panel:

Function Switch:	Operate-Dwell-Calibrate (120 counts/sec, 5×10^4 counts/sec, and infinite and plus 4-sec period).
Trip Reset Buttons:	As required.
Trip Indicators:	Lights red, to indicate tripped condition of each trip circuit.
Log Count Ratemeter:	Six decades on 4-1/2-in. scale. (Other calibration optional).
Period Meter:	Hyperbolic Calibration: 30 to oo to + 3, on a 4-1/2-in. scale.
High Voltage Meter:	0 to 2000 VDC, 2-1/2-in. scale.
Trouble Indicators:	High and low voltage supply, circuit continuity and output off-normal. Lights yellow to indicate trouble.

Special Features

OFF-NORMAL Monitor:	Log count rate is continuously monitored for operation within normal output limit. Alarm contacts and an indicator light are provided.
Circuit Continuity:	A circuit is provided to assure that all modules are properly inserted. Alarm contacts and an indicator light are provided.

General

Power Requirements:	30 watts, 115 VAC ± 20 per cent, 60 cycle ± 5 per cent.

REACTOR NUCLEAR INSTRUMENT SPECIFICATION NI-10

Equipment Title	Log N Amplifier with Period	
Quantity	Two	
Function	Used to provide logarithmic indication of power level from 10^{-4} to 150% full power.	
Ambient Conditions	Temperature:	65 to 80°F (normal); 110°F (max. intermittent)
	Relative Humidity:	95% (max.)

Specifications

Log Current and Period Monitor

Input:	10^{-10} to 5 x 10^{-4} amp.
Output:	
Log N:	0 to 50 mv to recorder, 0 to 1 ma to external Log N meter.
Period:	Minus 30 to ∞ to + 3 sec.

Operating Characteristics:

Log N:	Trip adjustment - 10^{-9} to 5 x 10^{-4} amp.
Period:	Trip adjustment - Plus 30 to + 3 sec. Drift less than 3 per cent per day, non-cumulative.
Trip Circuit:	Set point drift - Less than 1 per cent per week, non-cumulative. Response time - Less than 10 msec at 10^{-8} amp input. Less than 30 msec at 10^{-9} amp input.

Front Panel:

Function Switch:	Operate, Dwell, Calibrate (.001 per cent 100 per cent, ∞ and 4-sec period).
Log N Meter:	Logarithmic calibration 10^{-10} to 5 x 10^{-4} amp, 4-1/2-in. scale.
Period Meter:	Hyperbolic calibration -30 to ∞ to + 3-sec period, 4-1/2-in. scale.
High Voltage Meter:	Calibrated 0 to 1.0, has range change switch, 2-1/2-in. scale.
Three Trip-Reset Indicating Switches:	Lights red to indicate trip condition.

Special Features	Continuous monitoring for normal operation. Continuous monitoring of circuit and chamber cable continuity.

General

Power Requirements:	30 watts, 115 VAC ± 20 per cent, 60 cycle, ± 5 per cent.

REACTOR NUCLEAR INSTRUMENT SPECIFICATION NI-11

Equipment Title: Safety Amplifier

Quantity: Two

Function: Used to amplify the input current from the uncompensated ion chambers for indicating and recording; used to provide over-flux trip information to the scram logic circuit of the safety system.

Ambient Conditions:
Temperature: 65 to 80°F (normal); 110°F (max. intermittent)
Relative Humidity: 95% (max.)

Specifications

Input: 0 to 1.5×10^{-3} amp.

Output:
0 to 1 ma to an external meter.
0 to 10 mv to a recorder.
Trip Circuit. 0 or -20 volts. Relay contacts, DPDT, 115 VDC. (For secondary functions.)

Range:
Ion current - 0 to 1.5×10^{-3} ma.
Trip level adjustment - 10 to 150 per cent of full range.

Operating Characteristics:
Amplifier Accuracy - Plus or minus 2 per cent of full scale.
Amplifier Drift - Less than 1 per cent per day.
Trip Circuit Repeatability - Trip occurs within ± 1 per cent of set point.
Trip Circuit Set Point Drift - Less than 1 per cent per week, non-cumulative.
Over-all Response Time - Less than 0.1 msec from step change in input current to trip when the trip is set to a value corresponding to 63 per cent of the input step.

Front Panel:
Power Level Meter - 4-1/2 scale, calibrated linerly from 0 to 150 per cent.
Chamber high voltage meter, 2-1/2-in. scale.
High voltage range change switch.
Function Switch - 3 position; operate, zero point calibrate and 100 per cent calibrate.
Indicating Switches - Off Normal, Continuity, Low Voltage, Trip.

Special Feature

Off-Normal Monitor: Amplifier output is continuously monitored for operating within its normal range.

Circuit Continuity: A circuit is provided to assure that all modules are properly inserted and that chamber cables are attached. Alarm contacts and an indicator light are provided.

General

Power Requirements: 30 watts, 115 VAC ± 10 per cent, 60 cps ± 5 per cent.

REACTOR NUCLEAR INSTRUMENT SPECIFICATION NI-12

Equipment Title Micromicroammeter

Quantity Two

Function Used in the intermediate-range and power-range channels to indicate current from compensated ionization chamber; used over range of 10^{-4} - 200% full power.

Ambient Conditions

Temperature: 60 to 80°F (normal); 110°F (max. intermittent)

Maximum Relative Humidity: 95%

Specifications

Input Characteristics:

Accepts signals from a compensated ion chamber over the range of 10^{-11} to 10^{-3} amp.
Remote range selector signal for changing the amplifier range.

Output Characteristics:

Linear current meter indication.
0 to 1 ma to external meter of input to meter and recorder auctioneer.
0 to 10 mv to recorder.
Three trip circuit output voltages and relay contacts.
Output voltages are + 20 or 0 volts and relay contacts are 115 VDC, 3 amp, DPDT.
Chamber high voltage: fixed 700 volts or variable from 300 to 700 VDC.
Chamber compensation voltage: variable from 0 to 100 VDC.
Two sets of contacts from channel trouble relay used to operate alarm or interlock circuits when channel is not operating properly. DPDT contacts, 115 VDC, 3 amp.

Range:

Current: 10^{-10} to $^{-4}$ amp full scale, with thirteen range selections available.
Trip circuit level adjustments: 10 to 150 per cent on any range.
Chamber high voltage: fixed 700 volts or variable 300 to 700 volts.
Chamber compensation voltage: 0 to 100 volts.

Operating Characteristics:

Amplifier accuracy: ± 3 per cent of full scale on upper five decades.
± 5 per cent of full scale on lower two decades.
Amplifier drift: less than 1 per cent of full scale on upper five decades. Less than 5 per cent of full scale on lower two decades.
Trip circuit reproducibility: ± 2 per cent of each trip level range without adjustment.
Trip circuit drift: ± 1 per cent of each trip level range per week.
Response time: from step change in input power level until the trip circuit output reaches 63 per cent of its trip level, when it is set to trip at the level corresponding to 63 per cent of the step change in input level - less than 5 msec for the upper five decades, less than 25 msec for the sixth decade, and less than 250 msec for the seventh and subsequent decades.
Chamber voltage regulation: ± 0.5 per cent to line and load.
Stability: 1 per cent per week.
Ripple: 0.1 per cent rms.

Input Power:

115 volts ± 10 per cent, 60 cps ± 5 per cent, 30 watts.

Front Panel Controls:

Power level meter, 4-1/2 in.
Range selector: 13 positions.
Chamber voltage meter, 2-1/2 in. with range change switch.
Calibration switch for inserting three calibration signals into the current amplifier.
Trip indicators.
Trip resets.
Trouble indicators for power supplies and signal continuity.

Dimensions and Mounting:

Standard 3-3/4 by 19-in. panel.
Chassis depth: 13 in.
Plug-in modular construction.

REACTOR NUCLEAR INSTRUMENT SPECIFICATION NI-13

Equipment Title	Dual-Element Galvanometer With Shunts and Adjusting Devices
Quantity	Two
Function	Used to indicate power level over range from 10^{-2} to 200 per cent full power; channel shall be completely battery powered.
Ambient Conditions	Temperature: 65 to 80°F (normal); 110°F (max. intermittent)
	Relative Humidity: 95% (max.)

Specifications

Input Power:	Battery
Scale:	300 mm (minimum)
Sensitivity:	10^{-10} amp per mm full-scale deflection
Ranges:	10^{-10} to 10^{-5} amp
Period:	4 sec
Linearity:	0.5% full-scale deflection
Installation:	No. 1 galvanometer and shunt shall be located on the central desk of the console as shown in Fig. 803-9. No. 2 galvanometer and shunt shall be located in a separate building outside of containment.

REACTOR NUCLEAR INSTRUMENT SPECIFICATION NI-14

Equipment Title: Strip Chart Recorder

Quantity: Two

Ambient Conditions: Temperature: 65 to 80°F (normal); 110°F (max. intermittent)

Maximum Relative Humidity: 95%

Specifications

Chart Width:	7 in.
Chart Speed:	6 in. per hour with gears included for higher speeds.
Pen Speed:	Full-scale travel in less than 5 sec
Input Sensitivity:	10 mv full scale.
Linearity:	± 1%
Sensitivity:	10 mv full scale
Outputs:	Two switches, each with 1 N.O. and 1 N.C. contacts rated 0.5 amp at 125 volt d-c. Each switch adjustable over full range.
Scale:	Safety - 0 to 150% Log N - 10^{-4} to 150%
Calibration:	Safety - Linear Log N - Logrithmic 6-1/2 decades
Accuracy:	± 0.3% of range.

REACTOR NUCLEAR INSTRUMENT SPECIFICATION NI-15

Equipment Title	Strip Chart Recorder	
Quantity	Two	
Ambient Conditions	Temperature:	65 to 80°F (normal); 110°F (max. intermittent)
	Relative Humidity:	95% (max.)

Specifications

Power:	115-v 60-cps; single-phase
Chart Width:	4 in.
Chart Speed:	3 in./hr
Pen Speed:	Full-scale travel in less than 3 sec
Input Sensitivity:	10 mv full scale
Sensitivity:	± .1% of full scale
Scale:	Period: -30; Infinity: +3 sec; Micromicroammeter: 0 to 150%
Calibration:	Period - Hyperbolic Micromicroammeter - Linear
Accuracy:	± 0.75% of range

REACTOR NUCLEAR INSTRUMENT SPECIFICATION NI-16

Equipment Title Indicating Meters

Quantity Three

Function Used to indicate the log count rate, reactor period, and micromicroammeter output.

Ambient Conditions

Temperature: 65 to 80°F (normal); 100°F (max. intermittent)

Relative Humidity: 95% (max.)

Specifications

Meter Size:	4 in.
Scale:	7-in. circular, 250°
Location:	Central desk of control console.
Accuracy:	± 1%
Calibration:	Log Count Rate - Logarithmic - 6 decades. Period - Hyperbolic - -30 -∞ - +3 sec Micromicroammeter - Linear - 0 - 150%
Sensitivity:	10 mv for full scale deflection

C. Radiation Monitoring Instrumentation System

The BONUS Area Radiation Monitoring System is designed to indicate and record any changes in radiation levels which may denote abnormal plant operating conditions due to radioactive contamination; to indicate and record the general radiation levels in the plant for general personnel health monitoring; to provide operating personnel with information on radiation levels prior to entering an enclosed area; to initiate reactor shutdown and building ventilation closure when excessive radiation is present in the building exhaust air; to detect and assist in locating ruptured fuel elements; and to provide portable equipment to be used in addition to the permanently located detectors. The complete system is designed to fulfill all the provisions in the Code of Federal Regulations, Title 10, Part 20, Section 20.203, which govern exposure of personnel to radiation and, Title 10, Part 70, Section 70.24, which requires that all licensees authorized to possess in excess of 500 grams of contained U^{235}, 300 grams of plutonium, or 300 grams of U^{233} shall maintain a monitoring system which shall energize clearly audible alarm signals.

1. Area Radiation Monitoring

The area radiation monitoring system consists essentially of thirty (30) general radiation monitoring stations whose readings are indicated, recorded, and alarmed in the main control room, and three (3) very high-level area monitoring stations whose readings are indicated in the pillbox. The detectors are located strategically throughout the plant (according to Figs. 802-8, 802-9, and 802-10) to give an overall mapping of the radiation levels; Table 802-2 is a detailed listing of all the detector positions in the plant.

a. General Radiation Monitoring System

The general radiation monitoring system consists of 1) detectors, 2) station indicators, 3) power and control units, 4) recorders, 5) accessories, and 6) emergency power provision.

(1) Detectors. Thirty-three (33), including three (3) spare Tracerlab Model TA-6 Remote Detectors and thirty (30) Tracerlab Model AX-5 Detector and Wall Bracket Set are provided. The TA-6 Remote Detector consists of a weatherproof housing containing a transistor ratemeter, solenoid-operated Sr^{90} check source, and a halogen-quenched G-M tube. The Remote Detectors cover six decades of logarithmic response. The high current output renders cable leakage and capacity effects negligible, permitting remote cable runs from any location in the reactor building.

Roentgen energy dependence of the TA-6 is flat within ± 20 per cent between 100 kev to 2.5 Mev (measured). Twenty

Table 802-2 AREA MONITORING STATION LOCATIONS

Detector	Maximum Range	Indicator and Warning Light AX-2	Warning Light Only AX-1	Remote Indicator and Warning Light AX-2	Location
RA-1	5000 R/hr	-	-	-	On I-Beam in area near the freight door, El. 22' (Pillbox Indication only)
RA-2	"	-	-	-	On Biological Shield Wall within sight of the Entrance Airlock, El. 50'. (Pillbox Ind. Only)
RA-3	"	-	-	-	On top of Reactor at El. 68' near Access Stairway. (Pillbox Ind. Only)
RB-1	10 R/hr	-	X	X	Air Ejector Room, El. 22'
RB-2	"	-	X	X	Near Main Condenser Hotwell
RB-3	"	-	X	X	Condenser Hogging Pump Room, El. 22'
RB-4	"	-	X	X	Condensate Resin Regeneration Room, El. 22'
RB-5	"	-	X	X	Regenerative Cooler, Preheater, Purification Pumps Room, El. 22'
RB-6	"	-	X	X	Reactor Circulating Water Pump Room
RB-7	"	-	X	X	Feedwater Heater Room, El. 22'
RB-8	"	-	X	X	Inside Turbine Missile Shield, El. 37'
RB-9	"	-	-	-	Mounted on Main Steam Line, El. 61'3"
RB-10	"	-	-	X	Emergency Condenser Vent Line, El. 74'
RB-11	"	-	X	X	Liquid Waste Pump Room, El. 22'
RC-1	100 mr/hr	-	X	X	Vapor Sphere Room, El. 22'
RC-2	"	-	X	X	Decontamination Room, El. 22'
RC-3	"	X	-	-	Condensate Pump Area
RC-4	"	X	-	-	On I-Beam in area near Inlet Plenum, El. 22'
RC-5	"	X	-	-	Reactor Purification System Area, El. 22'
RC-6	"	X	-	-	Load Center Room
RC-7	"	X	-	-	On I-Beam near South Stairway, El. 22'
RC-8	"	X	-	-	Retention Tank Room, El. 22'
RC-9	"	X	-	-	On I-Beam near Feedwater Pump Area, El. 22'
RC-10	"	-	X	-	On base of the Stack in the Exhaust Manhole
RC-11	"	X	-	-	On I-Beam near North Stairway, El. 22'
RC-12	"	X	-	-	On I-Beam near Elec. Maintenance Shop, El. 43'
RC-13	"	X	-	-	On I-Beam near Building Office, El. 43'
RC-14	"	X	-	-	Inside Control Room, El. 43'
RC-15	"	X	-	-	On Wall between Supervisor's Office and Entrance Airlock, El. 43'
RC-16	"	X	-	-	Inside Laboratory
RC-17	"	X	-	-	On I-Beam near Lunch Room Area
RC-18	"	X	-	-	Near Turbine Control Panel, El. 43'
RC-19	"	X	-	-	Fuel Storage Room
RC-20	"	X	-	-	Northeast Corner of Reactor Shield, El. 68'0"
RC-21	"	-	X	X	Top of Reactor Shield near Access Stairway, El. 68'
RC-22	"	-	X	X	Reactor Shield Service Platform, El. 61'3"

ratemeters have a range of 0.01 to 100 mr/hr and ten ratemeters have a range of 0.01 mr/hr to 10 r/hr.

Two (2) moisture-sealed miniature potentiometers are mounted on the base of the probe and are used only when the true calibration parameters are set at the factor or are used in conjunction with the AX-4 Calibration Set. Once calibrated, all detector assemblies are fully interchangeable, and will give the same readings regardless of differences in channel cable lengths.

The two connectors on the detector base are waterproof. One connector provides the power cable and signal connection, while the other provides the connection for the detector accessories.

Since all voltage is applied to the probes by the TA-1 Control and Power Supply (see item 3), any overvoltage produced by the TA-1 can be withstood by the TA-6 Probes.

Operation of the detector is unaffected by an accumulated dosage of up to 10^6 r gamma.

Thirty (30) AX-5 Detector and Wall Bracket Sets are used for mounting the probes. The AX-5 consists of a combination bracket and handle and of a wall-mounting plate. One of the AX-5 mounts was modified to allow the detector to mount on an 8-in. steam line with 4-1/2 in. of insulation.

(2) Station Indicators. Thirty (30) Tracerlab Model TA-3 Station Indicators are supplied in six (6) Tracerlab Model TA-2 Auxiliary Chassis. Ten (10) of the TA-3 Station Indicators have a meter range of 0.01 mr/hr to 10 r/hr. Twenty (20) of the TA-3 Station Indicators have a meter range of 0.01 to 100 mr/hr. The TA-3 Station Indicators continuously monitor the current output from each remote detector on an adjustable trip meter relay. Station Indicators are completely interchangeable from channel to channel, requiring only that the station indicator and remote detector are calibrated to the same range.

Each TA-3 meter relay has a manually-set alarm pointer. Upon closure of the meter contacts, the following alarms will operate: 1) a flashing red light at the AX-1 or AX-2 units near the probe; 2) a small, continuous red light at the TA-3 Station Indicator; 3) a large, flashing red light at the TA-1 Multi-Channel Power Supply and Control Unit, which will, in turn, initiate annunciation on the main control panel. When the alarm condition ceases the TA-1 and AX-1 lights automatically go off. However, the TA-3 lights stay on to give a memory of the channel causing the

alarm condition. These TA-3 indicating lights are reset manually by pressing an alarm reset button on the TA-1 Control Unit.

(3) Power and Control Units. Three (3) Tracerlab Model TA-1 Multi-Channel Power and Control Units are mounted on Panel Section A of the main control panel. Each TA-1 provides power for ten (10) remote detectors, ten alarm circuits, and ten check sources. The TA-1 contains the master channel indicating meter, master alarm circuitry, automatic and manual alarm reset functions, master alarm flashing light, and recorder outputs. The B+ and high voltages are relayed for failsafe operation. An electrical or physical catastrophe occurring in any one remote detector will have no effect in any other channel. Operation of the detector check source solenoids are controlled from the TA-1.

The TA-6 Remote Detector is fully transistorized. However, the TA-1 Power and Control Units contain vacuum tubes in their circuitry. The TA-3 alarm lights show steadily during alarm conditions, whereas the TA-1 and the remote AX-1 and AX-2 alarm lights flash periodically to be more readily noticed.

A locking-type power switch, power-indicating pilot light and fuses are provided on each TA-1.

The twenty (20) 100 mr/hr channels are connected to a 20-point recorder, and the ten (10) 10 r/hr channels are fed to a 10-point recorder.

(4) Recorders. Two (2) multipoint strip chart recorders, one with 20 points and the other with 10 points are located in the control room. Each recorder is an L & N Type G, as described in specification sheets in Table 802-3.

(5) Accessories.

(a) Remote Alarm Lights. Thirty (30) Tracerlab Model AX-1 Remote Alarm Lights (modified) are provided. These units mount on the TA-6 Remote Detectors, and plug into the TA-6. The AX-1 has a 6-watt incandescent bulb and a 1-in. red torpedo lenz with a 240° view. It also has a headphone output jack for aural monitoring of Geiger "clicks." The AX-1 is modified to include a base-mounted, waterproof connector for the AX-2 to connect to the AX-1.

(b) Remote Alarm Lights. Fifteen (15) Tracerlab Model AX-2 Remote Meter and Alarm Lights (modified)

are provided. Modification of the AX-2 consisted of housing the light and meter in a wall-mountable enclosure rather than the standard probe-mounting enclosure. The AX-2 will connect to the AX-1 Remote Alarm Lights.

(c) Calibration Meter. One (1) Tracerlab Model AX-3 Calibration Meter is provided. The portable AX-3 has a five-inch scale (0.01 mr/hr to 10 r/hr). It plugs into the TA-6 probe for making calibration adjustments while the probe is detecting radiation from a calibration source.

(d) Calibration Set. One (1) Tracerlab AX-4 Calibration Set is provided. The AX-4 consists of a 20-μc Co^{60} check source and a 35-mc Cs^{137} source, both of which are housed in special shields. These sources fit over the end of the detector, insuring reproducible geometry.

(6) Emergency Power Provision. An emergency power supply is provided which converts the 125-volt d-c station battery power to a 115-volt a-c supply. This supply will automatically deliver power for the entire Area Monitoring System when the normal a-c power fails. Transfer time from station power to emergency power is less than 1 sec.

b. Area Monitoring — High Radiation Level

A high-radiation-level monitoring system has been provided to detect radiation levels up to 5000 r/hr which might exist due to accidental exposure of radioactive fuel assemblies or other nuclear incident; the level readings are indicated in the pillbox. The high-radiation-level system consists of three detectors, Victoreen Model A718A, having a radiation detection range of 0.005 to 5000 r/hr. As indicated in Figs. 802-8, 802-9, and 802-10, the three high-level detectors RA-1, RA-2, and RA-3 are located to give a general radiation level reading at the top of the reactor pressure vessel, of the general area in front of the entrance air lock, and of the general area in front of the freight door.

The indicators for the high-radiation-level detectors are located in tne pillbox outside of the containment building and consists of three rate meters, Victoreen Model 712.

The complete system operates from its own d-c power source located in the pillbox.

c. Area Monitoring Equipment Specifications

The general specifications for the area monitoring instruments are listed in Table 802-3.

Table 802-3 AREA MONITORING EQUIPMENT SPECIFICATION SHEETS

This table is made up of the following specification sheets:

Specification Sheet No.	Equipment Description
TA-1	Power Supply and Control Unit
TA-2	Auxiliary Chassis
TA-3	Station Indicator
TA-6	Remote Detector
AX-1	Remote Alarm Light
AX-2	Remote Meter and Alarm Light
AX-3	Calibration Meter
AX-4	Calibration Set
AX-5	Detector and Wall Brackets
712	Three-Channel Monitor
A718A	High-Level Detector
Model-S	Station Activity Recorder

AREA MONITORING EQUIPMENT SPECIFICATION TA-1

Equipment Title: TA-1 Multi-Channel Power Supply and Control Unit

Quantity: Three

Specifications

Capacity:	Powers up to 10 channels
Master Meter:	4-1/2-in. meter, by rotary switch, indicates reading of: (a) Any channel radiation intensity (b) Detector high voltage (c) Alarm relay voltage
Check Source Control:	Push-button operated
Alarms:	Two SPDT circuits rated at 115 VAC, 3 amp for remote aural or visual alarms (a) Actuated by power failure or high radiation intensity in any channel (b) Aural alarm output disabled by push-button; automatically reset (c) Visual alarm light, on panel, automatically reset. Light, 6-watt incandescent, large red 1-in. jewel. (d) Alarm lights on station indicators and detectors reset manually by push-button on control and power unit to provide "memory."
Detector Input Connectors:	Ten, 8-pin, miniature connectors, plug-in.
Auxiliary Output Connectors:	Two, 26-pin, miniature connectors, plug-in.
Adjustments:	One only (a) Single potentiometer for H.V. located inside chassis.
Power Switch:	(a) "On-Off," locking type (b) Indication: (1) "Power," 1/4-watt, white miniature neon, steady (2) "Low," 1/4-watt, red, miniature neon
Output Voltages:	+480 VDC, regulated to 0.1 per cent +150 VDC, unregulated +22.5 VDC, regulated to 1.0 per cent
Input Power:	100 to 130 VAC, 60 cycle, 200 watts
Recorder Outputs:	10-mv output standard for single or multi-point potentiometer recorders.
Dimensions:	For relay rack mounting, panel, 7 in. x 19 in.; chassis, 15-1/2-in. depth.
Weight:	22 lb

AREA MONITORING EQUIPMENT SPECIFICATION TA-2

Equipment Title: TA-2 Auxiliary Chassis

Quantity: Six

Specifications

Capacity:	Up to five TA-3 station indicators
Connectors:	Blue ribbon type, 16-pin, heavy-duty, floating for exact alignment.
Cable:	Single cable for connection to control and power unit
Channel Identification:	Frosted plastic strip supplied for pencil or ink identification, erasable. Typewritten identification may be inserted.
Construction:	Fully enclosed; provides dust protection for relays.
Dimensions:	For relay rack mounting, panel, 7 in. x 19 in., 6-in. depth.
Weight:	6 lb

AREA MONITORING EQUIPMENT SPECIFICATION TA-3

Equipment Title: TA-3 Station Indicators

Quantity: Thirty (30)

Specifications

Ranges:	Model TA-3 - 100 MR (0.01 mr/hr to 100 mr/hr) Model TA-3 - 10R (0.01 mr/hr to 10 r/hr)
Meter:	2-1/2-in. meter relay, calibrated in mr/hr. Adjustable alarm setting on meter. Meter coil protected by 300-volt insulation.
Alarm Indication:	Pilot light, 1/4-watt, red, miniature neon, indicates alarm condition. Pilot is reset manually from control and power unit by push-button to provide "memory."
Adjustments and Potentiometers:	None
Connectors:	Blue ribbon, 16-pin, heavy-duty, floating for exact alignment.
Mounting:	(a) Mounts in auxiliary chassis, TA-2 (b) Secured by lock-thru shaft
Dimensions:	Panel, 3 in. x 5 in. high; 5-1/2 in. depth
Weight:	1-1/2 lb

AREA MONITORING EQUIPMENT SPECIFICATION TA-6

Equipment Title TA-6

Quantity Thirty-three (33)

Specifications

Detector:	Rugged, long-life, Halogen-quenched G-M counter; approximately 1/20 cu. in. sensitive volume; sensitive to gammas, minimum to 10^{10} counts. (a) Cannot be damaged by over-voltage or high-intensity radiation.
Detection Range:	Model TA-6 - 10R (0.01 mr/hr to 10 r/hr)
Roentgen Energy Dependence:	Flat within $\pm$ 20%, 100 kev to 2.5 mev (measured)
Current Output:	100 microamps at 10 r/hr
Temperature Range:	$0^{\circ}F$ - $175^{\circ}F$; less than 2 per cent current change over range
Check Source:	Built-in, one microcurie Sr^{90} check source. Solenoid-operation by pushbutton from control and power unit.
Alarm Light Output at Detector:	115 VAC, nominal 6 watts; available at detector base; used to operate remote alarm light, AX-1
Meter Output at Detector:	50 μa at 10 r/hr, available at detector base. Used for AX-2 remote meter and alarm light, or when performing true calibration with AX-3 calibration meter, and with AX-4 calibration set.
Detector Housing:	Weatherproof. Turned brass base with aluminum shell, painted.
Calibration Adjustments:	Two miniature potentiometers, used only when performing true calibration with AX-4 calibration set.
Connectors:	Waterproof. 12-pin jack for supply cable; 7-pin jack for accessory outputs.
Dimensions:	3 in. diameter x 10 in. length, not including connectors.
Weight:	2 lb

AREA MONITORING EQUIPMENT SPECIFICATION AX-1

Equipment Title — AX-1 Remote Alarm Light

Quantity — Fifteen (15)

Specifications

Description: 6-watt, incandescent bulb, 1-in. red torpedo lens, 240° view. Includes headphone output jack for aural monitoring of Geiger "clicks."

Dimensions: 3-1/8 in. x 3 in. x 3-5/16 in.

Weight: 1/2 lb

AREA MONITORING EQUIPMENT SPECIFICATION AX-2

Equipment Title — AX-2 Remote Meter and Alarm Light

Quantity — Thirty (30)

Specifications

Meter Ranges: AX-2-100MR - 0.01 mr/hr to 100 mr/hr
AX-2-10R - 0.01 mr/hr to 10 r/hr

Sealed Meter:

Dimensions: 3-1/8 in. x 4 in. x 3-5/16 in.

Weight: 3/4 lb

AREA MONITORING EQUIPMENT SPECIFICATION AX-3

Equipment Title	AX-3 Calibration Meter
Quantity	One
Specifications	
Range:	0.01 mr/hr to 10 r/hr on a 5-in. scale, for use when making calibration adjustments. Plugs into probe.
Weight:	2 lb

AREA MONITORING EQUIPMENT SPECIFICATION AX-4

Equipment Title — AX-4 Calibration Set

Quantity — One

Specifications

Description: Consists of two sources:

(a) 20 μc Co^{60} source, housed in specially designed shield.

(b) 35 mc Cs^{137} source, housed in specially designed shield.

These sources fit over the end of the detector, insuring reproducible geometry. (AEC license required).

Weight: 25 lb, set.

AREA MONITORING EQUIPMENT SPECIFICATION AX-5

Equipment Title — AX-5 Detector and Wall Brackets Set

Quantity — Thirty (30)

Specifications

Description: Combination bracket, handle and bench cradle for detector; with wall mounting plate.

Dimensions: Combination handle, 6 in. x 3-1/2 in. x 3-1/2 in. wall plate, 7-1/2 in. x 4-3/4 in. x 2 in.

Weight: Combination handle, 1 lb.
Wall plate, 1 lb.

AREA MONITORING EQUIPMENT SPECIFICATION 712

Equipment Title	712 High Level Monitoring System
Quantity	Three (3)

Specifications

Range:	6 decades, .005 r/hr to 5000 r/hr.
Gamma Energy Response:	Independent within ± 10% from 80 kev to 2 mev
Accuracy:	Better than ± 15% of actual intensity over entire range.
Stability:	Less than 5% loss of accuracy due to line voltage variations from 100 to 130 volts.
Response Time:	Is inversely proportional to incident radiation intensity. Approximately 10 sec at 1.0 mr/hr.
Recorder Output:	10 mv full scale for each channel
Alarm Contacts:	5 amp at 115 VAC

AREA MONITORING EQUIPMENT SPECIFICATION A718A

Equipment Title	A718A Sensing Elements
Quantity	Three (3)

Specifications

Ion Chamber:	Housed in a water-tight, vapor-tight, immersion-proof container and hermetically sealed at approximately 5 atmospheres pressure - voltage saturated - operated at 100 v nominal.
Check Source:	Fixed position Sr^{90} calibration check-source with solenoid actuated shutter.
Electrometer Tube:	5886 Electrometer Tube
Range:	.005 r/hr to 5000 r/hr
Dimensions:	5 in. diameter x 5-7/8 in. length
Weight:	Approximately 3-1/4 lbs
Mounting:	Bracket mounted to wall

AREA MONITORING EQUIPMENT SPECIFICATION MODEL-S

Equipment Title	Station Activity Recorder
Quantity	Two (2)
Specifications	
Catalog:	60360-(3003)-(-805)-M1-P2-P4-P11-P12-C24-E5 Speedomax Type G Model S.
Type:	D.C. Potentiometer multiple-point curve printing.
Record:	Multi-color numbered dot for each point.
Range:	0-10 mv
Scale:	0.01 mr/hr to 10 r/hr 0.01 mr/hr to 100 mr/hr
Chart No:	3003 (6-decade log) 10-point recorder 805 (4-decade log) 20-point recorder
Chart Speed:	12 in./hr
Printing Speed:	4 sec/pt.
Current Standard-ization:	Regulated voltage supply.
Power Supply:	120 volt, 60 cycles.
Case:	Metal w/gasketed door for flush mounting.
Features and Accessories:	(1) Internal fluorescent illumination (2) Chart tear-off device (3) Rubber stamp, bracket, and chain (4) Legend plate

2. Air Particulate — Gas Monitoring Systems

Two fixed filter and two moving filter air particulate monitoring systems are used to measure the concentration of radioactive particles in the station air; to verify the effectiveness of protective techniques; provide adequate warning in case of an accident resulting in the release of radioactive particles; obtain historical data on plant operating conditions. Each of the moving filter particulate systems are equipped with a radioactive gas monitoring system to be used in conjunction with the air particulate monitoring systems.

The two fixed filter monitoring systems are identical pieces of equipment mounted on carts for portability. One fixed filter monitor is located on each floor of the reactor building. They are used to: establish the integrated background for limited access areas; to assist in locating the source of radioactive particles that may be present; provide continuous particulate monitoring of any area in the building. Each monitor is complete with power supplies, ratemeters, check sources, detectors, air pumps, and alarms.

The two moving filter air particulate-gas monitoring systems are identical except for the location of their associated recorders. One will have a two-pen recorder mounted integrally, whereas, the two-pen recorder for the second unit is located in the pillbox. The pillbox recorder is equipped with a re-transmitting potentiometer to transmit the signal to a two-pen recorder in the control room.

One unit is located in the reactor building to assist in sampling for radioactive air particulate and/or gaseous products that may be present due to equipment failure, for mapping dose levels within the reactor building, to permit immediate replacement of the fixed unit when maintenance is required.

The second unit is located outside the reactor building near the exhaust stack, in a weather-proof enclosure. A continuous sample of the building effluent gas is circulated past the gaseous detector, through the moving filter and returned to the stack to be discharged to the atmosphere.

Radioisotopes present in the air as particulates, or which adhere to dust particles, are measured by drawing 10 cfm of air through the 0.3 micron moving filter paper. The collected particles are passed in front of the scintillation detector and the activity level measured and recorded.

The portable gaseous detector is used to: measure the radioactive gas activity in the environmental air; sample equipment off-gas at various sampling locations; monitor the nuclear instrument thimbles during purging operations to determine the presence of Argon 41.

The fixed monitor located outside the reactor building near the stack monitors building effluent gas for concentrations of A^{41}, N^{16}, O^{19} and Ne^{23}.

High activity in the exhaust effluent measured by the air particulate-gas monitor initiates: pre-scram alarm; reactor scram; scram alarm; closure of the building isolation valves, preventing release from the building of radioactive particulate and/or radioactive gaseous products exceeding the maximum permissible concentrations as outlined by the National Committee on Radiation Protection; closure of the gland seal diversion valve and stack isolation valve; opening of the vapor sphere admission valve to provide adequate holdup capacity for the ejector gases.

The equipment making up these units is described in the specification sheets listed in Table 802-4.

3. Fuel-Element Failure Detection System

The Fuel-Element Failure Detection System consists of a dual channel gamma spectrometer system for monitoring the following:

- —Exhaust gases from the turbine condenser via a holdup tank for detection of the fission product gases Xenon-135, Xenon-138, or Iodine-135.
- —Any of the following stations for detection of the fission products Xenon-135, Xenon-138, or Iodine-135, using a portable monitor connected to the main control panel by a patch cord:
  - —Reactor superheater outlet lines;
  - —reactor saturated steam sample;
  - —reactor purification system ion exchangers;
  - —condensate purification system ion exchangers.

The design of the fuel-element failure detection system is patterned after the EBWR design as described in Paper No. 2379, Appendix A, entitled, "A Fission Product Monitor for a Boiling Water Reactor," by R. D. Cook, Volume 9, Nuclear Power Plants, Part 2, Second International Conference on Peaceful Uses of Atomic Energy, Geneva, September 1958.

The fuel-element failure detection system (Fig. 802-11) consists of the following equipment:

- —Two (2) - Tracerlab RM-40 dual power supplies to supply the high and low voltages required.
- —Two (2) - Tracerlab MD-5 gamma scintillation detectors, consisting of a 1-1/2-in. dia. x 1-in. sodium iodide thallium activated crystal and a photomultiplier tube with a mu-metal shield. Impingement of gamma rays upon the crystal will generate pulses of light in the crystal. The light pulses are detected by the photomultiplier tube and converted to electrical pulses.

—Two (2) - collimating shields, with lifting hooks, provide the required shielding for the scintillation detectors. Each lead shield has a 3/4-in. aperture with a removable plug to reduce the diameter of the aperture to 1/4 in. The shield is located so the axis of the collimating hole is directed at the point that is to be monitored. A special cart is used for transporting the detectors and shields about the plant.

—Two (2) - pre-amplifiers are mounted integral with the collimating shields. The output impedance of the photomultiplier tube is extremely high and is not capable of transmitting these small electrical pulses without degradation over long lengths of cable; therefore, an impedance converter (pre-amplifier) is provided to transmit the signal pulses from the detector-photomultiplier tube to the rate meters in the control room.

—Two (2) - Fluke high voltage power supplies supply the high voltage for the scintillation detectors. The stability of this unit guarantees that once the detector has been set to observe a given gamma spectrum, drift will be kept to a minimum. The pulse signal from the MD-5 detector, the build up of which is proportional to the incident gamma energies, is transmitted to the spectrometer rate meters. Each rate meter has a variable discriminator and window control. The rate meter low voltage power is supplied by the RM-40 power supply.

—Four (4) - RM-10RS rate meters are used. The first rate meter discriminator and window controls are adjusted so that the rate meter will only count energy pulses falling within the window. After the controls are adjusted, for example, so that rate meters count only gammas in the energy range of .07 to 1.5 Mev, the rate meter would then count pulses produced by Xe^{135} plus the N^{16} Compton plateau in that energy range. The other RM-10 spectrometer rate meter would be adjusted so that the window operates on integral and the discriminator is set so that rate meter counts all pulses from the N^{16} above a given energy, for example, 4 Mev. During normal operation with no fission products in the line, the discriminator of the second rate meter would be adjusted so that rate meter count rate equals that of the first rate meter. Each count rate meter produces a 0-10 mv analog signal. For the first rate meter, the signal would be proportional to the Xe^{138}, or X^{135}, or I^{135}, plus N^{16} Compton. The second rate meter analog signal would be proportional to the N^{16} signal above a given energy. Since the two rate meter signals have been balanced, the second rate meter signal would also be equal to the N^{16} Compton. The second rate meter 0 to 10 mv analog signal is subtracted from the first rate meter 0 to 10 mv analog signal. This signal subtraction is performed with the MX-25D circuit. The analog signal coming from the MX-25 will indicate the quantity of Xe^{135} or X^{138} or I^{135} fission products in the sample. The signal is then presented on one of the two pens of a two-pen recorder. The recorder may be furnished with an

alarm point which could be set to alarm above a given Xe^{135} or X^{138} or I^{135} count rate.

—Two (2) - difference circuits are provided to subtract the signal from the ratemeters and supply a 0 to 10 mv output signal to the recorder.

The general specifications for the fuel-element failure detection equipment are listed in Table 802-5.

4. Personnel Safety Monitoring Equipment

In addition to the fixed station monitors, the BONUS plant is equipped with portable monitoring equipment to provide further safeguards for personnel and equipment.

The general specification for the personnel safety equipment are listed in Table 802-6.

Table 802-4 AIR PARTICULATE AND GAS MONITOR SPECIFICATION SHEETS

This table is made up of the following specification sheets:

Specification Sheet No.	Equipment Description
MAP-5	Fixed Filter Monitor
MM-6	Log Transistor Ratemeter
MA-1A	Filter Tape Transport Mechanism
MD-1A	Beta-Gamma G-M Detector Assembly
MX-14A	Pumping System
MX-16A	Systems Housing
MX-1	Air Flow Alarm
MX-9	Check Source and Mechanism
MG-1A	Gas Sampler
MD-5A	Gamma Scintillation Detector
DeVar	2 Pen Transistorized Recorders

Equipment Title — MAP-5 Fixed Filter Monitors

Quantity — Two (2)

Specifications

Filter Holder and Detector Assembly

Detector:	DuMont 6292 2 in. photomultiplier tube with integrally coupled plastic phospher.
Detector Background:	Approximately 10.0 cpm with clean filter.
Filter Holder:	Two piece cast aluminum, filter holder on front panel.
Filter Paper:	2-in.-diameter Hollingsworth and Vose HV-70.
Filter Paper Mount:	Filter placed on machined surface to provide leaktight air and light sealing.
Detector Protection:	Filter holder assembly provided with high voltage interlock to prevent damage to photomultiplier tube when filter holder assembly is opened for filter replacement.

Pump Assembly

Pump:	Dry carbon vane positive displacement.
Pump Capacity:	2.75 cfm at 5 in. mercury.
Motor:	1/3-hp sealed ball bearing, induction type. Continuous duty temperature rise above ambient, 30°C. Motor is belt-coupled to pump.
Vacuum Gauge:	Indication 0 to 30 inches of mercury.
Motor and Pump Assembly Mount:	Low frequency, shock mounted plate.
Sample Inlet:	3/8-in.-OD tube on front panel for hose connection.
Sample Discharge:	3/8-in.-OD tube accessible from rear of instrument.

Instrument Assembly

Front Panel:	(in addition to MM-6 Ratemeter Controls) 1) Master switch on-off 2) Pump on-off with pilot light 3) Two fuses 4) Vacuum gauge
Check Source:	Cl^{36} source, mounted on 1-1/2-in.-diameter mylar-covered disc. Check source holder provided on inside of front panel.
Alarm Circuit:	Actuated by meter relay trip on MM-6 Transistor Ratemeter. Alarm trip indicated by 1-7/8-in.-dia. light on MAP-5 panel and internally mounted bell.
External Alarm Connection:	3-pin male Jones plug mounted on rear apron MM-6 Transistor Ratemeter.
Contacts:	Either normally open or normally closed; 5 amp 120 volts rated contact capacity.
Power Requirements (including MM-6 Transistor Ratemeter):	110/220 VAC, 60 cycle, 500 watts.
Weight:	45 pounds, including MM-6 Transistor Ratemeter.
Panel Dimensions:	19 in. wide, 10-1/2 in. high, 14 in. depth required behind panel.

PARTICULATE MONITORING EQUIPMENT SPECIFICATION SHEET MM-6

Equipment Title: MM-6 Log Transistor Ratemeter

Quantity: Eight

Specifications

Sensitivity*:	10 to 100 μa, peak pulse current. Coaxial cable runs up to 1000 feet may be made between detector and ratemeter input.
Input Impedance:	Termination is for a 93-ohm cable.
Meter:	2-1/2-in. panel mounted with alarm set meter relay, indicates counting rate in counts/min. Also has voltage scale for monitoring high voltage.
Time Constants:	The log pump time constants range from 60 sec at 20 cpm to .05 sec at 200,000 cpm.
Type of Circuitry:	Cooke-Yarborough, multiple pumps. All transistor.
Front Panel Controls	
Power Switch	
Function Switch:	(1) High voltage (2) CPM (4 decades, 20 - 200,000 cpm) (3) Calibrate
High Voltage Adjustment:	Screwdriver control
Alarm Set:	Movable pointer on meter
Alarm Reset:	Button; alarm indicator light.
High Voltage	
Range:	500 to 2500 volts adjustable.
Power Output:	0.5 watt at any voltage setting. More than sufficient to power any Tracerlab detector. Electronically regulated.
Recorder Output:	0-10 mv, full scale.
Resolution Loss:	Less than 10 per cent at 2000 cpm.
Accuracy	
Meter:	± 30% of actual count rate reading.
Recorder:	± 15% of actual count rate reading.
Electrical Connections	
Signal Input:	UG-625/U "BNC"
High Voltage:	UG-634/U "C" (also used for direct connection of G-M tube HV and Sig).
Recorder Output:	3-pin Jones.
AC In:	Standard 110 VAC male, with ground pin.
External Alarm:	3-pin Jones. Either normally open or closed. 5 amp, 120 volt contact rating.
Power Requirements:	110-130/200-260 VAC, 50-60 cycles, 15 watts.
Weight:	9 lb
Operating Temperatures:	0-50°C.

PARTICULATE MONITORING EQUIPMENT SPECIFICATION SHEET MA-1A

Equipment Title: MA-1A Filter Tape Transport Mechanism

Quantity: Two

Specifications

Paper Speed:	1 in./hr
Paper Drive:	Continuous duty motor with gear drive. Will accommodate MX-4 Motor-Actuated Filter Tape Advance.
Inlet:	1-in.-OD removable brass tube.
Outlet:	3/4-in.-OD tube (for connection to MX-14A Pumping System).
Filter Paper:	Hollingsworth and Vose HV-70, 0.009W gauze backed, 3 in. wide by 600 in. long. Three (3) rolls supplied.
Sampling Area:	2.18 sq in.
Pressure Drop Across Sampler:	4 psi at 10 cfm with clean filter.
Detector Shielding:	2 in. lead around detector at filtering aperture.
Housing:	Airtight enclosure with vacuum relief valve, rubber seal.
Mounting:	Normally mounted on MX-16A Systems Housing.
Weight:	Approximately 250 lb
Dimensions:	10-7/8 in. x 7-1/2 in. x 27-3/4 in. long (plus underhang).

PARTICULATE MONITORING EQUIPMENT SPECIFICATION SHEET MD-1A

Equipment Title MD-1A Beta-Gamma G-M Detector Assembly

Quantity Two

Specifications

Type:	Helium-filled end window G-M tube (Tracerlab TCG-1)
Window:	Mica - less than 4 mg/cm^2 thickness.
Quench:	Internal organic.
Plateau Length:	Not less than 300 volts.
Plateau Slope:	Not more than 1-1/2 per cent per 100 volts
Life:	Greater than 10^8 counts.
Recovery Time:	Approximately 200 μsecs.
Background:	Approximately 25 cpm when shielded by 2 in. of lead.
Connector:	UG-631/U "C"
Operating Voltage:	Approximately 1450 (specified for each tube by factory.)
Operating Temperatures:	$100^{\circ}F$, maximum
Housing:	(a) Anodized Aluminum wall surrounds detector. (b) At window end a 0.9 mg/cm^2 Mylar dust-cover protects tube. (c) Bleed holes provided to equalize pressure.
Weight:	7 lb
Dimensions:	2-1/2 in. OD x 9 in. long.

PARTICULATE MONITORING EQUIPMENT SPECIFICATION SHEET MX-14A

Equipment Title	MX-14A Pumping System
Quantity	Two
General Description	The MX-14A includes an air pump, a flow meter, a control valve, and necessary internal piping to maintain air or gas flow in the MAP-1A system. It is designed for installation into the MX-16A.

Specifications

Air Pump:	Miehle-Dexter Sliding Dri-Vane. Capacity of 10 cfm, continuous at 14 in. Hg vacuum.
Exhaust Mufflers:	One provided
Motor:	3/4 hp, 50 or 60 cycle, 110 VAC, sealed ball bearing.
Flow Meter:	Calibrated orifice type with direct reading, panel-mounted gauge, 0-10 scfm.
Internal Piping:	All interconnections provided with durable rubber tubing.
Outlet:	3/4-in. female, NPT.
Controls:	On-Off pump switch mounted on MX-16A Systems Housing.
Indicators:	White panel light on panel of MX-16A indicates pump on or off.
Weight:	105 lb

PARTICULATE MONITORING EQUIPMENT SPECIFICATION SHEET MX-16A

Equipment Title	MX-16A Systems Housing
Quantity	Two
General Description	The MX-16A is an industrial housing mounted on casters. The front surface is sloped to facilitate reading the indicating instruments. The MX-16A is manufactured of angle iron, while the instrument section is fully enclosed in sheet steel to provide a dust-proof environment for these components. The MX-16A will house MM-6 Ratemeter with one miniature strip chart recorder. It also houses the MA-1A Sampler.

Specifications

Construction:	Angle iron framework. 3/8-in.-thick steel base. 16-gauge paneling.
Weight:	Approximately 220 lb
Dimensions:	Length 32 in., width 24 in., height 34 in.

PARTICULATE MONITORING EQUIPMENT SPECIFICATION SHEET MX-1

Equipment Title MX-1 Air Flow Alarm

Quantity Two

Specifications

Main Components:	Vacuum switch with high and low limits, alarm light.
Operation:	The vacuum switch limits are factory adjusted to give a warning signal whenever the pressure drops below the operating level, thus indicating a low flow condition. When used in conjunction with the MA-1A, a warning is given also whenever the pressure increases to atmospheric, indicating abnormally high flow rate.
Range:	0.1-30 in. Hg vacuum.
Indication:	Red pilot light.
Mounting:	Indication on panel of MX-16A Remote Control Panel. Pressure switch connected to MX-14A Pumping System.

PARTICULATE MONITORING EQUIPMENT SPECIFICATION SHEET MX-9

Equipment Title	MX-9 Check Source and Mechanism
Quantity	Two
General Description	The MX-9 assembly provides a positive and reproducible means of positioning a radioactive source in front of a detector on the various liquid, gas, and airborne particulate samplers. The source is automatically brought into position by a solenoid-operated mechanism.
Specifications:	MX-9 β-γ
Gamma:	Cs^{137}
Source:	9 μc Cs^{137} (0.662-Mev Gamma 0.51-Mev Beta)
External Radiation:	5 mr/hr, maximum, at housing surface
Solenoid:	1-in. stroke, continuous duty
Housing:	5-1/2 in. x 2-1/2 in. x 3-3/4 in. sheet metal box
Indicator:	Amber panel light, mounted on MX-16A or MX-19A
Power Requirements:	110 V, 60 cycles from ratemeter.
Mounting:	On sampler; such as MA-1A, MG-1A, MG-2, MW-2, etc.
Activity Decay Curve:	Provided with source, part of operating manual
AEC License:	Not required
Control:	On-Off switch mounted on MX-16A or MX-19A

GAS SAMPLER SPECIFICATION SHEET MG-1A

Equipment Title	MG-1A Gas Sampler (Scintillation Type, Gamma)
Quantity	Two

Specifications

Gas Chamber:	6-5/8-in.-dia. x 7-in.-long aluminum cylinder with 1-in.- OD inlet and outlet tubing. 1/8-in.-thick aluminum well wall for detector.
Sample Volume:	0.1 ft^3.
Detector Provision:	Specifically for MD-5A Gamma Scintillation Detector Assembly.
Detector Mounting:	Secure clamp-flange.
Gas Connections:	1-in. compression fittings for tubing.
Shielding:	3 in. of lead.
Temperature:	160°F, maximum (limited by detector).
Pressure:	160 psig, maximum; will stand full vacuum.
Weight:	Approximately 590 pounds.
Dimensions:	20 in. x 16 in. x 18 in. high, over-all.

GAMMA SCINTILLATION DETECTOR SPECIFICATION SHEET MD-5A

Equipment Title: MD-5A Gamma Scintillation Detector Assembly

Quantity: Two

Specifications

Resolution:	Better than 10% for Cesium^{137}.
Crystal:	1-1/2 in. dia. x 1 in. sodium iodide, thallium-activated.
Photomultiplier:	DuMont 6292, with mu-metal shield.
Efficiency:	Dependent upon energy of incident radiation.
Operating Voltage:	750-1800 volts.
Output:	Negative.
Connectors:	High Voltage: UG-634/U"C".Signal: UG-625/U"BNC".
Background:	Approximately 75 cpm in 4 in. of lead shielding for energies of 100 kev or greater.
Operating Temperature:	160°F, maximum.
Housing:	Anodized aluminum cylinder, watertight at connector and crystal ends.
Weight:	11 pounds.
Dimensions:	2-1/2 in. dia. x 11-1/2 in. long.

MAP-1/MGP-1 RECORDER SPECIFICATION SHEET (DeVar)

Equipment Title 2 Pen Transistorized Recorders

Quantity Three

Specification

Chart Width:	4 in.
Chart Speed:	3/4 in./hr
Record Visibility:	6 in. minimum.
Chart Drive:	Daily tear-off, with simplified rethreading.
Number of Pens:	1, 2 or 3, writing full width.
Chart Marking:	Rectilinear
Mounting:	Flush Panel
Inking:	Minimum 30 day supply for each pen, capillary inking, 2 colors.
Span and Suppression:	Front adjustable, each channel.
Pens:	Two (2)

5. Nuclear Accident Dosimeter (NAD) System

A Nuclear Accident Dosimeter (NAD) system is provided which detects neutron and gamma dose in the event of a nuclear excursion. The dosimeter system, which is sealed in a 4-in. diameter by 11-in. long stainless steel outer container, is mounted on the outside of the dome of the containment building near the 80-ft elevation and at an angular position such that it is within 40 ft of the working area immediately above the reactor pressure vessel and within 50 ft of the center of the reactor core itself. The design of the mounting bracket permits removal of the dosimeter for analysis from ground level outside of the containment building. This mounting arrangement will allow recovery of the dosimeter within the required 7-hr period after an accident.

Basically, the dosimeter consists of threshold detectors for determining the total neutron dose in the presence of gamma rays and chemical detectors for determining the gamma-ray dose in the presence of neutrons.[1] The threshold detector allows measurement of the number of neutrons in five energy regions (fast flux). The thermal flux is determined by exposing gold and gold surrounded with cadmium and taking the difference in gold activation. The fast flux is determined by use of plutonium-239, neptunium-237, uranium-238, and sulfur-32 which provide measurements of the flux above 1 kev, 0.75 Mev, 1.5 Mev, and 2.5 Mev, respectively (Pu-239, Np-237, and U-238 foils are housed in a B-10 shield). From these flux measurements, the total neutron dose is obtained by counting the various foils on scintillation counters, as described in ORNL-2748.

The chemical dosimeter system used to measure the gamma component in a mixed radiation field covers an over-all dose range of approximately 25 rads to 100,000 rads. The system consists of tetrachloroethylene which is housed in a lithium container and which contains a small amount of free radical chain reaction retarder overlayered with an aqueous phase containing a pH indicator. Chemical chain reactions induced by radiation liberate water-soluble acids; the amount of acid formed is directly proportional to dose, within a given discrete dose range. The response may be evaluated by titration of the acid produced, by change in conductivity of the solution, or by change in pH as measured electrometrically or colorimetrically.

---

1. Hurst, G. S., and Ritchie, R. H., ed., Radiation Accidents: Dosimetric Aspects of Neutron and Gamma-Ray Exposures, ORNL-2748, Part A, Oak Ridge National Laboratory, November 29, 1959.

Table 802-5 FUEL-ELEMENT FAILURE DETECTION EQUIPMENT SPECIFICATION SHEETS

This table is made up of the following specification sheets:

Specification Sheet No.	Equipment Description
MD-5	Sodium Iodide Scintillation Detector
RLDM-3-V6	Collimating Shields
RM-40	Dual Power Supplies
404M	Fluke Detector Power Supplies
RM-10RS	Linear Ratemeter
MX-25D	Difference Circuit
Model S	Fuel-Element Failure Detection System Recorder

FUEL-ELEMENT FAILURE DETECTION EQUIPMENT SPECIFICATION
SHEET MD-5

Equipment Title MD-5 Sodium Iodide Scintillation Detector

Quantity Two

Specifications

Resolution:	Better than 10 per cent for Cs^{137}
Crystal:	1-1/2 in. dia. x 1 in. sodium iodide, thallium activated
Photomultiplier:	DuMont 6292, with mu-metal shield
Efficiency:	Dependent upon energy of incident radiation
Operating Voltage:	750 to 1800 volts
Output:	Negative
Connectors:	High voltage: UG-634/U "C" Signal: UG-625/U "BNC"
Background:	Approximately 75 cpm in 4 in. of lead shielding for energies of 100 kev or greater
Operating Temperature:	160°F, maximum
Housing:	Anodized aluminum cylinder, watertight at connector and crystal ends
Weight:	11 lb
Dimensions:	2-1/2 in. dia. x 11-1/2 in. long

FUEL-ELEMENT FAILURE DETECTION EQUIPMENT SPECIFICATION
SHEET RLDM-3-V6

Equipment Title RLDM-3-V6 Collimating Shield

Quantity Two

Specifications

Type:	Tracerlab RLDM-3-V6
Construction:	Minimum 2-in. lead shielding in all directions. Shock-resistant detector securing flange. Provides for variable detector geometry. Custom designed collimating aperture.
Mounting:	Freestanding for mounting external to pipe

Equipment Title RM-40 Dual Power Supply

Quantity 2

Specifications

Controls: - Front Panel

Main Power Switch:	Pilot lights when instrument is ON.
High Voltage Switch:	Pilot lights when high voltage is ON.
High Voltage Adjust:	Two (2) recessed screwdriver adjustments for high voltage.
Alarm Reset:	Turn OFF alarm lights on front panel; allows alarm function to operate again (one alarm light per ratemeter).
Controls: - Chassis Mounted:	Two (2) GM-SCINT Switches (one for each input) for choice of Geiger of Scintillation input. -22 adjust potentiometer for setting of -22 transistor supply voltage. -22 line compensator. Achieves exact balance of -22 regulator so that optimum line voltage stabilization is achieved.
H.V. Range Switch:	Selects one of three (3) H.V. ranges (see H.V. Supply Specifications).
High Voltage Supply:	Positive voltage available at two separate connectors. The H.V. Power Supply has three (3) ranges: 500 V to 1000 V, 750 V to 1500 V, and 1250 V to 2500 V. The range is selected by a switch located at the rear of the Power Supply Chassis. Both connectors are always on the same range but are individually set by front panel screwdriver adjustments.
Power Out:	5/10 watt total from the two outputs.
Stability:	Line: Less than 1 per cent between 100 to 130-V line. Electronically regulated low voltage supplies.
Power Requirements:	100 to 130 VAC, 60 cycle, 25 watts.
Operating Temperatures:	0 to 50°C
Connectors:	"A" GM-HV: Supplies HV to Scintillation Detector or supplies HV and accepts negative signal from GM detector "C"-type connector. "A" SCINT: Accepts negative signal from scintillation detector. "BNC"-type connector. "B" GM-HV: Supplies HV to Scintillation Detector or supplies HV and accepts negative signal from GM detector. "C"-type connector. "B" SCINT: Accepts negative signal from scintillation detector. "BNC"-type connector.
Alarm Output:	8-pin Jones carrying one SPDT contact set from "A" ratemeter and one from "B" ratemeter. "A" 10MV Recorder Output: 3-pin Jones. "B" 10 MV Recorder Output: 3-pin Jones.
Weight:	31 lb
Dimensions:	7 in. x 19 in. panel for standard rack mounting. Depth behind panel approx. 15 in. in front of panel, approx. 1-1/2 in.

FUEL-ELEMENT FAILURE DETECTION EQUIPMENT SPECIFICATION
SHEET 404M

Equipment Title 404M Fluke Power Supply

Quantity Two

Specifications

Model:	Fluke No. 404M
Output Voltage:	500 to 2000 volts dc.
Output Current:	0 to 5 ma at 500 to 1500 volts; 0 to 2 ma at 1500 to 2000 volts
Output Polarity:	Positive or negative with respect to chassis
Regulation vs. Line:	.01% maximum from 100 to 130 volts
Regulation vs. Load:	.01% maximum for 2 ma change
Stability:	.005% per hour, .05% per day
Ripple:	Less than 5 mv RMS
Calibration Accuracy:	Better than 1%
Size and Weight:	Std. 19 in. W Rack x 7 in. H x 13 in. D. 27 lb

Equipment Title RM-10RS Linear Ratemeter

Quantity 4

Specifications

Sensitivity:	10 to 100 μa, peak pulse current for pulse rise times of less than 0.2 μsec. Coaxial cable runs up to 1000 feet may be made between detector and ratemeter input.
Input Impedance:	Termination is for 93-ohm cable.
Meter:	4-1/2-in. panel mounted, indicates counting rate directly in counts per minute with the following seven (7) ranges: 0 to 50 cpm, 0 to 250 cpm, 0 to 500 cpm, 0 to 2500 cpm, 0 to 5000 cpm, 0 to 50,000 cpm, and 0 to 500,000 cpm. Smallest scale division is 1 cpm on the 50-cpm range. Also has voltage scale for reading high voltage.
Time Constants:	Three (3), 1/2 sec, 5 sec, 1 min.
Front Panel Controls:	(a) Meter scale selector switches to any one of the above seven cpm scales, high voltage, or test. An internal 3600-cpm (line frequency) test signal is available for calibration checking. (b) Time Constants: Three (3), 1/2 sec, 5 sec, 1 min.
Recorder Output:	10 mv full scale is supplied.
Accuracy:	(a) Meter: $\pm$ 5% of full scale. (b) Recorder Output: $\pm$ 5% of the actual cpm reading for 10 to 100% of full scale. (Recorder full scale count rate is the same as shown on the meter scale selector switch.)
Meter Relay	Used to preset alarm and actuate external alarm. Alarm level visible and adjustable from front panel.
Output:	A set of relay contacts rated at 5 amp resistive, 115 volts ac, either open or closed for external alarm actuation (SPDT).
Alarm Reset:	Manual reset of light and external relay provides "memory." Meter relay automatically resets to permit meter to read cpm below alarm point.

Spectrometer Input Circuit
(Differential Pulse Height Analyzer)

Input Sensitivity:	Minimum detectable input current pulse is 1.0 μa.
Gain:	Adjustable by 10-position switch (located on the spectrometer card) over a range of 10 to 1.
Window:	Adjusted in width by means of a switch to the following percentages of the amplifier maximum output of 10 volts: 2, 5, 10, 15, 20, 30, 50, 75 and 100. In addition, an "integral" position is provided. This position provides operation with a single adjustable threshold level.
Threshold:	Adjusted by ten-turn potentiometer with a 3 significant figure dial to any desired value from less than 5 to 100 per cent of full scale.
Integral Linearity:	$\pm$ 3%.
Differential Linearity:	$\pm$ 10% for a 10% window.

FUEL-ELEMENT FAILURE DETECTION EQUIPMENT SPECIFICATION
SHEET MX-25D

Equipment Title MX-25D Difference Circuits

Quantity Two

Specifications:

Construction:	Sheet metal enclosure
Input:	(Two) proportional to count rate of RM-20RS linear ratemeter
Output:	Ratio signal proportional to input No. 1 less input No. 2. (Output to drive 10-mv high input impedance recorder)

FUEL-ELEMENT FAILURE DETECTION EQUIPMENT SPECIFICATION SHEET MODEL S

Equipment Title: Fuel-Element Failure Detection System Recorder

Quantity: One

Specifications

Catalog:	69955-P2-P4-P11-C24-P12-E5 Speedomax Type G Model S Indicating Recorder X_1 - X_2, 2-pen
Type:	DC potentiometer two-pen curve drawing
Record:	Continuous lines
Ranges:	0-10 mv each pen
Scale:	20 to 200,000 counts/min
Chart No.:	804
Balancing Speed:	3 sec
Current standardization:	Regulated voltage supply
Power Supply:	120 volts 60 cycles
Case:	Metal with gasketed door for flush mounting

Features and Accessories

1. Chart tear-off device.
2. Rubber stamp, bracket and chain.
3. Legend Plate.
4. Illumination. Fluorescent.

Table 802-6 PERSONNEL SAFETY MONITORING EQUIPMENT SPECIFICATION SHEETS

This table is made up of the following specification sheets:

Specification Sheet No.	Equipment Description
SU-1H	Beta-Gamma Survey Meter
SM-136A	Alpha-Beta-Gamma G-M Survey Meter
HRJ-6	Juno High Range Survey Meters
FNS-113	Fast-Neutron Survey Meter
SN-87	Slow-Neutron Survey Meter
ALM-2X	Hand and Foot Monitors

PERSONNEL SAFETY MONITORING EQUIPMENT SPECIFICATION SHEET SU-1H

Equipment Title: SU-1H Beta-Gamma Survey Meter

Quantity: Three

Specifications

Ranges:	15,150,1500 mr/hr and 140 mr full-scale reading
Time Constant:	Approximately 4 sec on all three ranges
Zero Drift:	Less than 5 per cent of full scale per 8-hr operation
Ionization Chamber:	Cylindrical geometry, 1/8-in. bakelite, 3-in. D x 6-in. Aquadag inner coating. Chamber volume approximately 0.4 liters
Meter:	3-in. rectangular meter with special damping characteristics
Calibration:	Instrument calibrated at factory with gamma radiation from Cobalt-60
Accuracy:	± 10 per cent of full scale on all scale ranges
Controls:	(a) "ON-FILAMENT-OFF" Switch: turns instrument on to warm up or operating position. (b) "ZERO" switch: zeros the meter, is provided with guard ring to avoid accidental shifting of zero set. (c) "SELECTOR" switch: chooses one of four scale ranges or zero set position.
Beta Window:	0.8 mg/cm aluminized Mylar window may be covered by rotary shield to cut out beta radiation
Energy Dependence:	Within ± 15 per cent for gamma or X-rays from 100 kev to approximately 2 Mev. Not recommended for measuring X-rays below 75 kev effective
Battery Life:	Approximately 800 operating hours for all batteries. Shelf life about one year
Equipment Supplied:	(a) Complete battery back in plexiglass box (b) Instruction manual
Finish:	Dark gray-blue
Dimensions:	12 in. x 10 in. x 3 in. including chamber and pistol grip

PERSONNEL SAFETY MONITORING EQUIPMENT SPECIFICATION SHEET SM-136A

Equipment Title	SM-136A Alpha-Beta-Gamma Survey Meter With P-136W Probe
Quantity	Three

Specifications

Ranges:	0.5, 5.0, 50 mr/hr, and 500, 5000, and 50,000 cpm
Switch Positions:	Off, X100, X10, and X1
Accuracy:	± 10 per cent on cpm ranges; ± 10 per cent on mr/hr ranges for gamma rays from radium
Controls:	Single knob turns on instrument and selects one of the dual ranges
Indicator:	Large, easy-to-read hermetically sealed meter calibrated in mr/hr from 0 to 0.5, with markings in corresponding readings of cpm. Simple ear-type high impedance headphone
Batteries:	Five standard flashlight 1-1/2 volt "D" cells. Operating life over 250 hr.
Calibration:	Internal calibration source supplied to check accuracy of instrument
Dimensions:	7-1/2 in. x 3-1/2 in. x 3-1/2 in.
Weight:	4-1/2 lb

PERSONNEL SAFETY MONITORING EQUIPMENT SPECIFICATION SHEET HRJ-6

Equipment Title HRJ-6 Juno High Range Survey Meter

Quantity Two

Specifications

Ionization Chamber:	Volume: 27 cu in. Window Opening: 3 in. x 4-5/8 in. Alpha Screen: 0.3 mil (0.45 mg/cm^2) rubber hydrochloride Alpha Rejection Absorber: 0.01-in. cellulose acetate sheet Beta Rejection Absorber: 0.102-in. aluminum
Batteries:	4 Eveready No. 412, 22-1/2 Volt "B" Batteries 2 Eveready No. E12, 1.35 Volt "A" Batteries 2 Mallory No. TR-115, 6.5 Volt "B" Batteries
Tube:	1 Sub-Miniature Electrometer Type CK 5886
Ranges:	Model HRJ-6 Juno (high range): 250, 2500, 25,000 mr/hr full-scale. (Improved A.E.C. Model SIC-17D).
Case:	Hard-chrome plated aluminum, with engraved markings on top of case; gasketed, dust- and moisture-resistant. Dimensions: 9-1/2 in. x 5-3/4 in. x 4 in.
Handle:	Aluminum, especially cast low-porosity, smoothly polished
Weight:	Net 6 lb 11 oz. Shipping: 10 lb

PERSONNEL SAFETY MONITORING EQUIPMENT SPECIFICATION SHEET FNS-113

Equipment Title	FNS-113 Fast-Neutron Survey Meter
Quantity	One

Specifications

Ranges:	5, 50, and 500 mrep/hr, and 200 integrated total count (approximately 0.5 mrep)
Response:	Proportional to tissue sensitivity: 0.2 to 10 Mev.
Batteries:	Ten size "D" flashlight cells
Weight:	6 lb
Dimensions:	Circuit case 10 in. x 4-3/4 in. x 5-5/8 in. high (including handle). Probe 9-3/4 in. x 2 in. OD

PERSONNEL SAFETY MONITORING EQUIPMENT SPECIFICATION SHEET SN-87

Equipment Title SN-87 Slow-Neutron Survey Meter

Quantity One

Specifications

Ranges:	0-15, 0-150 mrem/hr
Time Constant:	Less than 1 sec
Controls:	7-position function switch Position 1 - ON-OFF Position 2 and 3 - Battery checks Position 4 - Zero set Position 5 and 6 - Range positions Position 7 - Calibration
Zero Set:	A control near the handle sets the electrical zero of the meter
Power Supply:	Five standard hearing aid and transistor batteries: 2 - Mallory RM-12 1.3 volts 1 - Eveready 430 30 volts 1 - Eveready 413 30 volts 1 - Eveready 411 15 volts
Calibration:	An internal Sr^{90} foil operates a shutter in position 7 to check the functioning of the unit.
Dimensions:	9-1/2 in. x 5 in. x 8-1/2 in.
Weight: (with batteries)	7 lb

PERSONNEL SAFETY MONITORING EQUIPMENT SPECIFICATION SHEET ALM-2X

Equipment Title	ALM-2X Hand and Foot Monitor With External Frisking Probe
Quantity	Two

Specifications

Tolerance Levels:	Adjustable over entire counting range
Calibration:	20 cpm to 10,000 cpm
Power Requirement:	300 watts, 115 volt, 60 cycle AC
Dimensions:	65 in. x 27 in. x 18 in.
Shipping Weight:	450 lb
External Probe:	Included for checking clothing, hair, face, etc. is an external probe with 5-ft-self-coiling cable and felt-lined probe holder. The probe has a revolving shield which exposes a 180° angle to permit entry of Beta radiation. The probe is actuated by a switch on the righthand side, and the count is read on the righthand meter. The automatic colored light sequence is not operative when the external probe is being used.
Sensitivity:	Minimum Beta energy 0.2 Mev
Tolerance Levels:	Adjustable over entire counting range
Calibrations:	20 cpm to 10,000 cpm - hands; 200 cpm to 100,000 cpm - feet
Power Requirement:	300 watts, 115 volt, 60 cycle DC
Dimensions:	Cabinet 65 in. x 27 in. x 18 in. Foot deck 27 in. long x 20 in. x 5 in.
Shipping Weight:	650 lb

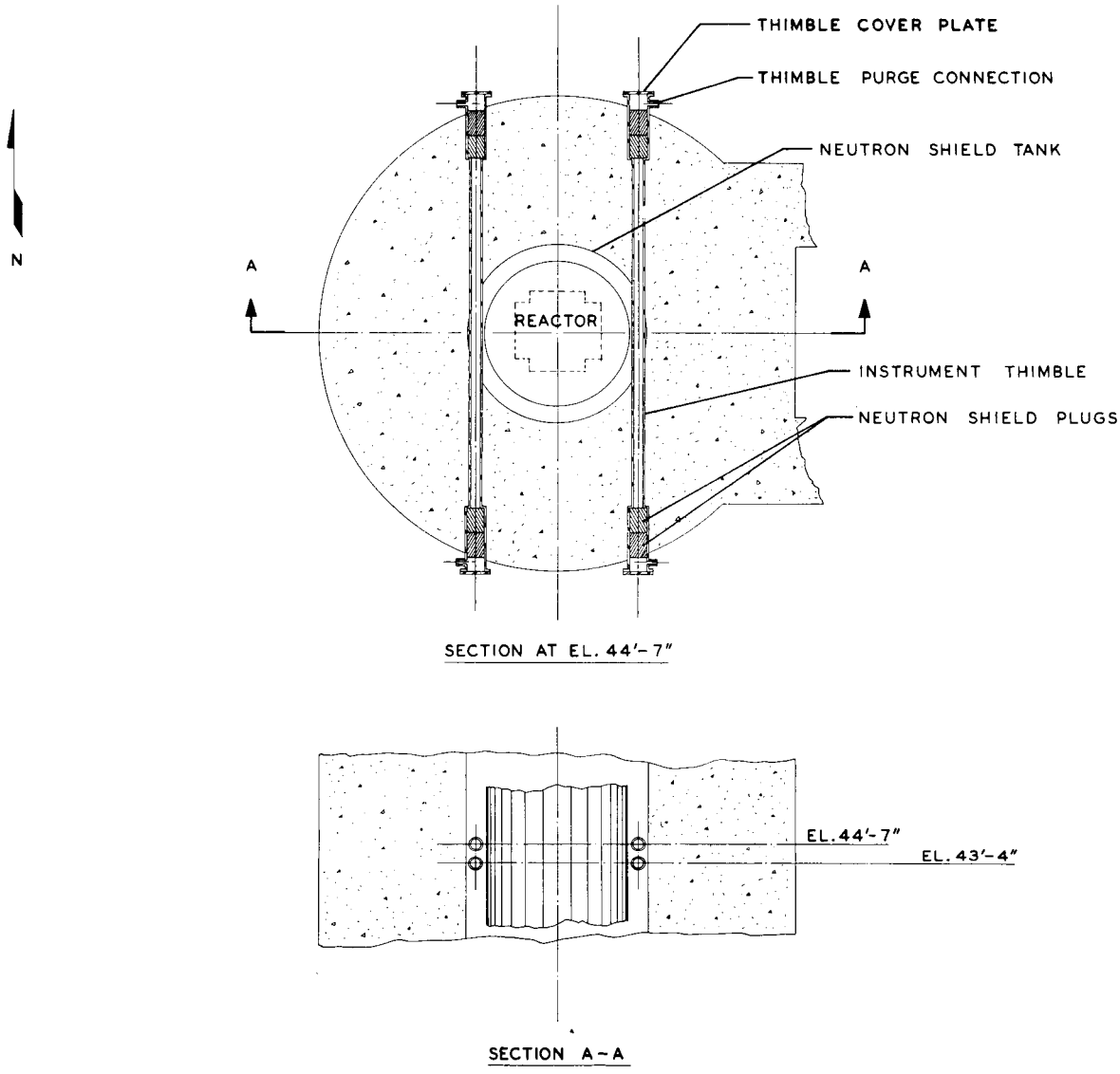

Fig. 802-1 Instrument thimble locations.

PER UNIT POWER	WATTS	FLUX AT INSTR. $n/cm^2/sec.$**	CHAMBER AMPS.*	CHANNEL NO. 1	2	3	4	5	6	7	8	9	10
		FLUX SOURCE RANGE FLUX		SOURCE		LOG N & PERIOD		$\mu\mu$A		SAFETY TRIP		GALVA-NOMETER	
1.0	5×10^7	5×10^8	5×10^{-6}	—	—								
10^{-1}	5×10^6	5×10^7	5×10^{-7}										
10^{-2}	5×10^5	5×10^6	5×10^{-8}										
10^{-3}	5×10^4	5×10^5	5×10^{-9}										
10^{-4}	5×10^3	5×10^4	5×10^{-10}										
10^{-5}	5×10^2	5×10^3	5×10^{-11}										
10^{-6}	50	5×10^2	5×10^{-12}										
10^{-7}	5	50	5×10^{-13}										
10^{-8}	0.5	5	5×10^{-14}										
10^{-9}	0.05	0.5	5×10^{-15}										

* BASED ON A CHAMBER SENSITIVITY OF 10^{-14} Amp/nv

** FLUX IN SOURCE RANGE CHANNELS ONLY, ALL OTHER CHAMBERS WILL BE LOCATED IN THE INSTRUMENT THIMBLES TO PROVIDE ONE DECADE OVERLAP

Fig. 802-2 Nuclear instrumentation system and operating ranges.

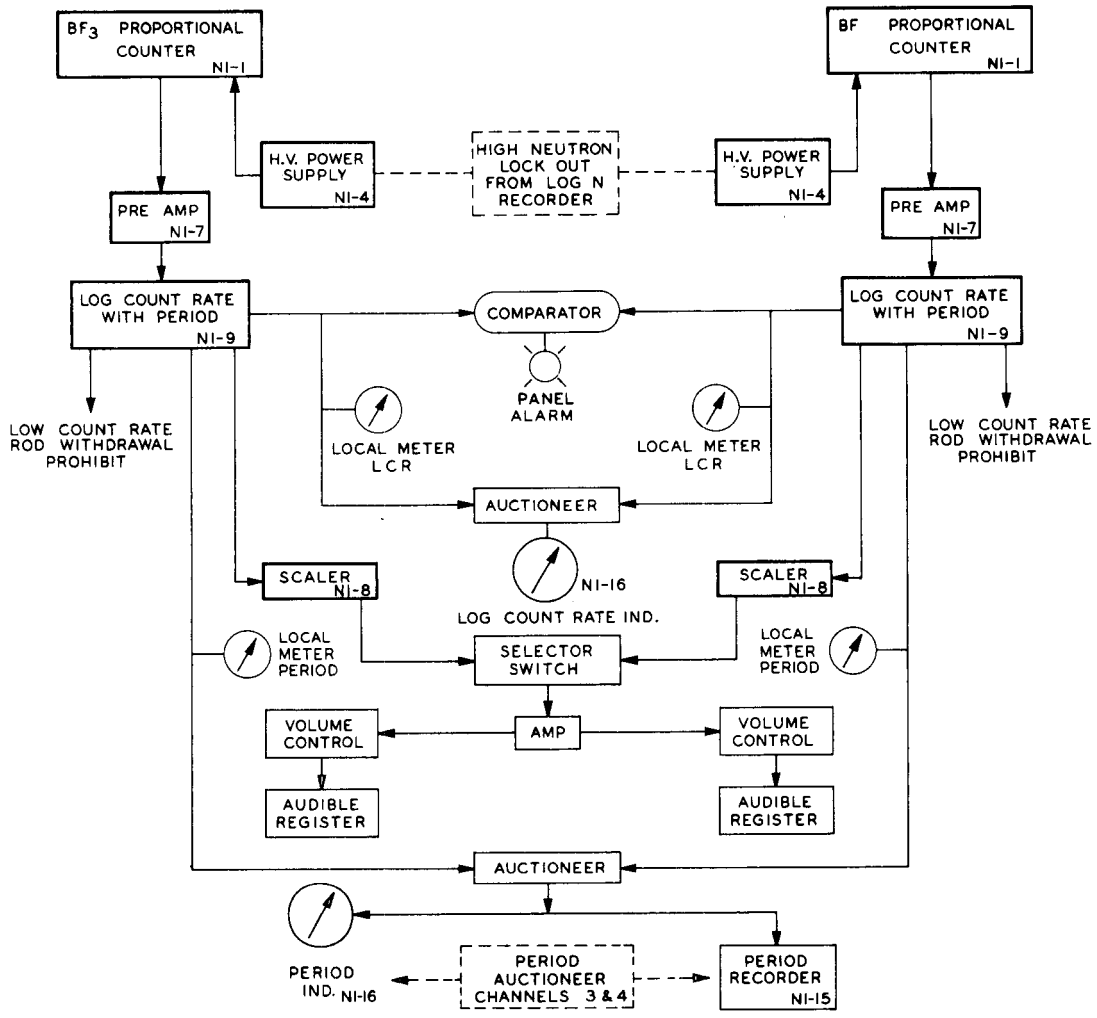

Fig. 802-3 Block diagram of the source-range channel instrumentation.

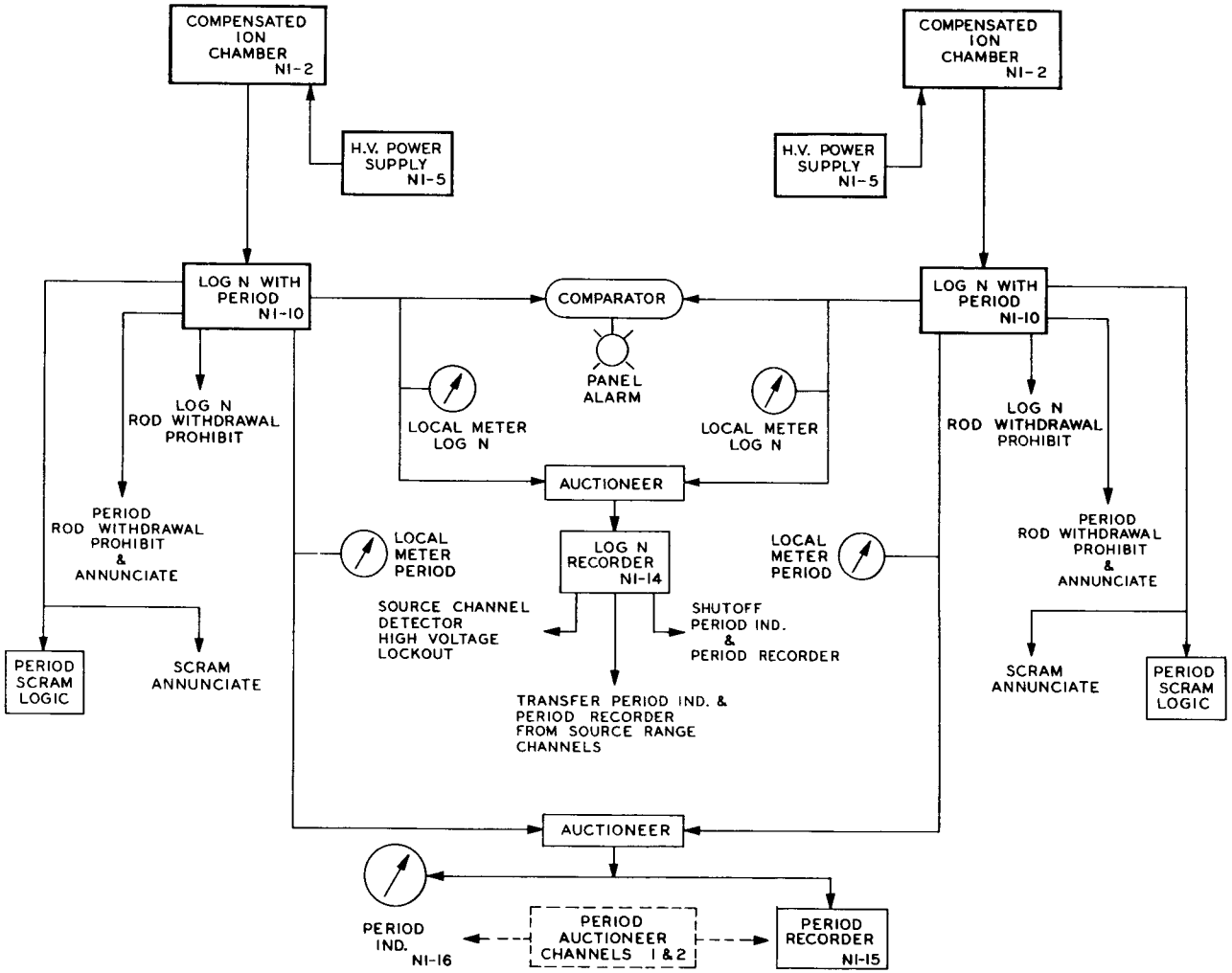

Fig. 802-4 Block diagram of the intermediate-range channel instrumentation.

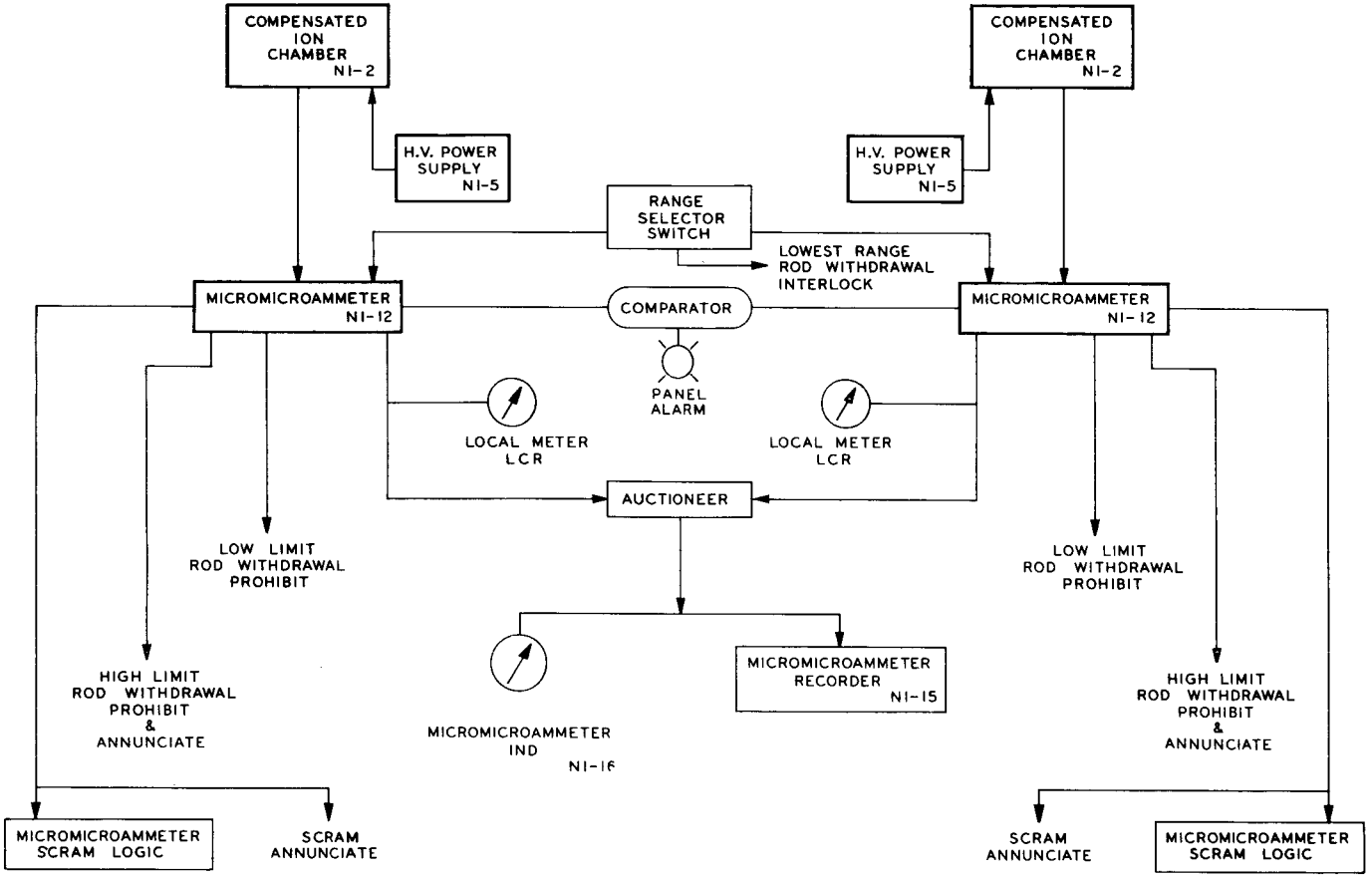

Fig. 802-5 Block diagram of micromicroammeter channels 5 and 6.

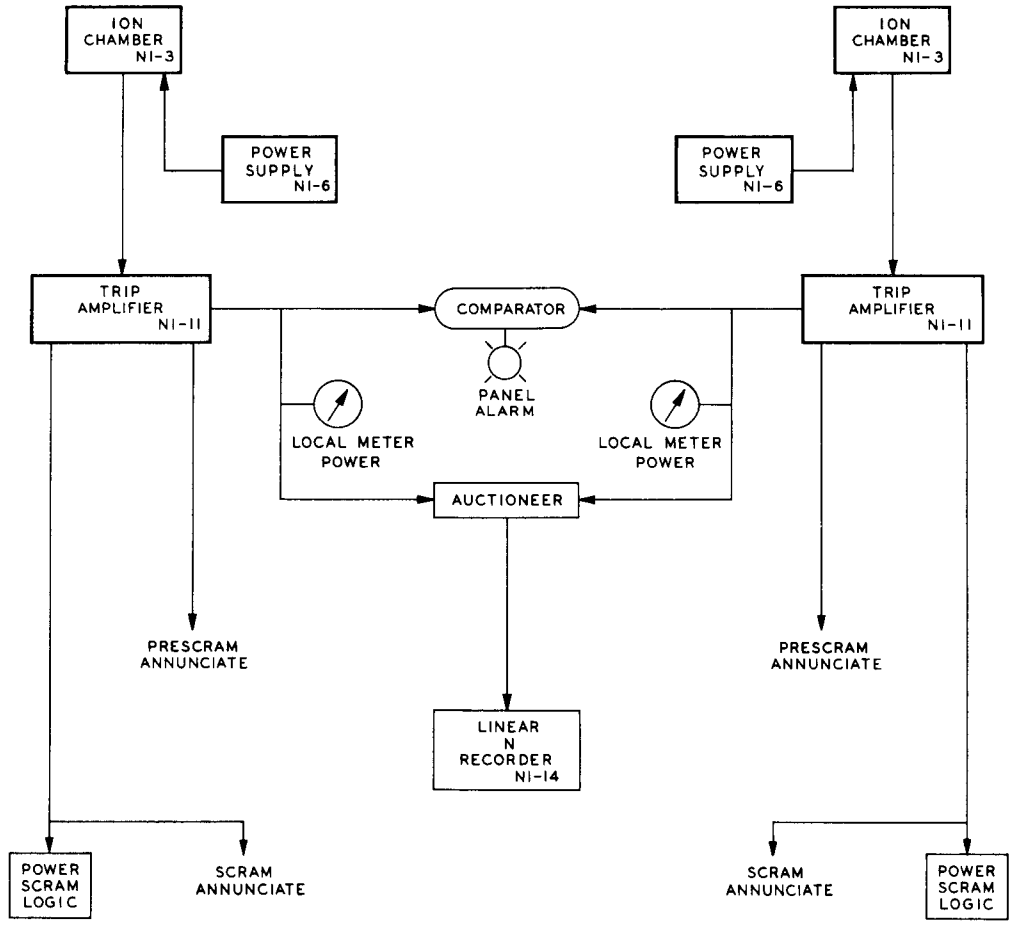

Fig. 802-6 Block diagram of power range safety channels 7 and 8.

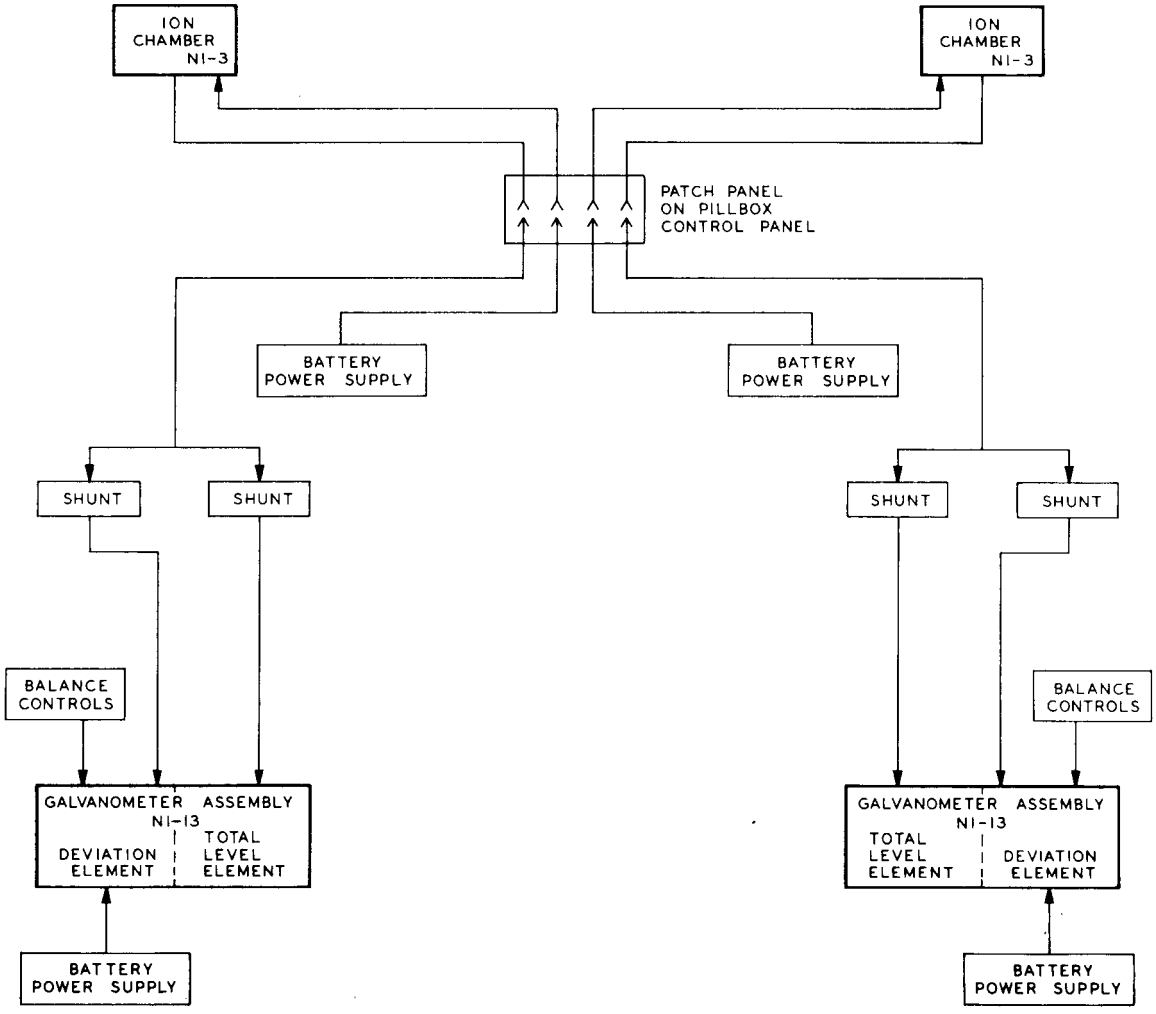

Fig. 802-7 Block diagram of galvanometer channels 9 and 10.

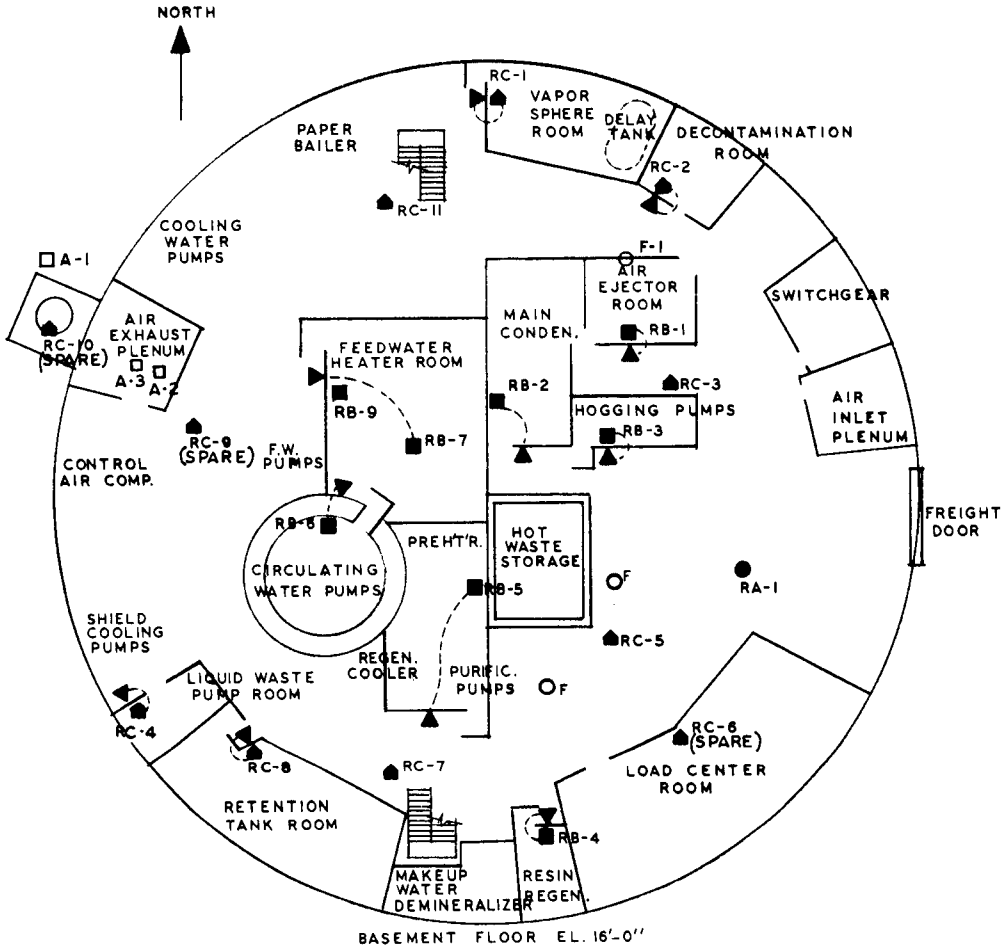

	Control Room Ind. & Rec.	Warning Light	Remote Ind. & Light
RC-1	X	X	X
RC-2	X	X	X
RC-3	X	X	-
RC-4	X	X	X
RC-5	X	X	-
RC-6		Spare Location	
RC-7	X	X	-
RC-8	X	X	X
RC-9		Spare Location	
RC10		Spare Location	
RC11	X	X	-
RB-1	X	X	X
RB-2	X	X	X
RB-3	X	X	X
RB-4	X	X	X
RB-5	X	X	X
RB-6	X	X	X
RB-7	X	X	X
RB-9	X	-	-
RA-1	Pillbox Ind. Only	-	-
A-1	X	-	-
A-2	X	X	-
A-3	X	X	-
F-1	X	-	-

▲ REMOTE INDICATOR

● RA 0.005 R/HR TO 5000 R/HR MONITORING STATION

■ RB 0.01 MR/HR TO 10 R/HR MONITORING STATION

◆ RC 0.01 MR/HR TO 100 MR/HR MONITORING STATION

○ F FUEL FAILURE DETECTING SYSTEM (PLUG-IN STATIONS)

□ A AIR PARTICULATE MONITORING

Fig. 802-8 Location of area radiation monitoring system.

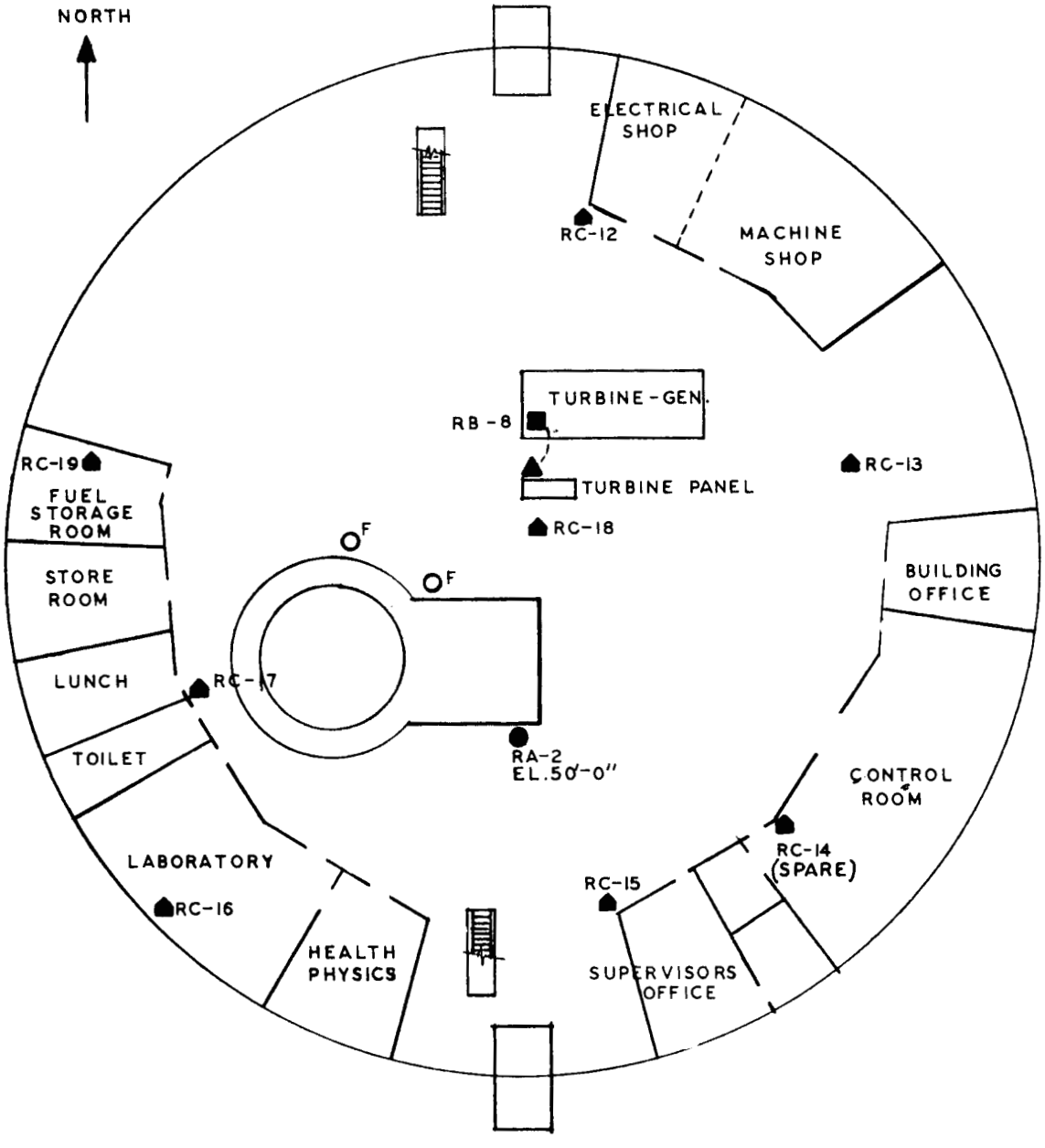

OPERATING FLOOR EL. 37'-4"

	CONTROL ROOM IND. & REC.	WARNING LIGHT	REMOTE IND. & LIGHT
RC-12	X	X	—
RC-13	X	X	—
RC-14	SPARE	SPARE	—
RC-15	X	X	—
RC-16	X	X	—
RC-17	X	X	—
RC-18	X	X	—
RC-19	X	X	—
RB-8	X	—	X
RA-2	PILLBOX IND. ONLY	—	—
F	X	—	—

Fig. 802-9 Location of area radiation monitoring system main floor level.

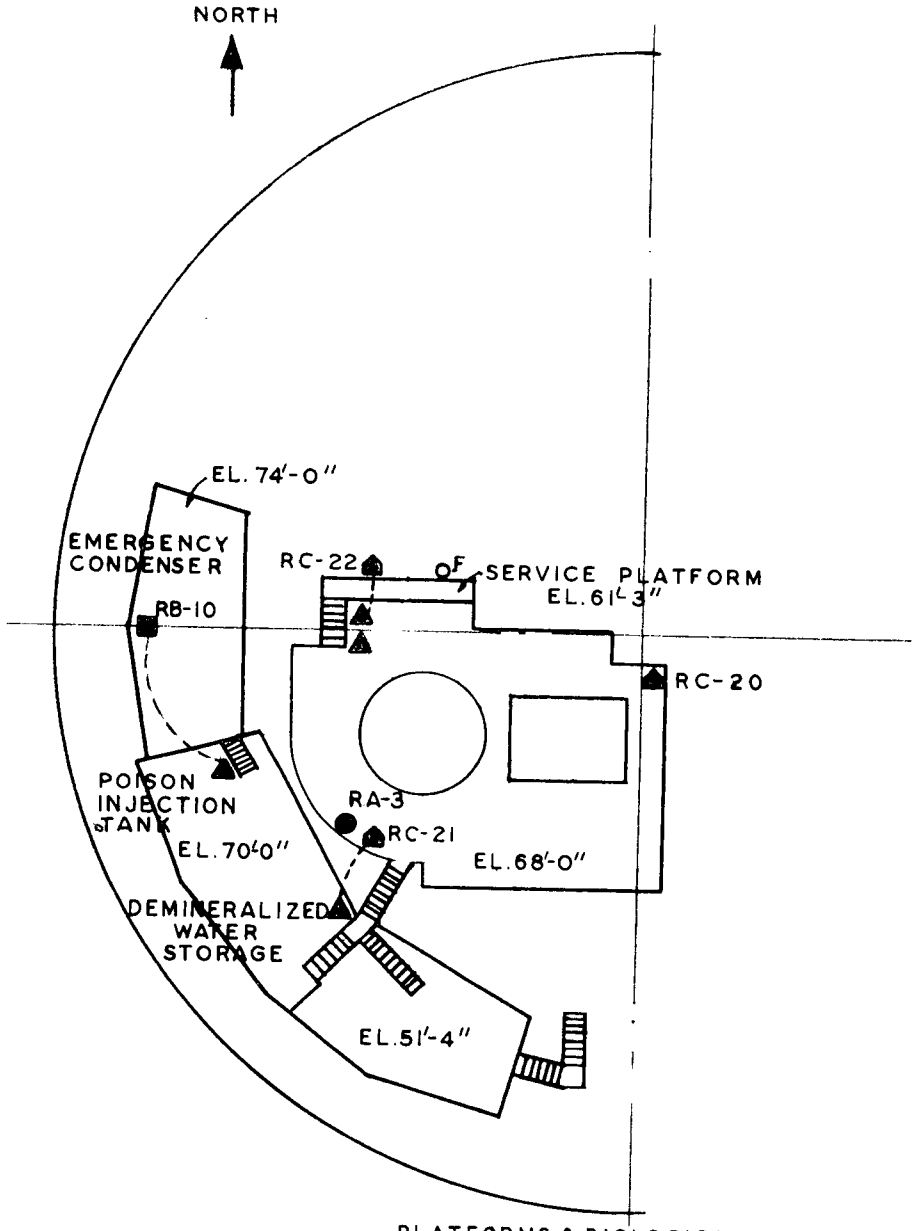

	CONTROL ROOM IND.& REC.	WARNING LIGHT	REMOTE IND. & LIGHT
RC-20	X	X	—
RC-21	X	X	X
RC-22	X	X	X
—	—	—	—
RB-10	X	X	X
RA-3	PILL BOX IND. ONLY	—	—
F	X	—	—

Fig. 802-10 Location of area radiation monitoring stations on reactor floor level (68 ft, 0 in.) and adjacent platforms.

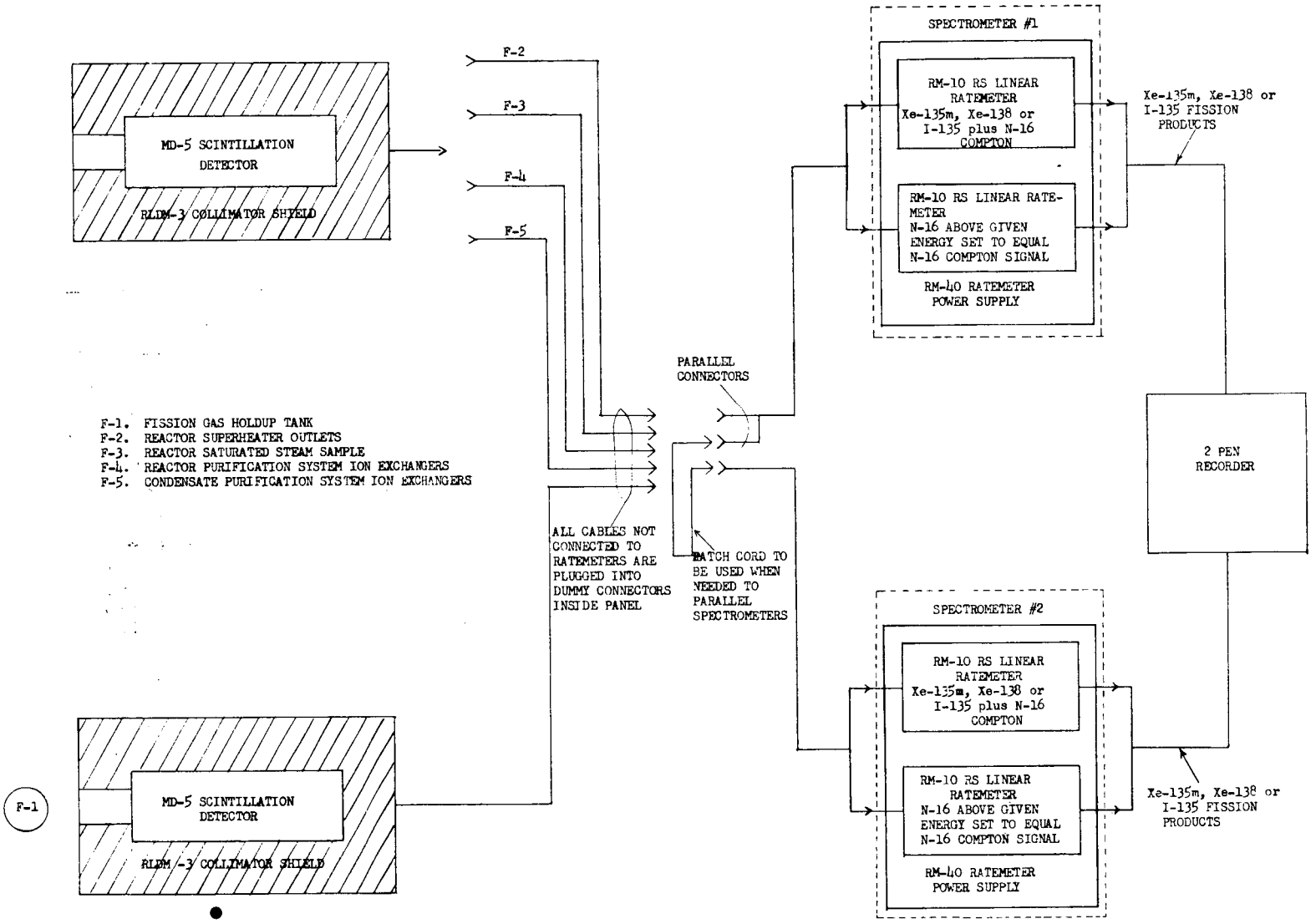

Fig. 802-11 Fuel-element failure detection system.

803. NON-NUCLEAR INSTRUMENTATION

A. Turbine-Generator System

Instrumentation for the 16.5-Mw turbine-generator is the same as required for a conventional steam plant. Controllers, flow indicators, pressure indicators, temperature indicators, recorders, voltmeters, ammeters, wattmeters and associated instruments and switches are located on the local turbine panel, hydrogen control cabinet, exciter panels and control room panels. Temperature measurements are made with resistance thermometer bulbs and iron-constantan thermocouples. Remote control devices are electric and pneumatic operated. A detailed breakdown of the instruments mounted on each panel section is shown on Figs. 803A-1, 803A-2, 803A-3, and 803B-2 through 803B-15.

1. Local Turbine Panel

The local turbine panel is a dead front, self-supporting type with end sections and roof, forming a complete steel enclosure. The location of the panel is shown on Fig. 906-1. The instruments mounted on this panel are to keep the operators informed on the operating condition of the turbine through temperature and pressure measurements. A detailed listing of equipment mounted on this panel is shown on Fig. 803A-1.

2. Hydrogen Control Cabinet

The hydrogen control cabinet provides a control point wherein various instruments and electrical alarm circuits necessary for operational control are located. The cabinet is a rubber mounted, steel cubicle divided into two separate compartments. Compartment No. 1 contains pressure and purity measuring instruments required for control of coolant gas such as:

1) A CO_2 analyzer to provide a convenient means of determining gas conditions during purging operation.
2) Two control manifolds: one to provide automatic control of the hydrogen gas and the second to provide means of controlling admission of CO_2 during purging operations.
3) A water detector to indicate leaks in cooler water circuits.
4) A seal oil control unit to automatically control the supply of pressure oil to the shaft seals under all conditions of operation.
5) Provision is made for discharging hydrogen from the generator to atmosphere if the oil pressure at the shaft seals should decrease to a value below which a seal could not be maintained.

Compartment No. 2 contains an electrical system to provide audible and visual warning of abnormal operating conditions. Equipment mounting locations are shown on Fig. 803A-2. Cabinet location is shown on Fig. 906-1.

3. Exciter Panels

The excitation panels consist of two cubicles, excitation switchgear assembly and the rheostat excitation cubicle, mounted adjacent to each other, located in the turbine area as shown on Fig. 906-1. The excitation panel houses the controls and breakers for the turbine-generator field control. The panels and assigned equipment are shown on Fig. 803A-3.

4. Main Control Panel

Turbine-generator supervisory instruments and controls are located on the main control panel sections J, K. L, M, and N. A detailed listing of all equipment mounted on these panels is shown on Figs. 803B-11, 803B-12, 803B-13, 803B-14 and 803B-15.

5. Level Instrumentation

Pneumatic differential pressure transmitters are used as the primary instruments for measuring the water level in the condenser divided hotwell.

Item No.	Level Instrument
804	Recorder (0-24') Small Case, 2 Pen Condenser Hotwell No. 1 and No. 2.

6. Pressure Instrumentation

Electronic and pneumatic pressure transmitters are used to transmit pressure signals to recorders and indicators in the control room and local panels.

Item No.	Pressure Instruments
805	Recorder PR-3(0-30 in. Hg) 12-in.-dia. Circular, 2 Point, 24 Hour Chart, Record and Indicate Condenser Vacuum.
808	Indicator Multipoint (Pl-3) Turbine Steam Chest, (Pl-4) Turbine First Stage, (Pl-9) Turbine Throttle, (Pl-) Turbine Exhaust.
508	Indicator (Pl-6) Condensate Pump Discharge Header Pressure (0-300 psig)
PR-3T	Transmitter Condenser Vacuum
Pl-3T	Transmitter Turbine Steam Chest
Pl-4T	Transmitter Turbine First Stage
Pl-6T	Transmitter Condensate Pump Discharge Header
Pl-9T	Transmitter Turbine Inlet Steam

7. Temperature Instrumentation

Iron-constantan thermocouples and mercury bulbs located in temperature wells are used for temperature primary elements.

Item No.	Temperature Instruments
803	Recorder 24 Point, 12-in. Strip Chart Recorder and Indicator.

8. Turbine Supervisory Instrumentation

Turbine supervisory instrumentation is located on the local turbine panel and on the main control panel. Turning gear, loading and synchronizing controls are located in the control room.

Item No.	Turbine Instruments
806	Recorder Multi-point, 12-in., Strip Chart, Speed, Valve Position and Eccentricity.
807	Recorder Multi-point, 12-in., Strip Chart, Vibration, Shell and Differential Expansion.

9. Generator Instrumentation

Generator instruments are located on the main control panel and hydrogen control cabinet. Synchroscope, ammeters, varmeters, voltmeters and wattmeters are located on the main control panel. A mimic diagram on panel section L, Fig. 803B-12, indicates station transformer and associated switchgear.

B. Reactor Steam Plant Instrumentation

In general the reactor steam plant instrumentation uses electrical transducers to transmit primary element data to indicators, recorders, and/or controllers. The major steam plant instrumentation systems are given in the sections which follow.

1. The Main Control Panel

The main control panel consists of 14 panel sections on which are mounted all of the necessary instruments which furnish plant data to the control room operating staff. Fig. 803B-1 shows the over-all layout of the main control panel. A detailed breakdown of the instruments mounted on each panel section is included in each panel layout, as shown in Figs. 803B-2 through 803B-15.

2. The Pillbox Control Panel

The pillbox control panel contains those instruments and controls which are deemed necessary for monitoring the reactor plant after

a reactor shutdown and after evacuation of the containment building has occurred.

Figure 803B-16 shows the layout of the pillbox control panel and lists the control panel items.

3. Auxiliary Panels

Auxiliary panels with indicators, control switches, transmitters, controllers, etc. are located about the plant to provide operating personnel with centralized local controls.

The layout of the auxiliary panels and their equipment listings are shown in the following figures: Fig. 803B-17, Superheater Auxiliary Instrument Panel; Fig. 803B-18, Reactor Feedwater Auxiliary Instrument Panel; Fig. 803B-19; Reactor Auxiliary Instrument Panel; Fig. 803B-20, Reactor Auxiliary Systems Instrument Panel. The locations of the Reactor Feedwater Auxiliary Instrument Panel and the Reactor Auxiliary Systems Instrument Panel on the basement floor level are shown in Fig. 906-5. The Superheater Auxiliary Instrument Panel and Reactor Auxiliary Instrument Panel are located on the Main Floor Level shown in Fig. 906-1.

4. Temperature Instrumentation

Temperatures for the nuclear part of the plant will normally be measured with iron-constantan thermocouples which are mounted in thermocouple wells. Reference junctions will be located within the reactor building. The following is a listing of the temperature instruments and the various points being measured in the plant and indicated and/or recorded at the main control panel:

Mark No.	Temperature Instrument
TR-1	Recorder (200-1200°F) I.C. Thermocouple, 8 points Reactor Superheated Steam
TR-2	Recorder (500-1100°F) I.C. Thermocouple, Small Case Superheated Steam Outlet 10A
TR-3	Recorder (500-1100°F) I.C. Thermocouple, Small Case Superheated Steam Outlet 10B
TR-4	Recorder (500-1100°F) I.C. Thermocouple, Small Case Superheated Steam Outlet 10C
TR-5	Recorder (500-1100°F) I.C. Thermocouple, Small Case Superheated Steam Outlet 10D
TR-6	Recorder (500-1100°F) I.C. Thermocouple, Small Case Reactor Superheated Steam (Attemperator)
TR-7	Recorder (0-700°F)(500-1200°F) I.C. Thermocouples, 72 points Condensate, Feedwater, Steam and Miscellaneous

TR-8	Recorder (100-600°F) I.C. Thermocouple, Small Case Reactor Circulating Water Loop No. 1
TR-9	Recorder (100-600°F) I.C. Thermocouple, Small Case Reactor Circulating Water Loop No. 2
TRC-1	Recorder-Controller (500-1100°F) I.C. Thermocouple, Small Case, Main Steam (Attemperator)
TI-1 through TI-8	Indicator (800-1000°F) Main Control Panel, I.C. Thermocouple, Superheater Outlet 10 through 17

5. Pressure Instrumentation

The pressure instruments are the force-balance-type transducers of the bourdon tube or bellows type; adjustable micro-switches and mercury switches for remote trip and annunciation are provided.

The following is a listing of the pressure instruments and the various points being measured in the plant and indicated and/or recorded on the main control panel:

Mark No.	Pressure Instrument
PR-1	Recorder (0-600 & 500-1100 psig), Reactor Pressure
PR-4	Recorder (0-250 psig), Small Case, Reactor Feedwater Pump Suction Header Pressure
D/PR-1	Recorder (0-250 psig), Small Case, Reactor Superheater Differential Pressure
PI-1	Indicator (0-1200 psig), Reactor Pressure
PI-2	Indicator (0-1100 psig), Reactor Superheated Steam Outlet Pressure
PI-7	Indicator (0-2000 psig), Feedwater Pump Discharge Header Pressure
PI-8	Indicator (0-200 psig), Control Air Header Pressure
PI-10	Indicator (7-1/2 - 0 - 7-1/2 psig), Reactor Building Pressure

Local pressure indicators and alarms are provided to indicate pressures, as follows: shield water, boron solution, feedwater, lubricating oil pressures, etc.

6. Level Instrumentation

The level instruments use differential pressure transducers and in some cases float measuring devices for providing electrical signal level data.

The following is a listing of level instruments and the various points being measured in the plant and indicated and/or recorded on the main control panel:

Mark No.	Level Instrument
LR-1	Recorder (-24 in.-0- +24 in.), Reactor Water Level
LR-4	Recorder (0-100%), Fire Protection Water Storage Tanks 1 and 2
LR-5	Recorder (0-100%), Fire Protection Water Storage Tanks 3 and 4
LI-1 through LI-4	Indicator (-2 ft-0- +5 ft), Feedwater Heater No. 4
LI-7	Indicator (0 to 20 ft), Reactor Water

High and low level alarms are provided for various systems, as follows: the demineralized water tank, boron solution tank, retention tank, etc.

7. Flow Instrumentation

Water and steam flow data are obtained by measuring the differential pressure across a flow nozzle, gentile tube or orifice using a differential pressure transducer. Pressure switches and recorder microswitches are used for interlocking and alarming purposes.

The following is a listing of the flow instruments and the various points being measured in the plant and indicated and/or recorded on the main control panel:

Mark No.	Flow Instrument
FR-1	Recorder (0 to 30 M lb/hr), 8 point, Superheater Outlet Steam
FR-2	Recorder (0 to 8 M lb/hr), Small Case, Superheater Outlet 10A Steam

FR-3	Recorder (0 to 8 M lb/hr), Small Case, Superheater Outlet 10B Steam
FR-4	Recorder (0 to 8 M lb/hr), Small Case, Superheater Outlet 10C Steam
FR-5	Recorder (0 to 8 M lb/hr), Small Case, Superheater Outlet 10D Steam
FR-6 FR-12	Recorder (0 to 250 M lb/hr), 2 point, Main Steam-Feedwater
FR-8	Recorder (1000 to 2500 M lb/hr), Small Case, Reactor Water-Circulation Loop No. 1
FR-9	Recorder (1000 to 2500 M lb/hr), Small Case, Reactor Water-Circulation Loop No. 2
FR-10 FR-11	Recorder (0 to 100 M lb/hr), 2 point, Small Case,
FR-15	Recording (0 to 250 M lb/hr), Small Case, Turbine Bypass Steam
FT-6	Totalizer - (6 digits), Main Steam Flow
FT-7	Totalizer - (6 digits), Turbine Bypass Steam Flow

Miscellaneous flows throughout the plant are indicated such as: shield cooling water, integrated make-up water, emergency core spray, etc.

8. Conductivity Instruments

An eight-point recorder is used to record conductivity from the points listed below. The temperature compensated conductivity cells measure condensate and feedwater conductivity in the range of 0 to 5 micromhos, and indicate the condition of the condensate and feedwater exchange filters.

Mark No.	Conductivity Cell Location
CR-1-1E	Condensate from Hotwell East Section
CR-1-2E	Condensate from Hotwell West Section
CR-1-3E	Effluent from Condensate Purification System
CR-1-4E	Influent to Reactor Purification System
CR-1-5E	Effluent from Reactor Purification System

In addition to the above locations, conductivity measurements are made in the water treatment system, demineralizer make-up water system, and condenser cooling water system. Samples of fuel pool storage water will be analyzed in the laboratory.

9. Position Indication

The major valves and other actuator element positions are measured by potentiometers fastened to the control element to be positioned. A 1000 Ω/volt meter mounted on the main control panel is used to indicate the valve position. In addition to the meter indicators, red, amber and green indicating lights are used to indicate valve full open, intermediate and valve full closed positions; where solenoid valves are used only red and green indicating lights are used to indicate open and closed positions. Red and green indicating lights are used to indicate motor operation, red indicating motor on, green indicating motor off. The valves that require control room position indication are listed as follows:

Mark No.	Position Instrument
ZI-1	Turbine Admission Valve
ZI-2	Turbine Bypass Valve
ZI-3	Minimum Flow Bypass Valve
ZI-4	Feedwater Control Valve
ZI-8	Condensate Makeup Valve
ZI-9	Reactor Circulating Water Pump No. 1 Outlet Valve
ZI-10	Reactor Circulating Water Pump No. 2 Outlet Valve

10. Annunciators

The general station annunciator system and the reactor scram annunciator systems are located on the main control panel as shown on Figs. 803B-5, 803B-6, 803B-7, 803B-8, 803B-9, 803B-10, 803B-11, 803B-12, 803B-14 and 803B-15.

Isolated systems annunciator panels, such as: generator hydrogen control, make-up water purification, condensate purification are located on local panels.

The general annunciator system consists of 192 units arranged as shown on the above mentioned figures. The system uses solid state devices that monitor a contact closure type of signal as shown on Figs. 803B-21, 803B-22, and 803B-23. It is of modular construction with individual plug-in cards. Each 2-in. by 3-in. viewing window is equipped with one red and one white lamp to provide sequential visual indication. The first alarm in a sequence will cause the red lamp to flash and sound the audible alarm. All subsequent alarms in that group will flash white lights with the sounding of the audible alarm. When the acknowledge pushbutton is depressed, the audible alarm will be silenced and all flashing lamps will burn steady. When the secondary alarms return to normal, the white lamps will go out. However, the return of the first alarm to normal will not extinguish the red lamp. The manual reset pushbutton will extinguish this lamp after it has returned to normal. A second sequential alarm feature is provided to clear the system for future first alarms even though the original group of alarm conditions still exist. For example: assume a series of alarm conditions have been acknowledged. The indication will be one steady red lamp and several steady white lamps. By pressing the reset button the red lamp is turned off, and its white lamp is turned on. If a new series of alarms occur, they will be indicated by a flashing red lamp for the first, and flashing white lamps for the subsequent ones. The original white lamps will automatically reset as the alarms return to normal. The system locks in on all momentary alarms regardless of its time of occurrence. However, when the acknowledge push button is pressed all momentary white lamp alarms will clear up.

The reactor scram annunciator system uses solid state, modular construction with plug in units. The system consists of 35 units arranged as shown on Fig. 803B-9 and initiated by contact closure or an electronic voltage step signal as shown on Fig. 803B-23. Each 13/16 in. high by 1-1/16 in. wide window is equipped with two red and two white lamps and a switch to enable acknowledgement of alarms by pressing the window. When an alarm occurs the associated window will glow red and the audible alarm will sound. Pressing the window will silence the audible alarm and change the red light to a white light. When the alarm returns to normal the white light automatically goes out.

The local hydrogen control cabinet houses a ten-window annunciator system, as shown on Fig. 803A-2, to alarm malfunctions of the generator hydrogen cooling system.

The annunciator system for the make-up water purification system consists of nine red alarm lights with acknowledge, reset, and test pushbuttons as shown on Fig. 510-2.

The annunciator system for the condensate purification system consists of four red alarm lights with acknowledge, reset, and test pushbuttons as shown on Fig. 505-3.

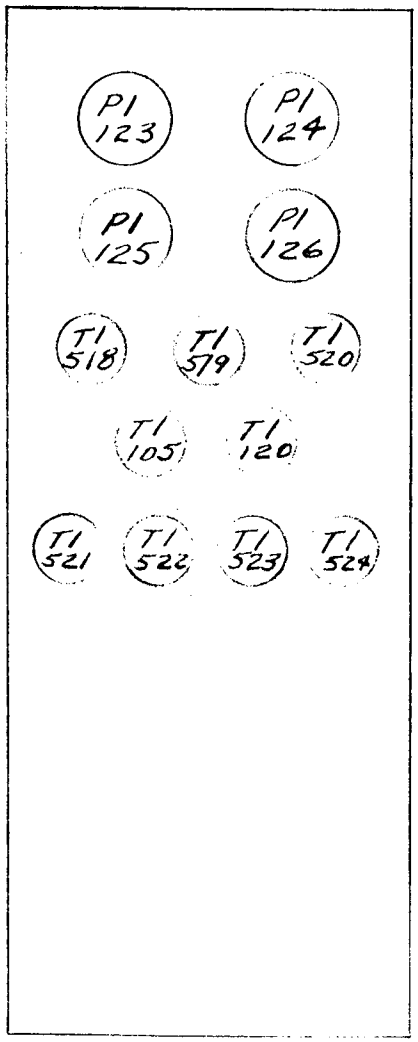

Mark No.	Description
Pl-123	High Pressure Inlet
Pl-124	Steam Chest
Pl-125	First Stage
Pl-126	Exhaust
Tl-518	Turbine Thrust Bearing
Tl-519	High Pressure Turbine Bearing
Tl-520	Low Pressure Turbine Bearing
Tl-105	Turbine Inlet
Tl-120	Turbine Exhaust
Tl-521	Generator Bearing No. 1
Tl-522	Generator Bearing No. 2
Tl-523	Exciter Bearing No. 1
Tl-524	Exciter Bearing No. 2

Fig. 803A-1 Local turbine gauge board.

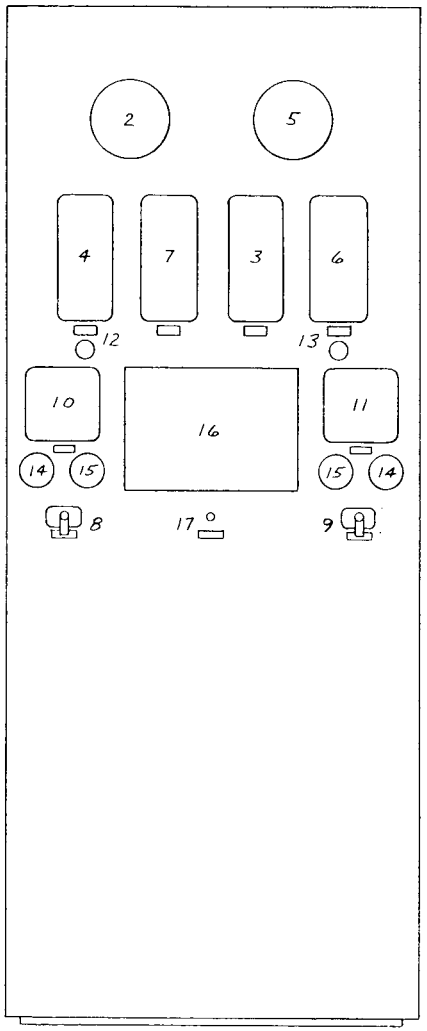

REFERENCE DWG.- G.E. 334D374 - REV. 5

KEY

1. Horn
2. High Machine Gas Pressure
3. Flow Meter 0-900 cc/min.
4. Flow meter 0-2000 cc/min. Scavenged Gas Collector End
5. Low Machine Gas Pressure
6. Flow Meter 0-2000 cc/min. Scavenged Gas Turbine End
7. Differential Fan Pressure
8. Scavenged Gas Selector Valve
9. Scavenged Gas Selector Valve
10. H_2 Purity Generator Casing 50-100% in Air
11. H_2 Purity Scavenged Gas 50-100% in Air
12. Scavenged Gas Collector End Control Valve
13. Scavenged Gas Turbine End Control Valve
14. Milliameter
15. Potentiometer and Switch
16. Annunciator - 10 Drop
17. Alarm Cut-Out Switch

Fig. 803A-2 Generator-Hydrogen control panel.

KEY

1. Pilot Excitor Rheostat
2. Exciter Voltmeter
3. Main Exciter Rheostat

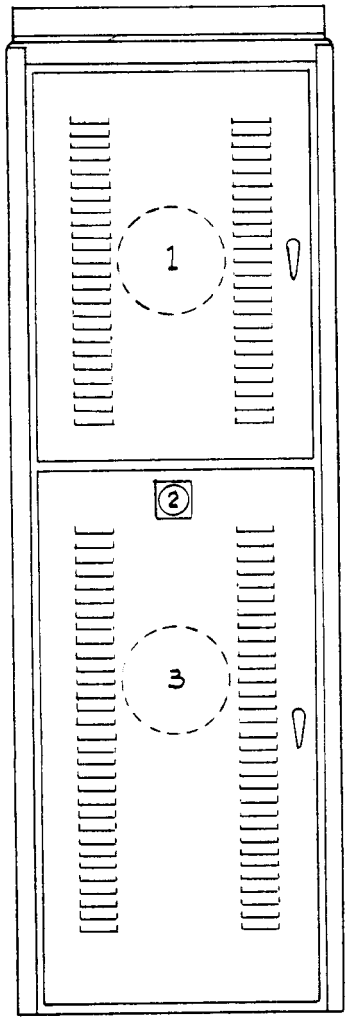

Excitation Rheostat Cubicle

KEY

1. 50-amp Circuit Breaker
2. Exciter Indicating Lights
3. Exciter By-Pass Switch
4. Permissive Switch
5. 125-V DC Field Breaker (Drawout Type)

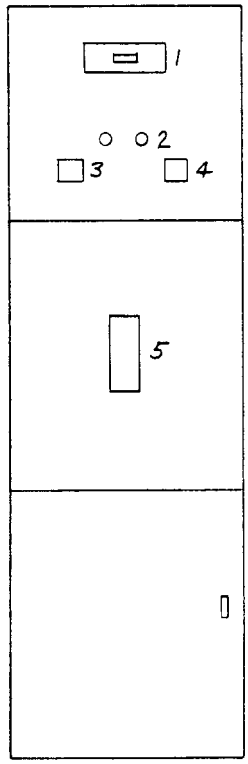

Excitation Switchgear Cubicle

Fig. 803A-3 Generator excitation control panels.

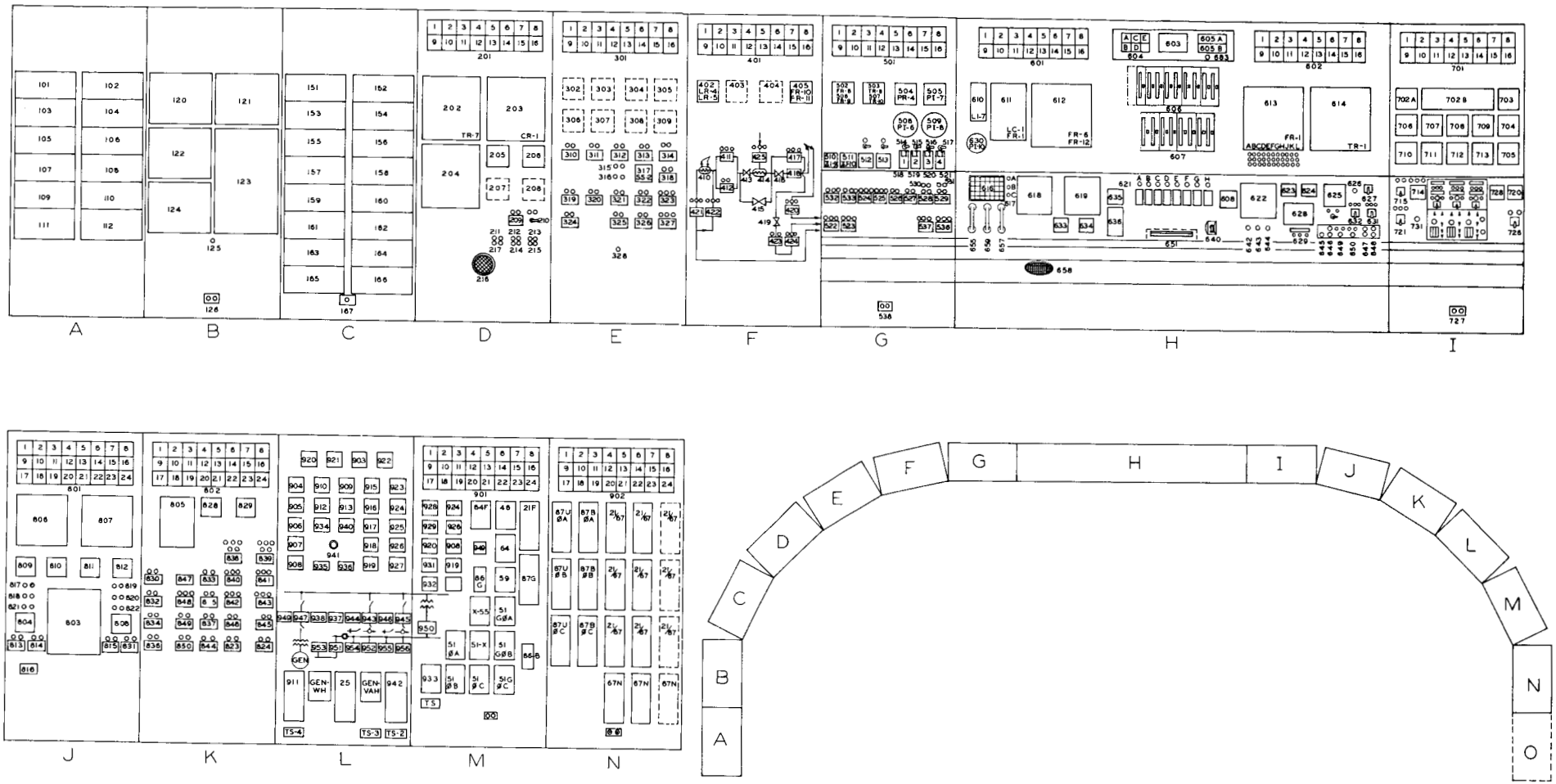

Fig. 803B-1 Over-all layout of the main control panel.

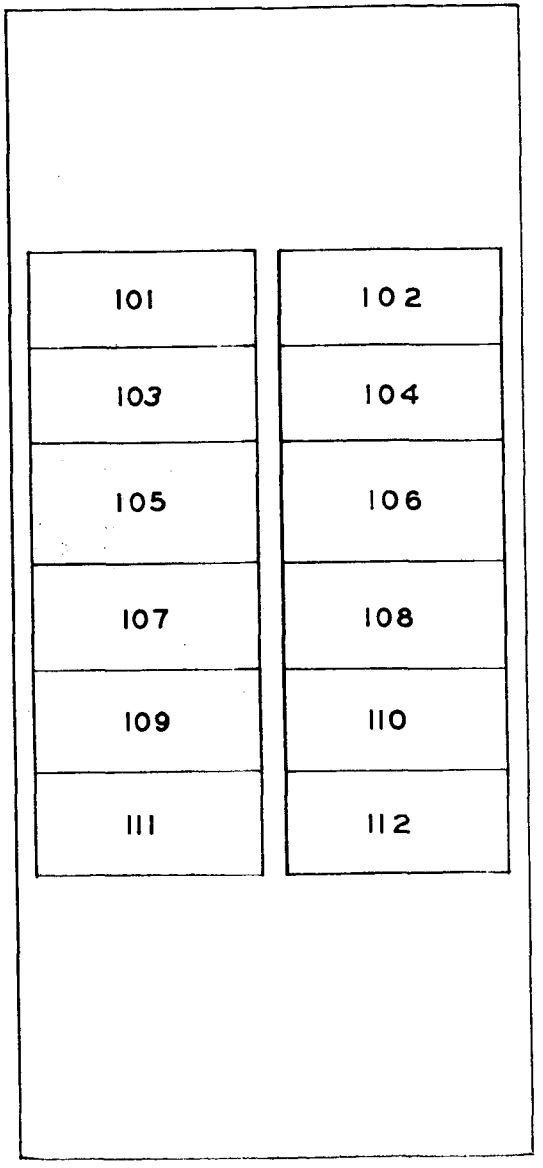

Detail No.	Description
101	Area Radiation Indicators (.01 mr/hr-100 mr/hr) RC-1 Vapor Sphere Room RC-2 Decontamination Room RC-3 Condensate Pump Area RC-4 Freight Door Area RC-5 Reactor Purification System Area
102	Area Radiation Indicators (.01 mr/hr - 100 mr/hr) RC-6 Load Center Room RC-7 South Stairway RC-8 Retention Tank Room RC-9 Feedwater Pump Area RC-10 Exhaust Stack
103	Area Radiation Indicators (.01 mr/hr-100 mr/hr) RC-11 North Stairway RC-12 Electrical Maintenance Shop RC-13 Building Office Area RC-15 Main Air Lock Area RC-16 Laboratory
104	Area Radiation Indicator (.01 mr/hr-100 mr/hr) RC-18 Turbine Control Panel Area RC-19 Fuel Storage Room RC-20 Top of the Biological Shield RC-21 Top of the Biological Shield RC-22 Biological Shield Service Platform
105	Area Monitoring Control and Power Unit
106	Area Monitoring Control and Power Unit
107	Area Monitor Indicator (.01 mr/hr-10 R/hr) RB-1 Air Ejector Room RB-2 Main Condenser Room RB-3 Condenser Hogging Pump Room RB-4 Condensate Resin Regeneration Room RB-5 Preheater Room
108	Area Monitor Indicator (.01 mr/hr-10 R/hr) RB-6 Reactor Circulating Water Pump Room RB-7 Feedwater Heater Room RB-9 Main Steam Line RB-10 Emergency Condenser RB-11 Liquid Waste Pump Room
109	Area Monitoring Control and Panel Unit

Fig. 803B-2 Main control panel, section A.

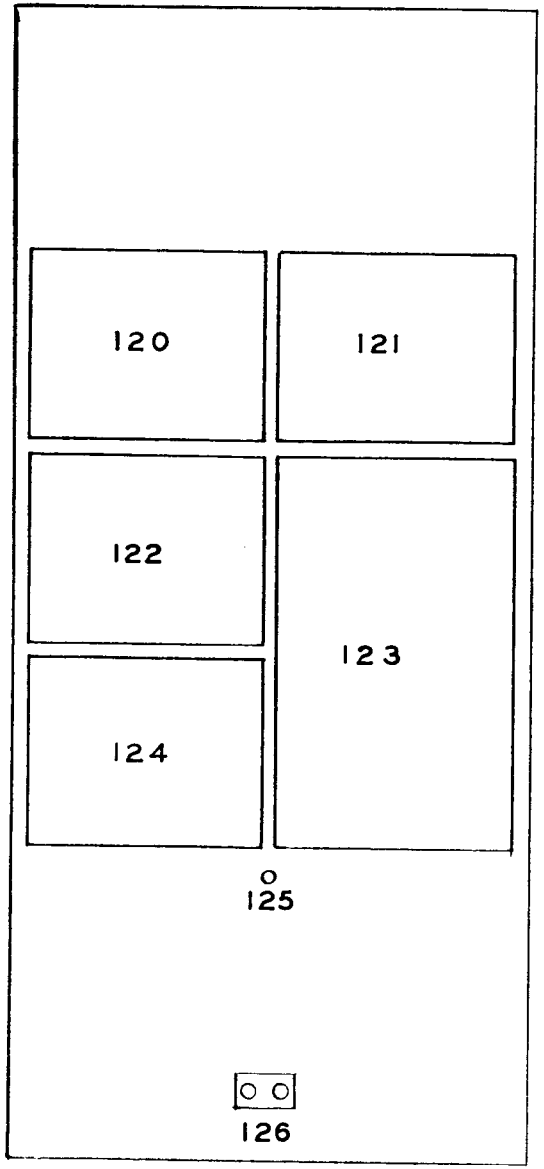

Detail No.	Description
120	20 pt. Area Monitor Recorder
121	Fuel Element Failure Detection System Recorder
122	10 pt. Area Monitor Recorder
123	Fuel Element Failure Detection System
124	Air Particulate Monitor Recorder
125	Plant Maintenance System Telephone Jack
126	115 volt a-c Power Receptacle

Fig. 803B-3 Main control panel, section B.

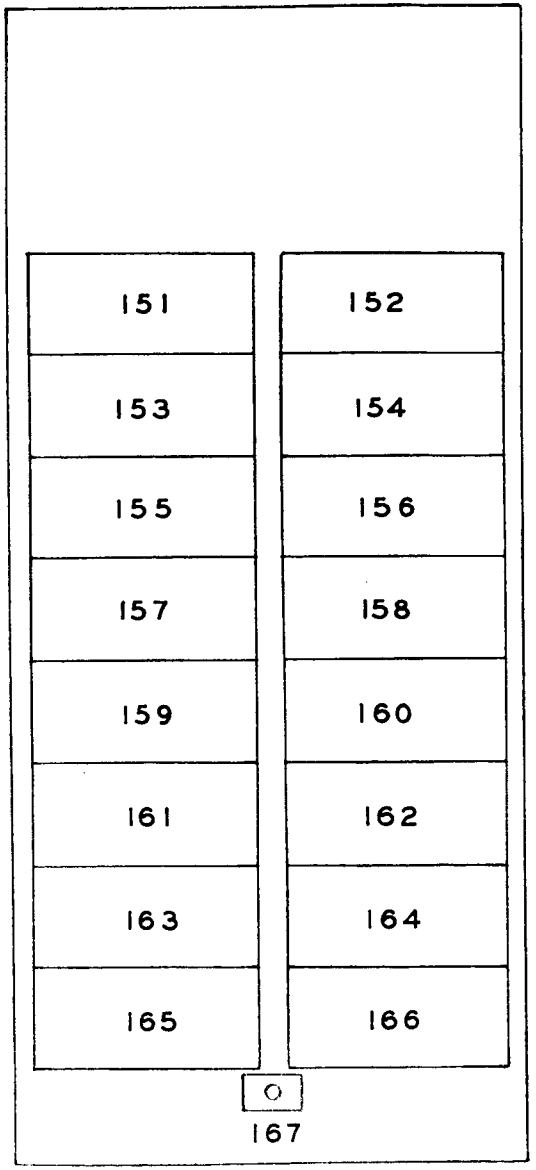

Detail No.	Description
151	Log Count Rate and Period, Source Range, Channel 1
152	Log Count Rate and Period, Source Range, Channel 2
153	Log N and Period, Intermediate Range, Channel 3
154	Log N and Period, Intermediate Range, Channel 4
155	Micromicroammeter Channel 5
156	Micromicroammeter Channel 6
157	Power Range Safety Amplifier Channel 7
158	Power Range Safety Amplifier Channel 8
159	Scram and Logic Circuitry, Safety System
160	Scram and Logic Circuitry, Safety System
167	125 volt d-c Power Receptacle

Fig. 803B-4 Main control panel, section C.

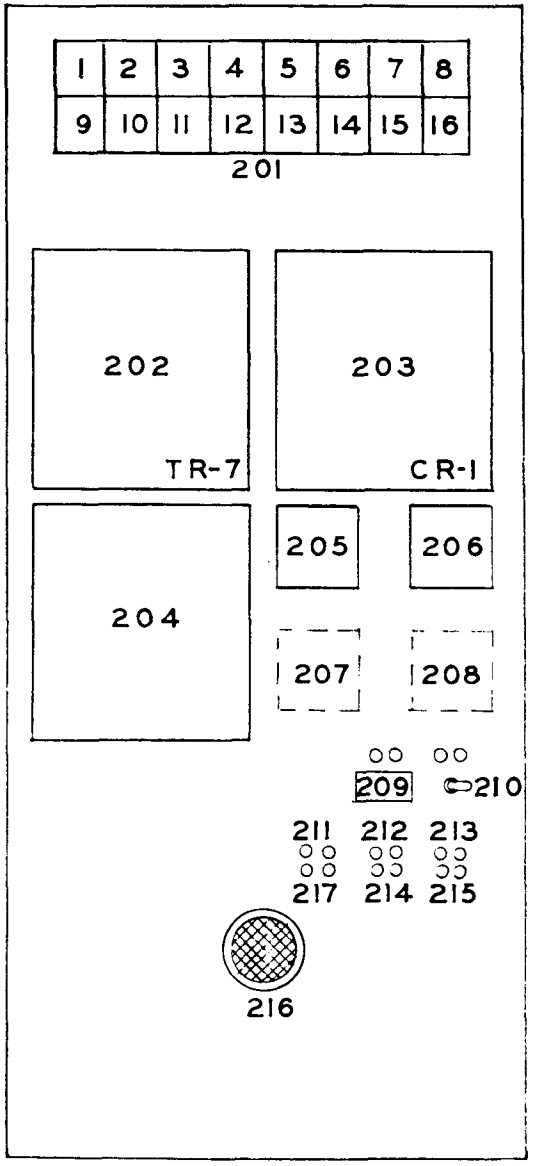

Detail No.	Description
201	Annunciator: Window No. 1 Fuel Pool Purification System Flow-Low Window No. 2 Shield Cool System Flow-Low Window No. 3 Air Ejector Hydrogen Concentration-High Window No. 4 Control Rod Seal Water D/P High Window No. 5 High Conductivity Window No. 6 Retention Tanks Level-High Window No. 7 Spare Window No. 8 Spare Window No. 9 Fuel Pool Purification System Temperature-High Window No. 10 Shield Cool System Surge Tank Level High-Low Window No. 11 Reactor Annulus Exhausters No. 1 and 2 - Not in service Window No. 12 Control Rod Seal Water Flow-Low Window No. 13 Multi-Bank Temperature Recorder Window No. 14 Spare Window No. 15 Spare Window No. 16 Spare
202	72 pt. Temperature Recorder
204	72 pt. Multi-Bank Switching Unit
203	8 pt. Conductivity Recorder
205	Micromicroammeter Recorder
206	Reactor Period Recorder
209	Seal Water Pump (Control Switch with red and green indicating lights)
210	Reactor Circulating Water System Seal Water Backup Valve (Toggle Switch with red and green indicating lights)
211	Reactor Annulus Exhauster No. 1 (Red and green indicating lights)
212	Fuel Pool Purification Pump No. 1 (Red and green indicating lights)
213	Shield Cooling Pump No. 1 (Red and green indicating lights)
214	Fuel Pool Purification Pump No. 2 (Red and green indicating lights)
215	Shield Cooling Pump No. 2 (Red and green indicating lights)
216	Nuclear Instrumentation Source Range Speaker
217	Reactor Annulus Exhauster No. 2

Fig. 803B-5 Main control panel, section D.

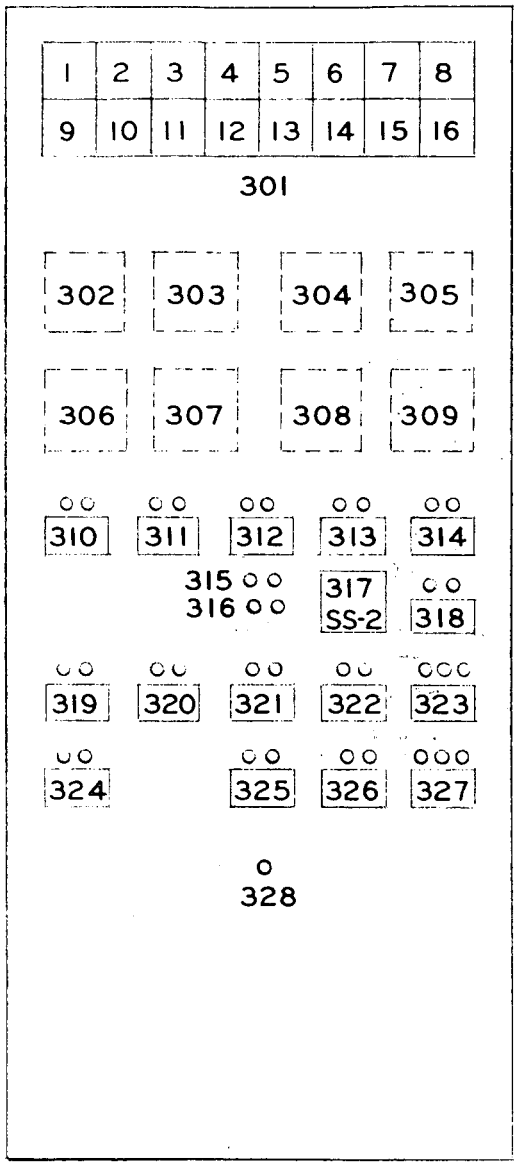

Detail No.	Description
301	Annunciator: Window No. 1 Emergency Condenser - Actuated Window No. 2 Emergency Condenser Drain Valves on Manual Control Window No. 3 Spare Window No. 4 Spare Window No. 5 Building Ventilation Flow-Low Window No. 6 Reactor Building Vacuum Breaker No. 1 - Open Window No. 7 Reactor Building Doors - Open Window No. 8 Spare Window No. 9 Emergency Condenser - Bypassed Window No. 10 Emergency Condenser Level-Low Window No. 11 Spare Window No. 12 Spare Window No. 13 Spare Window No. 14 Reactor Building Vacuum Breaker No. 2 - Open Window No. 15 Spare Window No. 16 Spare
310	Emergency Condenser Steam Injection Trip Valve No. 1 (Control Switch with red and green indicating lights)
311	Emergency Condenser Steam Injection Trip Valve No. 2 (Control Switch with red and green indicating lights)
312	Emergency Condenser Exhaust Valve No. 1 (Control Switch with red and green indicating lights)
313	Emergency Condenser Exhaust Valve No. 2 (Control Switch with red and green indicating lights)
314	Spare
315	Emergency Condenser Drain Valve No. 1 (Red and green indicating lights)
316	Emergency Condenser Drain Valve No. 2 (Red and green indicating lights)
317	Emergency Condenser Drain Valves Selector Station
318	Spare
319	Reactor Building Isolation Inlet Valve No. 1 (Control Switch with red and green indicating lights)
320	Reactor Building Isolation Inlet Valve No. 2 (Control Switch with red and green indicating lights)
321	Reactor Building Isolation Exhaust Valve No. 1 (Control Switch with red and green indicating lights)
322	Reactor Building Isolation Exhaust Valve No. 2 (Control Switch with red and green indicating lights)
323	Vapor Sphere Admission Valve (Control Switch with red, amber and green indicating lights)
324	Reactor Building Inlet Fan (Control Switch with red and green indicating lights)
325	Reactor Building Exhaust Fan (Control Switch with red and green indicating lights)
326	Gland Seal Divers on Valve (Control Switch with red and green indicating lights)
327	Stack Isolation Valve (Control Switch with red and green indicating lights)
328	Plant Maintenance System Telephone Jack

Fig. 803B-6 Main control panel, section E.

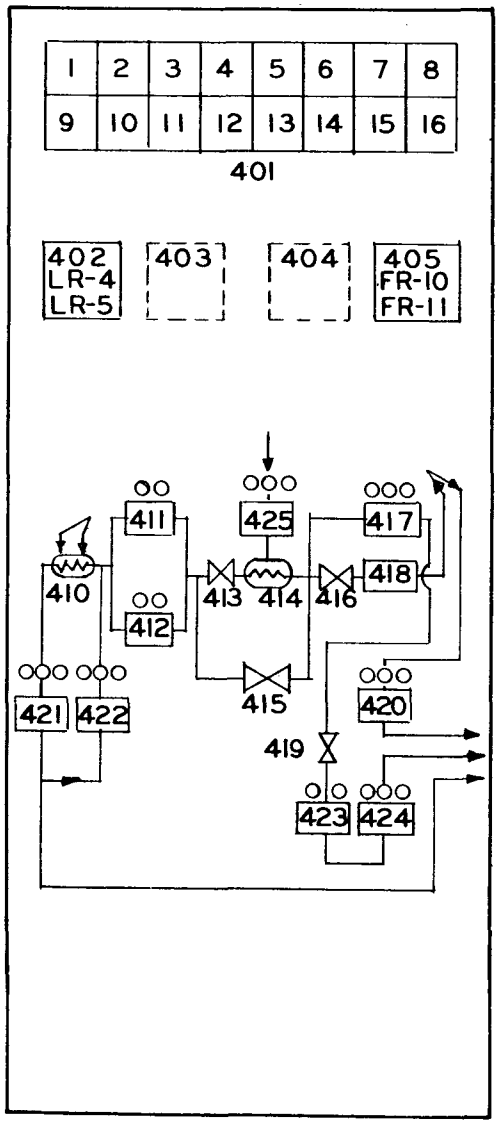

Detail No.	Description
401	Annunciator: Window No. 1 Reactor Purification System Flow - Low Window No. 2 Preheater - ON Window No. 3 Demineralizer Malfunction Window No. 4 Spare Window No. 5 Building External Spary Valve - NFC Window No. 6 Fire Sprinkler System - ON Window No. 7 Reactor Cover Gasket Pressure - High Window No. 8 Spare Window No. 9 Reactor Purification System Temperature - High Window No. 10 Spare Window No. 11 Demineralized Water Storage Tank Level - Low Window No. 12 Spare Window No. 13 Fire Protection System Post Indicator Valves - NFO Window No. 14 Fire Protection Storage Tanks - Level Low Window No. 15 Spare Window No. 16 Spare
402	Fire Protection Storage Tanks No. 1 and 2 Level Recorder; Fire Protection Storage Tanks No. 3 and 4 Level Recorder
403	Spare
404	Spare
405	Preheater and Shutdown Cooling Flow — Reactor Purification Loop Flow Recorder
410	Reactor Purification Regenerative Cooler Escutcheon Plate
411	Reactor Purification Pump No. 1 (Control Switch with red and green indicating lights)
412	Reactor Purification Pump No. 2 (Control Switch with red and green indicating lights)
417	Shutdown Cooling Loop Valve (Control Switch with red, amber and green indicating lights)
420	Reactor Purification Return Valve (Control Switch with red, amber and green indicating lights)
421	Reactor Purification Regenerative Cooler Inlet Valve (Control Switch with red, amber and green indicating lights)
422	Reactor Purification Cooler Bypass Valve (Control Switch with red, amber and green indicating lights)
423	Preheater (Control Switch with red and green indicating lights)
424	Preheater Outlet Valve (Control Switch with red, amber and green indicating lights)

Fig. 803B-7 Main control panel, section F.

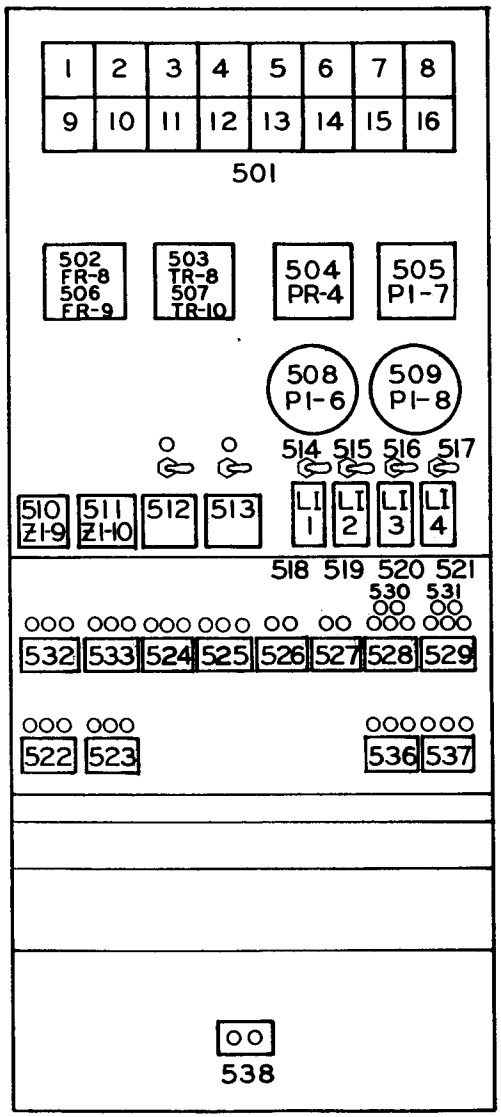

Detail No.	Description
501	Annunciator:
	Window No. 1 Feedwater Pump No. 1 Breaker - Open
	Window No. 2 Feedwater Pumps Inlet Pressure - Low
	Window No. 3 Feedwater Heaters Drain Level - High
	Window No. 4 Condensate Pump No. 1 - Not in service
	Window No. 5 Condensate Pump Discharge Pressure - Low
	Window No. 6 Reactor Circulating Water Loop No. 1 - Temperature Low
	Window No. 7 Reactor Circulating Water Loop No. 1 - Flow Low
	Window No. 8 Reactor Circulating Water Pump No. 1 - Not in service
	Window No. 9 Feedwater Pump No. 2 Breaker - Open
	Window No. 10 Feedwater Pump Discharge Pressure - Low
	Window No. 11 Feedwater Stop Valve - NFO
	Window No. 12 Condensate Pump No. 2 - Not in service
	Window No. 13 Spare
	Window No. 14 Reactor Circulating Water Loop No. 2 - Temperature Low
	Window No. 15 Reactor Circulating Water Loop No. 2 - Flow Low
	Window No. 16 Reactor Circulating Water Pump No. 2 - Not in service
502	Reactor Circulating Water Loop No. 1 Flow Recorder
503	Reactor Circulating Water Loop No. 1 Temperature Recorder
504	Feedwater Pump Suction Header Pressure Recorder
505	Feedwater Pump Discharge Header Pressure Indicator
506	Reactor Circulating Water Loop No. 2 Flow Recorder
507	Reactor Circulating Water Loop No. 2 Temperature Recorder
508	Condensate Pump Discharge Header Pressure Indicator
509	Control Air Header Pressure Indicator
510	Reactor Circulating Water Pump No. 1 Outlet Valve Position Indicator
511	Reactor Circulating Water Pump No. 2 Outlet Valve Position Indicator
512	Reactor Circulating Water Pump No. 1 Ammeter
513	Reactor Circulating Water Pump No. 2 Ammeter
514	Feedwater Heater No. 4, Air Pilot Valve
515	Feedwater Heater No. 3, Air Pilot Valve
516	Feedwater Heater No. 2, Air Pilot Valve
517	Feedwater Heater No. 1, Air Pilot Valve
518	Feedwater Heater No. 4, Level Indicator
519	Feedwater Heater No. 3, Level Indicator
520	Feedwater Heater No. 2, Level Indicator
521	Feedwater Heater No. 1, Level Indicator
522	Reactor Circulating Water Pump Number 1 Inlet Valve (Control Switch with red, amber and green indicating lights)
523	Reactor Circulating Water Pump No. 2 Inlet Valve (Control Switch with red, amber and green indicating lights)
524	Reactor Circulating Water Pump No. 1 (Control Switch with red, green and white indicating lights)
525	Reactor Circulating Water Pump No. 2 (Control Switch with red, green and white indicating lights)
526	Condensate Pump No. 1 (Control Switch with red and green indicating lights)
527	Condensate Pump No. 2 (Control Switch with red and green indicating lights)
528	Reactor Feedwater Pump No. 1 (Switch with red, green and white indicating lights)
529	Reactor Feedwater Pump No. 2 (Control Switch with red, green and white indicating lights)
530	Reactor Feedwater Pump No. 1 Recirculation Valve (red and green indicating lights)
531	Reactor Feedwater Pump No. 2 Recirculation Valve (red and green indicating lights)
532	Reactor Circulating Water Pump No. 1 Outlet Valve (Control Switch with red, amber and green indicating lights)
533	Reactor Circulating Water Pump No. 2 Outlet Valve (Control Switch with Red, Amber and green indicating lights)
534	Reactor Circulating Water Pump No. 1 (Ammeter Switches)
535	Reactor Circulating Water Pump No. 2 (Ammeter Switches)
536	Reactor Feedwater Stop Valve (Control Switch with red, amber and green indicating lights)
537	Feedwater Control Valve Bypass Valve (Control Switch with red, amber and green indicating lights)
538	115 volt a-c power receptacle

Reactor Circulating Water Pump No. 1
Reactor Circulating Water Pump No. 2
Seal Water Discharge Valve Switch and indicating light

Fig. 803B-8 Main control panel, section G.

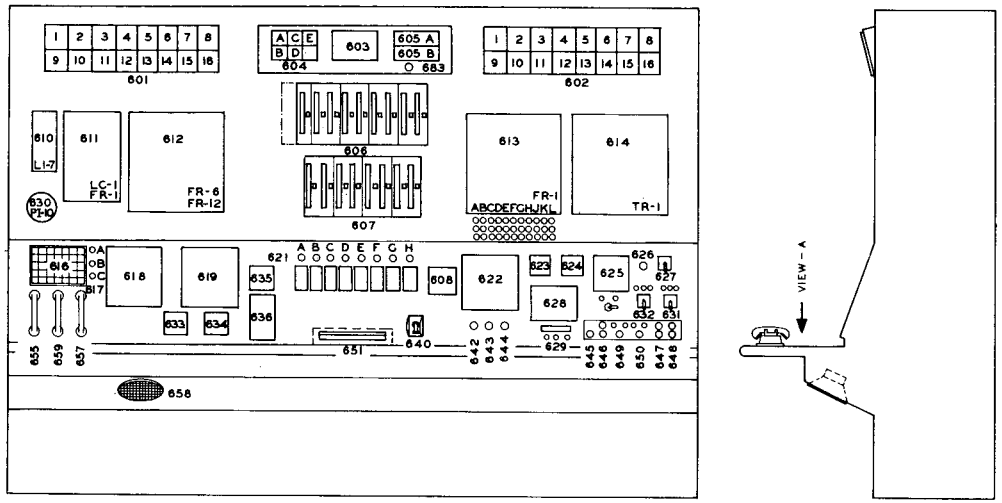

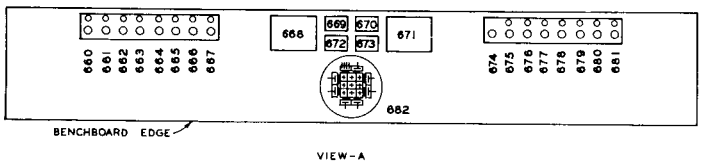

VIEW-A

Detail No.	Description
601	Annunciator:
	Window No. 1 Control Rod Withdrawal Prohibit
	Window No. 2 Channels 3 and 4 Period 20 sec.
	Window No. 3 Channels 5 and 6 Power 102-108%
	Window No. 4 Fission Products Activity High
	Window No. 5 Air Particulate Activity High
	Window No. 5 Air Particulate Activity High
	Window No. 6 Spare
	Window No. 7 Reactor Water Level - High
	Window No. 8 Control Air Pressure - Low
	Window No. 9 Period - Bypass
	Window No. 10 Scram Circuit - Bypass
	Window No. 11 Channels 7 and 8 Power 110%
	Window No. 12 Spare
	Window No. 13 Area Monitor Activity High
	Window No. 14 Spare
	Window No. 15 Reactor Water Level Low
	Window No. 16 Spare
602	Annunciator:
	Window No. 1 Poison Tank Level - High
	Window No. 2 Building Spray Valve - Actuated
	Window No. 3 Core Spray Valve - Actuated
	Window No. 4 Reactor Pressure - High
	Window No. 5 Superheater Differential Pressure - High
	Window No. 6 Main Steam Flow - High
	Window No. 7 Main Steam Temperature - High
	Window No. 8 Spare
	Window No. 9 Poison Tank Level - Low
	Window No. 10 Building Spray Valve Pillbox - Bypass
	Window No. 11 Core Spray Pillbox - Bypass
	Window No. 12 Reactor Pressure - Low
	Window No. 13 Reactor Rate of Pressure - High
	Window No. 14 Spare
	Window No. 15 Main Steam Temperature - Low
	Window No. 16 Spare
603	Station Clock
604A	Entrance Airlock - Inner Door
604B	Entrance Airlock - Outer Door
604C	Service and Emergency Airlock - Inner Door
604D	Service and Emergency Airlock - Outer Door
604E	Freight Door
605A	Reactor Off
605B	Emergency Power ON
606A-J	Boiler Control Rod Position Indicators
607A-H	Superheater Control Rod Position Indicators
608	Control Rod Drop Timer
610	Reactor Water Level Indicator
611	Reactor Water Level Recorder - Controller
612	Main Steam - Feedwater Flow Recorder
613	8 pt. Superheater Outlet Flow Recorder
614	8 pt. Superheater Outlet Temperature Recorder
615A-L	Superheater Outlet Valves (red, amber and green indicating lights)
616	Scram Annunciator:
	Window No. 1 Channel No. 3 Period 15 sec
	Window No. 2 Channel No. 5 Power 110%
	Window No. 3 Channel No. 7 Power 110%
	Window No. 4 Building Exhaust Activity
	Window No. 5 Reactor Pressure (975) psig
	Window No. 6 Reactor Water Level High
	Window No. 7 Superheater Differential Pressure High
	Window No. 8 Channel No. 4 Period 15 sec
	Window No. 9 Channel No. 6 Power 110%
	Window No. 10 Channel No. 8 Power 110%
	Window No. 11 Auxiliary Power Failure
	Window No. 12 Reactor Pressure (775) psig

Detail No.	Description
616	Scram Annunciator:
	Window No. 13 Reactor Water Level Low
	Window No. 14 Reactor Rate of Pressure 2 psig
	Window No. 15 Pillbox Manual Scram
	Window No. 16 Reactor Circulating Water Loop No. 1 Flow Low
	Window No. 17 Reactor Circulating Water Loop No. 1 Temperature Low
	Window No. 18 Main Steam Flow - High
	Window No. 19 Superheater Outlet Headers Temperature - High
	Window No. 20 Main Steam Stop Valve - NFO
	Window No. 21 Spare
	Window No. 22 Seismic Shock
	Window No. 23 Reactor Circulating Water Loop No. 2 Flow - Low
	Window No. 24 Reactor Circulating Water Loop No. 2 Temperature - Low
	Window No. 25 Feedwater Pressure (1000) psig
	Window No. 26 Superheater Rods not Full in and Steam Flow 10%
	Window No. 27 Condenser Vacuum (20) in. Hg
	Window No. 28 Spare
	Window No. 29 Turbine Admission Valve Closed
	Window No. 30 Turbine Trip Valve - NFO
	Window No. 31 TBV or MFBV closed and TAV or TTV closed
	Window No. 32 Reactor Safety Valves - NFC
	Window No. 33 Reactor Relief Valve - NFC
	Window No. 34 Spare
	Window No. 35 Spare
617A-C	Reactor Safety Valves 1, 2 and 3 (Red indicating light)
618	Nuclear Instrumentation Log N Recorder
619	Nuclear Instrumentation Linear N Recorder
620A-H	Superheater Outlet Temperature Indicators
621A-H	Superheater Outlets High Temperature Red Alarm Lights
622	Reactor Pressure Recorder
623	Reactor Pressure Indicator
624	Main Steam Pressure Indicator
625	Superheater Differential Pressure Recorder
626	Reactor Scram Push Button
627	Emergency Condenser (Control Switch)
628	Main Steam Temperature - Superheater Outlet Steam Temperature Recorder
629	Attemperator Spray Control Valve (Red, amber and green indicating lights)
630	Reactor Building Pressure Indicator
631	Emergency Core Spray Valve (Control Switch with red, amber and green indicating lights)
632	Building Spray Valve (Control Switch with red, amber and green indicating lights)
633	Nuclear Instrumentation Period Indicator
634	Nuclear Instrumentation Log Count Rate Indicator
635	Nuclear Instrumentation Micromicrommeter Indicator
636	Nuclear Instrumentation Micromicrommeter Scale Selector Switch
637	Boiler Control Rod Selector Switch
638	Control Rod Selector Transfer Switch
639	Superheater Control Rod Selector Switch
640	Rod Control Switch
642	Annunciator Acknowledgement
643	Annunciator Reset
644	Annunciator Lamp Test
645	Emergency Core Spray Valve Push Button
646	Building Spray Valve Push Button
647	Main Steam Stop Valve Push Button
648	Reactor Building Ventilation System Push Button
649	Poison Tank Pressure Equalizing Valve
650	Poison Injection Control Valve
651	Galvanometer Assembly
655	Plant Maintenance System Telephones
656	Plant Paging System Telephone
657	FP40A Interplant System Telephone
658	Plant Paging System Loudspeaker
659	Plant Operating System
660	Selector Switch and Indicating Lights - Period Scram Bypass
661	Selector Switch and Indicating Lights
662	Selector Switch and Indicating Lights
663	Selector Switch and Indicating Lights
664	Selector Switch and Indicating Lights
665	Selector Switch and Indicating Lights
666	Selector Switch and Indicating Lights
667	Selector Switch and Indicating Lights
668	Galvanometer Level Shunt
669	Galvanometer Deviation Range Selector
670	Galvanometer Deviation Milliammeter
671	Galvanometer Deviation Shunt
672	Galvanometer Deviation Coarse Adjustment
673	Galvanometer Deviation Fine Adjustment
674	Selector Switch - Reactor Startup
675	Selector Switch and Indicating Lights
676	Selector Switch and Indicating Lights
677	Selector Switch and Indicating Lights
678	Selector Switch and Indicating Lights
679	Selector Switch and Indicating Lights
680	Selector Switch and Indicating Lights
681	Selector Switch and Indicating Lights
682	Schematic Diagram, Reactor Control Rod Zone and Superheater Outlets
683	Emergency Diesel Timer Indicating Lights

Fig. 803B-9 Main control panel, section H.

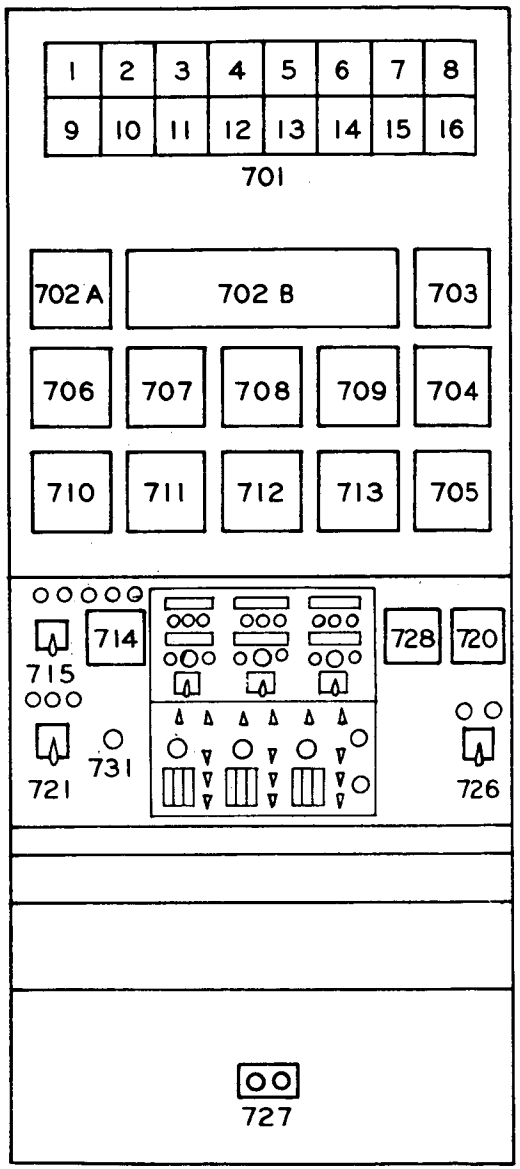

Detail No.	Description
701	Annunciator: Window No. 1 Minimum Flow Bypass Valve NFC Window No. 2 Turbine Bypass Valve NFC Window No. 3 Turbine Bypass Valve Switch - Not in turbine operation Window No. 4 Superheated-Steam Assembly No. 10 Temperature > 920°F Window No. 5 Superheated-Steam Assemblies 11-17 Temperature > 920°F Window No. 6 Spare Window No. 7 Spare Window No. 8 Spare Window No. 9 Spare Window No. 10 Spare Window No. 11 Spare Window No. 12 Superheated-Steam Assembly No. 10 Flow < ( ) lb/hr Window No. 13 Superheated-Steam Assemblies 11-17 Flow < ( ) lb/hr Window No. 14 Spare Window No. 15 Spare Window No. 16 Spare
702 A	Reactor Thermal Power Digital Calculator-Indicator
702 B	Reactor Power Level Digital Indicator
703	Main Steam Flow Totalizer
704	Bypass Steam Flow Totalizer
705	Bypass Steam Flow Recorder
706	Superheater Assembly 10A Outlet Flow Recorder
707	Superheater Assembly 10B Outlet Flow Recorder
708	Superheater Assembly 10C Outlet Flow Recorder
709	Superheater Assembly 10D Outlet Flow Recorder
710	Superheater Assembly 10A Outlet Temperature Recorder
711	Superheater Assembly 10B Outlet Temperature Recorder
712	Superheater Assembly 10C Outlet Temperature Recorder
713	Superheater Assembly 10D Outlet Temperature Recorder
714	Turbine Trip Valve (Red and green indicating lights)
715	Turbine Solenoid Trip Valve Control Switch
716	Minimum Flow Bypass Valve Position Indicator
717	Turbine Bypass Valve Position Indicator
719	Turbine Admission Valve Position Indicator
720	Turbine Load Limit Indicator
721	Main Steam Stop Valve (Control Switch with red, amber and green indicating lights)
722	Minimum Flow Bypass Valve Control Station with red, amber and green indicating lights
723	Turbine Bypass Valve Control Station with red, amber and green indicating lights
725	Turbine Admission Valve Control Station with red, amber and green indicating lights.
726	Turbine Load Limit Motor (Control Switch with red and green indicating lights)
727	115 volt a-c power receptacle

Fig. 803B-10 Main control panel, section I.

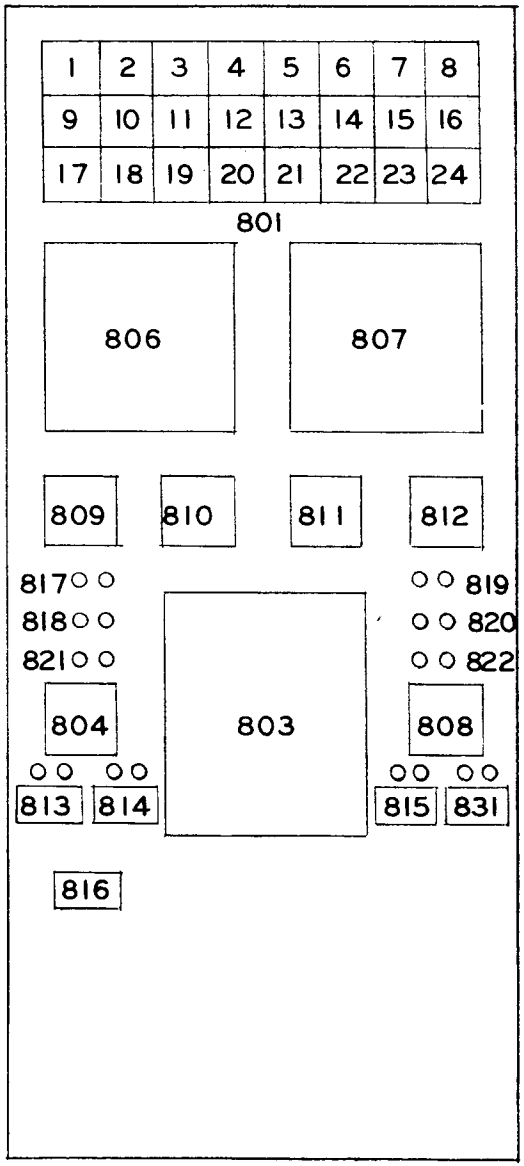

801 Annunciator:

Window No. 1	Generator Differential Relay Trip
Window No. 2	Generator-Transformer Differential Relay Trip
Window No. 3	Generator Field Failure Relay
Window No. 4	Generator Lockout Tripped
Window No. 5	Generator Neutral Over Current Relay
Window No. 6	Generator Field Ground Detector Relay
Window No. 7	Generator Negative Phase Sequence Trip
Window No. 8	Station Service Transformer-Overcurrent
Window No. 9	Station Service Transformer-Secondary Breaker Trip
Window No. 10	38-kv Bus Differential Relay Trip
Window No. 11	38-kv Generator Breaker Trip
Window No. 12	Aguada Line Breaker-Trip
Window No. 13	Rincon Line Breaker-Trip
Window No. 14	Generator OCB - Low Air Pressure
Window No. 15	Aguada OCB - Low Air Pressure
Window No. 16	Rincon OCB - Low Air Pressure
Window No. 17	Spare
Window No. 18	Spare
Window No. 19	Spare
Window No. 20	Hydrogen Control Cabinet - Default
Window No. 21	Generator H_2 Gas Temperature - High
Window No. 22	Spare
Window No. 23	Voltage Regulator Out of Service
Window No. 24	Generator Armature Temperature - High

803 Recorder, Generator Armature, Hydrogen and Exciter Air, and Bearings Temperatures

804 Recorder, Condenser Hotwell Level

805 Recorder, Condenser Vacuum

806 Recorder, Speed, Valve Position, and Eccentricity

807 Recorder, Vibration, Shell, and Differential Expansion

808 Multipoint Indicator, Turbine Throttle Steam, Turbine Steam Chest, Turbine First Stage, and Turbine Exhaust Steam Pressures

809 Power Unit for Turbine Supervisory Instruments

810 Power Unit for Turbine Supervisory Instruments

811 Power Unit for Turbine Supervisory Instruments

812 Power Unit for Turbine Supervisory Instruments

813 Control Switch, Cooling Water Pump No. 1 With Indicating Lights

814 Control Switch, Cooling Water Pump No. 2 With Indicating Lights

815 Control Switch, Turning Gear Remote Engaging Device With Indicating Lights

816 Control Switch, Solenoid Lubricating Oil Valve With Indicating Lights

817 Indicating Lights - Deep Well Pump

818 Indicating Lights - Booster Pump No. 1

819 Indicating Lights - Battery Charger No. 1

820 Indicating Lights - Battery Charger No. 2

821 Indicating Lights - Booster Pump No. 2

822 Provision for Indicating Lights

Fig. 803B-11 Main control panel, section J.

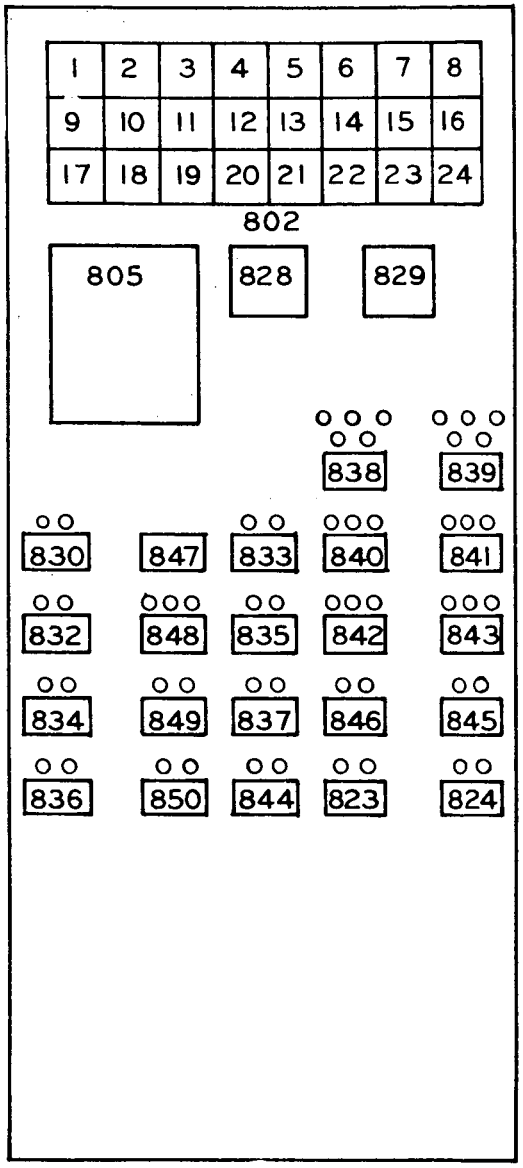

Item No.	Description
802	Annunciator: Window No. 1 Generator, Exciter and Turbine Bearing Temperature - High Window No. 2 Spare Window No. 3 Spare Window No. 4 Spare Window No. 5 Exciter Air In and Out Temperature - High Window No. 6 Spare Window No. 7 Battery Chargers No. 1 and No. 2 - Trip Window No. 8 Diesel Plant "ON" Window No. 9 Main Transformer High Temperature Window No. 10 Station Service Transformer High Temperature Window No. 11 DC Bus Ground Window No. 12 Outdoor Switchgear Supply Breaker - Tripped Window No. 13 440-Volt Bus Ground Window No. 14 440-Volt Bus Undervoltage Window No. 15 Spare Window No. 16 Spare Window No. 17 Spare Window No. 18 Spare Window No. 19 Spare Window No. 20 Spare Window No. 21 Spare Window No. 22 Spare Window No. 23 Spare Window No. 24 Spare
823	Control Switch and Indicating Lights - Traveling Screen No. 1
824	Control Switch and Indicating Lights - Traveling Screen No. 2
825	Spare
826	Spare
827	Spare
828	Ammeter, Condenser Water-Circulation Pump No. 1
829	Ammeter, Condenser Water-Circulation Pump No. 2
830	Control Switch, Auxiliary Lubricating Oil Pump (30 hp) With Indicating Lights
831	Control Switch, Turning Gear Motor With Indicating Lights
832	Control Switch, AC Bearing & Seal Oil Pump With Indicating Lights
833	Control Switch, DC Bearing & Seal Oil Pump With Indicating Lights
834	Control Switch, Turbine Gland Seal Exhauster No. 1 With Indicating Lights
835	Control Switch, Turbine Gland Seal Exhauster No. 1 With Indicating Lights
836	Control Switch, Turbine Oil Conditioner Pump With Indicating Lights
837	Control Switch, Condenser Hogging Pump With Indicating Lights
838	Control Switch, Condenser Water-Circulation Pump No. 1 With Indicating Lights
839	Control Switch, Condenser Water-Circulation Pump No. 2With Indicating Lights
840	Control Switch, Condenser Water-Circulation Inlet Valve No. 1 With Indicating Lights
841	Control Switch, Condenser Water-Circulation Inlet Valve No. 2 With Indicating Lights
842	Control Switch, Condenser Water-Circulation Outlet Valve No. 1 With Indicating Lights
843	Control Switch, Condenser Water-Circulation Outlet Valve No. 2 With Indicating Lights
844	Control Switch and Indicating Lights — Screen Wash Pump
845	Control Switch and Indicating Lights — Salt Water Bearing Pump
846	Control Switch and Indicating Lights — Cooling Tower Fan
847	Condensate Make-Up Valve Position Indicator
848	Control Switch and Indicating Lights Condensate Make-Up Valve
849	Control Switch and Indicating Lights Saturated Steam To Air Ejector Supply Valve
850	Control Switch and Indicating Lights Superheated Steam To Air Ejector Supply Valve

Fig. 803B-12 Main control panel, section K.

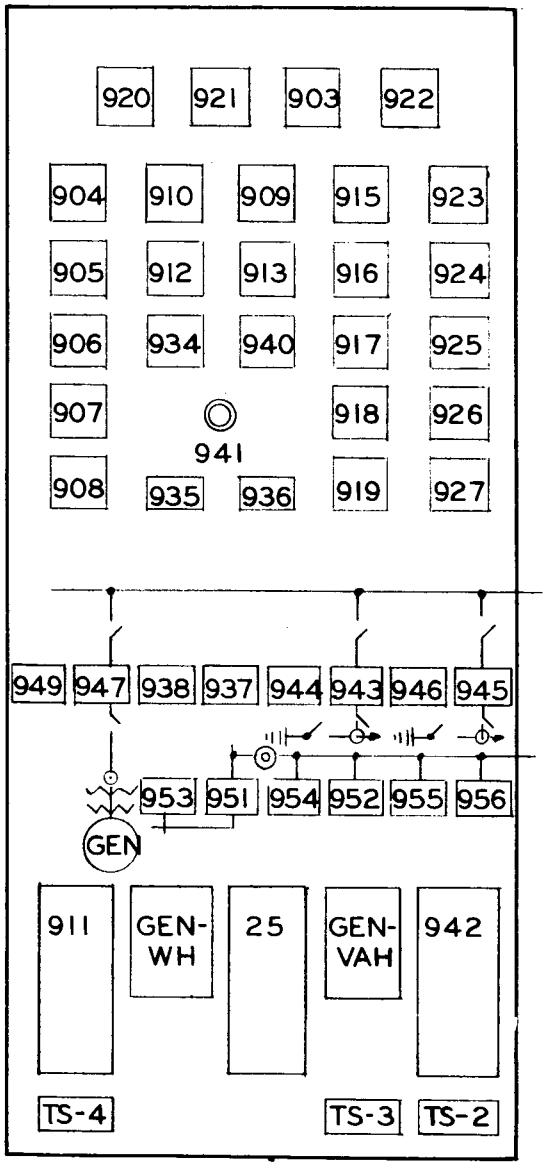

Item No.	Description
903	Synchroscope and Lights
904	Ammeter, Generator
905	Ammeter, Generator
906	Ammeter, Generator
907	Varmeter, Generator
909	Voltmeter, Generator
910	Temperature Indicator - Generator Armature
911	Recording Wattmeter, Generator
912	Ammeter, Generator Field
913	Voltmeter, Generator Field
914	Spare
915	Ammeter 38-kv Line No. 1
916	Ammeter 38-kv Line No. 1
917	Ammeter 38-kv Line No. 1
918	Varmeter 38-kv Line No. 1
920	Bus Voltmeter
921	Frequency Meter - Synchronizing
922	Line Voltmeter
928	Ammeter, Station Service Transformer
929	Ammeter, Station Service Transformer
930	Ammeter, Station Service Transformer
931	Varmeter, Station Service Transformer
932	Wattmeter, Station Service Transformer
933	Watthour Meter, Station Service Transformer
934	Temperature Indicator - Selector Switch
935	Control Switch, Voltage Regulator With Indicating Lights
936	Control Switch, Main Exciter Rheostat With Indicating Lights
940	Voltmeter Switch, Generator
941	Voltage Adjusting Rheostat
942	Voltage Regulator
943	Control Switch 38-kv Line No. 1 Breaker With Indicating Lights
944	Synchronizing Switch 38-kv Line No. 1
945	Control Switch 38-kv Line No. 2 Breaker With Indicating Lights
946	Synchronizing Switch 38-kv Line No. 2
947	Control Switch Generator Breaker With Indicating Lights
948	Synchronizing Switch, Generator
949	Test Switch for Generator Field Ground Realy
950	Control Switch 480-volt Station Transformer Secondary With Indicating Lights
951	Control Switch 480-volt Outdoor Switchgear Feeder Breaker With Indicating Lights
952	Control Switch Load Centers No. 1 & 2 Breakers With Indicating Lights
953	Control Switch Load Center No. 4 With Indicating Lights
954	Control Switch Load Center No. 3 With Indicating Lights
955	Control Switch Lighting Transformer With Indicating Lights
956	Control Switch Breaker Spare With Indicating Lights

Fig. 803B-13 Main control panel, section L.

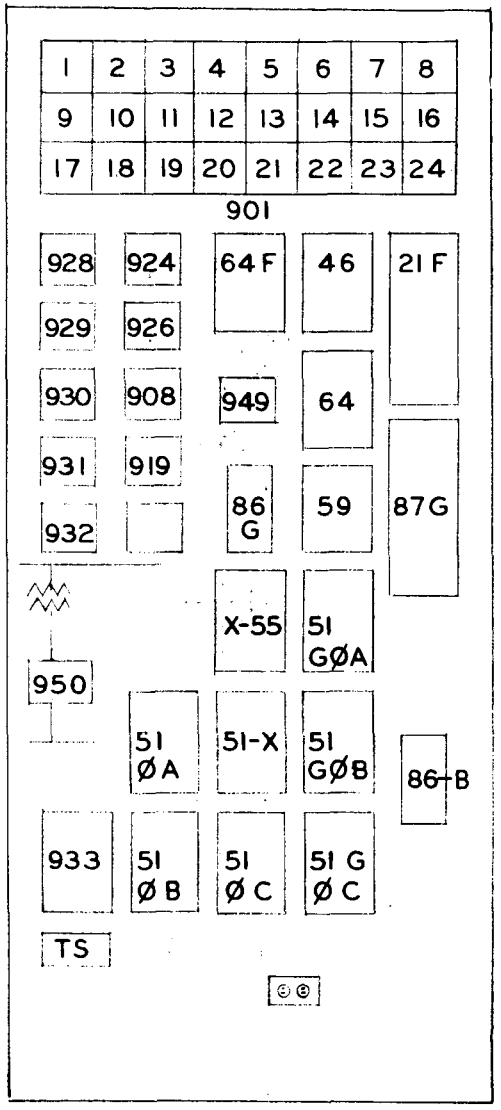

Item No.	Description
901	Annunciator:
	Window No. 1 Turbine Steam Seal Pressure - High
	Window No. 2 Turbine Steam Seal Pressure - Low
	Window No. 3 Turbine Oil Tank Vapor Extractor - Not in Service
	Window No. 4 Turbine Oil Filter Blower - Not in Service
	Window No. 5 Lubricating Oil Circulating Pump Flow - Low
	Window No. 6 Bearing Water-Condenser Circulation Pump No. 1 - Low Pressure
	Window No. 7 Bearing Water-Condenser Circulation Pump No. 2 - Low Pressure
	Window No. 8 Spare
	Window No. 9 Bearing Drain Enlargement Exhauster - Not in Service
	Window No. 10 Turbine Main Auxiliary Oil Pump - In Service
	Window No. 11 Turbine Gland Seal Exhauster - Trip
	Window No. 12 Turbine Bearing Oil Pressure - Low
	Window No. 13 Turbine Oil Tank Level - High
	Window No. 14 Turbine Oil Tank Level - Low
	Window No. 15 Turbine Trust Bearing Drain Temperature - High
	Window No. 16 Turbine Bearing No. 1 Temperature - High
	Window No. 17 Turbine Bearing No. 2 Temperature - High
	Window No. 18 Turbine Exhaust Hood Temperature - High
	Window No. 19 Thrust Failure Relay
	Window No. 20 Turbine Minimum Flow
	Window No. 21 Overspeed Trip
	Window No. 22 Condenser Vacuum - Low
	Window No. 23 Exhaust Steam Temperature
	Window No. 24 Spare
51	Overcurrent Relay
46	Negative Phase Sequence Overcurrent
87	Differential Relay B-Bus, U-Unit, G-Generator
64	Generator Ground Detector Relay
59	Overvoltage Relay
21F	Generator Field Failure Relay
86	Lock-Out Relay B-Bus, G-Generator
64F	Generator Field Ground Detector Relay

Fig. 803B-14 Main control panel, section M.

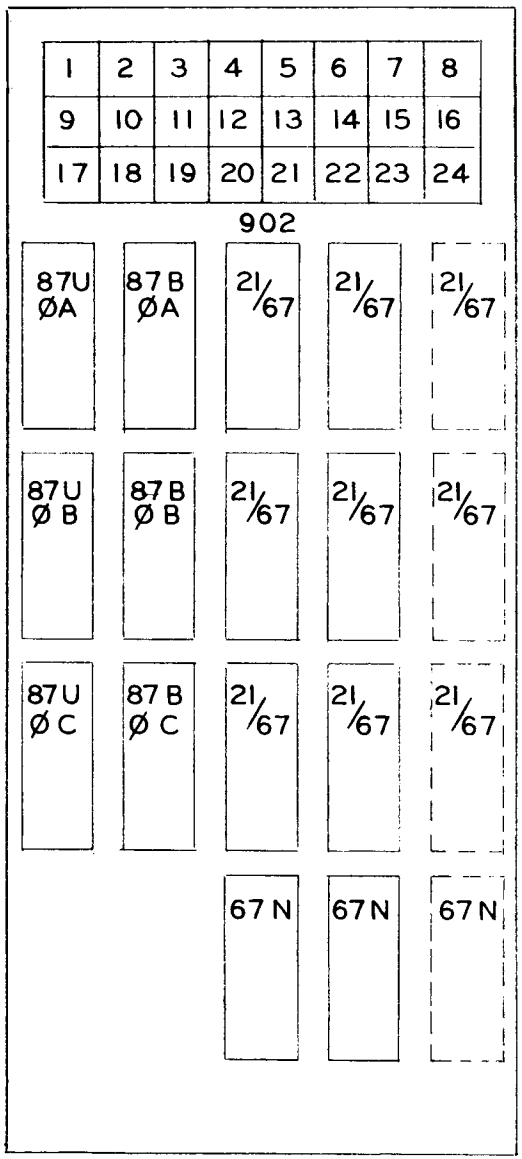

Item No.	Description
902	Annunciator:
	Window No. 1 Condenser Circulating Water-Inlet and Outlet Valves - Closed
	Window No. 2 Condenser Circulating Water Pumps 1 and 2 - Not in Service
	Window No. 3 Salt Water Pump - Not in Service
	Window No. 4 Raw Water - Condenser Circulating Water Pumps Bearings - In Service
	Window No. 5 Cooling Tower Fan - Not in Service
	Window No. 6 Cooling Water Header Pressure - Low
	Window No. 7 Cooling Tower Basin - Level
	Window No. 8 Condenser Circulating Water Pumps Discharge Header Pressure - Low
	Window No. 9 Booster Pump Suction Tank Level - Low
	Window No. 10 Zeolite Treated Water Tank Level - Low
	Window No. 11 Raw Water Storage Tank Level - Low
	Window No. 12 Salt Water Filter Motor - Overload
	Window No. 13 Spare
	Window No. 14 Condenser Hotwell East Section Level
	Window No. 15 Condenser Hotwell West Section Level
	Window No. 16 Spare
	Window No. 17 Circulating Water Pumps Discharge Valves Nos. 1 and 2 - Closed
	Window No. 18 Circulating Water Pumps Discharge Valves Nos. 1 and 2 - Open - Pumps Not in Service
	Window No. 19 Service Compressed Air Header Pressure - Low
	Window No. 20 Spare
	Window No. 21 Cooling Water High Temperature
	Window No. 22 Emergency DC Bearing and Seal Oil Pump - In Service
	Window No. 23 Emergency DC Bearing and Seal Oil Pump - Overload
	Window No. 24 Cooling Water Chemical System
21/67	Directional Distant Time Overcurrent Relay
67N	Ground Relay, Current and Potential Polarized
87U	Directional Relay Unit
87B	Directional Relay Bus

Fig. 803B-15 Main control panel, section N.

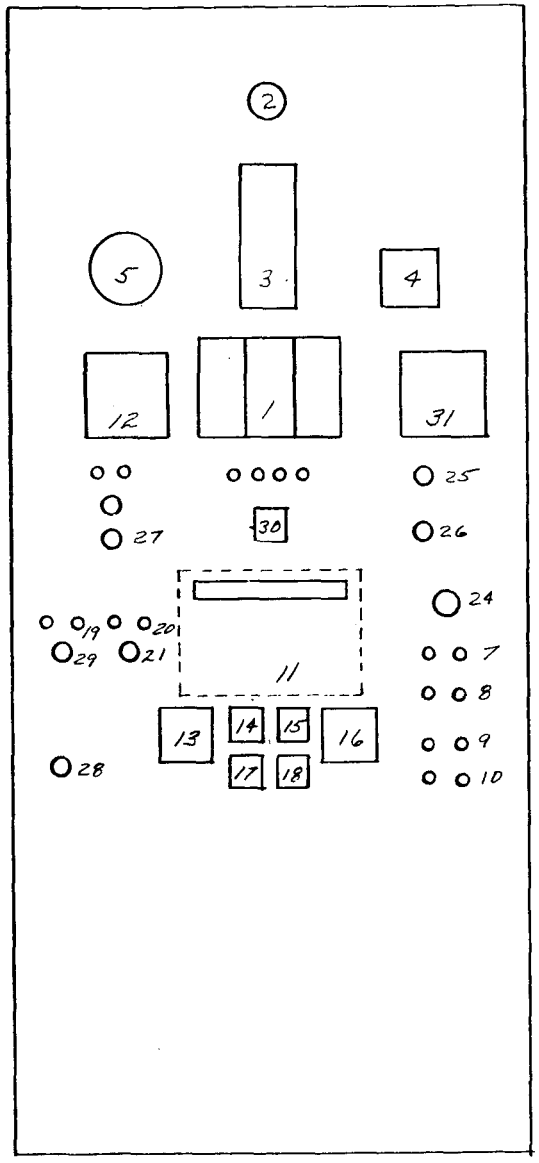

Detail No.	Description
1	Area Monitoring Indicator (.005 r/hr - 5000 r/hr) RA-1 Freight Door Area RA-2 Main Entrance Area RA-3 On Top of the Reactor Shield
2	"Reactor On" indicating light
3	Reactor Water Level Indicator
4	Reactor Pressure Indicator
5	Reactor Building Pressure Indicator
7-10	Galvanometer Control Patch Panel
11	Galvanometer Assembly
12	Fire Protection Storage Tanks No. 1, 2, 3, and 4 Recorder
13	Galvanometer Level Shunt
14	Deviation Galvanometer Range Slector
15	Galvanometer Deviation Milliammeter
16	Galvanometer Deviation Shunt
17	Galvanometer Deviation Fine Adjustment
19	Poison Tank Pressure Equalizing Valve red and green indicating lights
20	Poison Injection Valve red and green indicating lights
21	Poison Injection System Control Station
24	Scram Push Button
25	Emergency Core and Building Spray Valve Key Operated Control-Bypass Switch
26	Building Isolation Valves Key Operated Control-Bypass Switch
27	Main Steam Stop Valve Control Push Button Switch
28	Plant Maintenance System Telephone Jack
29	Spool Valve - Poison Tank Equalizing Valve
30	Control Switch and lights - Condenser Circulation Water Valves
31	Effluent Air Recorder

Fig. 803B-16 Pillbox control panel.

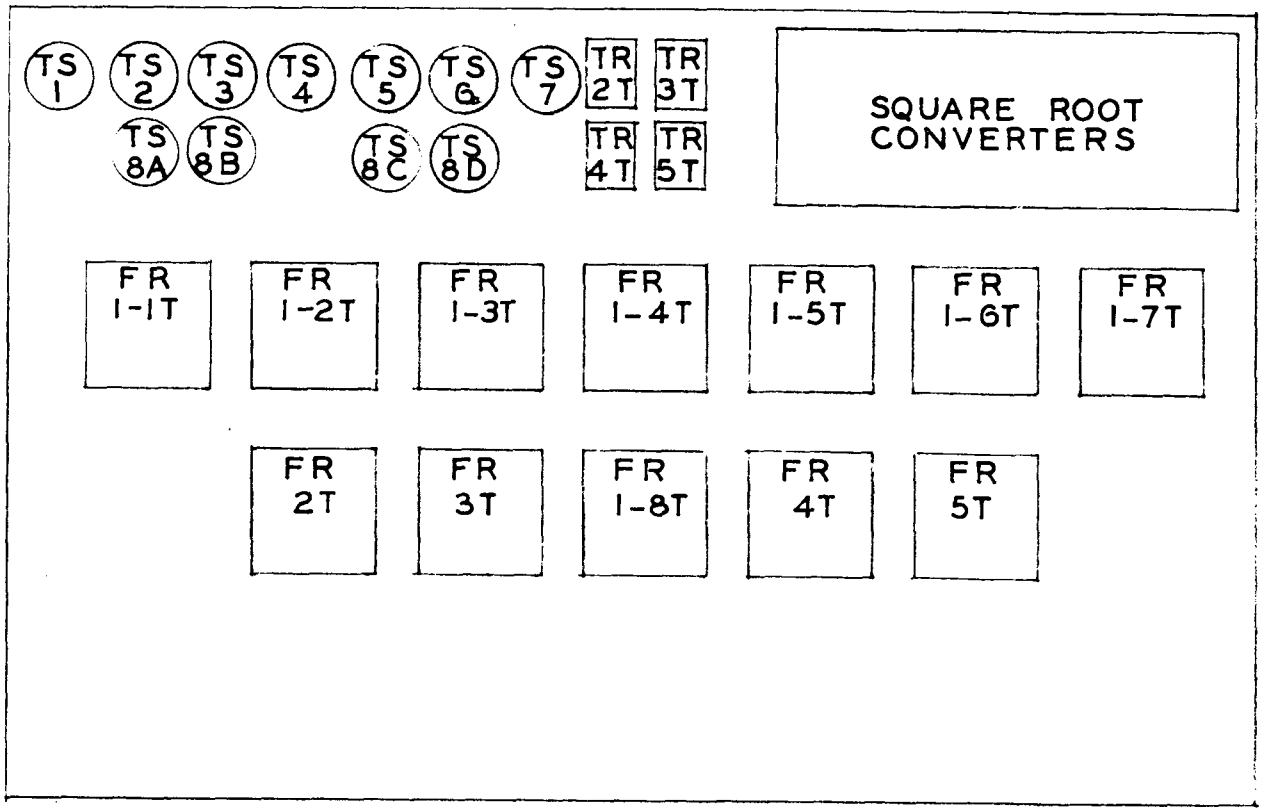

Detail No.	Description
TS-1	Superheater Outlet No. 11 Temperature Switch
TS-2	Superheater Outlet No. 12 Temperature Switch
TS-3	Superheater Outlet No. 13 Temperature Switch
TS-4	Superheater Outlet No. 14 Temperature Switch
TS-5	Superheater Outlet No. 15 Temperature Switch
TS-6	Superheater Outlet No. 16 Temperature Switch
TS-7	Superheater Outlet No. 17 Temperature Switch
TS-8A	Superheater Outlet No. 10A Temperature Switch
TS-8B	Superheater Outlet No. 10B Temperature Switch
TS-8C	Superheater Outlet No. 10C Temperature Switch
TS-8D	Superheater Outlet No. 10D Temperature Switch
TR-2T	Superheater Outlet No. 10A emf to Current Converter
TR-3T	Superheater Outlet No. 10B emf to Current Converter
TR-4T	Superheater Outlet No. 10C emf to Current Converter
TR-5T	Superheater Outlet No. 10D emf to Current Converter
FR-1-1T	Superheater Outlet No. 11 Flow Transmitters
FR-1-2T	Superheater Outlet No. 12 Flow Transmitters
FR-1-3T	Superheater Outlet No. 13 Flow Transmitters
FR-1-4T	Superheater Outlet No. 14 Flow Transmitters
FR-1-5T	Superheater Outlet No. 15 Flow Transmitters
FR-1-6T	Superheater Outlet No. 16 Flow Transmitters
FR-1-7T	Superheater Outlet No. 17 Flow Transmitters
FR-1-8T	Superheater Outlet No. 10 Flow Transmitters
FR-2T	Superheater Outlet No. 10A Flow Transmitters
FR-3T	Superheater Outlet No. 10B Flow Transmitters
FR-4T	Superheater Outlet No. 10C Flow Transmitters
FR-5T	Superheater Outlet No. 10D Flow Transmitters

Fig. 803B-17 Superheater auxiliary instrument panel.

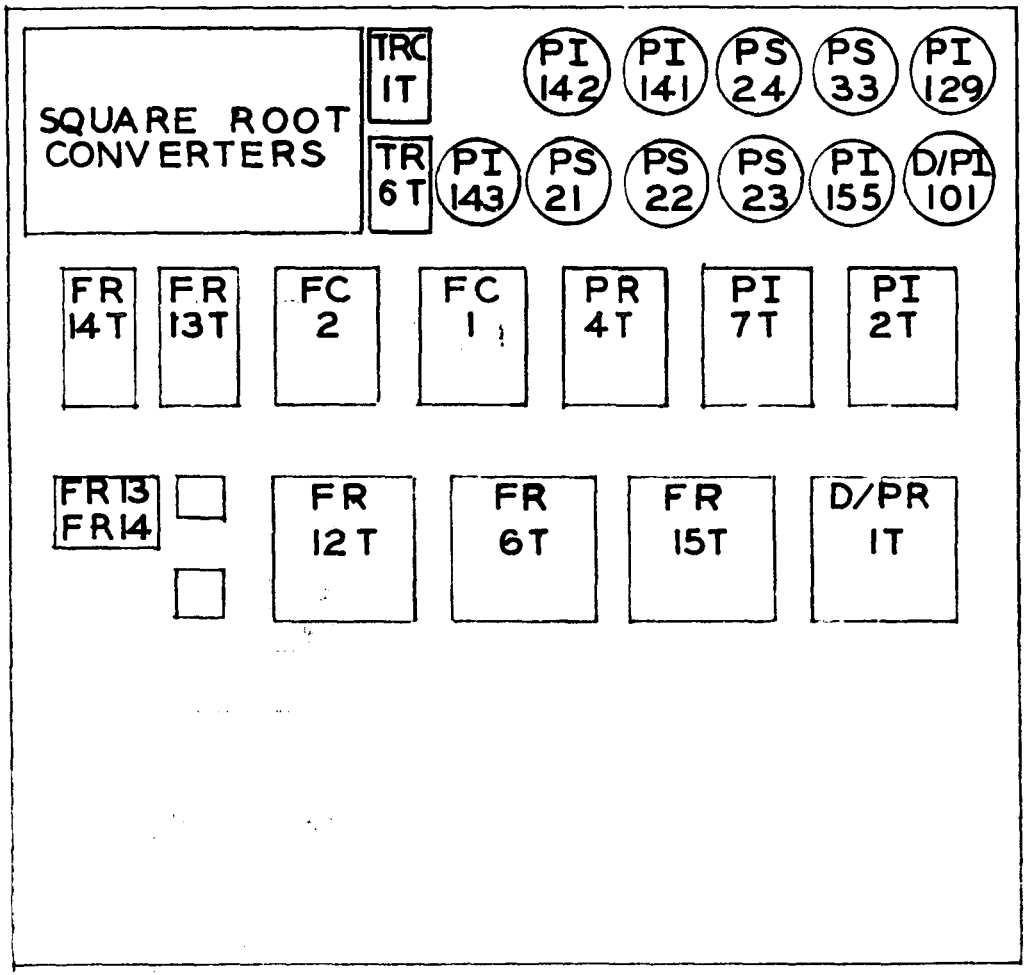

Detail No.	Description
PS-21	Feedwater Pump Inlet Header Low Pressure Alarm Pressure Switch
PS-22	Feedwater Pump Inlet Header Low Pressure Pump Interlock Pressure Switch
PS-23	Feedwater Pump Outlet Header Low Pressure Alarm Pressure Switch
PS-24	Feedwater Pump Outlet Header Low Pressure Scram Pressure Switch
PS-33	Feedwater Pump Outlet Header Low Pressure Scram Pressure Switch
PI-129	Main Steam Pressure Indicator
PI-141	Feedwater Pump Inlet Header Pressure Indicator
PI-142	Feedwater Pump No. 1 Outlet Pressure Indicator
PI-143	Feedwater Pump No. 2 Outlet Pressure Indicator
PI-155	Superheater Outlet Pressure Indicator
D/PI-101	Superheater Differential Pressure Indicator
PR-4T	Feedwater Pump Inlet Header Pressure Transmitter
PI-2T	Main Steam Pressure Transmitter
PI-7T	Feedwater Pump Outlet Header Pressure Transmitter
FR-6T	Main Steam Flow Transmitter
FR-12T	Feedwater Flow Transmitter
FR-15T	Bypass Steam Flow Transmitter
D/PR-1T	Superheater Differential Pressure Transmitter
TRC-1T	Main Steam Temperature emf to Current Converter
TR-6T	Superheater Outlet Steam Temperature emf to Current Converter
FR-13T	Feedwater Pump No. 1 Inlet Flow Transmitter
FR-14T	Feedwater Pump No. 2 Inlet Flow Transmitter
FC-1	Feedwater Pump No. 1 Recirculation Controller
FC-2	Feedwater Pump No. 2 Recirculation Controller
FR-13, FR-14	Feedwater Pump No. 1 Inlet Flow - Feedwater Pump No. 2 Inlet Flow Recorder

Fig. 803B-18 Reactor feedwater auxiliary instrument panel.

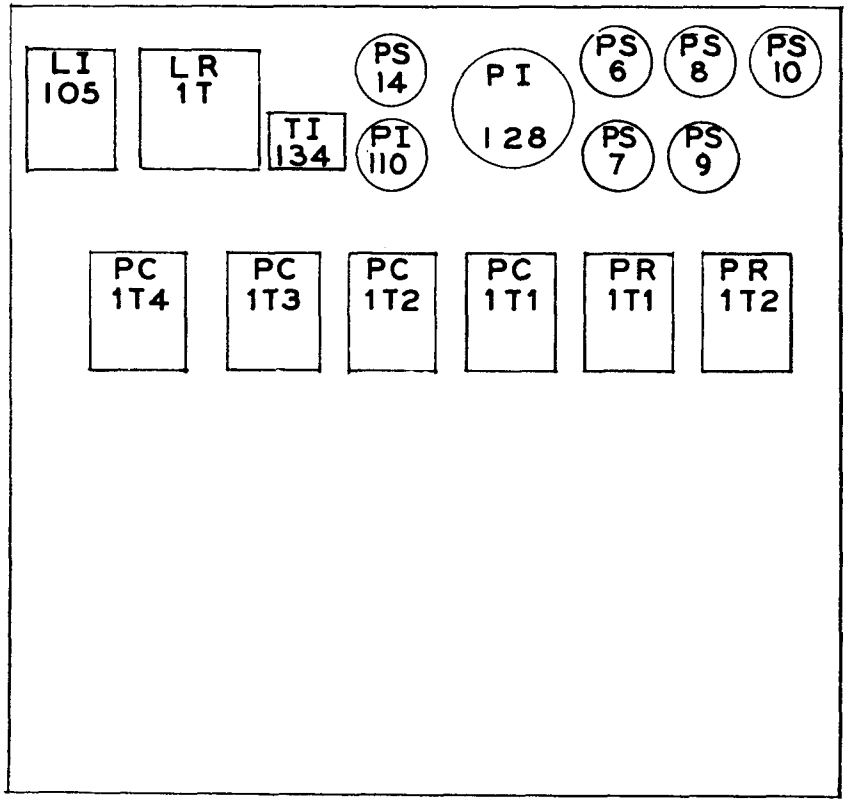

Detail No.	Description
LI-105	Reactor Water Level Indicator
TI-134	Fuel Pool Temperature Indicator
PI-110	Reactor Gasket Leakoff Pressure Indicator
PS-14	Reactor Gasket Leakoff High Pressure Alarm Switch
PS-6,7	Reactor High Pressure Scram Switch
PS-8,9	Reactor Low Pressure Scram Switch
PS-10	Preheater High-Pressure Alarm Switch
LR-1T	Reactor Water Level Transmitter
PI-128	Reactor Pressure Indicator
PC-1T1	Reactor Pressure Transmitter
PC-1T2	Reactor Pressure Transmitter
PC-1T3	Turbine Inlet Pressure Transmitter
PC-1T4	Turbine Inlet Pressure Transmitter
PR-1T1, 1T2	Reactor Pressure Transmitter and Computing Network

Fig. 803B-19 Reactor auxiliary instrument panel.

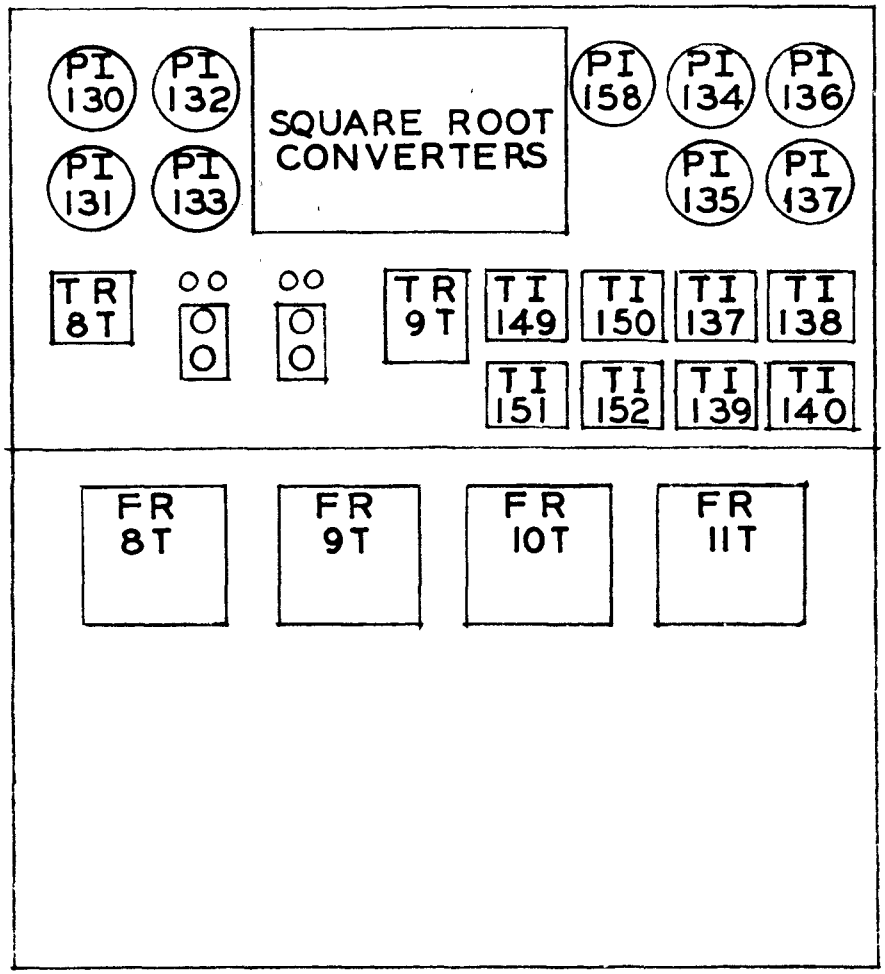

Detail No.	Description
PI-130	Reactor Circulating Water Pump No. 1 Outlet Pressure Indicator
PI-131	Reactor Circulating Water Pump No. 2 Outlet Pressure Indicator
PI-132	Reactor Circulating Water Pump No. 1 Inlet Pressure Indicator
PI-133	Reactor Circulating Water Pump No. 2 Inlet Pressure Indicator
PI-134	Reactor Purification Pump No. 1 Inlet Pressure Indicator
PI-135	Reactor Purification Pump No. 2 Inlet Pressure Indicator
PI-136	Reactor Purification Pump No. 1 Outlet Pressure Indicator
PI-137	Reactor Purification Pump No. 2 Outlet Pressure Indicator
PI-158	Reactor Preheater Inlet Water Pressure Indicator
FR-8T	Reactor Circulating Water Loop No. 1 Flow Transmitters
FR-9T	Reactor Circulating Water Loop No. 2 Flow Transmitters
FR-10T	Reactor Preheater and Shutdown Cooling Flow Transmitter
FR-11T	Reactor Purification Loop Flow Transmitter
TR-8T	Reactor Circulating Water Loop No. 1 Temperature emf to Current Converter
TR-9T	Reactor Circulating Water Loop No. 2 Temperature emf to Current Converter
--	Reactor Circulating Water Pump No. 1 Lube Oil Pump Control Switch
--	Reactor Circulating Water Pump No. 2 Lube Oil Pump Control Switch
TI-137	Reactor Circulating Water Pump No. 1 Motor Bearing No. 1 Temperature Indicator
TI-138	Reactor Circulating Water Pump No. 1 Motor Bearing No. 2 Temperature Indicator
TI-139	Reactor Circulating Water Pump No. 2 Motor Bearing No. 1 Temperature Indicator
TI-149	Reactor Circulating Water Pump No. 2 Motor Bearing No. 2 Temperature Indicator
TI-150	Reactor Circulating Water Pump No. 1 Pump Bearing No. 2 Temperature Indicator
TI-151	Reactor Circulating Water Pump No. 2 Pump Bearing No. 1 Temperature Indicator
TI-152	Reactor Circulating Water Pump No. 2 Pump Bearing No. 2 Temperature Indicator

Fig. 803B-20 Reactor auxiliary systems instrument panel.

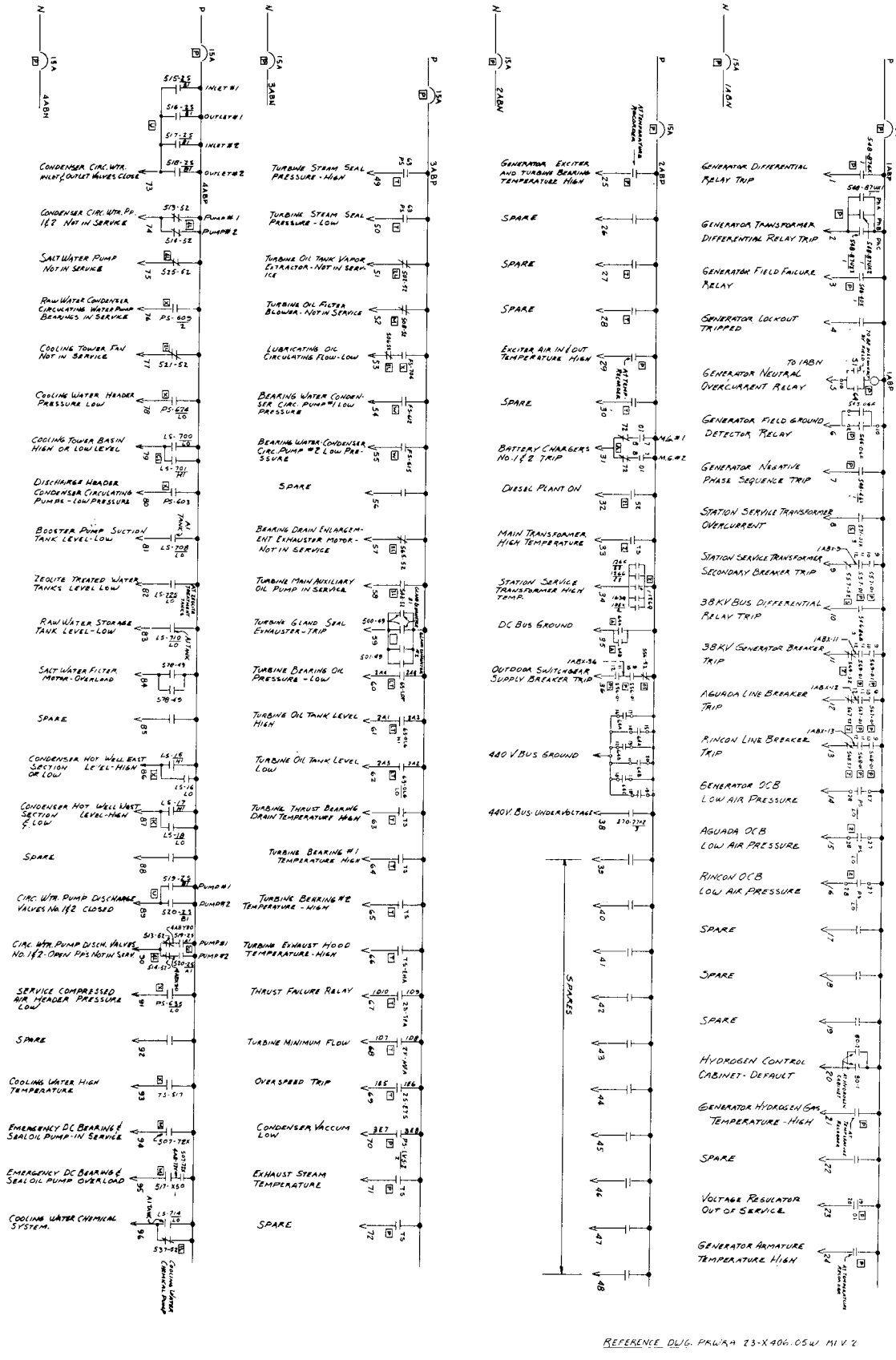

Fig. 803B-21 Single-line electric diagram plant annunciator - sheet 1.

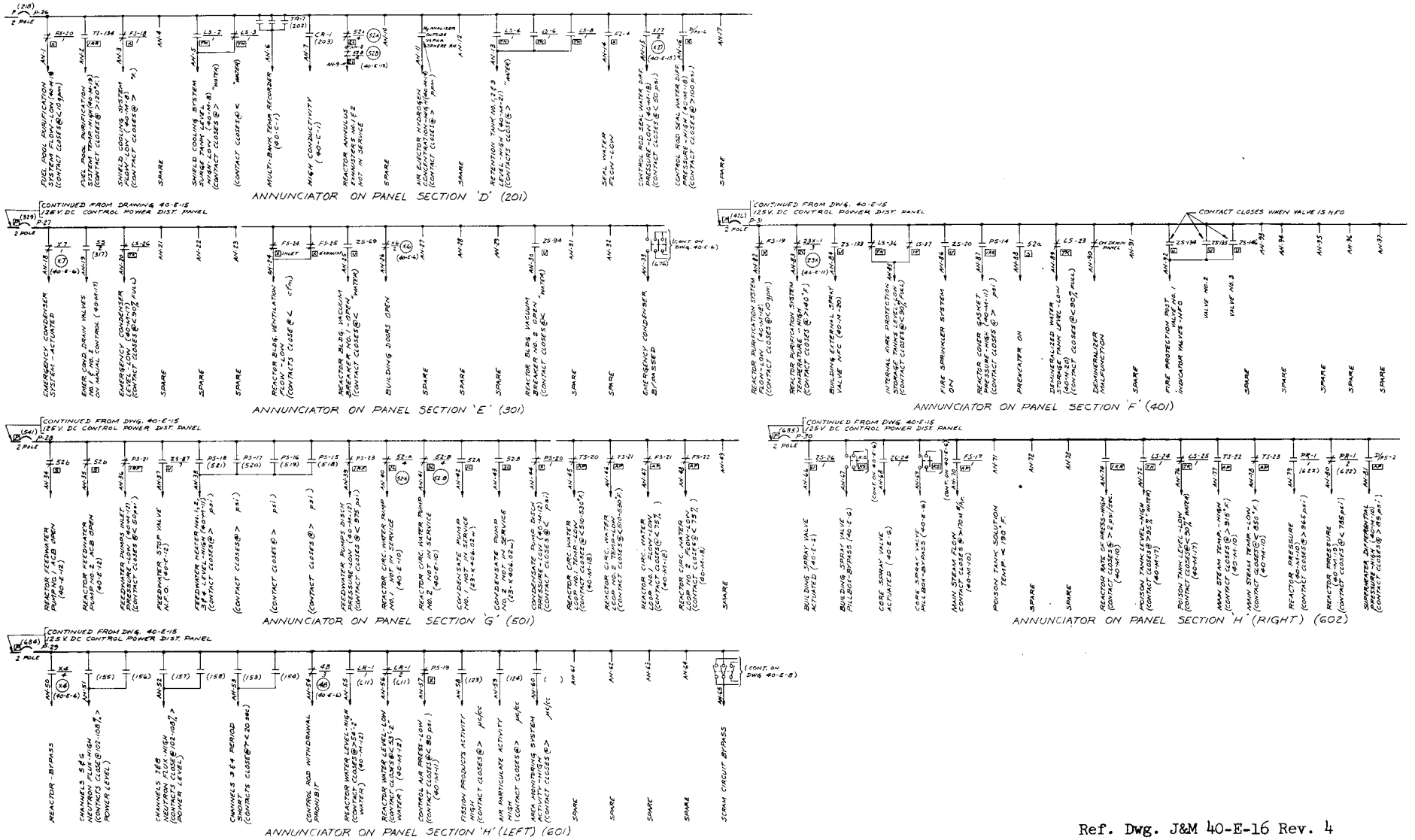

Ref. Dwg. J&M 40-E-16 Rev. 4

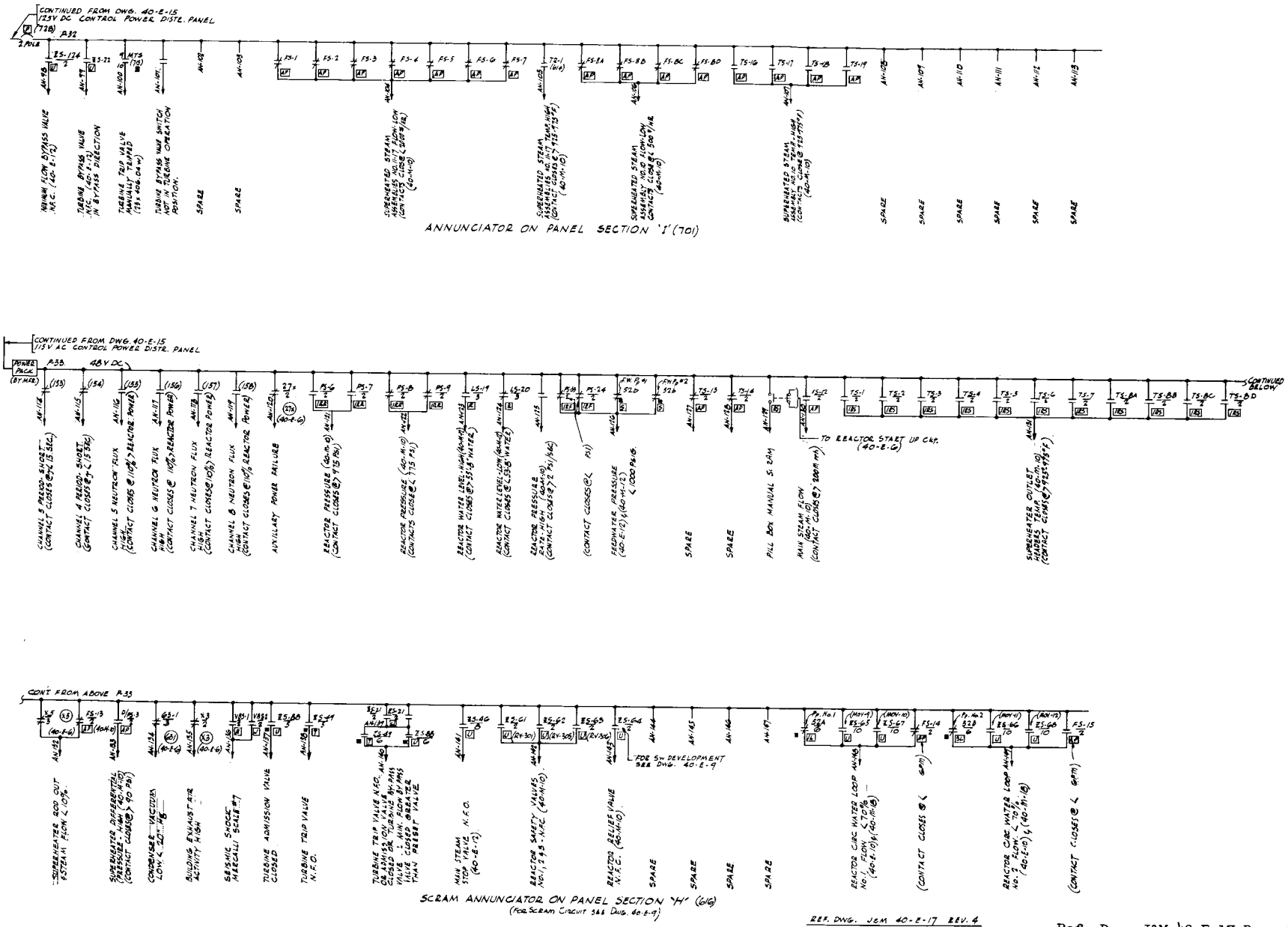

Ref. Dwg. J&M 40-E-17 Rev. 2

Fig. 803B-23 Single-line electric diagram plant annunciator - sheet 3.

900. CONTAINMENT BUILDING

901. GENERAL

The BONUS Station features a containment building which is different from the usual structures associated with nuclear power plants. The design is based on the total containment principle; i.e., the pressure-tight building houses not only the reactor and its associated auxiliaries, but also the turbine generator, electrical equipment, and control, service, and sanitary facilities. The total containment design philosophy was adopted over the conventional nuclear two-building arrangement where the reactor is housed within a smaller pressure shell and the turbine gear in a standard utility-type structure, since the former offered the following apparent advantages over the latter;

1) Reduced number of pressure-sealed mechanical and electrical penetrations, minimum runs of piping which require isolating valves.
2) The reduced pressure level simplifies such structures as the air locks, makes pressure sealing easier, and increases the chance of escape and survival by the operating personnel in the event an accident occurs and the building is pressurized with steam.
3) Improved communications and visual contact between operators; also, single building convenience provides operational safety and efficiency.
4) Because of the high water table at the BONUS site (approximately 1 ft above sea level), the shallow flat bottom permitted by the low-pressure building reduced excavation problems. A conventional containment building would go below sea level and the water table would be a problem.
5) Low pressure design is particularly well suited to use with composite concrete and steel structures which are attractive from a cost standpoint.

The over-all external appearance of the BONUS building can be seen on the site construction photographs, Figs. 901-1 and 901-2. Figure 901-3, a vertical elevation view of the containment building, shows the location of the air locks, freight door, access ladder, spray rings, and the shell and dome courses.

The pressure-tight building consists of the 166 ft-8-in.-dia. steel shell with hemispherical roof and the concrete foundation mat to which the steel shell is anchored. The soil substrata on which the foundation is poured is composed essentially of sand, silt, and sandstone; core subsurface explorations down to an average of 100 ft in depth showed that the substrata was sound and could withstand bearing loads of 3 tons per square foot. Figures 901-4, 901-5, 901-6 and 901-7 show the location of the 36 boring test holes, the measured water table, and the soil analysis data for each boring. A relatively large cavity appeared in borings DH-24 and 24A at about minus (-) 11 ft (39 ft below

original ground surface). Since this cavity was under the load-bearing foundation mat seven additional borings (not shown in Fig. 901-4) were made in the vicinity of DH-24 and 24A and the holes were pressure grouted. A total of 29 cubic yards of grout were required to fill DH-24 and 24A; seven additional cubic yards were pumped into the surrounding seven borings.

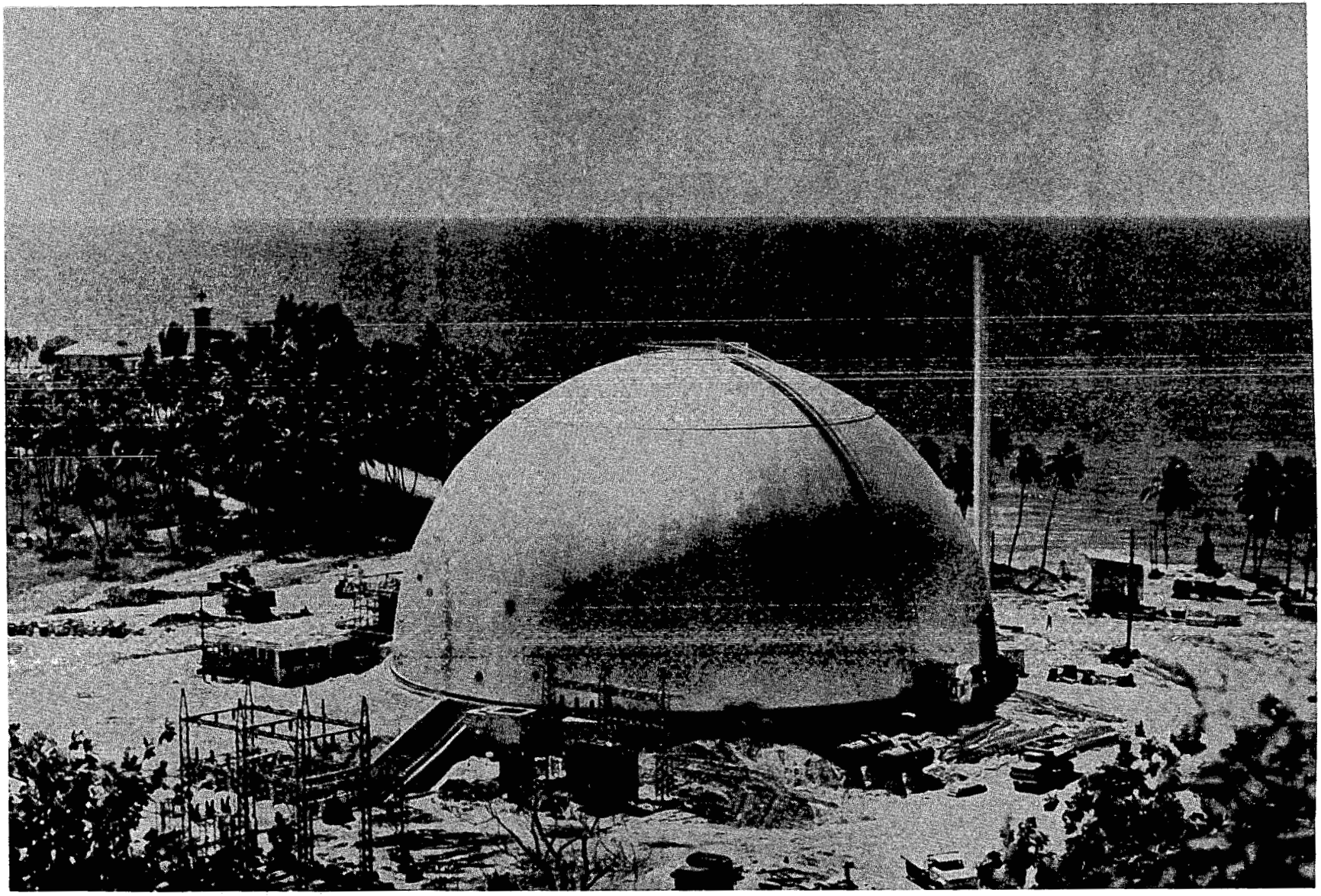

Fig. 901-1 Site construction view looking southwest (October, 1961).

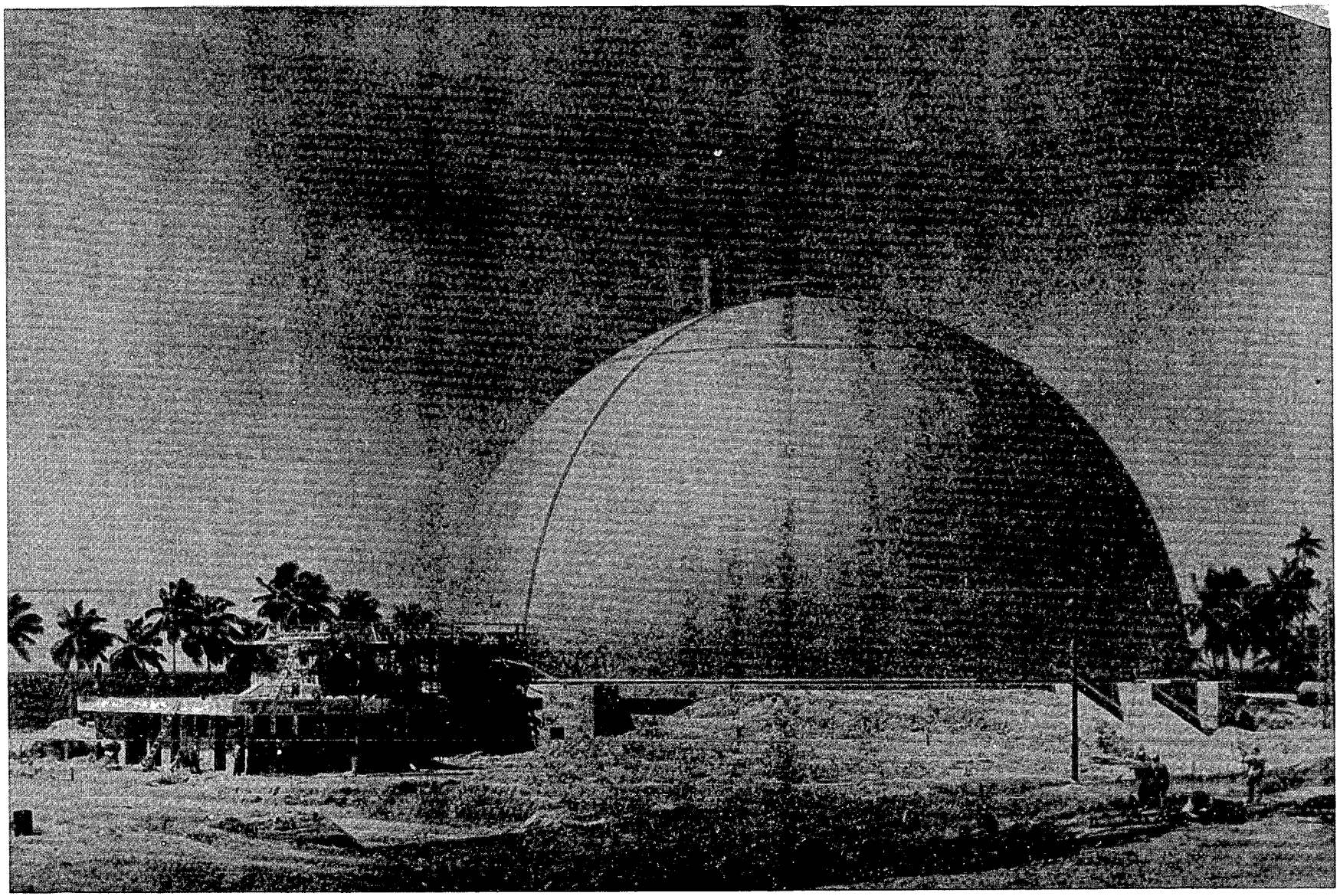

Fig. 901-2 Site construction view looking northwest (October, 1961).

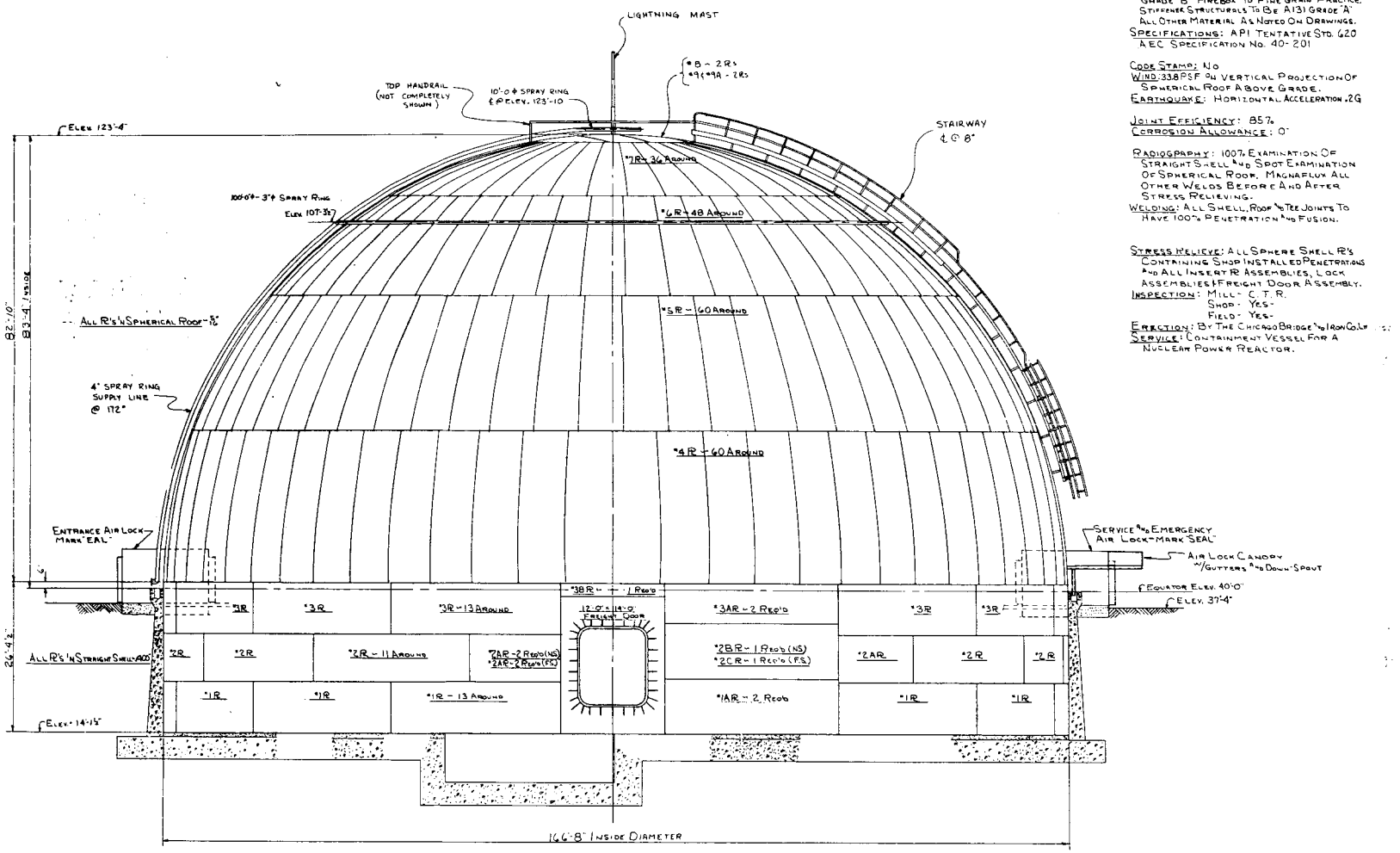

GENERAL AND DESIGN NOTES

DESIGN PRESSURE: 5 PSIG
DESIGN TEMPERATURE: 140°F
MATERIAL SPEC'S: ALL SHELL R'S TO BE A 201 GRADE 'B' FIREBOX TO FINE GRAIN PRACTICE. STIFFENER STRUCTURALS TO BE A 131 GRADE 'A' ALL OTHER MATERIAL AS NOTED ON DRAWINGS.
SPECIFICATIONS: API TENTATIVE STD. 620 AEC SPECIFICATION NO. 40-201

CODE STAMP: NO
WIND: 338 PSF ON VERTICAL PROJECTION OF SPHERICAL ROOF ABOVE GRADE.
EARTHQUAKE: HORIZONTAL ACCELERATION .2G

JOINT EFFICIENCY: 85%
CORROSION ALLOWANCE: 0"

RADIOGRAPHY: 100% EXAMINATION OF STRAIGHT SHELL AND SPOT EXAMINATION OF SPHERICAL ROOF. MAGNAFLUX ALL OTHER WELDS BEFORE AND AFTER STRESS RELIEVING.
WELDING: ALL SHELL, ROOF AND TEE JOINTS TO HAVE 100% PENETRATION AND FUSION.

STRESS RELIEVE: ALL SPHERE SHELL R'S CONTAINING SHOP INSTALLED PENETRATIONS AND ALL INSERT R ASSEMBLIES, LOCK ASSEMBLIES, FREIGHT DOOR ASSEMBLY.
INSPECTION: MILL - C.T.R.
SHOP - YES
FIELD - YES
ERECTION: BY THE CHICAGO BRIDGE AND IRON CO.
SERVICE: CONTAINMENT VESSEL FOR A NUCLEAR POWER REACTOR.

ELEVATION VIEW
LOOKING WEST

Ref. Dwg. CB&I No. 1 (8-2030)

Fig. 901-3 Elevation view of containment building.

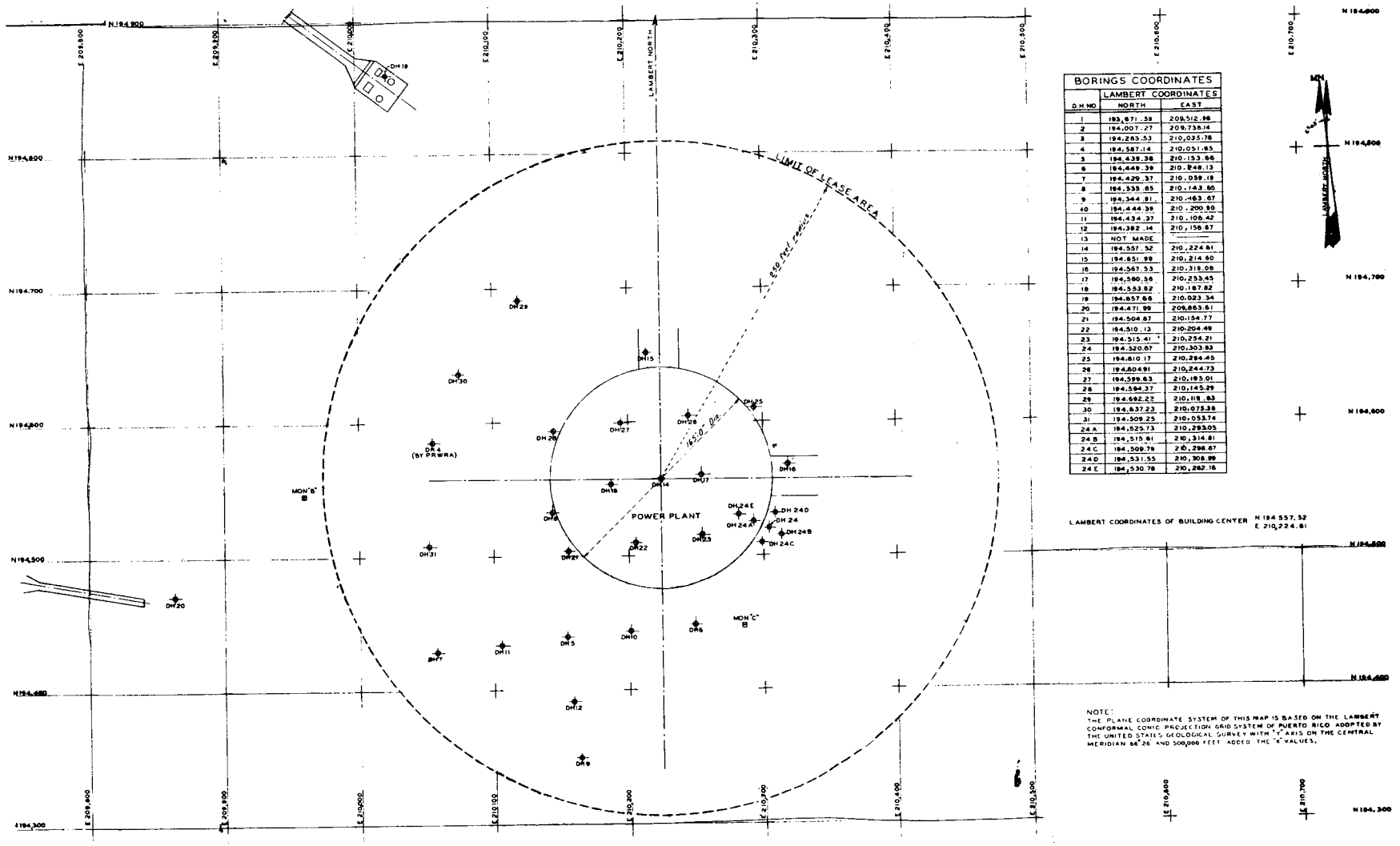

BORINGS COORDINATES

DH NO	LAMBERT COORDINATES NORTH	EAST
1	193,871.59	209,512.88
2	194,007.27	209,739.16
3	194,283.53	210,035.78
4	194,587.14	210,051.85
5	194,439.38	210,153.66
6	194,448.39	210,248.13
7	194,429.37	210,059.19
8	194,533.85	210,143.86
9	194,344.81	210,463.67
10	194,444.39	210,200.90
11	194,434.37	210,108.42
12	194,382.14	210,156.67
13	NOT MADE	———
14	194,557.52	210,224.81
15	194,651.99	210,214.60
16	194,567.53	210,319.08
17	194,580.58	210,253.45
18	194,553.62	210,187.82
19	194,657.66	210,023.34
20	194,471.99	209,853.61
21	194,504.87	210,154.77
22	194,510.13	210,204.49
23	194,515.41	210,254.21
24	194,520.67	210,303.83
25	194,610.17	210,284.45
26	194,604.91	210,244.73
27	194,599.63	210,195.01
28	194,594.37	210,145.29
29	194,692.22	210,118.83
30	194,637.23	210,073.38
31	194,509.25	210,053.74
24 A	194,525.73	210,293.05
24 B	194,515.81	210,314.81
24 C	194,509.78	210,298.87
24 D	194,531.55	210,308.99
24 E	194,530.78	210,262.16

Ref. Dwg. PRWRA 23-A102W

Fig. 901-4 Test borings plan.

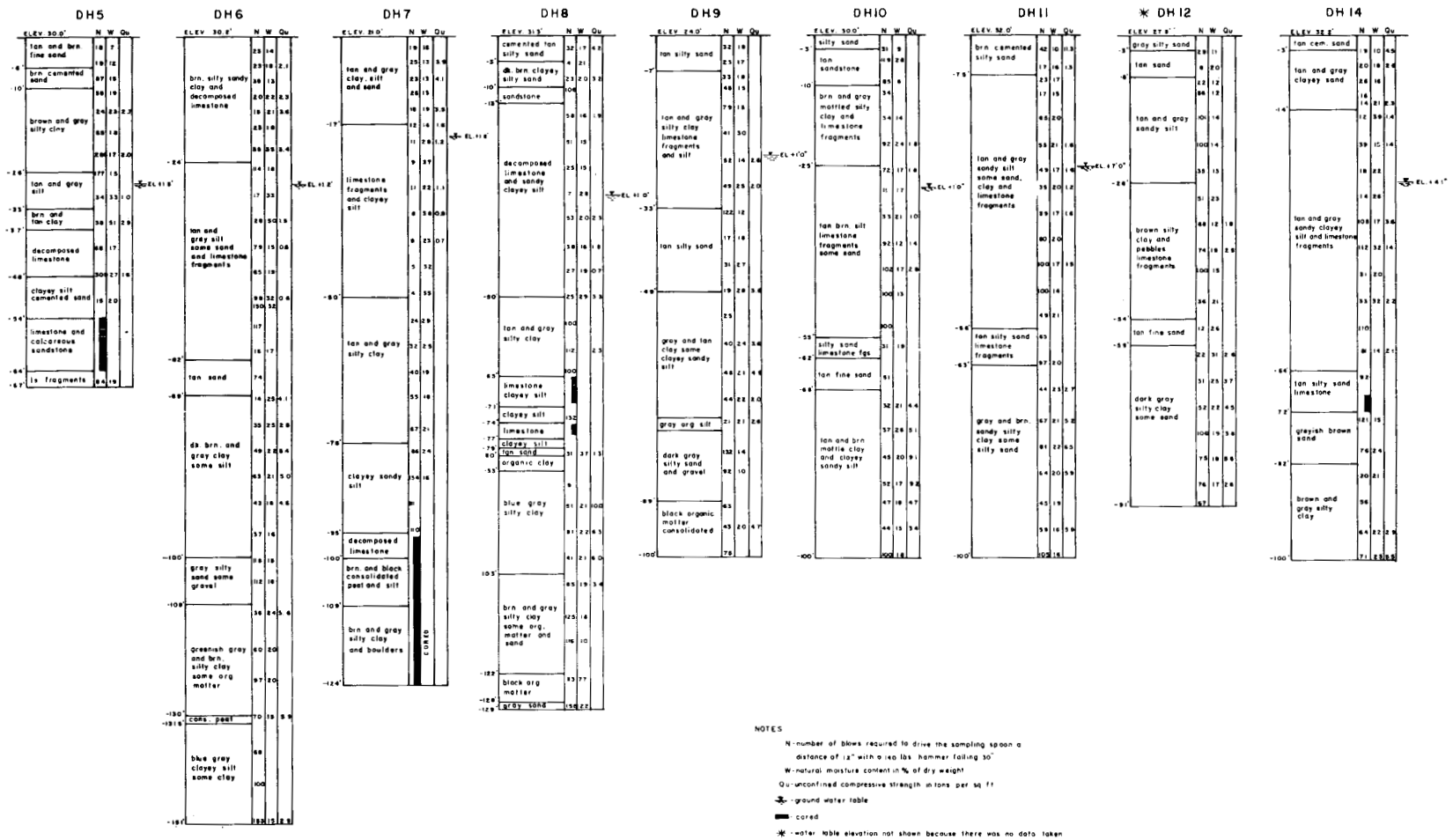

Fig. 901-5 Test boring log data - sheet 1 of 3.

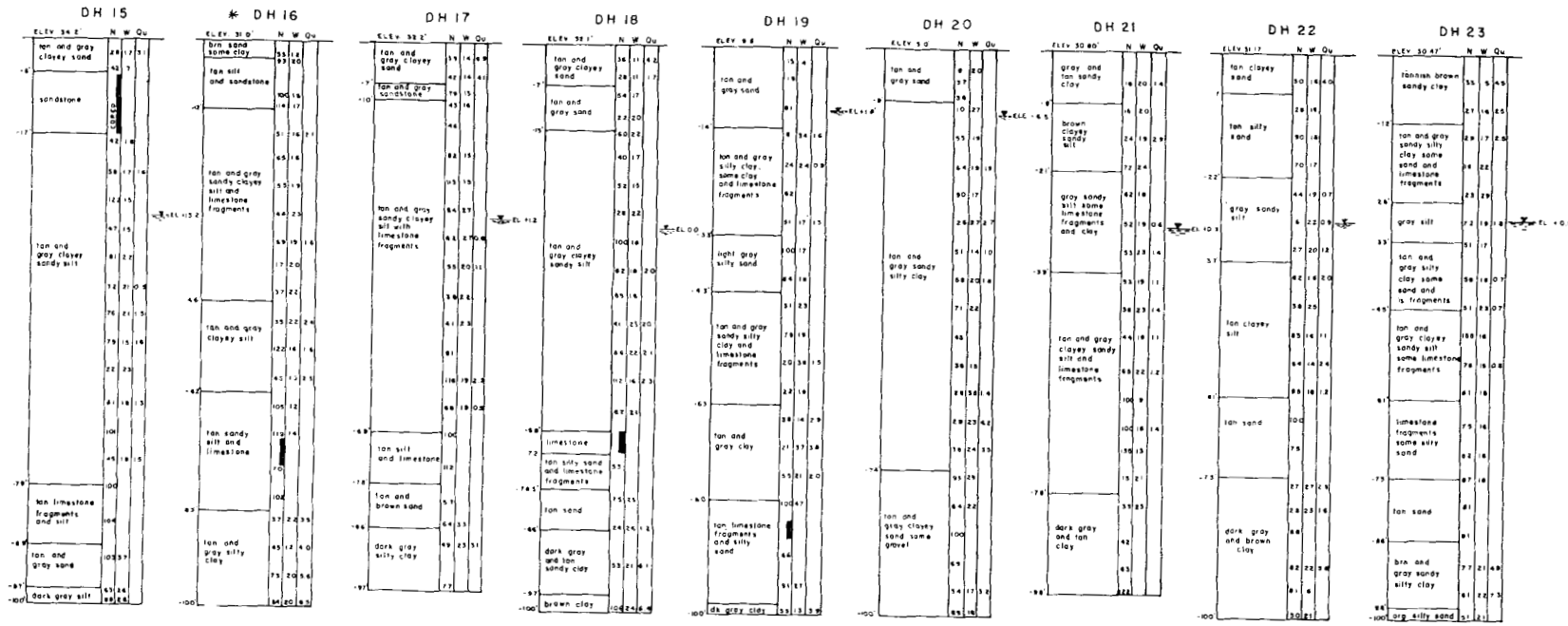

Fig. 901-6 Test boring log data - sheet 2 of 3.

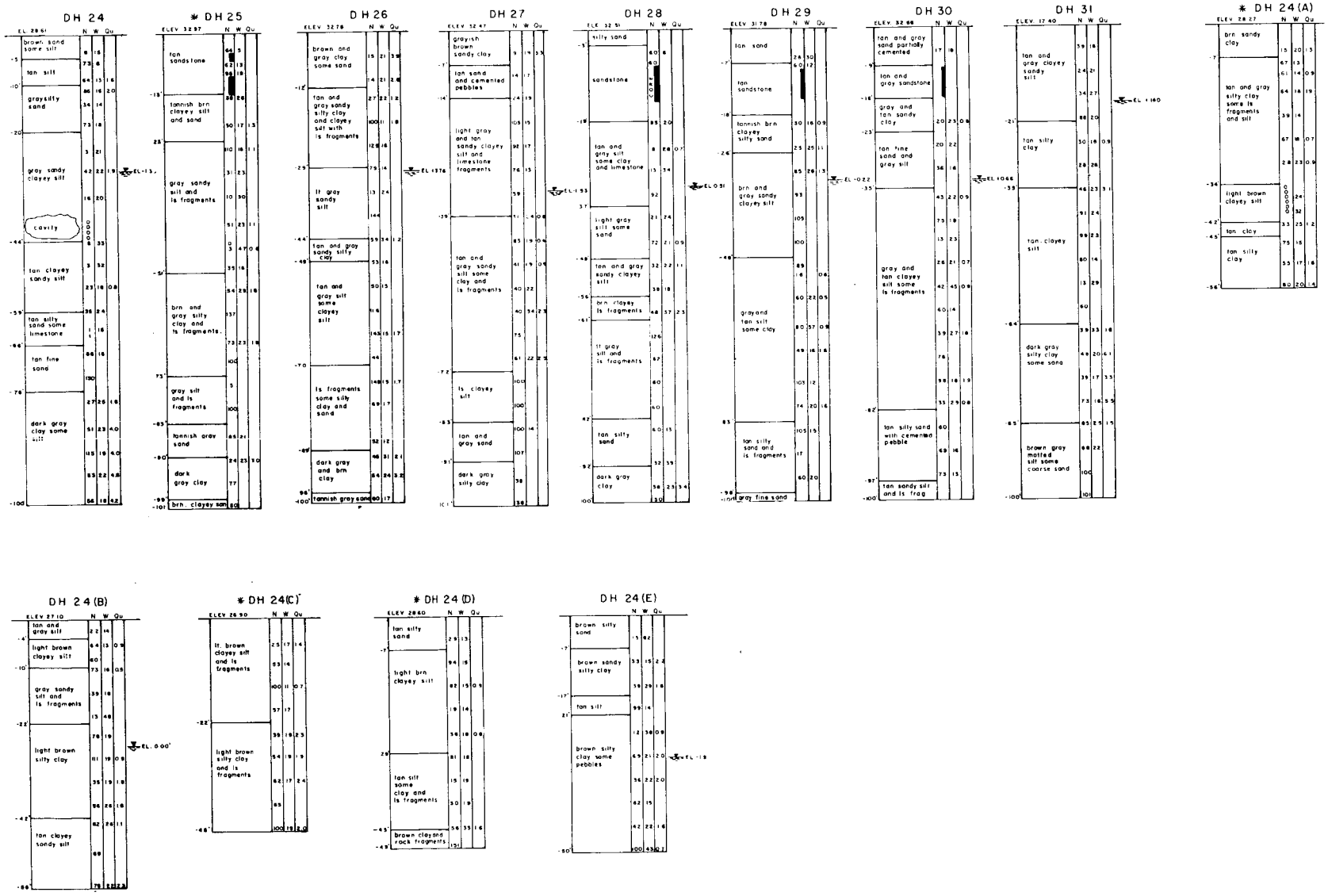

Fig. 901-7 Test boring log data - sheet 3 of 3.

902. SHELL AND DOME STEEL STRUCTURE

The steel portion of the building is designed by Chicago Bridge and Iron Co. in accordance with the requirements of API Tentative Standard 620 - "API Recommended Rules for the Design and Construction of Large, Welded Low-Pressure Storage Tanks," supplemented by the more stringent requirements of the ASME proposed American Standard ASA-N6 "Safety Code for Design, Fabrication, and Maintenance of Containment Structures for Stationary Atomic Power Plants." The design conditions for the containment building are the following: internal pressure, 5 psig; external collapse pressure, 1/4 psig; wind speed, 150 mph; horizontal seismic load coefficient, 0.20; leakage rate, not to exceed 0.2 per cent of the building net volume per day with internal 5-psig pressure.

The 26-ft, 4-in.-high, 166-ft, 8-in. inside diameter cylindrical shell portion of the building is fabricated from 13/32-in.-thick A201 Gr B steel plate; all plate weld joints were 100 per cent radiographed and vacuum-box-tested at 5 psig to insure sound welds and gas-pressure tightness prior to pouring the surrounding concrete retainer wall, described in Section 904. Two rows of 5-in. x 3-in. angle ring stiffeners at elevation 24 ft, 4 in. and 32 ft, 11 in. reinforce the shell for the external pressure loads. The 166 ft, 8 in. inside diameter hemispherical dome roof portion of the building is fabricated from 5/16-in.-thick plate reinforced with 8-in.-deep radial tee-shaped stiffeners. The roof plate weld joints between individual plates and shell junction were radiographed in accordance with the spot radiographic procedures outlined in API Tentative Standard 620.

The shell portion of the building between elevations 14 ft, 1-1/2 in. and 40 ft, 6 in. is made up of three shell courses as shown in Fig. 901-3.

The lower 12 inches of the steel cylindrical shell is welded to a ring of 4-in.-wide x 1/2-in.-thick flat steel bars spaced on 1-ft centers and embedded in the 182-ft-dia. reinforced concrete foundation mat. The 4 ft-7-1/2-in.-long anchor bars extend to within 6 inches of the bottom of the foundation mat and are alternately placed on the inside and outside of the shell to which they are welded. These anchor bars are designed to resist an upward lifting force of 19.5 million pounds which results on pressurizing the building at 6.25 psig (structural proof test pressure). This lift force on the foundation mat is counteracted by the static mass weight of the 18-in.-thick concrete retaining wall around the shell, which extends from the top of the foundation mat (13 ft, 6 in.) to elevation 40 ft, 0 in., the weight of a portion of the foundation mat and internally supported structures, and by the weight of the granular fill between these two elevations. The factor of safety against uplift of the building when exposed to an internal pressure of 6.25 psig resulting from the forementioned weights is approximately 2.0.

903. FOUNDATION MAT

The concrete foundation mat, which is poured directly on the soil base, consists of 15 individual monoliths, shown in plan on Fig. 903-1 and in elevation on Fig. 903-2, and in site construction photographs Figs. 903-3, and 903-4. Each monolith is tied to an adjacent monolith for strength by reinforcing steel dowels. The size and number of the reinforced monoliths made from 3500-psi-strength concrete was established by the production capacity of the on-site concrete plant. The construction joints between the individual monoliths are made pressure-tight with polyvinyl waterstops midway through the slab thickness and elastic joint sealing compound poured in the construction joint slots on the top surface of the foundation mat. The method of sealing the construction joint slots and joints between the concrete and embedded steel items are described in Section 905-A. The mat thickness is 3.5 ft throughout, except locally below the reactor where the base thickness of the steel-lined recessed pit portion is 6 ft and directly below the reactor and fuel storage pool structures where the raised foundation is steel lined and 5 ft, 4 in. thick.

The intake and discharge sea water tunnels for the condenser are an integral part of the underside of the foundation mat; the divider and external walls of the 3.0-ft x 3.5-ft tunnel openings are constructed of 5000-psi compressive strength concrete for the salt water service. Flanged pipe sleeves, for connection to the condenser intake and discharge nozzles, are embedded in the foundation mat.

At the periphery of the foundation mat, as shown in Fig. 904-1, an 8-in.-dia. perforated clay drain pipe ring embedded in a 4-ft-deep layer of crushed stone collects rain runoff from the building and surrounding backfill, and prevents hydraulic pressure buildup in the space between the steel shell and retainer wall. A flexible flashing ring, anchored to the building and to the top of the retainer wall, prevents water from entering this space. Any water that seeps into this space drains to the drain ring through weep holes in the retainer wall.

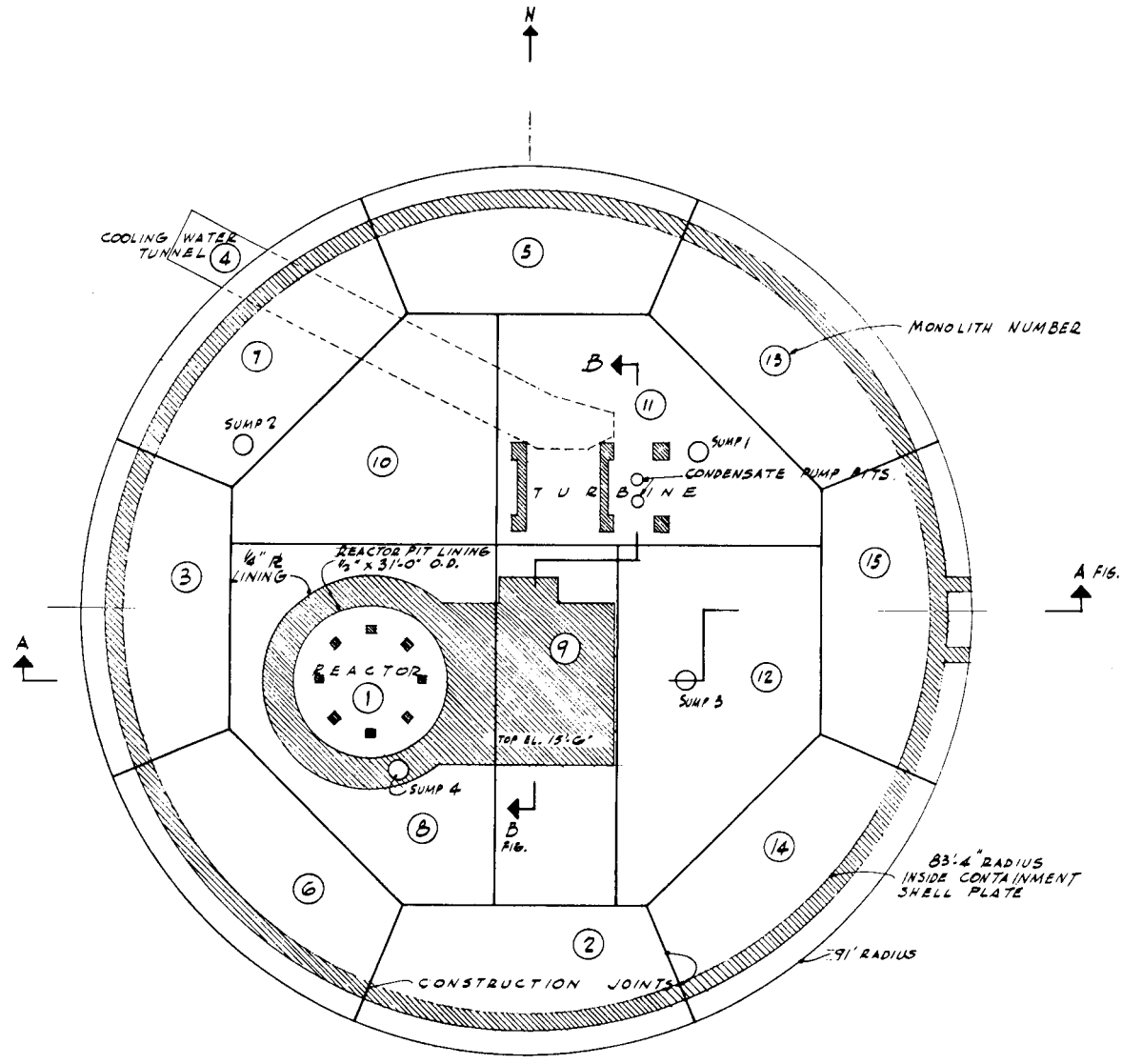

REF. DWG. JM 40-5-2 (REV. 3).

Fig. 903-1 Simplified plan of foundation mat.

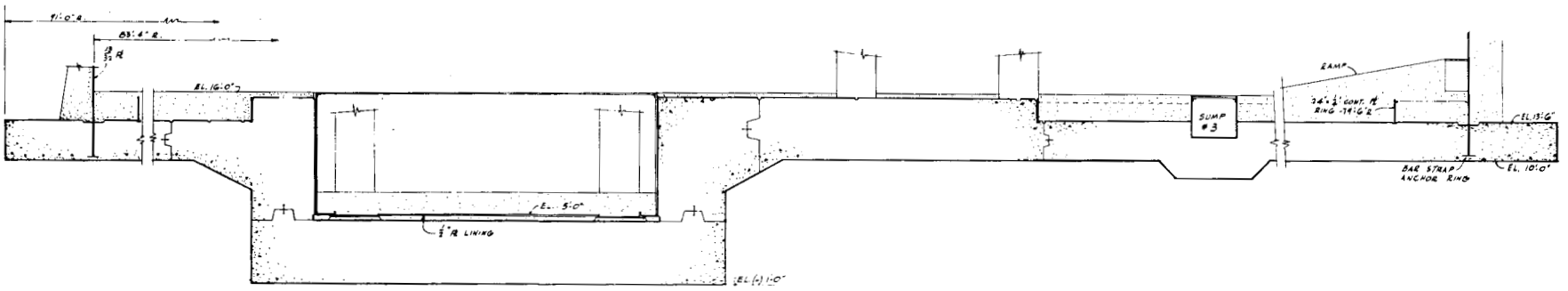

SECTION A-A FIG. 903-1

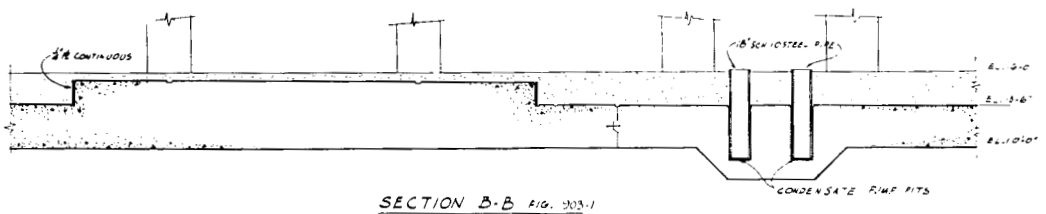

SECTION B-B FIG. 903-1

REF. DWG. JM 40-5-3 (REV 2)

Fig. 903-2 Sectional elevation of foundation mat.

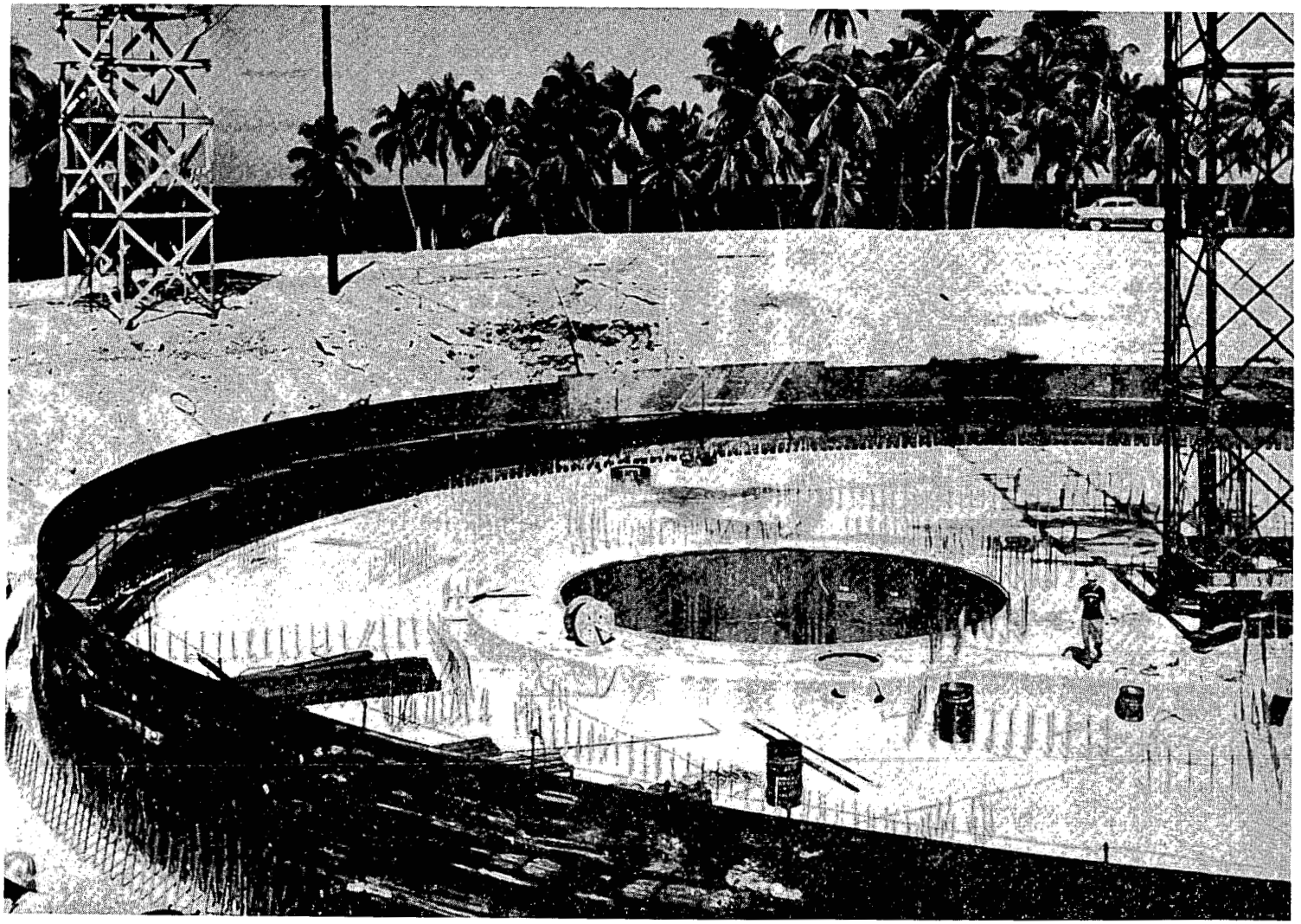

Fig. 903-3 Site construction photograph showing foundation mat in vicinity of reactor.

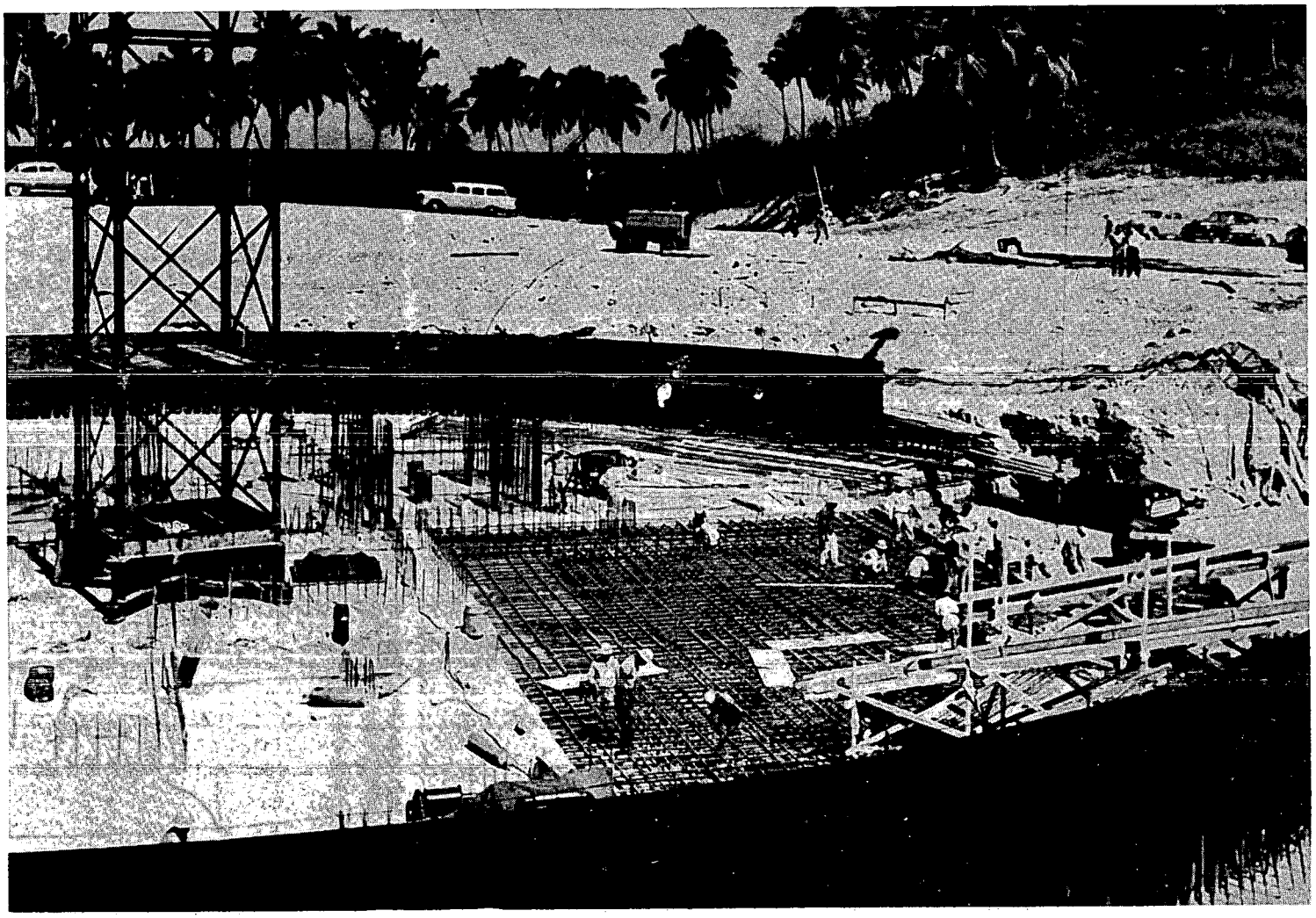

Fig. 903-4 Site construction photograph showing placement of reinforcing steel for foundation mat.

904. RETAINER WALL

The main function of the circular retainer wall that surrounds the shell and extends from the top of the foundation mat to elevation 40 ft is to prevent the lateral pressure due to the surrounding backfill from acting on the cylindrical shell portion of the building. The static weight of the wall and the corresponding weight of the granular backfill on the outer annular portion of the foundation mat, resist the uplift force resulting when the building is under internal pressure. The wall reinforcing steel and wall shape have been designed to resist a static horizontal earth pressure loading of 1490 psf in combination with a horizontal seismic loading of 620 psf (seismic factor of 0.2 applied to mass of wall and earth backfill). The wall thickness from elevation 40 ft, 0 in. down to elevation 22 ft, 6 in., is 18 inches, and from elevation 22 ft, 6 in. down to elevation 13 ft, 6 in. the wall is battered with slope of 2 in. per ft; the corresponding thickness at the base is 3 ft, 0 in.

The retainer wall is anchored to the foundation mat by interconnecting dowels and is formed from five (5) vertical pours of 3500 psi strength concrete as shown in Fig. 904-1. The retainer wall construction did not commence until after the radiographic and vacuum tests of the building shell portion were completed and the test results indicated sound and pressure tight shell weld joints. Although the shell serves as the inner form for the retainer wall concrete, the concrete does not bond to the shell due to the fact that the shell below elevation 40 ft is coated with 30 mils minimum of Koppers Bitumastic 50 coal tar mastic. To permit thermal expansion of the shell relative to the retainer wall, a 10-ft-high layer of fiberboard which tapers from 2 inches at the top to 1 inch at the bottom is placed between the shell and the wall.

The rain runoff water from the dome is collected in the 18-in.-wide gutter formed in the retainer wall top. Drains from the low points in the gutter are connected into the site drainage system. Rain water is prevented from entering the space between the shell and the inside of the retainer wall by a flexible neoprene-coated fabric flashing-diaphragm which is bolted to the shell and the inner trough wall as shown on Fig. 904-1. Any water that does enter this space through the wall construction joints is drained through 1-1/2-in.-dia. weep holes located every 10 ft around the periphery and which discharge to the crushed rock embedded 8-in.-dia. perforated circular drain pipe which surrounds the foundation mat.

To minimize the possibility of water entering the inside of the building through the construction joint between the base of the retainer wall and the top of the foundation mat, a 3-in. perforated styrene-rubber alloy plastic pipe is embedded in the construction joint on the building side. This drain ring is connected to sump No. 3 by a 2-in.

Schedule 80 pipe embedded in the foundation mat. A 2-in. valve inside sump No. 3 is provided to drain any inleakage and thus prevent buildup of water pressure during heavy torrential rains on the underside of the elastic compound filled slot adjacent to the shell as shown in Fig. 904-1. Test drain valves, 1 in. size, located 2 ft above the basement floor at azimuth positions 191°, 247° and 349° are provided for periodic checking to ensure that water does not accumulate in the space between the shell and ring wall.

Cast integral with the retainer wall are the following reinforced concrete manholes:

Manhole Identification	Azimuth Location, degrees
Fire protection	40
Electrical No. 1	65
Air inlet	79
Electrical No. 2	158
Air exhaust	292
Electrical No. 3	307

The manholes, shown in section on Fig. 904-2 are the entry points for the power, control, and instrumentation cables and the piping between the inside of the containment building and the outside site services. Figure 904-2 also illustrates the method the building shell pipe penetrations pass through the retainer wall.

A 12-in.-thick sloped wing wall (slope 1 in 2) which extends up to elevation 40 ft, 0 in. and out 36 ft, 6 in. from the edge of the foundation mat is located on each side of the freight door truck entry access. Four-in.-dia. weep holes on 10-in. centers, directly above the roadway, drain any water accumulation in the backfill adjacent to the wall.

The granular backfill around the retainer wall, manholes and wingwalls is designed to assist in resisting the uplift forces on the building when it is internally pressurized. The sand backfill is placed adjacent to the retainer wall within the envelope 6 ft radially outward from the toe of the retainer wall, shown in Fig. 904-1. Nine ft above the foundation mat top surface the backfill is sloped on a 1/1 pitch up to finish grade level. Adjacent to the manholes and wingwalls the thickness of the sand fill layer is a minimum of 2 ft up to the level where the fill is sloped.

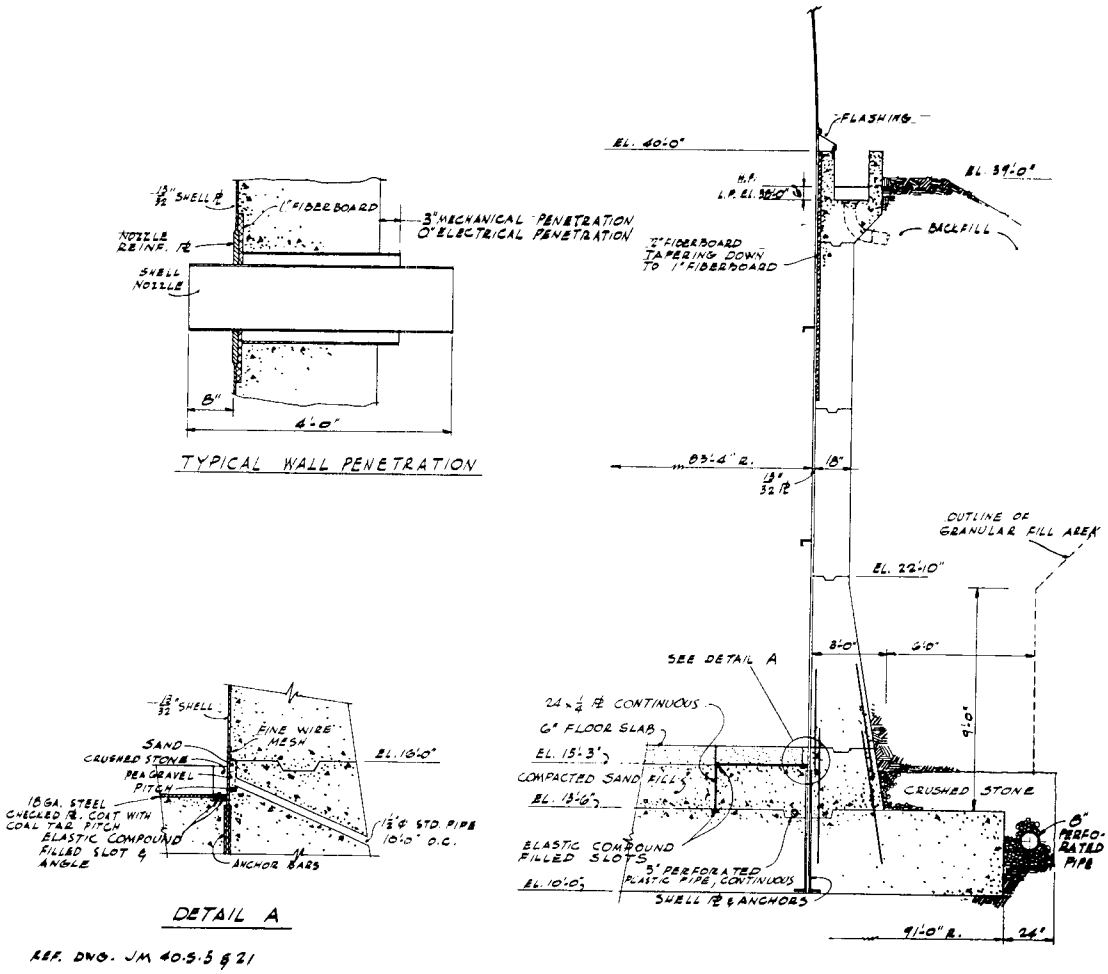

Fig. 904-1 Details of retainer wall and foundation mat.

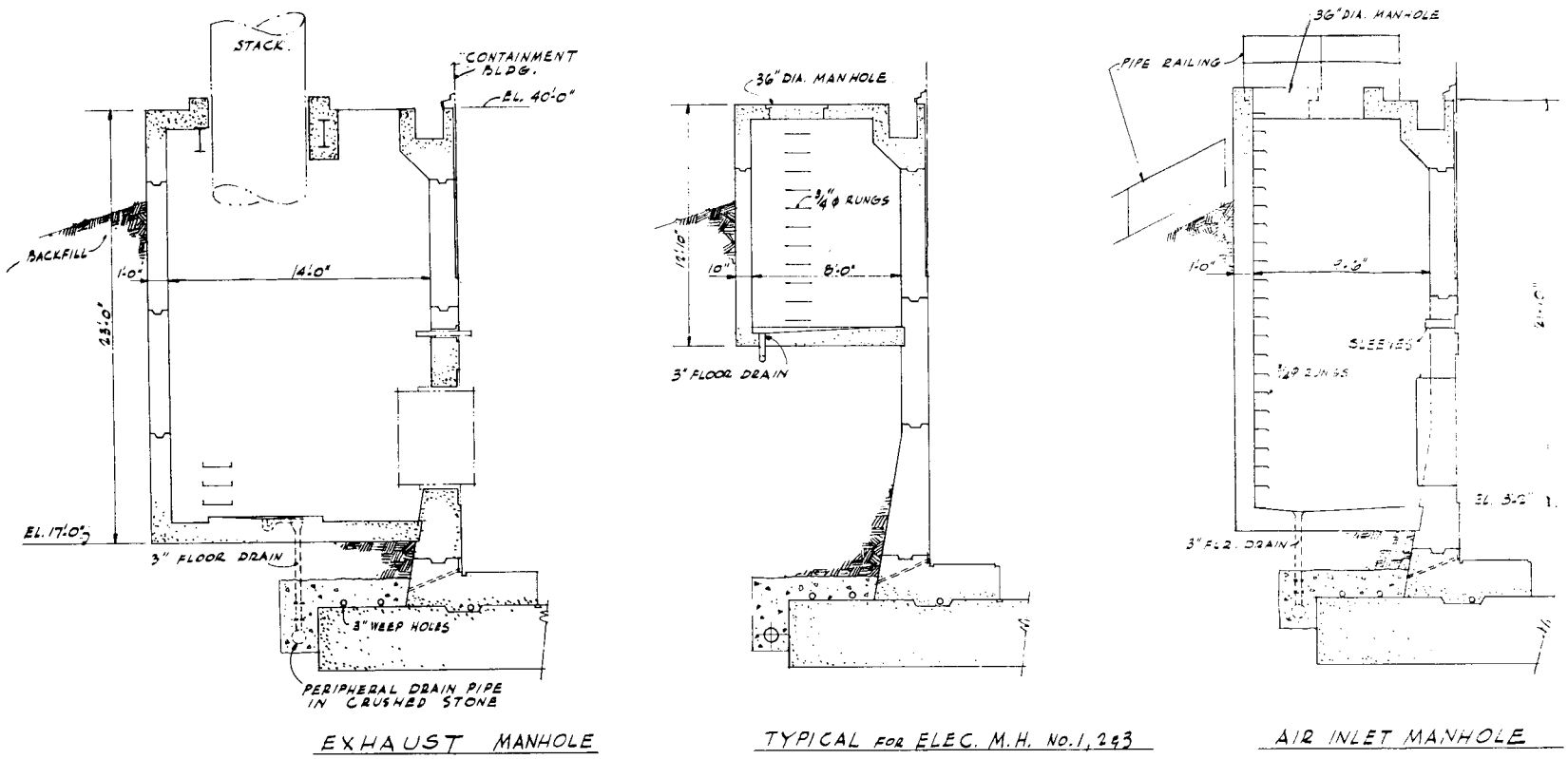

REF. DWG. JM 40-S-6 & 7

Fig. 904-2 Retainer wall manhole details.

905. BUILDING SEALS AND PENETRATIONS

A. Foundation Mat Seal

The pressure-tight sealing of the concrete base of the containment building over the lifetime of the plant posed one of the major design problems with this type structure; the results of an R&D program which was concerned with this problem have been published in GNEC 168, "Containment Membrane Development for the BONUS Reactor Building, Terminal Report." Although laboratory tests have shown essentially zero leakage through samples made from the same type concrete mixture and thickness as the BONUS foundation slab, reliance on the impermeability of test samples would be unsafe since small cracks could develop in the foundation mat during the 25-year design lifetime.

The building composite base slab, consists of the previously described main foundation slab, a gas-tight seal membrane applied on the upper surface of the foundation mat, an 18-in.-thick sand-filled area for conduits and drain lines which in an emergency can be saturated with water for sealing the slab, and a 6-in. concrete base slab which serves as the working floor at the basement level of the plant. Figure 904-1 illustrates this base slab construction.

The potential leakage paths through the concrete foundation mat which were sealed off are: 1) the large exposed concrete surfaces of the slab monoliths, 2) the construction joints between monoliths, 3) the junction of the slab with the building shell, 4) areas under-load-bearing shield walls, truck loading ramp, and equipment and column piers, and 5) pipe and electrical grounding rod penetrations through the slab.

The 1-1/2-in.-wide x 2-1/2-in.-deep construction joint slots between adjacent monoliths at elevations 12 ft, 6 in., 15 ft, 3 in., and 15 ft, 6 in., are made pressure tight in the following manner. After sandblast cleaning and vacuuming, the slots are filled with 1 in. to 1-1/4 in. of hot (375°F - 385°F) elastic joint compound (Philip Carey Manufacturing Co., "Jet Careylastic"). On top of this a 1/8 to 1/4-in.-layer of hot (300°F ± 25°F) waterproofing pitch (Koppers "Waterproofing Pitch") is applied. All uncoated construction joint slot walls and a base slab area extending a minimum of 2 ft outward from the center of the construction joints are then given a prime coat of Koppers Bituplastic Primer and three coats of Koppers Bituplastic 33 Coating. After the Bituplastic 33 coating is dried the construction joint slot is filled with waterproofing pitch to a level flush with the top of the base mat prior to covering with the membrane seal lining.

The major floor areas of the foundation mat are made gas-tight by a seal membrane which covers the mat and the elastic compound, filled construction joint slots and extends to the load-bearing shield walls,

equipment piers, and embedded steel liners. The main membrane consists of two layers of 8-lb glass-reinforced asbestos felt (coal tar saturated) with alternate layers of waterproofing pitch (Koppers "Waterproofing Pitch") applied over the oil primed (Koppers "Concrete Priming Oil") foundation mat surface and the felt layers. Pitch is used because of its self-healing properties and its compatibility with water and all other sealing materials used.

The application sequence for the membrane seal to the foundation mat is the following.

1) After cleaning concrete surface apply prime coat of Koppers Concrete Priming Oil at rate of 1 gallon per 100 sq ft.
2) Apply first layer of waterproofing pitch at a minimum rate of 125 lbs per 100 sq ft of slab area to produce a 1/8 - 3/16-in.-thick smooth continuous and level surface.
3) After the first layer of pitch has cooled it is covered with a ply of 8 lb felt with adjacent sections lapped 2 inches and the edge of the felt within 1 - 3 inches from vertical surfaces.
4) The first felt layer is covered with a 3/16-in.-thick layer of waterproofing pitch.
5) Apply second felt layer over pitch and fit felt edges close to vertical surfaces.
6) Apply third waterproof pitch layer 3/16-in.-thick over the second felt layer.
7) Cover with sand.

The top surface of the concrete annular ring adjacent to the building shell, formed by the 159-ft-OD, 2-ft-high, 1/4-in.-thick steel liner plate, is made leak-tight by filling the slots in the concrete adjacent to the liner and shell with elastic joint compound (Jet Carey-lastic) and waterproofing pitch, and coating the top surface with bituminous paint (Koppers Bituplastic No. 33, coal tar polymer emulsion) and waterproofing pitch. The pitch is topped with ungalvanized 18-gage, 4-way safety plate, a single felt layer, a 1-in. sand layer, a layer of 6 mil polyethylene film and the 6-in. concrete floor slab. Adjacent to the shell, an annular pocket 3-1/2 in. wide by 8 in. deep, filled with crushed stone, is provided to permit saturating the top of the annulus with water to form a backup seal if it is required during the plant lifetime.

The foundation mat surface, directly below load-bearing shield walls and feedwater pump foundations is coated with water glass (Demicon Cure-Hard, clear and tempcolor). Although water glass is not considered to be a good sealing membrane, it was used under load bearing foundations which would normally not require any sealing as an extra safety precaution. Bituminous primer (Koppers Bituplastic Primer) and paint (Koppers Bituplastic No. 33) are used under other equipment piers, except for the turbine generator pedestal, which is bonded directly to the foundation mat. All concrete walls extending down to the foundation mat are coated on both sides with bituminous-type paint from elevation

13 ft, 6 in. to elevation 16 ft, 0 in. to increase the leakage path length and thus minimize the leakage through these paths. Leakage through the load-bearing column piers is reduced by 1/4-in.-thick steel liners extending from the mat to the basement floor level. The upper sections of these liners are filled with waterproofing pitch to a point above the column anchor bolts, and the pitch is topped with coarse sand. The concrete joints between the base mat and steel liners, embedded pipes, or embedded ground bars are all sealed in a similar manner; the vertical slot in the concrete adjacent to the metal member is filled with elastic joint compound and waterproofing pitch. Wherever the filled slot seals are used the concrete floor on either side of the slot is coated with a bituminous paint seal for a distance of at least 1-1/2 ft to minimize diffusion through the concrete adjacent to construction joints which are sealed to a depth of 1-1/2 inches.

All sealing compounds used in the mat construction have been laboratory-tested under pressure and vacuum conditions to determine their sealing effectiveness and the results are reported in GNEC 168, "Containment Membrane Development for the BONUS Reactor Building, Terminal Report."

The verification of the structural design and leaktightness of the BONUS building has been demonstrated by a pressure-proof test at 6.25 psig, a vacuum test at 1/4 psig, and a 3-day leak rate test with 5-psig internal pressure, all conducted after the building was erected but prior to the installation of internal structures and equipment. Two leak rate tests were conducted: in the first test without the membrane seal applied to the concrete foundation, but with seal compound in the monolith construction joints and steel liner slots and the surface of the annular ring partially sealed with bituminous-type paint, the average 24-hr leak rate measured was 0.64 per cent. In the second test the foundation mat surface inside of the annular ring steel liner was flooded with 2 inches of water, and the measured leak rate for this condition was 0.09 per cent; a factor of two less than that required. A final leak rate test will be conducted after the plant construction is complete and prior to operating the plant to determine the total leakage through all possible component leak paths.

After the plant is in operation, the entire containment building will be leak tested every 5 years at 25 per cent of the 5-psig design pressure or in accordance with the requirements of the adopted ASA N-6 Code, Section 19. Large access openings such as the air locks and ventilation system butterfly valves (described in Section 907) will be tested separately once a year. Inspections will be made yearly for signs of foundation settlement, corrosion, deterioration of gaskets, mechanical impact damage, new work, etc., and visual spot checks will be made of areas where stresses are concentrated to detect any cracking of welds in base metal.

Official records of all inspections and tests will be kept as required by ASA N-6 Code.

B. Electrical and Mechanical Shell Penetrations

The method of sealing the electrical and mechanical lines which penetrate the containment building steel shell varies with the type, size, and function of the line. Table 905-1 lists the sizes, locations and functions of the various shell and mat penetrations for mechanical services and Table 905-2 for electrical penetrations. Figure 905-1 shows the physical location of the electrical penetrations in the containment building shell.

The three 925-ampere conductors of the 13.8-kv line between the generator and the main power transformer pass through the shell through 15-kv gas-tight, fixed-stud insulator bushings which are mounted on non-magnetic plates seal-welded to the shell. This type penetration, shown on Fig. 905-2, is also used for the 440-volt, 3-phase, 4000-ampere lines entering the building from the station service transformer. Multiconductor power cables that are standard type, i.e., not gas-tight, enter the building as shown on Fig. 905-2 through insulated, pressure-tight pin and socket-type connectors installed on both ends of pipe sleeves which are welded to the cover plate of the building penetration opening. All other cables are multi-conductor, gas-tight type. They are sealed at each end of the conduit sleeve through which they pass with Thomas and Betts Co. water-tight seal connectors.

The pipes that penetrate the building shell through the sleeves welded to the shell are sealed by flanged-rubber expansion joints between the sleeve and the pipe. In a few cases the building penetration sleeve itself is the pipe containing the fluid as is the case for the building ventilation air intake and discharge lines and the emergency condenser discharge at the dome top. Double valves are installed in systems of this type which discharge directly to the surroundings.

For piping which penetrates the building and connects internal systems with systems outside the building, either quick-closing single valves are installed inside the building, or check valves backed up by manual valves operable from outside the building are provided to isolate the building in case of a serious accident. Figure 907-1 shows the schematic electric circuitry for those isolation valves which automatically close when the building isolation circuit actuator is operated on high radiation level trip.

Although the sea water inlet and discharge lines for the main condenser penetrate the floor of the building, these lines and the tube side of the main condenser form a closed loop which is not exposed to the building atmosphere at any point and, therefore, will not provide a leakage path in case of a reactor accident. Since this sea water circuit is considered to be "outside" of the contained building atmosphere, and since it is highly desirable to keep the main condenser available as a heat sink in emergencies, automatic quick closing valves are not used in these lines. However, manual switches are provided in the main control room and in the pillbox for closing these valves.

Table 905-1 CONTAINMENT BUILDING PENETRATIONS FOR MECHANICAL SERVICES

Penetration identification	Penetrations Quantity	Size	Location and Elevation	Azimuth	Penetration schedule number	Pipe or cable passing through No.	Description	Type of closure	Expansion joint	Reference Dwg.
1. Fresh air intake	1	5' 0" ID	22' 6"	79°	5/16 Pl.		Direct contact	Double, spring loaded butterfly valves		
2. Building exhaust air	1	5' 0" ID	22' 6"	292°	5/16 Pl.		Direct contact	"		
3. Emergency condenser vent	1	8"	95' 0" ±	270°	40		Direct contact	"	X-9	40-M-82
4. Instrument control spare	1	2	32' 0"	313°	80		--	Capped		CB&I 8-2030-18
5. Instrument control spare	1	2	31' 2-1/2"	313°	80		--	Capped		CB&I 8-2030-18
6. Instrument control spare	1	2	32' 0"	322°	80		--	Capped		CB&I 8-2030-18
7. Instrument control spare	1	2	32' 0"	319°	80		--	Capped		CB&I 8-2030-18
8. Building interior spray	1	14	26' 0"	172°	30	1	12" Bldg. spray line	MOV-6	X-2	40-M-76
9. Cooling water from tower basin	1	12	28' 0"	322°	30	1	10" CW supply	Spring loaded. Air op. diaphragm valve CWP-77A	EJ-5	23X-325w
10. Cooling water to tower	1	12	28' 0"	319°	30	1	10" CW return	"	EJ-5	23X-325w
11. Caustic for LX regeneration	1	3	28' 0"	22°	80	1	3/4" conc. caustic	Spring loaded. Air op. diaphragm valve FCV-13	X-6	40-M-128
12. Acid for IX regeneration	1	3	28' 0"	23°	80	1	3/4" conc.acid	Spring loaded. Air op. diaphragm valve FCV-14	X-6	40-M-128
13. Sanitary drain	1	10	28' 0"	257°	30	1	4" CI sanitary waste	Spring loaded. Air op. ball plug valve FCV-18	X-1	40-M-72
14. Spare	1	6	28' 0"	27°	40		--	Capped		CB&I 8-2030-23
15. Spare	1	6	28' 0"	230°	40		--	Capped		CB&I 8-2030-23
16. Spare	1	6	28' 0"	317°	40		--	Capped		CB&I 8-2030-18
17. Instrument control spare	1	2"	32' 0"	168°	80		--	Capped		CB&I 8-2030-25
18. Instrument control spare	1	2	31' 2-1/2"	168°	80		--	Capped		CB&I 8-2030-25
19. Service air	1	4"	28' 0"	325°	40	1	2" air to circ. water intakes	Spring loaded. Air op. diaphragm valve V-SAP-1	EJ-2	23X-335w & 23X-335.01w
20. Spare	1	4"	28' 0"	327°	40		--	Capped	NR[1]	CB&I 8-2030-18
21. Vacuum relief valve	1	10"	53' 0"	286° 30'	80		Direct Contact	Dead weight type vac. relief valve	NR	CB&I 64 Rev. 1
22. Vacuum relief valve	1	10"	53' 0"	52° 30'	80		Direct Contact	Dead weight type vac. relief valve	NR	CB&I 64 Rev. 1
23. Zeolite-treated water	1	4	28' 0"	40°	40	1	2" softened water	Spring loaded. Air op. diaphragm valve FCV-15	X-5	40-M-126
24. Air	1	2"	28' 0"	79°	80	2	(1) 1/2" copper tubing (1) 1/4" copper tubing per valve actuator	Control air tubing forms closed loop to bldg. air intake valve actuator-no valves	NR	40-C-8
25. Air	1	2"	28' 0"	242°	80	2	(1) 1/2" copper tubing (1) 1/4" copper tubing for valve actuator	Control air tubing forms closed loop to bldg. exhaust valve actuator-no valves	NR	40-C-8
26. Deleted										
27. Core spray	1	6	28' 0"	170°	40	1	3" core spray line	Check Valve + MOV-4	X-4	40-M-86
28. Service water	1	3	28' 0"	193°	80	1	2-1/2" serv. water	Spring loaded. Air op. diaphragm valve FCV-19	X-8	40-M-71
29. Spare	1	8	28' 0"	259°	40		--	Capped	NR	CB&I 8-2030-48
30. Air spare	1	2	95' 0" ±	270°	80		--	Capped	NR	CB&I 8-2030-27
31. Fire protection	1	12	28' 0"	41°	30	1	10" fire spray	Alarm check valve + outside post indicator valve	X-3	40-M-59
32. Manual building press relief	1	6	28' 0"	296°	40		Direct Contact	Two manually operated 4" gate valves in stack manhole	NR	40-M-116
33. Ground water inspection	1	1	18' 0"	106°	80		Direct contact	Plugged manual globe valve	NR	40-M-100
34. Ground water inspection	1	1	18' 0"	247°	80		Direct contact	"	NR	40-M-100
35. Ground water inspection	1	1	18' 0"	349°	80		Direct contact	"	NR	40-M-100
36. City water	1	2	26' 0"	191°	80	1	1" potable water	Spring loaded solenoid valve SV-43	X-7	40-M-71
37. Building pressure gages	1	2"	43' 4"	118°	80			Meter valves in the lines		40-C-10
Base Mat Liquid waste outlet	1	4" ID	14' 0"	308° 18'	0.52" wall CI	1	3" CI saran lined contam. waste effluent	Spring loaded. Air op. diaphragm valve FCV-16	NR	40-M-79
Base Mat Condenser waterbox drain	1	4" ID	14' 0"	13° 12'	0.52" wall CI		Direct contact	"	NR	40-S-4
Base Mat Condenser circ. water inlets	1	24" ID	14' 0"	8° 19'	1.16" wall CI		Direct contact	d-c opr. butterfly valve manually controlled from pillbox or main control panel	NR	40-S-4
Base Mat Condenser circ. water inlets	1	24" ID	14' 0"	15° 36	1.16" wall CI		Direct contact	"	NR	40-S-4
Base Mat Condenser circ. water outlets	1	24" ID	14' 0"	359° 7'	1.16" wall CI		Direct contact	"	NR	40-S-4
Base Mat Condenser circ. water outlets	1	24" ID	14' 0"	23° 48'	1.16" wall CI		Direct contact	"	NR	40-S-4
Base Mat Retaining wall annulus drain	1	3"	12' 10"	Sump No. 3	80		Direct contact	Manually operated gate valve with blind flange	NR	40-S-2

1 Not Required

Table 905-2 CONTAINMENT BUILDING PENETRATIONS FOR ELECTRICAL AND CONTROL SERVICES

Penetration identification	Penetrations Quantity	Size	Location and Elevation	Azimuth	Penetration schedule number	Pipe or cable passing through No.	Description	Type of closure	Reference Dwg.
A. Electrical spare, elec. manhole No. 1	1	18" ID	31' 9"	66° 17'				Capped	
B. Power cables, elec. manhole No. 1	1	18" ID	31' 9"	64°		3 sleeves[c]	cable 8	Pyle connectors[b]	23X-405W
							cable 34	"	23X-405W
							cable 52	"	23X-405W
C. Control + commun. cables, elec. manhole No. 1	1	20" ID	27' 9"	66° 17'		19 sleeves[c]	spare 2"	TC[d]	
							spare 1-1/2"	"	
							spare 1-1/2"	"	
							spare 2"	"	
							spare 2"	"	
							cable 513	Pyle connectors[b]	40-E-80
						outer circle	cable 1109	T & B[a]	40-E-83
							cable 910	"	40-E-82
							spare 2"	TC	
							spare 2"	"	
							spare 2"	"	
							spare 2"	"	
							spare 1-1/2"	"	
							spare 1-1/4"	"	
						inner circle	spare 1-1/4"	"	
							spare 1-1/4"	"	
							spare 1-1/4"	"	
							spare 1-1/2"	"	
						center location	spare 1-1/4"	"	
D. Control and communications cables, elec. manhole No. 1	1	20" ID	27' 9"	64°		19 sleeves[c]	spare 2"	TC	
							spare 1-1/2"	"	
							spare 1-1/2"	"	
							cable 33	T & B	23X-405W
							cable 24	"	23X-405W
							cable 2	"	23X-405W
						outer circle	cable 59	"	23X-405W
							cable 58	"	23X-405W
							cable 25	"	23X-405W
							cable 50	"	23X-405W
							spare 1-1/4"	TC	
							spare 2"	"	
							cable 47	T & B	23X-405W
							cable 64	"	23X-405W
							cable 16	"	23X-405W
						inner circle	cable 15	"	23X-405W
							cable 35	"	23X-405W
							cable 38	"	23X-405W
						center location	cable 20	"	23X-405W
E. Control cables, elec. manhole No. 2	1	20" ID	31' 9"	159° 17'		19 sleeves[c]	cable 604	T & B	40-E-81
							cable 997	Pyle connectors	40-E-82
							cable 1099	"	40-E-83
							cable 995	"	40-E-82
							cable 66	T & B	23X-405W
							cable 65	"	23X-405W
						outer circle	cable 580	Pyle connectors	40-E-80
							cable 909	T & B	40-E-82
							cable 1114	"	40-E-84
							cable 595	"	40-E-80
							cable 1111	Pyle connectors	40-E-83
							cable 587	T & B	40-E-80
							spare 2"	TC	
							cable 585	T & B	40-E-80
							cable 597	"	40-E-80
							cable 608	"	40-E-81
						inner circle	cable 589	"	40-E-80
							cable 639	"	40-E-81
						center location	cable 996	Pyle connectors	40-E-82

(a) Thomas & Betts
(b) Pyle National Connector
(c) See 23 x 417W for layout
(d) Threaded conduit cap
(e) Sleeves are listed clockwise from the top when penetration is viewed from inside the manhole.

Table 905-2 (Continued)

Penetration identification	Penetrations Quantity	Size	Location and Elevation	Azimuth	Penetration schedule number	Pipe or cable passing through No.	Description	Type of closure	Reference Dwg.
F. Control cables + air lines elec. manhole No. 2	1	20" ID	31' 9"	157°		15 air lines + 16 sleeves(c)			
						outer circle(e)	spare 2"	TC(d)	
							spare 2"	"	
							cable 1112	T & B(a)	40-E-83
							cable 1194	Pyle connectors(b)	40-E-83
							cable 1193	"	40-E-83
							cable 1192	"	40-E-83
							cable 1191	"	40-E-83
							spare 2"	TC	
							spare 2"	TC	
						inner circle(e)	spare 1-1/2"	"	
							spare 1-1/2"	"	
							spare 1-1/4"	"	
							spare 1-1/2"	"	
							spare 1-1/2"	"	
							spare 1-1/4"	"	
						center location	spare 1-1/4"	"	
G. Control cables, elec. manhole No. 3	1	20" ID	31' 9"	308° 17'		19 sleeves	spare 1-1/2"	TC	
							spare 1-1/4"	"	
						outer circle	cable 182	T & B	23X-405.01W
							cable 180	"	23X-405.01W
							cable 261	"	40-E-79
							cable 1029	"	40-E-83
							cable 184	"	23X-405.01W
							cable 179	"	23X-405.01W
							cable 178	"	23X-405.01W
							spare 1-1/4"	TC	
							spare 1-1/2"	"	
						inner circle	cable 191	T & B	23X-405.01W
							cable 175	"	23X-405.01W
							cable 181	"	23X-405.01W
							cable 183	"	23X-405.01W
							cable 177	"	23X-405.01W
							cable 176	"	23X-405.01W
						center location	cable 188	"	23X-405.01W
H. Control cables spare, elec. manhole No. 3	1	20" ID	31' 9"	306°				Capped	
J. Inlet air manhole cable	1					1	cable 510(1")	T & B	40-E-80
N. Station service power	1	24"hx3'1"w	43' 4"	65°		3	1.2 KV insul. bushing lapp 49218 (18" shank) or equivalent		23X-409W
P. Main generator leads	1	12"h x 3'0"w	32'	56°		3	15 KV fixed stud, insul. bushing lapp No. 49686L or equivalent		23X-407.01W

(a) Thomas & Betts
(b) Pyle National Connector
(c) See 23 x 417W for layout
(d) Threaded conduit cap
(e) Sleeves are listed clockwise from the top when penetration is viewed from inside the manhole.

From the pillbox the four valves are closed as a group by a single momentary-contact switch. This switch is interlocked with the building isolation bus so that the pillbox switch becomes effective only after other building isolation valves have been actuated. Power for closing the sea water valves is obtained from the station batteries.

Two vacuum relief valves admit air to the building in case the pressure inside drops below atmospheric pressure as a result of changes in barometric pressure or cooling of the building atmosphere by one of the spray systems while the building is closed. Both valves are set to open at 5 inches of water negative pressure. At the building design vacuum of 1/4 psig each valve will develop a minimum of 4000 cfm relief capacity. Either valve can thus accommodate the maximum expected barometric pressure change of 4 in. Hg per hour. Dual valves are installed for back-up protection in case one valve should fail to operate. The rate of cooldown caused by spraying the interior of the building will be controlled by controlling the spray rate when the building is near atmospheric pressure to insure that the rate of pressure decrease does not exceed the net relieving capacity of the two vacuum relief valves. Opening of each relief valve is indicated in the main control room on the annunciator on Panel E (Fig. 903B-6). The vacuum relief valves are gravity actuated units manufactured by Shand & Jurs. Each valve has a flat rubber lined pallet which is held against the horizontal valve seat by a lead weight. The pallet is equipped with a guide rod which insures proper positioning of the pallet with respect to the valve seat at all times. The effective inside throat diameter of each valve is 13-7/8 in. Both valves were tested during the leak testing of the building and were found to be air-tight with pressure inside the building. Figure 905-3 shows one of the two relief valves as installed in the building shell.

The outer ends of the penetration sleeves on which the relief valves are mounted are turned downward and are covered with metal screen to prevent blockage of the valve intake openings by bird's nests or other trash.

C. Air Locks and Freight Door

Personnel entry and exit from the containment building is normally through the entrance air lock leading into the administration building at the turbine floor level. Physical details of the entrance air lock are shown on Fig. 905-4 and 905-5, and the schematic control wiring on 905-6. An air lock of the same size, located on the opposite side of the building at same level and leading to the outside, is to be used during plant operation for the delivery of plant supplies which are small enough for fork-lift-truck handling within the air lock and also for emergency escape of the operating staff from the building in case the other air lock is damaged or inoperative. The end views and sectional elevation of the service air lock are shown on Fig. 905-7 and Fig. 905-8 and the electrical control wiring on Fig. 905-6. Each air lock is 11 ft in diameter with an inside length of 12 ft and can

accommodate 25 people in an emergency. The air lock access doors provide a clear opening 5 ft wide by 8 ft high.

The inner and outer gasketed (soft rubber) doors and pressure-equalizing valves of each air lock are mechanically interlocked such that only one door and its associated valve can be opened at a time. Both inner and outer doors swing outward away from the air lock. Emergency lights and a telephone are installed in each air lock to permit use of the air locks during a power failure and to allow contact with the control room and administration building in case difficulty is experienced in operating the air lock doors. Glass ports in the air lock doors permit visual inspection of the plant prior to entry and also allow visual communication between the air lock and the outside in the event trouble develops within the air lock. The two air locks are identical in all details except in the method of forcing the door against and away from the gasket seal; in the entrance air lock, door sealing and unsealing can be accomplished by either manual or motor-operated controls, whereas in the emergency air lock these same operations are done strictly by manual means. In both air locks the door swing, in the closing and opening directions, is by hand operation of the control wheel. An auxiliary hand wheel is provided on the inner door of both air locks to permit a man inside the building to close the outer air lock if it is left open. Limit switches mounted on each air lock door jamb indicate in the control room the opening of the doors in each air lock; if two doors within an air lock are open at the same time (e.g., mechanical interlock fails), the limit switches provide the electrical signal for scramming the reactor.

Deliveries of heavy supplies into the plant that cannot pass through the emergency air lock, or heavy shipments out of the plant such as the spent fuel cask, are to be made when the plant is shut down and the building freight door opened. The bolted and gasketed freight door, shown on Fig. 905-9, is supported by an overhead trolley, and can be rolled away from the 12-ft-wide x 14-ft-high opening. The door is furnished with a limit switch to give remote indication in the control room when the door is open. Prior to truck entry into the building, a sectional ramp piece must be inserted in the floor adjacent to the door frame sill, in order for the truck to drive down the unloading ramp to the basement floor level.

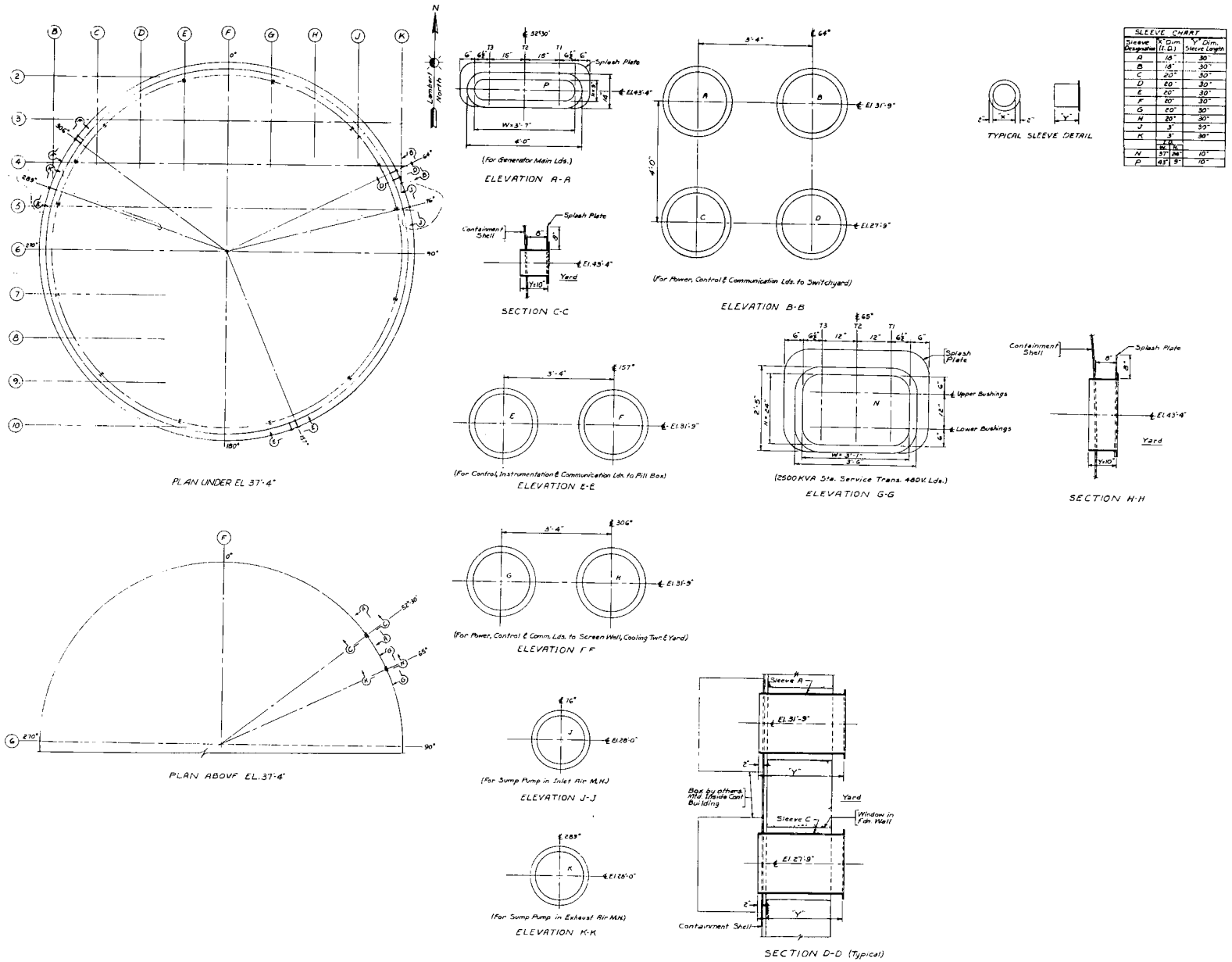

SLEEVE CHART		
Sleeve Designation	"X" Dim. (I.D.)	"Y" Dim. Sleeve Length
A	18"	30"
B	18"	30"
C	20"	30"
D	20"	30"
E	20"	30"
F	20"	30"
G	20"	30"
H	20"	30"
J	3"	30"
K	3"	30"
	I.D. W.	I.D. H.
N	37"	24"	10"
P	43"	9"	10"

Ref. Dwg. J&M 40-E-38 Rev. 1

Fig. 905-1 Building electrical penetrations.

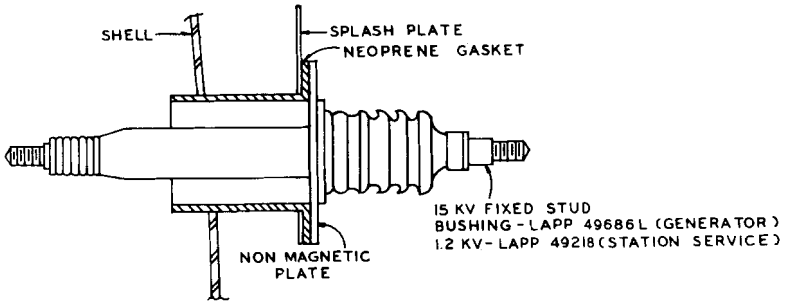

TYPICAL GENERATOR PHASE LEAD ENTRY
STATION SERVICE SIMILAR

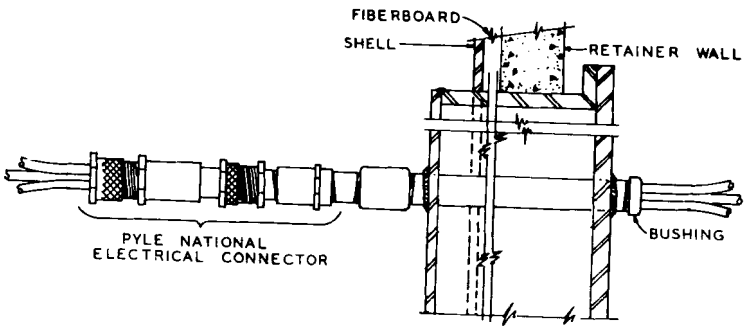

TYPICAL SEALS FOR POWER CABLES

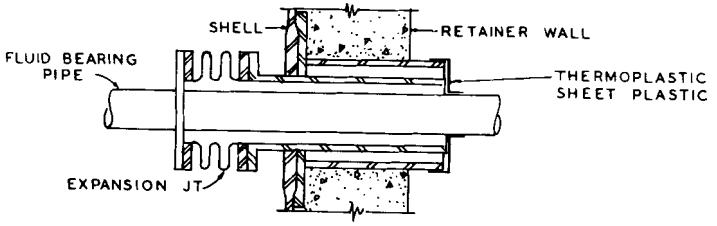

TYPICAL PIPE PENETRATION

REF. DWGS. PRWRA 23-X 407 W
23-X 407.01 W
23-X 409 W

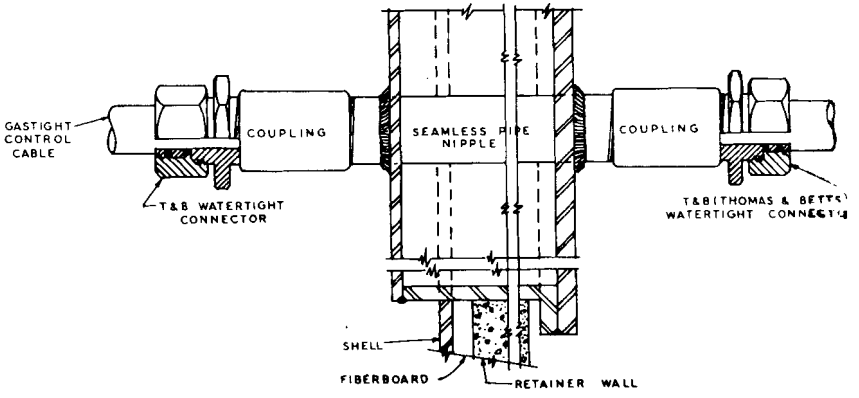

Fig. 905-2 Mechanical and electrical building seal details.

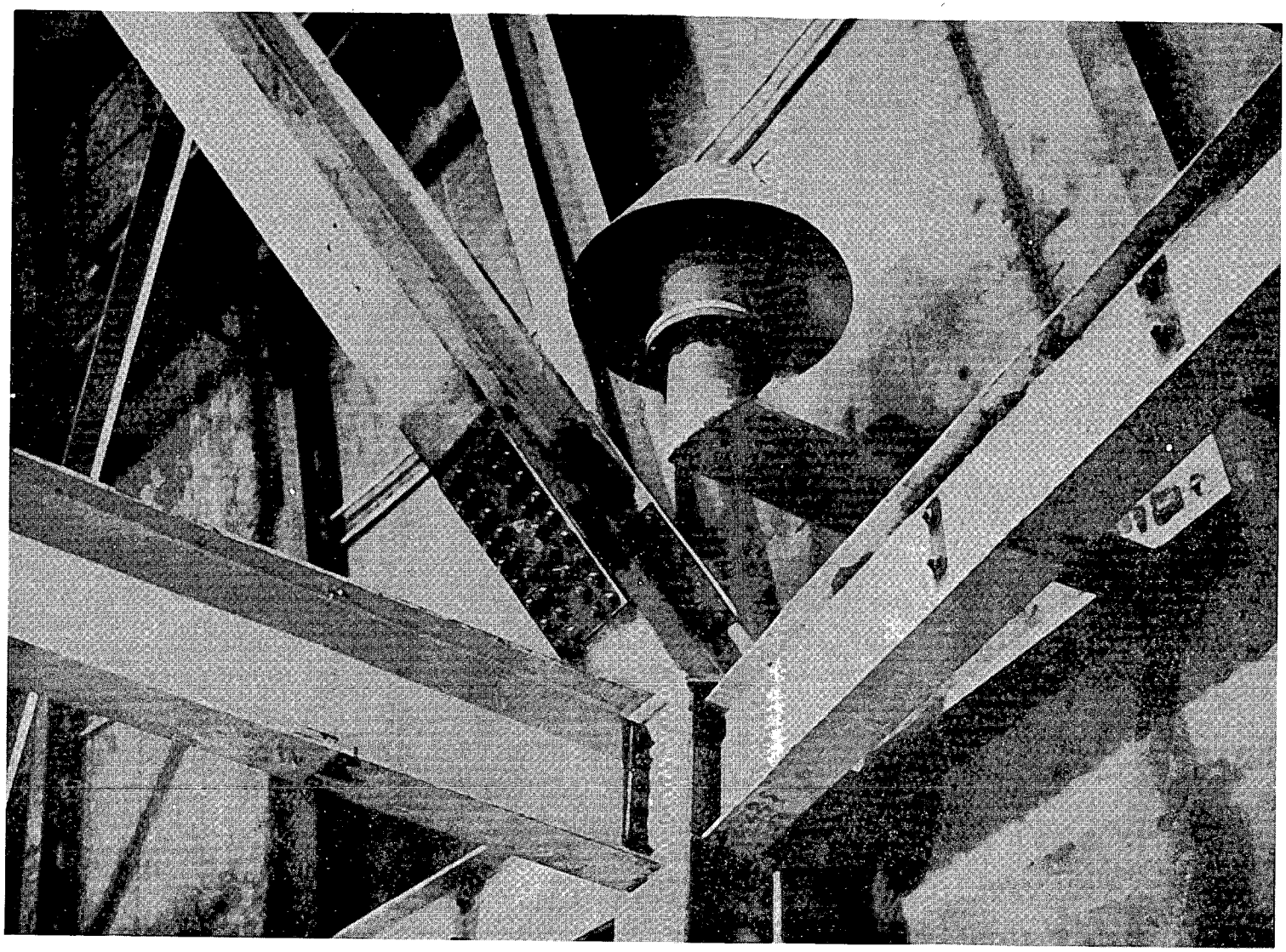

Fig. 905-3 Vacuum relief valve installation.

GENERAL NOTES

EITHER DOOR CAN BE MANUALLY OR ELECTRICALLY OPERATED FROM EITHER SIDE OF THE DOOR. DOORS & VALVES ARE MECHANICALLY OR MECHANICALLY ELECTRICALLY INTERLOCKED SO THAT BOTH DOORS OR VALVES CANNOT BE OPEN AT THE SAME TIME. ONE DOOR OR VALVE CANNOT BE OPENED UNLESS THE OPPOSITE DOOR OR VALVE IS SEALED. OPERATION OF THE HANDWHEEL WILL OPERATE THE MECHANICAL INTERLOCK TO PREVENT OPENING OPPOSITE DOOR & VALVE. OPEN PRESSURE EQUALIZING VALVE UNLOCK DOOR & MECHANICALLY UNSEAT DOOR FROM GASKET. OWING DOOR OPEN ON ITS HINGES THESE OPERATIONS ARE IN THE SEQUENCE AS DESCRIBED. THE ABOVE OPERATIONS ARE PERFORMED IN THE SAME SEQUENCE WHEN THE DOOR IS ELECTRICALLY POWERED HOWEVER THE DOOR MUST BE SWUNG OPEN MANUALLY OR WITH THE HANDWHEEL.
AN ADDITIONAL HANDWHEEL ON THE CONTAINMENT VESSEL SIDE OF THE INTERIOR DOOR WILL PERFORM THE FUNCTIONS AS LISTED ABOVE FOR THE EXTERIOR DOOR. OPERATION FAILURE OR MALFUNCTION OF THE ELECTRICAL POWER WILL NOT INTERFERE WITH THE MANUAL OPERATION OF THE DOORS.

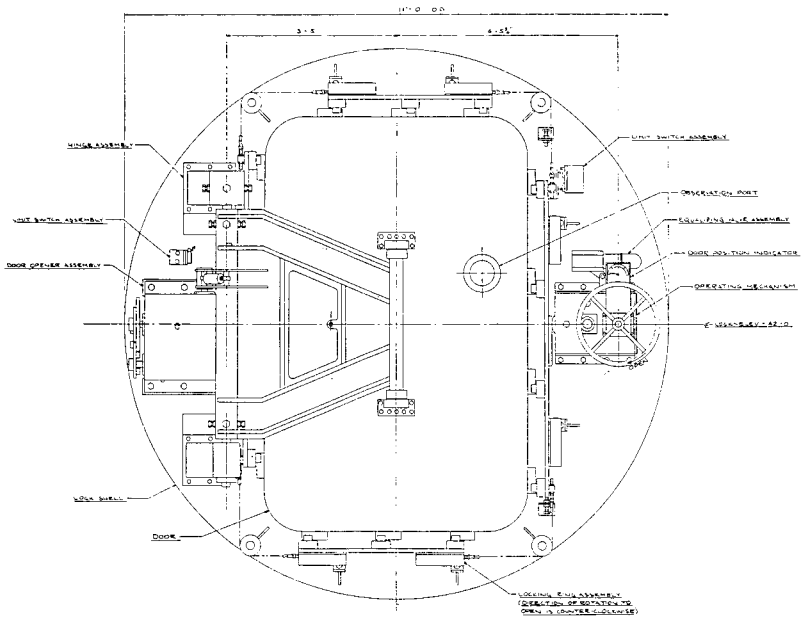

EXTERIOR END OF LOCK

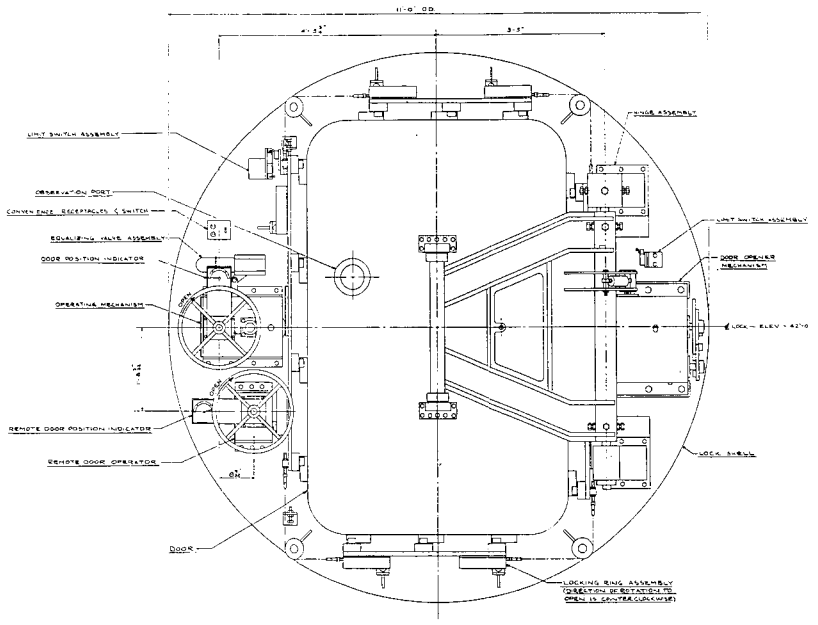

INTERIOR END OF LOCK

Ref. Dwg. CB&I No. 41 and 42 (8-2030)

OPERATION OF LOCK DOOR

HANDWHEEL ROTATION	OPERATION	TIME WHEN ELEC POWERED
0 - 1½ TURNS	VALVE OPENED	4 SECONDS
1½ - 4 TURNS	DOOR UNLATCHED	13 SECONDS
4 - 5½ TURNS	DOOR OPENED	———

Fig. 905-4 Entrance air lock details.

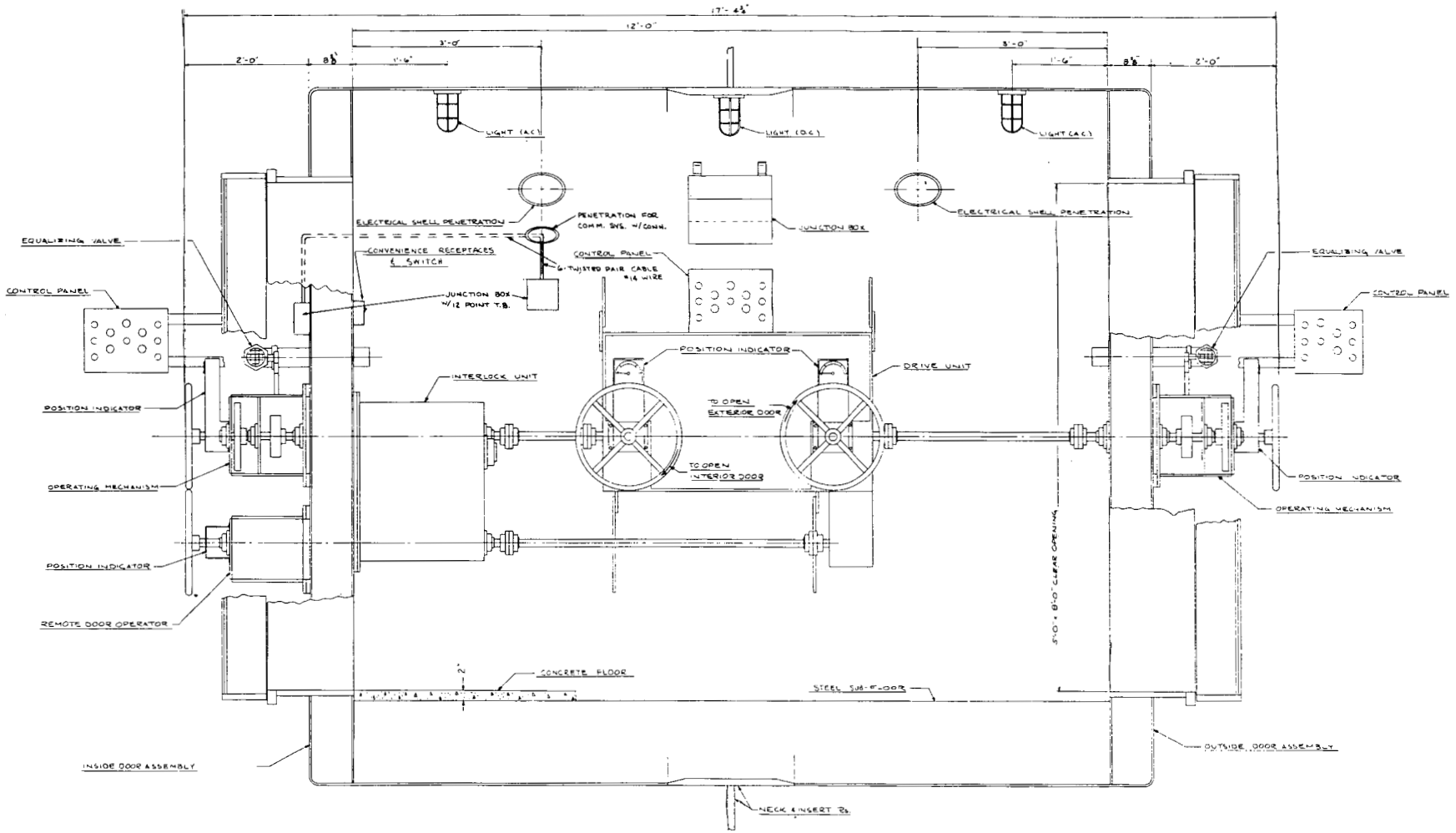

Ref. Dwg. CB&I No. 43 (8-2030).

Fig. 905-5 Sectional elevation of entrance air lock.

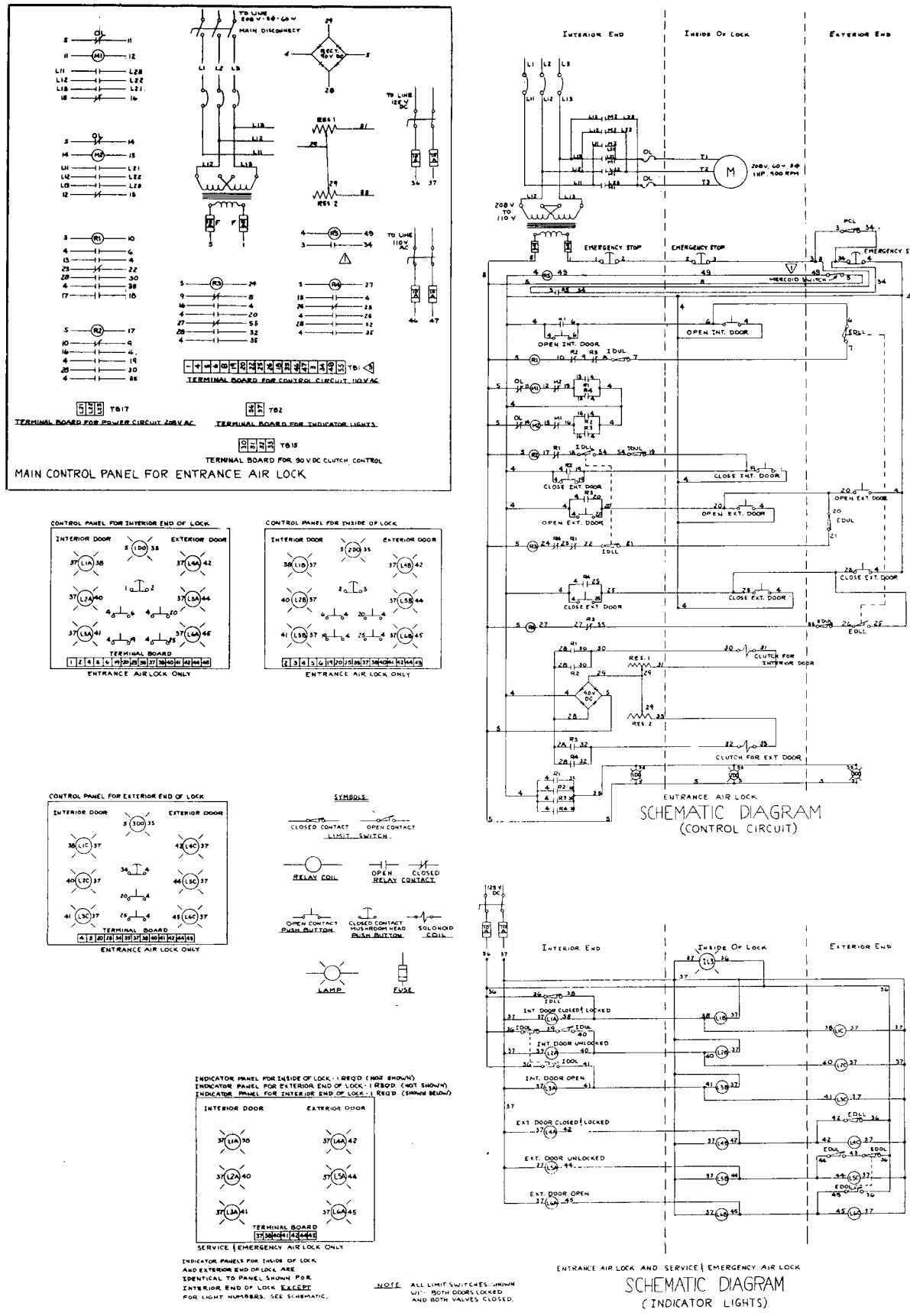

Ref. Dwg. CB&I No. 136 (8-2030)

Fig. 905-6 Schematic wiring diagram for entrance and service air locks.

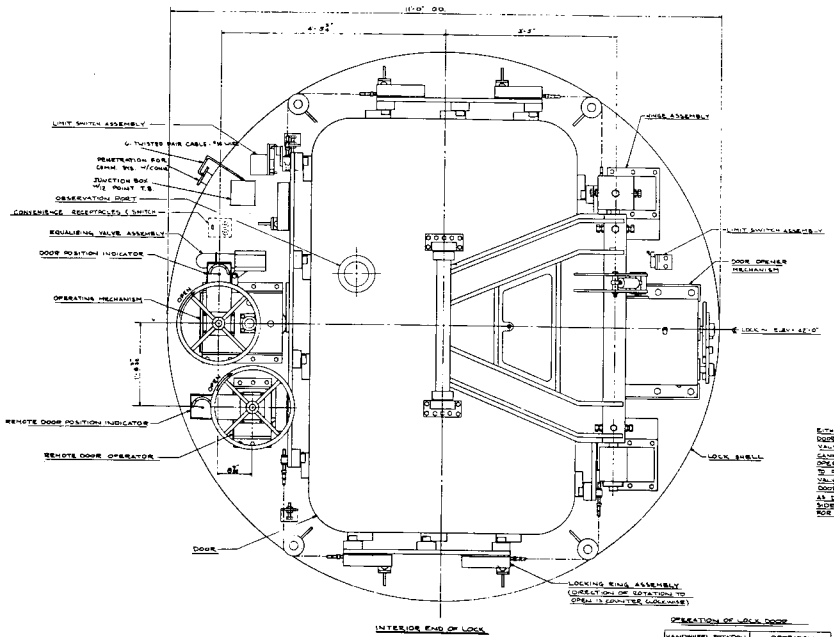

Ref. Dwg. CB&I No. 44 and 45 (8-2030)

GENERAL NOTES

EITHER DOOR CAN BE MANUALLY OPERATED FROM EITHER SIDE OF THE DOOR. DOORS & VALVES ARE MECHANICALLY INTERLOCKED SO THAT BOTH DOORS OR VALVES CANNOT BE OPEN AT THE SAME TIME. ONE DOOR OR VALVE CANNOT BE OPENED UNLESS THE OPPOSITE DOOR OR VALVE IS SEALED. OPERATION OF THE HANDWHEEL WILL OPERATE THE MECHANICAL INTERLOCK TO PREVENT OPENING OPPOSITE DOOR & VALVE. OPEN PRESSURE SEAL BING VALVE. UNLOCK DOOR & MECHANICALLY INSERT DOOR FROM SASKET SWING DOOR OPEN ON ITS HINGES. THESE OPERATIONS ARE IN THE SEQUENCE AS DESCRIBED. AN ADDITIONAL HANDWHEEL ON THE CONVENIENT BASE SIDE OF THE INSIDE DOOR WILL PERFORM THE FUNCTIONS AS LISTED ABOVE FOR THE OUTSIDE DOOR OPERATION.

OPERATION OF LOCK DOOR

HANDWHEEL ROTATION	OPERATION
0-1¼ TURNS	VALVE OPENED
1¼-4 TURNS	DOOR UNLATCHED
4-5½ TURNS	DOOR OPENED

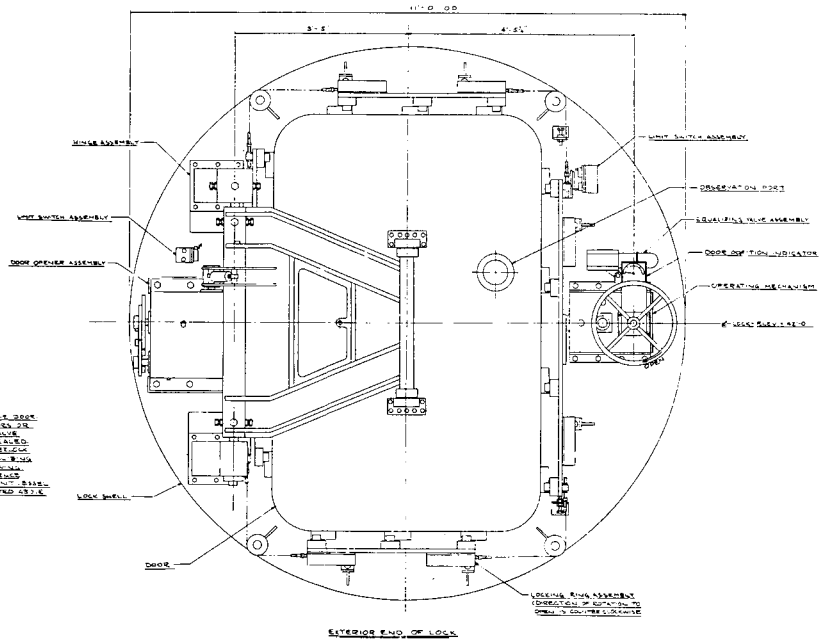

Fig. 905-7 Service and emergency air lock door details.

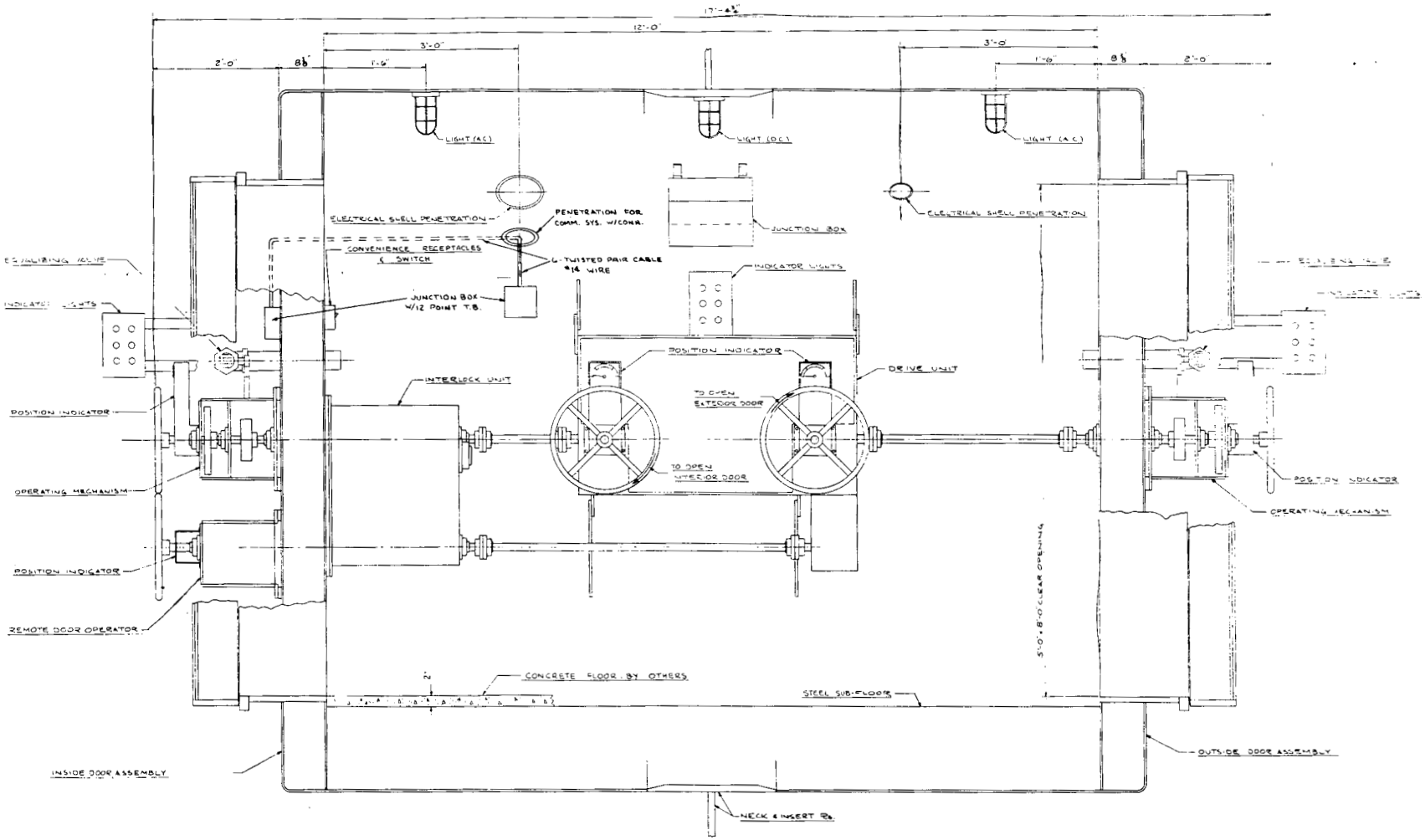

Ref. Dwg. CB&I No. 46 (8-2030)

Fig. 905-8 Sectional elevation of service and emergency air lock.

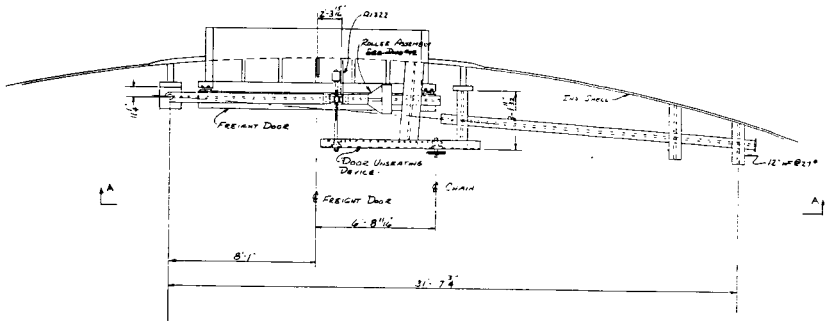

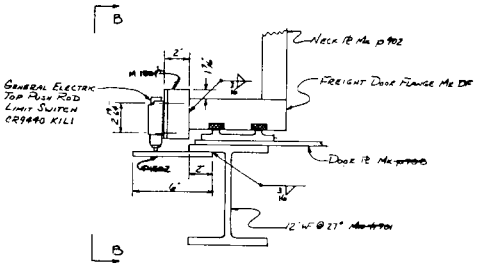

Limit Switch Assembly
Plan View

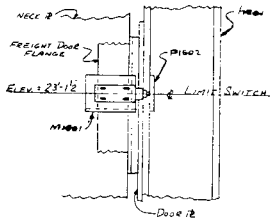

View B-B

NOTE: TWO LIMIT SWITCH ASSEMBLIES ONE ON EACH SIDE OF DOOR AT ELEV. + 23'-1½

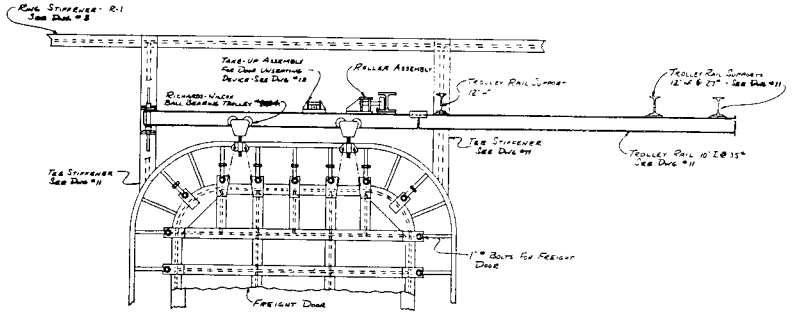

View A-A - Freight Door Operating Mechanism
(Inside View)

Ref. Dwg. CB&I No. 15 (8-2030)

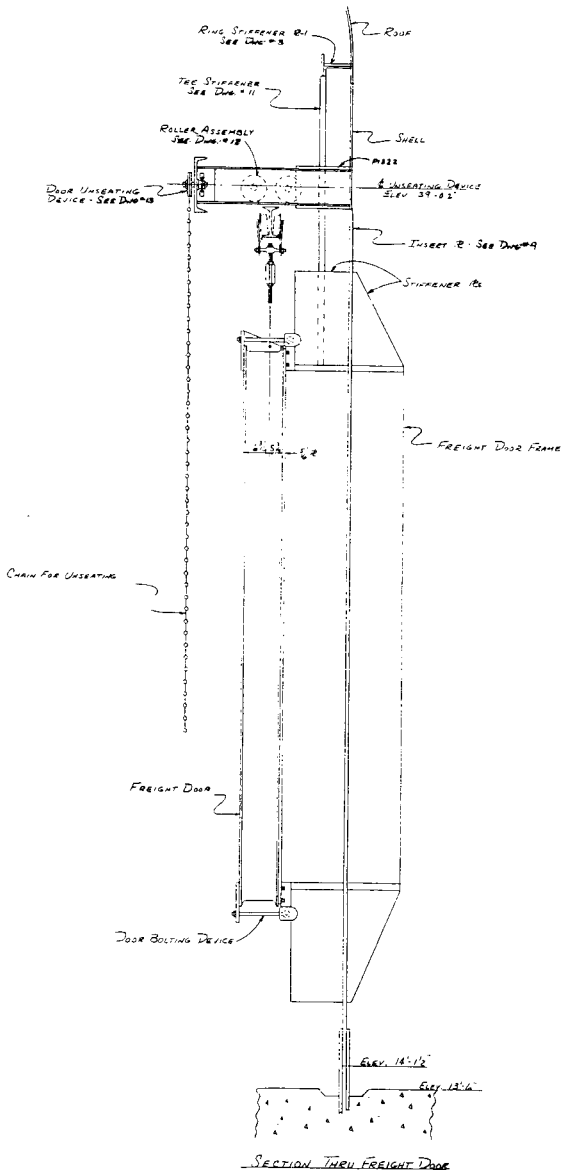

Section Thru Freight Door

Fig. 905-9 Freight door details.

Note: Ladders and Platform on door not shown for clarity.

906. BUILDING EQUIPMENT ARRANGEMENT AND SHIELD STRUCTURES

A. Main Operating Floor (El. 37 ft, 4 in.)

The main operating floor plan layout is shown on Fig. 906-1; Figs. 906-2 and 906-3 show sectional elevation views looking north and west respectively, and Fig. 906-4 shows a perspective view of the plant.

The major equipment item located on the main operating floor is the turbine generator described in Section 502. Located in the vicinity of the turbine generator are the local turbine gage board, on which are mounted the turbine start-up and operating instruments, the generator hydrogen control panel, and the exciter control panel. The only other items of plant operating equipment mounted on this floor level are the components of the fuel pool purification and cooling system. The two pump units, cooler, prefilter, afterfilter, and lead shielded mixed-bed demineralizer are centrally located in the vicinity of the center support tower for the polar gantry crane.

Shield structures — including floors, walls, and equipment shields — have been designed to limit the radiation dose rate to the operating staff while working on the main floor level to 1 mrem/hr three feet from the surface of any shield. The main source of radiation in the plant is the N^{16} emitted from the equipment containing radioactive steam and water. The N^{16} is formed by the (n,p) reaction with the O^{16} in and around the reactor core. The N^{16} beta decays with a half life of 7.35 sec. The decay is accompanied 76 per cent of the time by a 6.4 Mev gamma ray and 6 per cent of the time by a 7.13 Mev gamma ray.

Since the turbine operates directly on the steam produced in the reactor the personnel must be protected from this radiation source when carrying out their duties in the vicinity of the turbine generator. The N^{16} radiation is reduced to acceptable limits by an 8 ft, 3 in. high, 19 ft, 8 in. wide by 18 ft long hand-cranked movable shield structure which covers the turbine casing. This shield, which runs on ASCE 60-lb rails spaced 18 ft, 6 in. apart and embedded in the floor, is also designed to stop metal fragments from the turbine from penetrating the steel containment shell.

The vertical sides of the shield around the turbine high pressure steel casing end are designed solely for radiation protection and consist of 12 inches of ordinary concrete backed on both sides by 1/2-inch thick plate; the roof construction at this section is channel-stiffened 1/2 inch steel plate only since neither radiation shielding or missile protection is required above the thicker steel high pressure end.

The turbine exhaust end of the shield structure provides both missile protection and radiation shielding. The inner side of the roof

is lined with 6 in. x 6 in. structural timbers for slowing down and absorbing the energy from any internal missile fragments; this is backed, over a 5-ft-long section, by a 2-/34-in.-thick steel plate to stop the fragments from penetrating the structure. The 13-in.-thick vertical walls are constructed like the front high pressure casing end except that a 1-1/2-in.-thick steel plate replaces the concrete in a 5-ft-long section to stop fragments from the exhaust casing if this should ever occur.

The exhaust end of the turbine shield is open to permit access to the turning gear; the forward end is enclosed for radiation protection by a fixed-concrete shield enclosure over the front standard. A door, normally closed when the plant is at power, is provided at this end for shutdown-maintenance and periodic inspection access. This fixed structure, which has 18-in.-thick side walls and 12-in.-thick ceiling, contains a 12-in.-thick rectangular shield plug in the ceiling to permit removal of the turbine trip valve 30-in.-deep shield plug recessed directly below in the main floor. These removable shields are provided to permit access to the valve for inspection, maintenance, and repair when required; removal and reinstalling of the shield plugs can be accomplished with the building crane.

Any steam that leaks from the turbine is prevented from escaping outside the shield into normal access areas by inducting 1135 cfm of air through the exhaust end and discharging the air, with leakage steam, into the feedwater heater compartment below where it is withdrawn by the building ventilation system described in Section 907.

Similar type, removable, concrete stepped-shield plugs are installed in the main floor over each of the feedwater heaters for removal of these units for repair purposes, and over the hot waste storage pit.

The open space within the crane hook radius is normally used for the temporary storage of the reactor top shield structures during shutdown fuel inspections and unloading and loading operations.

The normal occupancy areas for the plant staff are located along the building periphery on the south half of the building. These 100 per cent shift occupancy areas are expected to have the radiation levels less than .25 mrem/hr. These working spaces consist of the shift supervisor's office, control room, interconnecting sanitary facilities, general purpose office on the right of the entrance air lock; the health-physics office, laboratory, toilet, canteen, electrical spare parts, and new fuel storage rooms on the left side of the air lock.

All internal and external walls of these spaces are painted, 4-in.-thick, concrete block except for the wall separating the health-physics office from the laboratory; this wall is made of 6-in. concrete block with the cells filled with concrete to reduce the radiation background in the health-physics office where low activity level counting measurements are made. The floors in general where work activity is light, such as in the offices, control room, laboratory, and canteen, are vinyl asbestos tile covered. In the fuel and electrical spare parts storage room where

heavy equipment and parts are handled, the floors are unpainted concrete. Ceramic mosaic tile is the floor finish in the toilets. The ceilings in the offices, laboratory, and canteen are exposed "alumi-coustic" suspension type. Accoustic plaster finish is used for the control room ceiling, and painted cement plaster finish is used on the ceilings of the toilets. The ceilings in the storage rooms are painted concrete.

Since these working spaces are air conditioned, as described in Section 907, and the surroundings ventilated only, the entry door to each space is normally maintained closed. Doors are the flush Kalamein type, mounted in pressed steel frames, and hinged to swing outward. Single doors, 3 ft x 6 ft, 8 in., with a single 2 ft x 2 ft window are used in all offices, canteen, and laboratory; the doors leading into the spare parts storage room and into the toilets are the same type except without the visual panel and for the latter the doors are only 2 ft, 6 in. wide. Double doors, with frame opening 5 ft, 4 in. x 6 ft, 8 in., are used in the fuel storage and control rooms; the doors for the former are solid and the latter has a 20-in. square window in each door. Viewing visibility from the control room into the plant is supplemented by two 8-ft-long by 4-ft, 2-in.-high windows in the wall on each side of the entry double door.

The individual air conditioner units for the control room and offices on the right side of the entrance air lock and for the laboratory and connected offices on the left side are each mounted above these spaces on floor level 51 ft, 4 in. Access to the control room wing air conditioner is by ladder adjacent to the shift supervisor's office. This floor space, protected by a 3-ft, 5-in.-high pipe rail, is designed for a live load of 50 psf; the bulk storage of spare parts and/or other non-combustible equipment is prohibited in this area. The floor space over the laboratory and adjacent office sections, also hand-rail enclosed, is designed for a floor loading of 125 psf and may be used for storage of non-combustible equipment or supplies. Access to this area is by the stairway leading from the main floor up to elevations 70 ft, 0 in. and 68 ft, 0 in. and by a ladder on the outer wall of the fuel storage room.

With normal entry and exit from the plant through the personnel air lock leading into the administration building, radiation monitoring equipment is located near this air lock for personnel protection. A hand and foot radiation counter, racks for dosimeters, film badges, and protective wearing apparel, and a clean-up sink are provided to ensure that personnel leaving the building do not transport any radioactive contaminants outside the containment building. The air lock on the north side of the building, directly opposite the personnel air lock, is used only for personnel emergency use in case the other is not properly functioning, and to transport lightweight equipment into the building. Both air locks are described in Section 905.

The construction details and finish of the machine shop and electrical maintenance shop, located on the north side of the building, are similar to those for the spare parts and fuel storage rooms. Since maintenance

of slightly radioactive parts is expected, a removable shield hatch and overhead trolley are an integral part of the machine shop; parts to be reworked are decontaminated in the compartment below the machine shop and the trolley hoist is used for lifting into the shop bay.

The reinforced concrete main operating floor is 12 in. thick except for areas directly above the compartments in the basement containing radioactive equipment, which are made thicker for shielding purposes. The floor over the feedwater heater, reactor purification, main condenser, and vapor sphere compartments is 24 in. thick and over the condensate regeneration and waste collection and treatment rooms the floor is 18 in. thick.

The design live load for the main operating floor within the radius of the crane rail support columns is 500 psf except over the hot waste storage hatches which are designed for a live load of 150 psf. This main floor area, except on the hatches, can safely support the future 60-ton shipping cask which will occupy a 6 ft x 6 ft floor area. Outside the crane support column circle the floor is designed for a 200 psf live load plus an allowance of 35 psf for pipe and conduit loads. The main floor supporting steel beams are anchored to the crane support columns, the reactor biological shield steel liner, and the concrete walls of the main shield compartments in the basement.

Since the steam piping leaving the reactor vessel at elevation 58 ft, 10 in. conveys radioactive superheated steam containing N^{16} and this line penetrates the main operating floor in passage to the turbine, the main steam line above the main floor is encased in a ventilated concrete pipe chase to limit the dose rate below 1 mrem/hr 3 feet from the shield on the main floor level. The shielded pipe chase is made of ordinary concrete and the vertical walls are 21 inches thick.

Personnel access to the basement floor level is by two stair wells; one is located near the entrance air lock and the other is located near the emergency air lock. Heavy equipment is transferred between these two levels with the building crane through a hand rail protected, 15 ft x 24 ft, 10 in. open freight hatch located directly above the truck ramp in the basement.

B. Basement Floor (El. 16 ft, 0 in.)

The 28-ft-dia. biological shield structure which contains the reactor pressure vessel, described in Section 308, extends through the main operating floor up to elevation 68 ft, 0 in., and down into the basement floor area shown in plan on Fig. 906-5.

Directly below the reactor bottom biological shield plug is the shielded reactor circulating water pump room shown in elevation view on Figs. 906-2 and 906-3. The shield wall consists of the 28-ft-dia., 1/4-in.-thick, steel biological shield tank and 3.5 ft of ordinary concrete on the inside of the tank wall. The shield thickness is based on limiting the dose rate to 2.5 mrem/hr three feet outside the shield wall.

The steel biological shield tank extends down into and is welded to the 31-ft ID, 11-ft high, 1/2-in. wall, steel tank embedded in the base mat. The pump room floor (el. 7.5 ft), is formed by the 2.5-ft protective concrete cover over the tank bottom. The embedded liner tank, located directly below the reactor, is installed to protect the 6-ft thick concrete foundation mat against damage and also to serve as a pressure-tight membrane to prevent outleakage during an accident resulting in missiles which might crack the concrete cover.

The weight of the biological shield structure, pressure vessel and contents, and the floor attached loads are transmitted to the foundation mat through eight load bearing reinforced-concrete columns which are an integral part of the pump shield wall. The reinforcing steel dowels connecting the columns to the foundation mat are seal welded where they penetrate the seal liner to eliminate any pressure leaks at this point. The reinforcing steel in the support columns and the interconnecting reinforcing steel tied to the concrete embedded neutron shield tank to which the pressure vessel is welded, are designed to restrain the vessel from lifting like a rocket by the propulsive force of the escaping steam which could result on brittle failure of the pressure vessel shell. This design feature was adopted for safety containment reasons since the absolute positive proof against such an event occurring, which is considered highly improbable, cannot be claimed for the operating life of the reactor vessel.

The 1.5-ft annulus between the 28-ft OD biological shield tank and 31-ft ID reactor pit liner forms a water moat outside the pump room. Eight horizontal, rectangular sloped openings, (approximately 7 ft, 6 in. wide with top of opening on outside and inside 2 ft, 8 in. and 3 ft, 6 in. above pump floor level respectively), in the base of the pump room shield wall, connect the annular moat with the pump room. The 31-ft ID pit is filled with 14,000 gallons of water to a level 3 ft above the pump floor. The design objective of the water filled pit below the reactor pressure vessel is to minimize the buildup of pressure in the containment building by quenching the flashing water released from the reactor vessel as a consequence of a rupture of water line attached to the vessel. The steam released from a pipeline fracture in the pump compartment will be quenced if the steam release rate is slow. If the break is large, the water in the pit will be ejected through the annular moat and form a water spray outside to assist in quenching the steam escaping through the moat. The vent openings in the pump compartment are sized to limit the pressure build-up in this space to 20 psig when the highly improbable accidental rupture of a forced circulation pipe occurs and the pipe line opening is equivalent to the cross section area of a 16-in., Schedule 100 pipe.

The annular moat outside the pump room is covered with 1-in. x 3/16-in. steel grating (top at el. 16 ft, 0 in.) and the water filled space inside is covered with 1-1/4-in. x 3/16-in. grating (top at el. 11 ft, 4 in.). The grating serves as a working floor surface for these areas.

Access into the pump room from the feedwater heater compartment is normally restricted during plant operation. Entry is through a steel

pressure-tight door with 2 ft, 6 in. by 5 ft, 6 in. clear opening, and which contains a quick closing ventilation grill which automatically closes when the pressure in the pump room exceeds 1 psig. The door is designed to withstand a 20-psi differential pressure. The door opens into the pump room, and is sealed by a neoprene gasket which is forced against the door frame by sliding dogs actuated by the door handwheel. The entry door is shielded on the feedwater heater room side by a 2.5-ft-thick concrete labyrinth to reduce the radiation level in this compartment. The reduction in the thickness of the labyrinth entrance walls, compared to the 3.5-ft-thick main shield wall, was possible because of the location of the door with respect to the circulation pipe system.

To permit removal of equipment from the pump room a portion of the pump shield wall has been made of solid concrete block mortared in place. A 4 ft by 7 ft rectangular opening is made by grinding the weld juncture of the temporary plate to liner shell and removing the concrete block.

Inside the pump room are the two reactor circulating water pump loops and a settling chamber which collects suspended material from the water flowing to the reactor purification equipment. The pumps are protected against damage from radiation streaming through the pipe penetrations in the bottom shield plug by a 1-ft-thick disc of high density iron-aggregate concrete, 20 ft in diameter, mounted in the ceiling of the pump room at elevation 27 ft, 7 in. Local gratings at elevation 19 ft, 4 in. are installed to permit access to the valves in the circulation system for local isolation control, inspection and repair.

Directly north of the reactor circulating water pump room, and interconnected to it, is the shielded feedwater heater compartment. The concrete shield walls in this compartment have thickness as shown on Fig. 906-6. Entrance to this compartment is through a 3-ft, 4-in. x 7-ft, 0-in. wire mesh door in the northwest labyrinth wall entry. The scattered dose rate three feet from the gate entry is estimated to be 1 mrem/hr. The calculated dose rates three feet outside the east, south, and north walls is 2.5 mrem/hr and for the west wall 2.0 mrem/hr. Due to the N^{16} activity within this compartment, access within this compartment when the plant is running is restricted.

The feedwater heater compartment contains the three vertical low pressure feedwater heaters (No. 1, 2, and 3), and the single high pressure feedwater heater (No. 4). Fig. 506-2 shows a perspective view of the heaters in this compartment. Since the floor in this region is recessed (el. 14 ft, 6 in.), to provide headroom above the heaters, a platform grating at elevation 18 ft, 6 in. is provided to permit maintenance access to the valves and controls in the feedwater and drain piping systems. A raised grating platform at elevation 24 ft, 6 in. permits access to the gate and non-return valves in the four steam extraction lines leading to the respective headers.

The feedwater heater compartment also contains the major components of the main steam; reactor safety and relief valve steam; and turbine bypass steam systems. The main steam stop valve; attemperator and control valve; the three-way bypass valve; the turbine trip valve; the three reactor pressure safety valves; the pressure relief; and the minimum flow valve are all located in this region. Access to the valves located under the turbine in this compartment is from the platform grating at elevation 24 ft, 6 in.

The extraction steam, turbine inlet steam, turbine bypass steam, safety valve discharge steam, and gland seal steam pipe lines all enter the condenser shield compartment through pipe sleeves on their route to the turbine and the desuperheater component of the condenser. The condenser is completely radiation shielded on all sides, except for the wire mesh door entry (2 ft, 6 in. x 7 ft, 0 in.) on the south end of the shield compartment. The thickness of the vertical shield walls on all sides varies between a minimum of 2.0 ft and maximum of 2.5 ft, exclusive of the thicker (5 ft x 5 ft) turbine pedestal columns which are a part of the condenser shield compartment. The shield walls on the north and south sides are made thicker (2.0 ft) than the walls on the east and west sides (2.5 ft), since less external area of the hotwell containing the N^{16} bearing condensate is exposed and since the north and south walls are further away from the hotwell. The east and west walls are parallel to the long dimension of the hotwell. Radiation attenuation in the vertical direction from the hotwell radiation source for personnel protection on the main operating floor is provided by the turbine itself and its covering shield structure and by the floor slab around the turbine. In the aisle formed by the south wall of the condenser compartment and the north wall of the hot waste storage pit, the expected dose rate due to radiation scattering through the condenser compartment entrance is .06 mrem/hr.

To permit maintenance of the circulating water valves and the condenser, which for the latter usually will consist of plugging, cleaning and/or replacement of condenser tubes, the north end shield wall covering the fixed 10-ft, 6-in. shield opening has been designed as a moveable unit. The 2-ft-thick reinforced concrete sliding shield is 13 ft square, trolley suspended on overhead rails, and is chain-drive operated. Maintenance of this type will be performed while the reactor is in a shutdown condition.

The condenser air removal equipment — the normally used twin steam jet air ejectors and the start-up motor-driven evactor — are both housed in individual shielded compartments on the east side of the condenser shield compartment. The air ejector and delay hold-up tank are housed in one shield room and the evactor and turbine gland seal exhauster blowers and condenser in another. These shielded rooms are separated by the access aisle to the twin condensate pumps and generator surge protection cabinet, as shown on Figs. 906-5 and 906-6.

The air ejector compartment requires the thickest shielding because the air ejector concentrates the N^{16} activity produced in the superheated

steam leaving the reactor pressure vessel. Due to the high activity level within this personnel restricted compartment, and in order to limit the exposure dose rates outside the shield walls to 2.5 mrem/hr three feet from the shield walls, the vertical walls have been made 4.0 ft thick and the ceiling 3 ft, 4 in. thick. The 10-cu ft ceiling-mounted, 20-in. dia. delay tank reduces the activity level of the air/gas mixture leaving the air ejector compartment and entering the iodine trap in the vapor sphere compartment across the aisle from the ejector room. Shielding of the pipe between these two compartments is not required.

Access to the air ejector compartment is through a normally closed 2.0-ft x 7.0-ft wire mesh door in the south wall of the compartment. Since the normal access is restricted in size, a section of the south wall of this room is made of mortared solid concrete block which can be removed if the ejectors have to be repaired outside the compartment. The expected dose rate at the entrance to the compartment is 7.5 mrem/hr, which is due to scattered radiation through the opening and direct radiation through the 32-inch thick wall at the compartment entry location. Directly above this compartment, the expected dose rate will be approximately 10 mrem/hr three feet above the 27 ft, 0 in. floor level and less than 1 mrem/hr on the main operating floor level.

The shield compartment containing the evactor and turbine gland seal condenser has 2-ft thick walls and ceiling and the shielding has been based on the use of the start-up evactor instead of the steam jet air ejector unit. During normal plant operation with the evactor secured, the expected dose rate outside the compartment shield walls, due to activity in the gland seal condenser, will be only 0.13 mrem/hr. The entry into the turbine gland seal/evactor room is through a 2-ft, 6-in. x 7-ft wire mesh door in the 12-in. labyrinth concrete wall on the south side of the compartment.

Directly above the air ejector and gland seal/evactor shield rooms, at common 27 ft, 0 in. floor level, are located the turbine bearing drain enlargement exhauster and the generator neutral ground cabinet as shown on Fig. 906-5. Access to this level from the basement floor level is by a ladder mounted on the north wall of the gland seal/evactor compartment. At this same level, access is available also to the underside of the generator for inspection of the generator leads, bearing oil, seal oil, and hydrogen cooling piping systems.

Radioactive wastes such as filters, ion exchange resins, baled paper, highly contaminated tools, etc., are temporarily stored in the hot waste storage cell. This shielded compartment, accessible only from the top through removable hatch plugs in the main floor level, has a floor area at elevation 16 ft, 0 in., which is 11 ft, 0 in. wide by 16 ft, 5 in. long. The height for storage of wastes is 15 ft, which is established by the underside of the concrete plug support beams. There

are 36 removable hatch plugs, and the open space for entry of wastes is 20 in. x 27 in. in 24 of the 36 access zones; along the long sides of the storage pit the access width is only 9 inches. For items to be stored that are larger than the forementioned clearance spaces, the shield plugs can be removed to provide larger openings if needed from time to time. The thickness of the vertical concrete walls and the concrete plugs is 3 ft, 6 in.

Located between the hot waste storage pit and the reactor circulating water pump room is the reactor water purification and preheater compartment. Inside this room are located the two reactor purification system pumps, the regenerative and secondary coolers, the electric preheater, and the motor operated valves associated with the respective systems. The elevations of the regenerative and the secondary cooler are 18 ft, 6 in. and 22 ft, 0 in. respectively. Access to this area when the plant is at power is normally restricted, due to the N^{16} activity of the reactor water in the purification system. The N^{16} activity level is a function of the flow rate through the system. Entry into the compartment when the plant is running can be accomplished by reducing the water flow through the components during the period of access. The dose rate in the compartment from the feedwater heater and pump room sources is not expected to exceed 2.5 mrem/hr. Since equipment removal, particularly the relatively long heat exchangers, is not possible through the 3-ft, 4-in. x 7-ft, 0-in. gate in the labyrinth entry on the south side of the compartment, a 2-ft x 6-ft removable concrete block section, directly in line with the heat exchangers, is made a part of the two-feet thick south shield wall.

Nearing the ceiling of this compartment at elevation 26 ft, 0 in., are the two reactor annulus exhaust fans mounted on a platform attached to the east wall above the preheater.

The feedwater cycle equipment items which are not housed within the shielded compartments are the two condensate pumps and the two reactor feedwater pumps. Because of the decay time within the condenser hotwell the dose rate from the condensate and feedwater is expected to be at nominal background level. The condensate pumps are located in the aisle space between the air ejector and gland seal shielded compartments. The feedwater pumps are located on the outside of the west wall of the feedwater heater compartment.

Conventional power plant equipment items not containing radioactive media are also located outside the shield walls. The turbine-generator lubricating oil tank with integral pumps and coolers, and the oil filtering equipment components floor mounted below the oil tank, are located outside the north wall of the feedwater heater room adjacent to the reactor feedwater station. The generator seal oil control equipment is located outside the east wall of the air ejector compartment. The generator hydrogen and CO_2 bottle rack is outside the east wall of the gland seal condenser compartment.

The perimeter area in the basement is devoted primarily to service facilities. The compartments in this section that are specifically designed as shielded areas are the vapor sphere and decontamination rooms on the north side of the building and the liquid waste retention tank room, liquid waste process room, and condensate resin regeneration room on the south side of the building.

The vapor sphere room has 12 in. thick concrete walls, 24 in. thick ceiling. This room contains the components of the radiolytic gas cleanup system described in section 410; the 1300-cubic-ft vapor sphere, the two charcoal traps, the 90-cubic-ft delay tank, and the charcoal trap recirculation blower. Valve stem extensions penetrate the west wall of the compartment to permit, by chain operation of the valves in conjunction with motor operated valves, the remote transfer operation of diverting the active gases to the vapor sphere and cleanup by recirculation through the charcoal bed. During normal plant operation personnel can enter the compartment through the 3 ft, 4-in. by 7-ft, 0-in. wire mesh door in the labyrinth entrance in the west wall.

The walls and ceiling of the decontamination room adjacent to the vapor sphere compartment, are 12 in. thick. Inside this room, which is used for decontaminating and cleaning equipment to be serviced or repaired, is a stainless steel service sink, work bench and miscellaneous mechanical and electrical equipment for carrying out decontamination operations. Decontaminated equipment requiring rework in the machine shop overhead can be lifted into the latter area through a removable hatch located in the ceiling of the decontamination room.

The shield wall and the ceiling thickness of the liquid waste retention room and the liquid waste process room, which are adjacent to each other, are 12 in. and 18 in. respectively. The liquid waste retention room contains the three, vertical, 4000-gallon storage tanks and the floor mounted, horizontal, 1000-gallon ion exchange regeneration waste neutralizing tank. Wastes from the various floor sumps and contaminated equipment drains throughout the plant are discharged into the retention tanks for monitoring, decay, treatment and eventual disposal. The neutralizing tank alternately receives the acid and caustic solutions from the condensate resin regeneration operations. Its holdup volume is sufficient to permit the various column effluents to neutralize each other before they are discharged into the retention tanks.

Liquid wastes that are above permissible radiation levels are processed in the liquid waste treatment room. Inside this compartment are located the electric liquid waste evaporator/condenser unit, the two liquid waste transfer pumps, and the waste collection valve manifold. The controls for the evaporator are mounted outside the shield wall to the left of the 2-ft, 6-in. by 7-ft, 0-in. wire mesh entrance door.

The reprocessing of the contaminated condensate ion exchange resins is carried out in the shielded resin regeneration room, which has 18-in. thick concrete walls. Depleted resins in the condensate demineralizers

are transferred to the two anion and cation regeneration tanks by the sluicing pump also in this compartment. Directly outside the compartment, near the labyrinth gate door entrance, is the control panel where all steps in the resin regeneration process are performed. Since acids are handled in this room, 4-in. high curbs are constructed in the floor to prevent the spread of spilled acids; the floor is protected against acid damage by a 1/8-in. thick acid resistant finish.

The lead shielded condensate purification system components — three demineralizers, two prefilters, and two afterfilters — are located in the vicinity of the waste storage pit east shield wall and arranged as shown on Fig. 906-5, with an aisle between the rows of demineralizers and filters. The similar components of the reactor purification system are also located in the same general plant area. A 7-1/2-ton monorail hoist runs directly above all the reactor purification units and the condensate filters allowing the hoist to position the waste transfer shield cask over any given unit for removal of spent resin cartridges or filters.

The components of the reactor shield cooling system are located outside the shielded liquid waste treatment room. These are the shield cooling heat exchanger, the two circulating pumps and the two filters. The components of this system, which circulate cooling water through the neutron shield tank and cooling coils in the bottom and top shield structures, are not individually shielded or housed in a shielded compartment, since the expected dose rate from the system is below the 2.5 mrem/hr level set for the basement level.

Building and plant service auxiliaries which do not normally contain radioactive fluids are also located on the peripheral area of the building. The components of the control air, and service air systems, described in section 511, are located on the west side of the building between the air exhaust fan room and the shield cooling system area. In this bay are the control and service air compressors; the aftercoolers; the air receivers; and the control air filters and air dryer.

The structures housing the air inlet fan, located adjacent to the freight door and ramp, and the air exhaust fan on the west side of the building are similarly constructed. The concrete outer walls and ceilings are 8 in. and 6 in. thick respectively. The roofs of the air inlet fan room and the air exhaust fan rooms are at elevations 31 ft, 3 in. and 29 ft, 2 in. respectively. A 5-ft, 4-in. square section filled with 8-in. concrete block is installed in the wall of each fan room to permit removal of the fan rotor if this is required. Access into each room is through a 3-ft, 0-in. by 7-ft, 0-in. flush kalamein door.

The filter bank frame in the air exhaust room is embedded in an 8-in. hollow concrete block wall which extends from the 16-ft, 0-in. floor level up to 26 ft, 6 in. Provision is made for the installation of a similar type filter bank in the air inlet room if operating experience indicates that air inlet filtering is required.

The processing of the pre-treated Zeolite water for plant and reactor water makeup is done in the makeup water treatment room on the south side of the building. In this bay, formed by the shield walls of the condensate resin regeneration and liquid waste retention rooms, are contained the components of this system; the two (2) cation and anion resin tanks, the single mixed bed demineralizer column, degasifier-clearwell unit, and two transfer pumps. This fully automatic system is controlled from the control panel outside the curbed region. The floor protective finish in this area is the same as for the condensate resin regeneration room.

The treatment of the cooling water from the outdoor cooling tower, to control the Ph and phosphate content, is carried out manually at the chemical mixing tank located in the northwest perimeter region of the building. At this same location is the chemical treatment pump, which injects dissolved chemicals into the system, and the two cooling tower circulating water pumps.

The major electrical equipment for the plant is located in two zones on the east side of the building. The incoming 440-volt, 3-phase, 60-cycle line from the outdoor station service transformer enters the 440-volt switchgear room next to the air intake fan compartment and is distributed to the electrical cubicles in the switchgear room south of the freight door and below the main control room. Both electrical compartments are 7-ft, 2-in. high, and are the open ventilated type formed by 10-gage wire mesh panels. Entry into the switchgear room is through a wire mesh double door with a 5-ft, 4-in. by 7-ft, 0-in. opening. Two entrances, one double door and one single door, are provided in the electrical equipment room.

Inside the latter fenced area are the three metal-clad motor control centers, the single a-c motor operated valve load center, the d-c motor operated valve load center, the control rod relay cubicle, and the a-c/d-c equipment. This latter consists of the battery rack, two silicon rectifiers and the a-c/d-c switchgear cabinet. Other electrical equipment located in this enclosure are the 225-kva building lighting transformer, two 10-kva instrument transformers, 9-kva emergency lighting transformer and the amplifier cabinet component of the communication system.

C. Reactor Refueling Floor (El. 68 ft, 0 in.)

This working area around the top of the reactor biological shield consists of a cantilevered reinforced concrete floor projecting horizontally outward from the biological shield, described in section 308, and the fuel pool walls. The floor is designed for a 2000-psf live load or the placement of the future 60-ton shipping cask on any 6 ft x 6 ft area including an allowance of 25 per cent of the load for impact. Access to this level, protected on all sides by a 3-ft, 6-in. high pipe rail, is by the stairway leading up from elevation 51 ft, 4 in.

Two rails of the ASCE 60-lb type, with wheel stops at each end are embedded on 18-ft center spacing in the 68-ft, 0-in. floor. These rails straddle the 17-ft, 2-in. ID, 2-ft, 6-in. deep, steel lined, control rod motor drive trench and the fuel storage pool. The motor operated fuel coffin carriage assembly, described in section 407, rides on these rails between the reactor and the fuel storage pool during the fuel handling operations when the shield structures above the reactor are removed for this purpose.

Between the reactor and the fuel storage pool two 12-in. Schedule 40 hot waste storage pipes are embedded in the concrete for the storage of miscellaneous contaminated tools. A removable steel jacketed concrete shield plug, 36 inches long, fits into the 14-in. Schedule 40 top end flush with the floor level. The available height between the bottom of the storage pipe and the underside of the shield plug for storage of radioactive equipment is 19 ft, 11-1/2 in.

The normal position for the fuel coffin carriage when not in use is at the reactor end of the pool, over the steel grating cover plate on top of the concrete embedded fuel unloading chute. The fuel unloading chute has a 46-1/2-in. dia., 11-in. deep, recessed portion for accommodating the fuel coffin, a central 16-in. ID stainless steel lined opening for the passage of fuel elements into the pool, and a 3-in. wide dog-leg opening for transferring fuel elements underwater to the fuel storage racks. The upper 4 ft portion of the chute contains a 3/8-in. thick steel conical section around the 1/4-in. wall central stainless inner pipe which is filled with 4-3/4 in. of lead at the top and 3/4 in. at the bottom. This conical lead shield reduces the radiation to the surroundings when an irradiated fuel element is being lowered into the guide channel from the fuel coffin seated in the lead backed floor recess. A supplementary lead shield plate, 3-ft high, 6-in. wide, and tapered in thickness from 4 in. down to 1 in. is embedded in the concrete at the end of the chute 3-in. slot and a 2-ft x 31-in. x 3-in. thick lead plate is installed between the chute and the pool lining to reduce the radiation levels to the surroundings when the fuel coffin door is opened. Below elevation 62 ft, 10 in. down to the pool floor the slot opening into the pool side wall is increased to 17-1/2 in.

The fuel storage pool is 10 ft wide in the direction normal to the coffin rails, 15 ft long, and 29 ft, 4 in. deep relative to the reactor floor level. The pool is enclosed by a pipe handrail which can be removed when fuel handling operations are performed. The vertical sides of the 5-ft thick concrete walls are lined with 1/8-in. thick stainless steel, Type 304 plate; the 5-ft thick concrete pool bottom is correspondingly protected by a 1/4-in. thick stainless steel liner.

At the end away from the reactor two fuel storage racks are bolted to support plates welded to the pool bottom liner. The two racks are fabricated in egg-crate fashion from 1/8-in. thick stainless steel sheet and contain dividing partitions some of which are made of 1 per cent boron stainless steel to keep the fuel stored below critical levels.

The two racks shown in Fig. 407-6 can accommodate a total of 64 superheater and 124 boiler fuel assemblies respectively. Floor space is provided at the reactor end of the pool to accommodate a 60-ton fuel shipping cask. An underwater cutting tool can be mounted on and operated from the fuel coffin carriage. This cutting tool is used for removing the superheater extension pipes while the superheater assemblies are in the storage rack and prior to loading the spent fuel in the shipping cask. When not in use, the cutting tool is stored in the pool with the other fuel handling tools.

The pipes that are seal welded to the water-tight pool lining and embedded in the concrete pool walls and bottom are stainless steel and are of the following sizes:

Function	Size	Centerline Elevation
Emergency Condenser Vent	8-in. Schedule 40S	61 ft, 0 in.
Return from Fuel Pool Purification System	2-1/2-in. Schedule 80S	67 ft, 6 in.
Discharge to Fuel Pool Purification System	3-in. Schedule 40S	66 ft, 0 in. (Pool Scupper)
Overflow	2-in. Schedule 80S	67 ft, 3-1/8 in.
Demineralized Makeup Water	1-in. Schedule 80S	66 ft, 0 in. (Pool Scupper)
Bottom Drain	1-1/2-in. Schedule 80S	38 ft, 8 in.

The water level in the pool is maintained at elevation 67 ft, 1 in., one inch over the scupper wall, by a ball-float-operated stainless steel valve mounted in the overflow scupper in the east end of the pool. For details of the pool cooling and circulating water system refer to section 408.

The gate at the north end of the reactor refueling floor level leads to a stairway down to a grating platform at elevation 61 ft, 4 in. where the eleven superheated-steam manually-operated angle valves are located. Normal access to this section is prior to the reactor going critical to manipulate each valve for removal of water in the superheater fuel assemblies; and after each assembly is voided, for resetting and locking each valve at its required open position. In addition to the four 2-in. and seven 3-in. valves at elevation 65 ft, 0 in., the pipe mounted flow and temperature primary sensing elements are also accessible from the hand-rail enclosed grating level.

The steel access platform is anchored to the top of the pipe chase which is 20 ft, 9 in. wide on the inside and which encloses the eleven superheated steam pipes and manifolds, and the 6-in. saturated steam line connected to the reactor pressure vessel. The east and west side walls of the pipe chase above elevation 49 ft, 3 in. and up to the underside of the 18-in. thick reactor floor area directly above the pipe chase, and the pipe chase floor, are standard concrete and 16 in.

thick for radiation shielding. The north face of the shield wall from elevation 56 ft, 7 in. to 61 ft, 3 in., which covers the 58 ft, 10 in. elevation at which the eleven superheated steam and saturated steam lines leave the north pipe tunnel, is also 16 inches thick but made of steel aggregate concrete.

The source of radiation controlling the design of the superheater steam pipe chase shield wall is the N^{16} in the steam. The maximum dose rate three feet from the steam pipes on the platform grating is expected to be 60 mrem/hr; for this reason access to this level during operation is restricted. Conservative calculations indicate that the radiation streaming through the superheated steam pipe tunnel does not make an appreciable contribution to the total dose rate.

The 16-in. thick walls, in conjunction with the overhead 18-inch floor slab, reduce the radiation level to 1 mrem/hr three feet above the reactor floor level. The maximum expected dose rate three feet from the shield walls at a level between the main floor (37 ft, 4 in.) and the pipe chase inside floor level (49 ft, 3 in.) is 1.3 mrem/hr with 0.8 mrem/hr contributed by the 8-in. main steam line and 0.5 mrem/hr by the 10-in. superheated steam header.

Below elevation 49 ft, 3 in. the pipe chase opening is reduced in size to accommodate the 8-in. superheated steam and 6-in. saturated steam lines leading below the main operating floor level. The walls in this region are standard concrete, 21 in. thick; a solid block mortared section is installed in the east and west walls to permit access to the pipes within the pipe chase if it is required.

On the grating platform at elevation 70 ft, 0 in. and adjoining section at elevation 74 ft, 0 in., are located the 6000-gal demineralized water storage tank, the gravity-actuated reactor liquid poison injection tank, the emergency condenser, and the shield cooling surge tank. This plant section is normally not radioactive but could be if a leak should develop in the tube bundle of the emergency condenser when it is in service at the same time there is a defective fuel element in the core. The live-load design rating for the grating in this area is 125 psf. The grating platform is enclosed by a hand rail and access to the platform is via a stairway from the reactor floor level.

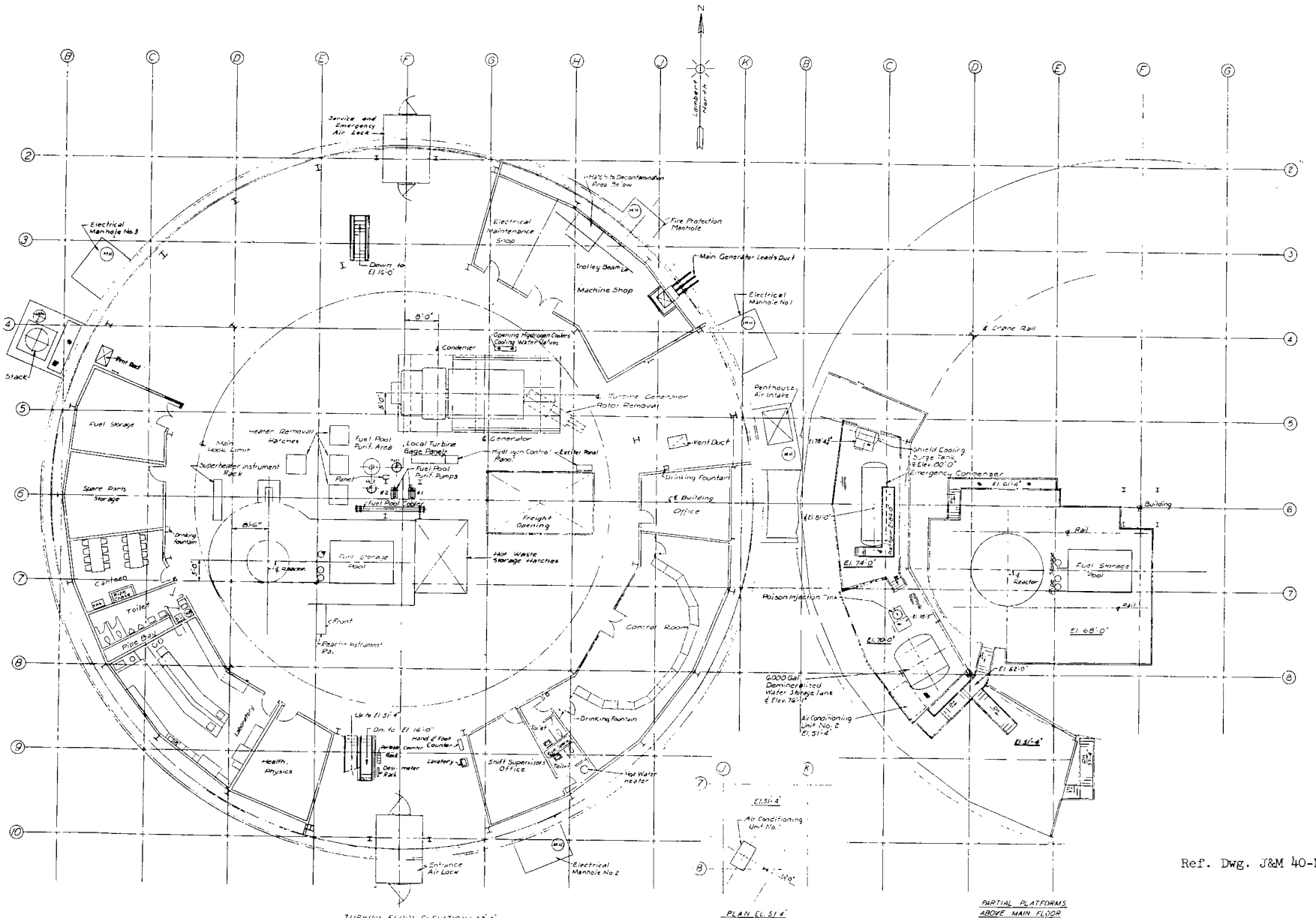

TURBINE FLOOR ELEVATION 37'-4"

PLAN EL. 51'-4"

PARTIAL PLATFORMS ABOVE MAIN FLOOR

NOTE
Grid Lines are spaced at 20'-0"

Ref. Dwg. J&M 40-M-2

Fig. 906-1 Equipment location plan - main floor (el. 37', 4").

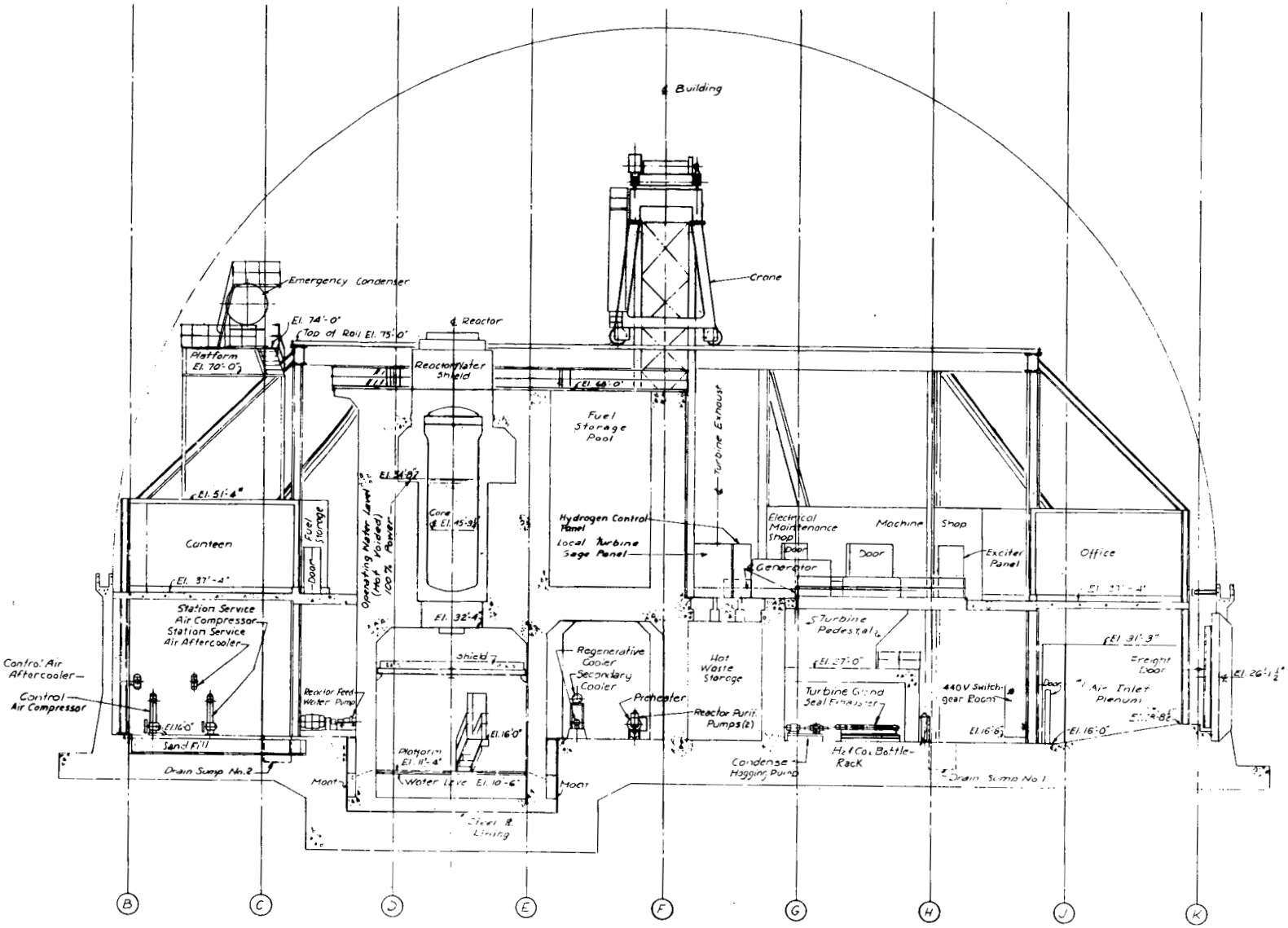

NOTE
Grid Lines are spaced at 20'-0

Fig. 906-2 Vertical elevation of containment building looking north.

Ref. Dwg. J&M 40-M-3

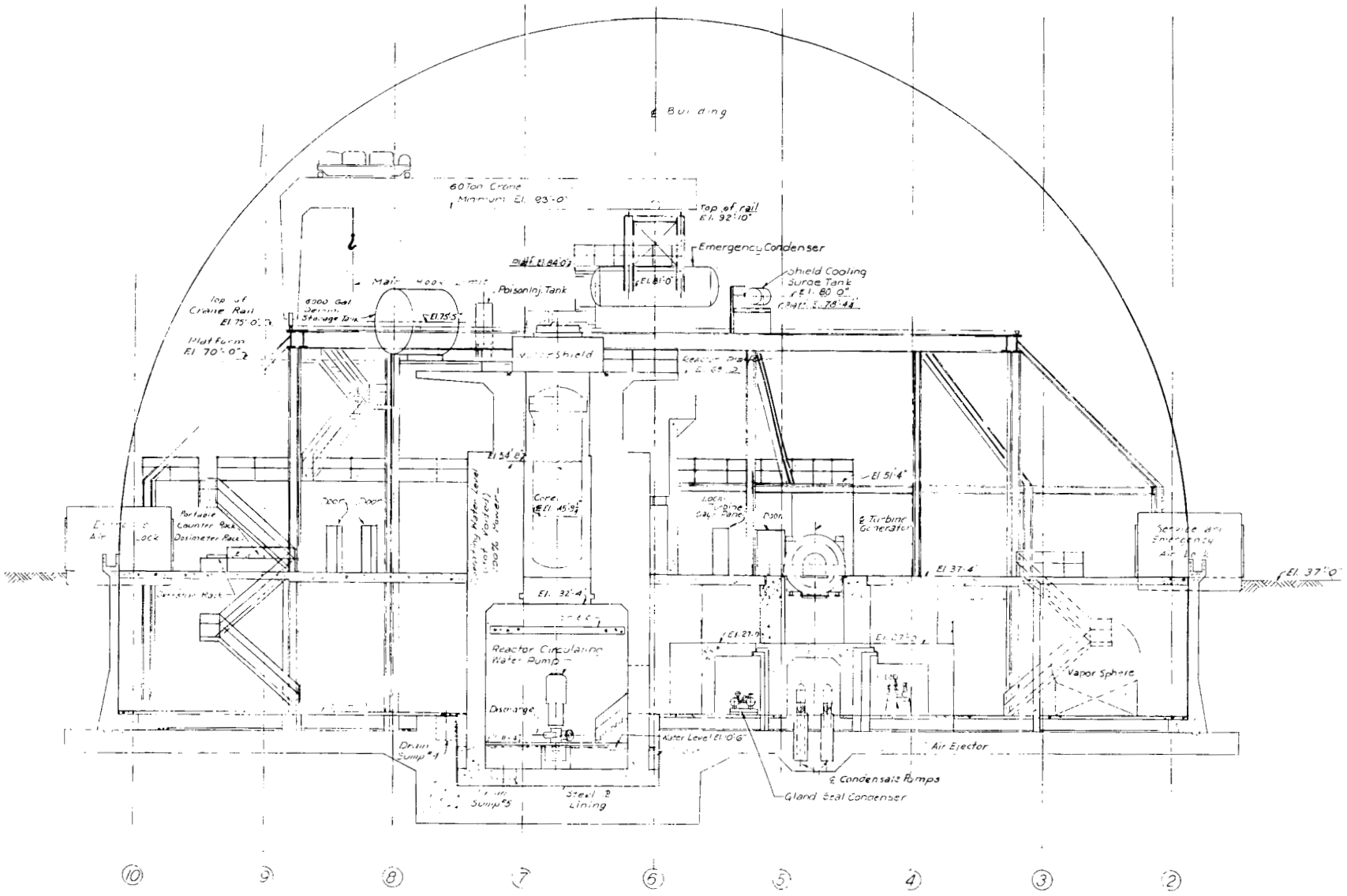

Ref. Dwg. J&M 40-M-4

Fig. 906-3 Vertical elevation of containment building looking west.

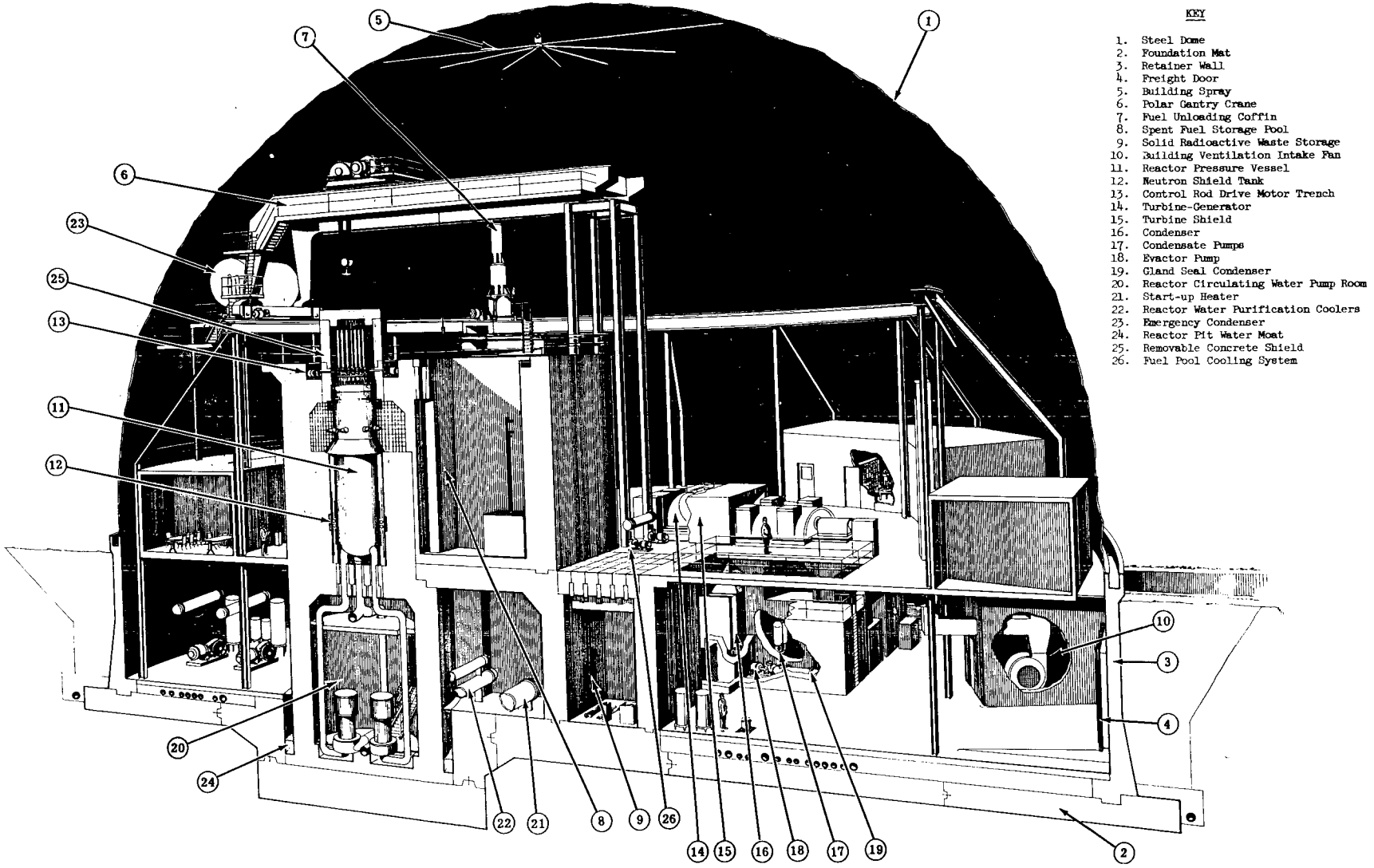

Fig. 906-4 Perspective of containment building.

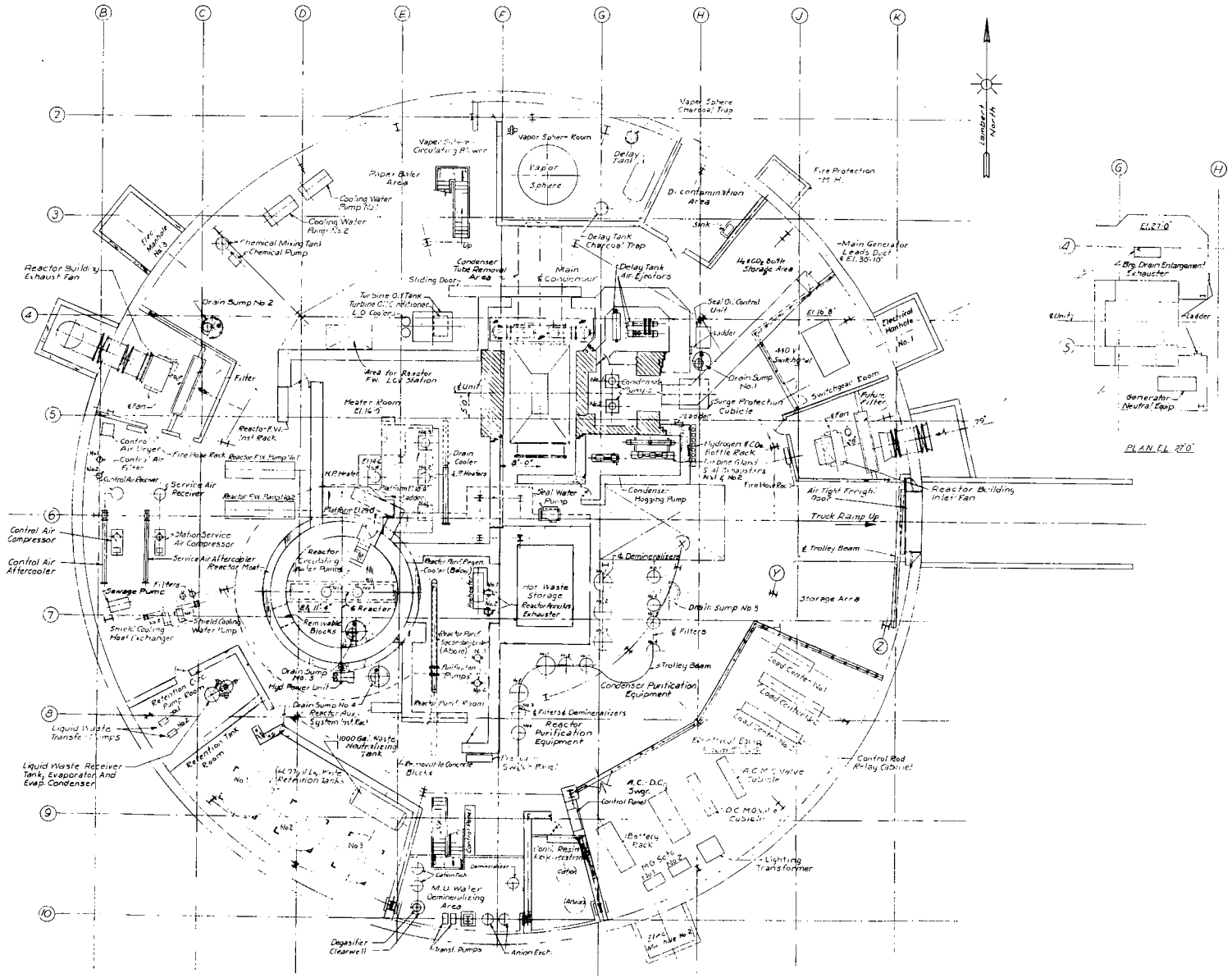

BASEMENT FLOOR
EL. 16'-0"

NOTE
Grid lines are spaced at 20'-0"

Ref. Dwg. J&M 40-M-1

Fig. 906-5 Equipment location plan - basement floor (el. 16', 0").

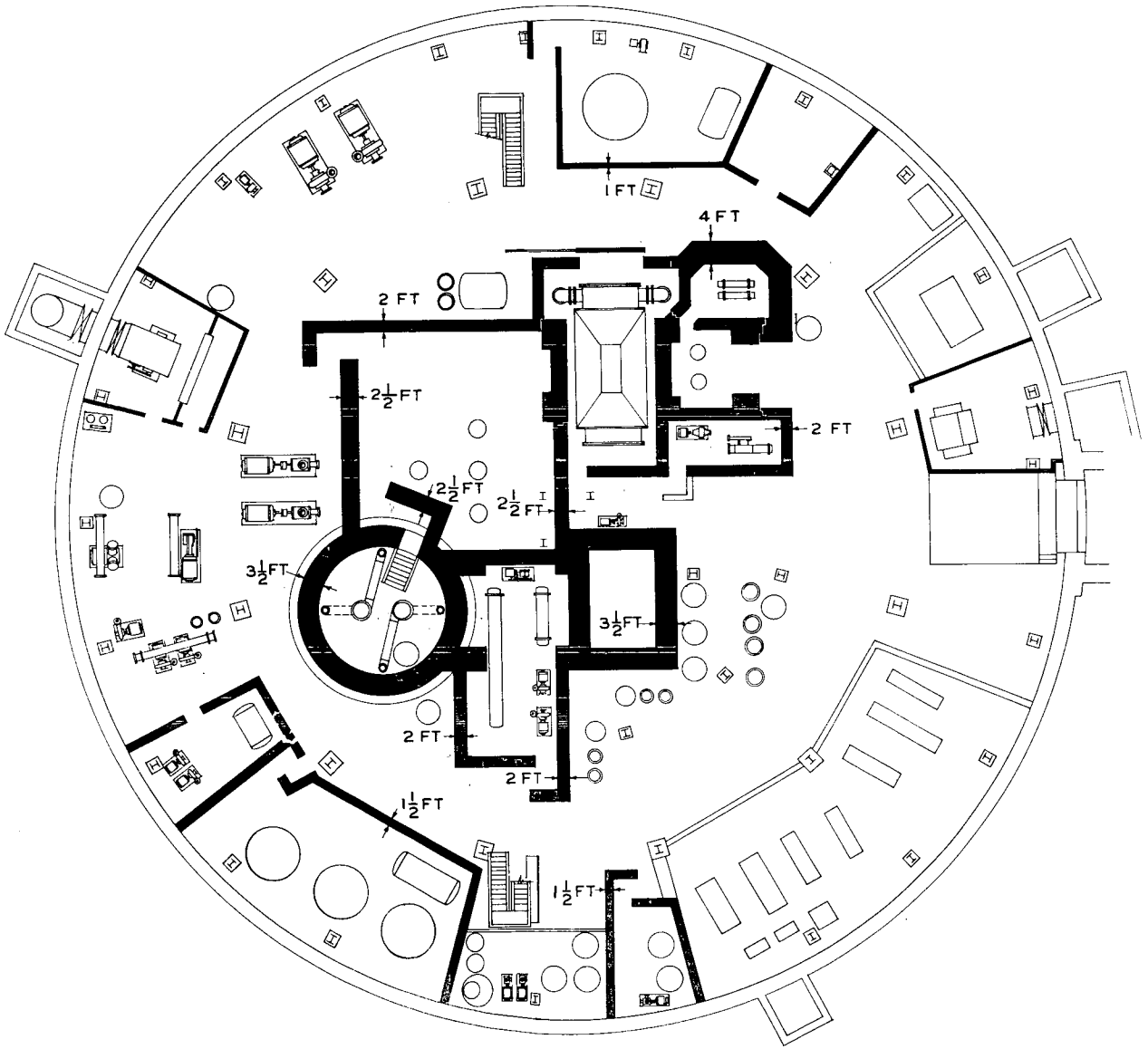

KEY

1. Liquid Waste Storage
2. Liquid Waste Processing
3. Shield Cooling Water System
4. Instrument & Service Air Supply
5. Building Ventilation Exhaust Fan
6. Auxiliary Cooling Water Pumps
7. Radiolytic Gas Holdup System
8. Equipment Decontamination Room
9. 440 V Switchgear
10. Building Ventilation Intake Fan
11. Truck Loading Ramp
12. 440 V Motor Load Centers
13. AC & DC Valve Motor Load Centers
14. AC/DC Switchgear
15. Battery Rack & MG Set
16. Make-up Water Purifiers
17. Condensate Resin Regeneration System
18. Reactor Feedwater Pumps
19. Turbine Lube Oil Filter
20. Feedwater Heater/Main Steam Compartment
21. Condenser
22. Steam Jet Air Ejectors
23. Condensate Pumps
24. Gland Exhauster/Evactor Room
25. Solid Radioactive Waste Storage
26. Condensate Filters & IX Columns
27. Reactor Water Filters & IX Columns
28. Startup Heater
29. Reactor Water Purification Pumps & Coolers
30. Reactor Circ. Water Pump Room
31. Floor & Equipment Drain Sumps
32. Waste Paper Baler

Fig. 906-6 Containment building basement (el. 16', 0") plan.

907. VENTILATION AND AIR CONDITIONING

A. Ventilation

All personnel access areas of the plant, including the limited and restricted access shielded compartments, are ventilated by the forced circulation of fresh intake air which is inducted into the building by the 50,000-cfm intake fan and discharged from the building to the stack by a 50,000-cfm exhaust fan.

Fresh air enters the building through an extruded-aluminum louvered and screened penthouse structure mounted on the air inlet manhole on the east side of the building. The 5-ft-dia. pipe penetration leading into the fan suction chamber compartment contains two air-operated quick-closing butterfly valves, one on the building side and the other in the air intake manhole; both of the intake valves and the dual-exhaust valves are the same type and automatically close on the detection of high radiation levels in the mixture of the ventilation air and the gases from the radiolytic gas disposal system described in Section 410 and shown schematically on Fig. 410-1.

The 60-in.-dia. intake and exhaust butterfly valves have A201 Gr B fabricated steel body and disc, stainless steel Type 304 shaft, natural rubber seat, cast iron seat holding keeper segments and sintered bronze silicone lubricated disc stem bearings. The disc stem is made pressure-tight against inleakage due to external pressure by a gland stuffing box at the shaft extension end and by a bolted and gasketed cover at the thrust bearing end. The disc is operated through a wire cable sheave mounted on the stem shaft; the respective ends of the cable are coupled to an integral mounted 14-in. bore, 17-1/2-in. stroke air-cylinder and enclosed-compression spring; air pressure opens the valve and spring force maintains the valve closed on loss of air pressure. Each valve is provided with two 125-v d-c, 5-amp limit switches for remote position indication. Air to the cylinder is controlled by two parallel, 3/4-in. 3-way pilot air solenoid valves; interrupting power to the solenoid valves vents the air pressure in the cylinder and the spring force results in a valve closure within (1-1/2) seconds. The operation of each inlet and exhaust valve, through the electrical control of the 110-volt power to the pilot solenoids, is from the control room; Figure 907-1 shows schematically the control circuits for each of the butterfly valve control solenoids.

The intake and exhaust fans (Trane Company Type 44 B1, DWDI, Arr. 3, Model 21) are similarly constructed; each is the double-width, double-inlet centrifugal type, with backward-inclined vanes, nonconvertible construction with independent bearing pedestals and V-belt driven by a 25-hp, 440-v, 60-cycle, 3-phase, squirrel-cage induction motor. Each has inlet vane control; the intake fan vane control is manually set, while the exhaust inlet vanes are automatically regulated by a pneumatic

actuator to maintain the building pressure at a negative pressure of 1/8 inch of water. The inlet fan, designed for 1-3/4 inches of water static pressure, operates at 625 rpm and the exhaust fan with 2-in. static pressure runs at 643 rpm.

Malfunctioning of the ventilation system, i.e., low flow, is indicated in the control room by the operation of the annunciator warning system. Tilting mercury type, air flow switches mounted in the intake supply and discharge exhaust ducts, are provided for this warning function.

The starting and stopping of the ventilation fans is from the control room. Figure 907-2 shows the control circuit for the intake and exhaust fans. The electrical controls are similar except that the exhaust fan cannot be started if either intake valve is closed, and the exhaust fan will automatically stop when these valves are closed.

The intake fan discharges to two air supply, galvanized sheet metal, ventilation duct ring headers mounted on the polar gantry crane inner support columns, one below the turbine floor at approximate elevation (27 to 30 ft) and the other above the control room and offices on the turbine floor level. Directional control of the supply air is regulated by aluminum drum punkah louver diffusers mounted in the ductwork at the approximate locations below the turbine floor shown on Fig. 907-3 and above the control room and offices as shown on Fig. 907-4. Figure 907-5 shows details of the ventilation system for both areas. The air supply is distributed to the various parts of the plant as follows:

Below turbine floor elevation	32,300	flow, cfm
Above turbine floor level	12,500	
Reactor operating floor level	2,800	
Makeup for air conditioner No. 1	800	
Makeup for air conditioner No. 2	800	
Pipe chase cooling	800	
Total	50,000	

The air flow rates exhausted from the various spaces below the turbine floor for ventilation and also for absorbing the heat produced in the respective areas are the following:

Makeup water treatment room	2,400	flow, cfm
Condensate demineralizer regeneration room	300	
Retention tank compartment	2,000	
Liquid waste process compartment	600	
Control and service air area	2,000	
Cooling water and chemical treatment area	1,800	

Vapor sphere room	800
Decontamination room	400
Condenser compartment	6,000
Gland seal and exhauster compartment	500
Feedwater heater compartment	2,400
Reactor purification pump and preheater room	1,600
Reactor circulation water pump room	4,000
Remainder	7,500
Total	32,300

The exhaust duct distribution system and the approximate location of the opposed blade damper exhaust registers for the areas below the turbine floor are also shown on Figs. 907-3, 907-4, and 907-5.

The 4,000 cfm ventilating air for absorbing the heat produced in the reactor circulating water pump room enters through two (2) 12-in.-dia. counter-weighted dampers and through the entry door louvers, all of which automatically close to prevent back-flow in the event of a pipe rupture in this compartment. The air is inducted into the compartment by a locally started 4000-cfm fan mounted in the ductwork and belt driven by a 3/4-hp, 110-volt, single-phase motor. The booster fan discharges the air into the ventilation exhaust duct at approximately the same entry location as the return of the reactor vessel ventilation air by the reactor annulus exhausters.

Various auxiliary systems are vented to the ventilation exhaust system. They are the following:

1) Liquid waste retention tank vents
2) Instrument thimble CO_2 coolant
3) Reactor purification system vents
4) Makeup water treatment degasifier vent
5) Reactor solid waste storage pit
6) Waste evaporator condenser
7) Turbine oil tank vapor extractor
8) Plumbing vents
9) Laboratory fume hood blower discharge
10) Bearing drain enlargement
11) Generator seal oil vapor extractor.

To prevent leakage steam from the turbine admission valve guide stems and gland seals from spreading to areas outside the turbine shield, the turbine shield area is ventilated by a locally started 1135-cfm blower which inducts air through the exhaust end of the shield and discharges the sweep air containing any steam into the heater compartment below, where it flows into the ventilation exhaust system.

The ventilation air above the turbine floor is exhausted at two levels as shown on Fig. 907-4; through the return registers in the exhaust ring duct adjacent to the building shell at approximate elevation 60 ft, 0 in. and the return registers in the duct which extends to the top of the containment building.

The exhaust ventilation air from the two levels enter the filter compartment of the exhaust fan room where particulates picked up are removed prior to entry into the exhaust fan inlet and discharge to the stack. The filter bank consists of 30 Mine Safety Appliance Dustfoe Glass fiber units each 11-3/4 in. deep, 5 ft high, 6 ft wide rated at 2000 cfm with .25 inch water pressure drop when clean. An oil treated prefilter upstream of the main filters picks up larger particulates and minimizes the fouling of the main filters. The assembly is provided with a filter gauge which measures the pressure drop across the filter bank for the purpose of advising when to replace filter units.

The discharge from the building exhaust fan, with dual air operated valves in the discharge line similarly located with respect to the building shell as for the intake valves, enters the base of the 5-ft-dia. 1/4-inch-wall steel-guyed stack mounted on the exhaust air manhole. The stack is provided with a 2-ft x 2-ft access manhole at the base, ladder and safety guide,and painters track and trolley. The stack extends to elevation 148 ft, 4 in. which corresponds to 25 ft above the building top. The stack is guyed by four 1-1/16-in.-dia. steel galvanized cables anchored to the stack and to ground embedded piers.

B. Air Conditioning

The working spaces normally occupied by the staff and operating personnel throughout a full shift are temperature and relative humidity controlled (80°F and 50 per cent respectively.) Figure 907-6 shows the areas that are conditioned and the routing and sizes of the ductwork of the air conditioning system. The air pressure in these air conditioned rooms is maintained at a slightly higher pressure than the surroundings. The occupancy areas to the right of the entrance air lock which are air conditioned and the air circulation rates for these spaces are as follows:

Shift supervisors office	1500 cfm
Shift supervisors toilet	350 "
Control room	4400 "
Control room toilet	350 "
Office	1400 "

The machine and electrical repair shops, although 100 per cent shift occupancy areas, are not air conditioned but are ventilated with 1980 cfm of fresh air.

The service areas to the left of the entrance air lock which are air conditioned and the corresponding air circulation rates for these areas are the following:

Health-physics office	1600 cfm
Laboratory	3600 "
Toilet	500 "
Lunchroom	900 "

The spare parts storage and fresh fuel storage rooms, although not air conditioned, are maintained at normal comfort occupancy levels by intake air ventilation and local fans.

The air enters each of the air conditioned spaces through ceiling-type fixed or adjustable-type diffusers with adjustable dampers and equalizing deflectors. The control room ceiling diffusers, adjustable-type, are the circular 4-cone type. The ceiling-type diffusers for all other areas except the toilets, which are square, adjustable-flare type, are fixed square shape diffusers with adjustable damper and fixed equalizer deflectors. The air from each space exhausts through fixed ceiling register grills and returns to the suction side of the air conditioner fan.

The two air conditioners for the separately air conditioned bays are of the same type. The unit for air conditioning the occupancy areas to the left of the entrance air lock is mounted above the laboratory space. The other unit for controlling the air temperature in the control room and adjacent offices is mounted above the control room as shown on Fig. 907-6. Each air conditioner (Dunham Bush Model PAC-20A) is a twenty (20) ton self-contained "packaged" unit containing an 8000-cfm dual fan assembly coupled to a single 5-hp, 1750-rpm, 440-v, 3-phase, 60-cycle, drive motor, a shell and tube-type water-cooled condenser, two Freon R-22 receivers each with 63-lb capacity and dual semi-hermetic compressors each driven by a 10-hp, 1750-rpm, 440-v, 3-phase, 60-cycle, squirrel cage induction motor. The starting and protective controls for the components of the unit are mounted within the air conditioner housing. Figure 907-7 shows schematically the control circuits for the motor driven and electrically operated devices of the system.

The ventilation of the upper part of the reactor pressure vessel is described in Section 409.

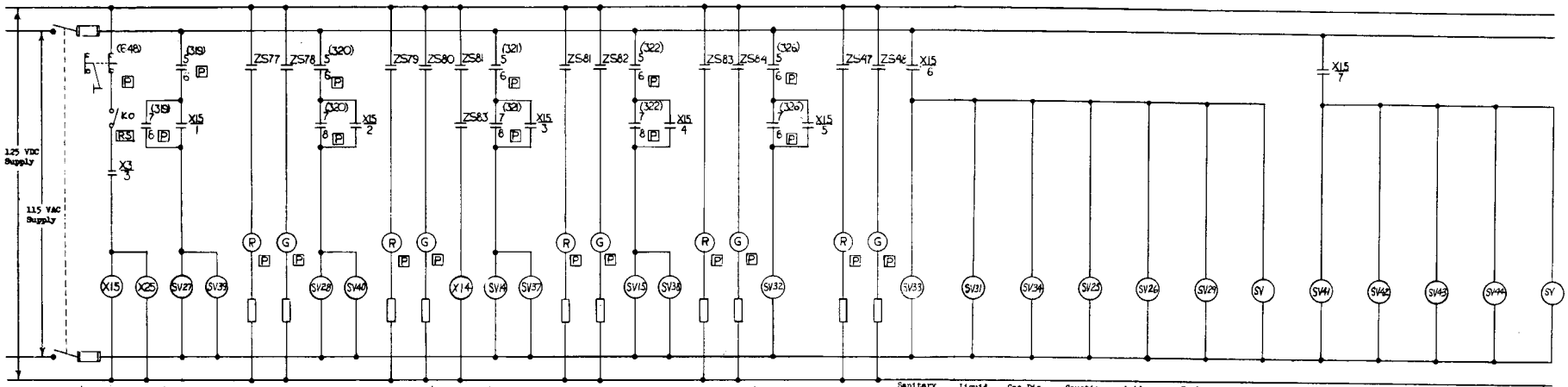

Position Switch Development
Odd-Numbered Switches

Contacts	Valve Positions	
	Full Open	Full Close
1	X	
2		X

Even-Numbered Switches

Contacts	Valve Positions	
	Full Close	Full Open
1	X	
2		X

X - Indicates closed contacts.

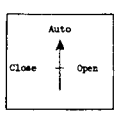

Nameplate Front View

Control Switch Development
Typical for Switches 319,320,321,322 and 326

Contacts	Positions		
	Open	Auto	Close
1 - 2		X	X
3 - 4			X
5 - 6	X	X	
7 - 8	X		

Spring Return to Auto from Open Position only.

LEGEND

648 - Emergency Control Station
319 - Control Switch Inlet Valve No. 1
320 - Control Switch Inlet Valve No. 2
321 - Control Switch Outlet Valve No. 1
322 - Control Switch Outlet Valve No. 2
326 - Control Switch Gland Seal Diversion

X3 - High Building Activity Interlock
ZS - Position Switches
SV - Solenoid Valves
* - Reactor Building Fan Interlock
P - Main Control Panel Location
U - Valve Location
X14 - Exhaust Fan & Reactor Annulus Exhauster No. 1 & No. 2 Interlock

Ref. Dwg. J&M 40-E-13 Rev. 2
40-E-18 Rev. 1

Fig. 907-1 Schematic control circuitry for building isolation valves.

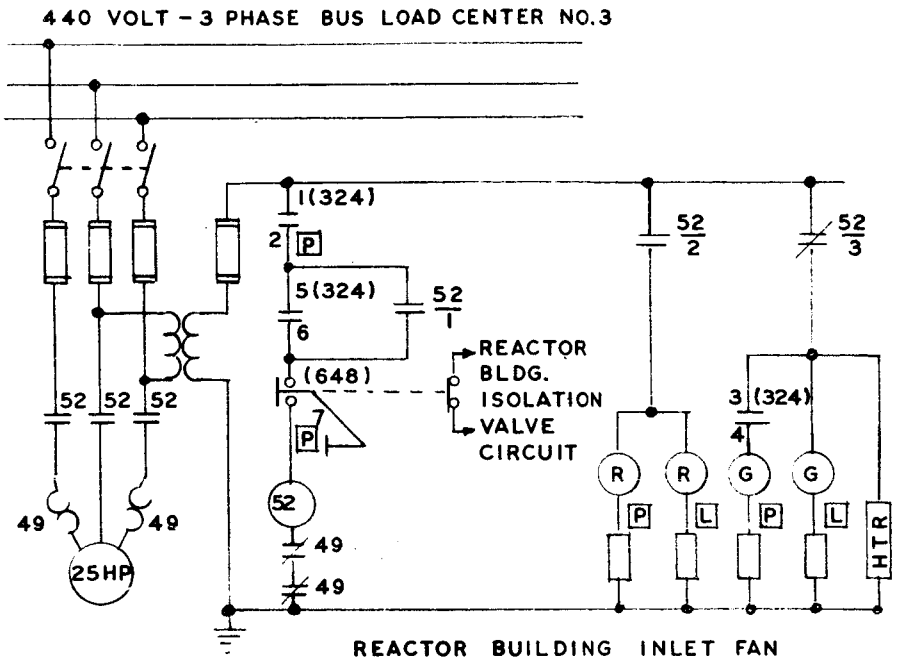

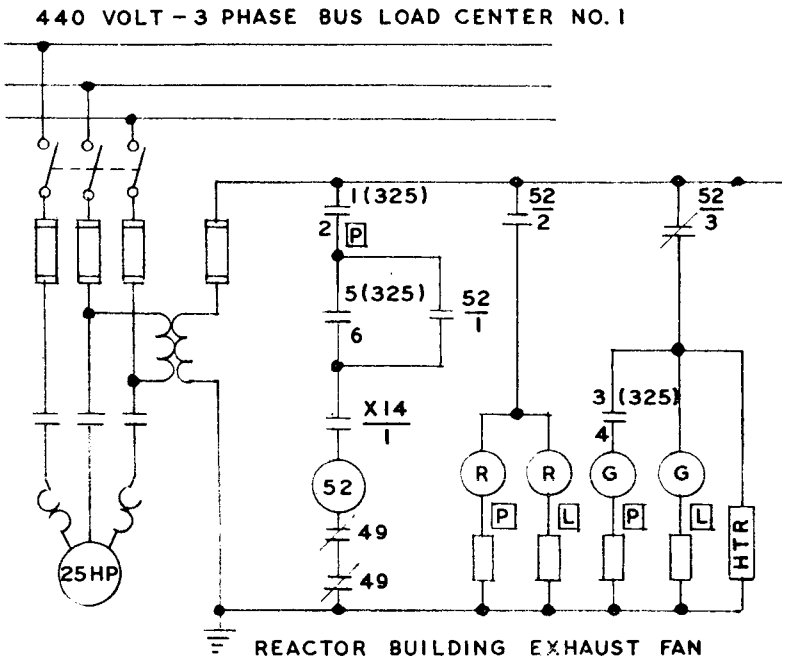

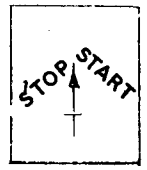

NAMEPLATE
FRONT VIEW

SWITCH DEVELOPMENT

CONTACTS	POSITIONS			
	START	CENTER	STOP	L.O. ON STOP
1 – 2	X	X		
3 – 4	X	X	X	
5 – 6	X			
7 – 8	X	X		

SPRING RETURN TO CENTER.
FOR L.O. TURN TO STOP AND PULL OUT.
"X" INDICATES CONTACTS CLOSED.

LEGEND

324	INLET FAN CONTROL SWITCH
325	EXHAUST FAN CONTROL SWITCH
648	EMERGENCY PUSH BAR
52	MOTOR STARTER
49	THERMAL OVERLOAD
X14	REACTOR BLDG. ISOLATION VALVE INTERLOCK
P	MAIN CONTROL PANEL LOCATION
L	LOAD CENTER LOCATION

Ref. Dwg. J&M 40-E-13 Rev. 2

Fig. 907-2 Schematic control diagram for building ventilation fans.

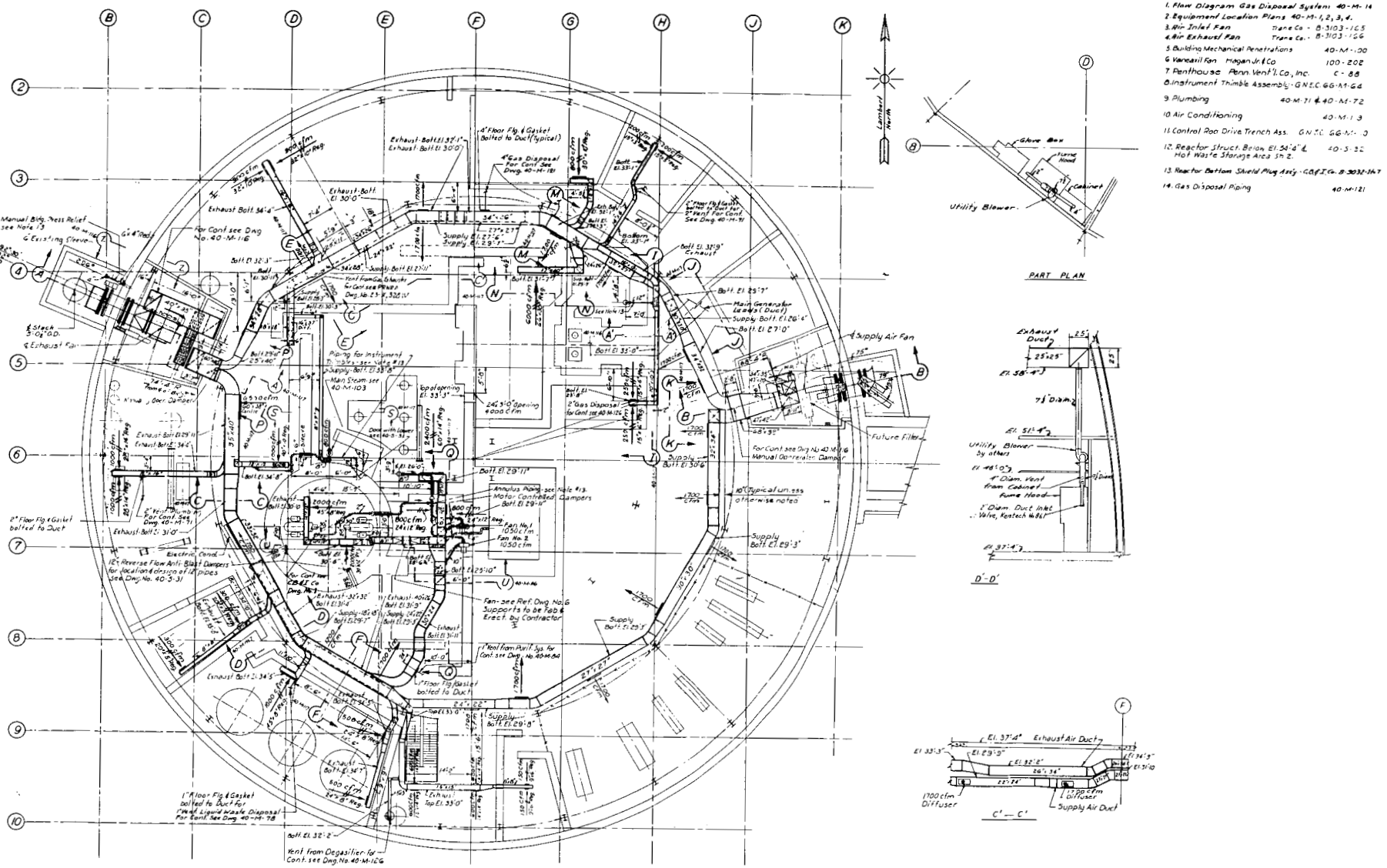

Ref. Dwg. J&M 40-M-115 Rev. 3

Fig. 907-3 Ventilation system plan below main floor level.

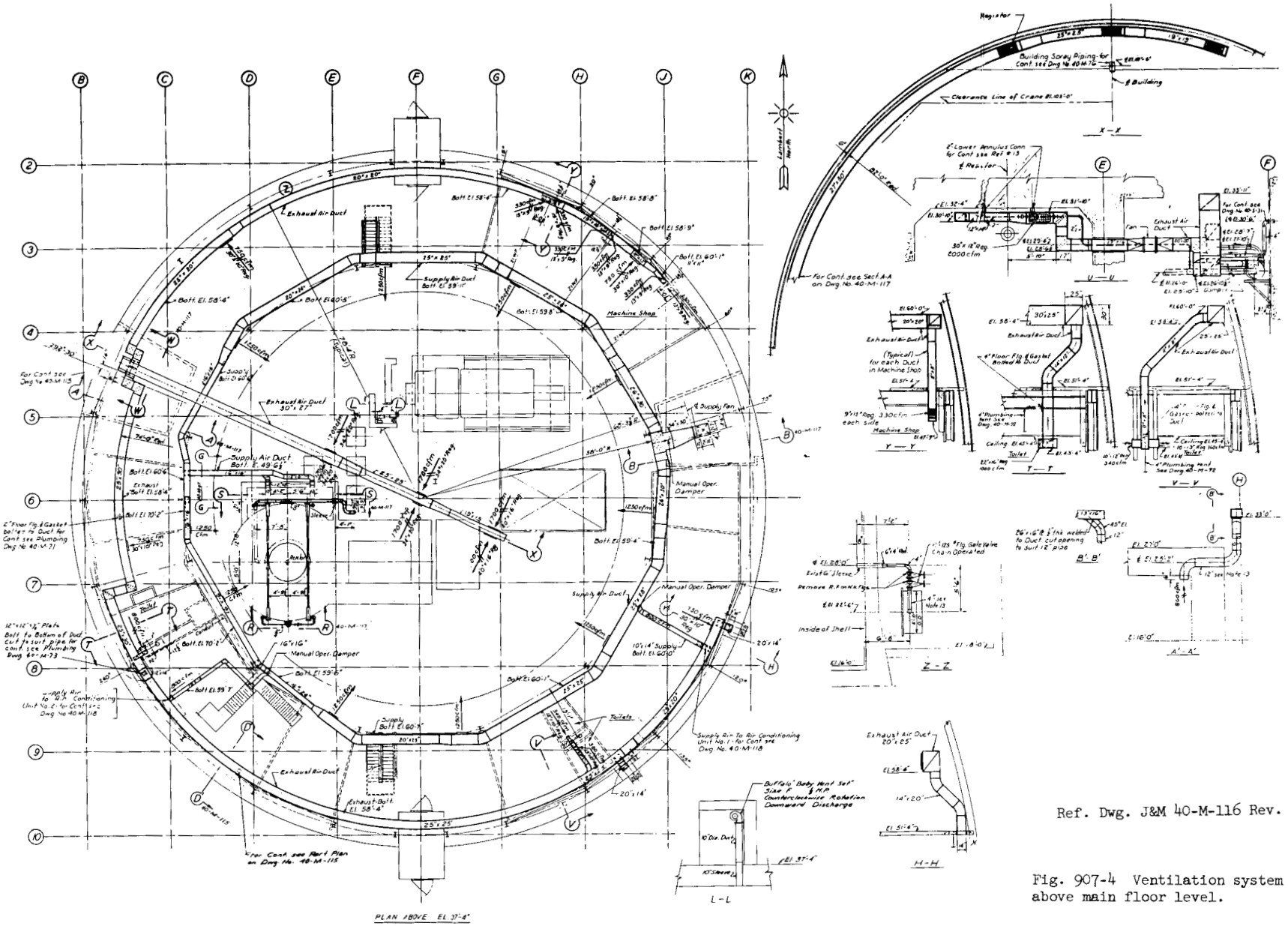

Fig. 907-4 Ventilation system plan above main floor level.

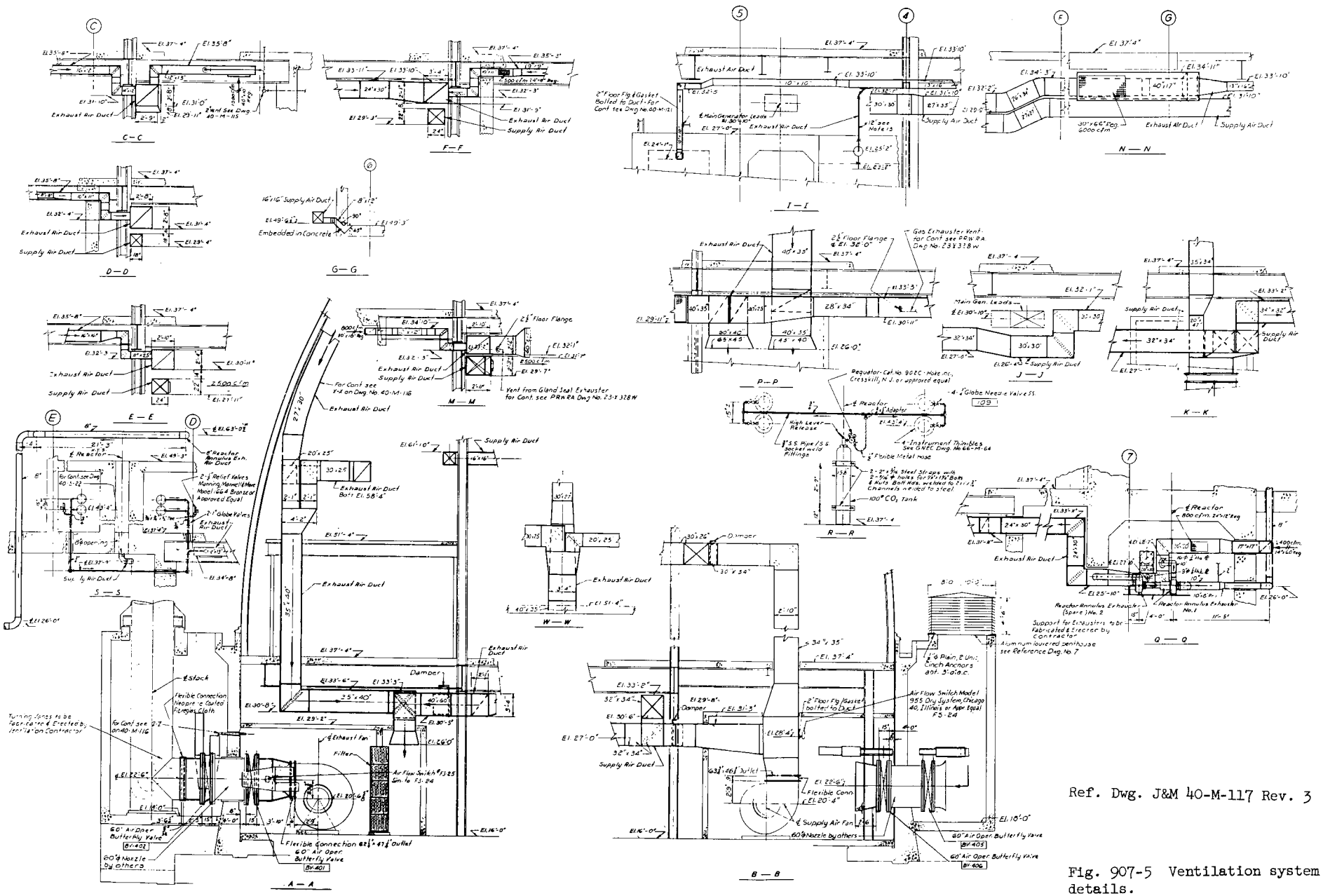

Ref. Dwg. J&M 40-M-117 Rev. 3

Fig. 907-5 Ventilation system details.

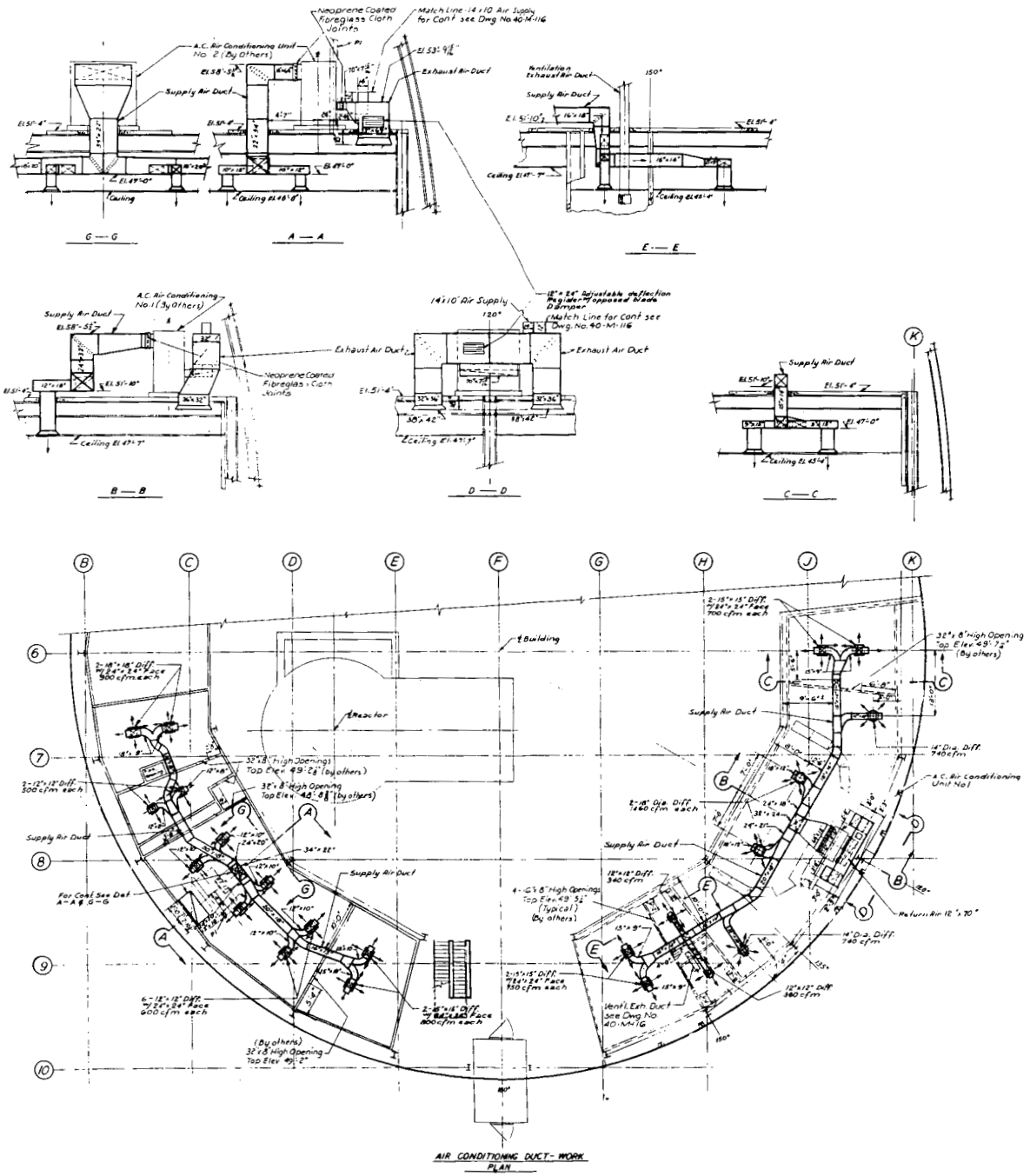

Ref. Dwg. J&M 40-M-118 Rev. 2

Fig. 907-6 Air conditioning system details.

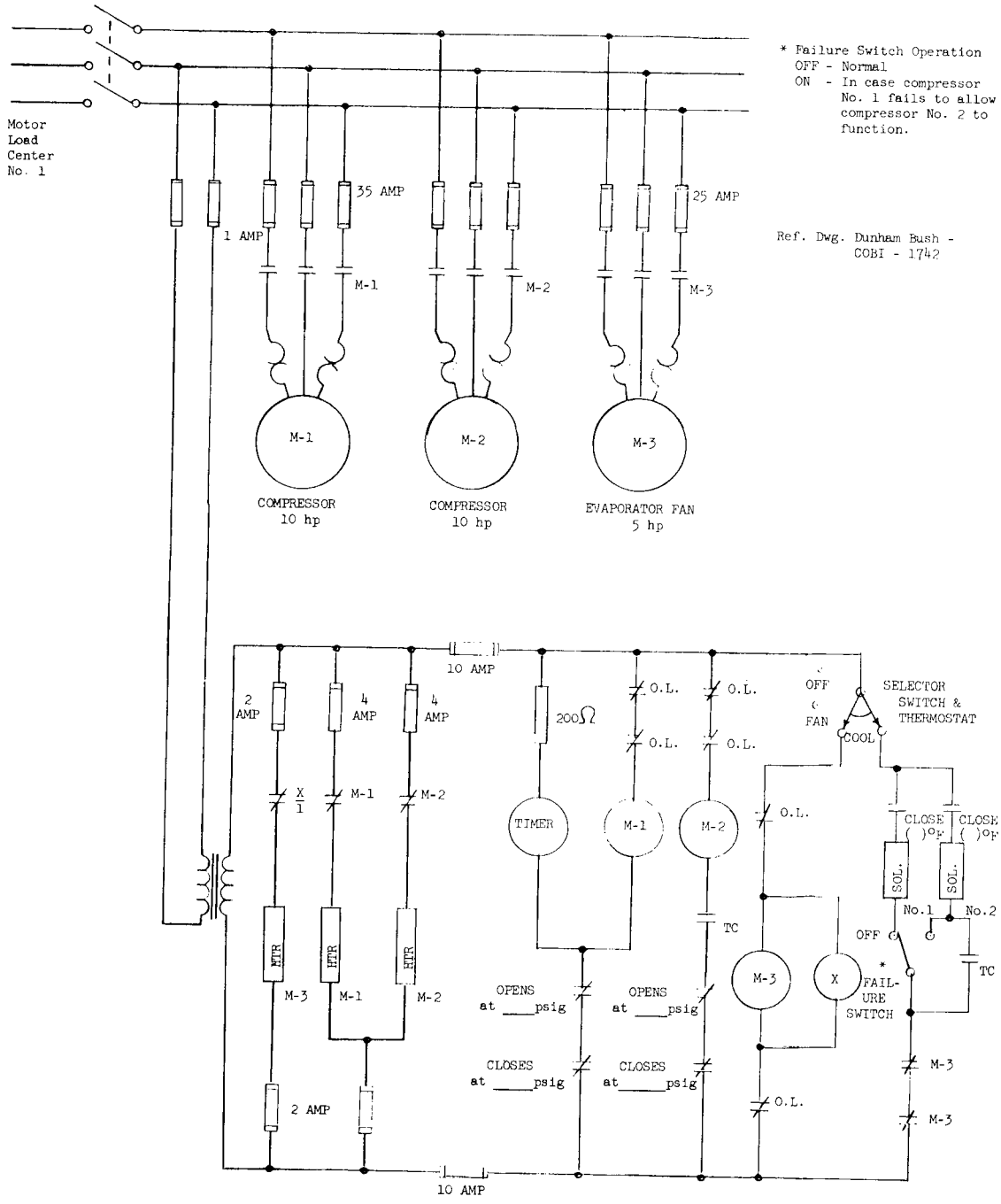

Fig. 907-7 Schematic circuit diagram of plant air conditioner units.

908. SANITARY WASTE SYSTEM

The sanitary wastes are discharged from the building to the septic tank and outside sanitary waste sewage piping system by the sewage pump. The drains which lead into the sewage pump well include those from the electric water cooler No. 1 (near lunch room) and No. 2 (in Control Room) and the "cold" plug-in drains in the laboratory sinks and those which transport the sanitary wastes from the following sanitary facilities:

Operator Toilet	Control Room Toilet	Shift Supervisors Toilet
Two (2) water closets	One (1) water closet	One (1) water closet
Two (2) lavatories	One (1) lavatory	One (1) lavatory
Two (2) urinals		
One (1) janitor sink		

The sewage pump with integral steel wet well, is located at basement floor level and outside the liquid waste process shielded compartment. The sewage pump unit is a Chicago Pump, Type S, Single, "Packaged," "Flush-Kleen" unit, with integral wet well with float control and alarm, pump isolation gate valves, strainer and overflow bar screen, and motor drive unit. The pump component, rated at 200 gal/min and 40 ft T.D.H. is driven by a 3-hp, 1140-rpm, 440-volt, 3-phase, 60-cycle, squirrel cage induction motor which is automatically started and stopped on high and low level respectively as shown schematically on Fig. 908-1.

The effluent from the sewage pump is discharged through a normally open, pneumatic-cylinder-operated 4-in. flanged ball valve with integral-mounted, 3-way, 110-volt, pilot solenoid valve. The ball valve automatically closes on loss of power to the solenoid, venting the air pressure from the power cylinder, on building stack high activity. The valve can also be closed when the operator opens the building isolation actuator circuit shown schematically on Fig. 907-1. The sanitary wastes are discharged into an underground concrete septic tank (4 ft wide, 10 ft long, and 5 ft, 8 in. high, inside dimensions), located 75 ft south of the entrance building. The wastes from the sanitary facilities in the entrance building (Section 1001) also discharge into this same tank. The effluent from the septic tank flows through a distribution box which has 5 parallel drain pipes 85 ft long connected to it and embedded in the surrounding rock and gravel fill absorption field.

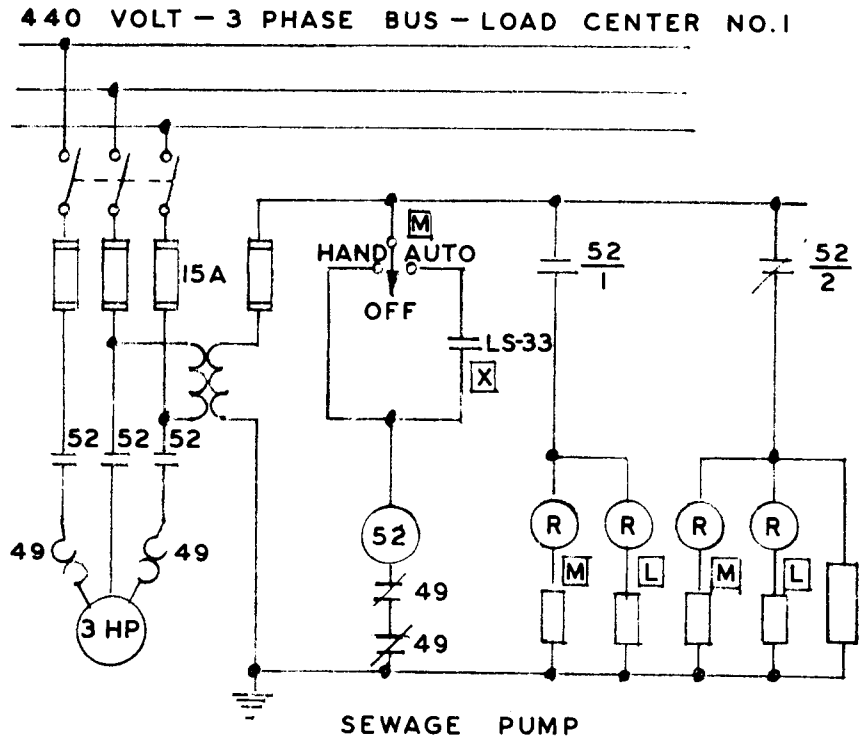

LEGEND

52 — MOTOR STARTER

49 — THERMAL OVERLOAD

[M] — MOTOR LOCATION

[L] — LOAD CENTER LOCATION

[X] — PIPE LOCATION

LS-33— LEVEL SWITCH

Ref. Dwg. J&M 40-E-14 Rev. 4

Fig. 908-1 Schematic circuit diagram for plant sanitary sewage pump.

909. BUILDING CRANE

The routine handling of heavy equipment, such as the steel rotating shield plug, vessel cover, and concrete shield plugs, as well as the turbine upper casing is carried out with the 60-ton polar gantry crane mounted on rails at elevation 75 ft as shown on Fig. 909-1. Its size was based on the future use of a 60-ton cask for the shipment of irradiated fuel elements back to a stateside processing center. The crane was one of the first equipment pieces installed during the early construction stages, and proved to be of valuable assistance during the construction. The separate positioning of the d-c motor-driven bridge, trolley and hoist hook, within a 43 ft, 6 in. hook radius and 74 ft, 0 in. lift, is controlled by a retractable push-button pendant station operable from either the reactor or turbine floor levels. Figure 909-2 shows schematically the electric control circuitry for each of the three crane drive motors. Stepless variable-speed regulation of the respective drive motors allows fine control positioning of the load. The maximum speeds of the hoist, trolley, and bridge are 15 ft/min, 33 ft/min, and 90°/min, respectively.

The weights of the heaviest parts to be lifted by the crane are as follows:

Concrete Shield No. 1	12 tons
Concrete Shield No. 2	35 tons
Concrete Shield No. 3	12.5 tons
Rotating Shield Assembly	17.1 tons
Pressure Vessel Cover Flange (with rod drives)	10.5 tons
Turbine Upper Half Casing	16 tons
Turbine Rotor	5.84 tons
Turbine Lower Half Casing	21.0 tons
Generator Rotor	9.0 tons
Generator Stator	47.0 tons
Exciter	3.35 tons
Generator End Shields (2)	7.5 tons

The drive motors for the 75-hp main hoist, 2-hp trolley, and 7-1/2-hp gantry are all 240 volt d-c, separately excited, 1750 rpm, 30-minute rated, dripproof non-ventilated type and provided with shaft coupled 440 volt a-c electric disc brakes. The brake ratings for the main hoist, trolley, and gantry drive are 345 lb-ft, 10 lb-ft, and 25 lb-ft respectively. The power source for the drive motors is a 220/440-volt, 3-phase, 60-cycle motor-generator set mounted with the electrical controls on the gantry bridge.

Operation of the crane is from a pendant push-button station containing:

1) An "On-Off" switch for the motor-generator set.

2) A three position selector switch for selecting the motion to be used, that is "Hoist," "Bridge," or "Trolley." Note that only one motion at a time is possible.
3) Two-directional push buttons for running the motion selected.
4) A "fast" or "slow" push button for increasing or decreasing the speed of the motion in operation.
5) A "reel-in" or "reel-out" push button for positioning the pendant station.

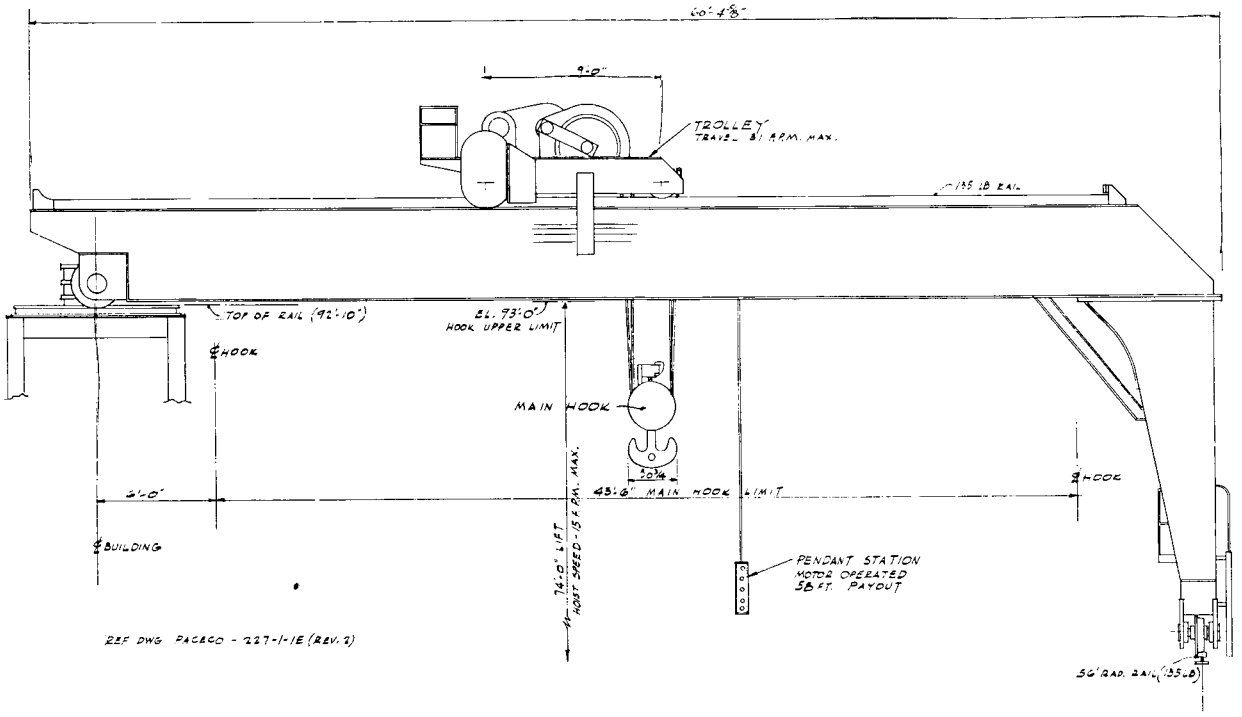

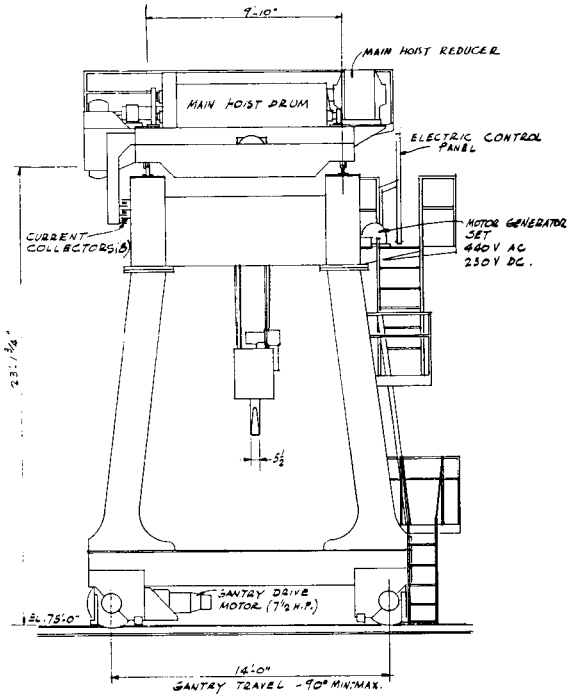

Fig. 909-1 Polar gantry crane arrangement.

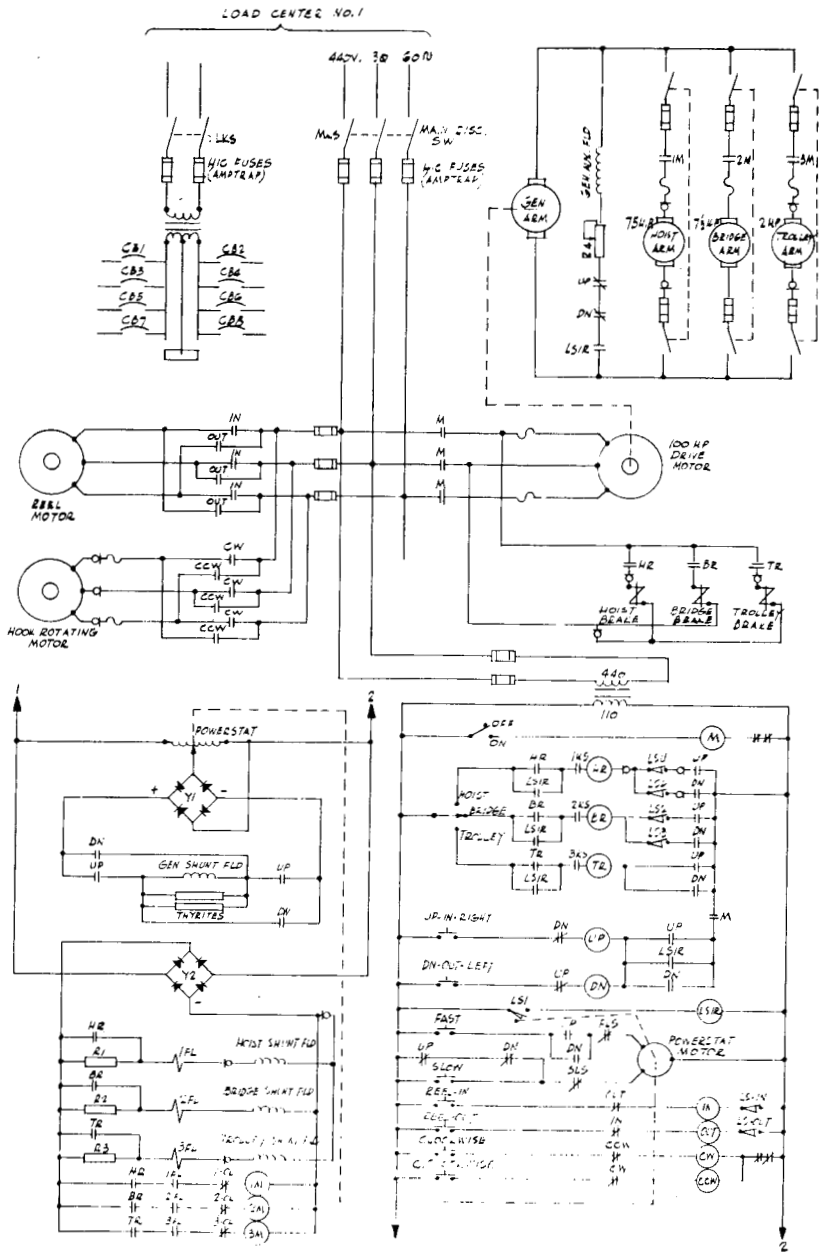

Ref. Dwg. Rundel R-1980-14D
PACECO 227-3-2D

Fig. 909-2 Schematic wiring diagram of controls for building crane.

910. BUILDING SPRAY SYSTEM

A. Internal Building Spray

The function of the internal spray system is the reduction of the building pressure following an accident involving the uncontrolled release of steam into the building space from a break in the reactor and/or power plant systems. Although the containment building is designed to safely resist the pressures that can result, the rapid reduction of the pressure by the quenching action of the spray system will reduce the total amount of the radioactive contaminants that can leak to the outside due to the resulting lower pressure level and also by the scrubbing action of the water spray which will retain a large fraction of the water-soluble iodine vapor. The internal building spray system is designed to discharge the spray water at a rate of 1000 gpm, which flow rate will reduce the building pressure following the maximum credible accident from 4.3 psig to 2.4 psig within 50 minutes.

The spray piping system is installed above and below the main floor level. The supply and distribution network is fabricated from A-53 Gr B carbon steel pipe, Schedule 80 for 2 in. and smaller and Schedule 40 for 2-1/2 in. and larger sizes. At the top of the building, approximately 12 ft below the dome top, a network of 12 radial pipes containing pendant-type sprinkler heads extend from a central supply header and provides general spray coverage on the reactor floor (68 ft, 0 in.) and main floor (37 ft, 4 in.) levels. A supplementary sprinkler header located directly above the aisle space outside the offices on each side of the entrance air lock is installed to provide a local concentrated water shower path for the protection of the operating staff escaping from the building by way of the entrance air lock during such an accident. The sprinkler heads are Grinnell D3, 125° Protectospray, open, water fog pendant head type without fusible link. Above the main floor level each head is rated at 15 gpm. Fifty-one (51) units provide a flow capacity of 765 gpm.

Figure 910-1 shows the routing and details of the spray piping system and Fig. 910-2 shows schematically the interconnection of the internal building spray system with the external spray and the valving controlling the operation of both systems.

Below the main floor level a similar type ring header provides spray coverage above the basement floor access aisle space to quench any steam escaping from the shielded compartments housing reactor auxiliary and plant equipment containing pressurized steam or water. Local sprinklers are installed in the feedwater heater, reactor purification pump/startup heater, and condenser, shielded compartments to directly quench the steam released from equipment and pipe lines in these areas. Twenty-five (25) sprinkler heads, each rated at 10 gpm, provide a total spray capacity of 250 gpm below the main floor level.

The actuation of the building spray system is initiated by the opening of a 12-in. d-c motor-operated gate valve installed adjacent to the entrance building "pillbox." The valve can be operated either manually-electrically from the control room, or hand-operated at the pillbox station, or automatically if the building pressure exceeds 3 psig. The control circuitry for the building spray motor-operated valve in the line to the four 25,000 gallon external water storage tanks at grade elevation 174 ft, is shown on Fig. 910-3. The gravity flow of water to the system from the elevated tanks is initiated on the opening of this valve. In the event of failure of the 125-volt d-c station battery power source or the valve motor, the valve is also capable of being manually operated through a shaft extension from the entrance building pillbox — the remote reactor shutdown station. In the remote event of an accident requiring the use of the building spray system, which will in itself result in a power loss to the plant electrical components by the water spray, the operation of the building spray valve must be controlled such that the building pressure is reduced without exhausting the water storage supply which is also required for the reactor core spray. Under such an emergency catastrophy the manual control of the building spray from the pillbox should be full closure of the valve when the building pressure, indicated on the pillbox panel gage is 3 psig. This should be done to conserve water for the core spray system described in Section 411.

Electrically the building spray valve can be operated by three control methods.

1. Manual-electric from the control room by actuation of the spray valve control switch. When this switch is operated the valve will take a position depending on the time that the operator holds the switch in the open or closed position; on release of the control switch handle the motor operator will automatically stop the valve motion.

2. Automatic-electric from the control room by the operator actuating the emergency push bar or the spray valve push button located under a glass cover on the reactor console section (H) of the control panel. The operation of the emergency push bar or push button switch sets up the valve control for automatic pressure control; if the building pressure exceeds 3 psig by closure of pressure switches the valve automatically goes to the full open position, or any open position below full open as long as the building pressure is above 2.5 psig, the set pressure at which the pressure switch contacts open. The spray valve will stay in the open position if no steps are taken to close the valve. Closure of the valve electrically can be accomplished only from the control room by maintaining the control switch in the closed position until the valve fully seats; however, the valve will automatically reopen if the pressure again reaches the 3 psig level. A key operated by-pass switch

located on the pillbox control panel, which opens the motor control circuit, is provided to permit transfer of valve control electrically from the control room to manual control in the pillbox station. Operation of the key operated by-pass switch is automatically annunciated in the control room to advise the operators of the intended or accidental transfer and loss of valve control from the control room. In addition audible and visual annunciation results any time the valve is off its fully closed position.

B. External Building Spray System

The external building spray can be used for limited cooling of the containment building in situations where it is undesirable to spray the interior of the building. In case of a major accident it can be used for periodic cooling of the shell over an extended period of time to keep the building pressure low after the initial pressure reduction has been accomplished by using the interior spray. This manually-operated back-up system, by keeping the building shell cool, will absorb the decay heat from the fuel elements inside the building and will minimize daily pressure fluctuations due to variations in atmospheric air temperatures and solar heat loads.

This spray system consists of two circular ring headers which are perforated at regular intervals and are mounted on the building at elevation 107 ft, 3-1/2 in. and elevation 123 ft, 10 in. These ring headers are connected to a 4-inch supply line at azimuth 192° which is in turn connected to the 12-inch emergency water supply header. The total design flow of water to the two headers is 450 gpm, which is the minimum rate needed to assure thorough wetting of the building surface. The spray is manually controlled from the pillbox by means of a valve shaft extension connected to a 4-inch gate valve in the valve pit outside. Building pressure is indicated in the pillbox thus allowing an operator to decide when cooling water is necessary.

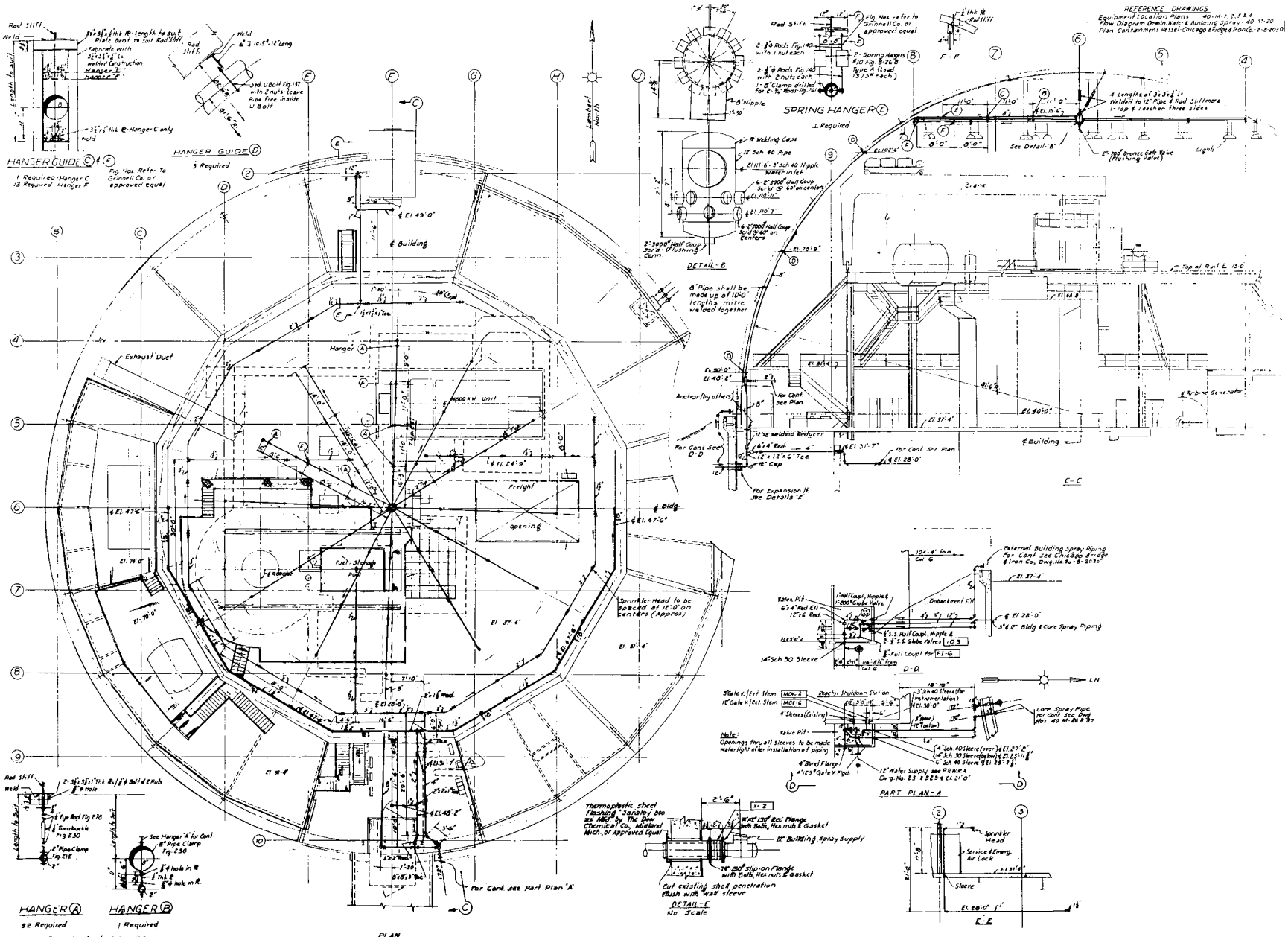

Ref. Dwg. J&M 40-M-76 Rev. 4

Fig. 910-1 Internal building spray piping system.

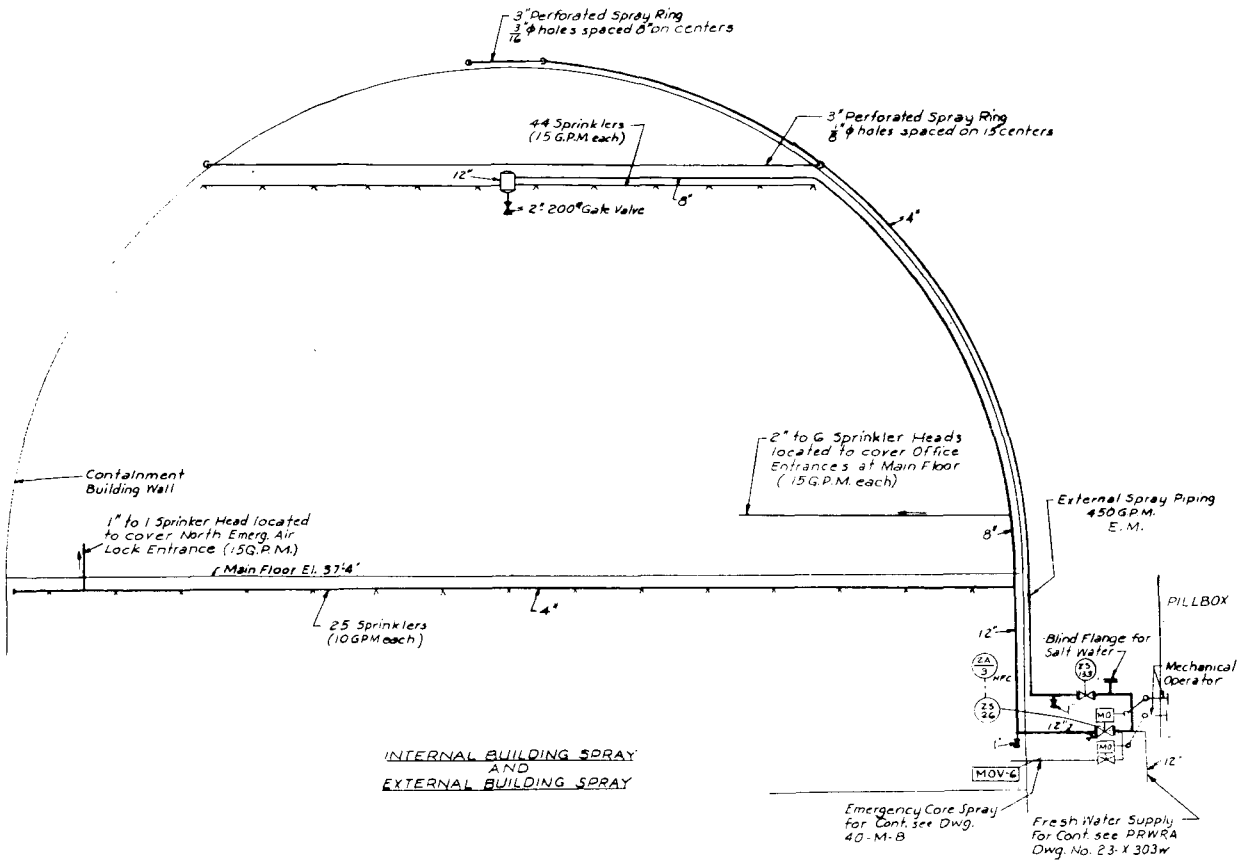

Ref. Dwg. J&M 40-M-20 Rev. 4

Fig. 910-2 Flow diagram of building spray systems.

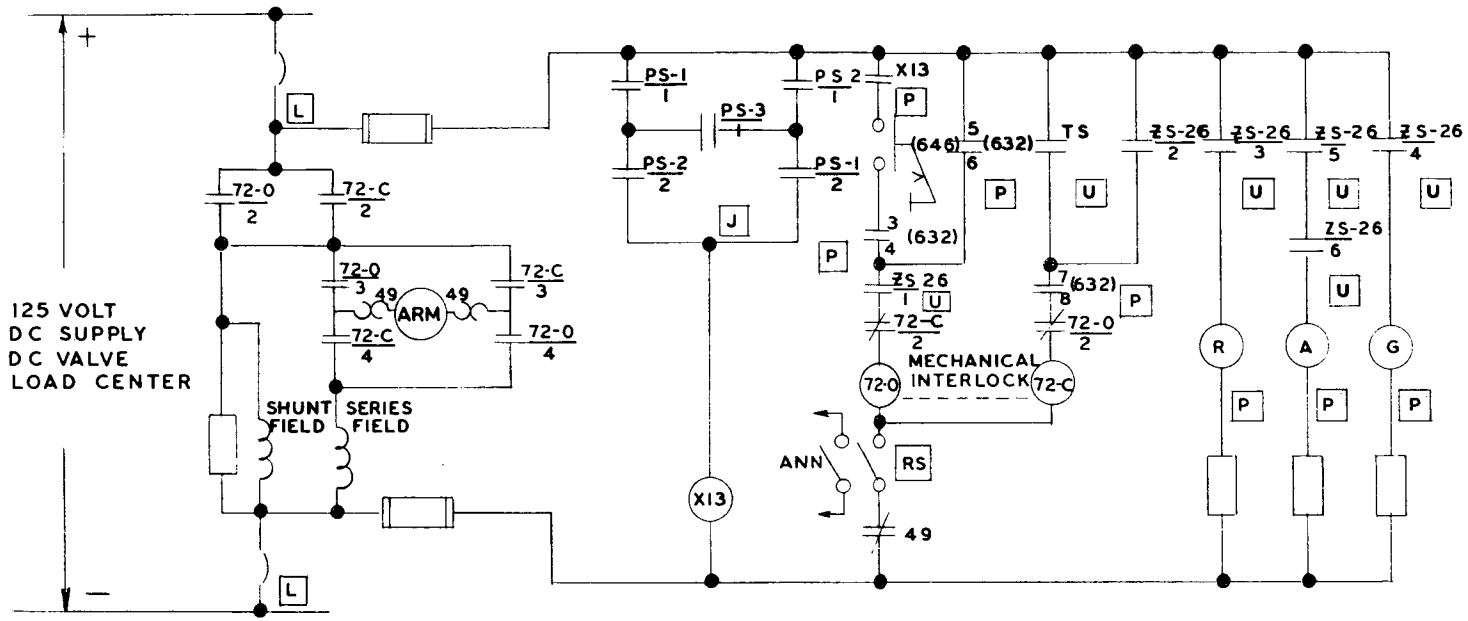

BUILDING SPRAY VALVE MOV-6

POSITION SWITCH DEVELOPEMENT

CONTACT	VALVE POSITION		
	FULLY OPEN	INTER	FULLY CLOSED
1		X	X
2	X	X	
3	X		
4			X
5		X	X
6	X	X	
7	X		
8			X
9	X	X	
10		X	X

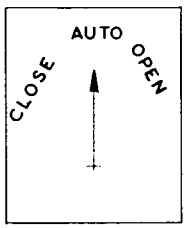

NAME PLATE FRONT VIEW

CONTROL SWITCH DEVELOPEMENT

CONTACTS	POSITIONS		
	OPEN	AUTO	CLOSE
1 – 2	X		
3 – 4		X	
5 – 6	X		
7 – 8			X

SPRING RETURN TO AUTO
"X" INDICATES CONTACTS CLOSED

LEGEND

72-0 - MOTOR OPEN STARTER
72-C - MOTOR CLOSE STARTER
49 - THERMAL OVERLOAD
ZS - POSITION SWITCH
TS - TORQUE SWITCH
632 - MOV-6 CONTROL SWITCH
646 - MOV-6 EMERGENCY SWITCH
[P] - MAIN PANEL LOCATION
[U] - VALVE LOCATION
[L] - LOAD CENTER LOCATION
[J] - BUILDING WALL LOCATION
X 13 - AUXILIARY RELAY
[RS] - PILLBOX LOCATION
PS - BUILDING PRESSURE SWITCH

40-E-6 REV. 3

Fig. 910-3 Schematic electric circuitry for building spray valve.

911. FIRE PROTECTION

A. Automatic Spray System

To protect the building and equipment from fire damage, a separate wet pipe, automatic sprinkler fire protection system, designed in accordance with Factory Mutual standards for "improved risk," is installed in the BONUS building. Since the main source for the origin of a fire in any power plant is the combustible oil in the turbine generator and auxiliary equipment lubrication systems, the fusible link sprinklers are located directly above those equipment items and beyond where oil leaks could spread. A curved supply header anchored to the building shell within 6 ft of the dome top, with a series of smaller parallel headers containing the sprinkler heads, supplies protection to the building steel from a major fire in the turbine lubrication system below. Below the main floor level a distribution sprinkler network extends into all those compartments containing force-feed lubricated auxiliaries or into compartments where oil can leak from a broken line. The opening of any sprinkler during a fire is automatically annunciated by the opening of the water flow alarm check valve in the supply riser outside the containment building. Figures 911-1, 911-2, and 911-3 show details of the fire protection system. The temperature at which the majority of the Grinnell Model SSU-2 type sprinklers actuate is 286°F; four higher temperature sprinklers set for 350°F are installed in the reactor circulating pump room and two 500°F sprinkler heads are mounted to the ceiling of the fixed shield at the turbine front standard.

The source of water for fire fighting within the containment building is the four 25,000 gallon tanks mounted on high ground at 174 ft elevation. The external water storage and supply piping system is shown schematically in Fig. 1101-2 and the system is described in section 1101-D. The site storage capacity for the building automatic sprinkler system has been selected by Factory Mutual at 90,000 gallons which permits a flow rate of 750 gpm for two hours. The sprinklers are designed to release water at a flow rate of 20 gpm from each of the 37 highest sprinkler heads with the building at 5 psig pressure.

B. Hose System

In addition to the sprinkler protection system, two hose racks, containing 100 ft of 1-1/2 in. dia. hose each, are provided in the basement, one on the wall outside of the building exhaust fan room and the other outside of the intake fan room. Two similar hose racks are provided on the main floor, one on the outside of the new fuel storage room, and the other one on the "Y" crane column at azimuth 75°, which is approximately 65 ft SE of the machine shop.

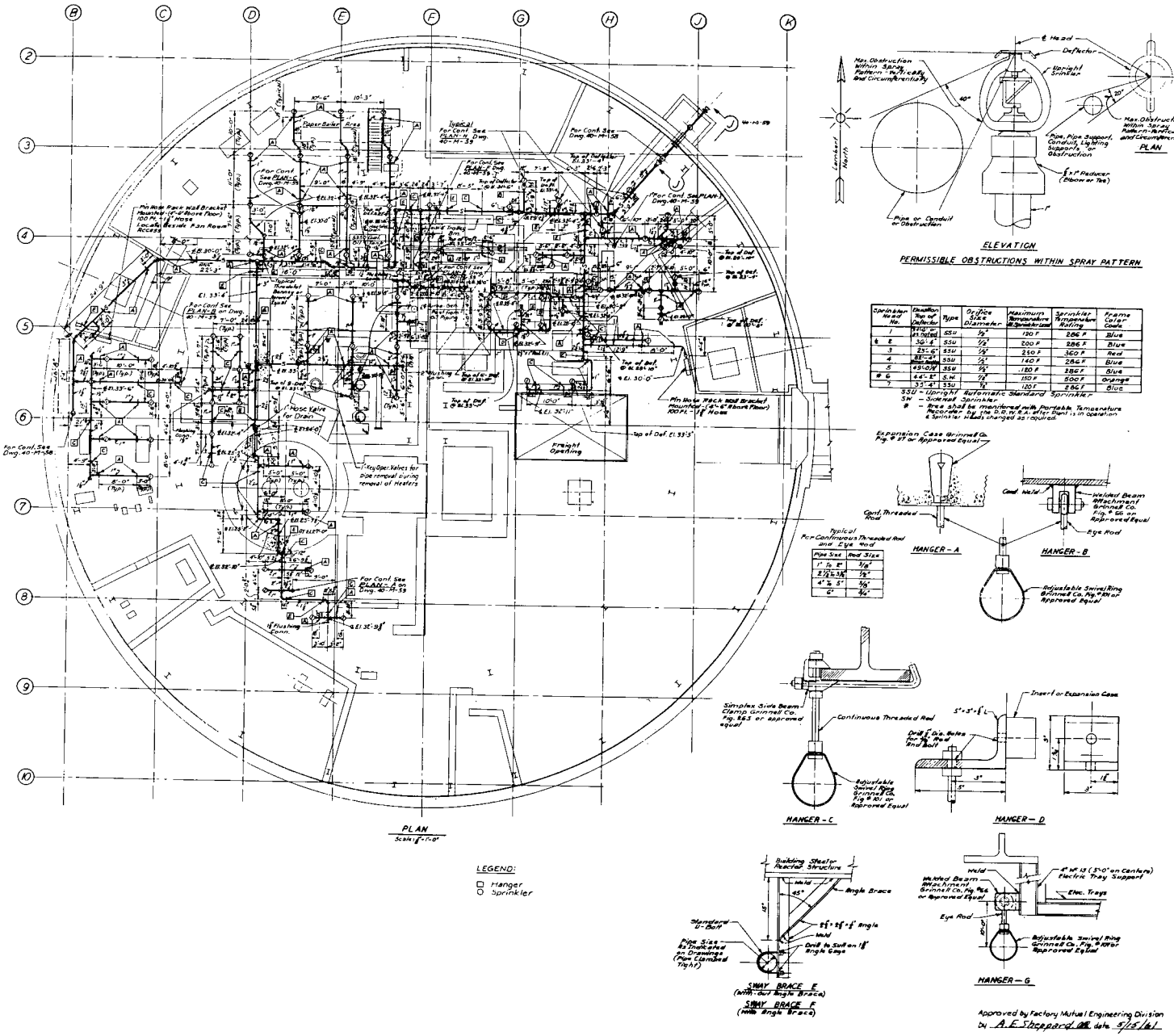

Ref. Dwg. J&M 40-M-57 Rev. 2

Fig. 911-1 Fire protection system details - sheet 1.

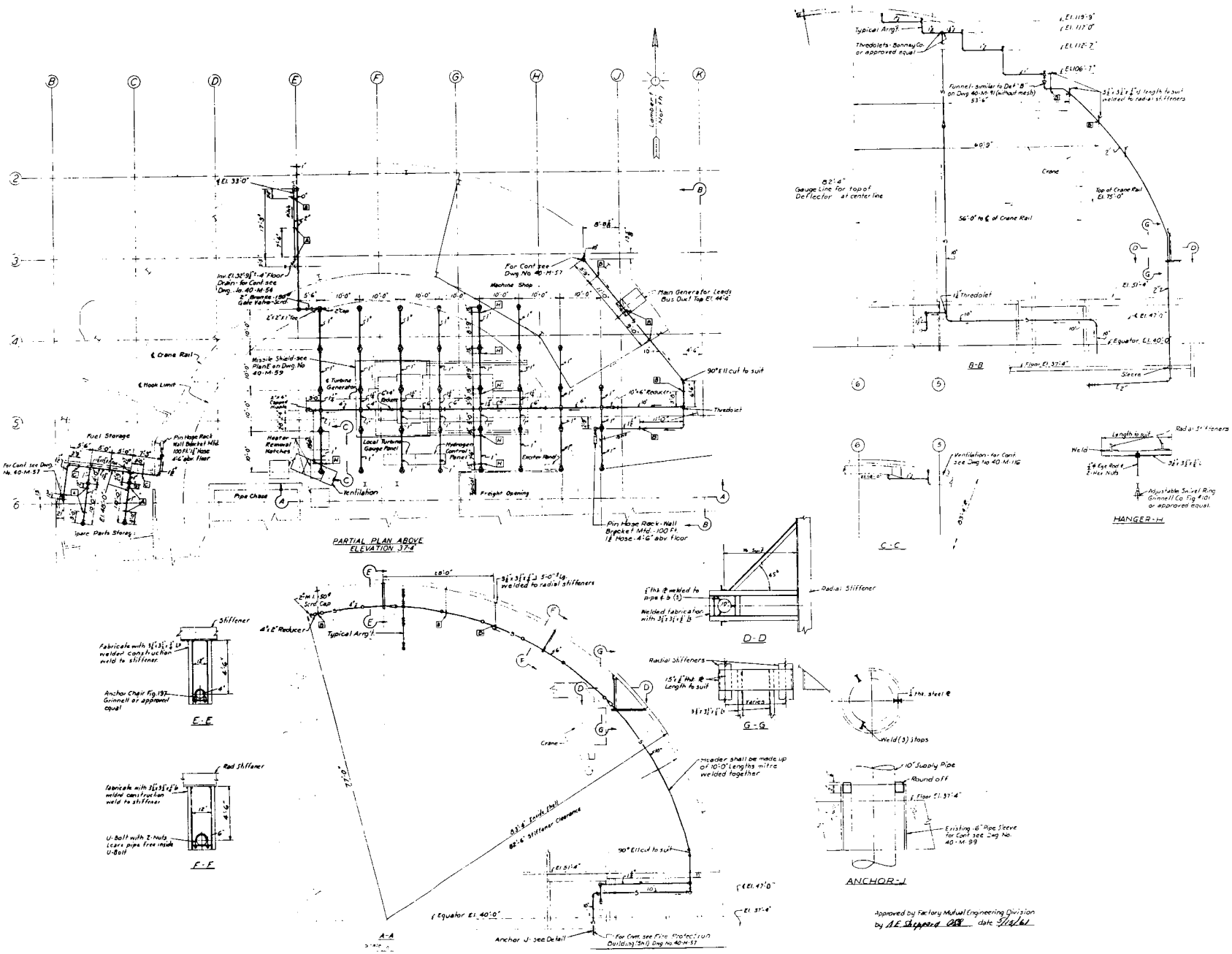

Ref. Dwg. J&M 40-M-58

Fig. 911-2 Fire protection system details - sheet 2.

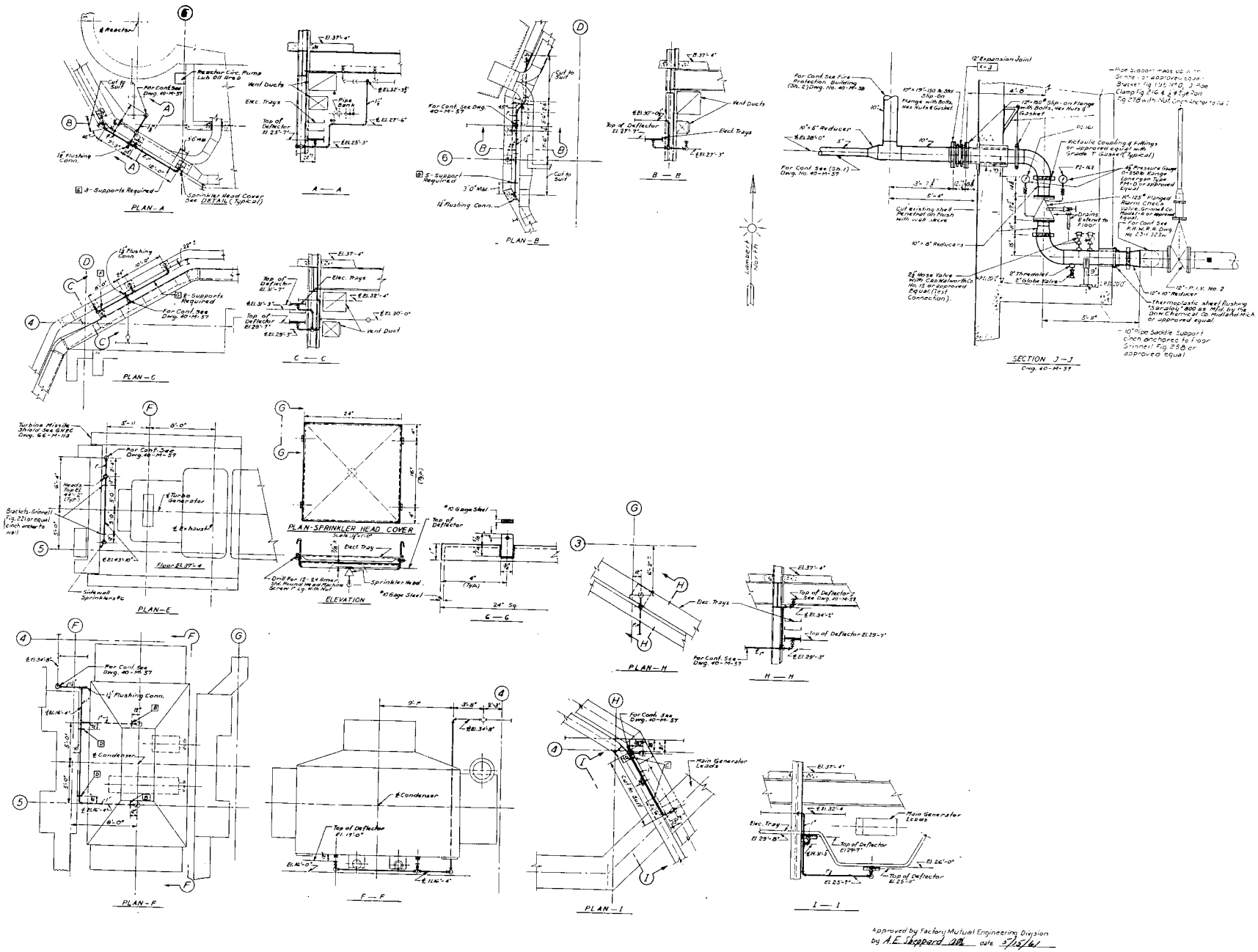

Reg. Dwg. J&M 40-M-59 Rev. 1

Fig. 911-3 Fire protection system details - sheet 3.

912. LIGHTING

Ceiling-suspended, semi-direct, fluorescent lighting fixtures are used in the entrance building offices and the offices, control room, laboratory, parts storage room, fuel storage room, electrical maintenance shop, and machine shop within the containment building. Pendant-type incandenscent lamp fixtures are used for lighting of the electrical equipment, dry storage, service rooms, and general areas.

Emergency lighting powered by the emergency diesel will provide sufficient illumination throughout the entrance building and reactor building to permit personnel to perform emergency duties. As an additional safety feature, battery-powered portable lamps are located near each stairway, entrance and emergency air locks, control room, basement area, operating floor, and entrance building. Thirteen (13) lighting fixtures in the control room are equipped with a single incandescent lamp operated from the station battery during a-c power failure. During the 15 second interval required for the diesel to start and assume the load, the emergency d-c lighting will automatically be turned on. Resumption of the a-c power will automatically turn off the d-c lights. Lighting fixture locations are shown on Table 912-1, Fig. 912-1 and Fig. 912-2.

Table 912-1 CONTAINMENT BUILDING LIGHTING CIRCUITS

A. Lighting Cabinet No. 1:
   1. Location: (El. 19 ft, 0 in.) (F.O. - 2.5)*
   2. Circuit Breakers:
      a. Main Circuit Breaker, controls power to the branch circuits supplied by Lighting Cabinet No. 1.
      b. Branch Circuit Breakers, control power to the lighting branches. The breakers, switches, and fixtures associated with Cabinet No. 1 are listed below:

Bkr. 1 (1-1-C) Load: Five Type C1 Fixtures (El. 25 ft, 0 in.), 1500 watts total.**

Sw. 1-1-1-AU (F.0 - 2.0)
Fixt: 1-1-1-C1 (F.2 - 2.2)
1-1-1-C1 (G.3 - 2.4)
1-1-1-C1 (F.8 - 2.8)

Sw. 1-1-2-AU (G.8 - 3.3)
Fixt: 1-1-2-C1 (G.8 - 2.7)
1-1-2-C1 (H.0 - 3.2)

Bkr. 2 (1-2-C) Load: One Type B1 Fixture (El. 34 ft, 0 in.); Three Type C1 Fixtures (El. 25 ft, 0 in.), 1100 watts total.

Fixt: 1-2-C-B1 (E.4 - 2.6)
1-2-C-C1 (E.9 - 2.8)
1-2-C-C1 (E.4 - 2.9)
1-2-C-C1 (E.2 - 2.3)

Bkr. 3 (1-3-C) Load: Five Type C1 Fixtures (El. 25 ft, 0 in.), 1500 watts total.

Sw. 1-3-1-AU (F.0 - 2.2)
Fixt: 1-3-1-C1 (F.8 - 2.2)
1-3-1-C1 (F.2 - 2.8)
1-3-1-C1 (G.1 - 2.9)

Sw. 1-3-2-AU (G.9 - 3.3)
Fixt: 1-3-2-C1 (G.6 - 3.0)
1-3-2-C1 (H.2 - 2.9)

---

* Building grid coordinates, see Figs. 912-1 and 912-2 or J&M Drawings 40-E-24 and 40-E-25.

** For explanation of numbering code used in this table see Fig. 912-2.

Table 912-1 (Continued)

Bkr. 4 (1-4-C) Load: Four Type C1 Fixtures (El. 25 ft, 0 in.), 1200 watts total.
Sw. 1-4-C (F.0 - 2.5)
Fixt: 1-4-C-C1 (D.6 - 2.2)
1-4-C-C1 (D.8 - 2.3)
1-4-C-C1 (D.5 - 3.1)
1-4-C-C1 (D.9 - 2.9)

Bkr. 5 (1-5-C) Load: Four Type C1 Fixtures (El. 25 ft, 0 in.), 1200 watts total.
Sw. 1-5-C (F.0 - 2.5)
Fixt: 1-5-C-C1 (H.2 - 3.6)
1-5-C-C1 (H.6 - 3.2)
1-5-C-C1 (H.5 - 3.9)
1-5-C-C1 (H.9 - 3.5)

Bkr. 6 (1-6-C) Load: Four Type C1 Fixtures (El. 25 ft, 0 in.), 1200 watts total.
Sw. 1-6-C (F.0 - 2.5)
Fixt: 1-6-C-C1 (C.9 - 2.8)
1-6-C-C1 (C.5 - 3.2)
1-6-C-C1 (D.2 - 3.4)
1-6-C-C1 (C.9 - 3.6)

Bkr. 7 (1-7-C) Load: Four Type C1 Fixtures (El. 25 ft, 8 in.), 1200 watts total.
Sw. 1-7-1-AS (J.2 - 4.7)
Fixt: 1-7-1-C1 (H.9 - 4.2)
1-7-1-C1 (J.3 - 4.0)
1-7-1-C1 (J.6 - 4.4)
1-7-1-C1 (J.1 - 4.6)

Bkr. 8 (1-8-C) Load: Four Type C1 Fixtures (El. 25 ft, 0 in.), 1200 watts total.
Sw. 1-8-C (F.0 - 2.5)
Fixt: 1-8-C-C1 (C.1 - 3.4)
1-8-C-C1 (C.6 - 3.8)
1-8-C-C1 (C.3 - 4.2)
1-8-C-C1 (B.8 - 3.8)

Bkr. 9 (1-9-C) Load: Four Type C1 Fixtures (El. 25 ft, 0 in.), 1200 watts total.
Sw. 1-9-1-AS (J.0 - 5.2)
Fixt: 1-9-1-C1 (J.2 - 5.0)
1-9-1-C1 (J.7 - 4.9)
1-9-1-C1 (J.8 - 5.5)
1-9-1-C1 (J.5 - 5.5)

Bkr. 10 (1-10-C) Load: Four Type B1 Fixtures (El. 25 ft, 0 in.); Two Type B1 Fixtures (El. 23 ft, 6 in.), 1200 watts total.

Sw. 1-10-1-AS (B.1 - 5.6)
Fixt: 1-10-1-B1 (B.6 - 4.2)
1-10-1-B1 (B.8 - 4.4)
1-10-1-B1 (B.6 - 4.9)
1-10-1-B1 (B.3 - 4.8)

Sw. 1-10-2-AS (B.8 - 5.2)
Fixt: 1-10-2-B1 (C.1 - 4.5)
1-10-2-B1 (B.9 - 5.0)

Bkr. 11 (1-11-C) Load: Four Type C1 Fixtures (El. 30 ft, 4 in.); Two Type S Fixtures (El. 30 ft, 4 in.), 1400 watts total.

Sw. 1-11-C (F.0 - 2.5)
Fixt: 1-11-C-C1 (J.2 - 5.8)
1-11-C-C1 (J.8 - 5.8)
1-11-C-C1 (J.8 - 6.2)
1-11-C-C1 (J.2 - 6.2)

Sw. 1-11-1-AS (J.9 - 5.6)
Fixt: 1-11-1-S (K.2 - 5.8)
1-11-1-S (K.2 - 6.2)

Bkr. 12 (1-12-C) Load: Four Type C1 Fixtures (El. 25 ft, 0 in.), 1200 watts total.

Sw. 1-12-C (F.0 - 2.5)
Fixt: 1-12-C-C1 (B.3 - 5.3)
1-12-C-C1 (B.8 - 5.4)
1-12-C-C1 (B.8 - 5.8)
1-12-C-C1 (B.2 - 5.7)

Bkr. 13 (1-13-C) Load: Two Type B1 Fixtures (El. 23 ft, 6 in.); Two Type B1 Fixtures (El. 25 ft, 0 in.); One Type C1 Fixture (El. _____); Three Type S1 Fixtures (El. 22 ft, 5 in.), 1400 watts total.

Sw. 1-13-1-AU (G.8 - 4.6)
Fixt: 1-13-1-B1 (G.0 - 4.8)
1-13-1-B1 ( )
1-13-1-S1 (G.6 - 3.9)
1-13-1-S1 (G.2 - 4.2)
1-13-1-S1 (F.8 - 4.8)

Sw. 1-13-2-AU (F.9 - 5.9)
Fixt: 1-13-2-B1 (F.7 - 5.5)
1-13-2-B1 (G.7 - 5.3)

Sw. 1-13-____ ( )
Fixt: 1-13- -C1 ( )

Table 912-1 (Continued)

Bkr. 14 (1-14-C) Load: One Type C Fixture (El. 27 ft, 6 in.); Two Type C1 Fixtures (El. 25 ft, 0 in.); Two Type S1 Fixtures (El. 32 ft, 0 in.), 1100 watts total.

Sw. 1-14-1 (D.1 - 4.8)
Fixt: 1-14-1-C (E.2 - 5.4)
1-14-1-C1 (E.7 - 5.9)
1-14-1-C1 (D.4 - 4.8)
1-14-1-S1 (E.7 - 4.5)
1-14-1-S1 ( )

Bkr. 15 (1-15-C) Load: Three Type B1 Fixtures (El. 25 ft, 0 in.); Two Type B1 Fixtures (El. 23 ft, 6 in.); One Type S1 Fixture (El. 23 ft, 6 in.); Two Type S1 Fixtures (El. 22 ft, 5 in.), 1400 watts total.

Sw. 1-15-1-AU (G.8 - 4.6)
Fixt: 1-15-1-B1 (G.2 - 4.7)
1-15-1-B1 (H.0 - 5.1)
1-15-1-S1 (G.3 - 3.9)
1-15-1-S1 (G.6 - 4.3)
1-15-1-S1 (G.7 - 4.8)

Sw. 1-15-2-AU (F.9 - 5.9)
Fixt: 1-15-2-B1 (F.2 - 5.5)
1-15-2-B1 (F.9 - 5.7)
1-15-2-B1 (G.1 - 5.4)

Bkr. 16 (1-16-C) Load: Three Type C1 Fixtures (El. 25 ft, 0 in.); One Type C1 Fixture (El. 27 ft, 6 in.), 1200 watts total.

Sw. 1-16-1-AU (D.1 - 4.8)
Fixt: 1-16-1-C1 (E.1 - 4.8)
1-16-1-C1 (E.7 - 5.3)
1-16-1-C1 (D.4 - 5.3)
1-16-1-C1 (E.2 - 5.8)

Bkr. 17 (1-17-C) Load: Two Type C1 Fixtures (El. 30 ft, 4 in.); Two Type C1 Fixtures (El. 25 ft, 0 in.); 1200 watts total.

Sw. 1-17-C (F.0 - 2.5)
Fixt: 1-17-C-C1 (H.6 - 6.4)
1-17-C-C1 (H.6 - 5.6)
1-17-C-C1 (H.1 - 4.4)
1-17-C-C1 ( )

Table 912-1 (Continued)

Bkr. 18 (1-18-C) Load: Four Type C1 Fixtures (El. 25 ft, 0 in.), 1200 watts total.

Sw. 1-18-C (F.0 - 2.5)
Fixt: 1-18-C-C1 (C.4 - 5.8)
1-18-C-C1 (D.0 - 5.8)
1-18-C-C1 (D.5 - 4.0)
1-18-C-C1 (E.0 - 4.0)

Bkr. 19 (1-19-C) Load: Four Type C1 Fixtures (El. 25 ft, 0 in.), 1200 watts total.

Sw. 1-19-C (F.0 - 2.5)
Fixt: 1-19-C-C1 (E.7 - 4.0)
1-19-C-C1 (E.0 - 3.6)
1-19-C-C1 (F.4 - 3.3)
1-19-C-C1 (F.9 - 3.5)

Bkr. 20 (1-20-C) (Spare Breaker)

Bkr. 21 (1-20-0) Load: Six Duplex Receptacles, Rated Load 500 watts total.
Fixt: 1-21-0-AA (G.0 - 2.2)
1-21-0-AA (H.0 - 2.6)
1-21-0-AA (H.8 - 3.2)
1-21-0-AA (J.4 - 4.0)
1-21-0-AA (H.0 - 4.0)
1-21-0-AA (F.8 - 3.2)

Bkr. 22 (1-22-0) Load: Nine Duplex Receptacles, Rated Load 500 watts total.
Fixt: 1-22-0-AA (F.0 - 2.0)
1-22-0-AA (E.2 - 3.2)
1-22-0-AA (E.0 - 2.2)
1-22-0-AA (E.0 - 4.5)
1-22-0-AA (E.9 - 5.7)
1-22-0-AA (E.0 - 5.4)
1-22-0-AA (D.0 - 2.5)
1-22-0-AA (D.0 - 4.0)
1-22-0-AA (C.2 - 3.2)

Bkr. 23 (1-23-0) Load: Nine Duplex Receptacles, Rated Load 500 watts total.
Fixt: 1-23-0-AA (G.5 - 4.3)
1-23-0-AA (G.3 - 4.5)
1-23-0-AA (H.8 - 4.4)
1-23-0-AA (G.7 - 5.0)
1-23-0-AA (H.7 - 5.3)
1-23-0-AA (G.7 - 5.5)
1-23-0-AA (F.4 - 5.5)
1-23-0-AA (J.4 - 5.6)
1-23-0-AA (J.8 - 5.0)

Bkr. 24 (1-24-0) Load: Seven Duplex Receptacles, Rated Load 500 watts total.
Fixt: 1-24-0-AA (B.7 - 4.2)
1-24-0-AA (B.4 - 4.9)
1-24-0-AA (B.8 - 5.0)
1-24-0-AA (B.1 - 5.1)
1-24-0-AA (B.0 - 6.0)
1-24-0-AA (C.3 - 5.3)
1-24-0-AA (B.6 - 3.9)

Bkr. 25 (Spare Breaker)

Bkr. 26 (Spare Breaker)

Bkr. 27 (Spare Breaker)

Bkr. 28 (Spare Breaker)

Bkr. 29 (Spare Breaker)

Bkr. 30 (Spare Breaker)

B. Lighting Cabinet No. 2:
1. Location: (El. 19 ft, 0 in.) (E.2 - 9.3)
2. Circuit Breakers:
a. Main circuit breakers, controls power to the branch circuits supplied by Lighting Cabinet No. 2.
b. Branch circuit breakers, controls power to the lighting branches. The breakers, switches, and fixtures associated with Cabinet No. 2 are listed below:

Bkr. 1 (2-1-C) Load: Four Type C1 Fixtures (El. 25 ft, 0 in.), 1200 watts total.
Sw. 2-1-1-AS (F.5 - 8.8)
Fixt: 2-1-1-C1 (F.6 - 9.0)
2-1-1-C1 (F.5 - 9.4)
2-1-1-C1 (F.8 - 9.7)
2-1-1-C1 (F.4 - 9.9)

Bkr. 2 (2-2-C) Load: Three Type C1 Fixtures (El. 25 ft, 0 in.), 900 watts total.
Sw. 2-2-C (E.2 - 9.3)
Fixt: 2-2-C-C1 (F.0 - 9.6)
2-2-C-C1 (E.7 - 9.9)
2-2-C-C1 (E.3 - 9.7)

Table 912-1 (Continued)

Bkr. 3 (2-3-C) Load: Four Type C1 Fixtures (El. 25 ft, 8 in.), 1200 watts total.
Sw. 2-3-1-AU (H.0 - 8.2)
2-3-1-C1 (G.4 - 8.8)
2-3-1-C1 (G.7 - 9.4)
2-3-1-C1 (G.3 - 9.6)
2-3-1-C1 (G.0 - 9.0)

Bkr. 4 (2-4-C) Load: Three Type B1 Fixtures (El. 25 ft, 0 in.); Two Type C1 Fixtures (El. 25 ft, 0 in.), 1200 watts total.
Sw. 2-4-1-AU (C.8 - 7.8)
Fixt: 2-4-1-B1 (C.7 - 9.2)
2-4-1-B1 (D.3 - 9.5)
2-4-1-B1 (D.8 - 9.7)
2-4-1-C1 (E.0 - 9.1)
2-4-1-C1 (D.6 - 8.8)

Bkr. 5 (2-5-C) Load: Four Type C1 Fixtures (El. 25 ft, 8 in.), 1200 watts total.
Sw. 2-5-1-AU (H.0 - 8.2)
Fixt: 2-5-1-C1 (H.1 - 8.4)
2-5-1-C1 (H.5 - 8.8)
2-5-1-C1 (H.2 - 9.3)
2-5-1-C1 (G.8 - 8.7)

Bkr. 6 (2-6-C) Load: One Type B1 Fixture (El. 25 ft, 0 in.); Three Type C1 Fixtures (El. 25 ft, 0 in.); 1100 watts total.
Sw. 2-6-1-AU (C.8 - 7.8)
Fixt: 2-6-1-B1 (C.5 - 8.1)
2-6-1-C1 (C.2 - 8.5)
2-6-1-C1 (C.8 - 8.4)
2-6-1-C1 (D.2 - 8.7)

Bkr. 7 (2-7-C) Load: Four Type C1 Fixtures (El. 30 ft, 4 in.), 1200 watts total.
Sw. 2-7-C (E.2 - 9.3)
Fixt: 2-7-C-C1 (J.2 - 6.6)
2-7-C-C1 (J.8 - 6.8)
2-7-C-C1 (J.7 - 7.3)
2-7-C-C1 (J.0 - 7.0)

Bkr. 8 (2-8-C) Load: Four Type C1 Fixtures (El. 25 ft, 0 in.), 1200 watts total.
Sw. 2-8-C (E.2 - 9.3)
Fixt: 2-8-C-C1 (B.7 - 6.2)
2-8-C-C1 (B.8 - 6.6)
2-8-C-C1 (B.3 - 6.7)
2-8-C-C1 (B.2 - 6.3)

Table 912-1 (Continued)

Bkr. 9 (2-9-C) Load: Three Type C1 Fixtures (El. 25 ft, 8 in.), 900 watts total.
Sw. 2-9-1-AU (H.7 - 7.2)
Fixt: 2-9-1-C1 (H.8 - 7.4)
2-9-1-C1 (J.5 - 7.5)
2-9-1-C1 (J.2 - 8.1)

Bkr. 10 (2-10-C) Load: Four Type C1 Fixtures (El. 25 ft, 0 in.), 1200 watts total.
Sw. 2-10-C (E.2 - 9.3)
Fixt: 2-10-C-C1 (B.9 - 7.0)
2-10-C-C1 (C.1 - 7.3)
2-10-C-C1 (B.5 - 7.5)
2-10-C-C1 (B.4 - 7.2)

Bkr. 11 (2-11-C) Load: Three Type C1 Fixtures (El. 25 ft, 8 in.), 900 watts total.
Sw. 2-11-1-AU (H.7 - 7.2)
Fixt: 2-11-1-C1 (H.6 - 7.7)
2-11-1-C1 (H.4 - 8.2)
2-11-1-C1 (H.8 - 8.5)

Bkr. 12 (2-12-C) Load: Three Type C1 Fixtures (El. 25 ft, 0 in.), 900 watts total.
Sw. 2-12-1-AS (B.8 - 7.7)
Fixt: 2-12-1-C1 (B.9 - 7.7)
2-12-1-C1 (C.3 - 7.7)
2-12-1-C1 (B.9 - 8.2)

Bkr. 13 (2-13-C) Load: Five Type B1 Fixtures (El. 25 ft, 0 in.), 1000 watts total.
Sw. 2-13-C (E.2 - 9.3)
Fixt: 2-13-C-B1 (F.2 - 7.4)
2-13-C-B1 (F.6 - 7.4)
2-13-C-B1 (G.0 - 7.4)
2-13-C-B1 (F.4 - 7.7)
2-13-C-B1 (F.4 - 8.2)

Bkr. 14 (2-14-C) Load: Four Type C1 Fixtures (El. 25 ft, 0 in.), 1200 watts total.
Sw. 2-14-C (E.2 - 9.3)
Fixt: 2-14-C-C1 (D.9 - 7.6)
2-14-C-C1 (E.0 - 8.4)
2-14-C-C1 (D.5 - 8.2)
2-14-C-C1 (C.6 - 7.0)

Table 912-1 (Continued)

Bkr. 15 (2-15-C) Load: Five Type B1 Fixtures (El. 25 ft, 0 in.), 1300 watts total.

Sw. 2-15-C (E.2 - 9.3)
Fixt: 2-15-C-B1 (G.2 - 7.8)
2-15-C-B1 (G.7 - 7.5)
2-15-C-B1 (G.3 - 7.0)
2-15-C-B1 (G.3 - 6.6)

Bkr. 16 (2-16-C) Load: Three Type C1 Fixtures (El. 25 ft, 0 in.); Two Type S1 Fixtures (El. 18 ft, 10 in.), 1100 watts total.

Sw. 2-16-C (E.2 - 9.3)
Fixt: 2-16-C-C1 (C.4 - 6.3)

Sw. 2-16-1-AS (E.6 - 8.2)
Fixt: 2-16-1-C1 (E.8 - 8.2)
2-16-1-C1 (E.6 - 7.3)

Sw. 2-16-2-AU (D.3 - 5.7)
Fixt: 2-16-2-S1 (C.9 - 6.6)
2-16-2-S1 (D.8 - 6.8)

Bkr. 17 (2-17-C) Load: Four Type C1 Fixtures (El. 25 ft, 0 in.), 1200 watts total.

Sw. 2-17-C (E.2 - 9.3)
Fixt: 2-17-C-C1 (F.4 - 8.6)
2-17-C-C1 (G.0 - 8.4)
2-17-C-C1 (G.6 - 8.1)
2-17-C-C1 (H.4 - 7.0)

Bkr. 18 (2-18-C) Load: Two Type C1 Fixtures (El. 25 ft, 0 in.); One Type S1 Fixture (El. 23 ft, 6 in.); Two Type S1 Fixtures (El. 18 ft, 10 in.), 900 watts total.

Sw. 2-18-1-AS (E.6 - 8.3)
Fixt: 2-18-1-C1 (E.6 - 6.6)
2-18-1-C1 (E.6 - 7.7)

Sw. 2-18-2-AU (D.3 - 5.7)
Fixt: 2-18-2-S1 (D.3 - 5.9)
2-18-2-S1 (D.4 - 6.3)
2-18-2-S1 (D.4 - 7.2)

Bkr. 19 (Spare Breaker)

Bkr. 20 (Spare Breaker)

Table 912-1 (Continued)

Bkr. 21 Load: Six Duplex Receptacles, Rated Load 500 watts total.

Fixt: 2-21-0-AA (F.3 - 9.3)
2-21-0-AA (F.4 - 9.7)
2-21-0-AA (F.7 - 8.7)
2-21-0-AA (F.5 - 7.7)
2-21-0-AA (G.3 - 7.3)
2-21-0-AA (H.0 - 9.5)

Bkr. 22 (2-22-0) Load: Eight Duplex Receptacles, Rated Load 500 watts total.

Fixt: 2-22-0-AA (E.2 - 9.6)
2-22-0-AA (E.3 - 8.6)
2-22-0-AA (E.8 - 7.8)
2-22-0-AA (E.4 - 6.6)
2-22-0-AA (D.0 - 9.5)
2-22-0-AA (D.4 - 8.6)
2-22-0-AA (D.0 - 8.0)
2-22-0-AA (C.1 - 8.8)

Bkr. 23 (2-23-0) Load: Eight Duplex Receptacles, Rated Load 500 watts total.

Fixt: 2-23-0-AA (G.9 - 7.9)
2-23-0-AA (H.1 - 8.1)
2-23-0-AA (H.7 - 8.7)
2-23-0-AA (J.4 - 8.0)
2-23-0-AA (G.7 - 6.4)
2-23-0-AA (H.7 - 6.7)
2-23-0-AA (J.8 - 7.0)
2-23-0-AA (J.4 - 5.6)

Bkr. 24 (2-24-0) Load: Seven Duplex Receptacles, Rated Load 500 watts total.

Fixt: 2-24-0-AA (B.5 - 8.0)
2-24-0-AA (C.3 - 7.4)
2-24-0-AA (D.2 - 7.2)
2-24-0-AA (B.2 - 7.0)
2-24-0-AA (C.3 - 6.7)
2-24-0-AA (D.4 - 6.2)
2-24-0-AA (D.3 - 5.5)

Bkr. 25 (Spare Breaker)

Bkr. 26 (2-26-C) Load: One Type B1 Fixture (El. 34 ft, 10 in.); Two Type C1 Fixtures (El. 25 ft, 0 in.), 800 watts total.

Sw. 2-26-C (E.2 - 9.3)
Fixt: 2-26-C-B1 (E.4 - 9.5)
2-26-C-C1 (F.0 - 9.2)
2-26-C-C1 (E.3 - 9.2)

Bkr. 27 (Spare Breaker)

Bkr. 28 (Spare Breaker)

Bkr. 29 (Spare Breaker)

Bkr. 30 (Spare Breaker)

C. Lighting Cabinet No. 3:
1. Location: (El. 40 ft, 4 in.) (F.8 - 2.8)
2. Circuit Breakers:
a. Main Breaker, controls power to the branch circuits supplied by Lighting Cabinet No. 1.
b. Branch Circuit Breakers, controls power to the lighting branches. The breakers, switches, and fixtures associated with Cabinet No. 3 are listed below:

Bkr. 1 (3-1-C) Load: Ten Type M Fixtures (El. 46 ft, 4 in.), 1000 watts total.
Sw. 3-1-1-AS (G.1 - 3.4)
Fixt: 3-1-1-M (G.1 - 2.8)
3-1-1-M (G.3 - 2.9)

Bkr. 2 (3-2-C) Load: Three Type C Fixtures (El. 46 ft, 4 in.), 900 watts total.
Sw. 3-2-C (F.8 - 2.8)
Fixt: 3-2-C-C (F.7 - 2.1)
3-2-C-C (F.3 - 2.4)
3-2-C-C (F.3 - 3.0)

Bkr. 3 (3-3-C) Load: Twelve Type M Fixtures (El. 46 ft, 4 in.), 1200 watts total.
Sw. 3-3-1-AU (G.7 - 3.7)
Fixt: 3-3-1-M (G.7 - 3.2)
3-3-1-M (H.2 - 3.4)
3-3-1-M (H.2 - 2.7)

Bkr. 4 (3-4-C) Load: Four Type C Fixtures (El. 46 ft, 4 in.), 1200 watts total.
Sw. 3-4-C (F.8 - 2.8)
Fixt: 3-4-C-C (E.3 - 2.0)
3-4-C-C (E.7 - 2.4)
3-4-C-C (E.6 - 3.0)
3-4-C-C (E.1 - 2.5)

Bkr. 5 (3-5-C) Load: Twelve Type M Fixtures (El. 46 ft, 4 in.), 1200 watts total.
Sw. 3-5-1-AU (G.8 - 3.8)
Fixt: 3-5-1-M (H.7 - 3.3)
3-5-1-M (H.4 - 3.7)
3-5-1-M (H.7 - 4.2)

Bkr. 6 (3-6-C) Load: Four Type C Fixtures (El. 46 ft, 4 in.), 1200 watts total.
Sw. 3-6-C (F.8 - 2.8)
Fixt: 3-6-C-C (E.2 - 3.1)
3-6-C-C (D.5 - 2.3)
3-6-C-C (D.5 - 3.4)
3-6-C-C (D.3 - 2.9)

Bkr. 7 (3-7-C) Load: Two Type C Fixtures (El. 36 ft, 4 in.), 600 watts total.
Sw. 3-7-C (F.8 - 2.8)
Fixt: 3-7-C-C (J.7 - 4.5)
3-7-C-C (J.2 - 4.6)

Bkr. 8 (3-8-C) Load: Three Type C Fixtures (El. 46 ft, 4 in.), 900 watts total.
Sw. 3-8-C (F.8 - 2.8)
Fixt: 3-8-C-C (C.6 - 2.8)
3-8-C-C (C.5 - 3.5)
3-8-C-C (C.9 - 3.9)

Bkr. 9 (3-9-C) Load: Three Type C Fixtures (El. 46 ft, 4 in.), 900 watts total.
Sw. 3-9-C (F.8 - 2.8)
Fixt: 3-9-C-C (J.9 - 5.3)
3-9-C-C (J.4 - 5.1)
3-9-C-C (H.9 - 5.3)

Bkr. 10 (3-10-C) Load: Three Type C Fixtures (El. 46 ft, 4 in.), 900 watts total.
Sw. 3-10-C (F.8 - 2.8)
Fixt: 3-10-C-C (B.8 - 3.6)
3-10-C-C (B.9 - 4.2)
3-10-C-C (C.4 - 4.5)

Bkr. 11 (3-11-C) Load: Nine Type J1 Fixtures (El. 45 ft, 4 in.), 1350 watts total.
Sw. 3-11-1-AS (H.8 - 6.0)
Fixt: 3-11-1-J1 (J.0 - 6.0)
3-11-1-J1 (J.3 - 6.0)
3-11-1-J1 (J.6 - 6.0)

Bkr. 12 (3-12-C) Load: Ten Type M Fixtures (El. 46 ft, 4 in.), 1000 watts total.
Sw. 3-12-1-AS (C.2 - 4.9)
Fixt: 3-12-1-M (B.7 - 4.9)
3-12-1-M (B.6 - 5.3)

Bkr. 13 (Spare Breaker)

Bkr. 14 Load: Seven Duplex Receptacles, 500 watts total

Fixt: 3-14-0-AA (B.2 - 5.0)
3-14-0-AA (C.4 - 5.3)
3-14-0-AA (B.6 - 5.6)
3-14-0-AA (B.0 - 6.0)
3-14-0-AA (B.7 - 6.4)
3-14-0-AA (B.7 - 6.5)
3-14-0-AA (C.4 - 6.5)

Bkr. 15 (Spare Breaker)

Bkr. 16 (Spare Breaker)

Bkr. 17 (3-17-C) Load: Two Type C1 Fixtures (El. 46 ft, 5 in.); One Type L Fixture (El. 51 ft, 4 in.), 1100 watts total.
Sw. 3-17-C (F.8 - 2.8)
Fixt: 3-17-C-C1 (D.3 - 6.0)
3-17-C-C1 (D.7 - 6.0)
3-17-C-L (E.4 - 6.2)

Bkr. 18 (Spare Breaker)

Bkr. 19 (3-19-0) Load: Five Duplex Receptacles, Rated Load 500 watts total.
Fixt: 3-19-0-AA (G.6 - 3.0)
3-19-0-AA (H.0 - 2.5)
3-19-0-AA (H.1 - 3.9)
3-19-0-AA (H.8 - 3.3)
3-19-0-AA (G.9 - 4.1)

Bkr. 20 (3-20-0) Load: Four Duplex Receptacles, rated load 500 watts total.
Fixt: 3-20-0-AA (F.7 -2.7)
3-20-0-AA (G.0 - 2.7)
3-20-0-AA (G.5 - 2.4)
3-20-0-AA (G.5 - 3.0)

Bkr. 21 (3-21-0) Load: Two Duplex Receptacles, Rated Load 500 watts total.
Fixt: 3-21-0-AA (H.9 - 4.3)
3-21-0-AA (J.5 - 4.1)

Bkr. 22 (3-22-0) Load: Four Duplex Receptacles, Rated Load 500 watts total.
Fixt: 3-22-0-AA (E.3 - 3.3)
3-22-0-AA (E.6 - 2.1)
3-22-0-AA (D.0 - 2.6)
3-22-0-AA (B.5 - 4.0)

Bkr. 23 (3-23-) Load: Five Duplex Receptacles, 500 watts total.
Fixt: 3-23-0-AA (H.8 - 5.5)
3-23-0-AA (J.4 - 5.6)
3-23-0-AA (J.8 - 6.0)
3-23-0-AA (J.4 - 6.4)
3-23-0-AA (H.6 - 6.6)

Bkr. 24 (Spare Breaker)

Bkr. 25 (3-25-0) Load: Four Duplex Receptacles, 500 watts total.
Fixt: 3-25-0-AA (G.6 - 5.6)
3-25-0-AA (F.2 - 5.7)
3-25-0-AA (D.2 - 6.0)
3-25-0-AA (D.7 - 6.0)

Bkr. 26 (3-26-0) Load: Two 100 watt lamps, receptacles 500 watts total.
Fixt: Service and Emergency Air Locks

Bkr. 27 (Spare Breaker)

Bkr. 28 (Spare Breaker)

Bkr. 29 (Spare Breaker)

Bkr. 30 (Spare Breaker)

D. Lighting Cabinet No. 4:
   1. Location: (El. 40 ft, 4 in.) (E.2 - 9.3)
   2. Circuit Breakers:
      a. Main Circuit Breaker, controls power to the branch circuits supplied by Lighting Cabinet No. 1.
      b. Branch Circuit Breakers, controls power to the lighting branches. The breakers, switches, and fixtures associated with Cabinet No. 4 are listed below:

Bkr. 1 (4-1-C) Load: Seven Type J1 Fixtures (El. 45 ft, 4 in.), 1050 total watts.
Sw. 4-1-1-AU (G.2 - 8.5)
Fixt: 4-1-1-J1 (G.1 - 8.7)

Sw. 4-1-2-AS (G.9 - 9.3)
Fixt: 4-1-2-J1 (H.0 - 9.2)

Sw. 4-1-3-AS (G.8 - 8.5)
Fixt: 4-1-3-J1 (G.5 - 8.5)

Bkr. 2 (4-2-C) Load: Ten Type J1 Fixtures (El. 45 ft, 4 in.), 1500 watts total.
Sw. 4-2-1-AS (D.9 - 8.6)
Fixt: 4-2-1-J1 (D.9 - 8.7)
4-2-1-J1 (D.7 - 9.2)
4-2-1-J1 (D.5 - 9.5)

Bkr. 3 (4-3-C) Load: Three Type C Fixtures (El. 45 ft, 4 in.), 900 watts total.
Sw. 4-3-C (E.2 - 9.3)
Fixt: 4-3-C-C (F.4 - 9.0)
4-3-C-C (F.4 - 9.6)
4-3-C-C (F.7 - 10.0)

Bkr. 4 (4-4-C) Load: Ten Type J Fixtures (El. 45 ft, 4 in.), 1000 watts total.
Sw. 4-4-2-AY (D.3 - 8.3) (C.7 - 7.6)
Fixt: 4-4-2-J (C.3 - 8.7)
4-4-2-J (D.0 - 8.7)

Bkr. 5 (4-5-C) Load: Seven Type J1 Fixtures (El. 45 ft, 4 in.), 1050 watts total.
Sw. 4-5-1-AU (G.2 - 8.5)
Fixt: 4-5-1-J1 (G.2 - 9.3)
4-5-1-J1 (G.5 - 9.5)

Table 912-1 (Continued)

Bkr. 6 (4-6-C) Load: Eleven Type J Fixtures (El. 45 ft, 4 in.), 1100 watts total.
Sw. 4-6-2-AY (D.3 - 8.3) (C.7 - 7.6)
Fixt: 4-6-2-J (C.9 - 8.1)
4-6-2-J (C.5 - 8.3)

Bkr. 7 (4-7-C) Load: Three Type C Fixtures (El. 46 ft, 4 in.), 900 watts total.
Sw. 4-7-C (E.2 - 9.3)
Fixt: 4-7-C-C (E.7 - 9.0)
4-7-C-C (E.4 - 9.5)
4-7-C-C (E.3 - 10.0)

Bkr. 8 (4-8-C) Load: One Type S Fixture (El. 44 ft, 10 in.); Three Type J1 Fixtures (El. 45 ft, 4 in.), 500 watts total.
Sw. 4-8-1-AS (C.5 - 7.3)
Fixt: 4-8-1-S (C.5 - 7.4)

Sw. 4-8-2-AS (C.4 - 7.0)
Fixt: 4-8-2-J1 (C.2 - 7.3)
4-8-2-J1 (B.9 - 7.4)
4-8-2-J1 (B.5 - 7.5)

Bkr. 9 (4-9-C) Load: Six Type D Fixtures (El.), 900 watts total.
Sw. 4-9-1-AX (H.3 - 7.5)
Fixt: 4-9-1-D (H.5 - 7.7)
4-9-1-D (H.7 - 7.4)
4-9-1-D (H.9 - 7.1)

Sw. 4-9-2-AX (H.3 - 7.5)
Fixt: 4-9-2-D (H.8 - 7.9)
4-9-2-D (J.0 - 7.5)
4-9-2-D (J.2 - 7.3)

Bkr. 10 (4-10-C) Load: Seven Type J1 Fixtures (El. 45 ft, 4 in.), 1050 watts total.
Sw. 4-10-1-AS (C.2 - 6.7)
Fixt: 4-10-1-J1 (C.1 - 6.7)
4-10-1-J1 (B.7 - 6.8)
4-10-1-J1 (B.3 - 6.9)

Bkr. 11 (4-11-C) Load: Four Type E Fixtures (El.), 600 watts total.
Sw. 4-11-1-AX (H.3 - 7.5)
Fixt: 4-11-1-E (J.1 - 6.9)
4-11-1-E (J.3 - 7.2)
4-11-1-E (H.7 - 8.3)
4-11-1-E (H.4 - 8.2)

Bkr. 12 (4-12-C) Load: Ten Type M Fixtures (El. 46 ft, 4 in.), 1000 watts total.
Sw. 4-12-1-AS (C.2 - 5.9)
Fixt: 4-12-1-M (B.7 - 5.7)
4-12-1-M (B.7 - 6.3)

Bkr. 13 (4-13-C) Load: Four Type C Fixtures (El. 65 ft, 0 in.), 1200 watts total.
Sw. 4-13-C (E.2 - 9.3)
Fixt: 4-13-C-C (C.1 - 8.2)
4-13-C-C (B.8 - 7.8)
4-13-C-C (B.6 - 7.4)
4-13-C-C (B.5 - 6.9)

Bkr. 14 (4-14-C) Load: Three Type C Fixtures (El. 65 ft, 0 in.); One Type C Fixture (El. 81 ft, 0 in.), 1200 watts total.
Sw. 4-14-C (E.2 - 9.3)
Fixt: 4-14-C-C (D.7 - 9.4)
4-14-C-C (D.1 - 9.4)
4-14-C-C (C.8 - 8.9)
4-14-C-C (C.6 - 8.6)

Bkr. 15 (4-15-C) Four Type C Fixtures (El. 65 ft, 0 in.), 1200 watts total.
Sw. 4-15-C (E.2 - 9.3)
Fixt: 4-15-C-C (B.4 - 6.4)
4-15-C-C (B.4 - 5.9)
4-15-C-C (B.4 - 5.4)
4-15-C-C (B.5 - 4.9)

Bkr. 16 (4-16-C) Load: Four Type C Fixtures (El. 81 ft, 0 in.); One Type C Fixture (El. 73 ft, 0 in.), 1500 watts total.
Sw. 4-16-C (E.2 - 9.3)
Fixt: 4-16-C-C (C.6 - 8.2)
4-16-C-C (C.3 - 7.6)
4-16-C-C (C.0 - 7.2)
4-16-C-C (B.8 - 6.7)
4-16-C-C (D.1 - 8.2)

Bkr. 17 (4-17-C) Load: Four Type C Fixtures (El. 65 ft, 0 in.), 1200 watts total.
Sw. 4-17-C (E.2 - 9.3)
Fixt: 4-17-C-C (C.0 - 6.9)
4-17-C-C (B.9 - 6.4)
4-17-C-C (B.9 - 5.9)
4-17-C-C (C.0 - 5.4)

Bkr. 18 (4-18-C) Load: Two Type C Fixtures (El. 88 ft, 7 in.); One Type C Fixture (El. 88 ft, 7 in.); Two Type C Fixtures (El.), 1500 watts total.
Sw. 4-18-C (E.2 - 9.3)
Fixt: 4-18-C-C (B.4 - 6.4)
4-18-C-C (B.5 - 5.7)
4-18-C-C (B.9 - 5.4)
4-18-C-C (C.0 - 5.9)
4-18-C-C (C.0 - 6.4)

Bkr. 19 (4-19-0) Load: Six Duplex Receptacles, Rated Load 500 watts total.
Fixt: 4-19-0-AA (E.2 - 9.3)
4-19-0-AA (E.0 - 9.3)
4-19-0-AA (D.5 - 9.7)
4-19-0-AA (D.4 - 9.0)
4-19-0-AA (F.9 - 9.9)
4-19-0-AA (F.7 - 8.7)

Bkr. 20 (4-20-0) Load: One Duplex Receptacle, Rated Load 500 watts total.
Fixt: 40-20-0-AA (D.0 - 8.0)

Bkr. 21 (4-21-0) Load: Seven Duplex Receptacles, Rated Load 500 watts total.
Fixt: 4-21-0-AA (G.1 - 9.7)
4-21-0-AA (G.9 - 9.5)
4-21-0-AA (F.9 - 9.3)
4-21-0-AA (G.0 - 8.6)
4-21-0-AA (G.9 - 9.0)
4-21-0-AA (G.8 - 8.8)
4-21-0-AA (G.6 - 8.9)

Bkr. 22 (4-22-C) Load: Three Type C Fixtures (El. 65 ft, 0 in.), 900 watts total.
Sw. 4-22-C (E.2 - 9.3)
Fixt: 4-22-C-C (E.0 - 9.0)
4-22-C-C (D.6 - 8.8)
4-22-C-C (D.1 - 8.5)

Bkr. 23 (4-23-0) Load: Six Duplex Receptacles, Rated Load 500 Watts total.
Fixt: 4-23-0-AA (H.1 - 8.7)
4-23-0-AA (H.8 - 8.8)
4-23-0-AA (J.5 - 8.0)
4-23-0-AA (J.5 - 8.0) (El. 53 ft, 4 in.)
4-23-0-AA (J.8 - 7.0)
4-23-0-AA (J.3 - 6.5)

Bkr. 24 (4-24-0) Load: Four Duplex Receptacles, Rated Load 500 watts total.
Fixt: 4-24-0-AA (C.1 - 7.5)
4-24-0-AA (C.0 - 7.1)
4-24-0-AA (B.5 - 7.3)
4-24-0-AA (B.1 - 7.0)

Bkr. 25 (4-25-0) Load: Four Duplex Receptacles, Rated Load 500 watts total.
Fixt: 4-25-0-AA (G.1 - 6.5)
4-25-0-AA (E.4 - 7.3)
4-25-0-AA (D.7 - 7.4)
4-25-0-AA (D.3 - 7.4)

Bkr. 26 (4-26-0) Load: Seven Duplex Receptacles, Rated Load 500 watts total.
Fixt: 4-26-0-AA (D.4 - 9.6)
4-26-0-AA (C.1 - 8.9)
4-26-0-AA (C.3 - 8.5)
4-26-0-AA (B.6 - 7.2)
4-26-0-AA (B.1 - 7.1)
4-26-0-AA (B.1 - 5.0)
4-26-0-AA (B.5 - 5.2)

Bkr. 27 (4-27-0) Load: Two Duplex Receptacles, Rated Load 500 watts total.
Fixt: 4-27-0-AA (F.2 - 6.2)
4-27-0-AA (F.2 - 7.2)

Bkr. 28 Two-100 watt lamps, recptacles, 500 watts total. Entrance Air Lock

Bkr. 29 (4-29-C) Four Type C Fixtures (El. 65 ft, 0 in.), 1200 watts total.
Sw. 4-29-C (E.2 - 9.3)
Fixt: 4-29-C-C (C.4 - 8.6)
4-29-C-C (C.7 - 8.2)
4-29-C-C (C.5 - 7.8)
4-29-C-C (C.3 - 7.4)

Bkr. 30 (Spare Breaker)

E. Lighting Cabinet No. 5:
1. Location: (El. 40 ft, 0 in.) (F.8 - 2.7)
2. Circuit Breakers:
a. Main Circuit Breakers, controls power to the branch circuits supplied by Lighting Cabinet No. 5.
b. Branch Circuit Breakers, controls power to the lighting branches. The breakers, switches, and fixtures associated with Cabinet No. 5 are listed below:

Bkr. 1 (5-1-C) Load: One Type A Fixture (El. 107 ft, 0 in.), 875 watts total.
Sw. 5-1-C (F.8 - 2.7)
Fixt: 5-1-C-A (E.2 - 5.6)

Bkr. 2 (5-2-C) Load: One Type A Fixture (El. 107 ft, 0 in.), 875 watts total.
Sw. 5-2-C (F.8 - 2.7)
Fixt: 5-2-C-A (C.9 - 5.5)

Bkr. 3 (5-3-C) Load: One Type A Fixture (El. 107 ft, 0 in.), 875 watts total.
Sw. 5-3-C (F.8 - 2.7)
Fixt: (E.8 - 5.2)

Bkr. 4 (5-4-C) Load: One Type A Fixture (El. 107 ft, 0 in.), 875 watts total.
Sw. 5-4-C (F.8 - 2.7)
Fixt: 5-4-C-A (D.3 - 4.7)

Bkr. 5 (5-5-C) Load: One Type A Fixture (El. 107 ft, 0 in.), 875 watts total.
Sw. 5-5-C (F.8 - 2.7)
Fixt: 5-5-C-A (F.6 - 5.4)

Bkr. 6 (5-6-C) Load: One Type A Fixture (El. 107 ft, 0 in.), 875 watts total.
Sw. 5-6-C (F.8 - 2.7)
Fixt: 5-6-C-A (D.8 - 4.3)

Bkr. 7 (5-7-C) Load: One Type A Fixture (El. 107 ft, 0 in.), 875 watts total.
Sw. 5-7-C (F.8 - 2.7)
Fixt: 5-7-C-A (G.2 - 4.3)

Bkr. 8 (Spare Breaker)

Bkr. 9 (5-9-C) Load: One Type A Fixture (El. 107 ft, 0 in.), 875 watts total.
Sw. 5-9-C (F.8 - 2.7)
Fixt: 5-9-C-A (F.5 - 3.9)

Bkr. 10 (5-10-C) Load: One Type A Fixture (El. 107 ft, 0 in.), 875 watts total.
Sw. 5-10-C (F.8 - 2.7)
Fixt: 5-10-C-A (H.1 - 5.6)

Bkr. 11 (Spare Breaker)

Bkr. 12 (5-12-C) Load: One Type A Fixture (El. 107 ft, 0 in.), 875 watts total.
Sw. 5-12-C (F.8 - 2.7)
Fixt: 5-12-C-A (E.6 - 3.9)

Bkr. 13 (Spare Breaker)

Bkr. 14 (Spare Breaker)

Bkr. 15 (Spare Breaker)

Bkr. 16 (Spare Breaker)

Bkr. 17 (Spare Breaker)

Bkr. 18 (Spare Breaker)

Bkr. 19 (Spare Breaker)

Bkr. 20 (Spare Breaker)

Bkr. 21 (Spare Breaker)

Bkr. 22 (Spare Breaker)

Bkr. 23 (Spare Breaker)

Bkr. 24 (Spare Breaker)

Bkr. E1 (5-E1-C) Load: Five Type C1 Fixtures (El. 25 ft, 0 in.), 1500 watts total.
Sw. 5-E1-C (F.8 - 2.7)
Fixt: 5-E1-C-C1 (F.4 - 5.8)
5-E1-C-C1 (H.4 - 5.0)
5-E1-C-C1 (E.6 - 3.4)
5-E1-C-C1 (E.8 - 2.2)
5-E1-C-C1 (C.5 - 5.0)

Bkr. E2 (Spare Breaker)

Bkr. E3 (5-E3-C) Load: Three Type S Fixtures (El. 44 ft, 10 in.); One Type V Fixture (El. 47 ft, 0 in.) 325 watts total.

Sw. 5-E3-C (F.8 - 2.7)
Fixt: 5-E3-C-S (H.6 - 5.3)
5-E3-C-S (F.7 - 3.4)
5-ED-C-S (D.0 - 4.0)

Sw. 5-E3-C (F.8 - 2.7)
Fixt: 5-E3-C-V (F.0 - 2.4)

Bkr. E4 (5-E4-0) Load: Four Portable Type Lamps (El. 43 ft, 4 in.); 2 Portable Type Lamps (El. 22 ft, 0 in.)
Loss of Power Relay
Fixt: 5-E4-0-P (H.6 - 4.3)
5-E4-0-P (E.3 - 3.3)
5-E4-0-P (H.6 - 7.0)
5-E4-0-P (H.3 - 7.6)
5-E4-0-P (H.7 - 5.2)
5-E4-0-P (E.3 - 3.3)

Bkr. E5 (5-E5-C) Load: One Type A Fixture (El. 107 ft, 0 in.), 875 watts total.
Sw. 5-E5-C (F.8 - 2.7)
Fixt: 5-E5-C-A (G.8 - 4.8)

Bkr. E6 (Spare Breaker)

F. Lighting Cabinet No. 6:
1. Location: (El. 40 ft, 4 in.) (E.1 - 9.5)
2. Circuit Breakers:
a. Main Circuit Breaker, controls power to the branch circuits supplied by Lighting Cabinet No. 6.
b. Branch Circuit Breakers, controls power to the lighting branches. The breakers, switches, and fixtures associated with Cabinet No. 6 are listed below:

Bkr. 1 (6-1-C) Load: One Type A Fixture (El. 107 ft, 0 in.), 875 watts total.
Sw. 6-1-C (E.1 - 9.5)
Fixt: 6-1-C-A (F.8 - 6.3)

Bkr. 2 (6-2-C) Load: One Type A Fixture (El. 107 ft, 0 in.), 875 watts total.
Sw. 6-2-C (E.1 - 9.5)
Fixt: 6-2-C-A (H.1 - 6.5)

Bkr. 3 (6-3-C) Load: One Type A Fixture (El. 107 ft, 0 in.), 875 watts total.
Sw. 6-3-C (E.1 - 9.5)
Fixt: 6-3-C-A (F.1 - 6.8)

Bkr. 4 (6-4-C) Load: One Type A Fixture (El. 107 ft, 0 in.), 875 watts total.
Sw. 6-4-C (E.1 - 9.5)
Fixt: 6-4-C-A (G.8 - 7.2)

Bkr. 5 (6-5-C) Load: One Type A Fixture (El. 107 ft, 0 in.), 875 watts total.
Sw. 6-5-C (E.1 - 9.5)
Fixt: 6-5-C-A (E.3 - 6.6)

Bkr. 6 (6-6-C) Load: One Type A Fixture (El. 107 ft, 0 in.), 875 watts total.
Sw. 6-6-C (E.1 - 9.5)
Fixt: 6-6-C-A (G.2 - 7.8)

Bkr. 7 (6-7-C) Load: One Type A Fixture (El. 107 ft, 0 in.), 875 watts total.
Sw. 6-7-C (E.1 - 9.5)
Fixt: 6-7-C-A (D.9 - 7.8)

Bkr. 8 (Spare Breaker)

Bkr. 9 (6-9-C) Load: One Type A Fixture (El. 107 ft, 0 in.), 875 watts total.
Sw. 6-9-C (D.1 - 9.5)
Fixt: 6-9-C-A (E.6 - 8.2)

Bkr. 10 (6-10-C) Load: One Type A Fixture (El. 107 ft, 0 in.), 875 watts total.
Sw. 6-10-C (E.1 - 9.5)
Fixt: 6-10-C-A (C.9 - 6.5)

Bkr. 11 (6-11-C) Load: Three Type L Fixtures (El. 51 ft, 4 in.), 1500 watts total.
Sw. 6-11-C (D.1 - 9.5)
Fixt: 6-11-C-L (C.5 - 6.8)
6-11-C-L (C.6 - 6.4)
6-11-C-L (C.8 - 5.9)

Bkr. 12 (6-12-C) Load: One Type A Fixture (El. 107 ft, 0 in.), 875 watts total.
Sw. 6-12-C (E.1 - 9.5)
Fixt: 6-12-C-A (F.4 - 8.1)

Bkr. 13 (6-13-C) Load: Three Type L Fixtures (El. 51 ft, 4 in.), 1500 watts total.
Sw. 6-13-C (E.1 - 9.5)
Fixt: 6-13-C-L (D.8 - 7.6)
6-13-C-L (D.4 - 7.7)
6-13-C-L (D.0 - 7.5)

Bkr. 14 (Spare Breaker)

Bkr. 15 (6-15-C) Load: Three Type L Fixtures (El. 15 ft, 4 in.), 1500 watts total.
Sw. 6-15-C (E.1 - 9.5)
Fixt: 6-15-C-L (F.0 - 7.4)
6-15-C-L (E.6 - 7.7)
6-15-C-L (E.3 - 7.4)

Bkr. 16 (Spare Breaker)

Bkr. 17 (6-17-0) Load: Seven Duplex Receptacles, Rated Load 500 watts total.
Fixt: 6-17-0-AA (C.9 - 5.8)
6-17-0-AA (D.5 - 5.9)
6-17-0-AA (D.9 - 5.8)
6-17-0-AA (F.1 - 6.3)
6-17-0-AA (F.1 - 7.8)
6-17-0-AA (D.5 - 7.7)
6-17-0-AA (C.6 - 6.7)

Bkr. 18 (6-18-C) Load: Six Type E Fixtures (El.), 900 watts total.
Sw. 6-18-1-AX (H.3 - 7.5)
Fixt: 6-18-1-E (J.0 - 6.9)
6- 18-1-E (J.2 - 7.1)
6-18-1-E (J.3 - 7.3)
6-18-1-E (J.0 - 8.1)
6-18-1-E (H.5 - 8.3)
6-18-1-E (H.2 - 8.1)

Bkr. 19 (6-19-C): Load: Sixteen 60-watt lamps (El.), 960 watts total.
Sw. 6-19-1 (J.1 - 6.7)
Fixt: 6-19-1-60 (J.1 - 6.7)

Sw. 6-19-2 (J.2 - 6.8)
Fixt: 6-19-2-60 (J.2 - 6.8)

Sw. 6-19-3 (J.3 - 6.9)
Fixt: 6-19-3-60 (J.4 - 6.9)

Table 912-1 (Continued)

Sw. 6-19-4 (J.5 - 7.1)
Fixt: 6-19-4-60 (J.5 - 7.1)

Sw. 6-19-5 (J.5 - 7.3)
Fixt: 6-19-5-60 (J.5 - 7.3)

Sw. 6-19-6 (J.4 - 7.5)
Fixt: 6-19-6-60 (J.4 - 7.5)

Sw. 6-19-7 (J.3 - 7.7)
Fixt: 6-19-7-60 (J.3 - 7.7)

Sw. 6-19-8 (J.3 - 7.8)
Fixt: 6-19-8-60 (J.3 - 7.8)

Sw. 6-19-9 (J.2 - 8.0)
Fixt: 6-19-9-60 (J.2 - 8.0)

Sw. 6-19-10 (J.1 - 8.1)
Fixt: 6-19-10-60 (J.1 - 8.1)

Sw. 6-19-11 (J.0 - 8.2)
Fixt: 6-19-11-60 (J.0 - 8.2)

Sw. 6-19-12 (H.9 - 8.3)
Fixt: 6-19-12-60 (H.9 - 8.3)

Sw. 6-19-13 (H.9 - 8.3)
Fixt: 6-19-13-60 (H.9 - 8.3)

Sw. 6-19-14 (H.7 - 8.3)
Fixt: 6-19-14-60 (H.7 - 8.3)

Sw. 6-19-15 (H.5 - 8.3)
Fixt: 6-19-15-60 (H.5 - 8.3)

Sw. 6-19-16 (H.3 - 8.3)
Fixt: 6-19-16-60 (H.3 - 8.3)

Bkr. 20 (6-20-C) Load: Nine Type F Fixtures (El.); 900 watts total.
Sw. 6-20-1-AX (H.3 - 7.5)
Fixt: 6-20-1-F (J.3 - 6.7)
6-20-1-F (J.5 - 6.9)
6-20-1-F (J.6 - 7.3)
6-20-1-F (J.5 - 7.5)
6-20-1-F (J.4 - 7.9)
6-20-1-F (J.2 - 8.2)
6-20-1-F (H.9 - 8.4)
6-20-1-F (H.6 - 8.4)
6-20-1-F (H.3 - 8.4)

Bkr. 21 (6-21-0) Load: Three Duplex Receptacles, Rated Load 500 watts total.
Fixt: 6-21-0-AA (J.3 - 7.0)
6-21-0-AA (J.3 - 7.8)
6-21-0-AA (H.8 - 8.3)

Bkr. 22 (Spare Breaker)

Bkr. 23 (Spare Breaker)

Bkr. 24 (Spare Breaker)

Bkr. E1 (6-E1-C) Load: Three Type C1 Fixtures (El. 25 ft, 0 in.); One Type S1 Fixture (El. 23 ft, 6 in.), 1000 watts total.
Sw. 6-E1-C (E.1 - 9.5)
Fixt: 6-E1-C-C1 (H.0 - 7.6)
6-E1-C-C1 (E.7 - 8.6)
6-E1-C-C1 (D.0 - 7.6)
6-E1-C-S1 (D.7 - 6.0)

Bkr. E2 (6-E2-C) Load: Three Type E Fixtures (El.), 450 watts total.
Sw. 6-E2-1-AX (H.3 - 7.3)
Fixt: 6-E2-1-E (J.2 - 7.6)
6-E2-1-E (J.2 - 7.8)
6-E2-1-E (J.1 - 7.9)

Bkr. E3 (6-E3-C) Load: Two Type S Fixtures (El. 44 ft, 10 in.); One Type V Fixture (El. 47 ft, 0 in.); One Type L Fixture (El. 51 ft, 4 in.), 725 watts total.
Sw. 6-E3-C (E.1 - 9.5)
Fixt: 6-E3-C-S (H.0 - 8.0)
6-E3-C-S (E.3 - 8.7)
6-E3-C-V (F.0 - 9.7)
6-E3-C-L (C.7 - 7.2)

Bkr. E4 (6-E4-C) Load: Two Portable Type Lamps (El. 43 ft, 4 in.); One Portable Type Lamp (El. 71 ft, 0 in.); One Portable Type Lamp (El. 54 ft, 4 in.); Two Portable Type Lamps (El. 22 ft, 0 in.),
Loss of Power Relay
Fixt: 6-E4-0-P (C.2 - 6.8)
6-E4-0-P (E.3 - 8.7)
6-E4-0-P (C.5 - 6.3)
6-E4-0-P (E.2 - 8.8)
6-E4-0-P (C.2 - 6.7)
6-E4-0-P (E.2 - 8.8)

Bkr. E5 (6-E5-C) Load: One Type A Fixture (El. 107 ft, 0 in.), 875 watts total.
Sw. 6-E5-C (E.1 - 9.5)
Fixt: 6-E5-C-A (D.2 - 7.2)

Bkr. E6 (6-E6-0) Load: Two Duplex Receptacles, Rated Load 500 watts total.
Fixt: 6-E6-0-AA (F.7 - 9.0)
6-E6-0-AA (Entrance Bldg.)

G. Lighting Cabinet No. 7:
1. Location: (El. 40 ft, 4 in.)(C.5 - 7.5)
2. Circuit Breakers:
a. Main Circuit Breaker, controls power to the branch circuits supplied by Lighting Cabinet No. 7.
b. Branch Circuit Breakers, controls power to the lighting branches. The breakers, switches, and fixtures associated with Cabinet No. 7 are listed below:

Bkr. 1 (7-1-0) Load: One Duplex Receptacle, Rated Load 1500 watts total.
Fixt: 7-1-0-AA (D.1 - 8.1)

Bkr. 2 (7-2-0) Load: One Duplex Receptacle, Rated Load 1500 watts total.
Fixt: 7-2-0-AA (D.4 - 8.6)

Bkr. 3 (7-3-0) Load: One Duplex Receptacle, Rated Load 1500 watts total.
Fixt: 7-3-0-AZ (C.2 - 7.9)

Bkr. 4 (7-4-0) Load: One Duplex Receptacle, Rated Load 1500 watts total.
Fixt: 7-4-0-AA (C.1 - 7.8)

Bkr. 5 (7-5-0) Load: One Duplex Receptacle, Rated Load 1500 watts total.
Fixt: 7-5-0-AA (B.8 - 7.9)

Bkr. 6 (7-6-0) Load: One Duplex Receptacle, Rated Load 1500 watts total.
Fixt: 7-6-0-AZ (C.7 - 7.7)

Bkr. 7 (7-7-0) Load: One Duplex Receptacle, Rated Load 1500 watts total.
Fixt: 7-7-0-AZ (C.9 - 7.9)

Bkr. 8 (7-8-0) Load: One Duplex Receptacle, Rated Load 1500 watts total.
Fixt: 7-8-0-AZ (C.3 - 8.2)

Bkr. 9 (7-9-0) Load: One Duplex Receptacle, Rated Load 1500 watts total.
Fixt: 7-9-0-AZ (C.8 - 8.5)

Bkr. 10 (7-10-0) Load: One Duplex Receptacle, Rated Load 1500 watts total.
Fixt: 7-10-0-AZ (C.3 - 8.2)

Bkr. 11 (7-11-0) Load: One Duplex Receptacle, Rated Load 1500 watts total.
Fixt: 7-11-0-AZ (C.8 - 8.5)

Bkr. 12 (7-12-0) Load: One Duplex Receptacle, Rated Load 1500 watts total.
Fixt: 7-12-0-AZ (B.9 - 8.4)

Bkr. 13 (7-13-0) Load: One Duplex Receptacle, Rated Load 1500 watts total.
Fixt: 7-13-0-AZ (C.1 - 8.7)

Bkr. 14 (7-14-0) Load: One Duplex Receptacle, Rated Load 1500 watts total.
Fixt: 7-14-0-AZ (C.5 - 9.2)

Bkr. 15 (7-15-0) Load: One Duplex Receptacle, Rated Load 1500 watts total.
Fixt: 7-15-0-AZ (C.8 - 9.5)

Bkr. 16 Glove Box Power Unit and Lighting; Fume Hood Lighting.

Bkr. 17 Oven, 650 watts total.

Bkr. 18 Furnace, 2000 watts total.

Bkr. 19 Water Still, 3000 watts total.

Bkr. 20 (7-20-0) Load: One Duplex Receptacle, Rated Load 1500 watts total.
Fixt: 7-20-0-AZ (C.2 - 7.9)

Table 912-1 (Continued)

Bkr. 21 (Spare Breaker)

Bkr. 22 (Spare Breaker)

Bkr. 23 (Spare Breaker)

Bkr. 24 (7-24-0) Load: Two Single Receptacles, Rated Load 1500 watts total.
Fixt: 7-24-0-AD (C.6 - 9.2)
7-24-0-AD (C.7 - 9.3)

Bkr. 25 (Spare Breaker)

Bkr. 26 Fume Hood Blower Motor

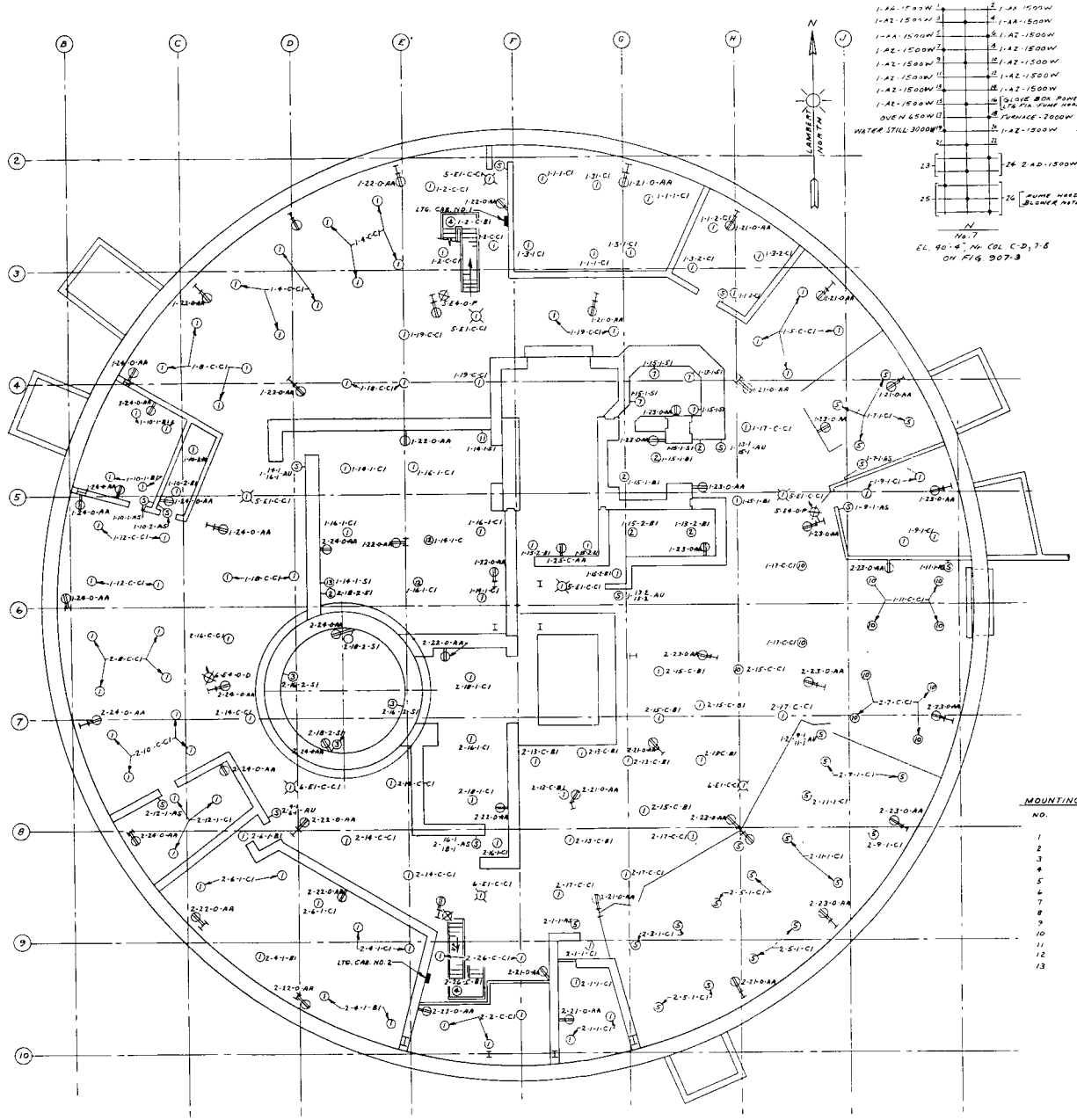

BASEMENT FLOOR EL. 16'-0"

EL. 40'-4", NR. COL C-D, 7-8
ON FIG. 907-3

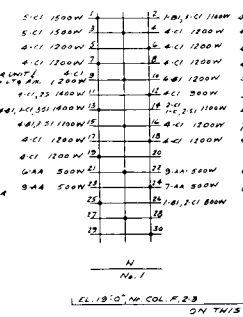

EL. 19'-0", NR. COL. F, 2-3

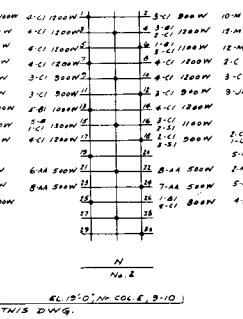

EL. 19'-0", NR. COL. E, 9-10

ON THIS DWG.

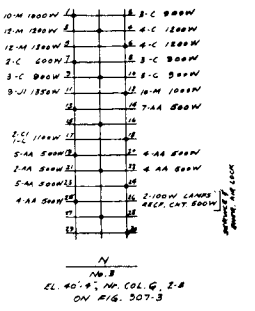

EL. 40'-4", NR. COL. G, 2-8
ON FIG. 907-3

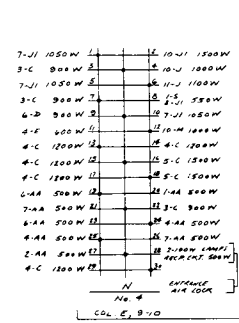

COL. E, 9-10

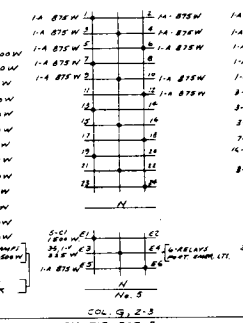

COL. G, 2-3

ON FIG. 907-3

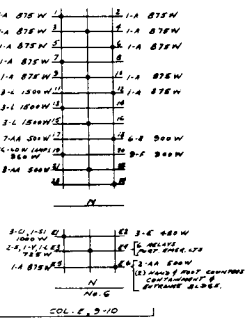

COL. E, 9-10

LIGHTING CABINET LOADING DIAGRAMS

LEGEND (FOR LOADING DIAG. ONLY)

5 - C1 1500W
- 5: QUANTITY
- C1: FIXTURE TYPE, SEE FIXTURE DETAILS
- 1500W: TOTAL LOAD IN WATTS

MOUNTING SCHEDULE

NO.	BOT. OF FIX. AT EL.
1	25'-0"
2	23'-6"
3	18'-10"
4	34'-10"
5	25'-8"
6	32'-6"
7	23'-5"
8	31'-6"
9	34'-0"
10	30'-4"
11	32'-0"
12	27'-6"
13	33'-0"

LEGEND:

- LIGHTING CABINET OR DISTRIBUTION PANEL
- FLUORESCENT LIGHTING FIXTURE, 8 FT. LONG, NUMERAL REFERS TO MOUNTING SCHEDULE.
- (3) CEILING OR PENDANT LIGHTING FIXTURE, NORMAL CIRCUIT. NUMERAL REFERS TO MOUNTING SCHEDULE.
- WALL LIGHTING FIXTURE, NORMAL CIRCUIT.
- CEILING OR PENDANT LIGHTING FIXTURE, EMERGENCY CIRCUIT.
- (S) WALL SWITCH OUTLET.
- WALL RECEPTACLE.
- PORTABLE WALL EMERGENCY LIGHTING FIXTURE, ARROW INDICATES DIRECTION OF BEAM.

3-4-C-C FIXTURE CONNECTED TO LIGHTING CAB. 3, CIRCUIT 4, CAB. SWITCHED, FIXTURE C.

3-3-1-M FIXTURE CONNECTED TO LIGHTING CAB. 3, CIRCUIT 3, LOCAL SW. 1, FIXTURE M.

3-22-0-AA OUTLET CONNECTED TO LIGHTING CAB. 3, CIRCUIT 22, NOT SWITCHED (NUT LOCK-DOG ON ACB HANDLE IN CAB.), FIXTURE AA. (SEE FIXTURE SCHEDULE FOR AA, AS, & AU)

REF. DWG. J.E.M. 40-E-24 REV. 3

Fig. 912-1 Lighting basement floor level.

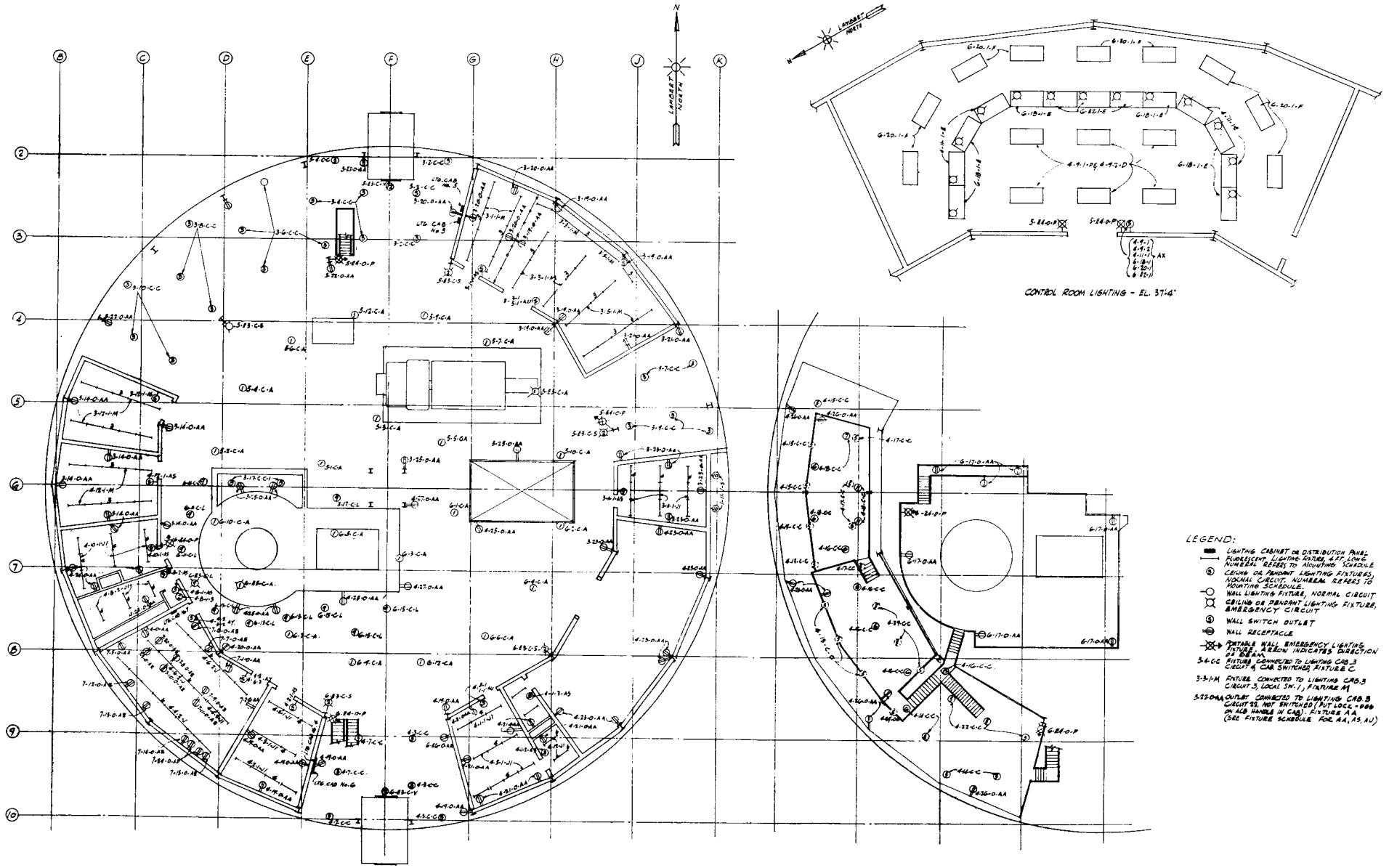

Fig. 912-2 Lighting main floor level.

913. COMMUNICATIONS

Off-site and on-site communication is available in the site administrator's office, shift supervisor's office, control room, and switchboard in the entrance building.

Off-site communication is available through the commercial telephone system and the PRWRA microwave communication system.

On-site communication is available through the plant paging or intercommunication systems. Figures 913-1 and 913-2 show the location of the components of the communication and paging systems at the various plant levels.

The paging system consists of twenty-four (24) handsets and twenty-one (21) speakers or horns located throughout the building and site as shown on Table 913-1. An individual transistorized amplifier is located at each speaker location. From each handset, speech is broadcast over all horns and speakers in the system. The horn adjacent to each instrument is silenced automatically when the handset is removed from its hook-switch. Two-way speech is possible through the instrument handsets or it is possible for all instruments in the system to participate in a common-talk conversation. An intermittent high-level tone scram signal is broadcast over the speaker system for five seconds. This tone overrides any conversations which may be taking place at the time the scram signal is initiated.

The intercommunication systems are divided into the operating and maintenance systems.

The operating system consists of five (5) telephone stations; pillbox, entrance building, control room, supervisor's office, and building office. The system is arranged to provide two independent conversations between any two stations at any given time.

The maintenance system is used to provide communication between any location throughout the plant and the control room during maintenance operation when close communication is required. The system consists of a fixed telephone in the control room and a series of jacks (46) located throughout the plant all on common-talk, common-ring circuits. Telephone jack locations are shown on Table 913-2. Ten portable telephone sets (5 headsets and 5 handsets) are available for plant maintenance personnel use.

Table 913-1 PAGING SYSTEM

Speaker Location	Handset Location
Feedwater Pump Area	Feedwater Pump Area
Retention Tank Area	Retention Tank Area
Vapor Sphere Area	Vapor Sphere Area
Storage Area	Storage Area
Outside Fuel Storage Room	Outside Fuel Storage Room
Lunchroom	Lunchroom
Laboratory (Speaker in Phone)	Laboratory, on desk
Inside Health-Physics Room	Inside Health-Physics Room
Service and Emergency Air Lock	Service and Emergency Air Lock
Fuel Pool Cooling Area	Fuel Pool Cooling Area
Entrance Air Lock	Entrance Air Lock
Outside Electrical Maintenance Shop	Outside Electrical Maintenance Shop
Machine Shop	Machine Shop
Biological Shield	Biological Shield
Nr. Demineralizer Water Tank	Nr. Demineralizer Water Tank
Nr. Emergency Condenser	Nr. Emergency Condenser
Control Room	Control Room - Desk Edge
Supervisor Office (Speaker in Phone)	Supervisor Office
Entrance Building (Speaker in Phone)	Entrance Building
Pillbox	Pillbox
Switchyard Area	Switchyard Area
Zeolite Treatment Area	Zeolite Treatment Area
Cooling Tower Area	Cooling Tower Area
Screenhouse Area	Screenhouse Area

Table 913-2 TELEPHONE JACKS LOCATION

	Station No.
Outside the Containment Building	
Screen Well Area	J-1
Cooling Tower Area	J-2
Switchyard Area	J-3
Pillbox Control Panel	J-4
Zeolite House	J-45
Water Storage Area	J-46
Inside the Containment Building, Basement Floor, El. 16 ft, 0 in.	
Outside Retention Tank Room	J-5
In Retention Tank Room	J-6
Outside Liquid Waste Room	J-7
In Liquid Waste Room	J-8
Near Shield Cooling Pumps	J-9
Outside Building Exhaust Fan Room	J-10
In Building Exhaust Fan Room	J-11
Near Chemical Feed Pump	J-12
Paper Baler Area	J-13
In Vapor Sphere Room	J-14
In 440 Volt Switchgear Room	J-15
In Building Inlet Fan Room	J-16
Near Freight Door	J-17
In Electrical Equipment Room	J-18
In Electrical Equipment Room	J-19
In Electrical Equipment Room	J-20
Near Make-up Demineralizers	J-21
In Reactor Purification Room	J-22
In Reactor Circulating Water Pump Room	J-23
Near Condensate Purification System Ion Exchangers	J-24
Near Seal Water Pump	J-25
In Condenser Hogging Pump Room	J-26
Near Condensate Pumps	J-27
Feedwater Heater Area	J-28
Near Turbine Lube Oil Tank	J-29
In Air Ejector Room	J-30
Outside Air Ejector Room	J-31
Inside the Containment Building, Main Floor	
Superheated Steam Header Valve Platform, El. 61 ft, 0 in.	J-32
On Biological Shield Wall, El. 37 ft, 4 in.	J-33
On Turbine Pedestal, El. 37 ft, 4 in.	J-34
On Control Panel Section D	J-35

	Station No.
On Control Panel Section F	J-36
On Control Panel Section M	J-37
Top of Biological Shield, El. 68 ft, 0 in.	J-38
Top of Biological Shield, El. 68 ft, 0 in.	J-39
Top of Biological Shield, El. 68 ft, 0 in.	J-40
Near Poison Injection Tank, El. 70 ft, 0 in.	J-41
Near Emergency Condenser, El. 74 ft, 0 in.	J-42
Top of Biological Shield, El. 68 ft, 0 in.	J-43
Top of Biological Shield, El. 68 ft, 0 in.	J-44

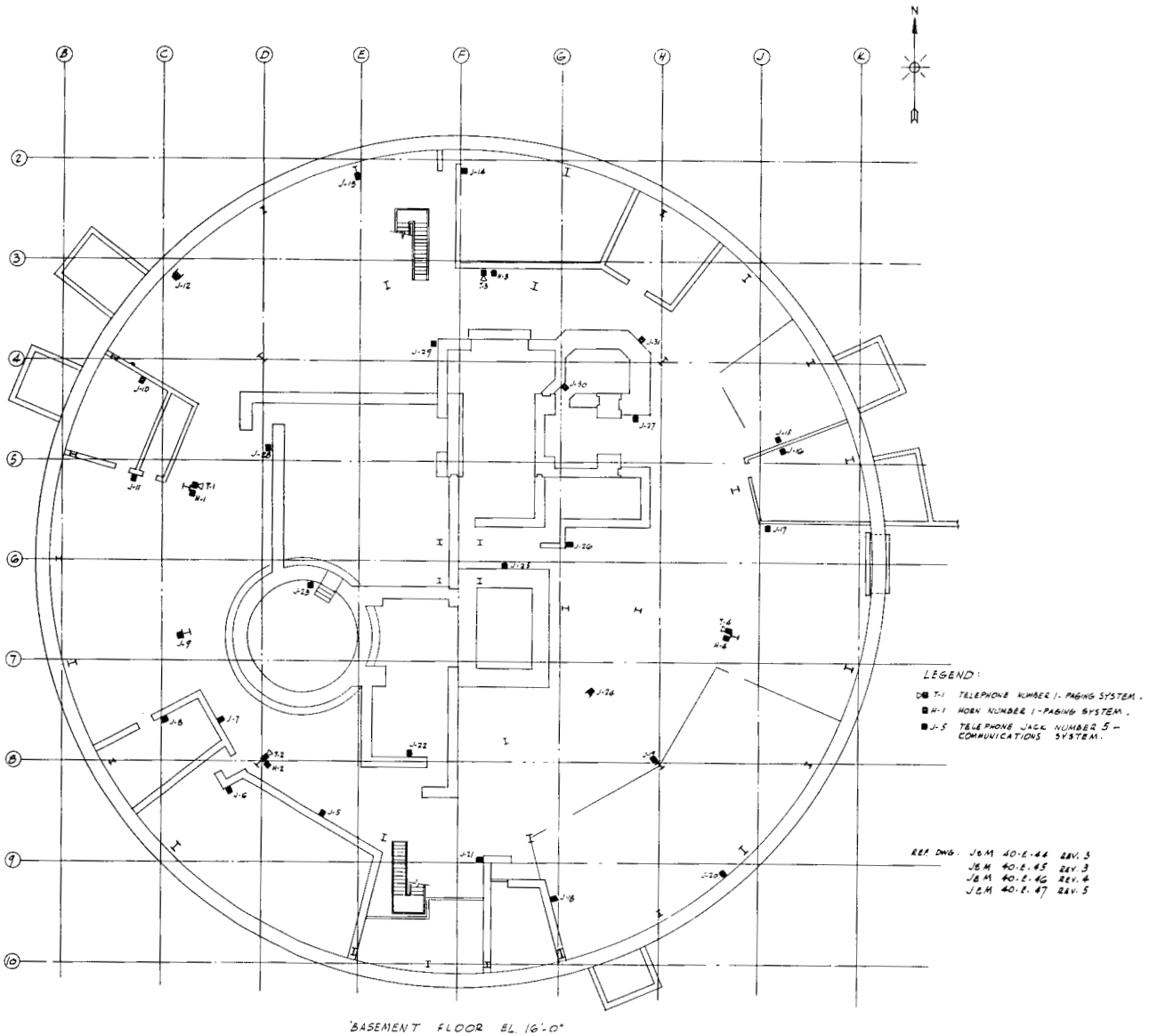

Fig. 913-1 Location of communication and paging systems basement floor level.

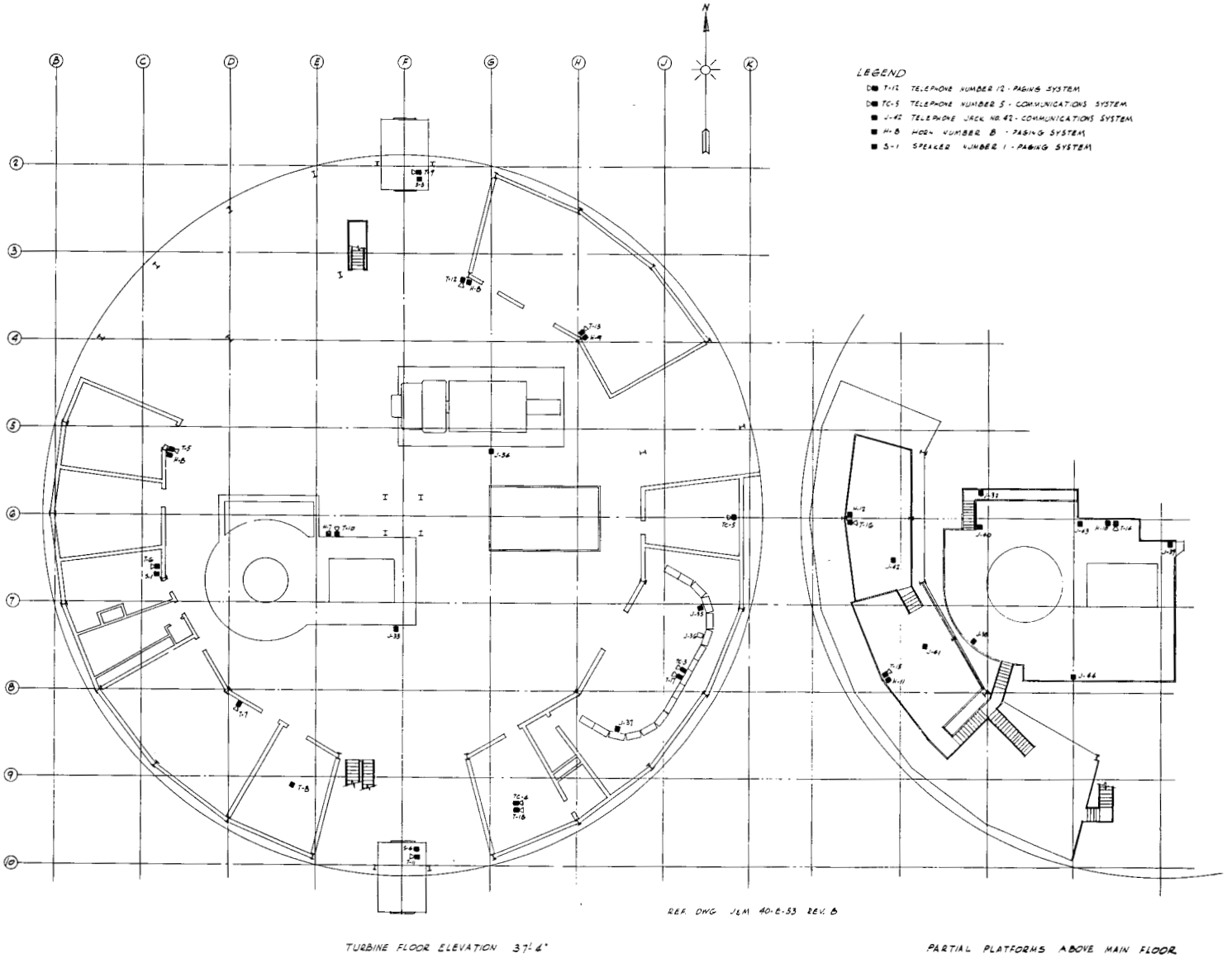

Fig. 913-2 Location of communication and paging systems turbine floor level and above.

914. PAINTING

The prime, undercoat and finish paint coatings applied to the concrete, steel and insulated piping and equipment surfaces of the plant are listed in Table 914-1. Table 914-2 lists the identification color code for the piping systems throughout the plant.

The prime coat for each of the various type surfaces listed in Table 914-1 is as follows:

Ferrous Metal

Red lead base paint conforming to Federal Specifications TT-P-86a, Type III

Galvanized Metal

Zinc dust - zinc oxide primer conforming to Federal Specification TT-P-641b, Type II

Unit Masonry and Concrete

Latex emulsion prime coat conforming to Federal Specification TT-P-29

Cement-latex filler consisting of: acrylitic emulsion exterior paint conforming to Federal Specification TT-P-19; white portland cement per Federal Specification SS-C-192, Type I or II; washed silica sand aggregate containing not more than 0.5% colloidal clay; and 46% N.V. acrylic polymer mixing liquid

Plaster

Prime coat sealer, tinted to match the finish coat color, in accordance with Federal Specification TT-P-56b

Insulation

Non-penetrating size on asbestos cloth and asbestos cement surfaces

Aluminum and Stainless Steel

Prime coat on aluminum pipe and insulation jacket and stainless steel - zinc chromate - vinyl butyral conforming to Mil-C-15328A

The undercoat and finish paint coats listed in Table 914-1 are the following:

Identification	Description
2a	Interior/Exterior aluminum phenolic paint conforming to U. S. Coast Guard Specification CGS-52P-2a
29	Interior flat latex emulsion, conforming to Federal Specification TT-P-29
489	Interior/Exterior gloss alkyd finish paint conforming to Federal Specification TT-E-489b Class A
506	Interior gloss alkyd enamel conforming to Federal Specification TT-E-506b
508	Interior semi-gloss alkyd enamel conforming to Federal Specification TT-E-508
543	Interior alkyd undercoat conforming to Federal Specification TT-E-543
AE-600	Carboline Company Phenoline AE-600 in accordance with Carboline Company Specification CSAE-600
Rub-R-Lon	Acorn Refining Company chlorinated rubber base floor enamel

Paint Color Code # Federal Standard No. 595 Chip. No.

In Table 914-2 the stripe markings on piping are 1-1/2 in. wide and multiple stripes are 1/2 in. apart. **The identification stripes** on piping systems are located 20 ft apart on straight runs and 2 ft from penetrations through floors and walls, and from turns, branches and valves.

Table 914-1 PAINTING SCHEDULE

	Prime Coat	Undercoat	Finish Coat
A. Basement (Below El. 37 ft - 4 in.) Interior			
Concrete floors, Walls and Ceilings, except as follows	Unpainted concrete	None	None
Loading Area and Ramp at Freight Door (incl. South Wall of Ramp); Heater Pit Floor and Walls below El. 16 ft - 0 in.	Unpainted concrete	"Rub-R-Lon"	Light gray
Unit Masonry Walls	Unpainted concrete block	None	None
Steel Liners at Reactor Structure, Reactor Circulating Water Pump Pit, Drain Sumps No. 1, 2, & 3	Primed steel	2a	Aluminum 2a #17178
Steel Liner at Drain Sump No. 4	Primed steel	"AE600"	Mfr's Std gray
Steel Plate Covers at Drain Sumps	Primed steel	2a	Aluminum 2a #17178
Steel Door at Reactor Circulating Water Pump Room (Inside and Outside Faces)	Primed steel	2a	Aluminum 2a #17178
Wire Mesh Partitions and Doors	Primed steel	2a	Aluminum 2a #17178
Kalamein Doors and Door Frames	Primed steel	543	Blue gray 508 #25189
Main Steel Columns and Framing	Primed steel	2a	Aluminum 2a #17178
Reactor Pump Room Ceiling Shield Framing and Bottom Face of Reactor Bottom Shield Plug	Primed steel	2a	Aluminum 2a #17178

Table 914-1 (Continued)

	Prime Coat	Undercoat	Finish Coat
B. Turbine Floor (El. 37 ft - 4 in.) and Above, Interior			
Machine Shop and Electrical Maintenance Shop			
Floor	Unpainted concrete	None	None
Walls	Unpainted concrete block		
4 in. Base		543	Blue gray 508 #25189
Upper		29	Light blue 29 #35622
Doors and Door Frames (Inside Faces)	Primed steel	543	Blue gray 508 #25189
Ceiling	Unpainted concrete	29	White 29 #37886
Wire Mesh Partition	Primed steel	2a	Aluminum 2a #17178
Office			
Floor	Vinyl Asbestos	None	None
Walls	Unpainted concrete block		
4 in. Base		543	Blue gray 508 #25189
Upper		29	Light gray 29 #36492
Door and Door Frame (Inside Face)	Primed steel	543	Blue gray 508 #25189
Ceiling	Acoustic board	None	None

Table 914-1 (Continued)

	Prime Coat	Undercoat	Finish Coat
Control Room			
Floor	Vinyl asbestos	None	None
Walls	Unpainted concrete block		
4 in. Base		543	Light green 508 #24410
Upper		29	Ivory 29 #37778
Doors, Door Frame and Window Frames (Inside Faces)	Primed steel	543	Light green 508 #24410
Ceiling	Acoustic plaster	None	None
Control Room Toilet			
Floor	Ceramic mosaic	None	None
Walls			
Dado	Ceramic tile	None	None
Upper	Unpainted concrete block	543	White 506 #17875
Door and Frame	Primed steel		
Inside Face		543	Gray green 508 #24226
Outside Face		543	Light green 508 #24410
Ceiling	Unpainted cement plaster	543	White 506 #17875

Table 914-1 (Continued)

	Prime Coat	Undercoat	Finish Coat
Shift Supervisor's Office			
Floor	Vinyl asbestos	None	None
Walls	Unpainted concrete block		
4 in. Base		543	Blue gray 508 #25189
Upper		29	Light gray 29 #36492
Door and Door Frame (Inside Face)	Primed steel	543	Blue gray 508 #25189
Ceiling	Acoustic board	None	None
Shift Supervisor's Toilet			
Floor	Ceramic mosaic	None	None
Walls			
Dado	Ceramic tile	None	None
Upper	Unpainted concrete block	543	White 506 #17875
Door and Door Frame	Primed steel		
Inside Face		543	Gray green 508 #24226
Outside Face		543	Blue gray 508 #25189
Ceiling	Unpainted cement plaster	543	White 506 #17875
Health Physics Room			
Floor	Vinyl asbestos	None	None
Walls	Unpainted concrete block		
4 in. Base		543	Blue gray 508 #25189

Table 914-1 (Continued)

Health Physics Room (Cont'd)	Prime Coat	Undercoat	Finish Coat
Upper		29	Light gray 29 #36492
Door and Door Frame (Inside Face)	Primed steel	543	Blue gray 508 #25189
Ceiling	Acoustic board	None	None
Laboratory			
Floor	Vinyl asbestos	None	None
Walls	Unpainted concrete block		
4 in. Base		543	Light green 508 #24410
Upper		29	Ivory 29 #37778
Doors and Door Frames (Inside Faces)	Primed steel	543	Light green 508 #24410
Ceiling	Acoustic board	None	None
Toilet			
Floor	Ceramic mosaic	None	None
Walls			
Dado	Ceramic tile	None	None
Upper	Concrete block	543	White 506 #17875
Door and Door Frame (Inside Face)	Primed steel	543	Gray green 508 #24226
Ceiling	Unpainted cement plaster	543	White 506 #17875
Janitor's Closet			
Floor	Unpainted concrete	None	None

Table 914-1 (Continued)

	Prime Coat	Undercoat	Finish Coat
Janitor's Closet (Cont'd)			
Walls	Unpainted concrete block		
4 in. Base		543	Gray green 508 #24226
Upper		543	White 506 #17875
Door and Door Frame (Inside and Outside Faces)	Primed steel	543	Gray green 508 #24226
Ceiling	Unpainted cement plaster	543	White 506 #17875
Lunch Room			
Floor	Vinyl asbestos	None	None
Walls	Unpainted concrete block		
4 in. Base		543	Blue gray 508 #25189
Upper		29	Light blue 29 #35622
Door and Door Frame (Inside Face)	Primed steel	543	Blue gray 508 #25189
Ceiling	Acoustic board	None	None
Spare Parts Storage Room			
Floor	Unpainted concrete	None	None
Walls	Unpainted concrete block		
4 in. Base		543	Blue gray 508 #25189
Upper		29	Light blue 29 #35622

Table 914-1 (Continued)

	Prime Coat	Undercoat	Finish Coat
Spare Parts Storage Room (Cont'd)			
Door and Door Frame (Inside Face)	Primed steel	543	Blue gray 508 #25189
Ceiling	Unpainted concrete	29	White 29 #37886
Fuel Storage Room			
Floor	Unpainted concrete	None	None
Walls	Unpainted concrete block		
4 in. Base		543	Blue gray 508 #25189
Upper		29	Light blue 29 #35622
Door and Door Frame (Inside Face)	Primed steel	543	Blue gray 508 #25189
Ceiling	Unpainted concrete	29	White 29 #37886
Reactor Structure and Fuel Pool (El. 37 ft-4 in. to El. 68 ft - 0 in.)			
Outside Steel Liner	Primed steel	29	White 29 #37886
Concrete, excepting Floor El. 68 ft - 0 in.	Unpainted concrete	29	White 29 #37886
Unit Masonry Closures	Unpainted concrete block	(Cement-latex) (filler) 29	White 29 #37886
Control Rod Drive Assembly Trench Steel Liner and Cover Plates	Primed steel	2a	Aluminum 2a #17178
Turbine Shield			
Steel Liner Plates; Door and Frame at Front Shield Wall	Primed steel	543	Orange 506 #12197
Front Shield Wall	Unpainted concrete	543	Orange 506 #12197

Table 914-1 (Continued)

	Prime Coat	Undercoat	Finish Coat
Operating Area Concrete Floors (El. 37 ft-4 in., 51 ft-4 in. and 68 ft-0 in.)	Unpainted concrete	None	None
Room Walls (Operating Area Side)	Unpainted concrete block	29	White 29 #37886
Kalamein Doors, Door Frames and Window Frames (Operating Area Side)	Primed steel	543	Orange 506 #12197
Main Steel Columns and Framing above El. 37 ft- 4 in. (including crane girders and rail), except stairs and as otherwise specified	Primed steel	543	Blue gray 508 #25189
Crane Pivot Tower above El. 37 ft-4 in.	Primed steel	543	Orange 506 #12197
Main Steel Framing in chases or shafts, or concealed by suspended ceilings	Primed steel	2a	Aluminum 2a #17178
Main Steel Posts and Framing for Platforms El. 70 ft- 0 in. and 74 ft- 0 in.	Primed steel	2a	Aluminum 2a #17178
Reactor Removable Shield Structures	Primed steel	2a	Aluminum 2a #17178
C. Miscellaneous			
Interior and Exterior of Steel Containment Shell and Airlocks	Primed steel	2a	Aluminum 2a #17178
Piping Listed in Piping Color Code (Interior and Exterior Piping)	Various	489	(For colors see Table 914-2) 489
Steel Platform Framing, Equipment Supports, Kick Plates and Angles, Stair Stringers, Ladders, Frames, Checkered Plate, Pipe Sleeves, Pipe Hangers, Cable Tray Supports, Bars, Rods, Shapes and Plates	Primed steel	2a	Aluminum 2a #17178

Table 914-1 (Continued)

	Prime Coat	Undercoat	Finish Coat
Steel Grating			
Treads and Landings for Main Steel Stairs No. 1 to 5 inclusive	Primed steel	2a	Aluminum 2a #17178
All Other Grating	Primed steel	2a	Aluminum 2a #17178
Pipe Railing	Primed steel	543	Yellow 508 #23793
Ductwork	Galvanized steel	None	None
Electrical Conduit and Cable Trays	Galvanized steel	None	None
Exposed Items adjacent to painted walls or ceilings	Various	Same number of coats, type and color as adjacent wall or ceiling	
Non-galvanized Ferrous Metal inside Ring Wall Manholes	Primed steel	2a	Aluminum 2a #17178
Angle Frame and Checkered Plate Cover at Air Exhaust Manhole (Exterior)	Primed steel	2a	Aluminum 2a #17178
Manhole Covers and Frames (Interior and Exterior)	None	None	None
Flashing Plate at Concrete Ring Wall Trench (Exterior)	Primed steel	2a	Aluminum 2a #17178
D. Equipment			
Polar Gantry Crane			
Bridge and Trolley	Primed steel	543	Orange 506 #12197
Hook and Block	Primed steel	543	Yellow 508 #23793

Table 914-1 (Continued)

	Prime Coat	Undercoat	Finish Coat
Polar Gantry Crane (Cont'd)			
Platforms, Ladders and Railing	Primed steel	543	Yellow 508 #23793
Grating	Galvanized steel	543	Yellow 508 #23793
Reactor Feedwater Pumps	Primed steel lagging	489	White 489 #17875
Reactor Circulating Water Pumps	Primed steel lagging	489	Magenta 489 #17142
Feedwater Heaters	Insulation	489	Yellow 489 #13655
Drain Cooler	Insulation	489	Yellow 489 #13655
Reactor Water Preheater	Insulation	489	Magenta 489 #17142
Regenerative Cooler	Insulation	489	Magenta 489 #17142
Secondary Cooler	Primed steel	489	Magenta 489 #17142
Reactor Purification Pumps	Insulation	489	Magenta 489 #17142
Water Treatment Equipment	Primed steel		
Reactor Water Purification and Cond. Resin Sluicing and Cond. Resin Regen.Equipment		489	Magenta 489 #17142
Condensate Purification, Fuel Pool Purification and Makeup Water Treatment Equipment		489	White 489 #17875
Emergency Condenser	Primed steel	2a	Aluminum 2a #17178
Control Air Compressor and Control Air Receiver	Mfr's std paint	None	Light gray 489 #16492

Table 914-1 (Continued)

	Prime Coat	Undercoat	Finish Coat
Poison Injection Tank	Insulation	489	Medium blue 489 #15102
Control Air Aftercooler	Mfr's std paint	None	Light gray 489 #16492
Liquid Waste Evaporator	Primed steel	2a	Aluminum 2a #17178
Vapor Sphere	Aluminum paint	None	Light gray 489 #16492
Reactor Annulus Exhausters	Mfr's std paint	None	Light gray 489 #16492
Vapor Sphere Circulator	Mfr's std paint	None	Light gray 489 #16492
Building Ventilation 60 in. Butterfly Valves	Primed steel	2a	Aluminum 2a #17178
Shield Cooling Filters	Primed steel	489	White 489 #17875
Fuel Storage Pool Heat Exchanger	Primed steel	489	White 489 #17875
Shield Cooling Heat Exchanger	Primed steel	489	White 489 #17875
Shield Cooling Pumps	Mfr's std paint	None	White 489 #17875
Fuel Pool Purification Pumps	Mfr's std paint	None	White 489 #17875
Liquid Waste Transfer Pumps	Mfr's std paint	None	Aluminum 2a #17178
Waste Neutralizer Tank	Primed steel	2a	Aluminum 2a #17178
Liquid Waste Retention Tanks	Primed steel	2a	Aluminum 2a #17178
Demineralized Water Storage Tank	Aluminum	None	None

Table 914-1 (Continued)

	Prime Coat	Undercoat	Finish Coat
Delay Tank	Primed steel	2a	Aluminum 2a #17178
Shield Cooling Surge Tank	Primed steel	2a	Aluminum 2a #17178
Building Ventilation Fans	Primed steel	2a	Aluminum 2a #17178
Air Filter Frame	Primed steel	2a	Aluminum 2a #17178
Instrument Air Dryer	Primed steel	489	Light gray 489 #16492
Seal Water Pump	Stainless steel	None	White 489 #17875
Waste Paper Baler	Primed steel	2a	Aluminum 2a #17178
Control Rod Drive Mech.	Mfr's std paint	None	None
Fuel Storage Racks	Stainless steel	None	None
Fuel Discharge Rotating Shield Assembly	Primed steel	2a	Aluminum 2a #17178
Fuel Pool Spent Fuel Coffin and Carriage	Primed steel	2a	Aluminum 2a #17178
All Motors and Drive Units	Mfr's std paint	None	Same as equip. to which attached
Exterior Tanks			
Acid Storage Tank	Primed steel	2a	Aluminum 2a #17178
Caustic Storage Tank	Primed steel	2a	Aluminum 2a #17178

Table 914-1 (Continued)

	Prime Coat	Undercoat	Finish Coat
Air Conditioning Units Main Control Panel Water Treatment Control Panels Control Rod Relay Cabinet Preheater Control Panel Instrument Racks Laboratory Furniture Metal Toilet Compartments	Factory finish	None	None
Caustic Mixing Station Transfer Pump and Tank	Mfr's std paint	None	Yellow 489 #13655
Reactor Circ. Water Pump Lubrication System			
Oil Pumps	Mfr's std paint	None	Black 489 #17038
Oil Tanks	Primed steel	2a	Aluminum 2a #17178
Turbine Generator	Mfr's std paint	None	Orange #12197
Condenser, Turbine Lube Oil Tank, Turbine Oil Conditioner	Mfr's std paint	None	Aluminum #17178
Condensate Pumps	Mfr's std paint	None	White #17875
Air Ejectors, Condenser Hogging Pump, Turbine Gland Seal Condenser and Exhausters, Service Air Compressor and Receiver Service Air Aftercooler	Mfr's std paint	None	Light gray #16492
Cooling Water Pumps Chemical Feed Pump and Tank	Mfr's std paint	None	Light green #14272
440v and AC-DC Switchgear, 440v and Valve Load Centers, Battery Chargers and Starting Equipment, Generator Neutral Equipment, Surge Protection Equipment, Turbine Control Panel, Hydrogen Control Panel, Turbine Seal Oil Control Panel	Mfr's std paint	None	Factory finish

Table 914-2 PIPING COLOR CODE

Basic Pipe Color	Stripes Color	Stripes No.	Description of Piping
Yellow #13655	Magenta #17142	2	Extraction Steam to No. 1 Heater Extraction Steam to No. 2 Heater Extraction Steam to No. 3 Heater Extraction Steam to No. 4 Heater Superheated Steam Saturated Steam H.P. Safety Valve Vents Turbine By-Pass Piping Steam Sampling Emergency Condenser - Desuperheated Steam
Magenta #17142	Yellow #13655	2	Condensate Resin Sluicing Turbine Drips and Drains Water Sampling Shutdown Cooling Preheating Trap Piping Reactor Circulating Water Reactor Purification Piping Condensate from Poison Inj. Tank and Emerg. Cond. Desup. Heating Coils Feedwater Heater Drains
White #17875	Yellow #13655	1	Reactor Feedwater and Condensate Recirculation
	Magenta #17142	1	Condensate Purification Condensate Pump Discharge High Pressure Reactor Feedwater Seal Water
White #17875	Yellow #13655	1	Shield Cooling Fuel Pool Purification and Cooling
	Magenta #17142	2	
Light Gray #16492	Yellow #13655	1	Head Vent Gasket Leak-off
	Magenta #17142	1	Gas Disposal

Table 914-2 (Continued)

Basic Pipe Color	Stripes Color	Stripes No.	Description of Piping
Aluminum #17178	Yellow #13655 Magenta #17142	1 1	Liquid Waste Disposal Low Level Radioactive Drain and Overflow (Desuperheater, Reactor and Reactor Water Column, Fuel Storage Pool, Gland Seal Condenser, Condensate Resin Regeneration)
White #17875	Dark Green #14110	1	City Water (Building Services)
White #17875	Dark Green #14110	2	City Water (Potable)
White #17875	None		Effluent from cation units (Demineralizer) Degasified Water (Demineralizer) Effluent from anion units (Demineralizer) Effluent from Mixed Bed Unit(Demineralizer) Zeolite Water
Light Gray #16492	None		Salt Water
Light Green #14272	None		Cooling Water Supply and Return
Blue #15102	White #17875	1	Emergency Core Spray
Blue #15102	White #17875	2	Building Spray
Blue #15102	White #17875 Black #17038	1 1	Poison Injection
Blue #15102	None		Fire Protection
Aluminum #17178	None		Make-up Demin. Waste Floor and Equipment Drains (Except as otherwise listed) Sanitary Drains

Table 914-2 (Continued)

Basic Pipe Color	Stripes Color	Stripes No.	Description of Piping
Black #17038	None		Turbine Lube Oil and Turbine Oil Filtering Hydrogen Seal Oil
Yellow #13655	Black #17038	1	Acid Piping (Interior and Exterior Piping)
Yellow #13655	Black #17038	3	Caustic Piping (Interior and Exterior Piping)
Red #11136	Yellow #13655	3	Hydrogen Vent
Red #11136	None		Hydrogen
Light Gray #16492	Yellow #13655	1	Vapor Extractor Vent
Light Gray #16492	Yellow #13655	2	Control Air
Light Gray #16492	Yellow #13655	3	Service Air
Light Green #14272	Black #17038	1	Chemical Feed
Orange #12197	None		All Valve Handwheels
Black #17038	None		Reactor Circulating Water Pump Lube Oil

1000. ENTRANCE BUILDING

1001. GENERAL

The Entrance Building is a conventional type concrete structure located adjacent to the south side of the containment building. Access to the entrance building is from the south, directly from the main parking lot.

This building, in addition to serving as the principal access to the power plant, contains the adminstrative offices, the reactor remote shutdown station, receptionist lobby, change room and conference room.

The building load bearing members are reinforced concrete beams and columns. The exterior and interior walls are concrete blocks with cement plaster on both sides. The roof construction consists of a steel bar joist frame topped with a two (2) inch thick concrete slab over expanded metal matting which is in turn covered with four-ply tar impregnated roofing felt and gravel. The building is completely air conditioned. The general layout of the administration building is shown on Fig. 1001-1.

The Pillbox, the remote reactor shutdown station, is a shielded room with a floor space of approximately 150 square feet. The pillbox is provided and designed to allow personnel to remain near the reactor during an accident to monitor certain plant processes and initiate certain safety actions. Personnel occupying the pillbox during an accident are protected by concrete shielding, face masks, and self-contained breathing apparatus. Full face masks (U.S. Army M-9A1) fitted with AEC high efficiency filters (MAS Ultra-H) are provided. Two "Scott Air-Paks" are provided to give temporary full respiratory protection as needed; each air bottle contains 40 ft^3 of air at 1600 psig which will supply air for approximately 30 minutes.

The concrete wall facing the reactor building is 30 inches thick and the roof concrete slab is 24 inches thick. All other walls have a concrete thickness of 12 inches. The shielding calculations were based on source terms obtained by assuming infinite reactor operation; 30% of the fission products were assumed to be released after 50 seconds, being spread uniformly in the containment building volume. The only attenuation assumed was through the walls of the pillbox.

The maximum dose received in the pillbox in the first 8 hours after the accident is calculated to be 280 mrem, with an 80-mrem increase over the next 8 hours; therefore, personnel occupying the pillbox for the first 16 hours would receive 0.36 rem, only a small fraction of the 25-rem emergency exposure limit. The dose rate outside the pillbox after 7 hours is 20 rem per hour.

The pillbox houses the control panel containing reactor instruments for remote reactor shut down and is the emergency station for initiating

core and building spray; for details of the instrumentation on the pillbox control panel, refer to section 803.

Stations for the plant paging system, the plant maintenance communication system, and the out-of-plant telephone system are located in the pillbox. A plant paging telephone is mounted on the edge of the pillbox control panel for communication with stations in the containment building, in other rooms of the entrance building, and in the switchyard. A telephone jack for the plant maintenance system is located on the pillbox control panel for communication with maintenance stations in the containment building, in other rooms of the entrance building, and in the switchyard. The out-of-plant telephone is mounted on a wall of the pillbox and is connected to the public telephone system.

The lobby, administration office, secretary's office, clerks' office and the conference room are air conditioned with individual window type air conditioners of approximately 1.5 ton capacity each. The operators' change room and sanitary rooms are provided with ample window areas for natural ventilation. The reactor shutdown station is force ventilated by a 1500 cfm wall type propeller fan mounted above the entrance door. This fan will establish circulation of cool air from the administration office into the pillbox and back through fixed louvers in the lower part of the door. The air conditioning system is designed to maintain all areas at 76°F dry bulb, 65°F wet bulb and a relative humidity of 55 per cent.

General illumination is by fluorescent lamp, ceiling recessed, fixtures designed to give an average of 50 foot candles in the administration office, conference room and offices. The lobby lighting is designed to give 30 foot candle intensity.

Other lighted areas, such as the shower room, change room, and sanitary room, have incandescent lighting. The foot candle intensity in these areas averages 20.

The shielded room lighting fixtures are the surface mounted, fluorescent type, and yield approximately 50 foot candles of illumination.

The corridor leading to the reactor building contains, in addition to the normal a-c ceiling lighting, emergency battery operated portable lamps.

Two separate sanitary sewerage systems are required and provided: one to handle potentially radioactive liquid wastes from the operator's change room lavatory, sink, washing machine and showers, and the other for non-radioactive sanitary liquid and solid wastes from the lavatories, urinals, and water closets in the other sanitary rooms. The former is discharged into two 1530 gallon radioactive waste hold-up tanks, located underground and outside the west side of the building. Samples are taken periodically through the tank removable vent covers and a radio-

active assay conducted before the liquid is finally discharged to the sea through a 4-in. pipe, near the discharge chamber structure.

The latter non-radioactive sanitary system is of standard plumbing design in accordance with acceptable building code practice and discharges into a concrete septic tank. Due to the fact that the sewage percolation around the septic tank is low, an absorption field is incorporated. A removable vent cap on the distribution box into which the effluent from the septic tank discharges is provided to permit taking periodic samples for radioactive analysis.

For extinguishing fires that may develop within the entrance building, two fire hose cabinets (Fyr-Fyter Model 470) are installed, one in each hall. Each cabinet has 100 ft of 1-1/2-in. hose and a 2-1/2-gal soda-acid portable fire extinguisher.

The entrance building is provided with public telephones which connect with the island and continental telephone service. In addition microwave telephone channels are installed which connect to the PRWRA private telephone system for load dispatching and other operating message service.

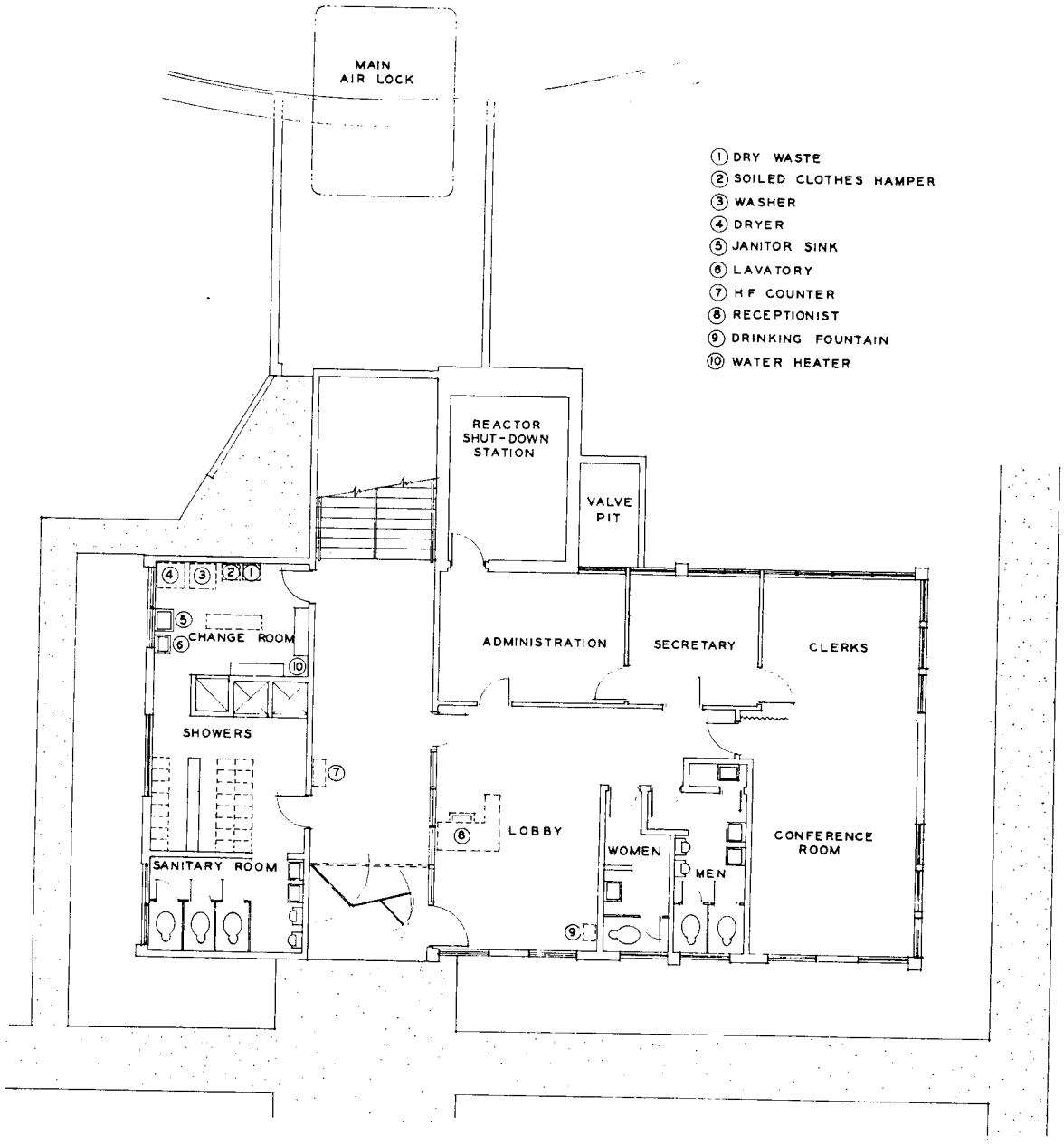

Fig. 1001-1 Layout of entrance building.

1100. SITE SERVICES AND STRUCTURES

1101. GENERAL

Figure 1101-1 shows the service facilities and structures that are located outside the containment and entrance buildings and within the site property fence boundary of the station. They consist of the entry access road and internal streets, street lighting, parking facilities, fences, storm and sanitary sewers, transformer and switchgear yards, outdoor diesel generator, water storage and fire protection tanks, fire hydrants, cooling tower, sea water circulating system components and structures, and the radioactive liquid waste storage tanks. Other structures within the site boundary are the chlorination plant for the circulating water system, the zeolite treatment plant for the raw water supply system, the tanks for the storage of caustic and sulfuric acid, and the caustic mixing shed.

The power plant site is enclosed by a 6-ft-high, galvanized steel chain-link fence with one foot high barbed wire at the top; entry to the site is through a 24-ft-wide, swing-type double gate, motor operated from the entrance building. Copper grounding rods, 1/2 in. dia. x 8 ft long, are set below grade 18 in. and spaced 40 ft apart along the fence line. The chain link fence is grounded to these rods with No. 4 AWG cable. The property boundary line which defines the site exclusion area and which is equivalent to slightly greater than 0.3 mi. radius, is enclosed by a 5190-ft-long barbed wire fence anchored to concrete posts.

A. Roads and Parking Area

An asphalt access road suitable for trailer truck use, .66 mi. long, 26 ft wide, maximum grade 3%, leads from the existing state road No. 413, through the site entry gate and terminates in the site parking lot area. Three 36-in. and one 48-in. reinforced concrete pipe culverts are installed under the road bed between the state road and the entrance gate for drainage of rain runoff to the nearby beach. The streets from the parking area (el. 23 ft-0 in.) leading in front of the entrance building (el. 25 ft-0 in.) to the freight door truck loading area (el. 19 ft-12 in.), and leading past the emergency air lock (el. 36 ft-0 in.) to the cooling tower (el. 35 ft-0 in.) and transformer and switchgear yards (el. 30 ft-0 in.) are 30 ft wide and have a crushed stone base topped with bituminous asphalt and concrete curbs. The parking lot is similarly constructed and can accommodate a total of 30 cars; 22 in the parking area to the west of the entrance building and 8 in the parking spaces to the east. An 18-ft-wide road leads from the north side of the switchyard area where the access gate is located to the chlorination plant and the sea water intake structure containing the circulating water pumps and associated equipment (el. 12 ft-0 in.).

B. Site Drainage

Drainage is provided for the 12-acre area surrounding the power plant building. Natural runoff from most of this area flows to the southwest. An earth diversion channel is provided immediately to the

east of the switchyard area and a larger one to the south. Water collected in this channel flows under the access road through a 48-in. reinforced concrete pipe culvert towards the sea. The streets adjacent to the power plant are provided with catch-basins and concrete pipes to collect the storm water runoff from the building and surrounding terrain. To determine the amount of rain runoff to be disposed of the formula Q = CIA was used where Q is the disposal rate in ft^3/sec, I the rain fall rate in in./hr, C a constant, and A the drainage area in acres. The catch-basin and connecting culvert system are designed for an I value of 3.5 in./hr and C = 0.60. The rain runoff in the vicinity of the freight-door (el. 19.12 ft) is disposed of through a catch-basin which extends the width of the street at elevation 17 ft,0 in. An 18-in. reinforced concrete culvert, connected to the catch-basin, extends 373 feet where it discharges at el. 12 ft, 0 in. into the drainage channel south of the site.

C. Transformer Yard and 38 kv Switchyard

The transformer yard and the 38 kv switchyard are located east of the containment building at elevation 30 ft, 0 in., as shown on Fig. 1101-1. The top of the concrete foundations for the tower structures and the outdoor electrical devices in both areas is at elevation 30 ft, 6 in. The transformer yard and switchyard are each separately enclosed by a 6-ft high, galvanized steel, chain-link fence.

The main power transformer, station service transformer, 440 volt outdoor switchgear, which provides electric power to equipment outside the containment building, and associated current transformers, potential transformers and disconnect switches all described in Section 601 are located in the transformer yard. The glavanized steel structures are designed for line tensions of 2000 lbs/wire and a wind loading of 50 lbs/sq ft. The structures are equipped with lightning arresters and 46 kv bus suspension insulators.

The three 1500-mva, 1200-ampere, 46-kv, outdoor oil circuit breakers described in Section 601 are mounted, with their associated current and potential transformers, disconnect switches and galvanized steel structures — that dead end the Aguada and Rincon 38 kv transmission lines and the main power and station service transformer feeders — are all located in the 38 kv switchyard.

D. Water Supply and Storage System

The water storage and supply piping system outside the containment building, shown schematically on Fig. 1101-2, for plant makeup, for fire protection inside and outside the containment building, for the building internal and external spray systems and for the reactor emergency core spray system is designed in accordance with the requirements of Factory Mutual Engineering Division Standards for Improved Risk. A study of the plant makeup water requirements indicated that a flow rate of 35 gpm is required; however, the water supply system has been designed to furnish 50 gpm to provide for contingencies and peak demands.

The main source of raw water for the above makeup, supply, and storage systems is Well No. 3 located 657 ft south and 293 ft west of the containment building center. This non-potable water is withdrawn from the 60-ft deep well at a flow rate that is not to exceed 25 gpm during any 16-hr period so as to minimize the entry of sea water into the raw water supply system. The deep well pump is driven by a 7-1/2 hp, 440 volt, 3 phase, 60 cycle motor and discharges into a 5-ft 6-in.-dia., 5000-gallon steel suction tank, mounted in the southeast corner of the site at grade elevation 18 ft-0 in. The pump has a rated capacity of 5000 gph at 80 psig discharge pressure; at 25 gpm the corresponding pump outlet pressure is 400 ft of water.

The well water source is supplemented by the water from the 93,000-gallon capacity Rincon City Aqueduct 13,000 ft from the site. The water supply from this source, which is discharged into the same tank, is limited to a maximum of 50 gpm. Two horizontal centrifugal pumps with cast iron casing and bronze impeller, each rated at 50 gpm at 200 ft total dynamic head and driven by a 7-1/2 hp, 440 v, 3 phase, 60 cycle, totally enclosed motor, take their suction from the tank and supply raw water to the outside fire hydrant system and interconnected 50,000-gallon total storage capacity tanks at grade elevation 194 ft-0 in., and to the zeolite treatment plant as shown on Fig. 1101-2. The electrical control systems for the deep-well pump which automatically maintains the 5000-gallon suction tank level constant and the booster pumps which automatically hold the water level in the two overhead 25,000-gallon tanks at a fixed level are shown schematically on Figs. 1101-3 and 1101-4, respectively.

The zeolite treated water for the plant makeup water demineralizers and for the auxiliary cooling water chemical treatment system — both of which are inside the containment building — and the makeup water for the outdoor cooling tower is stored in a 25,000-gallon storage tank mounted at grade elevation 40 ft at the northeast corner of the site. Tank mounted, float operated switches stop the pumps if the tank level is too low, as shown on Fig. 1101-5, the schematic electric control diagram for the locally started, 60 gpm, 200 ft total dynamic head, 7-1/2 hp, 440 v, 3 phase, 60 cycle, motor-driven zeolite water pumps. A pneumatic valve, pilot solenoid operated, in the suction line to the tank regulates the tank water level within prescribed limits.

The water storage tanks for fire protection inside the containment building described in Section 911, and the emergency reactor core spray described in Section 411, are located at grade elevation 174 ft-0 in., 1116 ft from the center of the containment building at two locations 300 ft apart. At each location there are two (2) 25,000-gallon tanks giving a total water storage capacity of 100,000 gallons for fire fighting within the building and for the reactor core spray. Separate underground 12-in. steel pipe lines are run from each group of tanks to the vicinity of the containment building where they are cross-tied to permit either tank to serve as the water supply for the required services; separation of the tanks and discharge lines is done to improve

the chance that one of the two tank systems is available after an earthquake. These tanks are supplied water by gravity flow from the two 25,000-gallon overhead storage tanks which also supply water to the external fire protection system.

The outdoor fire protection system, shown schematically on Fig. 1101-2, consists of a 6-in. mechanical joint, pipe ring header containing five (5) fire hydrants and post indicator valves. The header is connected by a 6-in. cast iron, mechanical joint, pipe line to the two 25,000-gallon storage tanks at grade elevation 194 ft, 0 in. From this same ring header water for fire fighting is piped to the cooling tower, and the storage warehouse sprinkler systems. The sanitary systems within the containment and entrance buildings also receive their water supply from this same ring header.

Drinking water for the fountains in the containment and entrance buildings is supplied through a 1-in. underground line connected to a 25,000-gallon, ground mounted storage tank located on the south boundary of the site; the supply to the tank is from the Barrio Puntas Aqueduct. The drinking water system has been designed such that it can supply water, if required for emergency purposes, to the raw water system.

E. Cooling Tower

The heat absorbed by the auxiliary cooling water system, described in Section 509 and shown schematically on Fig. 509-1, is rejected to the cooling tower located to the north of the containment building. The tower (Lilie-Hoffmann Cooling Towers, Inc., Model SM-8941, Size 19' x 19' x 11'), is a heavy-duty, induced-draft, single-casing type with redwood filling and eliminators; 3/8-in. corrugated cement asbestos casing and removable louvers; and galvanized steel ladder, handrails, and supports. The hot water enters the top of the tower (8 ft above the basin top) through a 6-in. flanged galvanized pipe distribution header containing lateral branch pipes with plastic non-clogging spray nozzles. The unit is 11 ft, 4 in. high to the deck and 14 ft, 1 in. high over-all, and is mounted on top of a 3-ft deep, 19-ft square, concrete basin. The tower and structural supports are designed to withstand wind loads of 50 psf.

The design conditions for the tower are listed in Table 1101-1.

Water circulated, gpm	700
Inlet hot water, ^{o}F	105
Outlet cold water, ^{o}F	85
Wet bulb, ^{o}F	79
Drift loss, gpm	1.4 (.2%)
Evaporation loss, gpm	13.3 (.95%)
Makeup water, gpm	14.7 (not including blowdown)

The 10-ft-dia., 6-blade, cast aluminum, adjustable pitch, 362 rpm fan has a protective wire mesh guard and is driven through a speed reducer by a 15 hp, 1750 rpm, 440 v, 3 phase, 60 cycle, totally enclosed, fan cooled motor mounted outside the fan ring. Since the cooling tower serves as the heat sink for the plant auxiliaries, the power supply for the fan is motor control center No. 2 which is backed-up by the emergency generator. Fig. 1101-6 shows schematically the electrical controls for the cooling tower fan.

Makeup water to the tower to compensate for drift, evaporation, and blowdown losses, is zeolite treated water, and is automatically regulated to maintain the level in the basin at a constant level by a pneumatic level control valve. Abnormal basin levels are annunciated in the control room; two float operated level switches, mounted on the basin are provided for this purpose.

The tower water is chemically treated to minimize delignification of the tower, corrosion, scale, slime and algae formation, and to control the pH within the range 10 - 11. **The chemical equipment for injecting** sodium hexametaphosphate, sulfuric acid, and sodium hypochlorite to the cooling tower water — the 100-gallon, stainless steel mixing tank, and the 5-gph, constant-displacement, 1/4-hp motor-driven Milton Roy diaphragm-type chemical feed pump — are both located inside the containment building. **The electrical controls for the locally operated** chemical feed pump are shown schematically on Fig. 1101-7.

F. Sea Water Structures and Tunnels

The sea water intake and discharge structures, and the 42-in. reinforced concrete pipe lines leading from the rectangular channels under the containment building foundation mat to the structures are located to the west of the containment building. This system is designed to convey 17,000 gpm of sea water to the condenser and back. The sea water outlet structure is located 417 feet along the shore line away from and southwest of the sea water intake structure. **The intake** structure is made of 5000 psi strength reinforced concrete and is 60 feet long by 16 feet wide. **The structure is erected 47 feet inland** from the seashore to provide protection from sea waves. **The inlet** channel to the intake structure has sheet pile sides with top at elevation 4 ft-0 in., and an 18-in.-thick reinforced concrete slab bottom 5.5 feet below mean sea level. **The reinforcement of the floor slab is** welded to the sheet piling and the slab and walls are made heavy enough to resist buoyancy. Reinforcing steel is given 3 in. concrete cover to protect it from sea water.

The intake structure is equipped with standard stop logs, trash racks, and traveling water screens. The maximum velocity through the screens is 2.24 fps with the intake water level at a depth of 4.5 feet above the channel floor. **The two condenser circulating water pumps,** described in Section 504, are mounted on the intake structure and discharge into a 42-in. reinforced concrete water pipe. **These pipes are**

designed to withstand 50 feet hydrostatic head and a maximum earth cover of 26 feet. The joints connecting the pipe sections are made with steel bands and rubber gaskets. Where the intake and discharge pipes pass under the street to the west of the plant the pipes pass through 60-in.-minimum-dia., 3-in.-thick, concrete tunnels; the space between the pipes and the tunnel are filled with grout. The discharge pipe design and construction is the same as for the inlet pipe.

The outlet structure is made of reinforced concrete and protected on the front and sides by sheet piling. It is 25 feet long and 5 feet wide. The bottom of the outlet near the end of the pipe is at elevation ± 4 ft-6 in., while the pipe invert is at elevation -2 ft-0 in. This arrangement was made in order to maintain the pipe full of water in order to prevent air entering and breaking the siphon at the discharge pipe.

At the place where the circular pipes join the rectangular channels below the containment building floor slab, a transition section of reinforced concrete is provided. In the transition section with inverts at elevation ± 6.4 ft there are installed two cast iron pressure manholes. Access to these manholes is through a reinforced concrete vertical shaft 7 ft-9 in. long by 4 ft-0 in. wide and which extends up to elevation ± 35 ft. Ladders are installed on one side wall of the manhole shaft. The top of the shaft is covered with galvanized safety steel plates.

A chlorination plant is erected near the intake structure at elevation ± 12 ft-0 in. for the injection of chlorine to control marine growth in the sea water circulating system. The plant equipment is installed in a steel frame building with asbestos-cement sheet roof and siding.

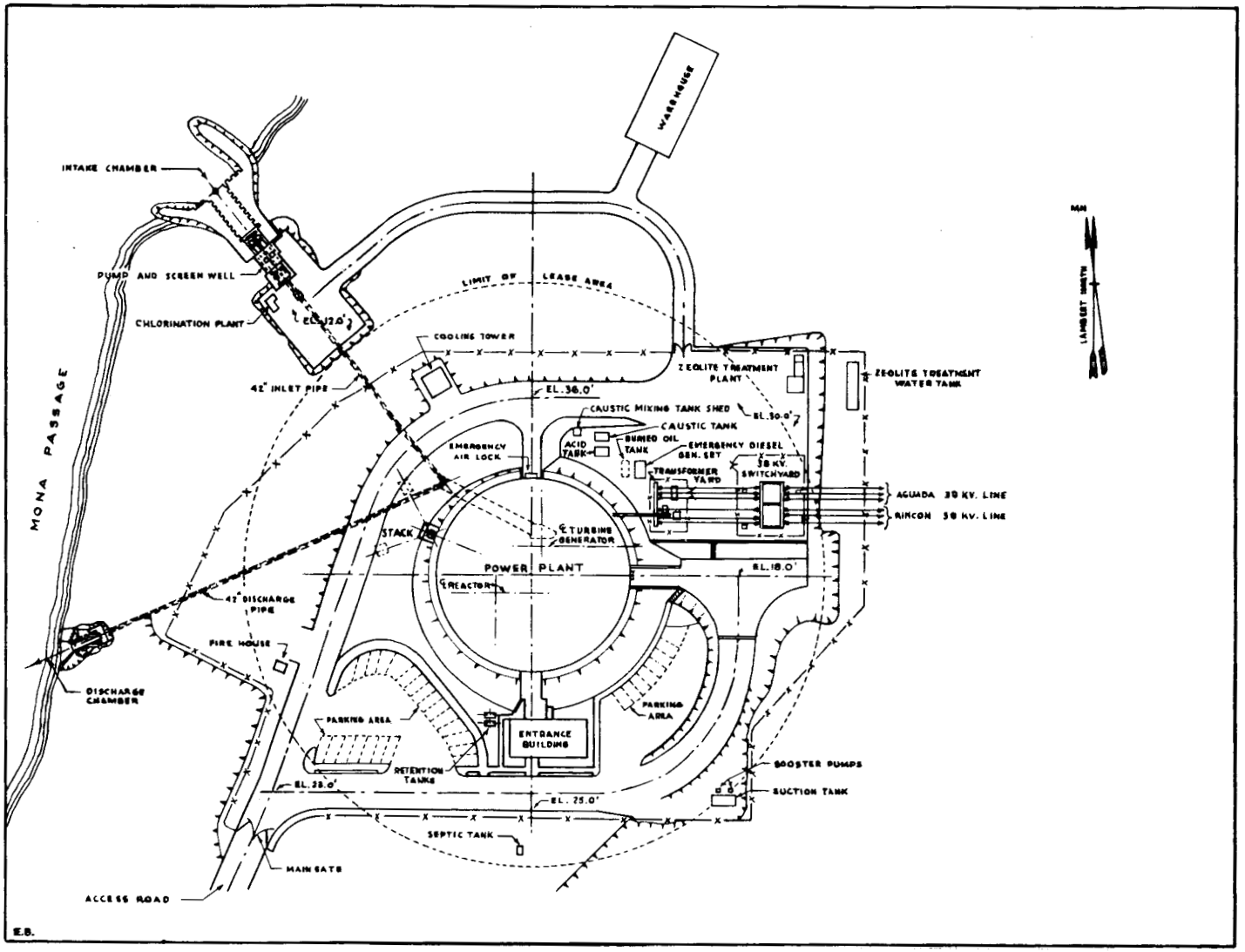

Fig. 1101-1 Site plan.

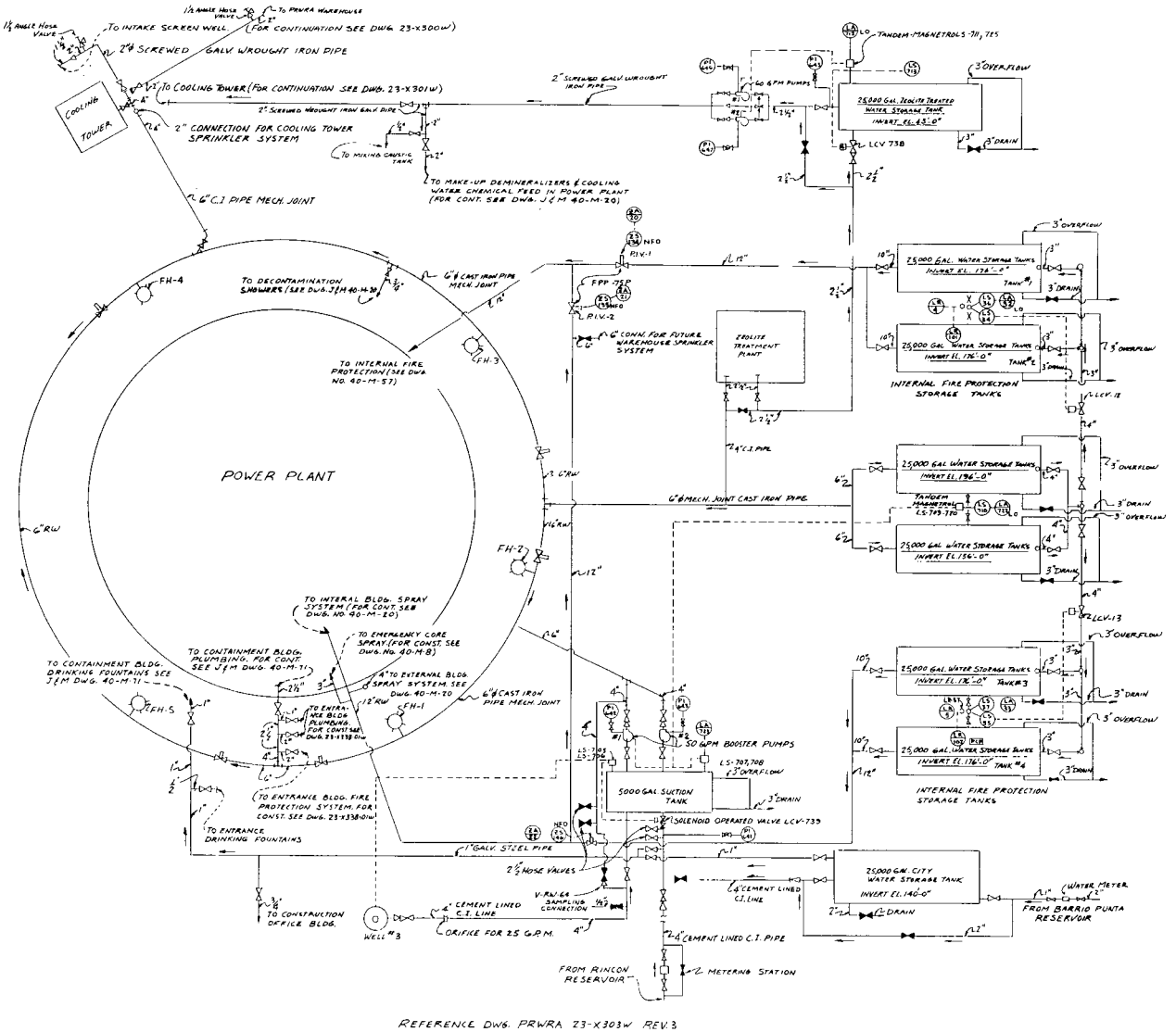

Fig. 1101-2 Schematic flow diagram of water make-up, storage and fire protection systems.

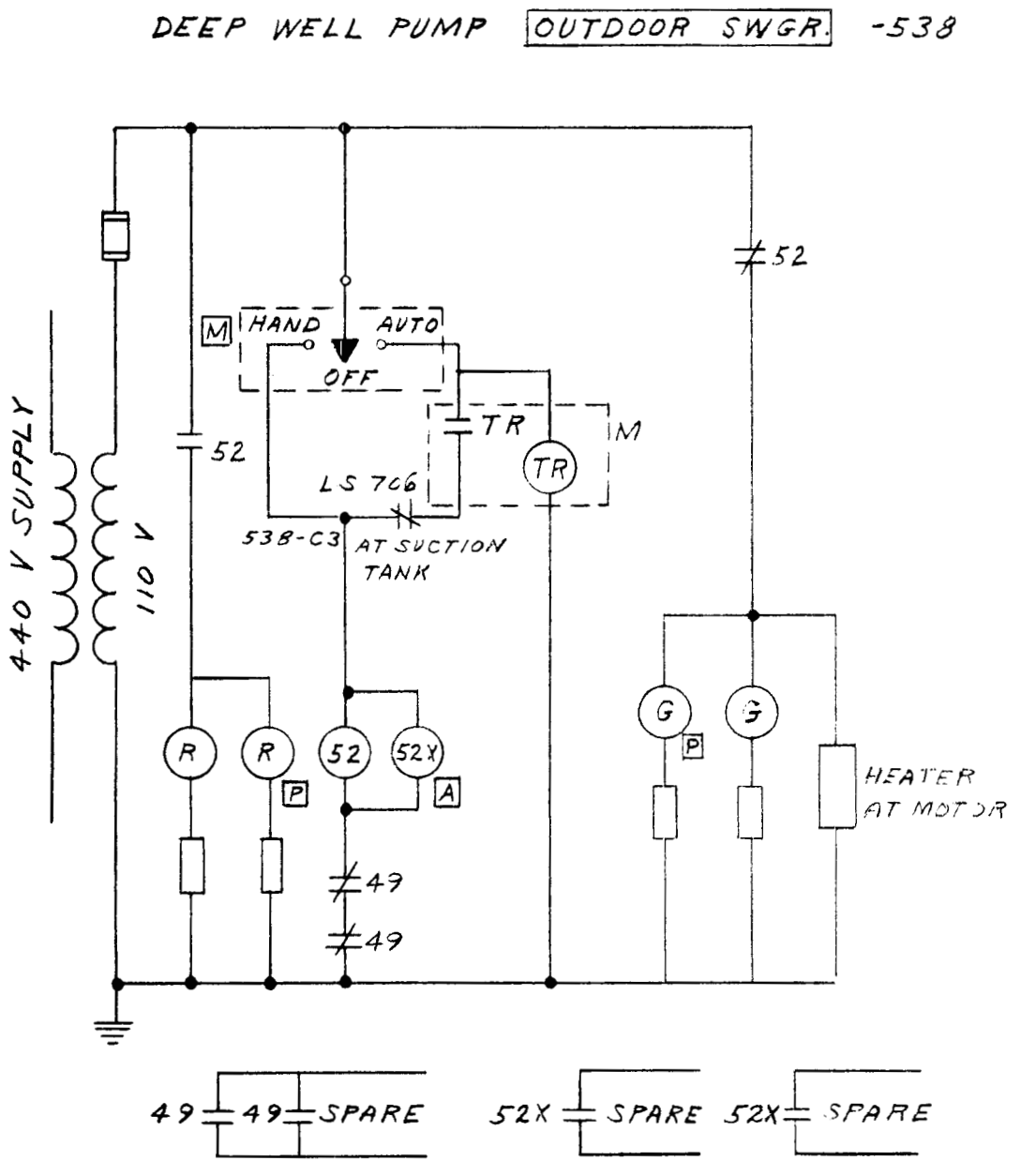

REFERENCE DWG. PRWRA 23-X 406.02 W REV. 2

Fig. 1101-3 Schematic electric control diagram for deep well pump.

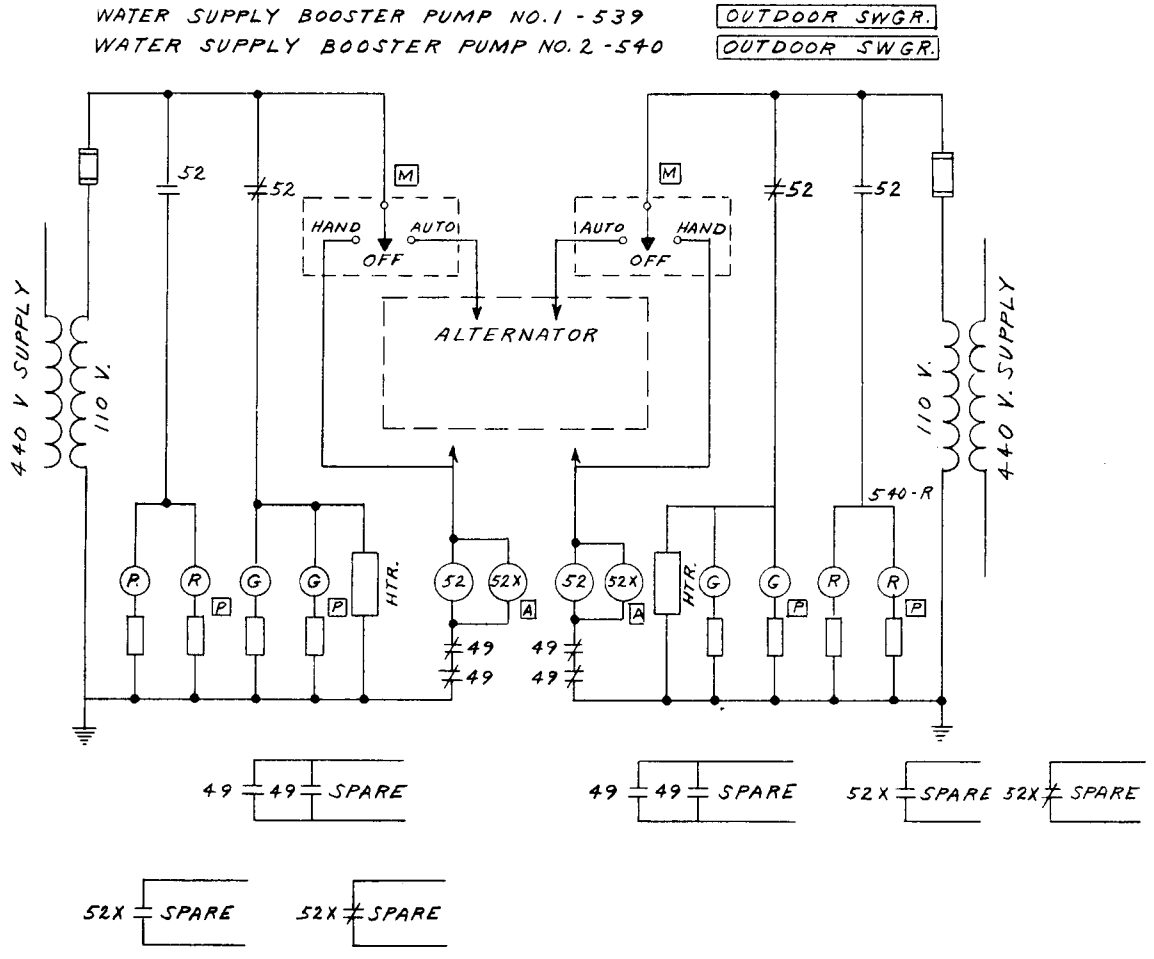

REFERENCE DWG. PRWRA 23-X 406.02 W REV. 2

Fig. 1101-4 Schematic electric control diagram for raw water booster pumps.

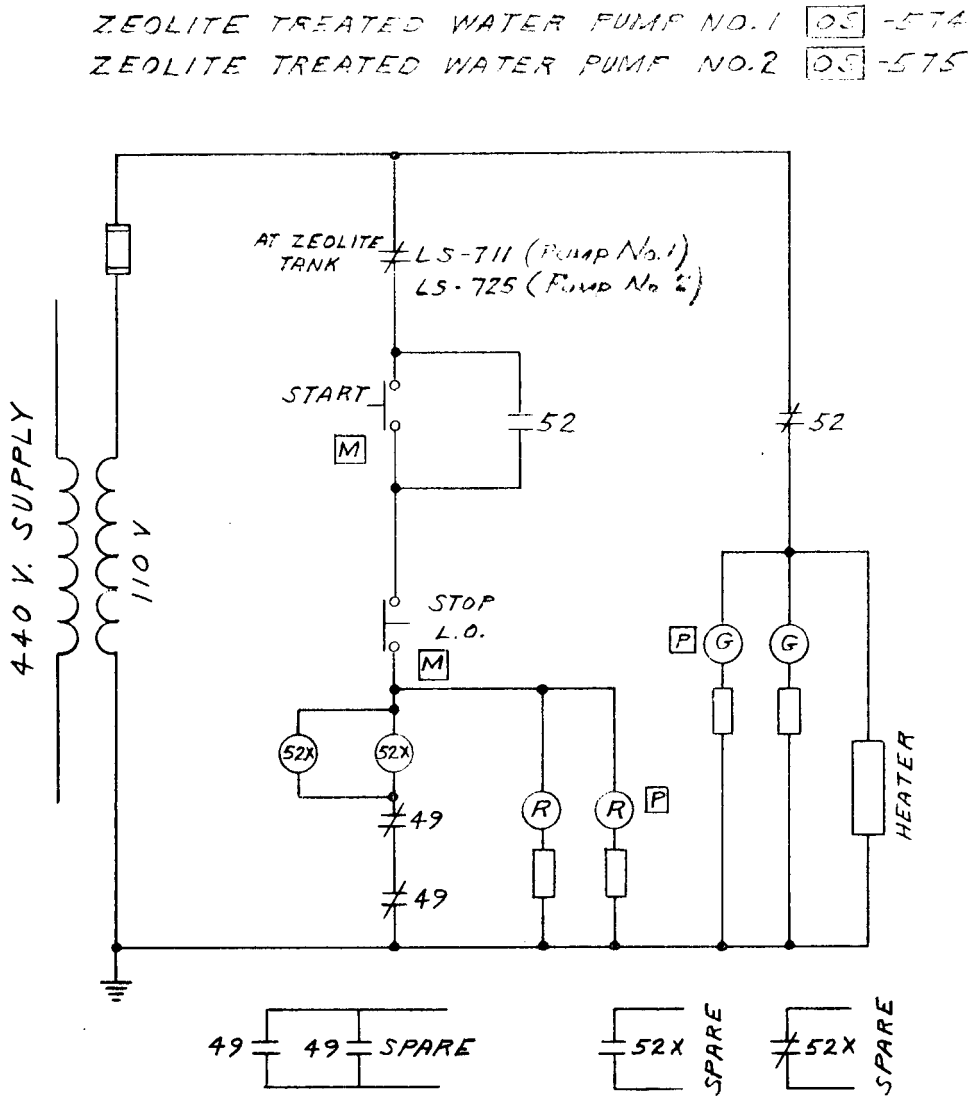

Fig. 1101-5 Schematic electric control diagram for Zeolite water pumps.

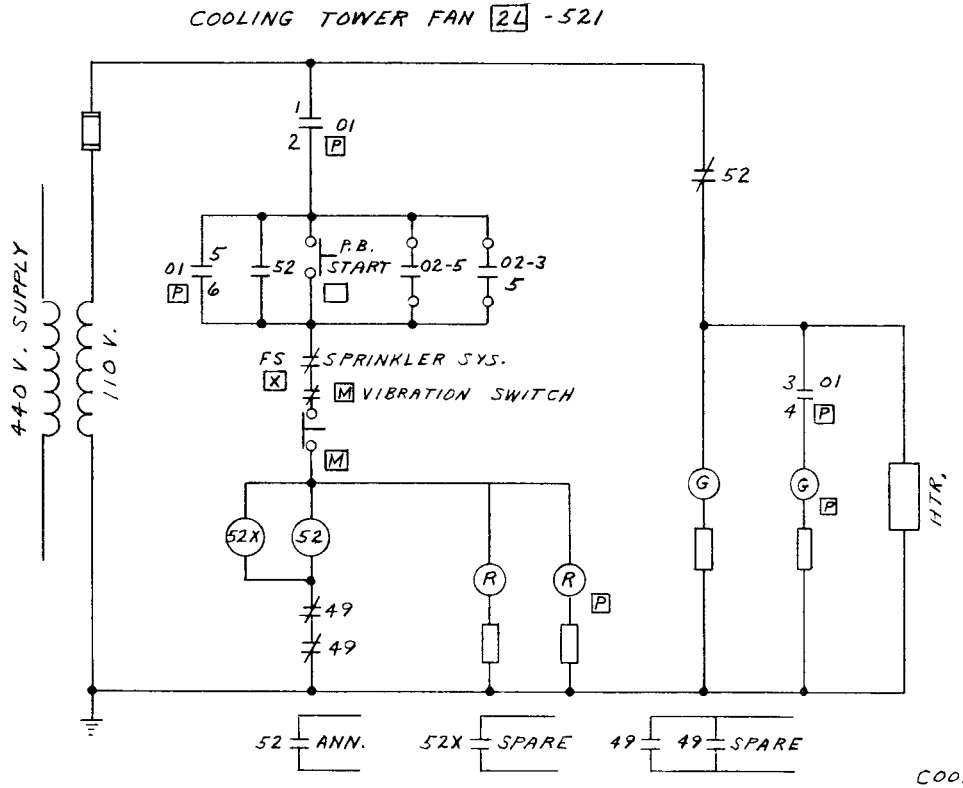

REFERENCE DWG. PRWRA 23-X 406.01 W REV. 2

COOLING TOWER FAN
CONTROL SWITCH DEVELOPMENT

CONTACTS HANDLE END	POSITIONS			
	START	NORM.	STOP	L.O. ON STOP
1 - 2	X	X		
3 - 4	X	X	X	
5 - 6	X			
7 - 8	X			

X DENOTES CONTACT CLOSED.-
SPRING RETURN TO NORMAL.-
TO L.O. TURN TO STOP & PULL OUT

Fig. 1101-6 Schematic electric control diagram for Cooling Tower Fan.

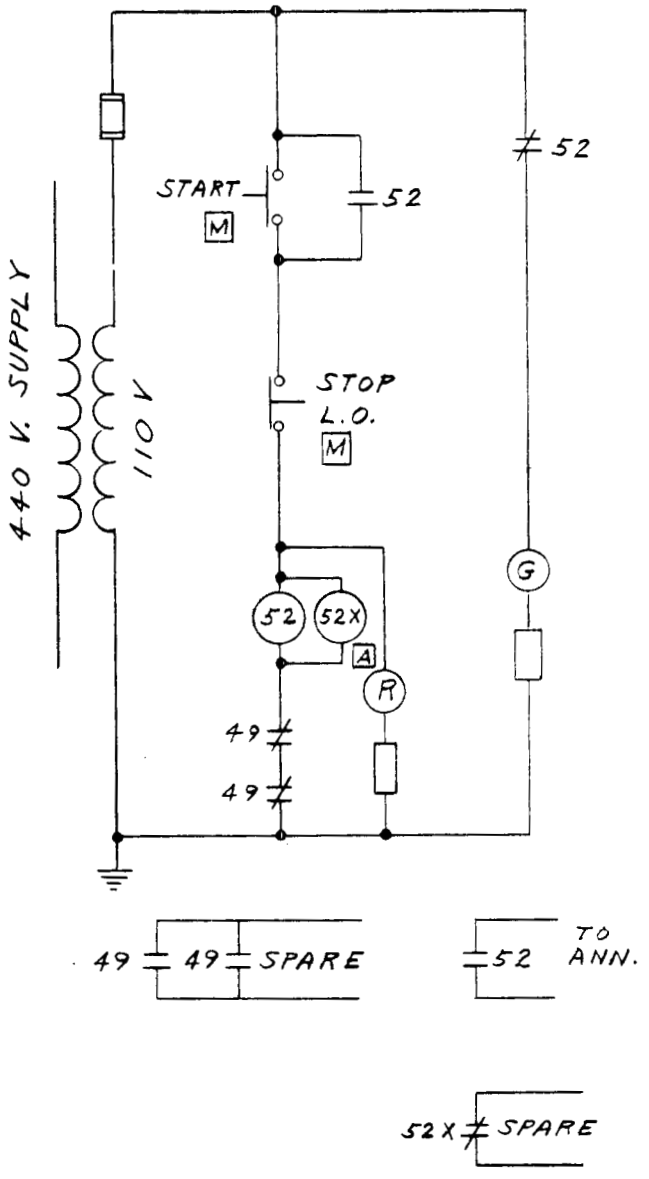

Fig. 1101-7 Schematic electric control diagram for Cooling Tower Water Chemical Feed Pump.

1200. DESIGN DRAWINGS AND SPECIFICATIONS

1201. DESIGN DRAWINGS

(Latest Drawing Revision is Applicable)

A. General Nuclear Engineering Corporation

Drawing No.	Title
66-M-1	Vertical Section Through Reactor
66-M-2	Horizontal Section Through Reactor
66-M-9	Control Rod Drive Assembly
66-M-10	Reactor Pressure Vessel
66-M-11	Control Rod Thimble
66-M-15	Startup Source Neutron Assembly and Details
66-M-16	Superheater Nozzles, Orifices and Fittings
66-M-19	Reactor Core Structure Assembly Perspective
66-M-20	Reactor Core Structure Assembly
66-M-21	Core Plate and Attachments
66-M-22	Baffle Support and Emergency Cooling Pipes
66-M-23	Control Rod Guide Structure Assembly
66-M-24	Control Rod Guide Structure Assembly Sections
66-M-25	Control Rod Guide Structure Upper and Lower Panel Subassemblies
66-M-26	Control Rod Guide Structure Panel Details
66-M-27	Control Rod Guide Structure Boxes
66-M-28	Control Rod Guide Structure Assembly Components
66-M-29	Superheater Spacer Assembly and Other Core Structure Components
66-M-30	Boiler Fuel Assembly
66-M-31	Natural Boiler Fuel Bundle and Fuel Rod Subassemblies and Details
66-M-32	Enriched Boiler Fuel Bundle and Fuel Rod Subassembly and Details
66-M-33	Boiler Fuel Outer Shell and End Fittings
66-M-34	Perspective Drawing of Enriched Boiler Fuel Assembly
66-M-36	Boiler Fuel Holddown Assembly
66-M-37	Boiler Fuel Holddown Tool Details
66-M-39	Superheater Fuel Assembly Perspective
66-M-40	Superheater Fuel Assembly and Connector Pipe Arrangement
66-M-41	Superheater Connector Pipe Subassembly
66-M-42	Superheater Connector Components Subassembly and Details
66-M-43	Superheater Standpipe Subassembly and Details
66-M-44	Superheater Fuel Subassembly
66-M-45	Superheater Shell Subassembly
66-M-46	Fuel Rod and Coolant Tube Subassembly
66-M-47	Superheater Box Fittings
66-M-48	Superheater Shell Components
66-M-49	Superheater Protective Shroud and Lower End Fitting
66-M-50	Cruciform Control Rod Assembly

Drawing No.	Title
66-M-51	Slab Control Rod
66-M-53	Superheater End Wedge Assembly and Details
66-M-54	Boiler and Boiler-Superheater Shims Assemblies and Details
66-M-55	Steam Dryer Preheater General Assembly
66-M-56	Steam Dryer Structure Details
66-M-57	Steam Preheater Assembly and Details
66-M-58	Steam Preheater Outlet Pipe Details
66-M-59	Steam Preheater Inlet Pipe Details
66-M-60	Shield Tank Assembly
66-M-61	Shield Tank Details
66-M-63	Steam Preheater Coupling Assembly and Details
66-M-64	Instrument Thimble Assembly
66-M-70	Bottom Shield Plug Assembly
66-M-71	Bottom Shield Plug Details Parts 1, 6 and 7
66-M-72	Bottom Shield Plug Details Parts 2, 3, 8, 4, 11
66-M-73	Bottom Shield Plug Details Parts 4 and 5
66-M-74	Steam Dryer Component Details
66-M-75	Removable Shield Structures Assembly
66-M-76	Removable Shield No. 1
66-M-77	Removable Shield No. 2
66-M-78	Removable Shield No. 3
66-M-79	Miscellaneous Shield Details
66-M-80	Fuel Coffin and Carriage Assembly
66-M-81	Fuel Coffin Assembly
66-M-82	Fuel Coffin Sliding Plug and Seal Details
66-M-83	Fuel Coffin Top Plug and Bracket Details - Sh. 1
66-M-83	Winch Assembly and Details - Sh. 2
66-M-84	Fuel Coffin Shell Details
66-M-85	Fuel Coffin Carriage Assembly
66-M-86	Fuel Coffin Carriage Bridge Frame Details
66-M-87	Fuel Coffin Carriage Trolley Frame Details
66-M-88	Fuel Storage Well Loading Chute and Lead Shield Plates
66-M-90	Fuel Discharge Rotating Shield Assembly
66-M-91	Outer Carrier Ring Details
66-M-92	Large Plug Carrier Inner Ring
66-M-93	Gear and Bearing Details
66-M-94	Small Plug Carrier and Plug Details
66-M-95	Fuel Storage Racks
66-M-97	Fuel Handling Tool
66-M-101	Elevation of West Half of Reactor Biological Shield
66-M-102	Plan Below El. 58', 10" of Reactor Biological Shield
66-M-103	Bottom Plate Support, Shot Trough and Shot Trough Cover Plate Details (Reactor Biological Shield)
66-M-104	Top, Bottom and Cover Plate Details of Lining for North and South Tunnels (Reactor Biological Shield)
66-M-105	Top Plate Details of Lining for North Tunnel (Reactor Biological Shield)

Drawing No.	Title
66-M-106	Bottom Plate and Support Details of Lining for North Tunnel (Reactor Biological Shield)
66-M-107	Corner Plate Details of Lining for North Tunnel (Reactor Biological Shield)
66-M-108	Lower Shell and Apron Structure Details of Lining for Pressure Vessel Annulus (Reactor Biological Shield)
66-M-109	Upper Shell Structure Details of Lining for Pressure Vessel Annulus (Reactor Biological Shield)
66-M-110	Control Rod Drive Trench Assembly
66-M-111	Control Rod Drive Trench Details
66-M-112	Miscellaneous Details of Control Rod Drive Trench Structure
66-M-113	Turbine Shield Assembly
66-M-114	Turbine Shield Details
66-M-115	Waste Transfer Cask Assembly and Schematic of Operations
66-M-116	Waste Transfer Cask Details
66-M-124	Superheater Standpipe Cutter Assembly
66-M-125	Superheater Standpipe Cutter Details
66-M-126	Superheater Standpipe Cutter Details
66-M-127	Superheater Standpipe Cutter Details

B. Jackson & Moreland, Inc.

1. Mechanical

Drawing No.	Title
40-M-1	Equipment Location Plan Basement Floor
40-M-2	Equipment Location Plan Main Floor
40-M-3	Sectional Elevation Looking North
40-M-4	Sectional Elevation Looking West
40-M-7	Legend
40-M-8	Flow Diagram Shield Cooling and Emergency Core Spray
40-M-9	Station Heat Balance
40-M-10	Flow Diagram - Main Steam and Extraction Steam
40-M-11	Flow Diagram - Heater Vents and Drains, Miscellaneous Drains, and Control Air
40-M-12	Flow Diagram - Condensate, Reactor Feedwater, and Condensate Purification
40-M-14	Flow Diagram - Gas Disposal System
40-M-15	Flow Diagram - Sampling
40-M-17	Flow Diagram - Poison Injection and Emergency Condenser Systems
40-M-18	Flow Diagram - Reactor Circulating Water, Purification, Shutdown Cooling and Preheating
40-M-19	Flow Diagram - Fuel Storage Pool Purification and Cooling
40-M-20	Flow Diagram - Demineralized Water and Building Spray
40-M-21	Flow Diagram - Liquid Waste Handling, Floor and Equipment Drainage
40-M-27	Condensate and Reactor Feedwater Piping - Sh. 1
40-M-28	Condensate and Reactor Feedwater Piping - Sh. 2
40-M-34	Control Air Piping at Compressor
40-M-39	Cooling Water Piping
40-M-44	Trap Piping
40-M-46	Extraction Heater Drain and Vent Piping
40-M-53	Floor and Equipment Drains - Sh. 1
40-M-54	Floor and Equipment Drains - Sh. 2
40-M-57	Fire Protection - Building - Sh. 1
40-M-58	Fire Protection - Building - Sh. 2
40-M-59	Fire Protection - Building - Sh. 3
40-M-61	Welding End Preparation Standard
40-M-63	Piping Schedule
40-M-71	Plumbing - Sh. 1
40-M-72	Plumbing - Sh. 2
40-M-73	Plumbing - Sh. 3
40-M-76	Building Spray Piping
40-M-77	Fuel Storage Pool Purification and Cooling Piping
40-M-78	Liquid Waste Disposal Piping - Sh. 1
40-M-79	Liquid Waste Disposal Piping - Sh. 2
40-M-80	Reactor Circulating Water Piping
40-M-81	Reactor Emergency Condenser and Poison Injection Piping - Sh. 1

Drawing No.	Title
40-M-82	Reactor Emergency Condenser and Poison Injection Piping - Sh. 2
40-M-84	Reactor Purification, Shutdown Cooling and Preheating Piping
40-M-86	Reactor Shield Cooling and Core Spray Piping - Sh. 1
40-M-87	Reactor Shield Cooling and Core Spray Piping - Sh. 2
40-M-91	Steam and Water Cycle Sampling Piping
40-M-94	Sealing Water Supply and Return Piping
40-M-98	Pipe Sleeves - Sh. 1
40-M-99	Pipe Sleeves - Sh. 2
40-M-100	Building Mechanical Penetrations
40-M-103	Main Steam Piping - Sh. 1
40-M-104	Main Steam Piping - Sh. 2
40-M-105	Main Steam Piping - Sh. 3
40-M-106	Extraction Steam Piping - Sh. 1
40-M-107	Extraction Steam Piping - Sh. 2
40-M-111	Tanks - Sh. 1
40-M-112	Tanks - Sh. 2
40-M-115	Ventilation - Sh. 1
40-M-116	Ventilation - Sh. 2
40-M-117	Ventilation - Sh. 3
40-M-118	Air Conditioning
40-M-121	Gas Disposal Piping
40-M-126	Make-Up Water Piping
40-M-128	Purification Regeneration Piping

2. Electrical and Control

40-LD-1	Logic Diagram - Sh. 1 - Startup System
40-LD-2	Logic Diagram - Sh. 2 - Normal, Emergency or Auto Shutdown
40-E-5	Elementary Diagram - Sh. 1 - Nomenclature
40-E-6	Elementary Diagram - Sh. 2 - Reactor Intl'ks and Spray System
40-E-7	Elementary Diagram - Sh. 3 - Emergency Condenser and Boron Injection System
40-E-8	Elementary Diagram - Sh. 4 - Control Rod Drive and Clutch Mechanisms
40-E-9	Elementary Diagram - Sh. 5 - Reactor Scram Circuit
40-E-10	Elementary Diagram - Sh. 6 - Reactor Circulating Water and Preheater Systems
40-E-11	Elementary Diagram - Sh. 7 - Reactor Purification and Shutdown; Fuel Pool Circulating and Shield Cooling Systems
40-E-12	Elementary Diagram - Sh. 8 - Main Steam Stop and Turbine Bypass Valves and Feedwater Systems
40-E-13	Elementary Diagram - Sh. 9 - Building Ventilation, and Waste Disposal Systems
40-E-14	Elementary Diagram - Sh. 10 - Miscellaneous Systems - Sh. 1
40-E-15	Elementary Diagram - Sh. 11 - Indicating Lights, Miscellaneous Valves and Control Power Distribution Panels

C. Puerto Rico Water Resources Authority

1. Mechanical

Drawing No.	Title
23-X300w	Circulating Water Flow Diagram
23-X301w	Cooling Water Flow Diagram
23-X302w	Turbine Lubricating Oil and Service Air Piping Flow Diagram
23-X303w	Raw Water and Fire Protection System Flow Diagram
23-X304w	Flow Diagram Turbine Drips and Drains
23-X310w	Condenser Circulating and Salt Water Piping
23-X311w	Condenser Circulating and Salt Water Piping - Bill of Materials
23-X312w	Condensate Piping
23-X314w	Bill of Materials for Condensate Piping
23-X316w	Turbine Drip and Drain Piping and Bill of Materials
23-X318w	Condenser Air Piping
23-X320w	Bill of Materials for Condenser Air Piping
23-X321w	Raw Water Piping - Sh. 1
23-X321.01w	Raw Water Piping - Sh. 2
23-X322w	Bill of Materials for Raw Water Piping
23-X323w	Site Fire Protection System
23-X323.01w	Site Fire Protection System - Sh. 2
23-X323.02w	Site Fire Protection System - Sh. 3
23-X324w	Bill of Materials for Site Fire Protection System
23-X325w	Cooling Water Piping - Sh. 1
23-X325.0w	Cooling Water Piping - Sh. 2
23-X326w	Cooling Water Piping Bill of Material - Sh. 1
23-X326.01w	Cooling Water Piping Bill of Material - Sh. 2
23-X327w	Fuel Oil Tank and Piping for Diesel Set
23-X327.01w	Bill of Materials for Fuel Oil Tank and Piping for Diesel Set
23-X328w	Miscellaneous Vents
23-X328.01w	Bill of Material for Miscellaneous Vents
23-X329w	Chemical Feed System Piping
23-X330w	Bill of Material for Chemical Feed System Piping
23-X332w	Turbine Oil Filtering Piping and Bill of Material
23-X333w	Inserts in Turbine Pedestal - Sh. 1
23-X333.01w	Insert in Turbine Pedestal - Sh. 2
23-X335w	Station Service Air Piping - Sh. 1
23-X335.01w	Station Service Air Piping - Sh. 2
23-X335.02w	Station Service Air Piping - Sh. 3
23-X335.03w	Bill of Material for Station Service Air Piping
23-X337w	Miscellaneous Support
23-X338w	Entrance Building Plumbing - Sh. 1
23-X338.01w	Entrance Building Plumbing - Water Supply System - Sh. 2
23-X338.02w	Entrance Building Plumbing-Septic and Retention Tanks Site and Details - Sh. 3

Drawing No.	Title
23-X338.03w	Entrance Building Plumbing - Radioactive Waste Retention Tank
23-X338.01w	Entrance Building Plumbing Bill of Materials
23-X341w	Entrance Building Air Conditioning and Valve Pit Details
23-X345w	Turbine Pedestal Misc. Steel Embedded Parts
23-X347w	Auxiliary Steam Lines
23-X348w	Bill of Material for Auxiliary Steam Lines
23-X349w	Cooling Tower Sprinkler System and Bill of Material
23-X350w	Chlorination System Piping
23-X351w	Bill of Material for Chlorination System Piping
23-X355w	Turbine Local Panel
23-X357	Miscellaneous Steel Tanks - Sh. 1
23-X357.01w	Miscellaneous Steel Tanks
23-X357.02w	Miscellaneous Tanks
23-X380w	City Water Pipe Line Plan and Profile
23-X380.01	City Water Pipe Line Plan and Profile
23-X380.02	City Water Pipe Line Details

2. Electrical

23-X390w	Instrument Schedule
23-X391w	Instrument Standard Details
23-X400w	13.8 kv and 38 kv One Line and Relay Diagram
23-X400.01w	440v Station Service Switchgear and Load Centers One Line and Relay Diagram
23-X400.02w	440v AC Switchgear and Load Centers Layout
23-X401w	38 kv Switchyard General Arrangement and Details
23-X402w	38 kv Switchyard Grounding and Lighting System
23-X403w	38 kv Switchyard Conduit Layout
23-X404w	AC-DC One Line Diagram
23-X405w	Conduit and Wire Schedule
23-X405.01w	Conduit and Wire Schedule
23-X405.02w	Conduit and Wire Schedule
23-X406w	Elementary Diagrams
23-X406.01w	Elementary Diagrams Condenser Circulating Water and Cooling Water System
23-X406.02w	Elementary Diagrams, Condenser Circulating Water and Cooling Water System
23-X406.03w	Elementary Diagrams, Condenser Circulating Water and Cooling Water System
23-X406.04w	Elementary Diagrams, Condenser Circulating Water and Cooling Water System
23-X406.05w	Elementary Diagrams Annunciation
23-X406.06w	Elementary Diagrams
23-X406.07w	Elementary Diagrams
23-X406.08w	Elementary Diagrams
23-X407w	Generator and Power Transformer Main Leads Layout
23-X407.01w	Generator and Power Transformer Main Leads Layout
23-X408w	Main Control and Relay Board
23-X409w	Station Service Switchgear Busway Layout
23-X410w	AC-DC Switchgear Layout

Drawing No.	Title
23-X411w	Conduit Banks Layout
23-X411.01w	Pull Boxes and Manhole Details
23-X411.02w	Pull Boxes and Manhole Details
23-X412w	440v and 125 DC volts valve Cubicle Single Line Diagrams
23-X412.01w	440v and 125 DC volts valve Cubicle Layout
23-X413w	Pedestal Conduit Layout Grounding
23-X414w	Conduit and Grounding Cooling Tower and Screen Well Areas
23-X417w	Miscellaneous Conduit Layout Building Electrical Penetration
23-X417.01w	Miscellaneous Conduit Layout
23-X418w	Lighting-Cooling Tower and Screen Well Areas
23-X419w	Entrance Building Lighting Layouts
23-X419.01w	Entrance Building Transformer Vault Layout
23-X420w	Site Lighting Layout

3. Structural and Architectural

23-A101w	Site Plan
23-A102w	Test Borings Location Plan
23-A103w	Dredging Plan
23-A104w	Plot Plan
23-A105w	Site Grading Plan
23-A106w	Chain Link Fence
23-CC100w	Sea Water Intake and Outlet Waterfront Protection
23-CC101w	Sheeting and Bracing Arrangement at Intake Canal
23-E100w	Access Road - Plan and Profile - Sh. 1
23-E100.01	Access Road - Plan and Profile - Sh. 2
23-E101w	Access Road - Typical Cross Section of Roadway
23-E102w	Access Road - Cross Sections - Sh. 1
23-E102.01w	Access Road - Cross Sections - Sh. 2
23-E103w	Access Road - Culverts
23-EE200w	38 kv Switchyard Foundations
23-EE201w	Transformer Yard Foundation
23-H100w	Sea Water Intake Chamber Plan and Sections
23-H100.01w	Sea Water Outlet Chamber and Inlet Pipe Manhole Details
23-H100.02w	Circulating Pipes and Channels - Transitions and Shaft
23-H100.03w	Sea Water Intake Chamber - Section
23-H101w	Intake and Outlet Shop Logs
23-H104w	Intake and Discharge Pipes Plan, Profiles and Details
23-H105w	Circulating Water System-Construction for Pipes Under High Earth Cover
23-H105.01w	Circulating Water System Grouping Around Concrete Pipes
23-LL100w	Site Drainage Plan

Drawing No.	Title
23-LL100.01w	Site Drainage Profiles and Details
23-LL100.02w	Drainage Profiles
23-X101w	Floor Plan
23-X102w	Elevations and Sections Entrance Building
23-X103w	Doors, Windows, Partitions and Details, Entrance Building
23-X103.01w	Entrance Building Partitions, Windows and Miscellaneous Details
23-X104w	Miscellaneous Details - Entrance Building
23-X104.01w	Miscellaneous Details - Entrance Building
23-X105w	Lobby Layout - Entrance Building
23-X200w	Entrance Building Foundation Plan and Details
23-X200.01w	Entrance Building Special Foundations - Plan and Details
23-X201w	Entrance Building Structural Roof Plan and Details
23-X202w	Miscellaneous Foundations Inside Dome
23-X203w	Cooling Tower Foundations
23-X204w	Turbine Oil Tank and Oil Filtering Equipment Foundations
23-X204.01w	Turbine Oil Tank Steel Supports
23-X205w	Miscellaneous Foundations Outdoor
23-X206w	Retaining Walls
23-X210w	Turbine Pedestal Concrete Outline - Sh. 1
23-X210.01w	Turbine Pedestal Concrete Outline - Sh. 2
23-X211w	Turbine Pedestal Reinforcing Dowels - Sh. 1
23-X211.01w	Turbine Pedestal Reinforcing - Sh. 2
23-X211.02w	Turbine Pedestal Reinforcing - Sh. 3
23-X211.03w	Turbine Pedestal Reinforcing Schedule - Sh. 4
23-X212w	Turbine Pedestal Floor Plates
23-X213w	Turbine Pedestal Anchor Bolts Template
23-X213.01w	Turbine Pedestal Anchor Bolts
23-X220w	Zeolite Treatment Plant Building - Sh. 1
23-X220.01w	Zeolite Treatment Plant Building
23-X221w	Plant - Chlorination
23-X222w	Building for Emergency Diesel Generator Set

1202. DESIGN SPECIFICATIONS

(Latest addendum is applicable)

A. General Nuclear Engineering Corporation

Spec. No.	Specification Title
66-1	Reactor Pressure Vessel
66-2	Steam Dryer/Preheater
66-3	Embedded Shield Structures
66-4	Removable Shield Structures
66-5	Steel Aggregate Concrete
66-6	Reactor Core Structure Assembly
66-7	Reactor Control Rod Drives
66-8	Control Rods
66-9	Boiler Fuel Assemblies
66-10	Superheater Fuel Assemblies and Connector Piping
66-11A	Reactor Pressure Control System
66-12	Neutron Startup Source Assembly
66-13	Steel Linings for Upper Reactor Biological Shield
66-14	Fuel Transfer Equipment
66-15	Fuel Storage Racks and Fuel Discharge Rotating Shield Assembly
66-18	Waste Paper Baler
66-19	Thermal Insulation for Reactor Pressure Vessel and Shield Structure
66-20	Turbine Shield
66-21.1	Two Iodine Traps
66-22	Laboratory Furniture
66-23	Laboratory Apparatus
66-24	Boiler and Boiler-Superheater Shims
66-25	Boiler Fuel Holddown Assemblies
66-26	Superheater End Wedge
66-27	Superheater Nozzles Orifices and Fittings
66-28	Waste Transfer Cask

B. Jackson & Moreland, Inc.

Spec. No.	Specification Title
40-1	Two (2) Reactor Feedwater Pumps
40-2	Two (2) Reactor Circulating Water Pumps
40-3	Polar Gantry Traveling Crane
40-4	Four (4) Vertical Feedwater Heaters
40-5.1	Reactor Water Preheater
40-6	One Regenerative and One Secondary Cooler
40-7	Two (2) Reactor Purification Pumps
40-8	Miscellaneous Heat Exchangers

Spec. No.	Specification Title
40-9	Water Treatment Equipment
40-10.1	Emergency Condenser System
40-11	Poison Injection Tank
40-14	Control Air Compressor
40-15	Miscellaneous Water Pumps
40-16	Relief Valves
40-17	Liquid Waste Evaporator
40-18	Vapor Sphere
40-19	Miscellaneous Tanks
40-20	Two (2) Ventilation Fans
40-20.1	Miscellaneous Fans
40-22	Piping
40-23	Insulation
40-24	Ventilating Ductwork
40-25A	Building Ventilation Air Intake and Exhaust Butterfly Valves
40-25B	Gate Valves - 1500 lb., Class
40-25C	Globe, Angle and Check Valves - 2500 and 1500 lb., Classes
40-25D	Gate Valves - Motor Operated, 900 and 125 lb., Classes
40-25E	Globe Valves - Motor Operated, 900 lb., Class
40-25F	Stainless Steel Valves
40-27	Air Conditioning Equipment
40-28	Plumbing and Drain Piping
40-29	Pipe Hangers, Supports and Supplementary Supporting Steel
40-30	Instrument Air Dryer
40-31	Traps
40-32	Internal Cleaning of Piping and Equipment
40-33	Seal Water Pump
40-34	Expansion Joints
40-35	Extraction Non-Return Valves
40-37	Caustic Mixing Equipment
40-38	Waste Transfer Cast Hoist
40-101	Containment Building Grounding
40-102	Containment Building Lighting
40-103	Installation of Miscellaneous Equipment, Busways, Conduits, Trays and Grounding
40-104	Paging System
40-106	Communication Systems
40-107	Furnishing, Installing and Connecting Wire and Cable
40-108	Switching Panel Reactor Water Preheater
40-109	Plant Instrumentation, Process Controls and Main Control Panel
40-110	Control Valves
40-201	Containment Structure
40-202	Concrete
40-203	Excavation, Filling and Backfilling
40-204	Embedded Miscellaneous Metal Below Elevation 16'-0"
40-205	Pressure Grouting of Subsoil
40-206	Structural Steel - Furnishing

Spec. No.	Specification Title
40-207	Structural Steel - Erection
40-208	Embedded Miscellaneous Metal
40-209	Miscellaneous Metal and Steel
40-210	Foundation Containment Seal
40-211	Concrete Unit Masonry
40-212	Suspended Plaster Ceilings
40-213	Suspended Acoustic Board Ceilings
40-214	Kalamein Doors and Pressed Steel Frames
40-215	Glass and Glazing
40-216	Metal Toilet Compartments
40-217	Ceramic Tile
40-218	Vinyl Asbestos Floor Tile
40-220	Toilet Accessories
40-221	Builders Hardware
40-222	General Painting
40-224	Guyed Steel Stack

C. Puerto Rico Water Resources Authority

Spec. No.	Specification Title
23-1	16,500 Kw Steam Turbine Generator
23-2	One (1) Surface Condenser and Associated Equipment
23-3	Deep Well for Water Supply
23-4	One (1) 38 kv Switchyard Main Power Transformer and Station Service Transformer
23-5	Cooling Tower
23-6	Turbine and Main Control and Relay Board
23-7	Traveling Water Screens
23-8	Two (2) Manually Operated Intake Screenwell Gates and Accessories
23-10	Turbine Oil Filtering Equipment
23-11	Purchase of Electrical Equipment
23-12	One (1) Central Station Type Storage Battery
23-13	Generator Surge Protection and Neutral Grounding Equipment and Excitation Switchgear Assembly
23-14	Battery Charging Motor Generator Sets
23-15	Butterfly Valves
23-16	Cast Iron Mechanical Joint Piping and Supplementary Items
23-17	Chemical Feed System for the Cooling Tower Water
23-18	Cast Iron Circulating Water Pipe
23-19	Three (3) 46 kv Oil Circuit Breakers
23-20	Cathodic Protection Systems for one 20,000 sq. ft Condenser and Traveling Water Screens
23-21	Miscellaneous Pumps
23-23	Emergency Power Supply
23-24	Six (6) Light and Power Transformers
23-26	Station Service Air Compressor
23-27	Generator Main Leads

Spec. No.	Specification Title
23-28	One Salt Water Duplex Strainer and Motor Operated Salt Water Filter
23-29	Fire Hydrants
23-30	600V Power and Control Cables
23-31	Chlorine Injection Equipment
23-32	Steel, Cast Iron and Bronze Valves, Control and Regulating Valves, Machine Shop Equipment, Miscellaneous Piping, Mercoid Switches, Pressure Gages and Thermometers
23-33	Sprinkler System for the Cooling Tower