D.P. REPORT 343

DRAGON PROJECT USE ONLY

D. P. REPORT 343

O.E.C.D. HIGH TEMPERATURE REACTOR PROJECT

DRAGON

Dragon Project Report

GRAPHITE SPECIMENS IN THE UPRATED ELEMENT, FIRST CHARGE POSITION 3/1

by

ERIC H. VOICE

A.E.E. Winfrith, Dorchester, Dorset, England

May, 1965

GRAPHITE SPECIMENS IN THE UPRATED ELEMENT, FIRST CHARGE POSITION 3/1

by

ERIC H. VOICE

ABSTRACT

It is proposed to include in the Dragon core a large number of small graphite specimens to assess their irradiation behaviour and their possibilities for a future power reactor. Several series of fuel elements containing such specimens will be withdrawn after different intervals, providing various neutron doses and degrees of damage.

This report describes the specimens in the first of these elements, giving details of the nature of the graphites, the sample positions, the temperatures and fluxes anticipated, the pre-irradiation data, the methods of flux monitoring, and the post-irradiation measurements required.

CONTENTS

LIST OF ILLUSTRATIONS

FIGURE

7. The Mean Coefficient of Thermal Expansion of PGA and Dragon Grade 9 from 20°C.

8. The Creep-Strain Components.

9. The Assembled Spines in Transport Box.

GRAPHITE SPECIMENS IN THE UPRATED ELEMENT,

FIRST CHARGE POSITION 3/1

by

ERIC H. VOICE

1. THE ELEMENT AND ITS FACILITIES

For the first fifty days of operation at power the Reactor Experiment will be maintained at a level of 10 MW, confirming the hot-running behaviour before attaining the final designed power level. However, two elements in the core will have an increased fuel loading, generating in their interior conditions of temperature and flux approximating to those in the peripheral hot channels of a reactor operating at 20 MW. These uprated elements will be withdrawn after relatively short periods to assess damage and the progress of dimensional change, and to provide a prediction for the increase to 20 MW [1].

One such element is in position 3/1, about halfway between the core axis and periphery. In a uniformly-loaded reactor the fast (damage-producing) flux would fall radially with a uniform negative curve [2]. With the uprated element in position the fast flux would continue approximately constant from the axis outwards until the centre of the new element, after which a rapid fall would occur to the average reactor level at this radius. Temperatures, on the other hand, would be generally unaffected, rising a little only in the six outer rods of the uprated element and more in the centre rod. Hence the temperature profile is symmetrical over the complete uprated element but strongly asymmetrical across each of the six outer rods, whereas the fast flux is approximately uniform over the five rods nearest to the core axis (which includes the centre rod) but falls steeply across the two outermost rods.

The plan of the uprated element is shown in Fig. 1, with estimates of the spine temperatures and fast neutron flux (>0.1 MeV) levels at the left-hand side of Fig. 3. In the six outer rods temperatures increase upwards from 600°C to a maximum of about 1320°C, while in the centre rod the range is from 650-1650°C. Very approximately, the fast flux in the five rods nearest to the core axis ranges from 2.5 to 7.7 x 10^{13} n cm^{-2} s^{-1}, and in the two outermost rods (Nos. 3 and 4) from 2.2 to 6.8 x 10^{13} cm^{-2} s^{-1}. An irradiation for fifty days, for example, will allow a maximum fast neutron dose of 3 x $10^{20}/cm^3$. The gamma flux will be at the general core level of about 2 watts release per cubic centimetre of graphite.

This element, having a wide range of temperature and neutron flux and being withdrawn for examination after a comparatively short period, is ideal for the experimental irradiation of a variety of graphite samples. Down the centre of each rod within the column of fuel rings is a solid graphite spine. Each spine section is six inches long, and a little smaller in diameter than the fuel ring to allow a gas purge flow over the inside of the fuel. To accommodate the various specimens each spine section is drilled out and provided with a cap to form a container, as shown in Fig. 2A. Each container is of course a specimen in itself, measured and weighed before and after irradiation. In all cases the material is Pile Grade A parallel to

extrusion: the identification numbers appearing in the second column of Tables 1-7 give the precise origin of this graphite and are defined in [3]. The use of such containers allows easy routine element assembly, permits a large number of small otherwise - easily-lost specimens, and should help in preventing excessive fission product contamination of the contents.

Each rod normally contains ten spines. In this element nine in each rod were used as containers and the tenth cut into two portions to give a short solid spine at top and bottom. The lower piece raises the container spines to the point where they are symmetrically placed within the core, (i.e., the same excess fuel length of 2.82 in above and below the containers) and the top piece gives a solid mass to take up any excessive corrosion due to the incoming purge gas.

In Tables 1-7 the precise positions of the spines are shown in the third column with reference to the datum. This datum is the surface of the graphite disc upon which both the bottom fuel compact and the solid short spine rest. Subsequent columns in the tables also give the positions of the centre points of every specimen and of the pellet monitors with reference to this datum.

The thermocouple arrangement, AF(b), allows only one within the fuel, axially in the bottom solid spine A of Rod No. 1. There are four other thermocouples in the element, all in slots on the outer surface of Rod No. 7, as shown in Fig. 1: two at the top end, one in the middle and one at the bottom end. The distances of the hot junctions above the datum are:

Top surface thermocouple	61.1 in
Middle surface thermocouple	31.0 in
Bottom surface thermocouple	0.8 in
Spine No. 1A thermocouple	1.2 in.

Fig. 1 also shows the position of the outer metal neutron flux monitors. These are small pieces of nickel and cobalt wire each encapsulated in silica sheaths and held in long crimped stainless steel tubes lying in grooves up the outsides of Rods No. 2, 5 and 7. The precise vertical positions of these monitors are given in [4].

2. THE GRAPHITE SPECIMENS

2.1 Aspects of Interest

At the moment the outstanding problems of graphite technology concern irradiation shrinkage, especially where thermal gradients generate differential stresses, and accompanying creep. Hence dimensional changes due to radiation, creep caused by stress under irradiation and, to a lesser extent, changes in thermal expansion, are of prime interest.

In this element are two series of experiments,

(a) 2.2 to measure simple dimensional changes with irradiation, and

(b) 2.3 to measure creep-strain under applied stress and irradiation.

In the first case, three graphites of greatest past and present interest to the Dragon Reactor Experiments, Pile Grade A, Péchiney G5 and Morgan's CYX 165 (G9), are widely distributed over the temperature and flux range for detailed examination and as control for other materials. Specimens of other graphites are then interpolated: Figs. 3 and 4 display the arrangement in more detail.

For the creep-strain measurements two series of differentially-shrinking assemblies occupy the full length of two fuel rods.

2.2 The Shrinkage Specimens

For the measurement of dimensional change with irradiation but with no mechanical constraint a series of rods cut alternately parallel and at right-angles to the extrusion axis is arranged to receive as wide a range of fast neutron flux and temperature as possible. Figs. 1, 3, 4 and Tables 1-7 are relevant.

The standard specimen size is:

Length	2.625 ± 0.001 in
Diameter	0.220 ± 0.002 in

A few, supplied by Messrs. Nukem for THTR [5], are 1.28 in long by 0.197 in diameter, with some smaller pieces from Compagnie Péchiney, but in future all specimens should be of the standard size.

Pre-irradiation measurement of length was performed on the transducer comparator shown in Fig. 6. The instrument is the Parnum Electronic Gauge Unit [6]. A selection switch has four ranges, giving full-scale deflections from 0.015 in to 0.0005 in; the transducer spring-load is 60 g.

The position of the measuring head and the zero adjustment were set using an Invar rod of the standard specimen size. This rod has polished end faces parallel to 0.00001 in and was found to have a length of

2.62489 ± 0.00001 inch at 20°C

using a Leitz-Strassmann Universal Measuring Machine. The comparator transducer heads are offset from the centre of the V-block supports so that both standard and specimens are measured at a radius of 0.050 in from the axis. The lengths given for the specimens in Tables 2, 4, 6 and 7 are the extremes indicated on rotating the specimens in the V-grooves. Room temperature during measurement varied between 18°C and 20°C.

The only other measurement made before irradiation was of weight, shown in the Tables to the nearest milligramme. If it became desirable to perform post-irradiation measurements of other properties such as thermal expansion and conductivity or Young's modulus, duplicate unirradiated samples are available as a control. All handling during the machining, the measuring and the final assembly, was carried out wearing cotton gloves.

The graphites used for the shrinkage specimens are as follows.

PGA - Pile Grade A

In Rods No. 4, 6 and 7 each container (nine per rod) holds one specimen of each orientation. The material is of British Acheson Electrode (BAEL) manufacture from an extruded block, Heat No. A 7010 (3.86 barns, density 1.75). This has one pitch impregnation.

Rod No. 2 has a similar series but using PGA specimens cut from the same small extruded block used for the second and third capsules irradiated at RCN, Petten. This material was manufactured by Anglo Great Lakes (AGL), with two pitch impregnations.

G5 - A Dragon-Péchiney Graphite

G5 is a fine-grained graphite made by Péchiney from reground French E.D.F. graphite, with two pitch impregnations: the composition is given in [7]. Note that the designation "G5" is of Péchiney origin and does not refer to Dragon Grade 5.

Specimens were cut in each orientation from a 3.25 in diameter bar of the first batch of fuel rod material for the Dragon Second Charge. This bar had been rejected for surface spalling and fissures.

Two specimens are in all containers of Rods No. 4, 6 and 7, and in the lower six containers of Rod No. 2.

G9 - Dragon Grade 9

Morgan's CYX 165, graphitised and purified at Compagnie Péchiney. Specimens were cut in both orientations from a 3.25 in diameter unimpregnated bar, part of the material used for the Dragon First Charge. Specimens are in all containers of Rods No. 2, 4, 6 and 7.

It should be noted that this material is unimpregnated, whereas the G9 used in the first and second Petten Capsules for shrinkage specimens had been impregnated with furfuryl alcohol.

IG - Improved Graphite

This is a new graphite developed to a UKAEA specification, with a greater isotropy and an improved radiation stability in the range of interest to the advanced gas-cooled reactor. The properties of this material and the considerations leading to its development are given in [8].

Specimens of two orientations from a large extruded hollow rod are in alternate containers of Rods No. 2, 4, 6 and 7.

CL - Carbone-Lorraine Type 2239

This is a high-strength pressed graphite used for the Dragon fuel element top blocks: the characteristics are detailed in Table 25 of [7].

Specimens cut from a spare top block pressing, in each orientation, are in alternate containers of Rods No. 2, 4, 6 and 7. There are also eight small specimens (1.28 in x 0.197 in), four in each orientation, distributed in the three top containers of Rod No. 5: see Fig. 4. These were supplied ready machined by Messrs. Nukem for THTR.

Carbone-Lorraine Type 3780

Another graphite supplied as small rods by Nukem. Six specimens of each orientation are distributed over the top three containers of Rod No. 5 (Fig. 4).

PC1 - 36 N.P. - A Péchiney Graphite

Reference C.D. 28839.

A pressed graphite supplied as machined samples of the following characteristics:

Thermal expansion coefficient (20-500°C) $6.55 \times 10^{-6}/°C$ //

Thermal expansion coefficient (20-500°C). $2.07 \times 10^{-6}/°C$ $\perp$

Density 1.884 (1.906) g/cm^3

Samples of each orientation are in three spaced containers in the lower part of Rod No. 5.

PC1 - 37 P.3 - Péchiney

Reference C.D. 30708.

A pressed graphite supplied as machined samples with:

Thermal expansion coefficient (20-500°C) $6.65 \times 10^{-6}/°C$ //

Thermal expansion coefficient (20-500°C) $2.11 \times 10^{-6}/°C$ $\perp$

Density 1.921 (1.914) g/cm^3

Samples of each orientation are in three alternate containers of Rod No. 5.

PC1 - 26 - A Péchiney Sample

Reference C.D. 26395, No. 26.

A pressed graphite. One specimen, cut parallel to the direction of pressing is in the top container of Rod No. 5 (Fig. 4). Measurements on this piece at Péchiney gave:

Thermal expansion coefficient (20-500°C) 9.79 x 10^{-6}/°C //

Density 1.98 g/cm^3

Siemens-Plania AMT

A fine-grained graphite supplied ready machined by Messrs. Nukem for THTR. The samples were out from a pressed block of the following characteristics:

	//	⊥
Thermal expansion, x 10^{-6}/°C	2.5	3.5
Thermal conductivity, cal/cm s °C (25°C)	0.32	0.22
Bending strength, kg/cm^2	320	290
Compressive strength, kg/cm^2	650	630
Density, g/cm^3	1.73	
Ash, ppm	<50	

Ringsdorff Werke K.R. 67

Another fine-grained pressed material supplied machined by Nukem for THTR. The characteristics of the pressing are given as follows:

	//	⊥
Thermal expansion, x 10^{-6}/°C	2.6	3.0
Thermal conductivity, cal/cm s °C (25°C)	0.26	0.22
Bending strength, kg/cm^2	280	250
Compressive strength, kg/cm^2	580	580
Density, g/cm^3	1.73	
Ash, ppm	<50	

2.3 The Creep-Strain Specimens

Graphite shrinkage during irradiation may be counteracted by an applied tensile stress, superimposing a neutron dose-dependent creep. This is of importance not only where structural reactor graphite is subjected to a static load but also where differential temperatures and fluxes cause different rates of shrinkage combined with differential stresses.

No experiment has yet been devised for Dragon in which a constant static load is imposed on a specimen in the core. The only feasible methods utilise the known radiation behaviour of a comparatively large piece of graphite to stress a specimen of a size sufficiently small to have no effect on the dimensional change of the larger piece. Such a method has been described by Losty [9] and Jackson and Hart [10], and a varient has been used by J. H. W. Simmons in the Dounreay Fast Reactor. A modification for use at RCN, Petten, is described in [11].

The arrangement of the components for the specimens in the present element is shown in Fig. 8, with the detail drawings in Figs. 2B and 2C. A "dumb-bell" of G9 graphite (Morgan's CYX 165, the unimpregnated fuel rod material of the first reactor charge) has around the central rod a cylinder or sleeve of Pile Grade A (manufactured by British Acheson Electrodes Ltd.), split in two for assembly. The whole fits into one of the standard spine containers (Fig. 2A).

The G9 shrinks more with irradiation than the PGA and the central rod will thus be in tension. The contact area of the ends of the PGA sleeve is eight times the cross-sectional area of the central rod, giving sufficient tension without undue reaction on the PGA shrinkage. To attain the longest period under stress the relative lengths of dumb-bell and sleeve are such that the thermal expansion, which is greater for PGA, causes the faces to meet at reactor temperature but not to exert an excessive stress which might break the rod before irradiation creep could occur. The use of a PGA sleeve cut transversly to the extrusion axis gives the greatest thermal expansion and allows the pieces to separate without damage at the end of the experiment.

Nine creep-strain specimens occupy the full length of each of Rods No. 1 and 3. Fig. 3 shows the estimated fast neutron fluxes and temperatures and Tables 1 and 3 give the positions and precise dimensions of the components. The dumb-bells were measured internally on a Leitz-Strassmann Universal Measuring Machine and Tables 1 and 3 give the length to the nearest 0.00001 in at two diametrically-opposed points on each dumb-bell: most of the faces are parallel on this diameter to within 0.0003 in. The sleeves were measured separately using a transducer comparator: the tables show the length of each half to the nearest 0.0001 in.

The lengths actually required for the components to meet precisely at the anticipated temperatures according to their position in the core were determined from the thermal expansion plot in Fig. 7. Because of unavoidable machining tolerances it is desirable to calculate the actual

initial stress from the actual measured lengths. The following table shows the specimen number, the anticipated temperature, and the estimated initial stress, using the thermal expansion plot in Fig. 7 and assuming a Young's modulus of 1.83×10^6 psi [12].

T

The Calculated Initial Dumb-bell Stresses			
Specimen Number	Anticipated Temperatures °C	Initial Gap at Temperature*	Resulting Initial Stress psi
1J	1125	-0.00050	300
1I	1200	+0.00016	-
1H	1275	-0.00122	740
1G	1325	+0.00069	-
1F	1275	-0.00009	55
1E	1200	+0.00051	-
1D	1075	+0.00037	-
1C	900	+0.00072	-
1B	700	+0.00061	-
3J	1125	-0.00036	220
3I	1200	+0.00041	-
3H	1275	-0.00006	37
3G	1325	+0.00047	-
3F	1275	-0.00003	18
3E	1200	+0.00042	-
3D	1075	-0.00058	350
3C	900	+0.00093	-
3B	700	+0.00092	-

*In column three, + indicates sleeve shorter than dumb-bell, i.e., a positive gap, whereas - indicates that the dumb-bell is stretched by this amount.

3. THE CERAMIC PELLET MONITORS

It has been mentioned in Section 1 that three of the fuel rods (Nos. 2, 5 and 7) have stringers of nickel and cobalt flux monitors held in grooves on the outer surfaces (Fig. 1). For a more detailed examination of the neutron flux pattern a monitor is also held in each of the 63 spine containers: in Figs. 2A and B the transverse monitor hole can be seen in the cap.

These monitors are of the ceramic pellet type developed at Harwell and lately improved in sensitivity. A small amount of the natural metal oxide (Fe, Co or Ni in this case) is mixed with pure alumina and pressed and sintered into cylindrical pellets 2 mm diameter by 2 mm long. A number of these pellets is then briefly irradiated together with a weighed piece of pure metal wire and the activity of wire and pellets counted separately. Simple proportion gives the weight of metal in each pellet, which can then be re-irradiated in the neutron flux to be measured and the activity re-determined. This method of calibration is more accurate than the earlier procedure where the metal content was assumed from the initial mix, neglecting any volatilisation during sintering.

Several difficulties can be foreseen in using such a monitor in a high temperature/graphite/pure helium environment:

(a) At the highest temperatures of the uprated element (up to 1650°C) reduction and volatilisation of the metal could occur.

(b) Since a small proportion of carbon monoxide can be anticipated, but no dioxide, the alumina itself will be unstable at high temperature.

(c) Similarly both the metal oxide and the alumina will be unstable in contact with graphite.

(d) Fission product contamination is probable during irradiation, and possible during post-irradiation dissection, seriously affecting the monitor activity count.

To overcome these difficulties the pellets for the uprated element are encapsulated in silica. Carried out in a small oxy-hydrogen flame, carefully avoiding heating of the pellet, this probably provides the pellet with an oxidising environment at perhaps half an atmosphere pressure. Of course, reactor conditions of 1650°C and 20 atm will quickly collapse the envelope on to the pellet but this does not matter as the envelope need never be removed. Any fission product contamination should be removable by washing before counting.

However, it has been observed that prolonged contact of silica with graphite at high temperatures causes devitrification, sometimes with a collapse to a powder, so to isolate the silica each capsule is wrapped in a niobium foil sheath. Niobium was chosen for its low neutron absorption cross-section (1.1 barns in the thermal region and continuing over the whole energy range at about this level, with the exception of a few peaks rising to several tens of barns between 30 and 1,000 eV), its high melting point of 2468°C, its high temperature stability in non-oxidising atmospheres, and its ductility in sheet form. In contact with graphite at high temperature a carbide will be formed: although this causes brittleness, the form is maintained and in practice the brittleness might be of advantage in allowing easy post-irradiation removal from the silica.

Fig. 5 shows, from left to right, the alumina pellet, the pellet in the silica envelope, the niobium foil, the foil wrapped around the envelope, and the graphite cap with transverse hole. In reality the nickel and cobalt

pellets were a mottled blue in colour before irradiation and the iron a creamy-white: they were handled throughout using tweezers.

The alumina of the pellets is Johnson & Matthey "Spec-Pure," the silica is thermal syndicate transparent fused silica, and the niobium was shown spectrographically to be practically pure. The total weights of these impurities added to the fuel element are:

66 pellets = 1.98 g of alumina

66 silica envelopes = 2.64 g of silica

66 pieces of foil = 10.80 g of niobium

The metal contents of the pellets are of course very small, totalling for the whole element:

Iron	18 mg	present as Johnson & Matthey "Spec-Pure" Oxides
Cobalt	7 mg	
Nickel	7 mg	

Fig. 3 shows diagrammatically the location of the pellet monitors in the fuel rods.

Rods No. 2, 3, 5 and 6 have an iron pellet monitor in each container. Fe-54 (present at 5.9% in natural iron) has the reaction Fe-54 (n, p) Mn-54, with an energy threshold of about 2.8 MeV. A count of the gamma emitting Mn-54 ($T_{\frac{1}{2}}$ = 291 days), isolating the 0.842 MeV line, gives a measure of the fast neutron flux.

This neutron energy threshold of 2.8 MeV is rather high, "fast damage flux" for graphite usually being taken as >0.05 MeV, and a reaction of lower threshold is desirable. Rods No. 1, 4 and 7 therefore contain nickel and cobalt pellets. Ni-58 (present at 68.0% in natural nickel) has the reaction Ni-58 (n, p) Co-58, with an energy threshold of about 1.5 MeV, and a count of the gamma-emitting Co-58 ($T_{\frac{1}{2}}$ = 71 days) gives the fast neutron flux. However, Co-58 has a high thermal neutron capture cross section, giving the stable Co-59. To correct for this loss it is necessary to know the thermal flux, and this is conveniently determined by simultaneously irradiating a cobalt specimen having the reaction Co-59 (n, γ) Co-60 and counting the Co-60 gamma activity ($T_{\frac{1}{2}}$ = 5.2 years).

Obviously it is necessary to irradiate the nickel and cobalt pellets in close proximity, subjected to the same spectrum. Since one pellet only is in each container, alternate containers in Rods No. 1, 4 and 7 are inverted as indicated in Fig. 3, bringing the two pellet types within 0.7 in of each other. An odd nickel pellet is now in the top container of each rod and to match this the top solid spines 1K, 4K and 7K are fitted with false caps containing cobalt pellets.

The last four columns of Tables 1-7 show the type of monitor, the reference number identifying the calibration batch, the calibrated metal content in micrograms, and the precise position in the Reactor with reference to the datum line defined in Section 1. (For the nickel no metal content figure is yet available.) The first column of the tables, giving the spine number, also indicates by an arrow the cap end of the container. Neither the pellets nor their sheaths have any marking and can be identified only by their position in the fuel rod.

4. POST-IRRADIATION MEASUREMENTS

On removing from the Reactor the fuel element will be dissected in a hot cell. At one stage the fuel tubes will be cut near the ends and the fuel compacts pushed out with the spines inside, taking care not to misplace any spine container caps which may be loose.

From this point the procedure has not been defined in detail, depending much on the levels of activity of the various components. For the time being, as each spine appears it will be photographed if necessary and weighed to the nearest milligram. The overall length of each spine (including the cap) will be measured to the nearest 0.001 in.

In the case of Rods No. 2, 4, 5, 6 and 7, after each spine has been measured and weighed its cap will be pulled off and the encapsulated monitor pushed out into a suitable small container marked with the spine number. If the niobium activity is high it might be desirable to remove the foil sheath at this point. The graphite specimens will then be carefully tipped out into another marked container.

Rods No. 1 and 3 contain the creep-strain experiments. In these cases the caps should be pulled out slowly and gently, lying on a flat surface, to check whether the dumb-bell is broken. When the sleeves have separated, the monitor can be pushed out as before and the three graphite pieces carefully put into a container.

It is assumed that these marked containers of the encapsulated monitors, the shrinkage specimens and the dumb-bells and sleeves are of sufficiently low activity to be removed from the hot cell for further examination.

Each shrinkage specimen will be weighed to the nearest milligram and the length measured, probably using the same comparator device as for the pre-irradiation measurements. The monitors will be passed to the Dragon Operations Group for counting, with preliminary washing if required.

Other measurements on the shrinkage specimens are at present uncertain but may include Young's modulus by velocity of sound, thermal expansion, and thermal conductivity by the method of Kohlrausch, using versions of the apparatus developed at RCN, Petten.

For the creep-strain experiments it will be necessary to:

(a) Measure the lengths of the separated sleeves and the internal lengths of the dumb-bells. (If of sufficiently low activity this

would be conveniently carried out by the Winfrith Standards Section, as for the pre-irradiation measurements.)

(b) Determine the coefficient of expansion of the dumb-bell centre section up to, say, 600°C: extrapolation may be made beyond this to the temperature of irradiation.

(c) Estimate the Young's modulus for the dumb-bell centre section at the temperature of irradiation. This can be done by calculating the strain from the lengths of the sleeves and their known coefficients of expansion, and the lengths of the dumb-bells and their measured coefficients. The specimen would then be loaded mechanically to give this strain and the necessary stress measured: it is possible that this could be carried out with sufficient accuracy at room temperature.

5. REFERENCES

* [1] R. A. Saunders, "The Uprated Fuel Element," Dragon Internal Document, DPCPWP/D.33.

* [2] H. Gutmann, "Investigations Concerning Radiation Damage in Graphite in the Dragon Core," Dragon Internal Document, DPRDD/1326.

* [3] L. W. Graham, "Numbering System to be Used for Fuel Element Spines for the First Charge of Dragon," Dragon Internal Document, DPRDD/1106.

* [4] J. Willshire, "Notes on the Manufacture of the Flux Monitor Assemblies," Dragon Internal Document, DPRDD/1360.

[5] Nuklear-Chemie und-Metallurgie, GmbH, Wolfgang bei Hanau (Main), West Germany. Contractors to THTR-Projektleitung.

[6] Parnum Gauges Ltd., Bracknell, Berkshire, England.

[7] L. W. Graham and M. S. T. Price, "The Fuel Element Graphite," D.P. Report 146, Table 4.1, Page 77.

[8] J. M. Hutcheon and R. P. Thorn, "Improved Graphite for Nuclear Purposes," Society of Chemical Industry, Second Industrial Carbon and Graphite Conference, April, 1965.

[9] H. H. W. Losty, et al., "The Irradiation-Induced Plasticity in Graphite," Proceedings of the Fifth Conference on Carbon, Pennsylvania, 1961.

[10] Jackson and Hart, "An Irradiation-Actuated Device for Measuring the Strain Limit of Graphite," HW-SA-3737.

*[11] L. W. Graham and E. Smith, "Design of an Experiment to Investigate the Effects of Restraining the Irradiation-Induced Shrinkage of Graphite," Dragon Internal Document, DPRDD/1211.

[12] L. W. Graham, "The Development of Low Permeability Graphite for the Dragon Reactor Experiment," D.P. Report 40.

*[13] W. L. Zyp and H. J. Nolthenius, "Neutron Metrology in the HFR," RCN-Int-6 3-062.

*NOTE: Many of the documents referred to are not available for general distribution. Any requests for further information should be addressed to The Chief Executive, O.E.C.D. High Temperature Reactor Project (Dragon), AEE, Winfrith, Dorchester, Dorset, England.

Table 1

Rod No. 1

Spine number (marked on spine dumb-bell and sleeve)	Other numbering on spine	Position of spine versus datum	Nature of specimens	Position of centre point of dumb-bell versus datum	Measured dumb-bell inner length in inches	Measured sleeve length in inches	Total weight and length of assembled spine dumb-bell sleeve and monitor etc., before irradiation	Pellet Monitors			
								Type	Identification numbers	Weight of metal µG	Position versus datum
1K	15/2/1	65.90" 60.18"	Solid spine of PGA(AGL) parallel, 5.72" long, (includes cap and monitor)				69.535 g 5.716"	Co	42935	432	60.5"
1J	16/2/5	60.18" 53.80"	One creep-strain dumb-bell	56.9"	3.00042 3.00059	2.9965 2.9966	79.879 g 6.378"	Ni	X	X	59.9"
1I	15/3/1	53.80" 47.43"	One creep-strain dumb-bell	50.7"	3.00012 3.00032	2.9950 2.9952	80.195 g 6.379"	Co	42943	438	47.7"
1H	18/2/5	47.43" 41.05"	One creep-strain dumb-bell	44.2"	3.00005 3.00043	2.9959 2.9959	81.318 g 6.378"	Ni	X	X	47.1"
1G	16/3/1	41.05" 34.68"	One creep-strain dumb-bell	37.9"	3.00042 3.00047	2.9937 2.9938	80.431 g 6.380"	Co	42930	487	35.0"
1F	15/2/1	34.68" 28.30"	One creep-strain dumb-bell	31.4"	3.00012 3.00018	2.9946 2.9948	80.872 g 6.380"	Ni	X	X	34.4"
1E	15/2/5	28.30" 21.93"	One creep-strain dumb-bell	25.2"	3.00010 3.00019	2.9949 2.9949	80.912 g 6.377"	Co	42933	484	22.2"
1D	16/4/1	21.93" 15.56"	One creep-strain dumb-bell	18.7"	3.00016 3.00034	2.9957 2.9958	81.041 g 6.377"	Ni	X	X	21.6"
1C	18/4/5	15.56" 9.19"	One creep-strain dumb-bell	12.4"	3.00047 3.00054	2.9967 2.9969	80.485 g 6.380"	Co	42942	447	9.5"
1B	17/4/1	9.19" 2.82"	One creep-strain dumb-bell	5.9"	3.00064 3.00079	2.9981 2.9981	81.299 g 6.377"	Ni	X	X	8.9"
1A	-	2.82" 0.00"	Solid spine of PGA(AGL) parallel, 2.82" long, (includes axial hole 2.5" deep (upwards) for thermocouple				35.580 g 2.814"				

Table 2

Rod No. 2

Spine number (marked on spine)	Other numbering on spine	Position of spine versus datum	Nature of specimens	Orientation of specimen axes	Identification number on specimens	Position of centre point of specimens versus datum	Nominal dimensions of specimen	Measured length of specimen before irradiation, inches	Weight of specimen before irradiation, grammes	Total weight and length of assembled spine including specimens and monitor, etc., before irradiation.	Pellet Monitors: Type	Identification number	Weight of metal, µg	Position versus datum
2K	15/1/5	65.90" 60.18"	Solid spine of PGA(AGL), parallel, 5.72" long					-	-	73.602 g 5.719"				
↑ 2J	15/4/3	60.18"	PGA(AGL)	//	2J1	58.0"	2.625" x 0.220"	2.6249-2.6253	2.880		Fe	F457	419	59.9"
			G5	//	2J2		2.625" x 0.220"	2.6237	2.905					
			G9	//	2J3		2.625" x 0.220"	2.655	2.941					
			IG	//	2J4		2.625" x 0.220"	2.6244-2.6249	2.583	64.009 g				
		53.80" ↓	PGA(AGL)	⊥	2J5	55.4"	2.625" x 0.220"	2.6244	2.589	6.380"				
			G9	//	2J6		2.625" x 0.220"	2.6256	2.917					
			G9	⊥	2J7		2.625" x 0.220"	2.6250-2.6252	2.910					
			IG	⊥	2J8		2.625" x 0.220"	2.6244-2.6246	2.904					
↑ 2I	15/4/1	53.80"	PGA(AGL)	//	2I1	51.6"	2.625" x 0.220"	2.6247-2.6250	2.562		Fe	F462	419	53.5"
			G5	//	2I2		2.625" x 0.220"	2.6254	2.958					
			G9	//	2I3		2.625" x 0.220"	2.6255	2.903					
			CL	//	2I4		2.625" x 0.220"	2.6248	2.903	65.668 g				
		47.43" ↓	PGA(AGL)	⊥	2I5	49.0"	2.625" x 0.220"	2.6249-2.6251	2.596	6.380"				
			G9	//	2I6		2.625" x 0.220"	2.6252	2.896					
			G9	⊥	2I7		2.625" x 0.220"	2.6251-2.6253	2.928					
			CL	⊥	2I8		2.625" x 0.220"	2.6256-2.6257	2.885					
↑ 2H	16/1/3	47.43"	PGA(AGL)	//	2H1	45.2"	2.625" x 0.220"	2.6251-2.6253	2.602		Fe	F456	418	47.1"
			G5	//	2H2		2.625" x 0.220"	2.6252-2.6254	2.930					
			G9	//	2H3		2.625" x 0.220"	2.6255-2.6256	2.908					
			IG	//	2H4		2.625" x 0.220"	2.6248-2.6250	2.899	64.130 g				
		41.05"	PGA(AGL)	⊥	2H5	42.6"	2.625" x 0.220"	2.6245-2.6251	2.573	6.380"				
			G9	//	2H6		2.625" x 0.220"	2.6255	2.920					
			G9	⊥	2H7		2.625" x 0.220"	2.6252-2.6253	2.851					
			IG	⊥	2H8		2.625" x 0.220"	2.6247-2.6250	2.897					
↑ 2G	15/1/5	41.05"	PGA(AGL)	//	2G1	38.8"	2.625" x 0.220"	2.6258-2.6260	2.578		Fe	F468	461	40.7"
			G5	//	2G2		2.625" x 0.220"	2.6250-2.6251	2.922					
			G9	//	2G3		2.625" x 0.220"	2.6254-2.6255	2.868					
			CL	//	2G4		2.625" x 0.220"	2.6256-2.6257	2.912	64.911 g				
		34.68"	PGA(AGL)	⊥	2G5	36.2"	2.625" x 0.220"	2.6246-2.6249	2.553	6.380"				
			G5	⊥	2G6		2.625" x 0.220"	2.6249-2.6250	2.933					
			G9	⊥	2G7		2.625" x 0.220"	2.6249-2.6250	2.947					
			CL	⊥	2G8		2.625" x 0.220"	2.6253-2.6254	2.915					
↑ 2F	18/3/1	34.68"	PGA(AGL)	//	2F1	32.5"	2.625" x 0.220"	2.6248-2.6251	2.539		Fe	F458	472	34.4"
			G5	//	2F2		2.625" x 0.220"	2.6256	2.947					
			G9	//	2F3		2.625" x 0.220"	2.6256-2.6257	2.883					
			IG	//	2F4		2.625" x 0.220"	2.6250-2.6251	2.888	64.937 g				
		28.30"	PGA(AGL)	⊥	2F5	29.9"	2.625" x 0.220"	2.6248-2.6250	2.562	6.381"				
			G5	⊥	2F6		2.625" x 0.220"	2.6250	2.941					
			G9	⊥	2F7		2.625" x 0.220"	2.6250-2.6251	2.890					
			IG	⊥	2F8		2.625" x 0.220"	2.6235-2.6238	2.919					
↑ 2E	16/3/1	28.30"	PGA(AGL)	//	2E1	26.1"	2.625" x 0.220"	2.6251-2.6253	2.567		Fe	F469	393	28.0"
			G5	//	2E2		2.625" x 0.220"	2.6245-2.6246	2.970					
			G9	//	2E3		2.625" x 0.220"	2.6256	2.929					
			CL	//	2E4		2.625" x 0.220"	2.6255-2.6256	2.898	65.744 g				
		21.93"	PGA(AGL)	⊥	2E5	23.5"	2.625" x 0.220"	2.6249-2.6250	2.561	6.383"				
			G5	⊥	2E6		2.625" x 0.220"	2.6249-2.6250	2.950					
			G9	⊥	2E7		2.625" x 0.220"	2.6252-2.6253	2.895					
			CL	⊥	2E8		2.625" x 0.220"	2.6259	2.901					
↑ 2D	15/4/3	21.93"	PGA(AGL)	//	2D1	19.7"	2.625" x 0.220"	2.6246-2.6249	2.589		Fe	F470	388	21.6"
			G5	//	2D2		2.625" x 0.220"	2.6254	2.929					
			G9	//	2D3		2.625" x 0.220"	2.6258	2.908					
			IG	//	2D4		2.625" x 0.220"	2.6244-2.6246	3.008	64.259 g				
		15.56"	PGA(AGL)	⊥	2D5	17.1"	2.625" x 0.220"	2.6249-2.6252	2.587	6.382"				
			G5	⊥	2D6		2.625" x 0.220"	2.6249-2.6251	2.949					
			G9	⊥	2D7		2.625" x 0.220"	2.6255	2.908					
			IG	⊥	2D8		2.625" x 0.220"	2.6249-2.6253	2.888					
↑ 2C	15/4/3	15.56"	PGA(AGL)	//	2C1	13.4"	2.625" x 0.220"	2.6247-2.6250	2.587		Fe	F471	451	15.3"
			G5	//	2C2		2.625" x 0.220"	2.6243-2.6246	2.946					
			G9	//	2C3		2.625" x 0.220"	2.6252	2.898					
			CL	//	2C4		2.625" x 0.220"	2.6249-2.6251	2.868	64.968 g				
		9.19"	PGA(AGL)	⊥	2C5	10.8"	2.625" x 0.220"	2.6243-2.6246	2.570	6.380"				
			G5	⊥	2C6		2.625" x 0.220"	2.6250	2.937					
			G9	⊥	2C7		2.625" x 0.220"	2.6252-2.6254	2.919					
			CL	⊥	2C8		2.625" x 0.220"	2.6252-2.6254	2.923					
↑ 2B	18/1/5	9.19"	PGA(AGL)	//	2B1	7.0"	2.625" x 0.220"	2.6250-2.6254	2.568		Fe	F548	377	8.9"
			G5	//	2B2		2.625" x 0.220"	2.6247	2.962					
			G9	//	2B3		2.625" x 0.220"	2.6251	2.913					
			IG	//	2B4		2.625" x 0.220"	2.6247-2.6250	2.885	65.018 g				
		2.82"	PGA(AGL)	⊥	2B5	4.4"	2.625" x 0.220"	2.6240-2.6244	2.571	6.381"				
			G5	⊥	2B6		2.625" x 0.220"	2.6248-2.6250	2.977					
			G9	⊥	2B7		2.625" x 0.220"	2.6250-2.6252	2.876					
			IG	⊥	2B8		2.625" x 0.220"	2.6249-2.6251	2.915					
2A	15/2/5	2.82" 0.00"	Solid spine of PGA(AGL), parallel, 2.82" long					-	-	36.682 g 2.820"				

Table 3

Rod No. 3

Spine Number (marked on Spine, dumb-bell and sleeve)	Other numbering on spine	Position of spine versus datum	Nature of specimens	Position of centre point of dumb-bell versus datum	Measured dumb-bell inner length in inches	Measured sleeve length in inches	Total weight and length of assembled spine, dumb-bell, sleeve and monitor, etc.,	Pellet Monitors			
								Type	Identification Numbers	Weight of metal, μg	Position versus datum
3K	15/4/1	65.90" 60.18"	Solid spine of PGA(AGL) parallel, 5.72" long				72.856 g 5.720"				
↑ 3J	17/3/5	60.18" 53.80"	One creep-strain dumb-bell	56.9"	2.99994 3.00014	2.9959 2.9961	80.919 g 6.379"	Fe	F455	447	59.9"
↑ 3I	15/2/3	53.80" 47.43"	One creep-strain dumb-bell	50.6"	3.00022 3.00029	2.9948 2.9949	79.358 g 6.380"	Fe	F463	425	53.5"
↑ 3H	16/4/1	47.43" 41.05"	One creep-strain dumb-bell	44.2"	3.00021 3.00037	2.9947 2.9948	80.325 g 6.380"	Fe	F464	450	47.1"
↑ 3G	17/3/1	41.05" 34.68"	One creep-strain dumb-bell	37.8"	3.00028 3.00056	2.9939 2.9940	81.670 g 6.380"	Fe	F472	446	40.7"
↑ 3F	15/1/5	34.68" 28.30"	One creep-strain dumb-bell	31.4"	3.00037 3.00048	2.9948 2.9950	79.623 g 6.378"	Fe	F545	427	34.4"
↑ 3E	18/3/3	28.30" 21.93"	One creep-strain dumb-bell	25.1"	2.99992 2.99998	2.9948 2.9948	79.719 g 6.379"	Fe	F539	437	28.0"
↑ 3D	15/4/3	21.93" 15.56"	One creep-strain dumb-bell	18.7"	3.00017 3.00042	2.9967 2.9968	79.257 g 6.377"	Fe	F473	455	21.6"
↑ 3C	17/3/1	15.56" 9.19"	One creep-strain dumb-bell	12.3"	3.00033 3.00049	2.9964 2.9966	81.331 g 6.380"	Fe	F476	455	15.3"
↑ 3B	16/4/5	9.19" 2.82"	One creep-strain dumb-bell	5.9"	3.00023 3.00057	2.9975 2.9975	79.936 g 6.375"	Fe	F475	414	8.9"
3A	18/2/1	2.82" 0.00"	Solid spine of PGA(AGL), parallel, 2.82" long				36.645 g 2.820"				

Table 4

Rod No. 4

Spine Number (marked on spine)	Other Numbering on Spine	Position of Spine versus Datum	Nature of Specimens	Orientation of Specimen axes	Identification Number on Specimens	Position of Centre Point of Specimen versus Datum	Nominal Dimensions of Specimen	Measured length of Specimen before Irradiation, inches	Weight of Specimen before Irradiation, grammes	Total Weight and Length of Assembled Spine including Specimens and Monitor, etc., before Irradiation	Pellet Monitors: Type	Pellet Monitors: Identification Number	Pellet Monitors: Weight of Metal, µg	Pellet Monitors: Position versus Datum
4K	15/1/1	65.90" 60.18"	Solid spine of PGA(AGL) parallel, 5.72" long (includes cap and monitor)					-	-	72.304 g 5.730"	Co	42936	470	60.5"
↑			PGA(BAEL)	//	4J1		2.625" x 0.220"	2.6251-2.6253	2.828		Ni	X	X	59.9"
			G5	//	4J2		2.625" x 0.220"	2.6253-2.6254	2.934					
		60.18"	G9	//	4J3	58.0"	2.625" x 0.220"	2.6254-2.6255	2.896					
4J	15/4/3		IG	//	4J4		2.625" x 0.220"	2.6249-2.6251	2.967	65.432 g				
			PGA(BAEL)	⊥	4J5		2.625" x 0.220"	2.6251-2.6253	2.827	6.377"				
			G5	⊥	4J6		2.625" x 0.220"	2.6247-2.6249	2.940					
		53.80"	G9	⊥	4J7	55.4"	2.625" x 0.220"	2.6249-2.6250	2.905					
			IG	⊥	4J8		2.625" x 0.220"	2.6248-2.6251	2.921					
			PGA(BAEL)	//	4I1		2.625" x 0.220"	2.6245-2.6250	2.817					
			G5	//	4I2		2.625" x 0.220"	2.6246-2.6247	2.943					
		53.80"	G9	//	4I3	51.9"	2.625" x 0.220"	2.6256	2.909					
4I	16/4/5		CL	//	4I4		2.625" x 0.220"	2.6247-2.6255	2.895	65.656 g				
			PGA(BAEL)	⊥	4I5		2.625" x 0.220"	2.6247-2.6248	2.820	6.377"				
			G5	⊥	4I6		2.625" x 0.220"	2.6250-2.6251	2.961					
		47.43"	G9	⊥	4I7	49.3"	2.625" x 0.220"	2.6248-2.6251	2.912					
↓			CL	⊥	4I8		2.625" x 0.220"	2.6258	2.875		Co	42938	481	47.7"
↑			PGA(BAEL)	//	4H1		2.625" x 0.220"	2.6253-2.6256	2.828		Ni	X	X	47.1"
			G5	//	4H2		2.625" x 0.220"	2.6252-2.6254	2.936					
		47.43"	G9	//	4H3	45.2"	2.625" x 0.220"	2.6253-2.6255	2.903					
4H	15/2/3		IG	//	4H4		2.625" x 0.220"	2.6246-2.6248	2.985	64.887 g				
			PGA(BAEL)	⊥	4H5		2.625" x 0.220"	2.6250-2.6254	2.823					
			G5	⊥	4H6		2.625" x 0.220"	2.6248	2.945	6.382"				
		41.05"	G9	⊥	4H7	42.6"	2.625" x 0.220"	2.6253	2.898					
			IG	⊥	4H8		2.625" x 0.220"	2.6248-2.6249	2.919					
			PGA(BAEL)	//	4G1		2.625" x 0.220"	2.6254-2.6258	2.837					
			G5	//	4G2		2.625" x 0.220"	2.6250-2.6251	2.989					
		41.05"	G9	//	4G3	39.1"	2.625" x 0.220"	2.6252	2.891					
4G	16/2/5		CL	//	4G4		2.625" x 0.220"	2.6257-2.6258	2.909	64.981 g				
			PGA(BAEL)	⊥	4G5		2.625" x 0.220"	2.6250-2.6252	2.829	6.381"				
			G5	⊥	4G6		2.625" x 0.220"	2.6248-2.6250	3.003					
		34.68"	G9	⊥	4G7	36.5"	2.625" x 0.220"	2.6250-2.6255	2.904					
↓			CL	⊥	4G8		2.625" x 0.220"	2.6259-2.6261	2.908		Co	42941	438	35.0"
↑			PGA(BAEL)	//	4F1		2.625" x 0.220"	2.6251-2.6253	2.819		Ni	X	X	34.4"
			G5	//	4F2		2.625" x 0.220"	2.6245	2.923					
		34.68"	G9	//	4F3	32.5"	2.625" x 0.220"	2.6258-2.6260	2.920					
4F	18/3/1		IG	//	4F4		2.625" x 0.220"	2.6247-2.6249	2.958	66.129 g				
			PGA(BAEL)	⊥	4F5		2.625" x 0.220"	2.6252-2.6254	2.839	6.382"				
			G5	⊥	4F6		2.625" x 0.220"	2.6250-2.6251	2.957					
		28.30"	G9	⊥	4F7	29.9"	2.625" x 0.220"	2.6252-2.6253	2.902					
			IG	⊥	4F8		2.625" x 0.220"	2.6246-2.6248	2.914					
			PGA(BAEL)	//	4E1		2.625" x 0.220"	2.6253-2.6255	2.812					
			G5	//	4E2		2.625" x 0.220"	2.6245-2.6246	2.945					
		28.30"	G9	//	4E3	26.4"	2.625" x 0.220"	2.6253-2.6255	2.883					
4E	15/2/5		CL	//	4E4		2.625" x 0.220"	2.6252-2.6254	2.884	66.578 g				
			PGA(BAEL)	⊥	4E5		2.625" x 0.220"	2.6250-2.6252	2.815	6.382"				
			G5	⊥	4E6		2.625" x 0.220"	2.6249-2.6251	2.943					
		21.93"	G9	⊥	4E7	23.8"	2.625" x 0.220"	2.6245	2.883					
↓			CL	⊥	4E8		2.625" x 0.220"	2.6255	2.938		Co	42937	444	22.2"
↑			PGA(BAEL)	//	4D1		2.625" x 0.220"	2.6252-2.6256	2.845		Ni	X	X	21.6"
			G5	//	4D2		2.625" x 0.220"	2.6252	2.922					
		21.93"	G9	//	4D3	19.7"	2.625" x 0.220"	2.6255-2.6258	2.874					
4D	18/2/5		IG	//	4D4		2.625" x 0.220"	2.6245-2.6250	2.895	65.592 g				
			PGA(BAEL)	⊥	4D5		2.625" x 0.220"	2.6246-2.6248	2.822	6.381"				
			G5	⊥	4D6		2.625" x 0.220"	2.6250	2.947					
		15.56"	G9	⊥	4D7	17.1"	2.625" x 0.220"	2.6250-2.6252	2.913					
			IG	⊥	4D8		2.625" x 0.220"	2.6245-2.6247	2.906					
			PGA(BAEL)	//	4C1		2.625" x 0.220"	2.6251-2.6254	2.826					
			G5	//	4C2		2.625" x 0.220"	2.6244-2.6246	2.944					
		15.56"	G9	//	4C3	13.6"	2.625" x 0.220"	2.6250	2.893					
4C	15/2/1		CL	//	4C4		2.625" x 0.220"	2.6254-2.6257	2.907	65.895 g				
			PGA(BAEL)	⊥	4C5		2.625" x 0.220"	2.6249-2.6253	2.844	6.380"				
			G5	⊥	4C6		2.625" x 0.220"	2.6251	2.951					
		9.19"	G9	⊥	4C7	11.0"	2.625" x 0.220"	2.6248-2.6252	2.910					
↓			CL	⊥	4C8		2.625" x 0.220"	2.6256-2.6257	2.918		Co	42932	477	9.5"
↑			PGA(BAEL)	//	4B1		2.625" x 0.220"	2.6251-2.6255	2.828		Ni	X	X	8.9"
			G5	//	4B2		2.625" x 0.220"	2.6250	2.971					
		9.19"	G9	//	4B3	7.0"	2.625" x 0.220"	2.6256-2.6259	2.894					
4B	16/4/5		IG	//	4B4		2.625" x 0.220"	2.6248-2.6250	2.959	64.798 g				
			PGA(BAEL)	⊥	4B5		2.625" x 0.220"	2.6246-2.6249	2.818	6.380"				
			G5	⊥	4B6		2.625" x 0.220"	2.6250	2.949					
		2.82"	G9	⊥	4B7	4.4"	2.625" x 0.220"	2.6252-2.6253	2.923					
			IG	⊥	4B8		2.625" x 0.220"	2.6250-2.6251	2.915					
4A	16/4/3	2.82" 0.00"	Solid spine of PGA(AGL), parallel, 2.82" long					-	-	36.509 g 2.820"				

Table 5

Rod No. 5

Spine number (marked on spine)	Other numbering on spine	Position of spine versus datum	Nature of specimens	Orientation of specimen axes	Identification number on specimens	Position of centre point of specimen versus datum	Nominal dimensions of specimen	Measured length of specimen before irradiation, inches	Weight of specimen before irradiation, grammes	Total weight and length of assembled spine including specimens and monitor, etc., before irradiation.	Pellet Monitors: Type	Pellet Monitors: Identification number	Pellet Monitors: Weight of metal, µg	Pellet Monitors: Position versus datum
5K	17/2/1	65.90" 60.18"	Solid spine of PGA(AGL), parallel, 5.72" long					-	-	77.568 g 5.716"				
↑			PGA(BAEL)	//	5J41	57.8	2.625" x 0.220"	2.6255-2.6257	2.875		Fe	F537	460	59.9"
			SP-AMT	//	B21	58.4	1.28" x 0.200"	1.2790	1.104					
		60.18"	SP-AMT	⊥	B48		1.28" x 0.200"	1.2772	1.107					
			CL-3780	//	E7		1.28" x 0.200"	1.2795	1.064					
			CL-3780	⊥	E41		1.28" x 0.200"	1.2808	1.055	66.477 g				
5J	16/4/3		RW-KR67	//	C2	57.1	1.28" x 0.200"	1.2620	1.124	6.381"				
			RW-KR67	⊥	C42		1.28" x 0.200"	1.2615	1.127					
		53.80"	CL-2239	//	D14		1.28" x 0.200"	1.2810	1.182					
			CL-2239	⊥	D62		1.28" x 0.200"	1.2808	1.113					
			PCI-26	//	5J42	55.25	2.4" x 0.475"	2.3635	13.071					
↑			PGA(BAEL)	//	5I43	51.6	2.625" x 0.220"	2.6249-2.6251	2.826		Fe	F546	424	53.5"
			SP-AMT	//	B24	52.2	1.28" x 0.200"	1.2800	1.096					
		53.80"	SP-AMT	⊥	B60		1.28" x 0.200"	1.2807	1.099					
			CL-3780	//	E10		1.28" x 0.200"	1.2810	1.048					
			CL-3780	⊥	E50		1.28" x 0.200"	1.2813	1.069					
			CL-2239	//	D28	50.9	1.28" x 0.200"	1.2810	1.181					
			CL-2239	⊥	D79		1.28" x 0.200"	1.2815	1.118					
			CL-3780	//	E13		1.28" x 0.200"	1.2798	1.037					
			CL-3780	⊥	E51		1.28" x 0.200"	1.2812	1.119	64.666 g				
5I	15/2/3		RW-KR67	//	C6	49.6	1.28" x 0.200"	1.2645	1.122	6.380"				
		47.43"	RW-KR67	⊥	C46		1.28" x 0.200"	1.2642	1.124					
			CL-2239	//	D18		1.28" x 0.200"	1.2810	1.180					
			CL-2239	⊥	D69		1.28" x 0.200"	1.2812	1.116					
			SP-AMT	//	B29	48.3	1.28" x 0.200"	1.2790	1.092					
			SP-AMT	⊥	B62		1.28" x 0.200"	1.2794	1.100					
			CL-3780	//	E23		1.28" x 0.200"	1.2807	1.062					
			CL-3780	⊥	E52		1.28" x 0.200"	1.2810	1.119					
			PGA(BAEL)	⊥	5I44	49.0	2.625" x 0.220"	2.6247-2.6250	2.838					
↑			PGA(BAEL)	//	5H45	45.2	2.625" x 0.220"	2.6249-2.6251	2.806		Fe	F551	444	47.1
			SP-AMT	//	B33	45.8	1.28" x 0.200"	1.2795	1.098					
		47.43"	SP-AMT	⊥	B73		1.28" x 0.200"	1.2800	1.107					
			CL-3780	//	E35		1.28" x 0.200"	1.2805	1.072					
			CL-3780	⊥	E75		1.28" x 0.200"	1.2812	1.114	65.265 g				
5H	18/4/5		{ Three unmeasured PGA spacers. }											
			RW-KR67	//	C8	43.2	1.28" x 0.200"	1.2795	1.135	6.378"				
		41.05"	RW-KR67	⊥	C48		1.28" x 0.200"	1.2612	1.127					
			CL-2239	//	D24		1.28" x 0.200"	1.2810	1.108					
			CL-2239	⊥	D76		1.28" x 0.200"	1.2810	1.113					
			SP-AMT	//	B36	41.9	1.28" x 0.200"	1.2790	1.101					
			SP-AMT	⊥	B75		1.28" x 0.200"	1.2785	1.100					
			CL-3780	//	E39		1.28" x 0.200"	1.2790	1.096					
			CL-3780	⊥	E79		1.28" x 0.200"	1.2812	1.062					
			PGA(BAEL)	⊥	5H46	42.6		2.6247-2.6248	2.822					
↑ 5G	15/2/3	41.05" 34.68"	PCI-37P3 PCI-37P3	// ⊥	5G1 5G2	38.9 36.1	3.2" x 0.475" 2.4" x 0.475"	3.1500 g 2.3610	17.230 g 12.943	72.257 g 6.381"	Fe	F544	432	40.7"
↑ 5F	15/4/1	34.68" 28.30"	PCI-36NP PCI-36NP	// ⊥	5F1 5F2	32.5 29.7	3.2" x 0.475" 2.4" x 0.475"	3.1518 2.3625	16.923 g 13.027 g	72.022 g 6.381"	Fe	F536	463	34.4"
↑ 5E	15/3/1	28.30" 21.93"	PCI-37P3 PCI-37P3	// ⊥	5E1 5E2	26.2 23.4	3.2" x 0.475" 2.4" x 0.475"	3.1512 2.3605	17.363 g 12.958 g	73.159 g 6.382"	Fe	F461	405	28.0"
↑ 5D	16/4/5	21.93" 15.56"	PCI-36NP PCI-36NP	// ⊥	5D1 5D2	19.8 17.0	3.2" x 0.475" 2.4" x 0.475"	3.1510 2.3635	17.052 g 12.918 g	71.997 g 6.381"	Fe	F540	456	21.6"
↑ 5C	16/4/3	15.56" 9.19"	PCI-37P3 PCI-37P3	// ⊥	5C1 5C2	13.4 10.6	3.2" x 0.475" 2.4" x 0.475"	3.1505 2.3625	17.434 g 13.041 g	72.597 g 6.382"	Fe	F543	408	15.3"
↑ 5B	16/3/5	9.19" 2.82"	PCI-36NP PCI-36NP	// ⊥	5B1 5B2	7.1 4.3	3.2" x 0.475" 2.4" x 0.475"	3.1520 2.3655	17.113 g 12.817 g	72.555 g 6.380"	Fe	F467	408	8.9"
5A	15/2/5	2.82" 0.00"	Solid spine of PGA(AGL), parallel, 2.82" long					-	-	36.734 g 2.819"				

Table 6

Rod No. 6

Spine number (marked on spine)	Other numbering on spine	Position of spine versus datum	Nature of specimens	Orientation of specimen axes	Identification number on specimens	Position of centre point of specimens versus datum	Nominal dimensions of specimen	Measured length of specimen before irradiation, inches	Weight of specimen before irradiation, grammes	Total weight and length of assembled spine including specimens and monitor, etc., before irradiation.	Pellet Monitors: Type	Identification number	Weight of metal, µg	Position versus datum
6K	15/4/1	65.9" 60.18"	Solid spine of PGA(AGL) parallel, 5.72" long					-	-	75.454 g 5.720"				
↑			PGA(BAEL)	//	6J1		2.625" x 0.220"	2.6255-2.6257	2.830		Fe	F541	670	59.9"
		60.18"	G5	//	6J2	) 58.0"	2.625" x 0.220"	2.6251	2.954					
			G9	//	6J3		2.625" x 0.220"	2.6254	2.902					
			IG	//	6J4		2.625" x 0.220"	2.6245-2.6248	2.832	65.035 g				
6J	15/1/5		PGA(BAEL)	⊥	6J5		2.625" x 0.220"	2.6249-2.6253	2.821	6.383"				
		53.80"	G5	⊥	6J6	) 55.4"	2.625" x 0.220"	2.6249	2.938					
			G9	⊥	6J7		2.625" x 0.220"	2.6251-2.6256	2.909					
			IG	⊥	6J8		2.625" x 0.220"	2.6245-2.6248	2.913					
			PGA(BAEL)	//	6I1		2.625" x 0.220"	2.6248-2.6252	2.834		Fe	F474	558	53.5"
		53.80"	G5	//	6I2	) 51.6"	2.625" x 0.220"	2.6253-2.6255	2.959					
			G9	//	6I3		2.625" x 0.220"	2.6255	2.913					
			CL	//	6I4		2.625" x 0.220"	2.6254	2.955	64.984 g				
6I	16/3/5		PGA(BAEL)	⊥	6I5		2.625" x 0.220"	2.6246-2.6247	2.835	6.378"				
		47.43"	G5	⊥	6I6	) 49.0"	2.625" x 0.220"	2.6248-2.6250	2.939					
			G9	⊥	6I7		2.625" x 0.220"	2.6250	2.932					
			CL	⊥	6I8		2.625" x 0.220"	2.6260	2.931					
			PGA(BAEL)	//	6H1		2.625" x 0.220"	2.6253-2.6255	2.846		Fe	F549	481	47.1"
		47.43"	G5	//	6H2	) 45.2"	2.625" x 0.220"	2.6251	2.940					
			G9	//	6H3		2.625" x 0.220"	2.6257	2.920					
			IG	//	6H4		2.625" x 0.220"	2.6248-2.6250	2.926	64.375 g				
6H	16/3/3		PGA(BAEL)	⊥	6H5		2.625" x 0.220"	2.6252-2.6254	2.835	6.380"				
		41.05"	G5	⊥	6H6	) 42.6"	2.625" x 0.220"	2.6250	2.940					
			G9	⊥	6H7		2.625" x 0.220"	2.6252-2.6253	2.915					
			IG	⊥	6H8		2.625" x 0.220"	2.6245-2.6249	2.889					
			PGA(BAEL)	//	6G1		2.625" x 0.220"	2.6249-2.6253	2.843		Fe	F465	401	40.7"
		41.05"	G5	//	6G2	) 38.8"	2.625" x 0.220"	2.6248	2.961					
			G9	//	6G3		2.625" x 0.220"	2.6254	2.871					
			CL	//	6G4		2.625" x 0.220"	2.6253	2.894	66.376 g				
6G	18/2/1		PGA(BAEL)	⊥	6G5		2.625" x 0.220"	2.6246-2.6248	2.822	6.380"				
		34.68"	G5	⊥	6G6	) 36.2"	2.625" x 0.220"	2.6249	2.953					
			G9	⊥	6G7		2.625" x 0.220"	2.6255	2.906					
			CL	⊥	6G8		2.625" x 0.220"	2.6254-2.6255	2.946					
			PGA(BAEL)	//	6F1		2.625" x 0.220"	2.6251-2.6254	2.831		Fe	F466	448	34.4"
		34.68"	G5	//	6F2	) 32.5"	2.625" x 0.220"	2.6246-2.6248	2.981					
			G9	//	6F3		2.625" x 0.220"	2.6255	2.898					
			IG	//	6F4		2.625" x 0.220"	2.6249-2.6253	2.901	65.213 g				
6F	15/2/5		PGA(BAEL)	⊥	6F5		2.625" x 0.220"	2.6247-2.6249	2.852	6.379"				
		28.30"	G5	⊥	6F6	) 29.9"	2.625" x 0.220"	2.6250	2.947					
			G9	⊥	6F7		2.625" x 0.220"	2.6256	2.881					
			IG	⊥	6F8		2.625" x 0.220"	2.6248-2.6251	2.872					
			PGA(BAEL)	//	6E1		2.625" x 0.220"	2.6252-2.6254	2.822		Fe	F542	426	28.0"
		28.30"	G5	//	6E2	) 26.1"	2.625" x 0.220"	2.6247-2.6248	2.924					
			G9	//	6E3		2.625" x 0.220"	2.6252	2.908					
			CL	//	6E4		2.625" x 0.220"	2.6252-2.6253	2.914	66.285 g				
6E	17/3/5		PGA(BAEL)	⊥	6E5		2.625" x 0.220"	2.6250-2.6254	2.827	6.380"				
		21.93"	G5	⊥	6E6	) 23.5"	2.625" x 0.220"	2.6248-2.6249	2.933					
			G9	⊥	6E7		2.625" x 0.220"	2.6252	2.887					
			CL	⊥	6E8		2.625" x 0.220"	2.6252	2.895					
			PGA(BAEL)	//	6D1		2.625" x 0.220"	2.6249-2.6250	2.834		Fe	F550	435	21.6"
		21.93"	G5	//	6D2	) 19.7"	2.625" x 0.220"	2.6251-2.6252	2.977					
			G9	//	6D3		2.625" x 0.220"	2.6253-2.6254	2.868					
			IG	//	6D4		2.625" x 0.220"	2.6245-2.6250	2.874	65.223 g				
6D	15/3/5		PGA(BAEL)	⊥	6D5		2.625" x 0.220"	2.6250-2.6252	2.825	6.379"				
		15.56"	G5	⊥	6D6	) 17.1"	2.625" x 0.220"	2.6252-2.6253	2.964					
			G9	⊥	6D7		2.625" x 0.220"	2.6253-2.6254	2.901					
			IG	⊥	6D8		2.625" x 0.220"	2.6248-2.6252	2.898					
			PGA(BAEL)	//	6C1		2.625" x 0.220"	2.6252-2.6254	2.839		Fe	F538	452	15.3"
		15.56"	G5	//	6C2	) 13.4"	2.625" x 0.220"	2.6254-2.6255	2.955					
			G9	//	6C3		2.625" x 0.220"	2.6254	2.914					
			CL	//	6C4		2.625" x 0.220"	2.6256-2.6257	2.914	65.312 g				
6C	18/4/1		PGA(BAEL)	⊥	6C5		2.625" x 0.220"	2.6249-2.6253	2.810	6.378"				
		9.19"	G5	⊥	6C6	) 10.8"	2.625" x 0.220"	2.6251	2.949					
			G9	⊥	6C7		2.625" x 0.220"	2.6255-2.6256	2.935					
			CL	⊥	6C8		2.625" x 0.220"	2.6261	2.919					
			PGA(BAEL)	//	6B1		2.625" x 0.220"	2.6253-2.6255	2.876		Fe	F547	447	8.9"
		9.19"	G5	//	6B2	) 7.0"	2.625" x 0.220"	2.6251-2.6252	2.981					
			G9	//	6B3		2.625" x 0.220"	2.6255-2.6256	2.874					
			IG	//	6B4		2.625" x 0.220"	2.6245-2.6249	2.969	66.167 g				
6B	16/4/1		PGA(BAEL)	⊥	6B5		2.625" x 0.220"	2.6242-2.6245	2.841	6.381"				
		2.82"	G5	⊥	6B6	) 4.4"	2.625" x 0.220"	2.6246-2.6247	2.940					
			G9	⊥	6B7		2.625" x 0.220"	2.6253-2.6256	2.916					
			IG	⊥	6B8		2.625" x 0.220"	2.6250-2.6251	2.888					
6A	17/2/1	2.82" 0.00"	Solid spine of PGA(AGL), parallel, 2.82" long					-	-	37.645 g 2.813"				

Table 7

Rod No. 7

Spine number (marked on spine)	Other numbering on spine	Position of spine versus datum	Nature of specimens	Orientation of specimen axes	Identification number on specimen	Position of centre point of specimens versus datum	Nominal dimensions of specimen	Measured length of specimen before irradiation, inches	Weight of specimen before irradiation, grammes	Total weight and length of assembled spine including specimens and monitor, etc., before irradiation.	Pellet Monitors: Type	Pellet Monitors: Identification number	Pellet Monitors: Weight of metal, µg	Pellet Monitors: Position versus datum
7K	16/4/3	65.90" 60.18"	Solid spine of PGA(AGL), parallel, 5.72" long, includes cap and monitor					-	-	71.000 g 5.722"	Co	42940	480	60.5"
↑		60.18"	PGA(BAEL)	//	7J1	58.0"	2.625" x 0.220"	2.6253-2.6255	2.828		Ni	X	X	59.9"
			G5	//	7J2		2.625" x 0.220"	2.6248-2.6249	2.948					
			G9	//	7J3		2.625" x 0.220"	2.6255-2.6256	2.903					
7J	18/4/5		IG	//	7J4		2.625" x 0.220"	2.6248-2.6251	2.950	65.389 g				
		53.80"	PGA(BAEL)	⊥	7J5	55.4"	2.625" x 0.220"	2.6242-2.6245	2.826	6.383"				
			G5	⊥	7J6		2.625" x 0.220"	2.6247	2.950					
			G9	⊥	7J7		2.625" x 0.220"	2.6250-2.6251	2.891					
			IG	⊥	7J8		2.625" x 0.220"	2.6246-2.6250	2.900					
		53.80"	PGA(BAEL)	//	7I1	51.9"	2.625" x 0.220"	2.6256-2.6258	2.848					
			G5	//	7I2		2.625" x 0.220"	2.6254-2.6257	2.957					
			G9	//	7I3		2.625" x 0.220"	2.6254	2.874					
7I	18/2/1		CL	//	7I4		2.625" x 0.220"	2.6252-2.6253	2.906	65.562 g				
		47.43"	PGA(BAEL)	⊥	7I5	49.3"	2.625" x 0.220"	2.6253-2.6256	2.834	6.381"				
			G5	⊥	7I6		2.625" x 0.220"	2.6251-2.6252	2.925					
			G9	⊥	7I7		2.625" x 0.220"	2.6252-2.6254	2.915					
↓			CL	⊥	7I8		2.625" x 0.220"	2.6255-2.6256	2.907		Co	42939	465	47.7"
↑		47.43"	PGA(BAEL)	//	7H1	45.2"	2.625" x 0.220"	2.6249-2.6251	2.832		Ni	X	X	47.1"
			G5	//	7H2		2.625" x 0.220"	2.6252-2.6254	2.953					
			G9	//	7H3		2.625" x 0.220"	2.6254-2.6255	2.894					
7H	18/1/3		IG	//	7H4		2.625" x 0.220"	2.6246-2.6252	2.893	65.163 g				
		41.05"	PGA(BAEL)	⊥	7H5	42.6"	2.625" x 0.220"	2.6252-2.6255	2.829	6.380"				
			G5	⊥	7H6		2.625" x 0.220"	2.6252-2.6253	2.952					
			G9	⊥	7H7		2.625" x 0.220"	2.6254-2.6255	2.887					
			IG	⊥	7H8		2.625" x 0.220"	2.6254-2.6256	2.909					
		41.05"	PGA(BAEL)	//	7G1	39.1"	2.625" x 0.220"	2.6251-2.6253	2.847					
			G5	//	7G2		2.625" x 0.220"	2.6254-2.6255	2.991					
			G9	//	7G3		2.625" x 0.220"	2.6254	2.897					
7G	15/4/3		CL	//	7G4		2.625" x 0.220"	2.6249	2.912	64.574 g				
		34.68"	PGA(BAEL)	⊥	7G5	36.5"	2.625" x 0.220"	2.6250-2.6252	2.838	6.379"				
			G5	⊥	7G6		2.625" x 0.220"	2.6254-2.6255	2.960					
			G9	⊥	7G7		2.625" x 0.220"	2.6252-2.6254	2.892					
↓			CL	⊥	7G8		2.625" x 0.220"	2.6253-2.6256	2.961		Co	42944	447	35.0"
↑		34.68"	PGA(BAEL)	//	7F1	32.5"	2.625" x 0.220"	2.6256-2.6257	2.847		Ni	X	X	34.4"
			G5	//	7F2		2.625" x 0.220"	2.6254-2.6255	2.937					
			G9	//	7F3		2.625" x 0.220"	2.6253-2.6254	2.884					
7F	15/4/5		IG	//	7F4		2.625" x 0.220"	2.6246-2.6250	2.870	64.511 g				
		28.30"	PGA(BAEL)	⊥	7F5	29.9"	2.625" x 0.220"	2.6247-2.6249	2.822	6.377"				
			G5	⊥	7F6		2.625" x 0.220"	2.6247-2.6248	2.944					
			G9	⊥	7F7		2.625" x 0.220"	2.6251	2.919					
			IG	⊥	7F8		2.625" x 0.220"	2.6250-2.6253	2.908					
		28.30"	PGA(BAEL)	//	7E1	26.4"	2.625" x 0.220"	2.6253-2.6255	2.877					
			G5	//	7E2		2.625" x 0.220"	2.6248-2.6250	2.925					
			G9	//	7E3		2.625" x 0.220"	2.6253-2.6254	2.903					
7E	15/2/5		CL	//	7E4		2.625" x 0.220"	2.6257-2.6258	2.860	66.026 g				
		21.93"	PGA(BAEL)	⊥	7E5	23.8"	2.625" x 0.220"	2.6252-2.6255	2.840	6.378"				
			G5	⊥	7E6		2.625" x 0.220"	2.6248-2.6250	2.960					
			G9	⊥	7E7		2.625" x 0.220"	2.6250-2.6251	2.912					
↓			CL	⊥	7E8		2.625" x 0.220"	2.6241-2.6242	2.942		Co	42934	480	22.2"
↑		21.93"	PGA(BAEL)	//	7D1	19.7"	2.625" x 0.220"	2.6252-2.6255	2.848		Ni	X	X	21.6"
			G5	//	7D2		2.625" x 0.220"	2.6249-2.6250	2.930					
			G9	//	7D3		2.625" x 0.220"	2.6257	2.875					
7D	18/1/3		IG	//	7D4		2.625" x 0.220"	2.6245-2.6247	2.933	65.179 g				
		15.56"	PGA(BAEL)	⊥	7D5	17.1"	2.625" x 0.220"	2.6250-2.6252	2.826	6.379"				
			G5	⊥	7D6		2.625" x 0.220"	2.6247-2.6249	2.955					
			G9	⊥	7D7		2.625" x 0.220"	2.6252	2.911					
			IG	⊥	7D8		2.625" x 0.220"	2.6242-2.6247	2.908					
		15.56"	PGA(BAEL)	//	7C1	13.6"	2.625" x 0.220"	2.6248-2.6250	2.896					
			G5	//	7C2		2.625" x 0.220"	2.6246-2.6247	2.966					
			G9	//	7C3		2.625" x 0.220"	2.6250-2.6251	2.908					
7C	16/3/3		CL	//	7C4		2.625" x 0.220"	2.6254	2.921	65.155 g				
		9.19"	PGA(BAEL)	⊥	7C5	11.0"	2.625" x 0.220"	2.6249-2.6251	2.798	6.381"				
			G5	⊥	7C6		2.625" x 0.220"	2.6249	2.948					
			G9	⊥	7C7		2.625" x 0.220"	2.6251-2.6252	2.882					
↓			CL	⊥	7C8		2.625" x 0.220"	2.6258-2.6259	2.903		Co	42931	493	9.5"
↑		9.19"	PGA(BAEL)	//	7B1	7.0"	2.625" x 0.220"	2.6246-2.6248	2.824		Ni	X	X	8.9"
			G5	//	7B2		2.625" x 0.220"	2.6250-2.6251	2.938					
			G9	//	7B3		2.625" x 0.220"	2.6256-2.6258	2.887					
7B	16/2/5		IG	//	7B4		2.625" x 0.220"	2.6245-2.6250	2.920	64.532 g				
		2.82"	PGA(BAEL)	⊥	7B5	4.4"	2.625" x 0.220"	2.6253-2.6256	2.824	6.380"				
			G5	⊥	7B6		2.625" x 0.220"	2.6248-2.6249	2.938					
			G9	⊥	7B7		2.625" x 0.220"	2.6254-2.6255	2.892					
			IG	⊥	7B8		2.625" x 0.220"	2.6246-2.6250	2.861					
7A		2.82" 0.00"	Solid spine of PGA(AGL), parallel, 2.82" long					-	-	37.6 2.818"				

TYPE D2
THERMOCOUPLE
ARRANGEMENT
AF (b)

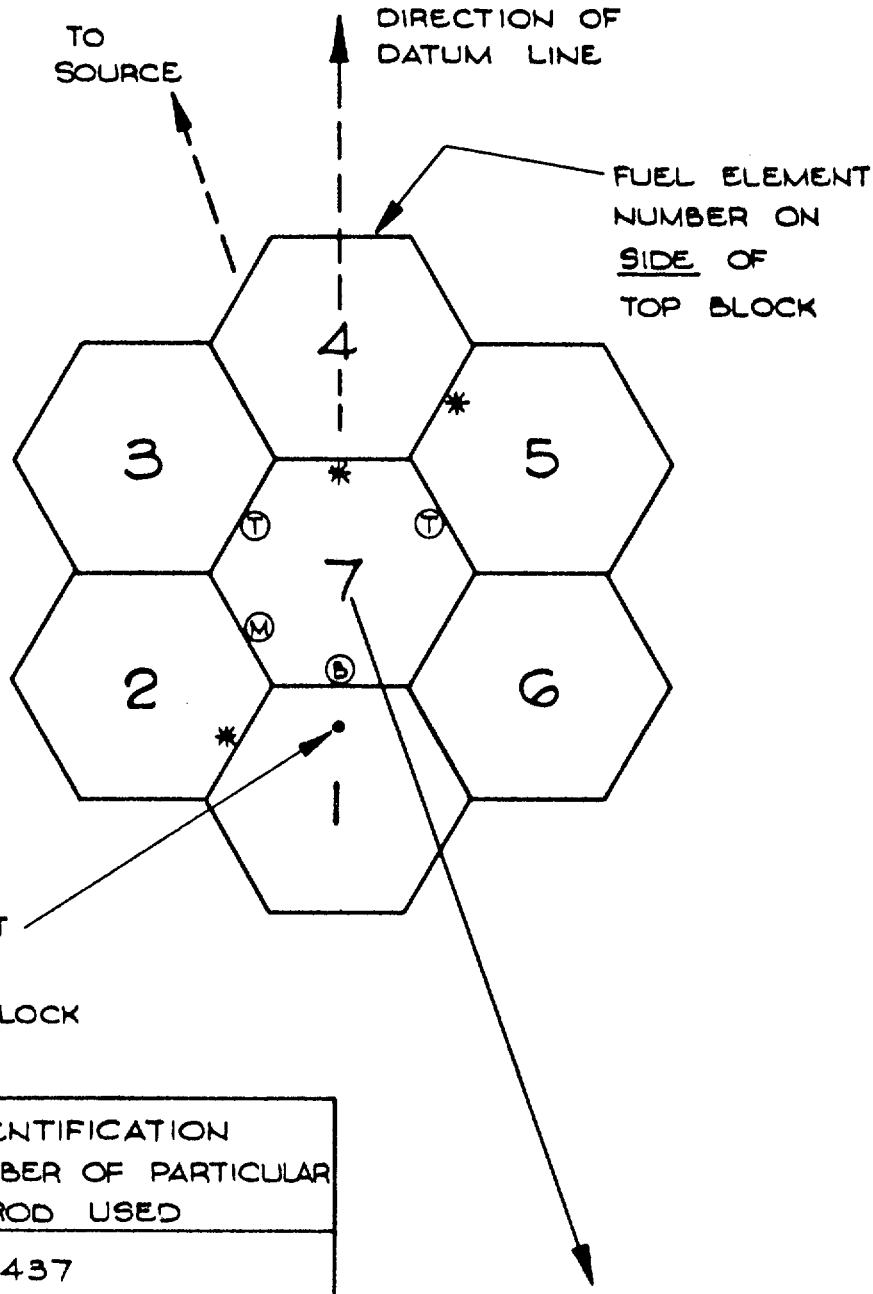

POSITION NUMBER	IDENTIFICATION NUMBER OF PARTICULAR ROD USED
1	0437
2	0382
3	0460
4	0512
5	0506
6	0510
7	0142

* METAL FLUX MONITOR STRINGERS

○ ROD SURFACE THERMOCOUPLES (TOP, MIDDLE & BOTTOM)

FIG. 1 PLAN OF ELEMENT 3/1 SHOWING NUMBERING OF RODS AND THEIR ORIENTATION IN THE REACTOR

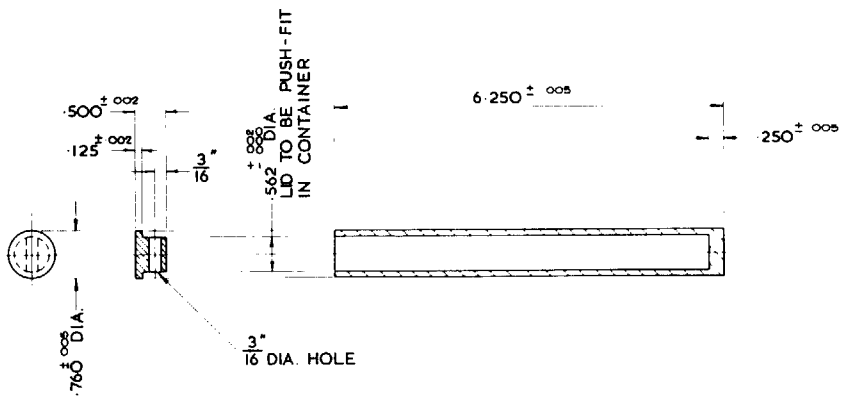

MATERIAL :- GRAPHITE. PILE GRADE 'A'
EXTRUSION AXIS TO BE PARALLEL TO AXIS OF BOTH CONTAINER & LID

a) SPINE SAMPLE CONTAINER & LID

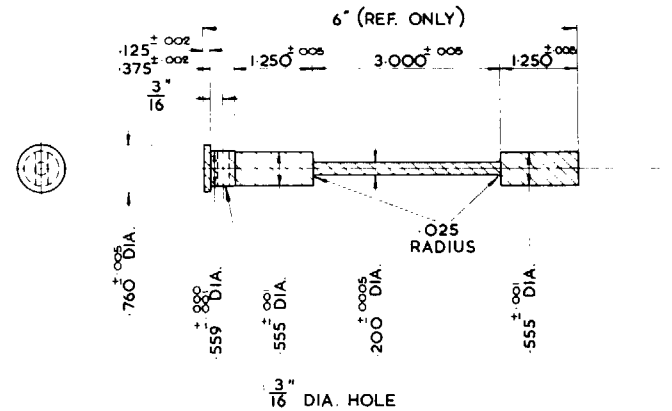

MATERIAL :- GRAPHITE EYX 60.
AXIS OF DUMB-BELL TO BE PARALLEL WITH EXTRUSION AXIS.

b) CREEP - STRAIN DUMB - BELL

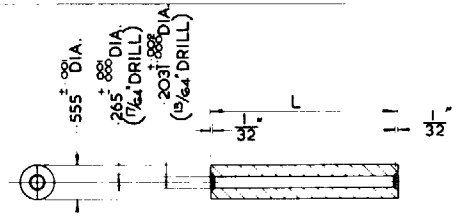

NOTE :- THE SLEEVE IS LONGITUDINALLY SPLIT INTO TWO IDENTICAL PORTIONS. A GOOD MATING IS REQUIRED: i.e. A SINGLE CYLINDER CANNOT MERELY BE SAWN IN HALF : TWO SEPARATE PORTIONS MUST BE MANUFACTURED.

TABLE SHOWING VALUES OF L:

2·994	± 0·0005"
2·995	"
2·996	"
2·997	"
2·998	"

MATERIAL:- GRAPHITE, PILE GRADE 'A'.
SLEEVE AXIS TO BE AT RIGHT ANGLES TO EXTRUSION DIRECTION.

c) CREEP - STRAIN SLEEVE

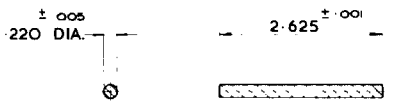

MATERIAL :- GRAPHITE AS SUPPLIED. AXIS ORIENTATION AS SPECIFICATION.

d) SAMPLES

FIG. 2 DETAIL DRAWING OF THE SPECIMENS AND CONTAINERS

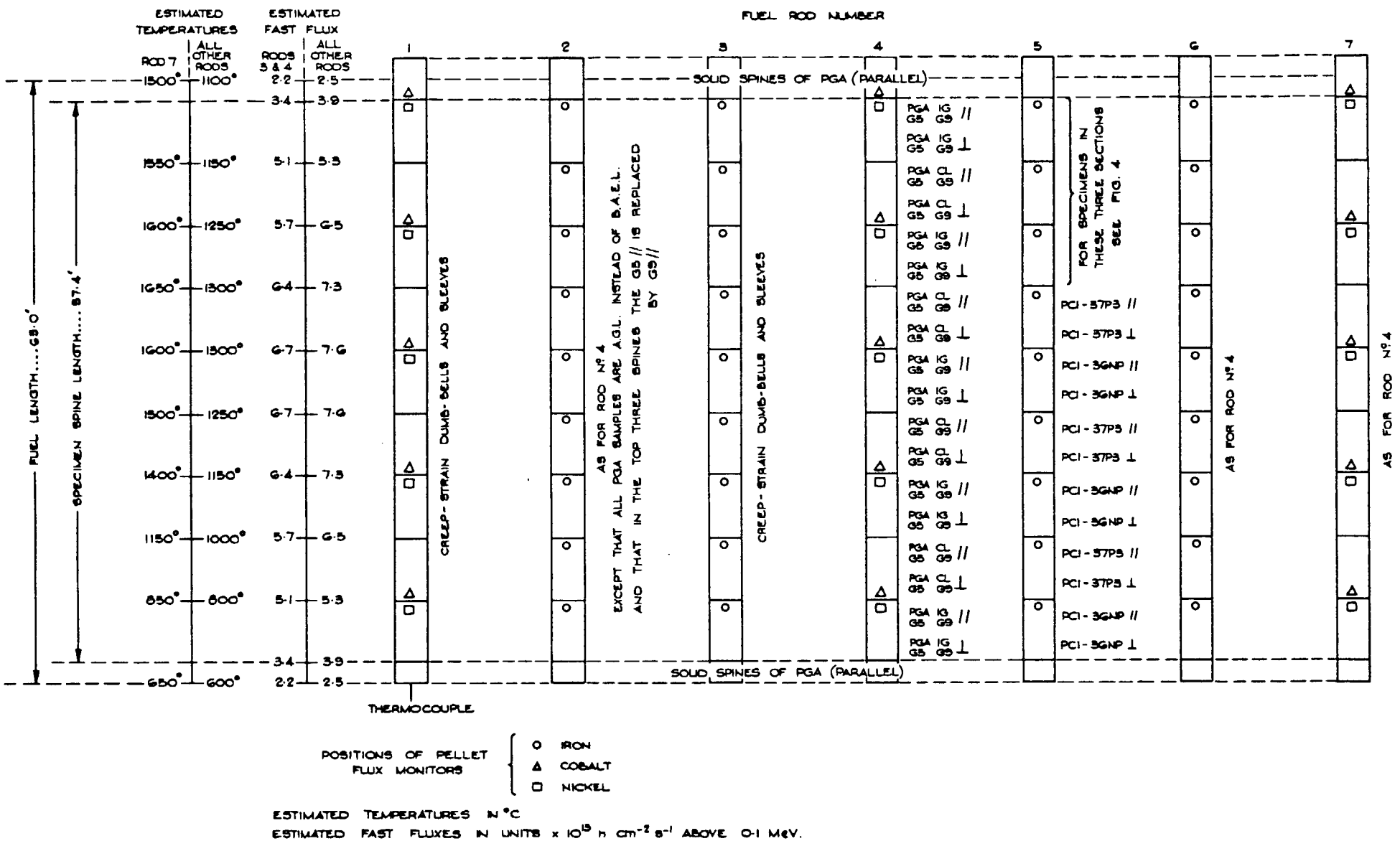

FIG. 3 DISPOSITION OF THE SPECIMENS AND MONITORS WITH AN ESTIMATE OF THE TEMPERATURES AND FLUXES.

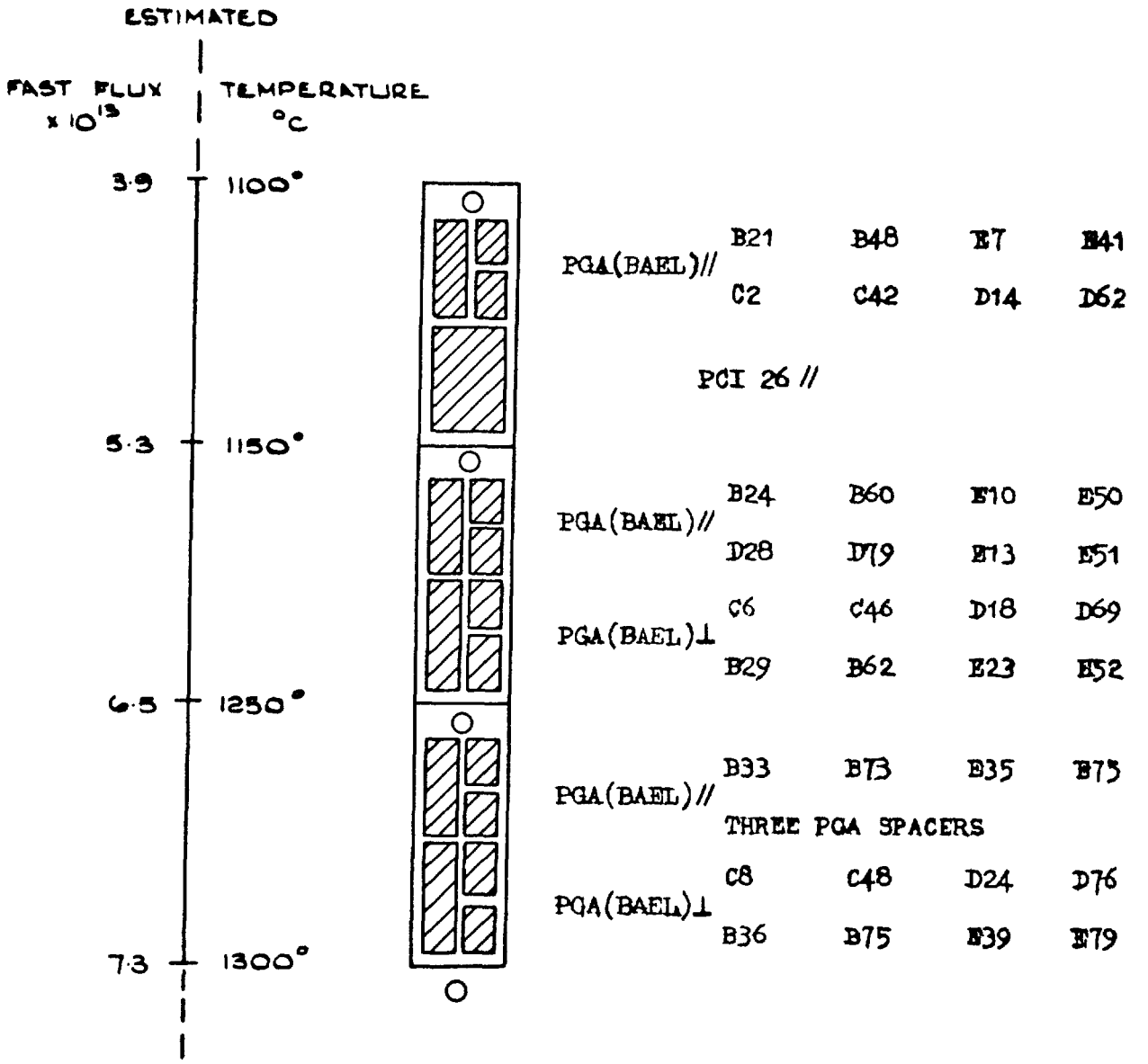

B21 to B36 inclusive	Siemens-Plania AMT //
B48 to B75 inclusive	Siemens-Plania AMT ⊥
C2 to C8 inclusive	Ringsdorff Werke KR67 //
C42 to C48 inclusive	Ringsdorff Werke KR67 ⊥
D14 to D28 inclusive	Carbone-Lorraine 2239 //
D62 to D79 inclusive	Carbone-Lorraine 2239 ⊥
E7 to E39 inclusive	Carbone-Lorraine 3780 //
E41 to E79 inclusive	Carbone-Lorraine 3780 ⊥

PC1 26 // A Pechiney graphite.

Fig. 4 DISPOSITION OF SPECIMENS IN THE TOP THREE SPINE SECTIONS OF ROD NO. 5.

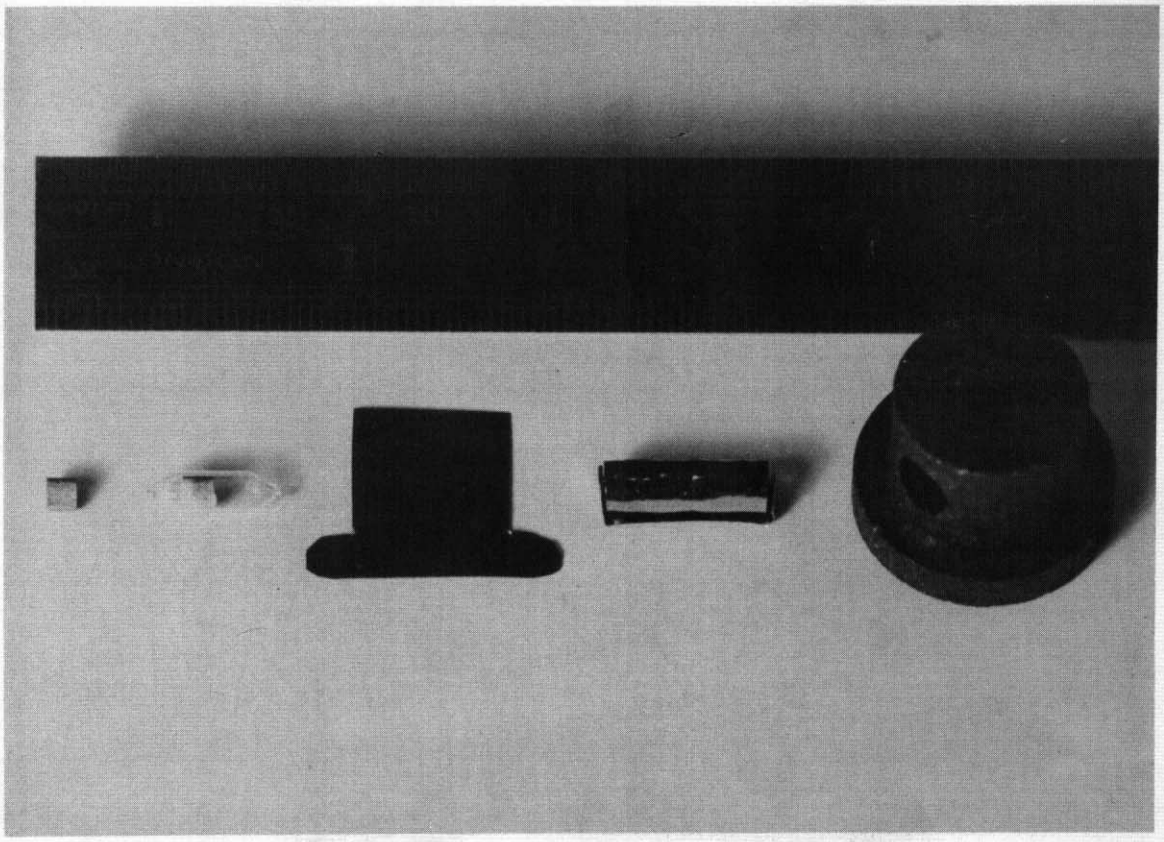

Fig. 5 The Pellet Flux Monitor

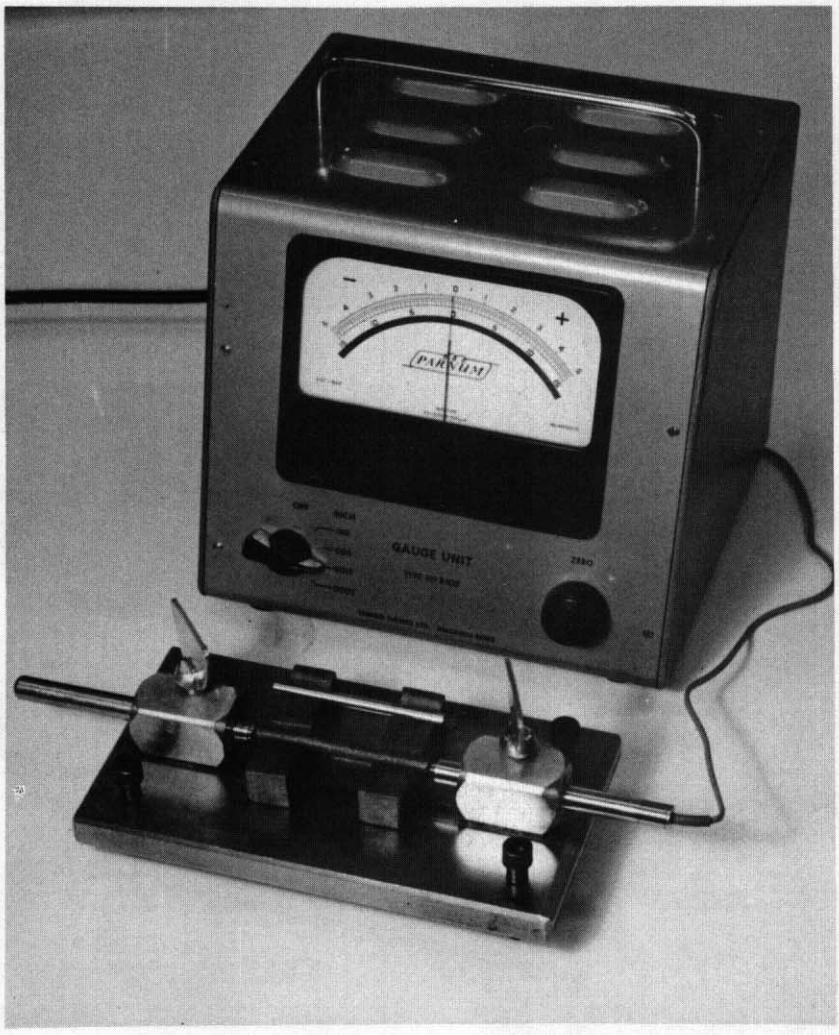

Fig. 6 The Length Comparator

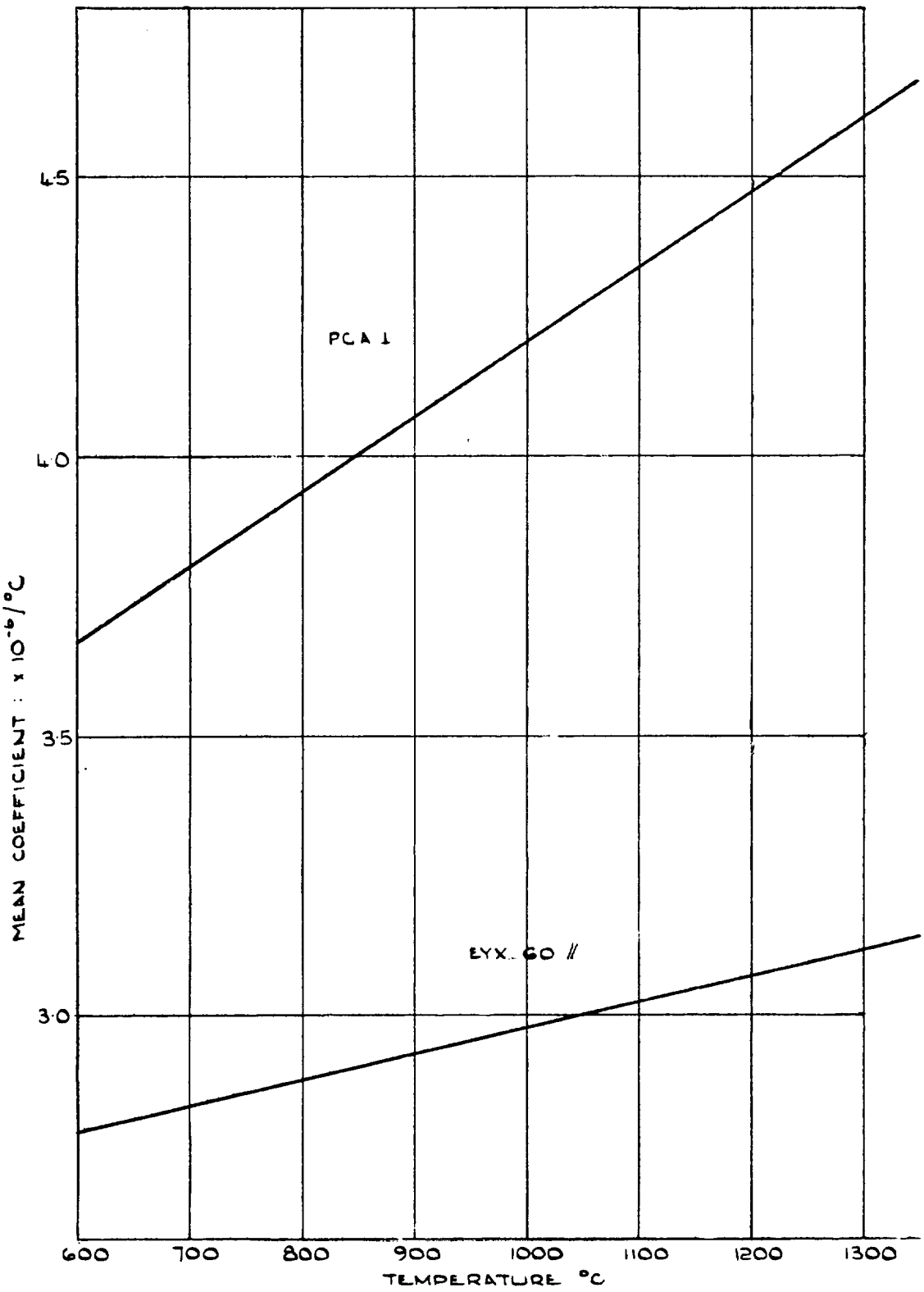

FIG.7 THE MEAN COEFFICIENT OF THERMAL EXPANSION OF PCA & DRAGON GRADE 9 FROM 20°C

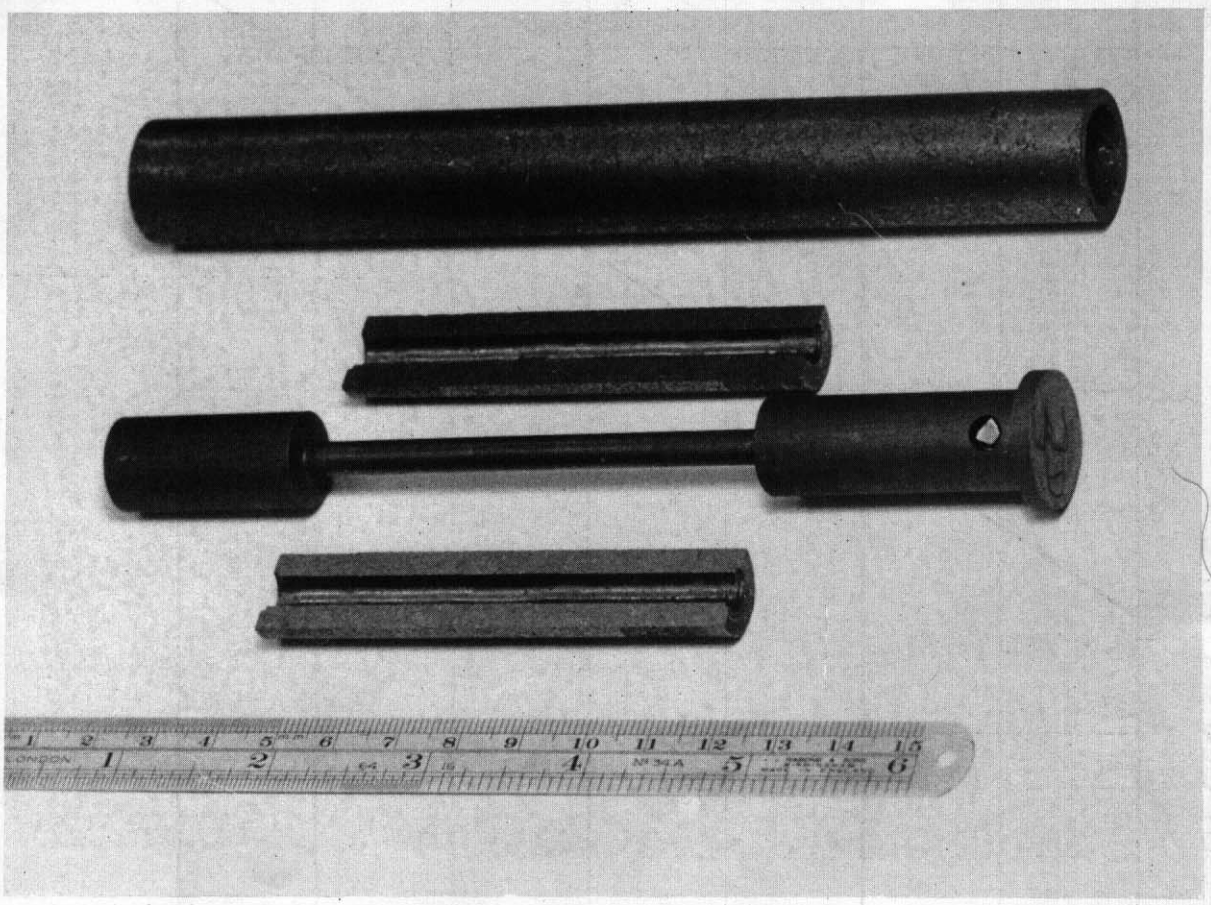

Fig. 8 The Creep-Strain Components

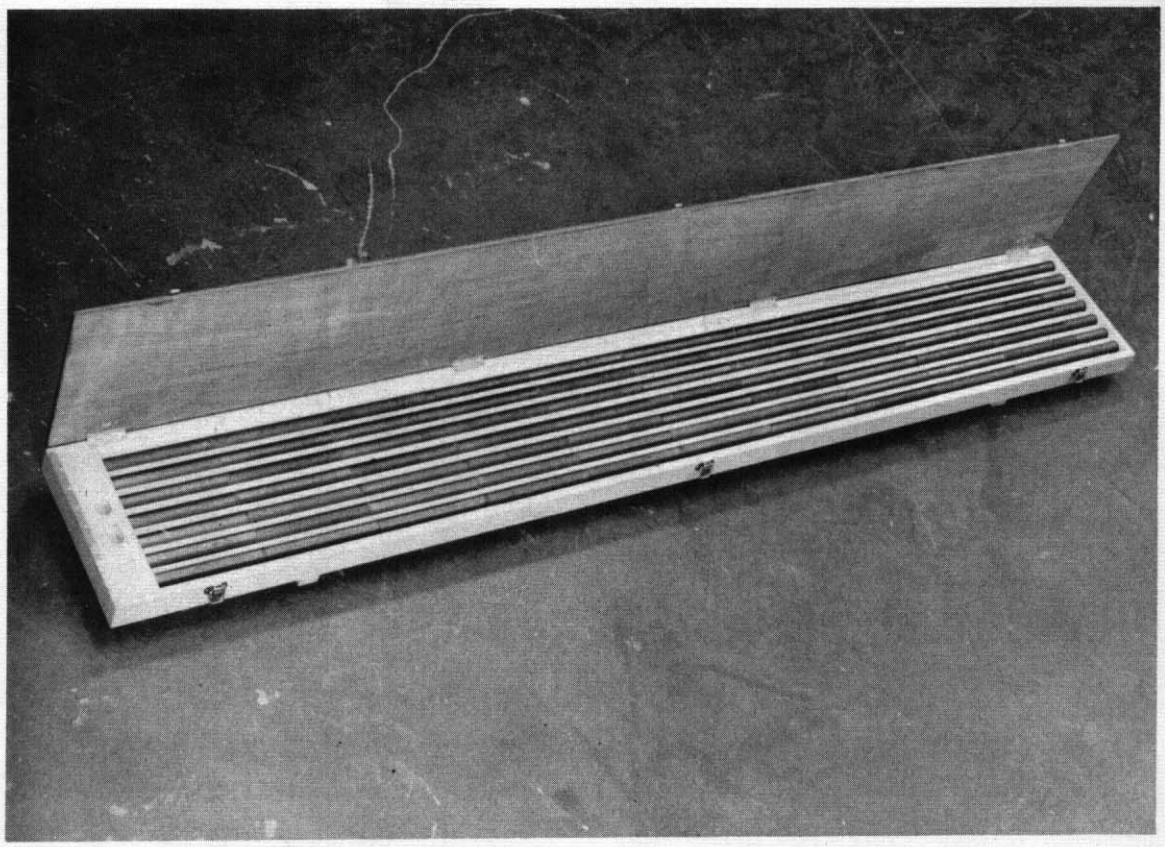

Fig. 9 The Assembled Spines in Transport Box