HW-68789

METALS, CERAMICS, AND MATERIALS

A FLUX-FREE METHOD FOR JOINING ALUMINUM TO STAINLESS STEEL

By
L. C. Lemon

March 1961

Hanford Atomic Products Operation
General Electric Company
Richland, Washington

UNITED STATES ATOMIC ENERGY COMMISSION • DIVISION OF TECHNICAL INFORMATION

DISCLAIMER

This report was prepared as an account of work sponsored by an agency of the United States Government. Neither the United States Government nor any agency Thereof, nor any of their employees, makes any warranty, express or implied, or assumes any legal liability or responsibility for the accuracy, completeness, or usefulness of any information, apparatus, product, or process disclosed, or represents that its use would not infringe privately owned rights. Reference herein to any specific commercial product, process, or service by trade name, trademark, manufacturer, or otherwise does not necessarily constitute or imply its endorsement, recommendation, or favoring by the United States Government or any agency thereof. The views and opinions of authors expressed herein do not necessarily state or reflect those of the United States Government or any agency thereof.

DISCLAIMER

Portions of this document may be illegible in electronic image products. Images are produced from the best available original document.

LEGAL NOTICE

This report was prepared as an account of Government sponsored work. Neither the United States, nor the Commission, nor any person acting on behalf of the Commission.

A. Makes any warranty or representation, expressed or implied, with respect to the accuracy, completeness, or usefulness of the information contained in this report, or that the use of any information, apparatus, method, or process disclosed in this report may not infringe privately owned rights; or

B. Assumes any liabilities with respect to the use of, or for damages resulting from the use of any information, apparatus, method, or process disclosed in this report.

As used in the above, "person acting on behalf of the Commission" includes any employee or contractor of the Commission, or employee of such contractor, to the extent that such employee or contractor of the Commission, or employee of such contractor prepares, disseminates, or provides access to, any information pursuant to his employment or contract with the Commission, or his employment with such contractor.

This report has been reproduced directly from the best available copy.

Printed in USA. Price $0.50. Available from the Office of Technical Services, Department of Commerce, Washington 25, D. C.

USAEC Division of Technical Information Extension, Oak Ridge, Tennessee

HW-68789

A FLUX-FREE METHOD FOR JOINING ALUMINUM TO STAINLESS STEEL

By

L. C. Lemon

Plutonium Metallurgy
Reactor and Fuels Research and Development
Hanford Laboratories Operation

March, 1961

HANFORD ATOMIC PRODUCTS OPERATION
RICHLAND, WASHINGTON

Work performed under Contract No. AT(45-1)-1350 between the Atomic Energy Commission and General Electric Company

A FLUX-FREE METHOD FOR JOINING ALUMINUM TO STAINLESS STEEL

INTRODUCTION

In the course of assembling parts for a thermocouple test assembly, it became necessary to join aluminum to low carbon stainless steel. The specifications were as follows: (1) the bond must be made without the use of flux; the bond must be gastight in 120 F water and withstand pressure up to 300 psi ; and (3) the bonded joint must pass a mass spectrometer leak test.

DISCUSSION

Various methods for joining aluminum to aluminum or to dissimilar metals are used currently, such as brazing, welding, diffusion bonding, resin bonding, and soldering. However, there are inherent disadvantages or limitations in all these methods. For example, brazing and welding call for high temperatures which soften or melt the aluminum and in turn distort the pieces to be joined. Diffusion bonding, which is carried out at high pressures and temperatures, likewise is conducive to distortion of the aluminum and also often fails to effect a joint of sufficiently high strength. Resin bonding, which utilizes an organic adhesive at relatively low temperatures, also fails to provide a high strength joint.

Soldering techniques for joining aluminum usually produce unsatisfactory joints, particularly with other metals. Most methods developed for joining aluminum by soldering require special solders -- alloys that are usually rich in zinc and tin. In one such method, the pieces to be joined are heated and butted together while a bar of aluminum solder is rubbed along the surfaces to be soldered. As the pieces heat up to the melting point of the solder, the oxide film on the aluminum softens and is scraped away by the rubbing. Therefore, when the aluminum pieces reach the melting temperature of the solder, it is in intimate contact with cleansed portions of the alumimun pieces and will alloy at once to join the aluminum pieces. This method of

joining aluminum may be used when the surfaces to be joined are accessible for rubbing while applying solder. However, when these surfaces are inaccessible, a flux must be used to keep them free from oxide while solder is applied. Fluxes for soldering usually contain salts which unaviodably become occluded in the soldered joint and which, in the presence of moisture, cause corrosion and destruction of the joint by electrolytic action. Therefore, the use of fluxes should be avoided in the soldering of aluminum.

Aluminum and its alloys can be soldered to dissimilar metals by various methods with varying success, depending to a great extent on the nature of the dissimilar metal. In some cases, it has been necessary to first electroplate the aluminum with copper to join the dissimilar metals securely. Understandably the copper electroplating of aluminum is time consuming, expensive and, therefore, undesirable.

Prior to the present method, stainless steel was a most difficult metal to join satisfactorily to aluminum by soldering. Grouped under the term stainless steel are many different alloys of steel, all of which contain chromium or chromium-nickel additions. One commonly used alloy contains 18 per cent chromium and 8 per cent nickel and often is referred to as an 18-8 stainless steel. For a satisfactory bond, fluxing with zinc chloride-ammonium chloride containing hydrochloric acid or with an orthophosphoric acid is usually required before joining stainless steel surfaces by soldering. As with aluminum soldering, the unavoidable occlusion of flux gradually corrodes and destroys the joint by electrolytic action in the presence of moisture. Therefore, a method of soldering stainless steel without the flux is highly desirable.

The procedure described in this report makes it possible to join aluminum to stainless steel at low temperatures by soldering without the use of flux. The former disadvantages are eliminated. Neither distortion of the pieces to be joined nor corrosion and destruction of the joint occurs. Aluminum can be joined to stainless steel to form a high strength bond.

DETAILS

The stainless steel is cleaned with an abrasive, washed in trichloroethylene, coated with a solution of equal parts of water and concentrated hydrochloric acid, preheated to 450 F, tinned with 50 per cent lead, 50 per cent tin solder, and rinsed with hot water to remove any acid that may not have been removed by the preheating.

The aluminum is cleaned with abrasive and washed in trichloroethylene. After preheating to about 650 F, it is tinned with aluminum solder, consisting of approximately 1 per cent silver, 0.01 per cent aluminum, 0.01 per cent copper, 1 per cent iron, 1 per cent lead, 0.1 per cent silicon and the balance tin. Aluminum solder of this composition is available from various commercial sources. The two surfaces then are placed in contact and heated to 500 - 600 F with an oxy-acetylene flame. The aluminum solder and the lead-tin solder alloy readily to form a gastight joint.

Figure 1 shows a socket joint specimen prepared with 1/2-inch diameter AISI 304 SS and 1/2-inch diameter 6061 aluminum pipe. The bond was subjected to a pneumatic pressure of 125 psi, leak checked with a mass spectrometer, and tested in tension. Table I shows that the aluminum ruptures at 58,000 psi and the soldered bond remained intact. Figure 2 shows two specimens of 0.030 by 1.0-inch AISI 304 SS and 0.030 by 1.0-inch 1100 aluminum flat stock lap-joined by this technique. The rupture of these specimens when tested in tension occurred in the aluminum at 17,300 psi with no apparent damage to the bond. The area of the lap joint is one square inch. Figure 3 shows a photomacrograph of a bond between aluminum and stainless steel. Figure 4 gives recommended specifications for a tube-to-tube bond. Figure 5 is a radiograph of a stainless steel fitting screwed into an aluminum-clad fuel element and sealed with aluminum solder. Figure 6 shows a typical bond between a stainless steel thermocouple and an aluminum tube.

ACKNOWLEDGEMENTS

Gratitude is expressed to P. F. Ashbrook and the Technical Publications staff for their help in the preparation of this report.

TABLE I

BOND STRENGTH OF SOLDERED ALUMINUM TO STAINLESS STEEL JOINTS

Number	Material	Specimen Size (inches)	Area of Soldered Joint (sq in.)	Breaking Strength (pounds)	Breaking Strength (psi)	Location of Failure	Shear Stress in Lap Joint (psi)
1	304 SS to 6061 Al	0.555 dia. x 0.035 wall	0.785	3120	47,300	Al tube	3980
2	304 SS to 6061 Al	0.555 dia. x 0.035 wall	0.785	3100	47,000	Al tube	3950
3	304 SS to 6061 Al	0.555 dia. x 0.035 wall	0.785	3050	46,200	Al tube	3950
4	304 SS to 6061 Al	0.555 dia. x 0.035 wall	0.785	3120	47,000	Al tube	3890
5	304 SS to 6061 Al	0.555 dia. x 0.035 wall	0.785	2980	45,200	Al tube	3760
6	304 SS to 6061 Al	0.555 dia. x 0.035 wall	0.785	2990	45,300	Al tube	3810
7	304 SS to 1100 Al	0.030 x 1.0 flat stock	1	520	17,300	Al sheet	520
8	304 SS to 1100 Al	0.030 x 1.0 flat stock	1	525	17,500	Al sheet	525

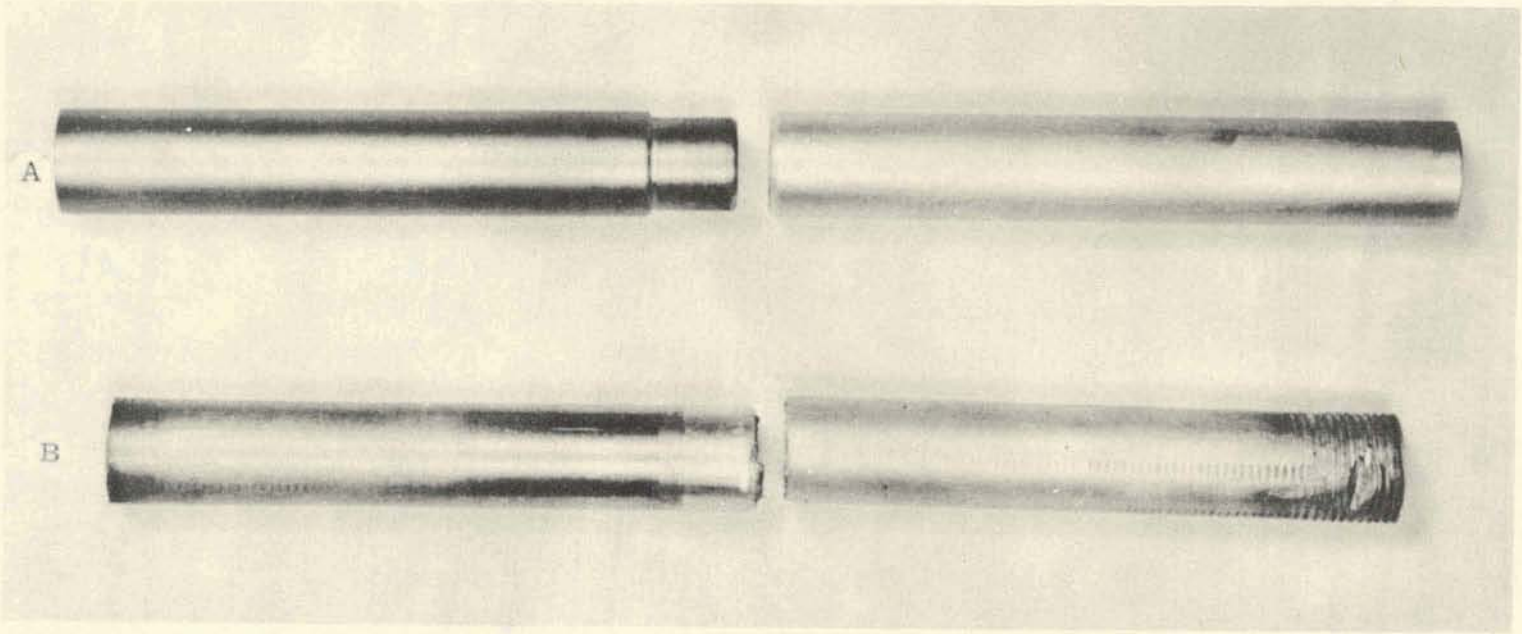

FIGURE 1

Prepared Specimen (A) and Ruptured Specimen (B) at 58,000 psi

AEC-GE RICHLAND, WASH.

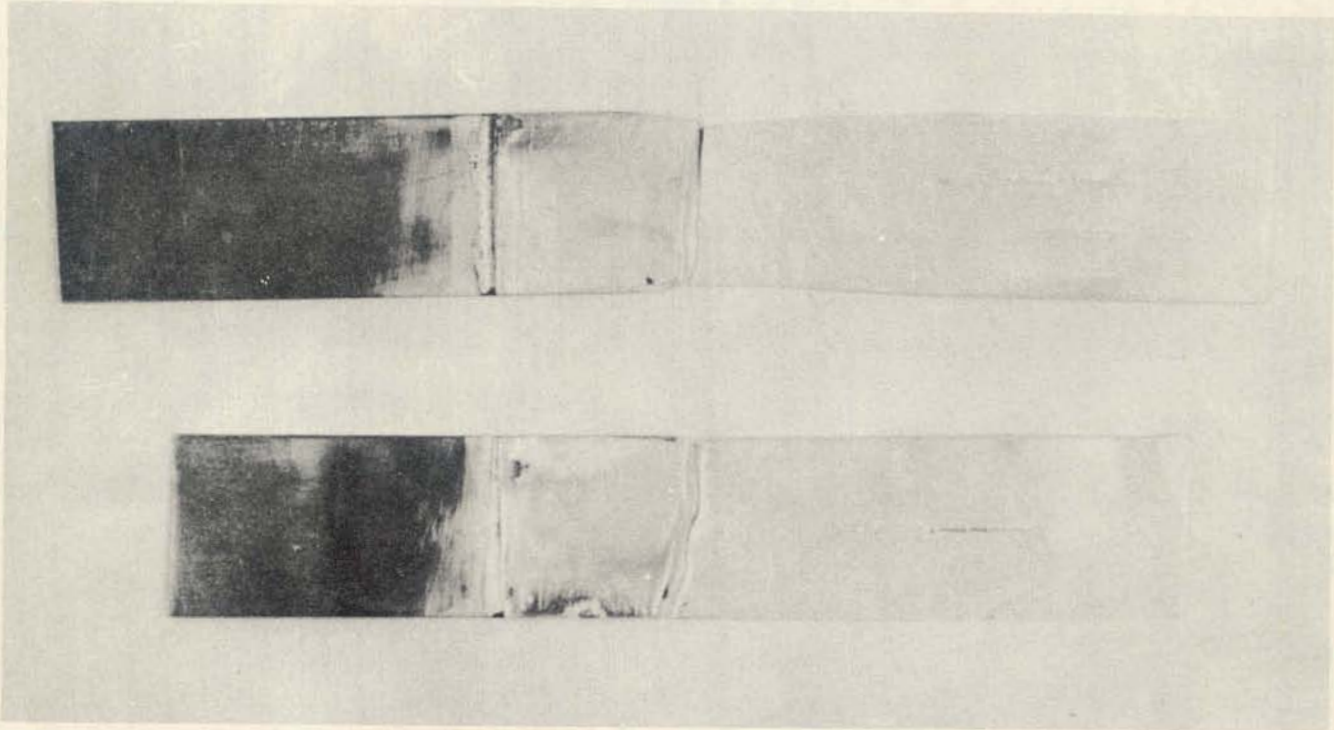

FIGURE 2

304 Stainless Steel Joined to 1100 Aluminum
(aluminum failed at 17, 300 psi)

AEC-GE RICHLAND, WASH.

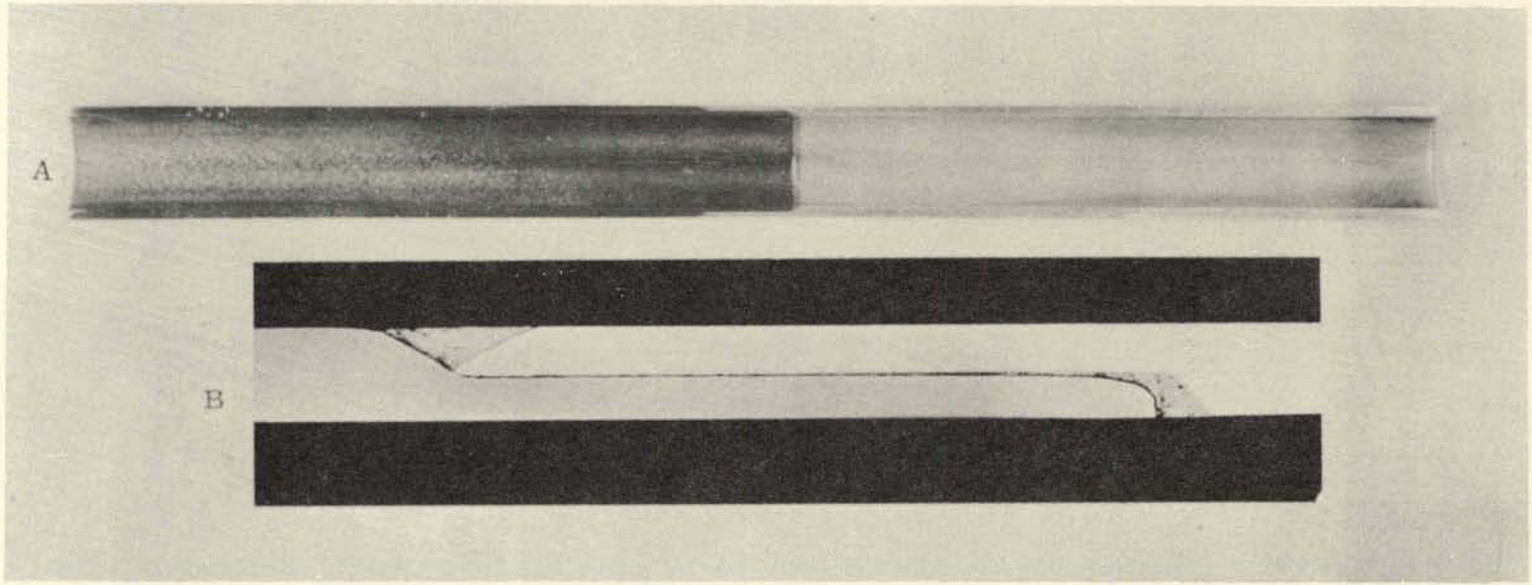

FIGURE 3

Cross Section of Soldered Joint (A) and a Photomicrograph of the Bond (B)

AEC-GE RICHLAND, WASH.

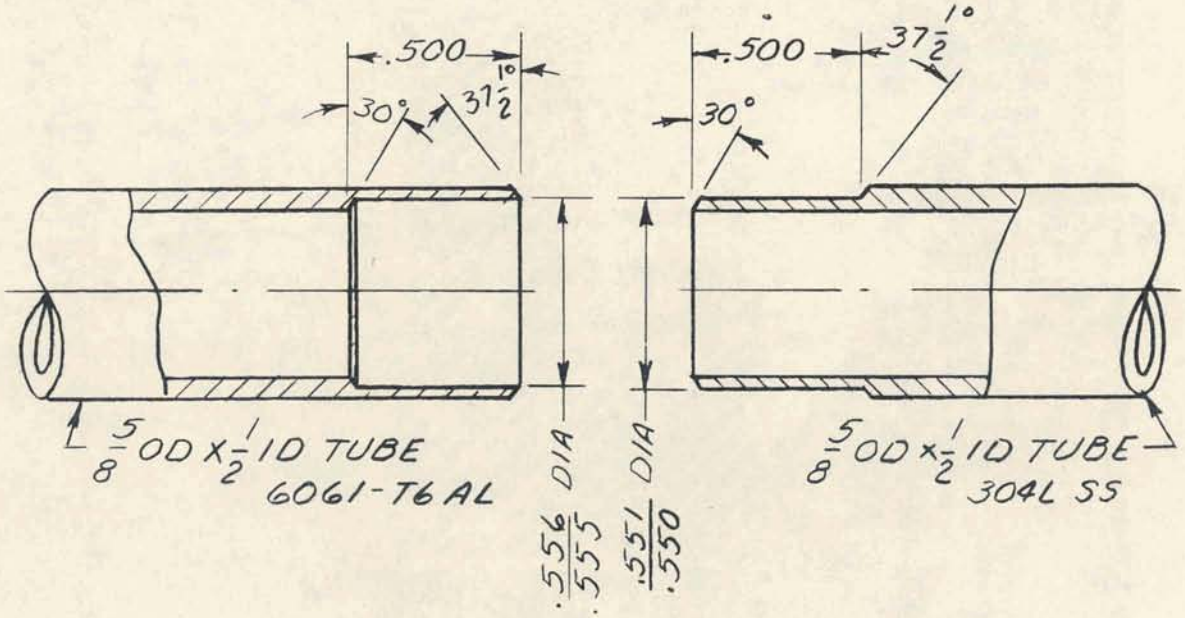

FIGURE 4

Recommended Specifications for Tube-to-Tube Bond

AEC-GE RICHLAND, WASH.

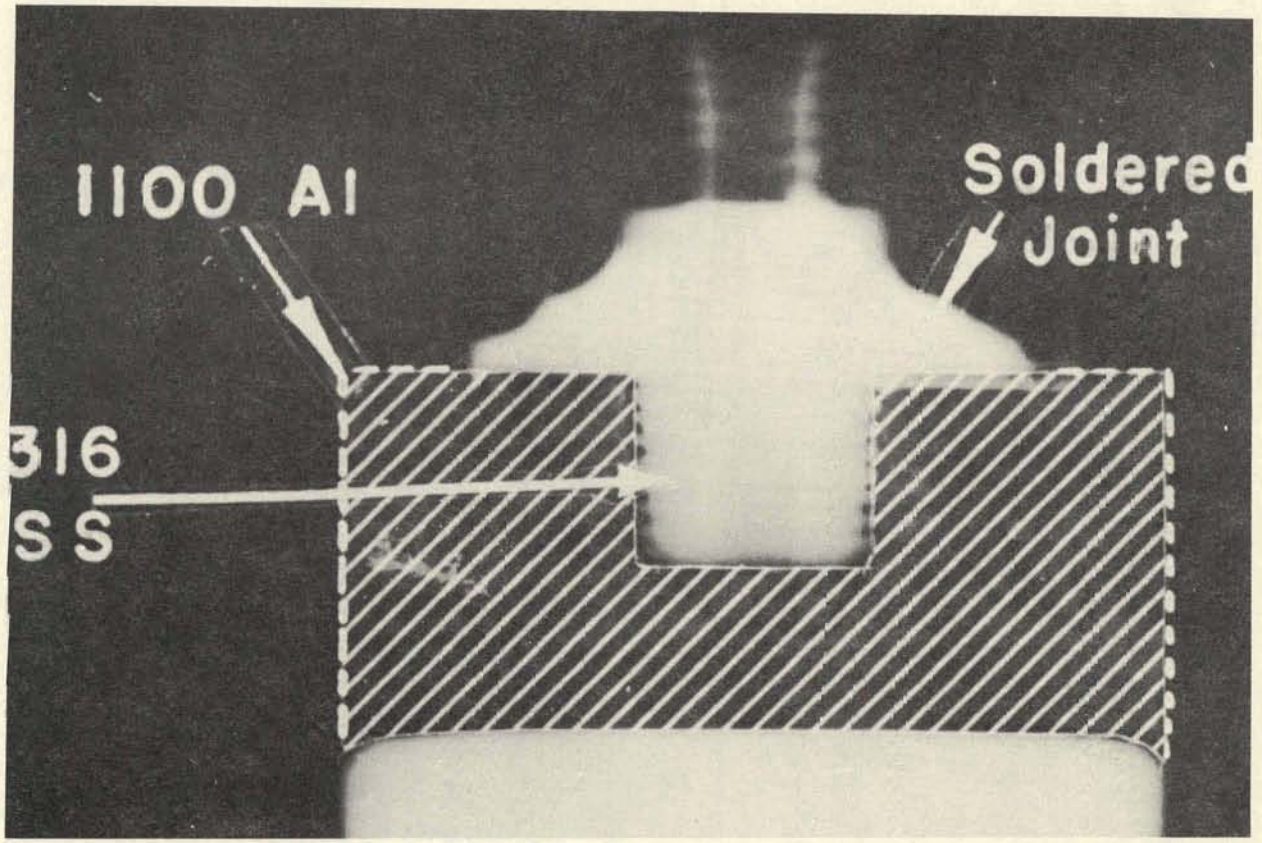

FIGURE 5

Bond Between Stainless Steel Fitting and Aluminum-Clad Fuel Element

AEC-GE RICHLAND, WASH.

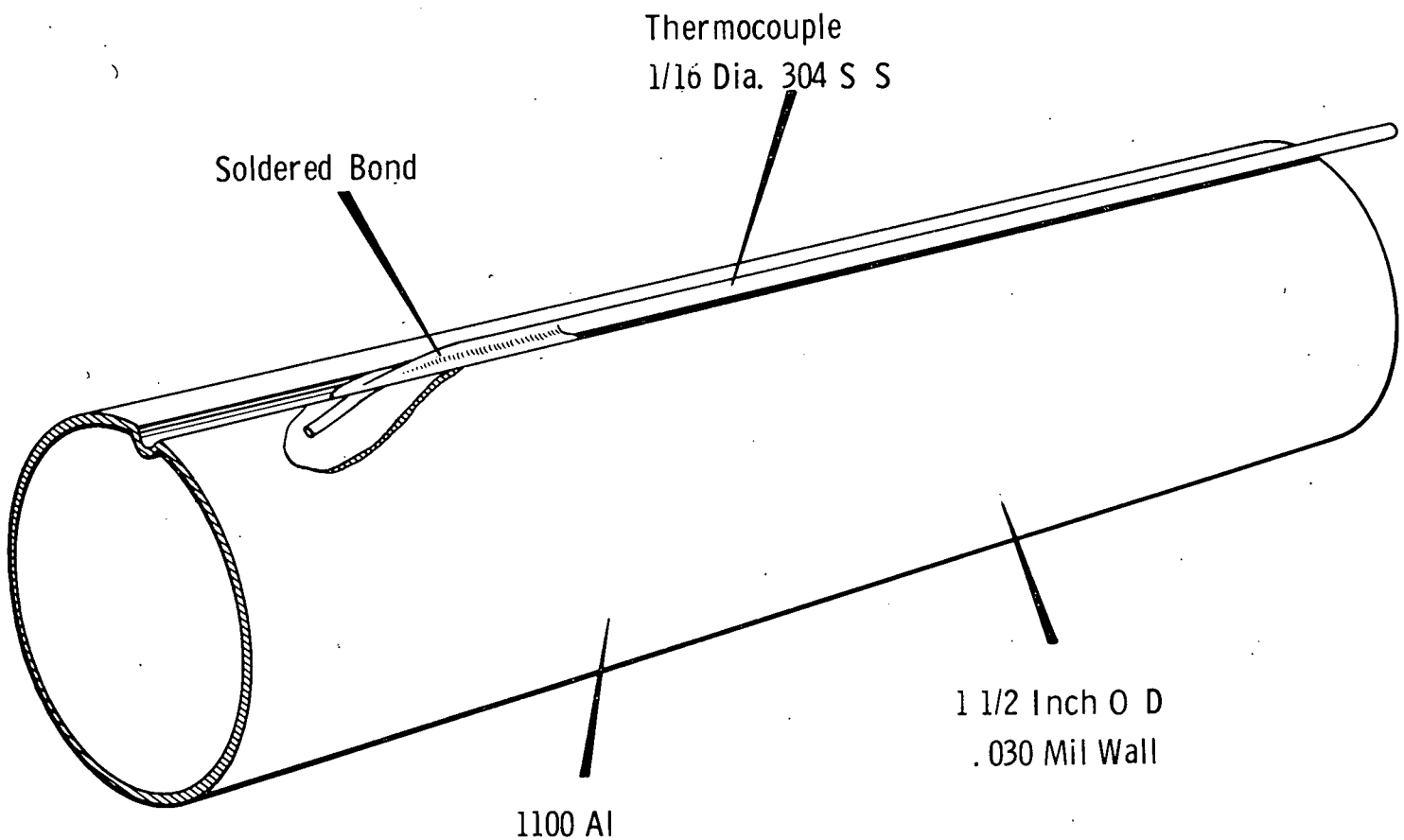

FIGURE 6

Soldered Bond Between Stainless Steel Thermocouple and 1100 Aluminum Tube

AEC-GE RICHLAND, WASH.