MASTER

DLCS-2110140

JUL 27 1961

DUQUESNE LIGHT COMPANY

SHIPPINGPORT ATOMIC POWER STATION

TEST EVALUATION

DLCS 2110140
T-641102

PERIODIC PRIMARY PLANT LEAK RATE TEST

CORE I SERIES 2

LEGAL NOTICE

This report was prepared as an account of Government sponsored work. Neither the United States, nor the Commission, nor any person acting on behalf of the Commission:

A. Makes any warranty or representation, expressed or implied, with respect to the accuracy, completeness, or usefulness of the information contained in this report, or that the use of any information, apparatus, method, or process disclosed in this report may not infringe privately owned rights; or

B. Assumes any liabilities with respect to the use of, or for damages resulting from the use of any information, apparatus, method, or process disclosed in this report.

As used in the above, "person acting on behalf of the Commission" includes any employee or contractor of the Commission, or employee of such contractor, to the extent that such employee or contractor of the Commission, or employee of such contractor prepares, disseminates, or provides access to, any information pursuant to his employment or contract with the Commission, or his employment with such contractor.

Section 1 of 1 Sections

First Issue, June 14, 1961

390 01

DISCLAIMER

This report was prepared as an account of work sponsored by an agency of the United States Government. Neither the United States Government nor any agency Thereof, nor any of their employees, makes any warranty, express or implied, or assumes any legal liability or responsibility for the accuracy, completeness, or usefulness of any information, apparatus, product, or process disclosed, or represents that its use would not infringe privately owned rights. Reference herein to any specific commercial product, process, or service by trade name, trademark, manufacturer, or otherwise does not necessarily constitute or imply its endorsement, recommendation, or favoring by the United States Government or any agency thereof. The views and opinions of authors expressed herein do not necessarily state or reflect those of the United States Government or any agency thereof.

DISCLAIMER

Portions of this document may be illegible in electronic image products. Images are produced from the best available original document.

TEST EVALUATION

DLCS 21101-0
T-641102

PERIODIC PRIMARY PLANT LEAK RATE TEST

CORE I SEED 2

Purpose

This test was performed to determine the magnitude and source of primary coolant water leakage from the Reactor Coolant System.

Conclusions and Recommendations

This test determined that pressurizer relief valves 06-H15-1 and 10 accounted for 80% of the combined leakage of 56 gal/hr from 6 pressure relief and reactor relief valves. This total leakage is about 24% less than the average leakage for the three prior performances. Temperature measurements at the 4 loop relief valves, the 2 purification loop relief valves and the pressurizer pilot relief valve indicate that these have no significant leakage.

Total leakage of primary coolant water calculated for this test was 26 gal/hr of which 13.2% could not be accounted for by the data. A large percentage of this inaccuracy may be caused by the Pottermeter Digital Totalizer used to determine the charging pump makeup to the Reactor Coolant System. The 26 gal/hr leakage for this test is greater than determined in prior performances.

Action has been initiated to calibrate the Pottermeter Totalizer prior to the next performance of this test.

Description of Test Equipment and Test Procedure

This test was conducted in accordance with approved procedure DLCS 21101, Periodic Reactor Plant Leak Rate Test, Fifth Issue, dated October 20, 1960. Testing was done with the plant operating at 65 gross MW using the 1B, 1C and 1D loops with 1A loop isolated.

On January 11, 1961, the leakage rates of individual pressurizer relief valves 06-H15-1 and 10 and reactor relief valves 06-H15-2, 3, 8 and 9 were determined using the permanently installed collection vessel and associated equipment. Water in the line between each relief valve and its motor operated valve was drained into the blow-off tank by cycling the valves. A reference level [illegible] the collection vessel [illegible] obtained by collecting water from the line of [illegible] to be test[illegible] and using nitrogen pressure [illegible] propelling [illegible] to the blow-off tank. Temperatures were also taken a[illegible] surfaces [illegible] valve and on the downstream piping using a surface pyr[illegible] The [illegible] valves were cycled to individually test each relief [illegible] collection vessel.

390 02

TEST EVALUATION DLCS 2110140
T-641102
PERIODIC PRIMARY PLANT LEAK RATE TEST

The total leak rate of the reactor plant was determined on January 12, 1961, by closing all telltale lines to the collection vessel and observing the change in level of the blow-off and flash tanks. A drop in the pressurizer level required that water be added to the primary system by the charging pumps. Sample trains were isolated during the test. Temperatures of the reactor loop relief valves and purification loop relief valves were checked for steam leakage periodically during the test.

Test Results

DLCS 2110140, Periodic Reactor Plant Leak Rate Test was performed on January 11 and 12, 1961. Figure 1 shows the piping arrangement used for this test. Table I lists the leak rates calculated for the pressurizer and reactor relief valves. Table II itemizes the leakage data determined for the reactor coolant system. Tables III - VII contain the original data recorded during the test. The leak rates of Table I were calculated in both gal/hr and lb/hr and both methods are shown in the sample calculations. Leak rates in lbs/hr were determined assuming saturated liquid conditions and correcting for specific volume changes related to the saturation pressures of the collection vessel as recorded in Table III.

Test results of Table I show that the two pressurizer relief valves had considerably more leakage than any of the reactor relief valves and their combined leakage was 80% of the total valve leakage. Only 06-H15-2 of the reactor relief valves showed significant leakage. Comparison of these data with the three previous performances show that leakage rates of both pressurizer relief valves increased slightly. Reactor relief valve 06-H15-8 leakage decreased some 13 gal/hr while the other reactor relief valves showed some increase in leakage. However, the total valve leakage of 56 gal/hr observed for this performance is 24% less than the average leakage for the three prior performances.

Table IIIwith the original data shows that the excessive leakage for pressure valves 06-H15-1 and 06-H15-10 was indicated by the higher temperatures at the valve nipples and the higher collection vessel pressures. With the method of leakage detection used in this test (see Figure 1) a sufficient quantity of steam passing a relief valve will be quickly detected by the collection vessel pressure. Data of this test and DLCS 2110137, 38 and 39 show that collection vessel pressures of 100-200 psig indicate relief valve leakage of 14-15 gal/hr and pressures of 300-600 psig indicate 18-28 gal/hr leakage.

The total plant leakage, Table II, for this test was 25.2 gal/hr with 22.2 gal/hr leakage accounted for. Thus, leakage unaccounted for is 12% of the total. The Sample Calculations show that the blow-off tank is the only factor in the "accounted for" leakage and the measurement inaccuracy would be a maximum of ± 3%. Factors making up the total leakage must then account for the remaining 9% inaccuracy. Pressurizer narrow range level innacuracy is 1% maximum

and the error in calculating the water volume correction would be less than 1%. Attention is thus directed to the Pottermeter, a digital totalizer which determines the quantity of water delivered by the charging pump, as a source of significant error. Investigation has shown that this instrument has not been checked periodically for calibration and, therefore, may be giving erroneous readings. The 25.2 gal/hr total leakage for this test is greater than determined in prior performances.

Table IV shows the temperatures at those relief valves which are not connected to the collection vessel. These results indicate that there is no significant leakage through these valves.

DUQUESNE LIGHT COMPANY
POWER STATIONS DEPARTMENT
SHIPPINGPORT ATOMIC POWER STATION

PERIODIC REACTOR PLANT LEAK RATE TEST
DLCS 21101
T-641102

Figure 1

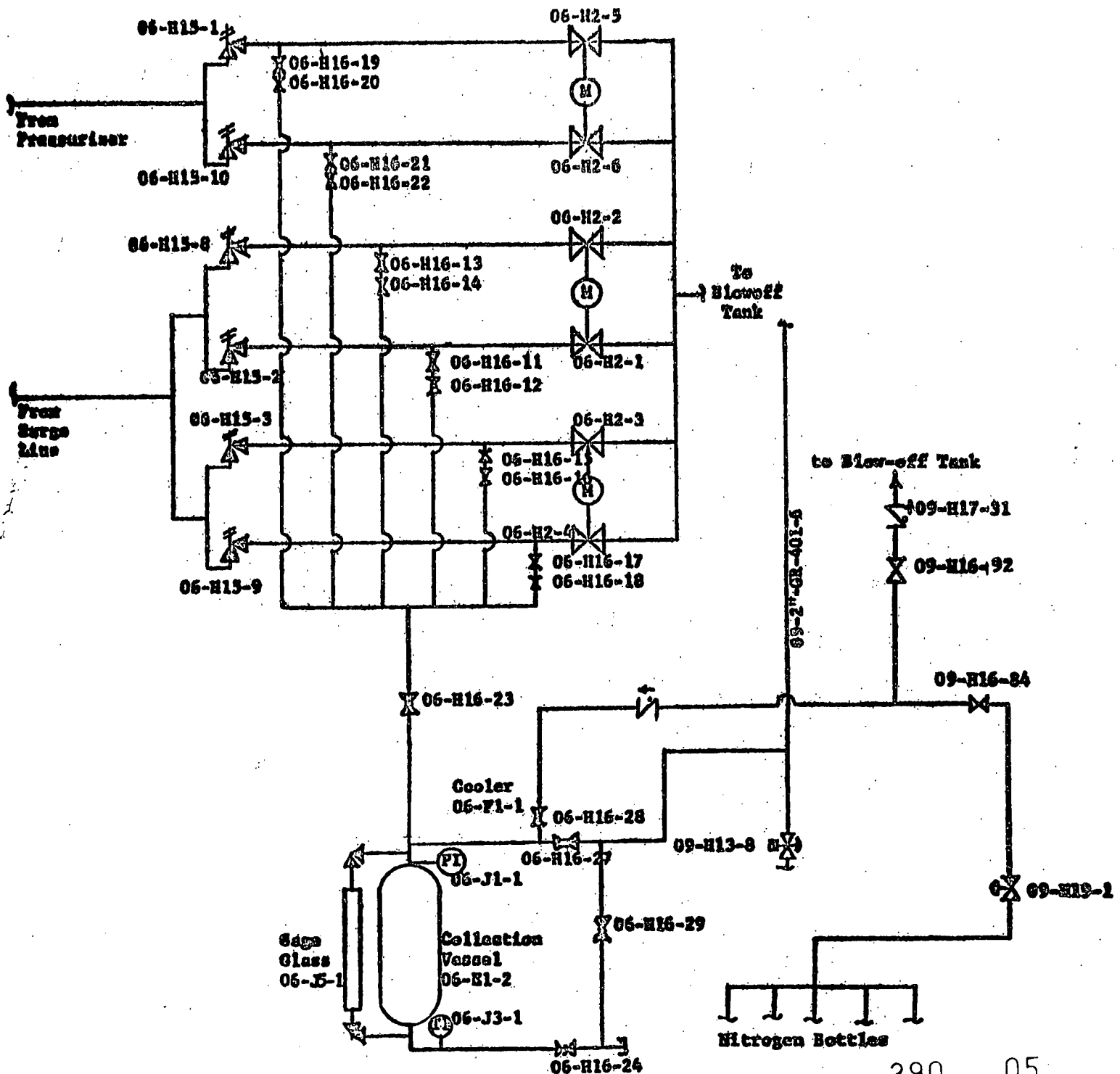

TABLE I

SUMMARY OF RELIEF VALVE LEAKAGE RATES

January 11, 1961

Date	Relief Valve Number	Increase in Sight Glass Level (inches)	Δ Time (min)	Leak Rate Gal/Hr.	Leak Rate Lb/Hr.
1/11/61	06-H15-1	25 1/2	13	29.0	194.0
1/11/61	06-H15-10	32 1/4	30	15.9	115.8
1/11/61	06-H15-8	1 1/2	15	1.5	11.6
1/11/61	06-H15-2	17	30	8.4	65.1
1/11/61	06-H15-3	2	30	1.0	7.7
1/11/61	06-H15-9	1/2	30	0.3	1.9
	Total valve leakage			56.1	396.1

390 06

TABLE II

SUMMARY OF REACTOR COOLANT SYSTEM LEAKAGE DATA

January 12, 1961

	Gal/Hr	Lb/Hr
Makeup to reactor coolant system	19.0	158.0
Decrease in pressurizer level	6.4	53.5
Increase in blow-off tank level	22.0	185.0
Change in flash tank level	0.0	0.0
Decrease in volume due to Tavg. change	0.2	1.7
Sample train leakage	0.0	0.0
Total plant leakage	25.2	210.0
Leakage accounted for	22.2	185.0
Leakage unaccounted for	3.0	25.0

TABLE III

ORIGINAL DATA - RELIEF VALVE LEAKAGE

January 11, 1961

Valve Name and Number	Valve Transfer Control Switch Position - MCC-RS (A or B)	Time (Minutes)	Collection Vessel Level (inches)	Collection Vessel Temp. (F)	Collection Vessel Press. (psig)
Pressurizer Relief		0926	*	---	---
Valve 06-H15-1	B	0939	25 1/2	---	570
Pressurizer Relief		1009	*	---	---
Valve 06-H15-10	A	1039	32 1/4	320	190
Reactor Relief		1116	*	---	---
Valve 06-H15-8	A	1131	1 1/2	220	20
Reactor Relief		1325	*	---	---
Valve 06-H15-2	B	1355	17	120	20
Reactor Relief		1405	*	---	---
Valve 06-H15-3	B	1435	2	120	20
Reactor Relief		1445	*	---	---
Valve 06-H15-9	A	1515	1/2	120	20

Valve Name and Number	Time	VALVE INLET NIPPLE (F)	VALVE OUTLET NIPPLE (F)	DISTANCE DOWNSTREAM 1 ft. (F)	DISTANCE DOWNSTREAM 2 ft. (F)
Pressurizer Relief 06-H15-1	0930	550	520	550	550
Pressurizer Relief 06-H15-10	1020	500	320	310	310
Reactor Relief 06-H15-2	1350	310	230	150	130
Reactor Relief 06-H15-8	1131	290	230	180	180
Reactor Relief 06-H15-3	1430	310	250	150	130
Reactor Relief 06-H15-9	1515	295	220	165	135
Relief Valve Discharge Pipe Temp. (MIP-RS) 06-H15-1	0940	495	---	---	---
06-H15-10	1020	260	---	---	---

* Sight glass reference level.

TABLE IV

ORIGINAL DATA - REACTOR PLANT RELIEF VALVE TEMPERATURES

January 12, 1961

Valve Name and Number	Time	Valve Initial Nipple (F)	Valve Outlet Nipple (F)	Distance Downstream 1 Ft. (F)	Distance Downstream 2 Ft. (F)
Initial Readings					
1A Loop Relief (06-H15-4)	0928	95	95	96	96
1B Loop Relief (06-H15-5)	0945	117	109	106	105
1C Loop Relief (06-H15-6)	0929	130	106	102	102
1D Loop Relief (06-H15-7)	0943	102	100	100	100
1AC Purif. Loop Rel. (07-H15-1)	0927	107	98	95	96
1BD Purif. Loop Rel. (07-H15-2)	0944	117	107	105	105
Pressurizer Pilot Relief (06-H18-1)	0920	120	120	112	112
1 Hour Readings					
1A Loop Relief (06-H15-4)	1027	95	94	95	95
1B Loop Relief (06-H15-5)	1042	118	108	106	105
1C Loop Relief (06-H15-6)	1025	129	102	100	99
1D Loop Relief (06-H15-7)	1040	105	101	101	102
1AC Purif. Loop Rel. (07-H15-1)	1026	108	98	96	96
1BD Purif. Loop Rel. (07-H15-2)	1041	118	108	106	105
Pressurizer Pilot Relief (06-H18-1)	1017	122	121	112	112

TABLE IV (cont'd)

ORIGINAL DATA - REACTOR PLANT RELIEF VALVE TEMPERATURES

January 12, 1961

Valve Name and Number	Time	Valve Initial Nipple (F)	Valve Outlet Nipple (F)	Distance Downstream 1 Ft. (F)	Distance Downstream 2 Ft. (F)
2 Hour Readings					
1A Loop Relief (06-H15-4)	1128	96	96	96	97
1B Loop Relief (06-H15-5)	1133	116	108	106	105
1C Loop Relief (06-H15-6)	1129	128	107	100	100
1D Loop Relief (06-H15-7)	1132	103	100	100	100
1AC Purif. Loop Rel. (07-H15-1)	1127	109	108	98	97
1BD Purif. Loop Rel. (07-H15-2)	1134	117	105	105	105
Pressurizer Pilot Relief (06-H18-1)	1115	122	120	112	112
8 Hour Readings					
1A Loop Relief (06-H15-4)	1757	97	97	96	96
1B Loop Relief (06-H15-5)	1814	118	109	106	106
1C Loop Relief (06-H15-6)	1801	133	108	102	102
1D Loop Relief (06-H15-7)	1810	102	100	100	99
1AC Purif. Loop Rel. (07-H15-1)	1755	110	98	96	96
1BD Purif. Loop Rel. (07-H15-2)	1812	115	106	106	106
Pressurizer Pilot Relief (06-H18-1)	1747	121	120	113	110

TABLE V

ORIGINAL DATA

FLASH TANK AND BLOW OFF TANK SIGHT GLASS LEVELS

January 12, 1960

Time	0915	0945	1015	1115	1745
Flash Tank Level in. (Aux. Container Sight Glass)	40 7/16	40 7/16	40 7/16	40 7/16	40 7/16
Blow-off Tank Level in. (Aux. Container Sight Glass)	56 3/16	56 3/8	56 11/16	56 7/8	58 7/16

TABLE VI

ORIGINAL DATA

DRAIN VALVE AND RELIEF VALVE LEAKAGE DATA

Date	January 12, 1961			
Time	0945	1045	1145	1745
Pressurizer Relief Valve Transfer Control Switch Position (MCC-RS) "A or B"	B	B	B	B
No. 1 Reactor Relief Valve Transfer Control Switch Position (MCC-RS) "A or B"	B	B	B	B
No. 2 Reactor Relief Valve Transfer Control Switch Position (MCC-RS) "A or B"	B	B	B	B
Tavg. (MCC-RS) F	499.9	499.9	499.8	499.8
Temp. Error (P and T Recorder - AIP) F	OOS	OOS	OOS	OOS
Pressurizer Temp. (MCC-RS) F	624.0	623.8	623.9	624.0
Blow-Off Tank Temp. (Temp. Ind. Pt. No. 5 - MIP-RS) F	123.0	122.0	122.5	130.0
Flash Tank Temp. (MCC-RS) F	<100	<100	<100	<100
Pressurizer Level (Narrow Range - AIP) in	92.0	88.0	84.0	83.8
VOS Flash Level (MIP-RS) in	280.0	280.0	280.0	280.0
Pressurizer Level (MCC-RS) in	91.0	87.0	82.5	78.5
Time	0955	1055	1155	1755
Charging Pump Integrator * (1A Aux. Equip. Room)	492940	492940	492940	495024

* 100 counts = 1 cubic foot with the x1 setting (Supplier's data)

TABLE VII

ISOLATION VALVE POSITION AND FLASH TANK SPRAY DATA

January 12, 1961

VII-D Isolated Loop Data

1. 1A Loop isolated and in a wet layup condition.

2. 1A Loop pressure (MCC-RS) 0 psig

3. 1A Loop temperature (Tc) (Mueller Bridge) 29.16 Ω or 107.4 F.

E. Valve Positions

1. 1A hydraulic and motor operated stop valves closed, 1B, 1C and 1D hydraulic and motor operated stop valves open.

2. 1A Loop by-pass open, 1B, 1C and 1D by-pass closed, 1A, 1B, 1C and 1D loop drain valves closed.

3. All coolant discharge and vent system manually operated. Drain valves in their normal position.

4. Pressurizer and reactor relief valves transfer control switches were left in the "3" position. (Valves 06-RH5-8, 9 and 10 open to blow-off tank.)

F Flash Tank Spray Data

1. No spray necessary after initiation of the test.

LOG OF EVENTS

Date	Time	Event
1/11/61	0925-1515	Determined the leak rates of pressurizer relief valves 06-H15-1 and 10 and reactor relief valves 06-H15-2, 3, 8 and 9.
1/12/61	0932	Sample trains shut down.
1/12/61	0945	Established a "visible" flash tank level and took initial data readings.
1/12/61	1320:00	Started charging the primary system. Charging pump integrator readings 492940.
1/12/61	1328:10	Completed charging the primary system. Charging pump integrator reading 495024.
1/12/61	1815	Testing ended.

SAMPLE CALCULATIONS FOR TABLE I

1. Method used to obtain the leak rate in gal/hr.

$$\frac{\text{Sight glass level increase (in.)}}{\text{Elapsed time needed for the run (min.)}} \times \frac{60 \text{ min.}}{1 \text{ hr.}} \times .246 \frac{\text{gal*}}{\text{in}} = \text{gal/hr.}$$

* Volume constant for the collection vessel.

2. Method used to obtain the leak rate in lb/hr.

$$\frac{\text{Sight glass level increased (in.)}}{\text{Elapsed time for run (min.)}} \times \frac{60 \text{ min.}}{1 \text{ hr.}} \times .246 \frac{\text{gal.}}{\text{in.}} \times .134 \frac{\text{Ft}^3}{\text{gal.}} \times \rho tv \frac{\text{lb.}}{\text{Ft}^3}$$

$$= \frac{\text{lb.}}{\text{hr.}}$$

Where ρtv = Density of the saturated liquid at the saturation pressure in the collection vessel.

SAMPLE CALCULATIONS FOR TABLE II

1. Make-up to Reactor Coolant System by charging pump.

From Table VI,

1745	-	495024
0945	-	492940
8 hours		2084 Integrator counts

$$\frac{20.84\ ft^3}{8\ hours} \times 60.59\ lbs/ft^3 = 158\ lbs/hr.$$

2. Change in Pressurizer level.

From Table VI, the narrow range level readings were used because of the greater accuracy.

0945	-	92.0 inches
1745	-	83.8 inches
8 hours		8.2 inches decrease

$$\frac{8.2\ in.}{8\ hours} \times 1.3\ ft^3/in. \times 40.13\ lb/ft^3 = 53.5\ lb/hr.$$

3. Change in Blow-off Tank Level

From Table V,

1745	-	58 7/16 inches
0945	-	56 3/8 inches
8 hours		2 1/16 inches increase

$$\frac{2\ 1/16\ inches}{8\ hours} \times 11.6\ ft^3/in. \times 61.65\ lb/ft^3 = 185\ lb/hr.$$

4. Change in Flash Tank Level.

No change.

5. Change in Water Volume due to Tavg. change

From Table VI,

0945	-	499.9 F
1745	-	499.8 F
8 hours		0.1 F decrease

Since 3 loops were in operation, K_3 = 135.6 lb/f.

$$\frac{0.1\ F}{8\ hours} \times 135.6\ lb/F = 1.7\ lb/hr.\ decrease$$

SAMPLE CALCULATIONS FOR TABLE II (cont'd)

6. Sample train leakage.

None

Total leakage = 158 + 53.5 - 1.7 - 209.8 lb/hr. x 0.12* gal/lb = 25.2 gal/hr.

Leakage accounted for = 185 lb/hr x 0.12 gal/lb = 22.2 gal/hr.

Leakage unaccounted for = 209.8 - 185 lb/hr = 24.8 lb/hr x 0.12 gal/hr = 3 gal/hr.

* 0.12 gal/lb conversion based on 68 F and 14.7 psia.

TEST EVALUATION DLCS 2110140
T-641102
PERIODIC PRIMARY PLANT LEAK RATE TEST

Results Prepared By R. W. Martin

Results Reviewed By R W Noble

Approved (Duquesne Light Co) George A Santel Date 6-14-61

390 18