FEB 24 1997 20 Sta. 37

ENGINEERING DATA TRANSMITTAL

1. EDT 619550

2. To: (Receiving Organization)	3. From: (Originating Organization)	4. Related EDT No.:
Packaging Engineering	Packaging Engineering	NA
5. Proj./Prog./Dept./Div.:	6. Design Authority/ Design Agent/Cog. Engr.:	7. Purchase Order No.:
03E00	J. H. O'Brien	NA
8. Originator Remarks: For approval. This document replaces WHC-SD-MP-SARP-001, *Safety Analysis Report for Packaging (Onsite) Doorstop Sample Carrier System.*		9. Equip./Component No.: NA
		10. System/Bldg./Facility: NA
11. Receiver Remarks: 11A. Design Baseline Document? [ ] Yes [X] No		12. Major Assm. Dwg. No.: NA
		13. Permit/Permit Application No.: NA
		14. Required Response Date:

15. DATA TRANSMITTED

(A) Item No.	(B) Document/Drawing No.	(C) Sheet No.	(D) Rev. No.	(E) Title or Description of Data Transmitted	(F) Approval Desig-nator	(G) Reason for Trans-mittal	(H) Origi-nator Dispo-sition	(I) Receiv-er Dispo-sition
1	HNF-SD-TP-SARP-023		0	Safety Analysis Report for Packaging (Onsite) Doorstop Sample Carrier System	SQ	1	1	

16. KEY

Approval Designator (F)	Reason for Transmittal (G)	Disposition (H) & (I)
E, S, Q, D or N/A (see WHC-CM-3-5, Sec.12.7)	1. Approval 4. Review 2. Release 5. Post-Review 3. Information 6. Dist. (Receipt Acknow. Required)	1. Approved 4. Reviewed no/comment 2. Approved w/comment 5. Reviewed w/comment 3. Disapproved w/comment 6. Receipt acknowledged

17. SIGNATURE/DISTRIBUTION
(See Approval Designator for required signatures)

(G) Reason	(H) Disp.	(J) Name (K) Signature (L) Date (M) MSIN	(G) Reason	(H) Disp.	(J) Name (K) Signature (L) Date (M) MSIN
		Design Authority	1	1	WA McCormick 2/20/97 G1-11
		Design Agent	1	1	JS Schofield 2/12/197 S7-12
1	1	Cog.Eng.: JH O'Brien 2/20/97 G1-11			
1	1	Cog. Mgr.: JG Field 2/20/97 G1-11			
1	1	QA: CR Hoover 2/20/97 G1-11			
1	1	Safety: DW McNall 2/21/97 G1-11			
		Env.			

18. J. H. O'Brien 2/20/97
Signature of EDT Originator — Date

19. John Schofield 2/21/97
Authorized Representative for Receiving Organization — Date

20. J. G. Field 2/20/97
Design Authority/ Cognizant Manager — Date

21. DOE APPROVAL (if required) Ctrl. No.
[ ] Approved
[ ] Approved w/comments
[ ] Disapproved w/comments

BD-7400-172-2 (05/96) GEF097

Safety Analysis Report for Packaging (Onsite) Doorstop Sample Carrier System

J. H. O'Brien
Rust Federal Services Inc. Northwest Operations, Richland, WA 99352
U.S. Department of Energy Contract DE-AC06-96RL13200

EDT/ECN: EDT 619550 UC: 513
Org Code: 03E00 Charge Code: E51537
B&R Code: EW3120074 Total Pages: 226

Key Words: Doorstop, N-55 overpack, DOT 208-L drum

Abstract: The Doorstop Sample Carrier System consists of a Type B certified N-55 overpack, U.S. Department of Transportation (DOT) specification or performance-oriented 208-L (55-gal) drum (DOT 208-L drum), and Doorstop containers. The purpose of the Doorstop Sample Carrier System is to transport samples onsite for characterization. This safety analysis report for packaging (SARP) provides the analyses and evaluation necessary to demonstrate that the Doorstop Sample Carrier System meets the requirements and acceptance criteria for both Hanford Site normal transport conditions and accident condition events for a Type B package. This SARP also establishes operational, acceptance, maintenance, and quality assurance (QA) guidelines to ensure that the method of transport for the Doorstop Sample Carrier System is performed safely in accordance with WHC-CM-2-14, *Hazardous Material Packaging and Shipping*.

TRADEMARK DISCLAIMER. Reference herein to any specific commercial product, process, or service by trade name, trademark, manufacturer, or otherwise, does not necessarily constitute or imply its endorsement, recommendation, or favoring by the United States Government or any agency thereof or its contractors or subcontractors.

Printed in the United States of America. To obtain copies of this document, contact: Document Control Services, P.O. Box 950, Mailstop H6-08, Richland WA 99352, Phone (509) 372-2420; Fax (509) 376-4989.

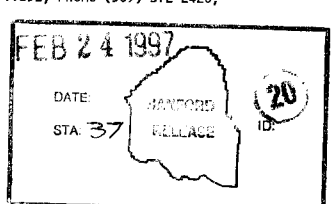

Release Approval — Date

Release Stamp

Approved for Public Release

LIST OF EFFECTIVE PAGES

Page	Revision	Comment
	0	EDT
	0	SD Cover
	0	LOEP
iii-xii	0	TOC
A1-1 - A1-4	0	
A2-1 - A2-6	0	
A3-1 - A3-4	0	
A4-1 - A4-6	0	
A5-1 - A5-4	0	
A6-1 - A6-6	0	
A7-1 - A7-7	0	
A8-1 - A8-2	0	
A9-1 - A9-2	0	
A10-1 - A10-12	0	
B1-1 - B1-4	0	
B2-1 - B2-4	0	
B3-1 - B3-2	0	
B4-1 - B4-10	0	
B5-1 - B5-16	0	
B6-1 - B6-2	0	
B7-1 - B7-46	0	
B8-1 - B8-48	0	
B9-1 - B9-18	0	
B10-1 - B10-12	0	

CONTENTS

PART A: PACKAGE DESCRIPTION AND OPERATIONS

1.0 INTRODUCTION A1-1
1.1 GENERAL INFORMATION A1-1
1.2 SYSTEM DESCRIPTION A1-1
1.3 REVIEW AND UPDATE CYCLES A1-3

2.0 PACKAGING SYSTEM A2-1
2.1 CONFIGURATION AND DIMENSIONS A2-1
2.2 MATERIALS OF CONSTRUCTION A2-4
2.3 MECHANICAL PROPERTIES OF MATERIAL A2-4
2.4 DESIGN AND FABRICATION METHODS A2-5
2.5 WEIGHTS AND CENTER OF GRAVITY A2-5
2.6 CONTAINMENT BOUNDARY A2-5
2.7 CAVITY SIZE A2-6
2.8 HEAT DISSIPATION A2-6
2.9 SHIELDING A2-6
2.10 LIFTING DEVICES A2-6
2.11 TIEDOWN DEVICES A2-6

3.0 PACKAGE CONTENTS A3-1
3.1 GENERAL DESCRIPTION A3-1
3.2 CONTENT RESTRICTIONS A3-3
3.2.1 Radioactive Materials A3-3
3.2.2 Nonradioactive Materials A3-3

4.0 TRANSPORT SYSTEM A4-1
4.1 TRANSPORTER A4-1
4.2 TIEDOWN SYSTEM A4-1
4.3 SPECIAL TRANSFER REQUIREMENTS A4-1
4.3.1 Routing and Access Control A4-1
4.3.2 Radiological Limitations A4-1
4.3.3 Time Restrictions A4-3
4.3.4 Speed Limitations A4-6
4.3.5 Environmental Conditions A4-6
4.3.6 Frequency of Use and Milage Limitations A4-6
4.3.7 Escort and Emergency Response A4-6
4.3.8 Exclusive Use A4-6

5.0 ACCEPTANCE OF PACKAGING FOR USAGE A5-1
5.1 NEW PACKAGE ACCEPTANCE TESTING A5-1
5.1.1 Acceptance Requirements A5-1
5.1.2 Inspection and Testing A5-1
5.1.3 Documentation A5-2
5.2 PACKAGING FOR REUSE A5-2
5.2.1 Acceptance Requirements A5-2
5.2.2 Inspection and Testing A5-3
5.2.3 Documentation A5-4

CONTENTS (cont)

6.0 OPERATING REQUIREMENTS A6-1
6.1 GENERAL REQUIREMENTS A6-1
6.2 LOADING PACKAGE A6-1
6.2.1 Lead Pak Cylinder A6-1
6.2.2 Bottled Samples in Can A6-1
6.2.3 Doorstop Sample Carrier A6-2
6.2.4 Doorstop Container A6-2
6.2.5 N-55 Overpack A6-3
6.2.6 Lifting A6-4
6.2.7 Installation of Package onto Transport Vehicle A6-4
6.3 RECEIPT OF PACKAGE A6-4
6.3.1 Off-Loading A6-4
6.4 EMPTY PACKAGE (PACKAGING) A6-5
6.5 EXCESSIVE DOSE RATE TRANSPORT A6-5

7.0 QUALITY ASSURANCE REQUIREMENTS A7-1
7.1 INTRODUCTION A7-1
7.2 GENERAL REQUIREMENTS A7-1
7.3 ORGANIZATION A7-3
7.4 QUALITY ASSURANCE ACTIVITIES A7-3
7.4.1 Design Control A7-3
7.4.2 Procurement and Fabrication Control A7-3
7.4.3 Control of Operation/Processes A7-4
7.4.4 Control of Inspection and Testing A7-4
7.4.5 Control of Operations and Maintenance A7-4
7.4.6 Test Control A7-5
7.4.7 Control of Measuring and Test Equipment A7-5
7.4.8 Control of Nonconforming Items A7-5
7.4.9 Corrective Action A7-5
7.4.10 Quality Assurance Records and Document Control A7-6
7.4.11 Audits A7-6
7.5 SARP CONTROL SYSTEM A7-6

8.0 MAINTENANCE A8-1
8.1 GENERAL REQUIREMENTS A8-1
8.2 MAINTENANCE A8-1
8.3 DOCUMENTATION A8-2

9.0 REFERENCES A9-1

10.0 APPENDICES A10-1
10.1 DRAWINGS A10-1

CONTENTS (cont)

PART B: PACKAGE EVALUATION

1.0 INTRODUCTION B1-1
1.1 SAFETY EVALUATION METHODOLOGY B1-1
1.2 EVALUATION SUMMARY AND CONCLUSIONS B1-1
1.2.1 Contents B1-1
1.2.2 Radiological Risk B1-1
1.2.3 Containment B1-2
1.2.4 Shielding B1-2
1.2.5 Criticality B1-2
1.2.6 Structural B1-2
1.2.7 Thermal B1-2
1.2.8 Gas Generation B1-3
1.2.9 Tiedown System B1-3
1.3 REFERENCES B1-3

2.0 CONTENTS EVALUATION B2-1
2.1 CHARACTERIZATION B2-1
2.2 RESTRICTIONS B2-3
2.3 SIZE AND WEIGHT B2-3
2.4 CONCLUSIONS B2-3
2.5 REFERENCES B2-3

3.0 RADIOLOGICAL RISK EVALUATION B3-1
3.1 INTRODUCTION B3-1

4.0 CONTAINMENT EVALUATION B4-1
4.1 INTRODUCTION B4-1
4.2 CONTAINMENT SOURCE SPECIFICATION B4-1
4.3 NORMAL TRANSFER CONDITIONS B4-1
4.3.1 Conditions To Be Evaluated B4-1
4.3.2 Containment Acceptance Criteria B4-1
4.3.3 Containment Model B4-2
4.3.4 Containment Calculations B4-2
4.4 ACCIDENT CONDITIONS B4-2
4.4.1 Conditions To Be Evaluated B4-2
4.4.2 Containment Acceptance Criteria B4-2
4.4.3 Containment Model B4-2
4.4.4 Containment Calculations B4-3
4.5 CONTAINMENT EVALUATIONS AND CONCLUSIONS B4-3
4.5.1 Environmental Conditions B4-3
4.6 REFERENCES B4-3
4.7 APPENDIX: CONTAINMENT ANALYSES B4-5

5.0 SHIELDING EVALUATION B5-1
5.1 INTRODUCTION B5-1
5.2 DIRECT RADIATION SOURCE SPECIFICATION B5-1
5.2.1 Gamma Source B5-1
5.2.2 Beta Source B5-3
5.2.3 Neutron Source B5-3

CONTENTS (cont)

5.3 SUMMARY OF SHIELDING PROPERTIES OF MATERIALS B5-4
5.4 NORMAL CONDITIONS OF TRANSPORT B5-4
5.4.1 Conditions To Be Evaluated B5-4
5.4.2 Acceptance Criteria B5-4
5.4.3 Shielding Model B5-4
5.4.4 Shielding Calculations B5-8
5.5 ACCIDENT CONDITIONS B5-8
5.5.1 Conditions To Be Evaluated B5-8
5.5.2 Acceptance Criteria B5-9
5.5.3 Shielding Model B5-9
5.6 SHIELDING EVALUATION AND CONCLUSIONS B5-9
5.7 REFERENCES B5-10
5.8 APPENDICES B5-11
5.8.1 Listing of ORIGEN2 Input File for 875 mL of Worst-Case Source Term B5-11
5.8.2 Listing of MCNP Input File B5-12

6.0 CRITICALITY EVALUATION B6-1
6.1 DISCUSSION AND RESULTS B6-1
6.2 REFERENCES B6-1

7.0 STRUCTURAL EVALUATION B7-1
7.1 INTRODUCTION B7-1
7.2 STRUCTURAL EVALUATION OF PACKAGE B7-1
7.2.1 Structural Design and Features B7-1
7.2.2 Mechanical Properties of Materials B7-1
7.2.3 Chemical and Galvanic Reactions B7-2
7.2.4 Size of Package and Cavity B7-2
7.2.5 Weights and Centers of Gravity B7-2
7.2.6 Tamper Indicating Feature B7-3
7.2.7 Positive Closure B7-3
7.2.8 Lifting and Tiedown Devices B7-3
7.2.9 Brittle Fracture B7-4
7.3 NORMAL TRANSFER CONDITIONS B7-4
7.3.1 Conditions to be Evaluated B7-4
7.3.2 Acceptance Criteria B7-4
7.3.3 Structural Model B7-5
7.3.4 Initial Conditions B7-5
7.3.5 Structural Evaluations and Conclusions B7-6
7.4 ACCIDENT CONDITIONS B7-6
7.4.1 Conditions to be Evaluated B7-6
7.4.2 Acceptance Criteria B7-7
7.4.3 Structural Model B7-7
7.4.4 Initial Conditions B7-7
7.4.5 Structural Evaluation and Conclusions B7-7
7.5 REFERENCES B7-8
7.6 APPENDICES B7-10
7.6.1 Design Calculations B7-10
7.6.2 Operating Instructions Change for N-55 Overpack Evaluation B7-45

CONTENTS (cont)

8.0 THERMAL EVALUATION B8-1
8.1 THERMAL SOURCE SPECIFICATION B8-1
8.2 SUMMARY OF THERMAL PROPERTIES B8-1
8.2.1 Doorstop Container B8-1
8.2.2 DOT 208-L Drum and Galvanized Steel Liner of Overpack B8-2
8.2.3 Polystyrene B8-2
8.2.4 Polyurethane B8-3
8.2.5 Fiberglass B8-3
8.2.6 Air B8-3
8.2.7 Waste Contents B8-4
8.3 THERMAL EVALUATION FOR NORMAL CONDITIONS B8-4
8.3.1 Acceptance Criteria B8-5
8.3.2 Thermal Model for Normal Conditions B8-5
8.3.3 Thermal Analysis Results for Normal Conditions B8-9
8.4 THERMAL EVALUATION FOR ACCIDENT CONDITIONS B8-11
8.4.1 Acceptance Criteria B8-11
8.4.2 Thermal Model for Accident Conditions B8-11
8.4.3 Thermal Analysis Results for Accident Condition . . B8-12
8.5 THERMAL EVALUATION CONCLUSION B8-19
8.6 REFERENCES B8-19
8.7 APPENDICES B8-21
8.7.1 Thermal Evaluation Model for Normal Condition . . . B8-21
8.7.2 Thermal Evaluation Model for Accident Condition . . B8-34

9.0 PRESSURE AND GAS GENERATION EVALUATION B9-1
9.1 GAS GENERATION B9-1
9.2 PACKAGE PRESSURE B9-1
9.3 APPENDICES B9-2
9.3.1 Hydrogen Gas Generation Calculations B9-2
9.3.2 Hydrogen Gas Generation in the Doorstop Container - Addendum B9-15

10.0 PACKAGE TIEDOWN SYSTEM EVALUATION B10-1
10.1 TIEDOWN EVALUATION B10-1
10.2 TIEDOWN DEVICES B10-2
10.2.1 Acceleration Directional Loadings B10-2
10.2.2 Tiedown Frame Eyebolt B10-6
10.2.3 Stops Welded to Tiedown Frame B10-6
10.2.4 Tiedown Cables B10-7
10.2.5 Tiedown Base B10-7
10.2.6 Frame Tiedown Attachments B10-7
10.2.7 Tiedown Base Frame B10-9
10.2.8 Bolts B10-10
10.3 ATTACHMENTS AND RATINGS B10-11
10.4 REFERENCES B10-11

LIST OF FIGURES

A2-1 Doorstop Sample Carrier System Contents A2-2

A2-2 Doorstop Sample Carrier System A2-3

A4-1 Tiedown Configuration A4-2

B5-1 Arrangement of the Doorstop Containers in the N-55 . . . . . B5-6

B5-2 Simplified Sketch of Doorstop Sample Carrier System Transport Vehicle B5-6

B8-1 General View of Thermal Evaluation Finite Element Model B8-5

B8-2 Finite Element Model with Node Numbers (Right Side) B8-6

B8-3 Right Side Zoom of Nodes B8-6

B8-4 Temperature Distribution of Normal Condition Case 1 . . . . . B8-10

B8-5 Temperature Distribution for Normal Condition Case 2 . . . . . B8-10

B8-6 Temperature Distribution for Normal Condition Case 3 . . . . . B8-11

B8-7 Temperature Distribution for Accident Condition, Initial Steady State B8-13

B8-8 Temperature Distribution for Accident Condition, Heat up to 800 °C (1475 °F) B8-13

B8-9 Temperature Distribution for Accident Condition, 10 minutes at 800 °C (1475 °F) B8-14

B8-10 Temperature Distribution Accident Condition, 20 minutes at 800 °C (1475 °F) B8-14

B8-11 Temperature Distribution for Accident Condition, 30 minutes at 800 °C (1475 °F) B8-15

B8-12 Temperature Distribution for Accident Conditions, Cool Down to 46 °C (115 °F) B8-15

B8-13 Temperature Distribution for Accident Condition, 30 minutes at 46 °C (115 °F) after Fire Event B8-16

B8-14 Temperature Distribution for Accident Condition, 200 h at 46 °C (115 °F) after the Fire Event B8-16

B8-15 Maximum Temperature History at the Container Seal B8-17

B8-16 Maximum Temperature History at Exterior Wall of Overpack B8-17

LIST OF FIGURES (cont)

B8-17 Maximum Temperature History at Interior Wall of Overpack B8-18

B8-18 Maximum Temperature History at Exterior Wall of Inner Pack . . . B8-18

B10-1 Tiedown Assembly Dimensions B10-1

B10-2 Tiedown Dimensions, Plan View B10-2

B10-3 Transport Load Components B10-3

B10-4 Oblique Direction Dimensions B10-5

B10-5 Tiedown Base Frame B10-10

LIST OF TABLES

A2-1 Doorstop Sample Carrier System Weights A2-5

A3-1 Solid Tank Waste Source Terms for the Doorstop A3-2

A4-1 External Package Contamination Limits A4-3

A4-2 Gas Generation in 1.6-mL, 20-mL, and 125-mL Samples in the Doorstop Container A4-3

A4-3 Gas Generation Shipping Windows Limits Based on Concentration . . . A4-4

A4-4 Nuclide Content (Ci/L by Case Number A4-5

A5-1 Quality Level A-3 Fabrication Testing and Inspections A5-1

A5-2 Quality Level B-3 Fabrication Inspections and Tests A5-2

A5-3 Quality Level C-3 Fabrication Tests and Inspections A5-2

A5-4 Quality Level A-3 Component Inspections A5-3

A5-5 Quality Level B-3 Component Inspections A5-3

A5-6 Quality Level C-3 Component Inspections A5-4

A7-1 Procurement and Fabrication Quality Levels A7-4

A8-1 Quality Level A-3 Maintenance Requirements A8-1

A8-2 Quality Level B-3 Maintenance Requirements A8-1

A8-3 Quality Level C-3 Maintenance Requirements A8-2

B2-1 Solid Tank Waste Source Terms for the Doorstop B2-2

B2-2 Inner Packaging Normally Used in Doorstop Container B2-3

B5-1 Solid Tank Waste Source Terms for the Doorstop Sample Carrier System B5-2

B5-2 Photon Emission Rates (Photons/s) for the Doorstop Sample Carrier System B5-3

B5-3 Photon Fluence-to-dose Conversion Factors B5-5

B5-4 Doorstop Sample Carrier System Radial Geometry and Material Composition B5-7

B5-5 Doorstop Sample Carrier System Axial Geometry and Material Composition B5-7

LIST OF TABLES (cont)

B5-6 Dose Rates Outside the Doorstop Sample Carrier System, mSv/h (mrem/h) B5-8

B5-7 Comparison of Maximum Dose Rates, mSv/h (mrem/h), with Dose Rate Limits B5-10

B6-1 Doorstop Sample Carrier System Fissile Inventory B6-1

B7-1 Mechanical Properties of Materials B7-2

B7-2 Doorstop Sample Carrier System Weights B7-3

B8-1 Material Properties of 304 Stainless Steel B8-2

B8-2 Material Properties of Mild Carbon Steel B8-2

B8-3 Material Properties of Air B8-4

B8-4 Convection Heat Transfer Coefficient of Air Ambient Temperature at 46 °C (115 °F) B8-8

B8-5 Convection Heat Transfer Coefficient of Air Ambient Temperature at -40 °C (-40 °F) B8-8

B8-6 Case 2 Replacement B8-9

B8-7 Normal Condition Thermal Analysis Results Maximum Temperature Except Indicated by Min B8-9

B8-8 Convection Heat Transfer Coefficient of Air Ambient Temperature at 800 °C (1475 °F) B8-12

B8-9 Fire Accident Thermal Analysis Results B8-19

B9-1 Gas Generation in 875 mL (29.6 oz) Samples in the Doorstop Sample Carrier System B9-1

LIST OF TERMS

AISC	American Institute of Steel Construction
ANSI	American National Standards Institute
ASME	American Society of Mechanical Engineers
ASTM	American Society for Testing and Materials
AWS	American Welding Society
BPVC	*Boiler and Pressure Vessel Code*
CFR	*Code of Federal Regulations*
Ci	curie
Ci/L	curies per liter
cm	centimeter
DOT	U.S. Department of Transportation
ft	feet
in.	inch
kg	kilogram
lb	pound
m	meter
mL	milliliter
mrem/h	millirem per hour
mSv/h	millisievert per hour
NRC	U.S. Nuclear Regulatory Commission
NuPac	Nuclear Packaging, Incorporated
OD	outside diameter
OTC	Onsite Transfer Cask
oz	ounce
PQS	Procurement Quality Support
QA	quality assurance
QC	Quality Control
QL	Quality Level
PQS	Procurement Quality Support
SARP	safety analysis report for packaging
SS	stainless steel
THI	Transportation Hazard Indicator
USQ	unresolved safety question
WHC	Westinghouse Hanford Company

SAFETY ANALYSIS REPORT FOR PACKAGING (ONSITE) DOORSTOP SAMPLE CARRIER SYSTEM

PART A: PACKAGE DESCRIPTION AND OPERATIONS

1.0 INTRODUCTION

1.1 GENERAL INFORMATION

The Doorstop Sample Carrier System consists of a Type B certified N-55 overpack, U.S. Department of Transportation (DOT) specification or performance-oriented 208-L (55-gal) drum (DOT 208-L drum), and Doorstop containers. Up to seven Doorstop containers may be placed inside the DOT 208-L drum. The contents are packaged in several configurations inside the Doorstop containers: within a lead pak cylinder, within a slip lid can, food pack can, or paint can, or within sample pipettes inside the Doorstop sample carrier. Two Doorstop Sample Carrier Systems may be carried on the transport vehicle. The purpose of the Doorstop Sample Carrier System is to transport samples onsite for characterization. The package is authorized to transport tank farm solid, slurry, or liquid 125-mL (4.3-fl oz) samples or less per Doorstop container. The Doorstop Sample Carrier System is limited to 875 mL (29.6 fl oz).

This safety analysis report for packaging (SARP) provides the analyses and evaluation necessary to demonstrate that the Doorstop Sample Carrier System meets the requirements and acceptance criteria for both Hanford Site normal transport conditions and accident condition events for a Type B package. This SARP also establishes operational, acceptance, maintenance, and quality assurance (QA) guidelines to ensure that the method of transport for the Doorstop Sample Carrier System is performed safely in accordance with WHC-CM-2-14, *Hazardous Material Packaging and Shipping*.

The packaging meets all WHC-CM-2-14 requirements of a Transportation Hazard Indicator (THI) 3 performance packaging for the Hanford Site. Evaluation by analysis and fabrication leak testing per American National Standards Institute (ANSI) N14.5 (ANSI 1987) demonstrates packaging performance and safety. Onsite approval for shipment is based on the performance qualifications of the N-55 overpack, performing a drop test structural comparison to the Sample Pig Shipping Container (which also uses the N-55 Overpack System), and performing structural analysis on the Doorstop containers.

1.2 SYSTEM DESCRIPTION

The Doorstop Sample Carrier System is an onsite, interarea packaging for transferring Type B radioactive material on the Hanford Site in accordance

with WHC-CM-2-14. The analyses and evaluations performed in this SARP demonstrate that this packaging complies with the onsite transportation safety criteria.

The Doorstop Sample Carrier System consists of a Type B certified N-55 overpack, a DOT 208-L drum, and the content containers. The N-55 overpack is manufactured by VECTRA Technologies, Inc (VECTRA). The overpack is a right circular cylinder consisting of two parts. Closure of the upper and lower (lid and body) sections of the overpack is provided by four toggle clamps and a Neoprene[1] gasket at the stepped joint between the two sections. The N-55 overpack carries a Certificate of Compliance (CoC [USA/9070/B(U)]) (NRC 1994). This approval constitutes authority to use the package for the shipment of solid or dry radioactive material. The contents of the Doorstop Sample Carrier System also include liquid samples. As the certificate does not apply to the liquid contents, it is necessary to demonstrate that the Doorstop Sample Carrier System maintains containment of the contents to meet the onsite packaging safety criteria.

The N-55 overpack has been built for years. Nuclear Packaging, Inc. (NuPac) produced the initial overpack design certified by the U.S. Nuclear Regulatory Commission (NRC), CoC USA/9070/B(U). Over the years, minor changes were made to the overpack design. The changes in the overpack design were reflected in the request for certification submittals to the NRC. In 1994, the package design was transferred to VECTRA. The current CoC USA/9070/B(U), Rev. 12, is held by VECTRA. For onsite use, overpacks built for NuPac, VECTRA, or other authorized companies may be used. The overpacks built to any of the designs covered by the revision of the certification are authorized for use under this SARP.

The second packaging component is a DOT 208-L drum (stainless steel or galvanized). The drum lid contains a 0.95-cm (⅜-in.) tubular NEOZAN[2] gasket. The space inside the drum is occupied by three separate sections of expanded polystyrene beadboard. A layer of plywood over the bottom beadboard provides a base on which the Doorstop containers rest. The second layer of beadboard has seven cavities sized to fit Doorstop containers. The third solid section of beadboard with a plywood face fills the rim.

The third packaging component is the Doorstop container (H-2-73008), which is considered to be the package containment boundary. The Doorstop container is a similar design to the DOT Specification 2R container. A handle is attached to the lid to permit handling manually or by hoist. The containers are serially numbered by metal impression stamping on the lid and the body. Absorbent material is placed inside the container to absorb twice the amount of liquid in the event of a spill.

The fourth packaging component is the Doorstop sample carrier (see Figure A2-1). The Doorstop sample carriers are built to two designs. One design is constructed of 304-L stainless steel American Society for Testing and Materials (ASTM) A-240. A second design is constructed of 304-L stainless

[1] Neoprene is a trademark of E. I. du Pont de Nemours and Company.

[2] NEOZAN is a trademark of Self Industries.

steel A-240 and lead. The Doorstop sample carriers are serially numbered by metal impression stamping on the top face of the body portion. The Doorstop sample carriers with a number only are stainless steel units. The lead-lined Doorstop sample carriers have the letter "L" immediately following the number. Two, 0.159-cm- (1/16-in.-) deep grooves have been machined into the cylindrical surface of the body of the lead-lined Doorstops for identification purposes. The individual samples are placed into polyethylene pipettes. The pipettes are then placed into a Doorstop sample carrier insert, and then the Doorstop sample carrier is placed inside the Doorstop container.

The Doorstop container may also be used as a packaging for larger liquid samples. These samples are contained in polyethylene or glass bottles with screw lids. The bottles are placed in a polyethylene bag and sealed (tape or heat sealed). The bagged sample bottles are placed inside a slip lid, food pack can, or paint can; filled with absorbent (noncellulosic inert absorbent); sealed with a wrap of tape; and loaded into the Doorstop container, which is then screwed shut.

There is an additional configuration of the Doorstop container that may be used for shipment of waste tank samples. A vial containing the sample is placed into a lead pak cylinder, which is placed into a slip lid can that is inside the Doorstop container.

1.3 REVIEW AND UPDATE CYCLES

This SARP is subject to periodic reviews and updates. The reviews shall be performed every five years to ensure that all SARP evaluations and other included information meet new or revised regulatory and/or company requirements. The first complete review and update of the Doorstop Sample Carrier System SARP will be approximately February 2002. Review shall be through the formal process per Part A, Section 7.5.

This page intentionally left blank.

2.0 PACKAGING SYSTEM

2.1 CONFIGURATION AND DIMENSIONS

The Doorstop Sample Carrier System has a maximum gross weight of approximately 324 kg (715 lb). See Figures A2-1 and A2-2.

The N-55 overpack is a right circular cylinder 122 cm (48 in.) high by 81 cm (32 in.) in diameter with a 89-cm- (35-in.-) high by 61-cm- (24-in.-) diameter cavity. The overpack acts as an impact limiter and thermal shield for the Doorstop Sample Carrier System. The overpack shell is constructed of 1-mm (20-gauge) galvanized steel filled with 48.1 kg/m^3 (3 lb/ft^3) rigid polyurethane foam. The packaging component, which is placed within the N-55 overpack, is a DOT 208-L drum with dimensions of 89 cm (35 in.) high and 61 cm (24 in.) in diameter. The steel drum must have a minimum wall thickness of 1.3 mm (18 gauge), with a minimum 1.9-mm (14-gauge) steel lid. Closure of the drum is by way of a 2.7-mm (12-gauge) locking ring with drop-forged lugs and a 1.59-cm- (5/8-in.-) diameter bolt and lock nut.

The third packaging component which fits inside the DOT 208-L drum, is the Doorstop container. The Doorstop container is similar to a DOT 2R container and is 28.91 cm (11.38 in.) tall by 16.21 cm (6.38 in.) in diameter. The Doorstop container weighs approximately 14.5 kg (32 lb). The upper end of the Doorstop container is faced, threaded, and machined to provide for an O-ring seal (see Figure A2-1).

The Doorstop sample carriers, which are placed within the Doorstop container, are built to two designs. One design, approximately 12.7 kg (28 lb) is constructed of 304-L stainless steel A-240. A second design, approximately 14.5 kg (32 lb), is constructed of 304-L stainless steel A-240 and lead. The base portion of both Doorstop sample carrier designs (stainless steel and lead lined) are 11.4 cm (4.5 in.) in diameter and 14.3 cm (5.625 in.) high. The individual samples are placed into polyethylene pipettes, which come in three sizes: 0.5 mL, 1.0 mL, and 1.6 mL. The pipette is placed into a Doorstop sample carrier insert positioned into a hole 5 cm (2 in.) in diameter by 4.3 cm (1.625 in.) in depth in the Doorstop sample carrier body. A lead-filled plug is lowered over the Doorstop sample carrier insert. The lower face of the Doorstop sample carrier plug is designed with a 3.8-cm- (1.5-in.-) diameter by 0.318-cm- (0.125-in.-) deep recess into which a 3.8-cm- (1.5-in.-) diameter by 0.64-cm- (0.25-in.-) thick gasket of 20 durometer Neoprene[3] rubber is placed. The Doorstop sample carrier handle (yoke) is notched at each end and mounts on the two side-mounted bolts. The yoke contains a special handle stud assembly. The stud consists of a 0.953-cm (0.375-in.) hex head bolt that has been modified by welding a 1.27-cm (0.5-in.) wing nut to the bolt forming a wing nut bolt. The bolt has also been modified by welding a 1.9-cm- (0.75-in.-) diameter by 0.953-cm- (0.375-in.-) long rod to the bottom. When the plug is lowered into the cavity and the handle is attached, the wing nut and rod apply pressure on the top surface of the plug, compressing the rubber gasket against the face of the

[3] Neoprene is a trademark of E. I. du Pont de Nemours and Company.

Figure A2-1. Doorstop Sample Carrier System Contents.

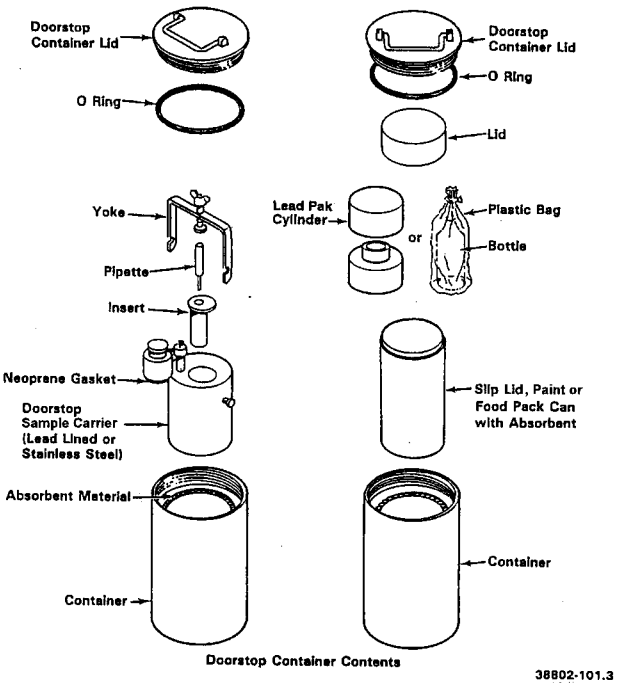

Figure A2-2. Doorstop Sample Carrier System.

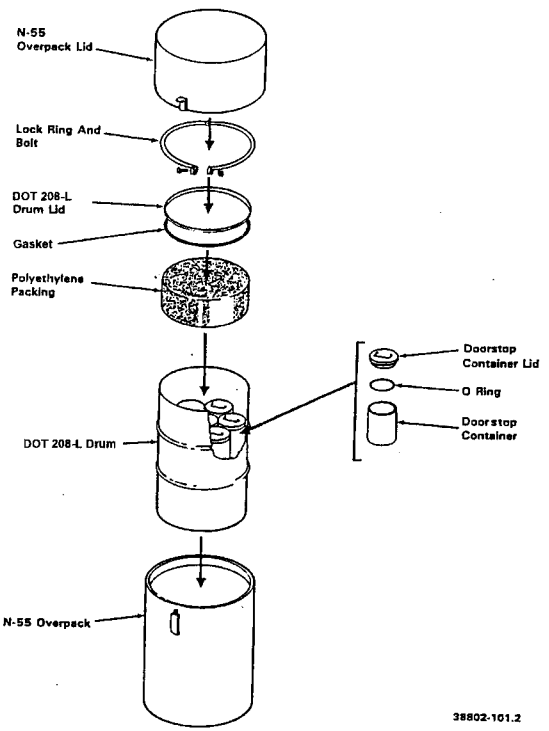

Doorstop Sample Carrier System

styrene insert and providing a seal to hold the liquid sample inside the insert. The rubber gasket is sandwiched between the plug and the plastic insert.

A lead pak cylinder is another configuration that can be placed in the Doorstop container for shipments of waste tank samples. The lead cylinder is approximately 13 cm (5.125 in.) in height with a 8.3-cm (3.25-in.) outside diameter. The inner cavity of the lead cylinder is approximately 8.9 cm (3.5 in.) by 3.18 cm (1.25 in.). The cylinder weighs approximately 6.6 kg (14.5 lb). The lead walls of the cylinder are 2.54 cm (1 in.) thick on the sides and the bottom of the cavity and 1.6 cm (0.625 in.) thick on the top of the cavity.

2.2 MATERIALS OF CONSTRUCTION

The structural materials for the Doorstop Sample Carrier System are as follows:

- *N-55 overpack*: 1-mm (20-gauge) galvanized steel and 48.1 kg/m^3 (3 lb/ft^3) rigid polyurethane foam per NuPac Specification No. X-60-N55F
- *DOT 208-L drum*: stainless or galvanized carbon steel
- *Doorstop container*: 304-L seamless stainless steel pipe
- *Doorstop sample carrier*: lead lined and/or 304-L stainless steel
- *Lead pak cylinder*: lead.

Other materials utilized are:

- Overpack fiberglass molded inner shell
- Overpack expanded honeycomb Type KP1/2 80(11)E, Type HNC 3/4 80(16)E or equal
- NEOZAN gasket on the drum
- Expanded polystyrene beadboard and plywood
- Neoprene O-ring on the Doorstop container.

2.3 MECHANICAL PROPERTIES OF MATERIAL

The mechanical material properties for the Doorstop Sample Carrier System are presented in Part B, Section 7.2.2.

2.4 DESIGN AND FABRICATION METHODS

Design, fabrication, and testing of the Doorstop containment boundary were performed per the requirements of the American Society of Mechanical Engineers (ASME) *Boiler and Pressure Vessel Code* (BPVC), Section VIII (ASME 1995). Based on Regulatory Guide 7.11, Table 1 (NRC 1991), the Doorstop system is Category III. The containment boundary design follows the criteria from ASME BPVC, Section VIII. The structural analyses criteria meets ASME BPVC, Section VIII, requirements.

All welders are required to be qualified per ASME, Section IX (ASME 1995). The containment weld is dye penetrant and visually inspected. During fabrication, welds are made sufficiently rounded to enable easy decontamination.

During fabrication, inspections and containment leak testing of the Doorstop are performed per Hanford Site procedures and ANSI N14.5 (ANSI 1987), respectively.

2.5 WEIGHTS AND CENTER OF GRAVITY

The weight of the packagings that makes up the Doorstop Sample Carrier System and the total weight are shown in Table A2-1. The total weight of the Doorstop Sample Carrier System with seven Doorstops is 324 kg (715 lb) with center of gravity located on the vertical centerline of the packaging 55.3 cm (21.78 in.) from the bottom.

Table A2-1. Doorstop Sample Carrier System Weights.

Component	Weight kg (lb)
Overpack	90.7 (200)
Drum with padding	30.4 (67)
Doorstop containers (seven)	101.6 (224)
Doorstops (seven)	101.6 (224)
Total	324 (715)

2.6 CONTAINMENT BOUNDARY

The Doorstop container provides the containment boundary. The containment boundary consists of the following items as shown on Figure A2-1:

- Doorstop container closure lid
- Doorstop container body.

The closure lid is threaded with and has an O-ring gasket, which provides a seal. The containment boundary meets the definition of leaktight given in

ANSI N14.5 (ANSI 1987). The DOT 208-L drum provides a secondary containment boundary with its gasket and bolted lid. For a complete description of the containment system, refer to Part B, Section 4.0.

The containment boundary meets the required leak rate of 5.81×10^{-5} std-cc/s, air, as required by the A_2 value of the radionuclide contents shown in Part B, Section 4.0.

2.7 CAVITY SIZE

The Doorstop container cavity size is 22.56 cm (8.88 in.) in height by 14 cm (5.5 in.) in diameter.

2.8 HEAT DISSIPATION

No special devices are used for the transfer or dissipation of heat. Refer to Part B, Section 8.0, for the thermal evaluation of the Doorstop Sample Carrier System. Maximum allowable decay heat is 3 W per Doorstop Sample Carrier System. Heat is dissipated passively.

2.9 SHIELDING

Radiation shielding is provided based on the contents of the Doorstop Sample Carrier System. The walls of the Doorstop container are stainless steel. The shielding provided inside the Doorstop container is lead, stainless steel, or a combination of both. The lead pak is a solid lead cylinder. The Doorstop sample carrier is constructed of either solid stainless steel or stainless steel clad lead. Refer to Part B, Section 5.0, for the shielding evaluation.

2.10 LIFTING DEVICES

The lifting device for the N-55 overpack lid consists of a lifting beam that is attached to the N-55 lid via four J-bolts.

The lifting device for the Doorstop container consists of a handle that is attached to the lid. The handle permits handling manually or by hoist.

The lifting device for the Doorstop sample carriers consists of a lifting yoke, which is notched at each end and mounts on the two side mounted bolts. The yoke contains a special handle stud assembly.

2.11 TIEDOWN DEVICES

There are no tiedown devices that are a structural part of the package. Therefore, the 49 CFR 173 requirements of 10*g*, 5*g*, and 2*g* are not required to be met or analyzed.

3.0 PACKAGE CONTENTS

3.1 GENERAL DESCRIPTION

The Doorstop Sample Carrier System is used to transport liquid or solid samples. The solid radionuclide composition that bounds the liquid tank waste for all areas considered in this SARP is from WHC-SD-WM-SARR-016 (WHC 1996); i.e., shielding, dose consequence, thermal, gas generation, criticality. Therefore, as shown in Part B, Section 2.0, the source terms were established using the solid tank waste activity concentrations. Two different source terms were evaluated in the shielding section. These source terms were identified as 875 mL (29.6 fl oz) of the maximum expected source term and 875 mL (29.6 fl oz) worst-case source term. The worst-case source term was developed by first determining the maximum activity concentration of each radionuclide using the existing sample data from all of the tanks. These activity concentrations were assumed to exist in a single tank, thus creating a worst-case source term. Consequently, it is not possible to have a sample that contains all of the maximum radionuclide quantities because they are from several different tanks. Historically, the dose rates on the surface of the Doorstop Sample Carrier System have been less than 2 mSv/h (200 mrem/h). Therefore, a second "maximum expected" source term was developed based on a 2 mSv/h (200 mrem/h) dose rate at the N-55 overpack surface. The shielding section focuses on 875 mL (29.6 fl oz) of the maximum expected source term and 875 mL (29.6 fl oz) of the worst-case source term since these two source terms are bounding from a radioactive inventory standpoint.

Table A3-1 shows the worst-case and maximum expected solid tank waste activity concentrations along with the radioactive inventory for these two source terms. Note that all other loads result in a smaller volume of radioactive material and in most cases additional packaging components that provide more shielding.

The heat generation rate for 875 mL (29.6 fl oz) of the worst-case source term is 4.9×10^{-1} W, as can be seen in the gas generation analysis in Part B, Section 9.0. The 875 mL (29.6 fl oz) of the maximum expected source term corresponds to 5.0 A_2s, and 875 mL (29.6 fl oz) of the worst-case source term contains 93 A_2s as shown in Table B3-1. Therefore, the package is authorized to transport Type B quantities of radioactive material.

Fissile material is less than 15 g based on 875 mL (29.6 fl oz) of the maximum expected source term and 875 mL (29.6 fl oz) of the worst-case source term. Therefore, all shipments of the Doorstop Sample Carrier System are exempt from fissile material classification (10 CFR 71.53).

The package is authorized for up to 875 mL (29.6 fl oz) of the maximum expected source term and 875 mL (29.6 fl oz) of the worst-case source term. The chemical forms of authorized contents are water, hydrogen peroxide, sodium hydroxide, sodium nitrate, tri-butyl phosphate, normal paraffin hydrocarbon, and nitric acid.

Table A3-1. Solid Tank Waste Source Terms for the Doorstop.

Nuclide	Worst-case solids activity concentration[e] (Ci/L)	A_2 (Ci)[a]	875 mL (29.6 oz) maximum[b] expected (Bq)	875 mL (29.6 oz) maximum[b] expected (Ci)	A_2s	875 mL (29.6 oz)[c] worst case (Bq)	875 mL (29.6 oz)[c] worst case (Ci)	A_2s
^{14}C	4.3 E-06	5.4 E+01	7.4 E+03	2.0 E-07	3.7 E-09	1.4 E+05	3.8 E-06	7.0 E-08
^{60}Co	1.3 E-02	1.1 E+01	2.3 E+07	6.1 E-04	5.7 E-05	4.1 E+08	1.1 E-02	1.0 E-03
^{79}Se	4.6 E-07	5.4 E+01	8.1 E+02	2.2 E-08	4.1 E-10	1.5 E+04	4.0 E-07	7.4 E-09
^{90}Sr	7.8 E+01	2.7 E+00	1.4 E+11	3.7 E+00	1.4 E+00	2.5 E+12	6.8 E+01	2.5 E+01
^{90}Y[f]	7.8 E+01	5.4 E+00	1.4 E+11	3.7 E+00	0.0	2.5 E+12	6.8 E+01	0.0
^{99}Tc	3.2 E-01	2.4 E+01	5.6 E+08	1.5 E-02	6.2 E-04	1.0 E+10	2.8 E-01	1.2 E-02
^{106}Ru	1.9 E-06	5.4 E+00	3.3 E+03	8.9 E-08	1.7 E-08	6.3 E+04	1.7 E-06	3.1 E-07
^{106}Rh[f]	1.9 E-06	0.0	3.3 E+03	8.9 E-08	0.0	6.3 E+04	1.7 E-06	0.0
^{125}Sb	4.9 E-03	2.4 E+01	8.5 E+06	2.3 E-04	9.5 E-06	1.6 E+08	4.3 E-03	1.8 E-04
^{129}I	1.7 E-04	Unlimited	3.0 E+05	8.0 E-06	0.0	5.6 E+06	1.5 E-04	0.0
^{134}Cs	2.5 E-04	1.4 E+01	4.4 E+05	1.2 E-05	8.9 E-07	8.1 E+06	2.2 E-04	1.6 E-05
^{137}Cs	2.7 E+00	1.4 E+01	4.8 E+09	1.3 E-01	9.6 E-03	8.9 E+10	2.4 E+00	1.8 E-01
^{137m}Ba[f]	2.6 E+00	0.0	4.4 E+09	1.2 E-01	0.0	8.5 E+10	2.3 E+00	0.0
^{144}Ce	9.2 E-09	5.4 E+00	1.6 E+01	4.3 E-10	8.0 E-11	3.0 E+02	8.1 E-09	1.5 E-09
^{144}Pr[f]	9.2 E-09	0.0	1.6 E+01	4.3 E-10	0.0	3.0 E+02	8.1 E-09	0.0
^{154}Eu	3.0 E-01	1.4 E+01	5.2 E+08	1.4 E-02	1.0 E-03	9.6 E+09	2.6 E-01	1.9 E-02
^{155}Eu	1.4 E-04	5.4 E+01	2.4 E+05	6.6 E-06	1.2 E-07	4.4 E+06	1.2 E-04	2.2 E-06
^{237}Np	2.7 E-02	5.4 E-03	4.8 E+07	1.3 E-03	2.4 E-01	8.9 E+08	2.4 E-02	4.4 E+00
^{238}Pu	5.1 E-03	5.4 E-03	8.9 E+06	2.4 E-04	4.4 E-02	1.7 E+08	4.5 E-03	8.3 E-01
^{239}Pu	4.3 E-02	5.4 E-03	7.4 E+07	2.0 E-03	3.7 E-01	1.4 E+09	3.8 E-02	7.0 E+00
^{240}Pu[d]	4.3 E-02	5.4 E-03	7.4 E+07	2.0 E-03	3.7 E-01	1.4 E+09	3.8 E-02	7.0 E+00
^{241}Pu	1.0 E-01	2.7 E-01	1.7 E+08	4.7 E-03	1.7 E-02	3.3 E+09	8.8 E-02	3.3 E-01
^{241}Am	3.0 E-01	5.4 E-03	5.2 E+08	1.4 E-02	2.6 E+00	9.6 E+09	2.6 E-01	4.8 E+01
^{242}Cm	5.4 E-09	2.7 E-01	9.3 E+00	2.5 E-10	9.3 E-10	1.7 E+02	4.7 E-09	1.7 E-08
^{244}Cm	1.6 E-03	1.1 E-02	2.8 E+06	7.5 E-05	6.9 E-03	5.2 E+07	1.4 E-03	1.3 E-01
Totals	1.6 E+02	----	2.9 E+11	7.7 E+00	5.0 E+00	5.3 E+12	1.4 E+02	9.3 E+01

[a] A_2 values taken from 49 CFR 173.435, 1995, "Shippers--General Requirements for Shipments and Packagings," Code of Federal Regulations, as amended.

[b] Maximum expected source term derived using the solid tank waste activity concentrations (Ci/L) and multiplying by the factor 0.047 such that the total Doorstop radioactive loading results in a dose rate less than 2 mSv/h (200 mrem/h) at the package surface.

[c] Worst-case source term assumes 875 mL (29.6 oz) of solid tank waste.

[d] ^{240}Pu conservatively set equal to ^{239}Pu.

[e] Values taken from WHC-SD-WM-SARR-016, Rev. 2 (WHC 1996). Daughters calculated using ORIGEN2.

[f] This radionuclide is a daughter as defined in 49 CFR 173.433; therefore, its activity was set to 0 for the A_2 calculations.

WHC, 1996, Tank Waste Compositions and Atmospheric Dispersion Coefficients for Use in Safety Analysis Consequence Assessments, WHC-SD-WM-SARR-016, Rev. 2, Westinghouse Hanford Company, Richland, Washington.

3.2 CONTENT RESTRICTIONS

3.2.1 Radioactive Materials

Solid, liquid, or slurry samples are limited to a maximum of 125 mL (4.3 fl oz) per Doorstop container. These samples are limited to a maximum of 875 mL (29.6 fl oz) per Doorstop Sample Carrier System when seven maximum loaded Doorstop containers are in the package. Radioactivity in the contents must be bounded by the material limits shown in Table A3-1. A maximum of 0.74 TBq (20 Ci) or 15 g of fissile material applies to shipments in the Doorstop Sample Carrier System.

3.2.2 Nonradioactive Materials

Nonradioactive materials are (1) aqueous solutions or solid mixtures of oxides, nitrites, nitrates, phosphates, sulfates, fluorides, chlorides, and tricalcium aluminate or (2) organic compounds or extraction liquids.

This page intentionally left blank.

4.0 TRANSPORT SYSTEM

4.1 TRANSPORTER

The Doorstop Sample Carrier System is transported by an exclusive-use vehicle. The vehicle may transport two Doorstop Sample Carrier Systems at a time. Transfer of the Doorstop Sample Carrier System is restricted to trucks 1C392 and 1C393. Other vehicles may be authorized to transfer the Doorstop Sample Carrier System, provided it is shown that they (1) have equivalent gross vehicle weight limits, tiedown frames, and overhead hoist capacities and heights and (2) are generally similar to the previously mentioned vehicles.

4.2 TIEDOWN SYSTEM

The tiedown system for the Doorstop Sample Carrier System is shown in Figure A4-1. The tiedown strap assembly shall have a minimum tensile strength of 907 kg (2,000 lb). An analysis and discussion of the tiedown system are provided in Part B, Section 10.0.

4.3 SPECIAL TRANSFER REQUIREMENTS

The following requirements are acceptable based on the qualifications of the certified N-55 overpack and DOT 208-L drum for protection and containment of the Doorstop container and contents.

4.3.1 Routing and Access Control

The Doorstop Sample Carrier System shall be transported north of the Wye Barricade following the below restrictions. Routing between the 200 Areas and the 300 Area shall require the roads to be closed to prevent public access during the transport.

4.3.2 Radiological Limitations

There are two sets of dose rate limitations based on the "maximum expected" and "worst case" source terms. Both source terms can result in exceeding dose rate limits associated with general transport conditions and at least one of the exclusive-use conditions. Therefore, the two sets of limits identified below were established. Exclusive-use transportation, following the modified conditions identified, applies when using these limits. The "maximum expected" limitations are based on a mixture of general transportation conditions and exclusive conditions. The "worst case" limitations are based on exclusive-use conditions. In both sets of limitations, limits such as the use of a closed vehicle and maximum vehicle surface dose were not used.

- *Maximum expected*: Transportation dose rate limitations are: the accessible surface of the package and the exterior surface of the vehicle must be below 2 mSv/h (200 mrem/h), less than 0.1 mSv/h

Figure A4-1. Tiedown Configuration.

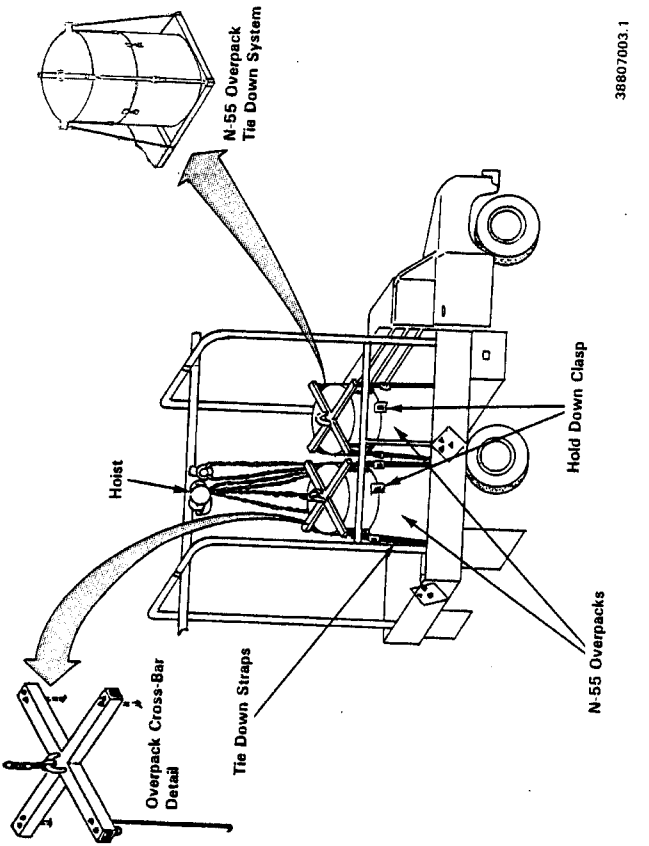

(10 mR/h) at 2 m from the package, and less than 0.02 mSv/h (2mR/h) in the cab of the transporter (49 CFR 173.441). If dose rates exceed these limits, refer to the next paragraph.

- *Worst case*: Follow the administrative controls found in Part A, Section 6.5 (Excessive Dose Rate Transport). Transportation dose rate limitations are: the accessible surface of the package must be below 10 mSv/h (1000 mrem/h), the exterior surface of the vehicle must be below 2 mSv/h (200 mrem/h), less than 0.1 mSv/h (10 mrem/h) at 2 m from the exterior surface of the vehicle, and less than 0.05 mSv/h (5 mrem/h) in the cab of the transporter if the driver is a qualified radiological worker. If the dose rates exceed these limits, contact Packaging Engineering for direction.

External contamination limits are as shown in Table A4-1 for the exterior of the package.

Table A4-1. External Package Contamination Limits.

Contaminant	Maximum permissible limits		
	Bq/cm^2	$\mu Ci/cm^2$	dpm/cm^2
Beta and gamma emitters and low-toxicity alpha emitters	0.4	10^{-5}	22
All other alpha-emitting radionuclides	0.04	10^{-6}	2.2

Source: 49 CFR 173.443, 1995, "Shippers--General Requirements for Shipments and Packagings," Code of Federal Regulations, as amended.

4.3.3 Time Restrictions

Flammable gas generation limits the time the Doorstop container can remain sealed without approaching flammable limits. Generally, the maximum time a Doorstop container can remain sealed is shown in Table A4-2. Since flammability is a significant safety item, the worst-case source term is used.

Table A4-2. Gas Generation in 1.6-mL, 20-mL, and 125-mL Samples in the Doorstop Container.

	Worst-case material		
Payload volume	1.6 mL	20 mL	125 mL
Shipping window	39 days	6.4 days	4.8 days
Pressure rise to 50% lower flammability limit (psi)	0.455	0.456	0.456
Pressure rise in 45 days (psi)	0.52	3.19	4.24

Because several of the generic shipping configurations have short time limits, alternate time limits based on concentration ranges are presented. Table A4-3 shows the material concentration ranges (four) and shipping windows

relative to the sample sizes. These four ranges are based on percentages of the worst-case material. Table A4-4 shows the maximum concentration for each radionuclide for the four ranges. The header in Table A4-4 shows each range by case numbers 1 though 4 and the maximum percentage of the range. Table A4-3 shows these nuclide content case numbers cross-referenced relative to sample size and concentration ranges.

Table A4-3. Gas Generation Shipping Windows Limits Based on Concentration.

Sample	Material concentration range	Shipping window (days)	Nuclide content case No.
1.6 mL or less in Doorstop carrier	> 75% and < 100%	39	1
	> 50% and ≤ 75%	50	2
	> 25% and ≤ 50%	70	3
	> 0% and ≤ 25%	117	4
20 mL or less in lead pak cylinder	> 75% and < 100%	6.4	1
	> 50% and ≤ 75%	8	2
	> 25% and ≤ 50%	11.5	3
	> 0% and ≤ 25%	19	4
125 mL (4.3 fl oz)	> 75% and < 100%	4.8	1
	> 50% and ≤ 75%	6	2
	> 25% and ≤ 50%	8.5	3
	> 0% and ≤ 25%	14.5	4

When using the shipping window limits from Table A4-3, the shipper must ensure that the upper concentration level of the range shown in Table A4-4 is not exceeded for any nuclide. It is acceptable for the concentration to be lower than the bottom of the range. It is also acceptable for a nuclide to not be present in the payload.

Table A4-4. Nuclide Content (Ci/L) by Case Number.

Nuclide	Case 1 Payload activity Concentration 100% of worst case material[a]	Case 2 Payload activity concentration 75% of worst case material	Case 3 Payload activity concentration 50% of worst case material	Case 4 Payload activity concentration 25% of worst case material
^{14}C	4.3 E-06	3.2 E-06	2.2 E-06	1.1 E-06
^{60}Co	1.3 E-02	9.8 E-03	6.5 E-03	3.3 E-03
^{79}Se	4.6 E-07	3.5 E-07	2.3 E-07	1.2 E-07
^{90}Sr	7.8 E+01	5.9 E+01	3.9 E+01	2.0 E+01
^{90}Y[b]	7.8 E+01	5.9 E+01	3.9 E+01	2.0 E+01
^{99}Tc	3.2 E-01	2.4 E-01	1.6 E-01	8.0 E-02
^{106}Ru	1.9 E-06	1.4 E-06	9.5 E-07	4.8 E-07
^{106}Rh[b]	1.9 E-06	1.4 E-06	9.5 E-07	4.8 E-07
^{125}Sb	4.9 E-03	3.7 E-03	2.5 E-03	1.2 E-03
^{129}I	1.7 E-04	1.3 E-04	8.5 E-05	4.3 E-05
^{134}Cs	2.5 E-04	1.9 E-04	1.3 E-04	6.3 E-05
^{137}Cs	2.7 E+00	2.0 E+00	1.4 E+00	6.8 E-01
^{137m}Ba[b]	2.6 E+00	2.0 E+00	1.3 E+00	6.5 E-01
^{144}Ce	9.2 E-09	6.9 E-09	4.6 E-09	2.3 E-09
^{144}Pr[b]	9.2 E-09	6.9 E-09	4.6 E-09	2.3 E-09
^{154}Eu	3.0 E-01	2.3 E-01	1.5 E-01	7.5 E-02
^{155}Eu	1.4 E-04	1.1 E-04	7.0 E-05	3.5 E-05
^{237}Np	2.7 E-02	2.0 E-02	1.4 E-02	6.8 E-03
^{238}Pu	5.1 E-03	3.8 E-03	2.6 E-03	1.3 E-03
^{239}Pu	4.3 E-02	3.2 E-02	2.2 E-02	1.1 E-02
^{240}Pu[c]	4.3 E-02	3.2 E-02	2.2 E-02	1.1 E-02
^{241}Pu	1.0 E-01	7.5 E-02	5.0 E-02	2.5 E-02
^{241}Am	3.0 E-01	2.3 E-01	1.5 E-01	7.5 E-02
^{242}Cm	5.4 E-09	4.1 E-09	2.7 E-09	1.4 E-09
^{244}Cm	1.6 E-03	1.2 E-03	8.0 E-04	4.0 E-04
Totals	1.6 E+02	1.2 E+02	8.0 E+01	4.0 E+01

[a] Values taken from WHC-SD-WM-SARR-016, Rev. 2 (WHC 1996). Daughters calculated ORIGEN2.

[b] This radionuclide is a daughter as defined in 49 CFR 173.433; therefore, its activity was set to 0 for the A2 calculations.

[c] ^{240}Pu conservatively set equal to ^{239}Pu.

49 CFR 173, 1995, "Shippers--General Requirements for Shipments and Packagings," Code of Federal Regulations, as amended.

WHC, 1996, Tank Waste Compositions and Atmospheric Dispersion Coefficients for Use in Safety Analysis Consequence Assessments, WHC-SD-WM-SARR-016, Rev. 2, Westinghouse Hanford Company, Richland, Washington.

4.3.4 Speed Limitations

The transport vehicle shall follow the posted speed limits.

4.3.5 Environmental Conditions

Transport shall not take place under icy conditions (unless the roads have been plowed and sanded) or when visibility is seriously impaired by fog, rain, snow, or dust (less than one mile visibility).

4.3.6 Frequency of Use and Milage Limitations

There are no frequency of use or mileage restrictions on the Doorstop Sample Carrier System.

4.3.7 Escort and Emergency Response

Compliance with the requirements of WHC-CM-4-1, *Emergency Plan*, is the responsibility of the shipper.

4.3.8 Exclusive Use

The transport vehicle shall not carry any other packagings containing hazardous material during the Doorstop Sample Carrier System(s) transfer.

5.0 ACCEPTANCE OF PACKAGING FOR USAGE

5.1 NEW PACKAGE ACCEPTANCE TESTING

Acceptance testing and inspections are required to evaluate the performance of the Doorstop Sample Carrier System per the requirements of this SARP.

The following are the inspection and testing requirements for the new packaging. Specific procedures shall be written by the user and approved by Packaging Engineering, prior to use, to ensure the packaging is not damaged during inspection and testing operations.

All newly fabricated Doorstop Sample Carrier System components shall be inspected and tested per the following requirements prior to first use in the field.

5.1.1 Acceptance Requirements

Fabrication acceptance requirements for the Doorstop Sample Carrier System are based upon the THI and Quality Level (QL) of the component to be inspected or tested. QL A-3 and B-3 components or activities as defined in Part A, Section 7.0, are important to safety and require proper documentation if they are not inspected or tested as required by this section.

5.1.2 Inspection and Testing

The following inspections and testing shall be performed on newly fabricated Doorstop Sample Carrier System components. QL A-3 components are considered important to safety, and the inspections and testing shall be documented and maintained per Part A, Section 5.1.3. QL A-3 testing and inspection requirements are shown in Table A5-1.

Table A5-1. Quality Level A-3 Fabrication Testing and Inspections.

Component test/inspection	Acceptance requirements
Doorstop container	Meets all the dimensions, materials and fabrication requirements of the drawings (Part A, Section 10.1)
Doorstop Sample Carrier System assembly test	Each component is placed inside the respective component and closes and functions properly (i.e., Doorstop inside Doorstop Container, inside DOT 208-L drum, inside N-55 overpack)
Shielding 100% lead gamma scan	No deficiencies that would reduce the effective shielding thickness by 10% or more
Doorstop container leak test	Meets ANSI N14.5 leaktight leak rate of 5.81×10^{-5} std-cc/s

ANSI = American National Standards Institute.
WHC = Westinghouse Hanford Company.
ANSI, 1987, American National Standard for Radioactive Materials - Leakage Tests on Packages for Shipment, ANSI N14.5 American National Standards Institute, Inc., New York, New York.

QL B-3 component fabrication inspections and tests are required to be performed as shown in Table A5-2. QL B-3 components are considered important to safety, and the inspections and testing shall be documented and maintained per Part A, Section 5.1.3.

Table A5-2. Quality Level B-3 Fabrication Inspections and Tests.

Component inspection/test	Acceptance requirements
Lifting fixture load test	Hanford Site Hoisting and Rigging Manual (RL 1993)
DOT 208-L drum visual inspection	Per N-55 Overpack SARP drawing and requirements
N-55 overpack visual inspection	Per N-55 Overpack SARP drawings and requirements
Lifting fixture visual inspection	Meets drawing material and fabrication requirements

SARP = Safety Analysis Report for Packaging.
RL, 1993, Hanford Site Hoisting and Rigging Manual, DOE/RL-92-36, Rev. 0, U.S. Department of Energy, Richland Operations Office, Richland, Washington.

QL C-3 component fabrication inspections and tests are required to be performed as shown in Table A5-3. QL C-3 activities are not considered important to safety.

Table A5-3. Quality Level C-3 Fabrication Tests and Inspections.

Component inspection/test	Acceptance Requirements
Doorstop sample carrier visual inspection	Drawing material and fabrication requirements
Tiedown straps	Meet purchase requisition requirements
Overpack gasket	Meets N-55 overpack drawing requirements

5.1.3 Documentation

Acceptance testing and inspection verification and results shall be documented with QC periodic verification of the documentation and maintained for the life of the package or five years, whichever is longer.

5.2 PACKAGING FOR REUSE

The following applies to the Doorstop Sample Carrier System components that have previously been used to transport radioactive materials.

5.2.1 Acceptance Requirements

Acceptance requirements for the reuse of the Doorstop Sample Carrier System are based upon the QL of the component to be inspected or tested. QL A-3 activities are considered important to safety, and the inspections and testing shall be documented and maintained per Part A, Section 5.1.3. QL A-3

components or activities, as defined in Part A, Section 7.0, are important to safety and require proper documentation if they are not inspected or tested as required by this section.

5.2.2 Inspection and Testing

Each of the following inspections shall be performed prior to reuse of any or all of the Doorstop Sample Carrier System components. The inspections are based on the QL of the component. QL A-3 component inspections are shown in Table A5-4.

Table A5-4. Quality Level A-3 Component Inspections.

Component/inspection	Acceptance criteria
Doorstop container cleaned and decontaminated	Table A4-1 limits
Doorstop container visual inspection	No weld degradation. No dents or damage to the container that could affect the containment of the packaging
Doorstop container O-ring visual inspection	Replace if signs of aging, cracking, hardening or stretching are present
Doorstop container sealing surface	No visible scratches

QL B-3 component inspections are listed in Table A5-5. QL B-3 activities are considered important to safety, and the inspections and testing shall be documented and maintained per Part A, Section 5.1.3.

Table A5-5. Quality Level B-3 Component Inspections.

Component inspection	Acceptance requirements
N-55 overpack decontamination and visual inspection	Table A4-1 decontamination limits and no signs of weld degradation, loss of rivets, large dents (greater than 1/4 of each overpack half), or visible foam
DOT 208-L drum decontamination and visual inspection	Table A4-1 decontamination limits and no signs of weld degradation or dents in the drum that prevent proper closure of the lid
Lifting fixtures visual inspection	No signs of weld degradation

DOT = U.S. Department of Transportation.

QL C-3 component inspections are listed in Table A5-6. QL C-3 activities are not considered important to safety.

Table A5-6. Quality Level C-3 Component Inspections.

Component inspection	Acceptance requirements
N-55 overpack gasket visual inspection	Replace if signs of aging, cracking, hardening, or stretching are present
Tiedown straps visual inspection	Replace if signs of fraying or breaking are present
Doorstop sample carrier visual inspection	No weld degradation. No dents or damage to the container that could affect the containment of the packaging

5.2.3 Documentation

All inspections shall be documented in procedures and/or inspection checklists, and the documentation shall be periodically reviewed by QC. The documentation shall be maintained for the life of the package or five years, whichever is longer.

6.0 OPERATING REQUIREMENTS

6.1 GENERAL REQUIREMENTS

The following are requirements for the use of the Doorstop Sample Carrier System. Prior to use, specific operating procedures shall be written by the user and approved in accordance with WHC-CM-2-14. Items or activities labeled as QL A-3 and B-3 shall be considered "important to safety" for purposes of this SARP and shall be followed as written in this SARP. Modification of QL A-3 and B-3 steps will require an engineering change notice and unresolved safety question screening.

6.2 LOADING PACKAGE

The Doorstop Sample Carrier System operational requirements are implemented in detailed plant operating procedures.

6.2.1 Lead Pak Cylinder

Samples are loaded in vials and placed into the lead pak cylinders, packaged in slip lid or food pack cans, and loaded into the Doorstop container as follows:

1. Load the sample in a vial with a screw-on lid and place it inside a plastic bag. (QL C-3)

2. Place the bagged sample inside the lead pak cylinder. (QL C-3)

3. Prepare the slip lid or food pack can by placing a cylinder made from three layers of 0.159-cm- (0.625-in.-) thick lead wrap-around inside the can. Place three disk-shaped layers of 0.159-cm- (0.625-in.-) thick lead wrap on the bottom of the can. Prepare three disk-shaped layers of 0.159-cm- (0.625-in.-) thick lead wrap for placement within the top portion of the can. (QL B-3)

4. Place the lead pak cylinder inside the lead wrap in the can. Place three lead disks inside the can over the leak pak cylinder. (QL B-3)

5. The slip lid can shall be taped shut and placed inside the Doorstop container. The food pack can shall be sealed and placed inside the Doorstop container. (QL C-3)

6. The Doorstop container lid, with gasket in place, shall be firmly hand tightened. (QL A-3)

6.2.2 Bottled Samples in Can

Samples loaded in bottles and packed in slip lid, food pack or paint cans loaded into in the Doorstop container shall be loaded as follows:

1. The sample shall be loaded in a polyethylene or glass bottle (maximum 125 mL). The bottle shall be sealed with a polyethylene or Teflon[4] lined cap. The bottle shall be double bagged in plastic bags that are heat sealed and/or taped shut. (QL C-3)

2. The bagged sample bottle shall be placed inside a slip lid, food pack can, or paint can filled with non-cellulosic inert absorbent. The absorbent material shall be capable of absorbing twice the contents of the bottle. (QL B-3)

3. Close the can by taping shut the slip lid, sealing the food pack lid, or tamping closed the paint can lid. Place the can inside the Doorstop container. (QL A-3)

4. The Doorstop container lid, with the gasket in place, shall be firmly hand-tightened. (QL A-3)

6.2.3 Doorstop Sample Carrier

Samples loaded in stainless steel or lead-lined Doorstop sample carriers packaged in the Doorstop container shall be loaded as follows:

1. Samples contained in pipette tips shall be placed into the plastic insert-lined Doorstop sample carrier cavity. (QL C-3)

2. The lead plug, containing the gasket, shall be lowered into the Doorstop sample carrier cavity. (QL B-3)

3. The Doorstop sample carrier yoke shall be positioned over the plug and firmly hand tightened. (QL C-3)

4. Doorstop sample carriers shall be placed in the Doorstop container with absorbent material placed on top of the Doorstop to absorb any liquid in the event of a spill. (QL B-3)

5. The Doorstop container lid, with gasket in place, shall be firmly hand tightened. (QL A-3)

6.2.4 Doorstop Container

The three above Doorstop container configurations shall be loaded into the drum and overpack as follows:

1. Position the bottom and middle sections of beadboard filler inside the DOT 208-L drum. (QL B-3)

2. Position up to seven stainless steel Doorstop containers inside the seven compartments within the beadboard. (QL B-3)

---

[4]Teflon is a trademark of E. I. du Pont de Nemours and Company.

3. Place the third section of beadboard on top of the Doorstop containers. (QL B-3)

4. Place drum lid containing a gasket, lock ring, and bolt on the drum. (QL B-3)

5. Torque the lock ring bolt to 54 ± 5 Nm (40 ± 5 ft-lb) while hammer tapping the lock ring using a rubber or leather mallet to assure an adequate seal. (QL B-3)

6.2.5 N-55 Overpack

1. With the drum inside the bottom half of the N-55 overpack, position the top half of the N-55 overpack on the bottom half. (QL B-3)

2. Secure the top half of the N-55 overpack to the bottom half by fastening the four toggle clamps (barrel pins). This shall be done by adjusting the "T" bar on the clamps such that the clamps may be closed with minimum force. Reopen the clamps, and rotate the "T" bar on all four clamps two full 360° turns clockwise. Then close the clamps (Part B, Section 7.6.2). (QL B-3)

3. Verify that radiation dose rates do not exceed the following limits: 2 mSv/h (200 mrem/h) on the exterior surface of the N-55 overpack, 2 mSv/h (200 mrem/h) at the vehicle edge, 0.1 mSv/h (10 mrem/h) at 2 m (7 ft) from the vehicle edge, and 0.02 mSv/h (2 mrem/h) at any normally occupied space (driver location), unless the worker is a qualified Hanford Site radiological worker in which case the limits is 0.05 mSv/h (5 mrem/h). If dose rates exceed the limits, follow procedures given in Part A, Section 6.5.

4. Removable contamination on external surfaces of the Doorstop Sample Carrier System shall not exceed Table A4-1 values. (QL A-3)

5. Attach a tamper-indicating seal to the N-55 overpack to provide evidence that the package has not been opened by unauthorized persons. (QL C-3)

6. If it is not already in place, attach the lifting and tiedown yoke to the top of the N-55 overpack. Place the tiedown straps on tiedown yoke and frame. Carefully tension the straps between the yoke and the transporter frame to ensure even tension on all four straps. (QL B-3)

7. Label the N-55 overpack per 49 CFR 172 and mark per 49 CFR 173. (QL C-3)

NOTE: Ensure time limits in Part A, Section 4.3.3 are not exceeded.

6.2.6 Lifting

All Doorstop Sample Carrier System lifting operations, procedures, and equipment shall conform to the requirements of DOE-RL-92-36, *Hanford Site Hoisting and Rigging Manual* (RL 1993).

6.2.7 Installation of Package onto Transport Vehicle

1. Transfer the Doorstop Sample Carrier System to the transport vehicle using appropriate lifting technique from Part B, Section 7.6.1.2.1. (QL B-3)

2. Tiedown package to truck. (QL C-3)

3. Ensure Doorstop Sample Carrier System is conspicuously and durably marked as required by DOT regulations. (QL C-3)

6.3 RECEIPT OF PACKAGE

The Doorstop Sample Carrier System shall be received by the receiving facility and transferred into the facility using proper Plant Operating Procedures.

6.3.1 Off-Loading

1. Survey the N-55 overpack prior to opening to ensure removable contamination on external surfaces of the N-55 overpack does not exceed Table A4-1 limits. (QL A-3)

2. Verify the integrity of the tamper-indicating seal on the N-55 overpack. (QL B-3)

3. Remove the tiedowns and unlock the toggle clamps on the N-55 overpack. (QL C-3)

4. Remove top half of the N-55 overpack. (QL C-3)

5. Remove the DOT 208-L drum lid and the top inner spacer. (QL C-3)

6. Survey the DOT 208-L drum lid and top inner spacer prior to removing the Doorstop Container(s) to ensure a contamination spread will not occur while removing the shipping container. (QL A-3)

7. Remove the Doorstop Container(s) from the drum. (QL A-3)

8. Doorstop sample carriers, slip lid, food pack, or paint cans shall not be removed from the Doorstop containers outside of the buildings. (QL A-3)

CAUTION: THE DOORSTOP CONTAINER MAY BE PRESSURIZED DUE TO THE BUILDUP OF HYDROGEN AND OTHER GASES.

6.4 EMPTY PACKAGE (PACKAGING)

Empty packages shall be prepared for transport per 49 CFR 173.427 or 49 CFR 173.428 (1995 version) under the conditions that the smearable internal contamination levels and the smearable external contaminations levels are acceptable per 49 CFR 173.443 (see Table A4-1). Otherwise, the package shall be reassembled and transported per Part A, Sections 6.2 and 6.3.

6.5 EXCESSIVE DOSE RATE TRANSPORT

When the dose rates are in excess of 2 mSv/h (200 mrem/h) on the surface of the package or any other limits given in Part A, Section 4.3.2, perform the following for transport.

1. Shield driver such that dose rates in the cab do not exceed 0.05 mSv/h (5 mrem/h) if the driver is a qualified radiological worker; otherwise 0.02 mSv/h (2 mrem/h). (QL A-3)

2. Shield package if dose rates at the edge of the transport vehicle exceed 2 mSv/h (200 mrem/h) or one greater than 0.1 mSv/h (10 mrem/h) at 2 m (7 ft) from vehicle edge. (QL A-3)

3. Ensure that the dose rate at the accessible package surface is less than 10 mSv/h (1000 mrem/h). Dose rate may be reduced physically. (QL A-3)

This page intentionally left blank.

7.0 QUALITY ASSURANCE REQUIREMENTS

7.1 INTRODUCTION

This section describes the QA requirements for the procurement, fabrication, operation, and maintenance of the Doorstop Sample Carrier System. The design and fabrication of the N-55 overpack was performed by NuPac following their 10 CFR 71, Subpart H Certification and those guidelines similar to those detailed below. The Doorstop Sample Carrier System components fabricated by Westinghouse Hanford Company (WHC) were programmatically controlled by WHC-CM-4-2, *Quality Assurance Manual*. The format and requirements for procurement, fabrication, operation, and maintenance were taken from WHC-CM-4-2; WHC-IP-0705 (WHC 1995); WHC-CM-2-14; and 10 CFR 71, Subpart H.

7.2 GENERAL REQUIREMENTS

These requirements apply to activities, such as packaging, fabrication, repair, operation and maintenance which could affect the quality of the Doorstop Sample Carrier System and associated hardware. The overall Doorstop Sample Carrier System is classified per the WHC-CM-2-14 as a THI 3.

THI 3 packaging systems defined in WHC-CM-2-14 represents the third highest level of hazard for the contents. A packaging system assigned this level must be capable of mitigating a release less than 5 mSv (0.5 rem) and greater than 0.1 mSv (0.01 rem) beyond the Hanford site boundaries from either a normal or accident condition of transport.

Each THI contains a QL designator consisting of two parts, an alpha designator with a numerical designator. The alpha designator assigns the fabrication, testing, use, maintenance standards and quality requirements for each item, component, or activity of the packaging system. The numeric designator following the letter is the THI number of the packaging system. The following are definitions and requirements for each Doorstop Sample Carrier System item, component, or activity.

Quality Level A-3: Critical impact on safety and associated functional requirements: items or components whose failure or malfunction could directly result in an unacceptable condition of containment or confinement, shielding, or nuclear criticality.

This QL refers to the Doorstop container containment boundary and shielding. The requirements for fabrication, operations, and maintenance shall comply with the requirements of the following: American Institute of Steel Construction (AISC), American Welding Society (AWS), international or national standards, or operational and maintenance requirements with minimum fabrication leak test requirements of 5.81×10^{-5} std-cc/s, air.

Material required to be on hand for fabrication are ASTM or military specification materials with certificates of conformance from the Sellers.

Any procurement of items shall be from a supplier with an approved QA program in accordance with, or equivalent to, appropriate basic requirements and supplements of ASME NQA-1. QA procurement clauses shall be imposed as applicable to ensure product quality. Specific requirements to be developed by the packaging Quality Assurance engineer and Packaging Engineering cognizant engineer.

Quality Level B-3: Major impact on safety and associated functional requirements: items or components whose failure or malfunction could indirectly result in an unacceptable condition of containment or confinement, shielding, or nuclear criticality. An unsafe condition could result only if the failure of this item or subsystem occurred in conjunction with the failure of other items or subsystem in A-3 or this level.

This QL refers to the N-55 overpack, DOT 208-L drum closure and lifting fixtures. The requirements for fabrication, operation and maintenance shall comply with the requirements of the following: AISC, AWS, international or national standards, or operational and maintenance requirements with fabrication leakage rate requirements of 10^{-1} atm-cc/s, air.

Materials for fabrication require only the Seller's certificate of compliance.

Supplier QA programs shall be in accordance with, or equivalent to, appropriate basic and supplementary requirements of ASME NQA-1. QA procurement clauses shall be selectively imposed, as applicable, to ensure product quality. Specific requirements shall be developed by the responsible Packaging Engineering engineer with the assistance of the packaging Quality Assurance engineer.

Quality Level C-3: Minor impact on safety and associated functional requirements: items or components whose failure or malfunction would not reduce packaging effectiveness and would not result in an unacceptable condition of containment or confinement, shielding, or nuclear criticality, regardless of other failure in A-3, B-3 or this level.

This QL refers to the N-55 overpack gasket, tiedown system, Doorstop sample carrier, and all content containers. The requirements for fabrication, operation and maintenance shall comply with the following: AISC, AWS, international or national standards, or Flour Daniel Hanford, Inc. or Seller's prepared requirements media.

Supplier QA programs shall be in accordance with, or equivalent to, appropriate basic and supplementary requirements of ASME NQA-1. QA procurement clauses shall be selectively imposed, as applicable, to ensure product quality. Specific requirements shall be developed by the responsible Packaging Engineering engineer with the assistance of the packaging Quality Assurance engineer.

Each cognizant engineer involved with procurement, fabrication, use, or maintenance of the Doorstop Sample Carrier System components is responsible for assuring that the assigned tasks are performed in

accordance with controlling plans and procedures, which must in turn conform to the requirements of these QA requirements. Quality requirements for tasks are determined and documented in the plans and procedures used by the involved organizations.

Documentation and review requirements are based upon the QL of each component or activity. Changes or discoveries of non-compliance for all QL A-3 and B-3 components and activities shall be reviewed by the USQ screening process to ensure the quality and safety of the change or discovery. Changes to the SARP safety bases (contents, shielding, structural, containment, criticality) will require USQ screening regardless of QL.

7.3 ORGANIZATION

The organizational structure and the assignment of responsibility shall be such that quality is achieved and maintained by those who have been assigned responsibility for performing work. Quality achievement is to be verified by persons or organizations directly responsible for performing the work.

Packaging Engineering and the user operations engineering are responsible for the quality of the work performed by their respective organizations and for performing the following activities:

- Follow current requirements of this SARP, WHC-CM-4-2, and WHC-CM-2-14.
- Provide instructions for implementing QA requirements.

The responsible Quality Assurance organization is responsible for establishing and administering the applicable QA program, as stated in WHC-CM-4-2.

7.4 QUALITY ASSURANCE ACTIVITIES

7.4.1 Design Control

All engineering change notices to the packaging shall be approved by Packaging Engineering.

7.4.2 Procurement and Fabrication Control

Procurement and fabrication of Doorstop Sample Carrier System components shall be documented and controlled based on the quality level of the component. Requirements of WHC-CM-4-2 shall be followed as required by the assigned QL.

Table A7-1. Procurement and Fabrication Quality Levels.

Component	Quality Level
N-55 overpack	B-3
DOT 208-L drum	B-3
Doorstop container	A-3
Lifting attachments	B-3
Overpack gasket	C-3
DOT 208-L drum gasket	B-3
Doorstop sample carrier	C-3
Content containers	C-3
Tiedown attachments	C-3

7.4.3 Control of Operation/Processes

Processes affecting the quality of packaging items or services shall be controlled by instructions, procedures, drawings, checklists, or other appropriate means. These means shall ensure that process parameters are controlled with defined limits, and that specified environmental conditions are maintained. Methods for defining how process controls will be applied are defined in WHC-CM-4-2.

7.4.4 Control of Inspection and Testing

Fabrication and acceptance inspections shall be performed to the following guidelines.

7.4.4.1 Inspection Personnel. Inspection for acceptance shall be performed by cognizant facility QC personnel. Items fabricated by offsite suppliers will be inspected by Procurement Quality Assurance/QC personnel.

7.4.4.2 In-Process Inspection. Fabrication and acceptance inspections detailed in Part A, Section 5.1 are performed by cognizant facility QC personnel.

7.4.5 Control of Operations and Maintenance

Loading/unloading procedures shall be written by the user with appropriate reference to this SARP and will be used to ensure adequate loading, operation, and maintenance of packaging. The loading/unloading procedure identifies actions required by loading personnel to safely and properly load the Doorstop Sample Carrier System per this SARP. The loading/unloading procedures shall also identify which steps, as defined in this SARP (Part A, Section 6.0) are important to safety.

- Doorstop Sample Carrier Systems are properly assembled.

- All acceptance criteria (Part A, Section 5.0) is met for the use of a new package.
- Operational (Part A, Section 6.0) and maintenance procedures (Part A, Section 8.0) are properly completed.

QA verification shall be included for each QL A-3 and B-3 operation and maintenance activity as described in Part A, Sections 6.0 and 8.0.

7.4.5.1 Acceptance and Records. Acceptance of an activity shall be documented and approved by authorized facility QA/QC personnel per WHC-CM-4-2. Inspection documentation shall be maintained for the life of the package or five years, whichever is longer.

7.4.6 Test Control

These requirements apply to activities associated with the testing of the Doorstop Sample Carrier System and associated hardware involving QL A-3 or designated B-3 items. Testing shall be performed and documented per WHC-CM-4-2.

Tests required to verify conformance of package components to this SARP's requirements, and to demonstrate satisfactory performance for service shall be planned, performed, and documented. Characteristics to be tested and test methods to be employed shall be specified. Test results shall be documented, and their conformance with acceptance criteria shall be evaluated.

7.4.7 Control of Measuring and Test Equipment

The requirements for measuring and test equipment, contained in WHC-CM-4-2, apply to all equipment used to determine acceptability of Doorstop Sample Carrier System items, components, or activities, regardless of assigned QL.

7.4.8 Control of Nonconforming Items

Identification, documentation, evaluation and disposition of nonconforming items and activities shall be accomplished per WHC-CM-4-2, regardless of the assigned QL.

Items procured or fabricated for the Doorstop Sample Carrier System or use in the package, shall be QC inspected prior to use for compliance with the purchase order, specification, and/or fabrication drawing. The cognizant engineer, with QA assistance, shall define the acceptance criteria.

7.4.9 Corrective Action

Nonconformance or conditions adverse to quality are evaluated as described in Part A, Section 7.4.8, and the need for corrective action is determined in accordance with WHC-CM-4-2.

7.4.10 Quality Assurance Records and Document Control

Records that furnish documentary evidence of quality shall be specified, prepared, and maintained per WHC-CM-4-2 and WHC-CM-3-5, *Document Control and Records Management Manual*. All documents used to perform and/or verify items or activities are controlled. Controlled documents include (but are not limited to) the following: drawings, specifications, purchase orders, plans and procedures to inspect and test, reports, quality verification reports, nonconformance reports, corrective action reports, the SARP, and operational and maintenance procedures.

7.4.11 Audits

Internal and external audit process are guided by, and shall be in accordance with WHC-CM-4-2.

7.5 SARP CONTROL SYSTEM

This SARP is a copy controlled supporting document to ensure that only up-to-date approved versions are used for transport. Any changes made to this SARP will be by engineering change notices, which are distributed to users through the Copy Control System and incorporated into the SARP.

Any review comment records produced during the initial release or subsequent changes will be on file with Packaging Engineering.

8.0 MAINTENANCE

8.1 GENERAL REQUIREMENTS

A maintenance program shall be followed to ensure the integrity of the N-55 overpacks, DOT 208-L drums, Doorstop containers, and Doorstop sample containers. Gaskets, toggle clamps, and other components necessary for the safe and easy operation of the packaging shall be given regular inspection and repaired or replaced as necessary.

8.2 MAINTENANCE REQUIREMENTS

Maintenance frequency and acceptance requirements are based upon the QL of the component or activity. QL A-3 and B-3 components or activities are considered important to safety. Should the maintenance not be performed for QL A-3 and/or B-3 components, proper safety review and documentation is required.

Maintenance required for QL A-3 components is shown in Table A8-1.

Table A8-1. Quality Level A-3 Maintenance Requirements.

Component/activity	Frequency	Acceptance requirements
Doorstop container leak test	Annually	ANSI N14.5 5.81 x 10^{-5} std-cc/s
Doorstop O-ring replacement	Annually	Meeting drawing requirements
Doorstop container visual inspection	Annually	Meets drawing material requirements. Threads or O-ring not damaged such that containment would be jeopardized

ANSI = American National Standards Institute.
QA = Quality Assurance.
WHC = Westinghouse Hanford Company.
ANSI, 1987, American National Standard for Radioactive Materials - Leakage Tests on Packages for Shipment, ANSI N14.5 American National Standards Institute, Inc.

Maintenance required for QL B-3 components is shown in Table A8-2.

Table A8-2. Quality Level B-3 Maintenance Requirements.

Component activity	Frequency	Acceptance requirements
DOT 208-L drum gasket replacement	Annually and/or as required	0.95 cm (⅜ in.) tubular NEOZAN[1] gasket
N-55 overpack gasket replacement	Annually and/or as required	Neoprene gasket material 0.64 cm (¼ in.) to 1.3 cm (½ in.) thick. Meet applicable N-55 overpack drawing requirements.
Lifting fixture load test	Annually	Hanford Site Hoisting and Rigging Manual (RL 1993)

[1]NEOZAN is a trademark of Self Industries.
RL, 1993, Hanford Site Hoisting and Rigging Manual, DOE/RL-92-36, Rev. 0, U.S. Department of Energy, Richland Operations Office, Richland, Washington.

Maintenance required for QL C-3 components is listed in Table A8-3.

Table A8-3. Quality Level C-3 Maintenance Requirements.

Component	Frequency	Acceptance requirements
Tiedown straps visual inspection	Annually	Replace if frayed or worn
Doorstop sample container visual inspection	Every 2 years	
N-55 overpack toggle clamps functional inspection (lubricate and visually inspect)	Annually	Replace if clamps are bent or damaged to the extent that proper latching would be impaired

8.3 DOCUMENTATION

Maintenance from Part A, Section 8.2, shall be documented in procedures and/or inspection checklists and verified by cognizant facility Quality Assurance/QC. Records of inspection and maintenance for the Doorstop Sample Carrier System shall be retained for the life of the packaging system or five years, whichever is longer.

9.0 REFERENCES

10 CFR 71, 1995, "Packaging and Transportation of Radioactive Materials," *Code of Federal Regulations*, as amended.

49 CFR 172, 1995, "Hazardous Materials Table, Special Provisions, Hazardous Materials Communications, Emergency Response Information, and Training Requirements," *Code of Federal Regulations*, as amended.

49 CFR 173, 1995, "Shippers--General Requirements for Shipments and Packagings," *Code of Federal Regulations*, as amended.

ANSI, 1987, *American National Standard for Radioactive Materials - Leakage Test on Packages for Shipment*, ANSI N14.5, American National Standards Institute, New York, New York.

ASME, 1994, *Quality Assurance Program Requirements for Nuclear Facilities*, ASME NQA-1, American Society for Mechanical Engineers, New York, New York.

ASME, 1995, *American Society of Mechanical Engineers Boiler and Pressure Vessel Code*, American Society of Mechanical Engineers, New York, New York.

NRC, 1991, *Fracture Toughness Criteria of Base Material for Ferritic Steel Shipping Cask Containment Vessels with a Maximum Wall Thickness of 4 Inches*, Regulatory Guide 7.11, U.S. Nuclear Regulatory Commission, Washington, D.C.

NRC, 1994, *U.S. Nuclear Regulatory Commission Certificate of Compliance for Radioactive Materials Packages*, Certificate Number 9070, Rev. 12, package identification number USA/9070/B(U), U.S. Nuclear Regulatory Commission, Washington, D.C., December 20, 1994.

RL, 1993, *Hanford Site Hoisting and Rigging Manual*, DOE-RL-92-36, U.S. Department of Energy, Richland Operations Office, Richland, Washington.

RL, 1994, *Hanford Site Radiological Control Manual*, HSRCM-1, U.S. Department of Energy, Richland Operations Office, Richland, Washington.

WHC-CM-2-14, *Hazardous Material Packaging and Shipping*, Westinghouse Hanford Company, Richland, Washington.

WHC-CM-4-2, *Quality Assurance Manual*, Westinghouse Hanford Company, Richland, Washington.

WHC-CM-6-1, *Standard Engineering Practices*, Westinghouse Hanford Company, Richland, Washington.

WHC, 1994, *Report on Equivalent Safety for Transportation and Packaging of Radioactive Materials*, WHC-SD-TP-RPT-001, Rev. 0, Westinghouse Hanford Company, Richland, Washington.

WHC, 1995, *Quality Assurance Program Plan for the Hazardous Materials Transportation and Packaging Program*, WHC-IP-0705, Westinghouse Hanford Company, Richland, Washington.

WHC, 1996, *Tank Waste Compositions and Atmospheric Dispersion Coefficients for Use in Safety Analysis Consequence Assessments*, WHC-SD-WM-SARR-016, Rev. 2, Westinghouse Hanford Company, Richland, Washington.

10.0 APPENDICES

10.1 DRAWINGS

This page intentionally left blank.

QTY	DESCRIPTION	MATL OR REF
X	1 DOOR STOP CONTAINER ASSY	
1	2 PIPE SIZE 6"SCH 40S SEAMLESS SEE NOTE 4	TP-304L SST ASTM-A312
1	3 COVER PLATE SEE NOTE 5	304L SST ASTM-A240
1	4 PLATE 6.38 D X ½ THK SEE NOTE 5	304L SST ASTM-A240
1	5 HANDLE ⅜ D ROD	304L SST ASTM-A276
2	6 BAR ¾ X ¾ X ⅜ THK	304L SST ASTM-A276
1	7 O-RING 5.1/10 X 5.1/2 O.D. X .139	PARKER 2-234 NO DURO-NEOPRENE

GENERAL NOTES

1. REMOVE ALL BURRS AND BREAK SHARP EDGES.
2. ALL MACHINED SURFACES SHALL BE 63 MAX FINISH UNLESS OTHERWISE SPECIFIED.
3. LEAK TEST PER MIL-STD-1516 USING PNEUMATIC TEST AT 5 PSIG WITH VISUAL LEAK DETECTION. CHECK WELDS AND O-RING SEALS ON PTS 2 & 3 USING TEST PLUG H-2-74777. ANY LEAK INDICATION IS UNACCEPTABLE.
4. MARK AS SPECIFIED IN ASTM A-312 PLUS HEAT NUMBER, CERTIFICATIONS REQUIRED.
5. CERTIFICATIONS OF MATERIAL REQUIRED.
6. STAMP ⅛ I.D. NUMBERS IN PT'S AND SIDE OF PT. NO. 1, PT'S 2, PT NO. 2 TO HAVE MATCHING NUMBERS IN CONSECUTIVE ORDER (101 2S, 102 ETC.)
7. PROVIDE A HIGBEE CUT (ELUNT START), REMOVE ENTIRE PARTIAL THREAD FORM, ALSO, ROUND THE CREST OF THE THREADS.
8. IDENTIFY PN 4 & PN 3 PER HS-25-0015 TYPE I WITH DWG NUMBER, PART NUMBER AND DWG REVISION NUMBER IN LOCATIONS INDICATED, USING ⅜" HIGH LETTERS.

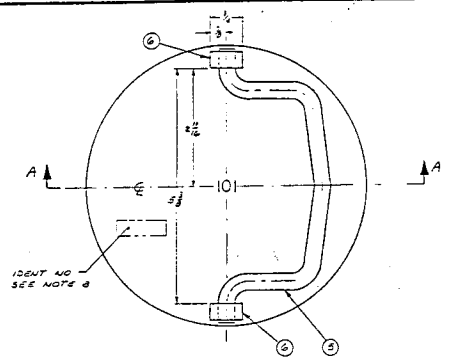

PLAN

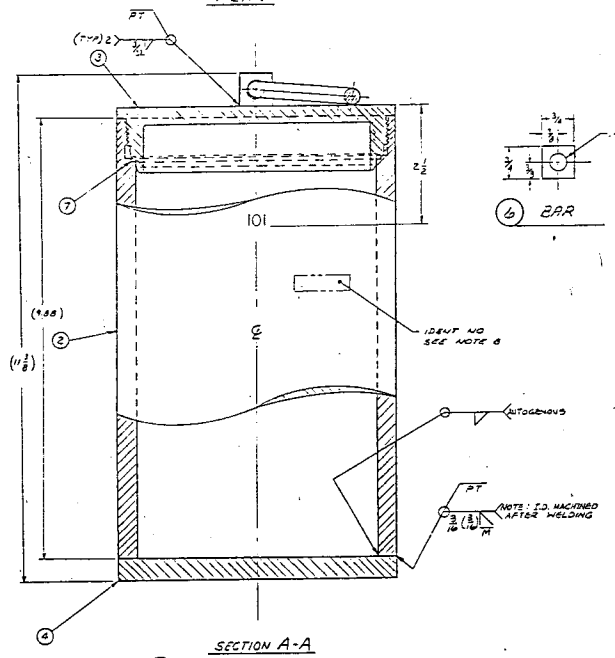

SECTION A-A

1 DOOR STOP CONTAINER ASSEMBLY

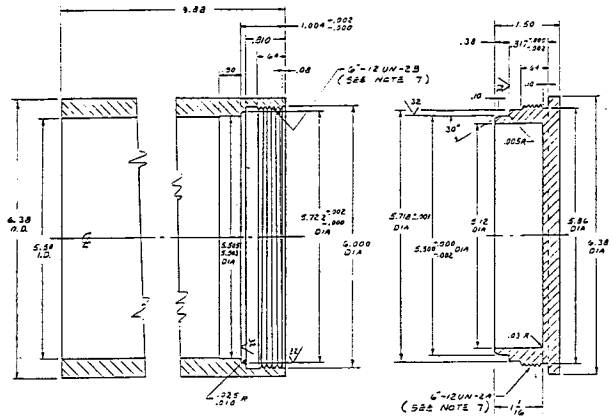

2 PIPE

3 COVER

4 BAR

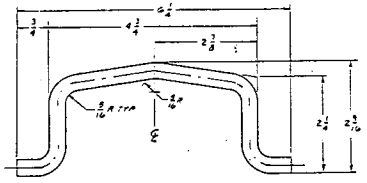

5 HANDLE

BEST AVAILABLE COPY

UNLESS OTHERWISE SPECIFIED DIMENSIONS ARE IN INCHES
TOLERANCES ON:
DECIMALS .XX ±.03 .XXX ±.005
ANGLES ±2°
FRACTION ±1/32
DO NOT SCALE PRINT

NOTE 8 WELD STAMP A) ADDED DI:8-3431 B) UPDATED DIA DWG CAGE REA INCORPORATED ECN-1089

IMPACT LEVEL 2

U.S. Department of Energy
Richland Operations Office
Rockwell Hanford Operations
Richland, Washington 99352

DOOR STOP CONTAINER

H-2-32510 DOOR STOP SAMPLE CARRIER
H-2-73010 V FRAME CART TIE DOWN FITTING ASSY
REFERENCE DRAWINGS
NEXT USED ON H-2-73010

DRAWING STATUS 3-18-80:B

SIZE A | FULL | 221-B | 3402
NONE | PROJECT RECORD | H-2-73008 | 1 | 1

THIS PAGE INTENTIONALLY
LEFT BLANK

QTY	NO	DESCRIPTION	MATERIAL
	1	TIE DOWN FRAME ASSY	
AR	2	L8 1/2 X 2 1/2 X 7/8	C.S. ASTM-A36
AR	3	BAR 2 1/2 X 7/8	
16	4	GUSSET 1/4 PL	
8	5	TIE DOWN LOOP 1/2 Ø ROD	

NOTES:
1. PAINT TIE DOWN FRAME WITH PHENOLINE 305 APPLIED PER MANUFACTURERS RECOMMENDATION. FINAL COLOR TO BE GRAY.
2. MARK PT#1 WITH THE DWG NO., PART NO. AND REV NO., BY PAINTING 1" HIGH CHARACTERS WITH AMERCOAT #33 OR EQUAL, COLOR TO BE YELLOW, LOCATION AS SHOWN.

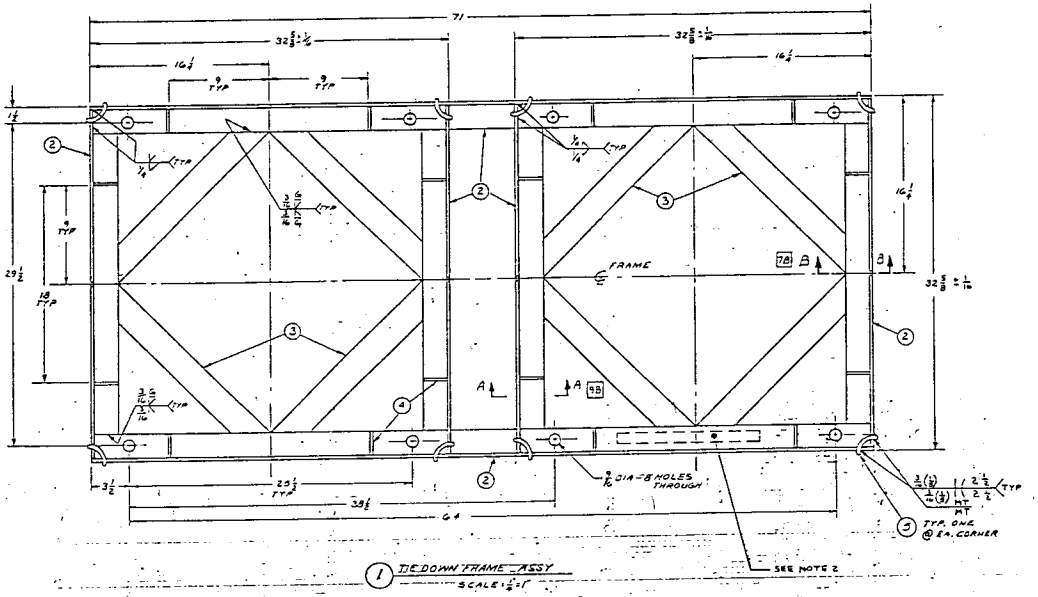

1 TIE DOWN FRAME ASSY
SCALE: 1/2"=1'

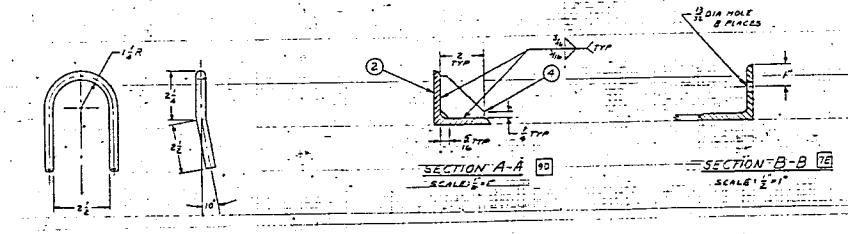

5 SCALE: 1"=1'

WELDING AND INSPECTION REQUIREMENTS

1. WELDING STANDARDS	☐ AWS ☐ CODE	☒ MIN. 211-1 ☒ HWS-110033-OPTIONAL (IN HOUSE)
2. PROCEDURE SPEC. & PROCEDURE QUAL.	☒ AWS SECTION IX	☐
3. FILLER MATERIAL	☒ AWS ANSI/AWS A5.18	☐
4. PREHEAT MIN.	☐ WELDING SPECIFICATION	☒ SPP 2.2.0 C (IN HOUSE)
5. INTERPASS MIN.	☐ WELDING SPECIFICATION	☒ SPP 2.2.0 C (IN HOUSE)
6. POSTHEAT MIN.	☐ WELDING SPECIFICATION	☐
7. NDE PROCEDURE NUM.	☐ WELDING SPECIFICATION	☐
8. RADIOGRAPHIC NUM.	☐ WELDING SPECIFICATION	☐
9. LOAD TEST NUM.	☐	☐

☒ OTHER PARTS PT - FINAL PASS ONLY

BEST AVAILABLE COPY

UNLESS OTHERWISE SPECIFIED DIMENSIONS ARE IN INCHES
TOLERANCES ON:
DECIMALS — ANGLES ± 2° FRACTION ± 1/8
DO NOT SCALE PRINT

QUALITY ASSURANCE LEVEL II

U. S. Department of Energy
Richland Operations Office
Rockwell Hanford Operations
Richland, Washington 99352

TRANSPORT CONTAINER
TIE DOWN FRAME

SCALE	SHOWN	22I-B	3902
WT.	NONE	H-2-73009	1 1

ECN 3922 RELEASED FOR USE
D.L. B-0128
#3 WAS 14.15 Lbs PER FT. CHANGED THK OF PART #3 FROM 1/4 TO 5/16 & WAS 5/16 IS 3/8 CHANGED #4 & #5 WAS 10.15 2.3# CHANGED DEM. & MILL. CLEAR. IN SH 60 & SH 90 & SH 4F-2 & SH 20 CORRECTED WELDS SH 2, SH 3E, NEW WELD SYMBOL ON SH 3 & SH 4 ADDED NOTE 7 ADDED NEXT USED ON DWG.

DRAWING STATUS D.L.-B-0015
PRINT USED ON H-2-73105 thru H-2-74914

THIS PAGE INTENTIONALLY
LEFT BLANK

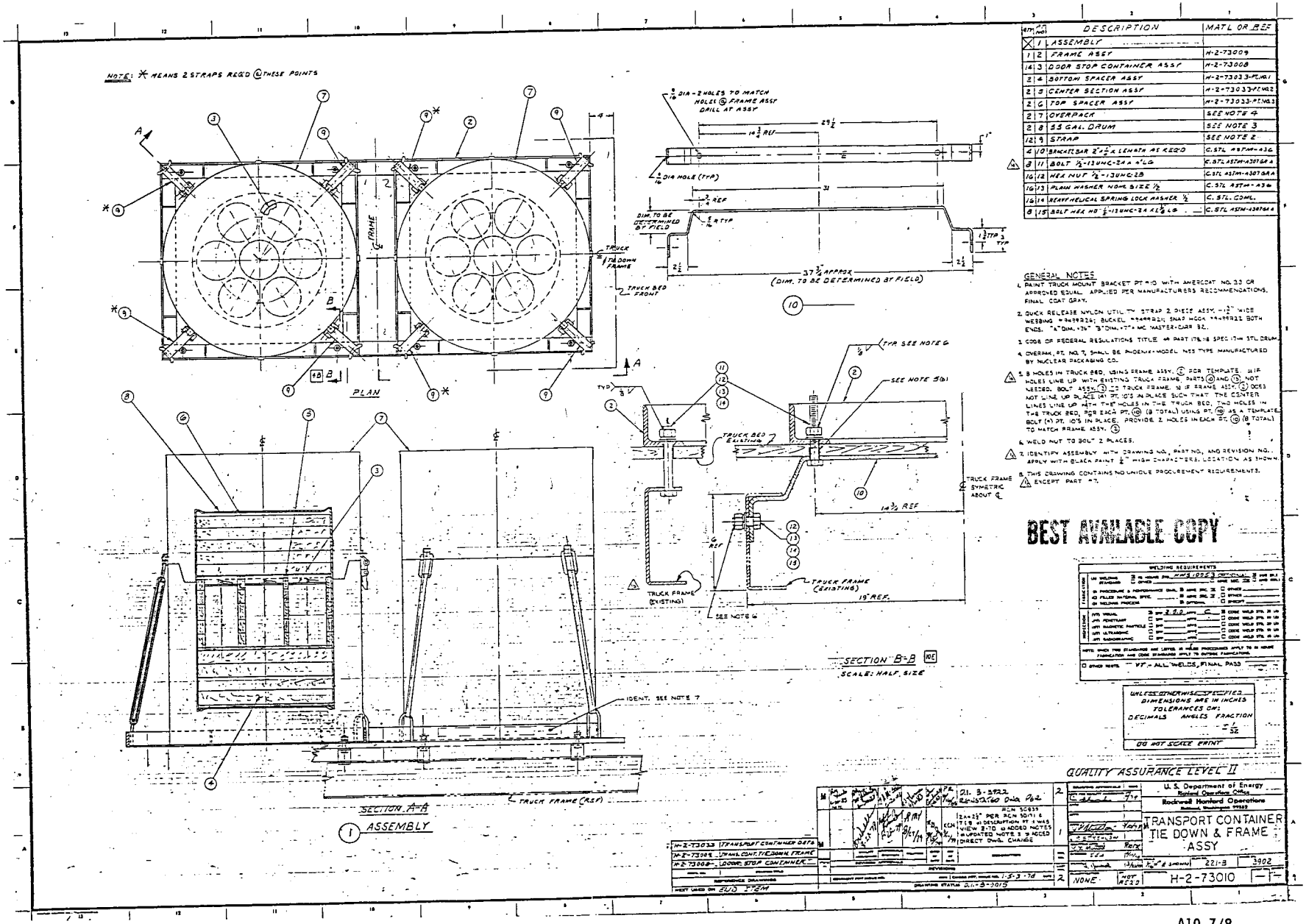

ITEM	QTY REQ'D	DESCRIPTION	MATL OR REF
X	1	ASSEMBLY	
1	2	FRAME ASSY	H-2-73009
14	3	DOOR STOP CONTAINER ASSY	H-2-73008
2	4	BOTTOM SPACER ASSY	H-2-73033-PT.NO.1
2	5	CENTER SECTION ASSY	H-2-73033-PT.NO.2
2	6	TOP SPACER ASSY	H-2-73033-PT.NO.3
2	7	OVERPACK	SEE NOTE 4
2	8	55 GAL. DRUM	SEE NOTE 3
12	9	STRAP	SEE NOTE 2
4	10	BRACKET BAR 2"x½" x LENGTH AS REQ'D	C. STL ASTM-A36
8	11	BOLT ½-13 UNC-2A x 4" LG	C. STL ASTM-A307 GR A
16	12	HEX NUT ½-13 UNC-2B	C. STL ASTM-A307 GR A
16	13	PLAIN WASHER NOM. SIZE ½	C. STL ASTM-A36
16	14	HEAVY HELICAL SPRING LOCK WASHER ½	C. STL. COMM.
8	15	BOLT HEX HD ½-13 UNC-2A x 1½ LG	C. STL ASTM-A307 GR A

GENERAL NOTES

1. PAINT TRUCK MOUNT BRACKET PT # 10 WITH AMERCOAT NO. 33 OR APPROVED EQUAL. APPLIED PER MANUFACTURERS RECOMMENDATIONS. FINAL COAT GRAY.
2. QUICK RELEASE NYLON UTILITY STRAP 2 PIECE ASSY, 1½" WIDE WEBBING # 9439226; BUCKEL #9449821; SNAP HOOK #9449822 BOTH ENDS. "A" DIM. +3% "B" DIM. +0% MC MASTER-CARR 32.
3. CODE OF FEDERAL REGULATIONS TITLE 49 PART 178.118 SPEC 17H STL DRUM.
4. OVERPAK, PT. NO. 7, SHALL BE PHOENIX MODEL NES TYPE MANUFACTURED BY NUCLEAR PACKAGING CO.
5. Ⓐ B HOLES IN TRUCK BED, USING FRAME ASSY. ② FOR TEMPLATE, IF HOLES LINE UP WITH EXISTING TRUCK FRAME PARTS ⑩ AND ⑮ NOT NEEDED. BOLT 4 EA ⑪ TO TRUCK FRAME. Ⓑ IF FRAME ASSY ② DOES NOT LINE UP PLACE (4) PT. 10'S IN PLACE SUCH THAT THE CENTER LINES LINE UP WITH THE HOLES IN THE TRUCK BED, TWO HOLES IN THE TRUCK BED, FOR EACH PT. ⑩ (8 TOTAL) USING PT. ⑩ AS A TEMPLATE. BOLT (4) PT. 10'S IN PLACE. PROVIDE 2 HOLES IN EACH PT. ⑩ (8 TOTAL) TO MATCH FRAME ASSY. ②
6. WELD NUT TO BOLT 2 PLACES.
7. IDENTIFY ASSEMBLY WITH DRAWING NO., PART NO., AND REVISION NO. APPLY WITH BLACK PAINT ½" HIGH CHARACTERS, LOCATION AS SHOWN EXCEPT PART #7.
8. THIS DRAWING CONTAINS NO UNIQUE PROCUREMENT REQUIREMENTS.

BEST AVAILABLE COPY

WELDING REQUIREMENTS

UNLESS OTHERWISE SPECIFIED DIMENSIONS ARE IN INCHES TOLERANCES OF: DECIMALS ANGLES FRACTION ± 1/32

DO NOT SCALE PRINT

QUALITY ASSURANCE LEVEL II

H-2-73033	TRANSPORT CONTAINER ASSY	21.3-3722 REVISED Date 7/22	
H-2-73009	UPPER CONT. TYE DOWN FRAME		
H-2-73008	DOOR STOP CONTAINER		

U. S. Department of Energy, Richland Operations Office, Rockwell Hanford Operations

TRANSPORT CONTAINER TIE DOWN & FRAME ASSY

SIZE	CODE IDENT NO.	DRAWING NO.	REV
D	3902	H-2-73010	

SCALE: ½" & AS SHOWN | 221-B | NONE | NOT REQ'D

THIS PAGE INTENTIONALLY
LEFT BLANK

QTY	QTY	QTY	PT NO	DESCRIPTION	MATL OR REF
		X	1	BOTTOM SPACER ASSY	
	X		2	CENTER SECTION ASSY	
X			3	TOP SPACER ASSY	
		1	4	DISK 22¼ DIA x ½" THK	MARINE GRADE PLY-WOOD
		4	5	EXPANDED POLYSTYRENE DISK	SEE NOTE #1 & 2
	1		6	PERFORATED DISK	MARINE GRADE PLY-WOOD
	5		7	EXP. POLYSTYRENE	SEE NOTE #1 & 2
5			8	EXP. POLYSTYRENE 2" THK	SEE NOTE #1 & 2
1		1	9	DISK 22¼ x ½" THK	MARINE GRADE PLY-WOOD
9/16	9/16	9/16	10	GLUE SEE NOTE #2	INSULSTIC #200
1			11	LUGGAGE STRAP 1" WIDTH x 72" LG	MCMASTER-CARR #4588K19

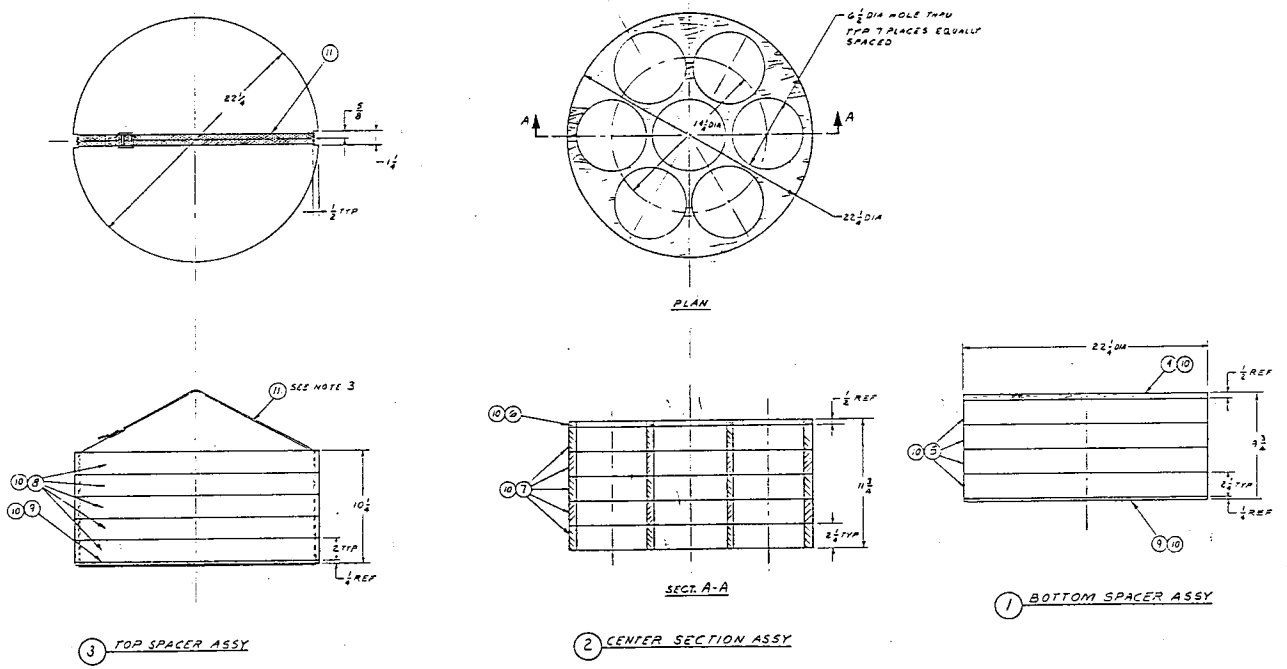

3 TOP SPACER ASSY

2 CENTER SECTION ASSY

1 BOTTOM SPACER ASSY

NOTES:

1. EXPANDED POLYSTYRENE BEAD BOARD, 1½#, TYPE 2 CLASS A #HWE524, WESTERN INSULFOAM
2. GLUE TOGETHER WITH INSULSTIC #200, WESTERN-INSULFOAM.
3. PT #11 IS NOT ATTACHED TO PT #9 & 8.

BEST AVAILABLE COPY

UNLESS OTHERWISE SPECIFIED DIMENSIONS ARE IN INCHES
TOLERANCES ON:
DECIMALS ANGLES FRACTION
±30' ±1/16
DO NOT SCALE PRINT

QUALITY ASSURANCE LEVEL II

U. S. Department of Energy
Richland Operations Office
Rockwell Hanford Operations
Richland, Washington 99352

TRANSPORT CONTAINER
SUB-ASSEMBLIES

QUARTER SIZE 221-B 3902

NONE NOT REQD

H-2-73033

H-2-73010 TRANS. CONT. TIE DOWN & FRAME ASSY

REFERENCE DRAWINGS

NEXT USED ON H-2-73010

REVISIONS

DRAWING STATUS D 1-3-0015

THIS PAGE INTENTIONALLY
LEFT BLANK

QTY -3	QTY -2	QTY -1	FIND NO.	PART NO.	NAME / DESCRIPTION	MATERIAL / SPECIFICATION	IMP LVL
		X	1	-1	ARRANGEMENT		II
	X	1	2	-2	ASSEMBLY		
X		4	3	-3	ASSEMBLY		
	1		4	-4	ROD	Ø 3/4" x 4 21/32" L ASTM A36 C.S.	
	4		5	-5	ROD	Ø 1/2" x 22 11/16" L T.O.E. x 1/2"-UNC-13 2A x 3 1/2" L ASTM A36 C.S.	
	4		6	6-277	EYE BOLT (MODIFIED)	1/2 x 6" x 2200# SHOULDER NUT CROSBY	
	8		7	-6	WASHER	FLAT 1/2" ASTM F436 TP3	
	8		8	-7	NUT	HEX 1/2"-13UNC-2B ASTM A563 GRB	
2			9	9499K22	SNAP HOOK	1 3/4" WIDTH "McMASTER CARR" CAT #89	
1			10	9499K21	BUCKLE	1 3/4" WIDTH "McMASTER CARR" CAT #89	
1			11	9499K24	QUICK DISCONNECT	1 3/4" WIDTH "McMASTER CARR" CAT #89	
1			12	9499K26	CORDURA WEBBING	1 3/4" WIDTH x 8'-6" LONG "McMASTER CARR" #89	
	8		13	-8	WASHER	LOCK 1/2" HELICAL SPRING COML CS.	
	AR		14	8622K24	RUBBER STRIPPING	SELF-STICK 2" WIDE x .030 THK. "McMASTER CARR" CAT #89	
	1		15	9	TUBE STEEL	3" x 2" x 1/4" x 39" L ASTM A500 GRB CS	
	2		16	10	TUBE STEEL	3" x 2" x 1/4" x 18 1/2" L ASTM A500 GRB CS	II

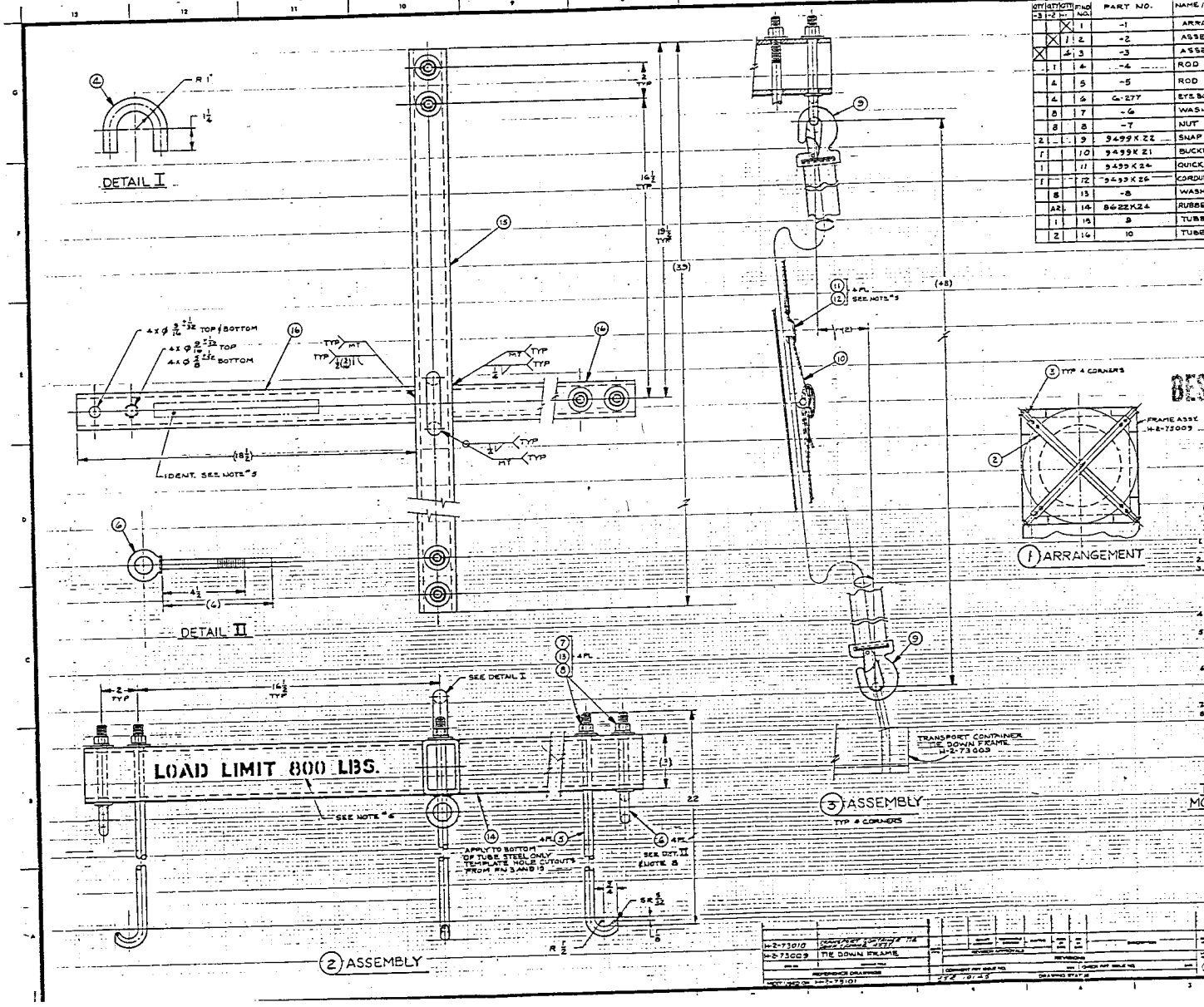

BEST AVAILABLE COPY

GENERAL NOTES:

1. WELD & INSPECT PER AWS D1.1, ALL WELDS, MT WELDS, FINAL PASS NOTED PRIOR TO AND AFTER LOAD TEST, AND PRIOR TO PAINTING.
2. REMOVE ALL BURRS AND BREAK SHARP EDGES.
3. PREPARE AND PAINT ALL CARBON STEEL SURFACES WITH ONE COAT OF AMERCOAT #157, PRIMER, AND TWO FINISH COATS OF AMERCOAT #33 PER MANUFACTURERS INSTRUCTIONS. FINAL COLOR TO BE GRAY, EXCEPT FOR (FN 4/5) WHICH FINAL COLOR SHALL BE YELLOW.
4. BEFORE PAINTING, LIFTING YOKE ASSEMBLY SHALL BE STATIC LOAD TESTED AT 1200 POUNDS FOR 10 MINUTES.
5. IDENTIFY ASSY. FN 1 PER HS-BS-0015, TYPE B, WITH DRAWING NUMBER AND FIND NO., PAINT WITH AMERCOAT #33 USING 1/2" HIGH BLACK CHARACTERS ON YELLOW BACKGROUND. IDENTIFY ASSY. FN 2 PER HS-BS-0015 TYPE F.
6. MARK ASSEMBLY IN LOCATION SHOWN PER HS-BS-0015, TYPE B, WITH "LOAD LIMIT 800 LBS." PAINT WITH AMERCOAT #33 USING 1" HIGH BLACK CHARACTERS ON YELLOW BACKGROUND.
7. EYE BOLTS (FN 6) TO BE ALIGNED AS SHOWN.
8. MACHINED SURFACES TO BE 250 MAX UNLESS OTHERWISE SPECIFIED.

THIS DRAWING MODIFIES H-2-73010

IMPACT LEVEL II

U. S. Department of Energy

YOKE-ARRANGEMENT N-55 LIFTING AND TIE DOWN

H-2-99129

H-2-73010	TRANSPORT CONTAINER TIE DOWN FRAME ASSY
H-2-73009	TIE DOWN FRAME

THIS PAGE INTENTIONALLY
LEFT BLANK

PART B: PACKAGE EVALUATION

1.0 INTRODUCTION

1.1 SAFETY EVALUATION METHODOLOGY

The safety of the Doorstop Sample Carrier System has been shown by drop test comparison and analysis to meet the intent of Title 10, *Code of Federal Regulations*, Part 71 (10 CFR 71) Type B packaging regulations for onsite requirements.

1.2 EVALUATION SUMMARY AND CONCLUSIONS

This evaluation compares the packaging's structural, thermal, containment, shielding, and criticality design features with the performance criteria found in 10 CFR 71 Type B packaging requirements. The criteria for design acceptance of a 10 CFR 71 Type B packaging are met for the Doorstop Sample Carrier System containing either liquid or solid contents. Additional operational requirements were developed to permit shipment of loads in which the radiation levels exceed normal operating levels. These controls establish an equivalent level of safety.

1.2.1 Contents

The allowable contents of the Doorstop Sample Carrier System are based upon the radionuclide table in Part B, Section 2.1. The maximum quantity of radioactive contents is 875 mL. The maximum is based on 125 mL per Doorstop container, seven Doorstop containers per N-55 overpack. The maximum expected source term corresponds to 5.0 A_2s, and the worst-case source term to 93 A_2s (see Part B, Section 2.1). The packaging system is limited to 0.74 TBq (20 Ci) of plutonium and 15 g of fissile material.

1.2.2 Radiological Risk

A radiological risk evaluation (Part B, Section 3.0) is not performed for the Doorstop Sample Carrier System because it has been demonstrated to meet the performance requirements of the U.S. Department of Transportation (DOT)/ U.S. Nuclear Regulatory Commission (NRC) for Type B packagings. Additional operational requirements were developed to permit shipment of loads in which the radiation levels exceed normal operating levels.

1.2.3 Containment

Containment is provided by the Doorstop container. An additional containment boundary is the DOT specification or performance-oriented 208-L (55-gal) drum (DOT 208-L drum). The containment boundary meets the requirements of the American National Standards Institute (ANSI) N14.5, *American National Standard for Radioactive Materials - Leakage Tests on Packages for Shipment* (ANSI 1987), with a leakage rate of less than or equal to 5.81×10^{-5} std-cc/s.

1.2.4 Shielding

Shielding is provided by the stainless steel Doorstop container and, at times, additional shielding is provided by stainless steel or lead-lined inserts. The external dose rate limits direct the amount of administrative controls required by operations. The source terms evaluated in the shielding section (Part B, Section 5.0) were conservatively developed to allow transport of samples from all onsite radioactive waste tanks. There are two source terms evaluated: one is the worst-case solid source term, and one is the maximum expected. For loads where the radiation levels exceed regulatory established limits for offsite shipment, additional operational limits are used to ensure worker safety. When needed, these limits are met through the use of shielding on the transport vehicle, external to the package.

1.2.5 Criticality

A criticality evaluation (Part B, Section 6.0) is not required for the Doorstop Sample Carrier System since the contents are limited to 15 g fissile. Packages containing 15 g or less of fissile material are exempt from fissile material classification and are not required to meet the fissile material standards or 10 CFR 71.55 and 71.59 (10 CFR 71.53).

1.2.6 Structural

It was determined through testing and analysis (Part B, Section 7.0) that the Doorstop Sample Carrier System meets 10 CFR 71 normal conditions of transport (NCT) and hypothetical accident conditions (HAC) design criteria.

The drop testing performed (Adkins 1995) demonstrates minor damage will occur from a 9-m (30-ft) or 1.2-m (4-ft) drop. A conservative evaluation determined that the Doorstop Sample Carrier System could receive a maximum of 190*g*s during a side drop. This was determined based on the condition of the N-55 overpack from a similar drop test. The containment of the Doorstop container is not compromised due to this maximum *g*-loading as shown by analysis (Part B, Section 7.0).

1.2.7 Thermal

The Doorstop container payload for the worst-case solid payload is 6.9×10^{-2} W. If the seven Doorstop containers in the Doorstop Sample Carrier

System were loaded to the maximum heat load, the value would be 4.9×10^{-1} W. This low thermal generation rate from the payload does not impose any significant heat into the thermal calculations. The calculations were performed assuming a worst-case 3-W payload per Doorstop container, and demonstrate that during both normal and accident conditions the Doorstop Sample Container System meets the acceptance criteria (Part B, Section 8.0).

1.2.8 Gas Generation

The maximum gas generation rate based on the worst-case source term creates a gas generation rate of 219 cc/h per 125-mL payload (Part B, Section 9.0). Operational limits that identify the maximum period the loaded Doorstop container should remain sealed are established for various loads. The limits are based on ensuring that the lower flammability limit is not exceeded.

1.2.9 Tiedown System

The tiedown system, when evaluated against the current 0.5*g* to working load limit, meets the requirements of 49 CFR 393 with positive margins of safety (Part B, Section 10.0). There are no tiedown devices that are a structural part of the package. Therefore, 10 CFR 71 and 49 CFR 173 tiedown requirements are not required to be met.

1.3 REFERENCES

10 CFR 71, 1995, "Packaging and Transportation of Radioactive Material," *Code of Federal Regulations*, as amended.

49 CFR 173, 1995, "Transportation," *Code of Federal Regulations*, as amended.

49 CFR 393, 1995, "Parts and Accessories for Safe Operation," *Code of Federal Regulations*, as amended.

Adkins, H. E., 1995, *Pig Shipping Container Test Report*, WHC-SD-TP-TR-002, Rev. 0, Westinghouse Hanford Company, Richland, Washington.

ANSI, 1987, *American National Standard for Radioactive Materials - Leakage Tests on Packages for Shipment*, ANSI N14.5, American National Standards Institute, New York, New York.

This page intentionally left blank.

2.0 CONTENTS EVALUATION

2.1 CHARACTERIZATION

The Doorstop Sample Carrier System will be used to transport liquid or solid tank waste samples. The solid tank waste radionuclide composition from WHC-SD-WM-SARR-016 (WHC 1996) bounds the liquid tank waste for all areas considered in this safety analysis report for packaging (SARP); i.e., shielding, dose consequence, thermal, gas generation, and criticality. Therefore, the Doorstop container source terms were established using the solid tank waste activity concentrations. The worst-case solid tank waste activity concentrations used to derive the source term are listed in Table B2-1.

The worst-case source term was developed by first determining the maximum activity concentration of each radionuclide using the existing sample data from all of the tanks. The maximum sample activity concentrations are documented in WHC-SD-WM-SARR-016 (WHC 1996). These activity concentrations were then assumed to exist in a single tank, thus creating a worst-case source term. Consequently, it is not possible to have a sample that contains all of the maximum radionuclide quantities because they are from several different tanks. Historically, the dose rates on the surface of the Doorstop Sample Carrier System have been less than 2 mSv/h (200 mrem/h). Therefore, a second, "maximum expected" source term was developed based on a 200-mrem/h dose rate at the N-55 overpack surface. Administrative controls are developed (Part A, Section 6.5) to allow transport up to the worst-case scenario, ensuring that all samples are transported according to WHC-CM-2-14, *Hazardous Material Packaging and Shipping*.

The shielding analysis (Part B, Section 5.0) indicated that 875 mL (29.6 oz) of the worst-case solid tank waste results in a maximum surface dose rate of 37 mSv/h (3700 mrem/h), which is a factor of 18.5 times greater than 2 mSv/h (200 mrem/h). The maximum expected source term was derived using the worst-case solid activity concentrations (Table B2-1) and reducing the total activity of each radionuclide to yield a surface dose rate of 2 mSv/h (200 mrem/h) for a 875-mL (29.6-oz) sample size. A scaling factor of 0.047 (875 mL x Table B2-1 Ci/L values/18.5) was applied to the activity concentrations from Table B2-1 to produce 2 mSv/h (200 mrem/h). The second source term corresponds to 875 mL (29.6 oz) of the worst-case solids source term. Both source terms are listed in Table B2-1.

The heat generation rate for 875 mL (29.6 oz) of the maximum expected source term is 2.6×10^{-2} W and for the 875 mL (29.6 oz) of the worst-case source term is 4.8×10^{-1} W as can be seen in the RADCALC output in Part B, Section 9.0. The maximum expected source term corresponds to 5.0 A_2s, and the worst-case source term contains 93 A_2s as shown in Table B2-1. Therefore, the package contains Type B quantities of radioactive material.

Table B2-1. Solid Tank Waste Source Terms for the Doorstop.

Nuclide	Worst-case solids activity concentration[e] (Ci/L)	A_2 (Ci)[a]	875 mL (29.6 oz) maximum expected[b] (Bq)	875 mL (29.6 oz) maximum expected[b] (Ci)	A_2s	875 mL (29.6 oz) worst case[c] (Bq)	875 mL (29.6 oz) worst case[c] (Ci)	A_2s
^{14}C	4.3 E-06	5.4 E+01	7.4 E+03	2.0 E-07	3.7 E-09	1.4 E+05	3.8 E-06	7.0 E-08
^{60}Co	1.3 E-02	1.1 E+01	2.3 E+07	6.1 E-04	5.7 E-05	4.1 E+08	1.1 E-02	1.0 E-03
^{79}Se	4.6 E-07	5.4 E+01	8.1 E+02	2.2 E-08	4.1 E-10	1.5 E+04	4.0 E-07	7.4 E-09
^{90}Sr	7.8 E+01	2.7 E+00	1.4 E+11	3.7 E+00	1.4 E+00	2.5 E+12	6.8 E+01	2.5 E+01
^{90}Y[f]	7.8 E+01	5.4 E+00	1.4 E+11	3.7 E+00	0.0	2.5 E+12	6.8 E+01	0.0
^{99}Tc	3.2 E-01	2.4 E+01	5.6 E+08	1.5 E-02	6.2 E-04	1.0 E+10	2.8 E-01	1.2 E-02
^{106}Ru	1.9 E-06	5.4 E+00	3.3 E+03	8.9 E-08	1.7 E-08	6.3 E+04	1.7 E-06	3.1 E-07
^{106}Rh[f]	1.9 E-06	0.0	3.3 E+03	8.9 E-08	0.0	6.3 E+04	1.7 E-06	0.0
^{125}Sb	4.9 E-03	2.4 E+01	8.5 E+06	2.3 E-04	9.5 E-06	1.6 E+08	4.3 E-03	1.8 E-04
^{129}I	1.7 E-04	Unlimited	3.0 E+05	8.0 E-06	0.0	5.6 E+06	1.5 E-04	0.0
^{134}Cs	2.5 E-04	1.4 E+01	4.4 E+05	1.2 E-05	8.9 E-07	8.1 E+06	2.2 E-04	1.6 E-05
^{137}Cs	2.7 E+00	1.4 E+01	4.8 E+09	1.3 E-01	9.6 E-03	8.9 E+10	2.4 E+00	1.8 E-01
^{137m}Ba[f]	2.6 E+00	0.0	4.4 E+09	1.2 E-01	0.0	8.5 E+10	2.3 E+00	0.0
^{144}Ce	9.2 E-09	5.4 E+00	1.6 E+01	4.3 E-10	8.0 E-11	3.0 E+02	8.1 E-09	1.5 E-09
^{144}Pr[f]	9.2 E-09	0.0	1.6 E+01	4.3 E-10	0.0	3.0 E+02	8.1 E-09	0.0
^{154}Eu	3.0 E-01	1.4 E+01	5.2 E+08	1.4 E-02	1.0 E-03	9.6 E+09	2.6 E-01	1.9 E-02
^{155}Eu	1.4 E-04	5.4 E+01	2.4 E+05	6.6 E-06	1.2 E-07	4.4 E+06	1.2 E-04	2.2 E-06
^{237}Np	2.7 E-02	5.4 E-03	4.8 E+07	1.3 E-03	2.4 E-01	8.9 E+08	2.4 E-02	4.4 E+00
^{238}Pu	5.1 E-03	5.4 E-03	8.9 E+06	2.4 E-04	4.4 E-02	1.7 E+08	4.5 E-03	8.3 E-01
^{239}Pu	4.3 E-02	5.4 E-03	7.4 E+07	2.0 E-03	3.7 E-01	1.4 E+09	3.8 E-02	7.0 E+00
^{240}Pu[d]	4.3 E-02	5.4 E-03	7.4 E+07	2.0 E-03	3.7 E-01	1.4 E+09	3.8 E-02	7.0 E+00
^{241}Pu	1.0 E-01	2.7 E-01	1.7 E+08	4.7 E-03	1.7 E-02	3.3 E+09	8.8 E-02	3.3 E-01
^{241}Am	3.0 E-01	5.4 E-03	5.2 E+08	1.4 E-02	2.6 E+00	9.6 E+09	2.6 E-01	4.8 E+01
^{242}Cm	5.4 E-09	2.7 E-01	9.3 E+00	2.5 E-10	9.3 E-10	1.7 E+02	4.7 E-09	1.7 E-08
^{244}Cm	1.6 E-03	1.1 E-02	2.8 E+06	7.5 E-05	6.9 E-03	5.2 E+07	1.4 E-03	1.3 E-01
Totals	1.6 E+02	----	2.9 E+11	7.7 E+00	5.0 E+00	5.3 E+12	1.4 E+02	9.3 E+01

[a] A_2 values taken from 49 CFR 173.435, 1995, "Shippers--General Requirements for Shipments and Packagings," Code of Federal Regulations, as amended.

[b] Maximum expected source term derived using the solid tank waste activity concentrations (Ci/L) and multiplying by the factor 0.047 such that the total Doorstop radioactive loading results in a dose rate less than 2 mSv/h (200 mrem/h) at the package surface.

[c] Worst-case source term assumes 875 mL (29.6 oz) of solid tank waste.

[d] ^{240}Pu conservatively set equal to ^{239}Pu.

[e] Values taken from WHC-SD-WM-SARR-016, Rev. 2 (WHC 1996). Daughters calculated using ORIGEN2.

[f] This radionuclide is a daughter as defined in 49 CFR 173.433; therefore, its activity was set to 0 for the A_2 calculations.

WHC, 1996, Tank Waste Compositions and Atmospheric Dispersion Coefficients for Use in Safety Analysis Consequence Assessments, WHC-SD-WM-SARR-016, Rev. 2, Westinghouse Hanford Company, Richland, Washington.

2.2 RESTRICTIONS

The Doorstop Sample Carrier System is limited to 875 mL (29.6 oz) of tank waste. The Doorstop container is limited to 125 mL (4.3 oz) of tank waste.

2.3 SIZE AND WEIGHT

The maximum weight of the Doorstop container contents (sample and container) is 14.5 kg (32 lb). The volumes normally found in the various configurations are identified in Table B2-1. Other volumes are permitted providing they do not exceed 125 mL (4.3 oz).

Table B2-2. Inner Packaging Normally Used in Doorstop Container.

Packaging	Usual volumes
Doorstop sample carrier, stainless steel	0.5, 1.0 or 1.6 mL
Doorstop sample carrier, stainless steel clad lead	0.5, 1.0 or 1.6 mL
Lead pak cylinder	Less than 70 mL
Bottled samples	No more than 125 mL

2.4 CONCLUSIONS

The two source terms evaluated ensure that the worst-case possible source term has been evaluated as a payload for the Doorstop Sample Carrier System.

2.5 REFERENCES

49 CFR 173, 1995, "Shippers--General Requirements for Shipments and Packagings," *Code of Federal Regulations*, as amended.

WHC-CM-2-14, *Hazardous Material Packaging and Shipping*, Westinghouse Hanford Company, Richland, Washington.

WHC, 1996, *Tank Waste Compositions and Atmospheric Dispersion Coefficients for Use in Safety Analysis Consequence Assessments*, WHC-SD-WM-SARR-016, Rev. 2, Westinghouse Hanford Company, Richland, Washington.

This page intentionally left blank.

3.0 RADIOLOGICAL RISK EVALUATION

3.1 INTRODUCTION

A radiological risk evaluation is not required for the Doorstop Sample Carrier System since it is shown to meet the performance standards of the DOT/NRC regulations.

This page intentionally left blank.

4.0 CONTAINMENT EVALUATION

4.1 INTRODUCTION

The Doorstop Sample Carrier System meets the leaktight criteria of ANSI N14.5 (ANSI 1987) and maintains containment of the payload through NCT and HAC. Leak rate calculations were performed per ANSI N14.5 (ANSI 1987) to determine the leak rate acceptance criteria based on the payload. As shown in Part B, Section 4.7, the allowable leak rate is much greater than leaktight. Therefore, there is a significant amount of conservatism in the design of the Doorstop Sample Carrier System for maintaining containment of the payload.

The Doorstop container utilizes a Neoprene[1] containment gasket. It has been shown by annual leak testing and analysis that containment will be maintained through all normal and accident conditions of transport.

4.2 CONTAINMENT SOURCE SPECIFICATION

The containment source is based on the worst-case, all-solid, source term from all waste tanks (Part B, Section 2.0). The Doorstop Sample Carrier System is used for transporting liquid tank samples, and therefore this source term conservatively represents the payload.

4.3 NORMAL TRANSFER CONDITIONS

4.3.1 Conditions To Be Evaluated

The conditions to be evaluated for normal conditions include hot and cold environmental conditions, pressurization, the 1.2-m (4-ft) drop onto an unyielding surface, and vibration normally incident to transport. The 1.2-m (4-ft) drop is enveloped by the 9-m (30-ft) drop; therefore, the calculations referred to are the 9-m (30-ft) drop calculations. The evaluations will consider the loading effects on the containment boundary of the Doorstop container from these scenarios.

4.3.2 Containment Acceptance Criteria

Containment is maintained during NCT. The acceptance criteria is 5.81×10^{-5} std-cc/s per Part B, Section 4.7. The NCT stresses are evaluated and compared with American Society of Mechanical Engineers (ASME) *Boiler and Pressure Vessel Code* (BPVC), Section VIII (ASME 1995), allowables to demonstrate containment has been maintained, based on analysis.

---

[1] Neoprene is a trademark of E. I. du Pont de Nemours and Company.

4.3.3 Containment Model

The containment model used for the environmental conditions, pressurization, and drop consists of the Doorstop container as leak tested and transported. Three drop orientations are evaluated.

4.3.4 Containment Calculations

The drop is performed in three orientations for the 9-m (30-ft) drop (enveloping case). An evaluation was performed to develop this worst-case *g*-loading from the actual N-55 crush observed after the drop tests of the *Sample Pig Transport System* (Part B, Section 7.6.1.4). As demonstrated by the evaluation, the Doorstop container will maintain containment after the 9-m (30-ft) drop based on meeting ASME BPVC, Section VIII allowables. The Doorstop container leak rate is measured to be less than 1×10^{-7} atm-cc/s, air, well below the 5.81×10^{-5} std-cc/s required.

4.4 ACCIDENT CONDITIONS

4.4.1 Conditions To Be Evaluated

The accident condition evaluation reviews hot and cold environmental conditions, pressurization, and the effects to the Doorstop Sample Carrier System containment boundary from the 9-m (30-ft) drop onto an unyielding surface.

4.4.2 Containment Acceptance Criteria

The allowable leak rate for accident conditions based on the contents is 1.04×10^{-1} cc/s, air (see Part B, Section 4.7). As the more restrictive NCT leak rate is met, the accident leak rate at standard conditions was not calculated.

4.4.3 Containment Model

The containment model used for the analysis consists of the Doorstop container as leak tested and transported. This packaging was compared to the Sample Pig Transport System, which was dropped 9 m (30 ft) in three orientations (side, end, and center of gravity-over-corner) onto a hard, unyielding surface (WHC 1995). The results of the Sample Pig Transport System testing were used to develop the forces used to evaluate the Doorstop container's ability to pass this test.

4.4.4 Containment Calculations

The Sample Pig Transport System drop was performed in three orientations for the 9-m (30-ft) drop (WHC 1995). Based on the results of the testing, the forces were calculated that the Doorstop container would experience if subjected to the same testing. The Doorstop container was evaluated (Part B, Section 7.6.1.4) to determine the stresses imposed by a 190*g* deceleration loading. The worst-case deceleration is 188*g*'s during the side drop. Stresses due to internal pressure are added to this evaluation for a combined stress case.

As demonstrated by evaluation, the Doorstop Container will maintain containment after the 9-m (30-ft) drop. The leak rate maintained is 1×10^{-7} atm-cc/s, air, as measured, well below the acceptance criteria of 1.04×10^{-1} std-cc/s.

4.5 CONTAINMENT EVALUATIONS AND CONCLUSIONS

The Doorstop container has been shown by 9-m (30-ft) drop analysis and closure vibration analysis to maintain containment during normal and accident conditions (Part B, Section 7.0).

An N-55 overpack loaded with a Pig Shipping Container was drop tested 9 m (30 ft) onto an unyielding surface. Since the Doorstop containers are also inside the N-55 overpack, a comparison of the two containers was performed to determine the effects of the drop on the Doorstop Sample Carrier System (Part B, Section 7.6.1.4). This *g*-loading was then used to analyze the closure lid of the Doorstop containers. Positive margins of safety in reference to ASME BPVC, Section VIII (ASME 1995), shear and tension allowables demonstrate that the closure lids will maintain containment during the 9-m (30-ft) ft drop. Normal vibration loads per ANSI N14.23 (ANSI 1992) also were evaluated, and positive margins of safety against fatigue, peak shock, and shear demonstrate containment is also maintained through vibration loadings normally incident to transport.

4.5.1 Environmental Conditions

The Doorstop container closure lid (containment vessel) consists of an 8-in. stainless steel pipe flange with a Parker 45-durometer Neoprene O-ring. The Neoprene material temperature range is -54 °C (-65 °F) to 149 °C (300 °F). The stainless steel material easily meets the requirements of -40 °C (-40 °F) to 37.77 °C (100 °F) and the Hanford Site conditions -32.77 °C (-27 °F) to 46.11 °C (115 °F).

4.6 REFERENCES

10 CFR 71, 1995, "Packaging and Transportation of Radioactive Material," *Code of Federal Regulations*, as amended.

49 CFR 173, 1995, "Shippers--General Requirements for Shipments and Packagings," *Code of Federal Regulations*, as amended.

ANSI, 1992, *Draft American National Standard Design Basis for Resistance to Shock and Vibration of Radioactive Material Packages Greater Than One Ton in Truck Transport*, ANSI N14.23, American National Standards Institute, New York, New York.

ANSI, 1987, *American National Standard for Radioactive Materials - Leakage Tests on Packages for Shipment*, ANSI N14.5, American National Standards Institute, Inc., New York, New York.

ASME, 1995, *ASME Boiler and Pressure Vessel Code*, Section VIII, Division 2, American Society of Mechanical Engineers, New York, New York.

NRC, 1984, Information Notice No. 84-72, *Clarification of Conditions for Waste Shipments Subject to Hydrogen Gas Generation*, U.S. Nuclear Regulatory Commission, Washington, D.C.

4.7 APPENDIX: CONTAINMENT ANALYSES

ENGINEERING SAFETY EVALUATION

Subject Leak Rate Calculation for Doorstop Sample Carrier Page 1 of 6
Originator J. S. Boettger Date 12/11/96
Checker P. C. Ferrell Date 12/11/96

I. Objectives:

The purpose of this analysis is to determine the maximum allowable leak rates for the Doorstop Container during both Normal Conditions of Transport (NCT) and Hypothetical Accident Conditions (HAC). This leak rate will be compared to the leakrate criterion set in the Doorstop SARP to determine if the criterion is acceptable.

II. References:

ANSI N14.5, 1987, *American National Standard for Radioactive Materials - Leakage Test on Packages for Shipment*, American National Standards Institute, New York, New York.

Chemical Rubber Publishing Company, 1961, *Handbook of Chemistry and Physics*, The Chemical Rubber Publishing Company, Cleveland, Ohio.

WHC, 1993, *Safety Analysis Report for Packaging, Doorstop Sample Carrier System*, WHC-SD-MP-SARP-001, Westinghouse Hanford Company, Richland, Washington.

III. Results and Conclusions:

The maximum allowable leakrate, L_R, is 5.81×10^{-5} std-cc/s. The containment criterion in the Doorstop SARP states that the Doorstop will be leaktight (less than 10^{-7} std-cc/s). Since this leaktight criterion is more restrictive than the maximum allowable leakrate, the leaktight criterion is acceptable.

IV. Engineering Evaluation:

The method used for calculating leak rates will follow ANSI N14.5 guidelines. The method involves first determining the maximum allowable release rates, in Ci/sec, using the worst case source term information given in Table 1. The release rates are converted to leak rates, in cc/sec, using the void volume of the Doorstop, and the release fraction of the source term.

The maximum allowable leak rates are calculated at the existing temperature and pressure within the Doorstop. These values are converted to STP conditions for comparison to the criterion in the SARP.

ENGINEERING SAFETY EVALUATION

Subject Leak Rate Calculation for Doorstop Sample Carrier Page 2 of 6

Originator J. S. Boettger Date 12/11/96

Checker P. C. Ferrell Date 12/11/96

Table 1. Solid Tank Waste Source Terms for the Doorstop.

Nucl.	Worst Case Solids Act. Conc.[a] (Ci/L)	A_2 (Ci)[a]	875 mL (30 oz) Max. Exp.[b] (Bq)	875 mL (30 oz) Max. Exp.[b] (Ci)	A_2s	875 mL (30 oz) Worst Case[c] (Bq)	875 mL (30 oz) Worst Case[c] (Ci)	A_2s
^{14}C	4.3E-06	5.4E+01	6.7E+03	1.8E-07	3.3E-09	1.4E+05	3.8E-06	7.0E-08
^{60}Co	1.3E-02	1.1E+01	2.0E+07	5.3E-04	4.9E-05	4.1E+08	1.1E-02	1.0E-03
^{79}Se	4.6E-07	5.4E+01	7.0E+02	1.9E-08	3.5E-10	1.5E+04	4.0E-07	7.4E-09
^{90}Sr	7.8E+01	2.7E+00	1.2E+11	3.2E+00	1.2E+00	2.5E+12	6.8E+01	2.5E+01
^{90}Y[f]	7.8E+01	5.4E+00	1.2E+11	3.2E+00	0.0	2.5E+12	6.8E+01	0.0
^{99}Tc	3.2E-01	2.4E+01	4.8E+08	1.3E-02	5.4E-04	1.0E+10	2.8E-01	1.2E-02
^{106}Ru	1.9E-06	5.4E+00	2.9E+03	7.8E-08	1.4E-08	6.3E+04	1.7E-06	3.1E-07
^{106}Rh[f]	1.9E-06	0.0	2.9E+03	7.8E-08	0.0	6.3E+04	1.7E-06	0.0
^{125}Sb	4.9E-03	2.4E+01	7.4E+06	2.0E-04	8.2E-06	1.6E+08	4.3E-03	1.8E-04
^{129}I	1.7E-04	UNLIMITED	2.6E+05	7.0E-06	0.0	5.6E+06	1.5E-04	0.0
^{134}Cs	2.5E-04	1.4E+01	3.7E+05	1.0E-05	7.4E-07	8.1E+06	2.2E-04	1.6E-05
^{137}Cs	2.7E+00	1.4E+01	4.1E+09	1.1E-01	8.2E-03	8.9E+10	2.4E+00	1.8E-01
^{137M}Ba[f]	2.6E+00	0.0	4.1E+09	1.1E-01	0.0	8.5E+10	2.3E+00	0.0
^{144}Ce	9.2E-09	5.4E+00	1.4E+01	3.8E-10	7.0E-11	3.0E+02	8.1E-09	1.5E-09
^{144}Pr[f]	9.2E-09	0.0	1.4E+01	3.8E-10	0.0	3.0E+02	8.1E-09	0.0
^{154}Eu	3.0E-01	1.4E+01	4.4E+08	1.2E-02	8.9E-04	9.6E+09	2.6E-01	1.9E-02
^{155}Eu	1.4E-04	5.4E+01	2.1E+05	5.7E-06	1.1E-07	4.4E+06	1.2E-04	2.2E-06
^{237}Np	2.7E-02	5.4E-03	4.1E+07	1.1E-03	2.0E-01	8.9E+08	2.4E-02	4.4E+00
^{238}Pu	5.1E-03	5.4E-03	7.8E+06	2.1E-04	3.9E-02	1.7E+08	4.5E-03	8.3E-01
^{239}Pu	4.3E-02	5.4E-03	6.7E+07	1.8E-03	3.3E-01	1.4E+09	3.8E-02	7.0E+00
^{240}Pu[d]	4.3E-02	5.4E-03	6.7E+07	1.8E-03	3.3E-01	1.4E+09	3.8E-02	7.0E+00
^{241}Pu	1.0E-01	2.7E-01	1.5E+08	4.1E-03	1.5E-02	3.3E+09	8.8E-02	3.3E-01
^{241}Am	3.0E-01	5.4E-03	4.4E+08	1.2E-02	2.2E+00	9.6E+09	2.6E-01	4.8E+01
^{242}Cm	5.4E-09	2.7E-01	8.1E+00	2.2E-10	8.2E-10	1.7E+02	4.7E-09	1.7E-08
^{244}Cm	1.6E-03	1.1E-02	2.4E+06	6.6E-05	6.1E-03	5.2E+07	1.4E-03	1.3E-01
TOTALS	1.6E+02		2.5E+11	6.7E+00	4.3E+00	5.3E+12	1.4E+02	9.3E+01

ENGINEERING SAFETY EVALUATION

[a]A_2 values taken from 49 CFR 173.435, 1995, "Shippers--General Requirements for Shipments and Packagings," *Code of Federal Regulations*, as amended.

[b]Maximum expected source term derived using the solid tank waste activity concentrations (Ci/L) and multiplying by the factor 0.041 such that the total Doorstop radioactive loading results in a dose rate less than 2 mSv/h (200 mrem/h) at the package surface.

[c]Worst-case source term assumes 875 mL (30 oz) of solid tank waste.

[d]^{240}Pu conservatively set equal to ^{239}Pu.

[e]Values taken from WHC-SD-WM-SARR-016, Rev. 2 (WHC 1996). Daughters calculated ORIGEN2.

[f] This radionuclide is a daughter as defined in 49 CFR 173.433, therefore, its activity was set to 0 for the A2 calculations.

ENGINEERING SAFETY EVALUATION

Subject Leak Rate Calculation for Doorstop Sample Carrier Page 4 of 6
Originator J. S. Boettger Date 12/11/96
Checker P. C. Ferrell Date 12/11/96

Release Rates

The total number of A_2s for the mixture is $93A_2$s, as shown in Table 1, making it a Type B package. The allowable release rates for NCT and HAC are given in 10 CFR §71.51, Additional requirements for Type B packages, and are given below. Also, the total number of curies is 140 Ci, so the A_2 for the mixture is 140 Ci/93 = 1.51 Ci.

Release rate for NCT, R_N, = $1x10^{-6}A_2$/hr = 2.778×10^{-10} A_2/sec
Release rate for HAC, R_A, = $1A_2$ /week = 1.653×10^{-6} A_2 /sec

$R_N = (2.778 \times 10^{-10})(1.51 \text{ Ci}) = 4.19 \times 10^{-10}$ Ci/sec
$R_A = (1.653 \times 10^{-6})(1.51 \text{ Ci}) = 2.50 \times 10^{-6}$ Ci/sec

Activity Concentration

For NCT and HAC, a fraction of the solid material is assumed to exist as suspended particles in the void volume. ANSI N14.5, Example B16.31, suggests a maximum particle density of $9.0x10^{-6}$ g/cc. The total grams in the source term is calculated to be 52.5 g, as shown in the Appendix.

$C_N = C_A = (9.0x10^{-6} \text{ g/cc})(140 \text{ Ci})/(52.5 \text{ g}) = 2.4 \times 10^{-5}$ Ci/cc

ENGINEERING SAFETY EVALUATION

Subject Leak Rate Calculation for Doorstop Sample Carrier Page 5 of 6
Originator J. S. Boettger Date 12/11/96
Checker P. C. Ferrell Date 12/11/96

Allowable Leak Rates

For NCT, $L_N = R_N/C_N = 4.19 \times 10^{-10}$ Ci/sec)/(2.4×10^{-5} Ci/cc) = 1.75×10^{-5} cc/sec.
For HAC, $L_A = R_A/C_A = 2.50 \times 10^{-6}$ Ci/sec)/(2.4×10^{-5} Ci/cc) = 1.04×10^{-1} cc/sec.

The bounding case is the more restrictive L_N. The conditions for NCT are a temperature of 173°F (351 K) and a pressure of 5 psig (1.34 atm). To find, L_R, the leakage rate at standard conditions, the flow conditions must first be evaluated.

The critical pressure ratio for air is 0.528. For NCT, the pressure ratio, Pd/Pu, using 1.0 atm as the downstream pressure, is 1.0 atm/1.34 atm = 0.746. So, the flow is unchoked and L_R is found using Equation B15 from ANSI N14.5.

$$L_R = L_N \left(\frac{\mu_N}{\mu_R}\right) \frac{(P_u - P_d)_R}{(P_u - P_d)_N} \; cm^3/s$$

where:

L_R = Leakage rate at STP (std cm³/s)	
L_N = Leakage rate at NCT conditions	= 1.75×10^{-5} cm³/s
μ_R = fluid viscosity at STP (air)	= 0.0185 cP (ANSI N14.5, Table B1)
μ_N = fluid viscosity at NCT conditions (air)	= 0.0211 cP (Chemical Handbook)
$(P_u - P_d)_R$ = pressure differential at STP	= 0.99 atm (1.00 atm - 0.01 atm)
$(P_u - P_d)_N$ = pressure differential at NCT	= 0.34 atm (1.34 atm - 1.00 atm)

Solving for L_R gives 5.81×10^{-5} std cm³/s

This is the maximum allowable leak rate to remain within the requirements of 10CFR §71.51.

ENGINEERING SAFETY EVALUATION

Subject Leak Rate Calculation for Doorstop Sample Carrier Page 6 of 6
Originator J. S. Boettger Date 12/11/96
Checker P. C. Ferrell Date 12/11/96

V. Appendix

Mass of Source Term

	Activity	Spec.Activity	Quantity		Activity	Spec.Activity	Quantity
Nuclide	Ci	Ci/g	g	Nuclide	Ci	Ci/g	g
C-14	3.80e-06	4.50e+00	8.44e-07	Ce-144	8.10e-09	3.20e+03	2.53e-12
Co-60	1.10e-02	1.10e+03	1.00e-05	Pr-144	8.10e-09	7.60e+07	1.07e-16
Se-79	4.00e-07	7.00e-02	5.71e-06	Eu-154	2.60e-01	2.60e+02	1.00e-03
Sr-90	6.80e+01	1.40e+02	4.86e-01	Eu-155	1.20e-04	4.90e+03	2.45e-08
Y-90	6.80e+01	5.40e+05	1.26e-04	Np-237	2.40e-02	7.10e-04	3.38e+01
Tc-99	2.80e-01	1.70e-02	1.65e+01	Pu-238	4.50e-03	1.70e+01	2.65e-04
Ru-106	1.70e-06	3.30e+03	5.15e-10	Pu-239	3.80e-02	6.20e-02	6.13e-01
Rh-106	1.70e-06	3.50e+09	4.86e-16	Pu-240	3.80e-02	2.30e-01	1.65e-01
Sb-125	4.30e-03	1.00e+03	4.30e-06	Pu-241	8.80e-02	1.00e+02	8.80e-04
I-129	1.50e-04	1.80e-04	8.33e-01	Am-241	2.60e-01	3.40e+00	7.65e-02
Cs-134	2.20e-04	1.30e+03	1.69e-07	Cm-242	4.70e-09	3.30e+03	1.42e-12
Cs-137	2.40e+00	8.70e+01	2.76e-02	Cm-244	1.40e-03	8.10e+05	1.73e-09
Ba-137m	2.30e+00	5.40e+08	4.26e-09				
				Totals	1.42e+02	--------	5.25e+01

5.0 SHIELDING EVALUATION

5.1 INTRODUCTION

This shielding evaluation supports the shipment of tank waste samples in the Doorstop Sample Carrier System. The Doorstop Sample Carrier System will transport liquid and solid samples from the Hanford Site underground storage tanks. A 125-mL sample is placed inside a "paint can," which is then placed inside the Doorstop container. A maximum of seven Doorstops are placed inside a DOT 208-L drum, which is then loaded into an N-55 overpack. There are several other loading configurations for the Doorstop Sample Carrier System. However, the other configurations have a smaller radioactive inventory and in some cases additional shielding. Therefore, the shielding analysis results for the configuration that includes seven 125-mL samples will bound the results for these other configurations.

Transportation safety typically requires a dose rate of less than 2 mSv/h (200 mrem/h) on the surface of the overpack, less than 2 mSv/h (200 mrem/h) at the vehicle surface, and less than 0.1 mSv/h (10 mrem/h) at 2 m from the surface. There is an additional limit of 0.05 mSv/h (5 mrem/h) in any normally occupied space (i.e., at the location of the truck driver) if the driver is a qualified Hanford Site radiological worker. If the driver is not a qualified radiological worker, the allowable dose rate is reduced to 0.02 mSv/h (2 mrem/h). If the dose rates are exceeded, the administrative controls outlined in Part A, Section 6.0, will be followed.

5.2 DIRECT RADIATION SOURCE SPECIFICATION

5.2.1 Gamma Source

The activity concentrations used to derive the gamma source term were taken from Part B, Section 2.0, and are listed in Table B5-1. The Doorstop Sample Carrier System will contain both solid and liquid tank waste. The shielding analysis will be done using the worst-case solid tank waste radionuclide composition (see Table B5-1) since the dose rates from solid tank waste bounds those from liquid waste. Two different cases will be analyzed as described below.

Historically, the dose rates on the surface of the N-55 overpack have been less than 2 mSv/h (200 mrem/h). The first configuration analyzed is for a radioactive inventory that results in a 2-mSv/h (200-mrem/h) surface dose rate when seven 125-mL samples (875 mL total) are loaded into the N-55. This source term, called the maximum expected source term, was derived using the worst-case solid tank waste activity concentrations (Table B5-1) and reducing the total activity of each radionuclide to yield a surface dose rate of 2 mSv/h (200 mrem/h). A scaling factor of 0.047 was applied to the activity concentrations (Ci/L) from Table B5-1 to produce 2 mSv/h (200 mrem/h). The second case assumes that seven 125-mL samples (875 mL total) containing the worst-case solids source term from Table B5-1 are loaded in the N-55. Both source terms are listed in Table B5-1.

Table B5-1. Solid Tank Waste Source Terms for the Doorstop Sample Carrier System.

Nuclide	Worst-case tank solids activity concentration[a] (Ci/L)	875 mL of maximum[b] expected (Ci)	875 mL of maximum[b] expected (Bq)	875 mL of worst-case tank solids (Ci)	875 mL of worst-case tank solids (Bq)
^{14}C	4.3 E-06	2.0 E-07	7.4 E+03	3.8 E-06	1.4 E+05
^{60}Co	1.3 E-02	6.1 E-04	2.3 E+07	1.1 E-02	4.2 E+08
^{79}Se	4.6 E-07	2.2 E-08	8.1 E+02	4.0 E-07	1.5 E+04
^{90}Sr	7.8 E+01	3.7 E+00	1.4 E+11	6.8 E+01	2.5 E+12
^{90}Y	7.8 E+01	3.7 E+00	1.4 E+11	6.8 E+01	2.5 E+12
^{99}Tc	3.2 E-01	1.5 E-02	5.6 E+08	2.8 E-01	1.0 E+10
^{106}Ru	1.9 E-06	8.9 E-08	3.3 E+03	1.7 E-06	6.2 E+04
^{106}Rh	1.9 E-06	8.9 E-08	3.3 E+03	1.7 E-06	6.2 E+04
^{125}Sb	4.9 E-03	2.3 E-04	8.5 E+06	4.3 E-03	1.6 E+08
^{129}I	1.7 E-04	8.0 E-06	3.0 E+05	1.5 E-04	5.5 E+06
^{134}Cs	2.5 E-04	1.2 E-05	4.4 E+05	2.2 E-04	8.1 E+06
^{137}Cs	2.7 E+00	1.3 E-01	4.8 E+09	2.4 E+00	8.7 E+10
^{137m}Ba	2.6 E+00	1.2 E-01	4.4 E+09	2.3 E+00	8.4 E+10
^{144}Ce	9.2 E-09	4.3 E-10	1.6 E+01	8.1 E-09	3.0 E+02
^{144}Pr	9.2 E-09	4.3 E-10	1.6 E+01	8.1 E-09	3.0 E+02
^{154}Eu	3.0 E-01	1.4 E-02	5.2 E+08	2.6 E-01	9.7 E+09
^{155}Eu	1.4 E-04	6.6 E-06	2.4 E+05	1.2 E-04	4.5 E+06
^{237}Np	2.7 E-02	1.3 E-03	4.8 E+07	2.4 E-02	8.7 E+08
^{238}Pu	5.1 E-03	2.4 E-04	8.9 E+06	4.5 E-03	1.7 E+08
^{239}Pu	4.3 E-02	2.0 E-03	7.4 E+07	3.8 E-02	1.4 E+09
^{240}Pu[c]	4.3 E-02	2.0 E-03	7.4 E+07	3.8 E-02	1.4 E+09
^{241}Pu	1.0 E-01	4.7 E-03	1.7 E+08	8.8 E-02	3.2 E+09
^{241}Am	3.0 E-01	1.4 E-02	5.2 E+08	2.6 E-01	9.7 E+09
^{242}Cm	5.4 E-09	2.5 E-10	9.3 E+00	4.7 E-09	1.7 E+02
^{244}Cm	1.6 E-03	7.5 E-05	2.8 E+06	1.4 E-03	5.2 E+07
Totals	1.6 E+02	7.7 E+00	2.9 E+11	1.4 E+02	5.3 E+12

[a] Taken from WHC-SD-WM-SARR-016, Rev 2 (WHC 1996).

[b] Maximum expected source term derived using the solid tank waste activity concentrations (Ci/L) and multiplying by the factor 0.047 such that the total radioactive loading (875 mL = 7 Doorstops x 125 mL) results in a dose rate less than 200 mrem/h at the N-55 overpack surface.

[c] ^{240}Pu conservatively set equal to ^{239}Pu.

WHC, 1996, Tank Waste Compositions and Atmospheric Dispersion Coefficients for Use in Safety Analysis Consequence Assessments, WHC-SD-WM-SARR-016, Rev. 2, Westinghouse Hanford Company, Richland, Washington.

The ORIGEN2 (Schmittroth 1994) computer code was used to calculate the gamma-ray source based on the radioactive loadings identified in Table B5-1. Table B5-2 lists the ORIGEN2 photon emission rates for each energy group. The ORIGEN2 was run using the photon library for bremsstrahlung in water.

Table B5-2. Photon Emission Rates (Photons/s) for the Doorstop Sample Carrier System.

Energy (MeV)	875 mL of maximum expected source term	875 mL of worst-case tank solids	Energy (MeV)	875 mL of maximum expected source term	875 mL of worst-case tank solids
0.015	8.41 E+09	1.56 E+11	1.25	3.58 E+08	6.62 E+09
0.025	1.78 E+09	3.29 E+10	1.75	1.27 E+07	2.35 E+08
0.0375	1.59 E+09	2.94 E+10	2.25	1.32 E+03	2.43 E+04
0.0575	1.92 E+09	3.56 E+10	2.75	3.83 E+00	7.09 E+01
0.085	1.07 E+09	1.98 E+10	3.5	2.36 E+00	4.36 E+01
0.125	9.21 E+08	1.70 E+10	5	9.58 E-01	1.77 E+01
0.225	1.04 E+09	1.93 E+10	7	1.09 E-01	2.01 E+00
0.375	4.85 E+08	8.98 E+09	11	1.24 E-02	2.29 E-01
0.662*	5.07 E+09	9.38 E+10	Total	2.30 E+10	4.25 E+11
0.85	3.46 E+08	6.40 E+09			

*Changed from 0.575 MeV to 0.662 Mev to accurately reflect the photon emitted during the decay of ^{137m}Ba.

5.2.2 Beta Source

Beta particles originating in the source do not contribute to the dose rate outside the overpack because of the shielding provided by the shipping container. This shielding is described in Part B, Section 5.4.3. The bremsstrahlung radiation produced by the deceleration of the beta particles in the source is accounted for in the photon emission rates calculated using the ORIGEN2 (Schmittroth 1994) computer code.

5.2.3 Neutron Source

All the actinides listed in Table B5-1 will fission spontaneously. The total neutron source strength from spontaneous fission was computed to be 3.2×10^2 neutrons/s for 875 mL of the worst-case solid tank waste. The ratio of the neutron dose to the gamma dose will be the same for both cases; i.e., 875 mL of the maximum expected and 875 mL of the worst-case source term. The neutron source term was calculated assuming that the source material was in oxide form. The concentration of fissile material is very low, so neutron multiplication will also be low (Part B, Section 6.0). The neutron dose rate was estimated using the methods described in Nelson (1996) and was found to be insignificant compared to the gamma dose rate. Therefore, the neutron dose rates are not reported.

5.3 SUMMARY OF SHIELDING PROPERTIES OF MATERIALS

The shielding consists mainly of the steel contained in the Doorstop Sample Carrier System. There is also a small amount shielding from the steel in the 55-gallon drum and the outer shell of the N-55 overpack. The Doorstops are surrounded by a polystyrene spacer, and the volume between the inner and outer shell of the N-55 overpack is filled with polyurethane foam. However, these plastic materials provide little shielding because of their low density. The shielding attenuation properties for the bulk materials used in this analysis were obtained from the Monte Carlo N-Particle (MCNP) computer code data library (Breismeister 1993; Carter 1995). A description of the configuration and densities of the shielding materials used in the calculational models is given in Part B, Section 5.4.3.

5.4 NORMAL CONDITIONS OF TRANSPORT

5.4.1 Conditions To Be Evaluated

Dose rates will be evaluated at the overpack surface; at the vehicle surface, which in this case is the side or back of the truck; and at 2 m from the vehicle surface. Dose rates will also be calculated at 15 cm (6 in.) from the front end of the truck bed, which is the approximate distance to the nearest normally occupied space; i.e., the driver.

5.4.2 Acceptance Criteria

Transportation safety specifies a maximum of 2 mSv/h (200 mrem/h) on any surface of the overpack, 2 mSv/h (200 mrem/h) at the vehicle surface, 0.1 mSv/h (10 mrem/h) at 2 m from the vehicle surface, and 0.05 mSv/h (5 mrem/h) in any normally occupied space for radiological workers or 0.02 mSv/h (2 mrem/h) in any normally occupied space for nonradiological workers. If the limits are exceeded, the administrative controls outlined in Part A, Section 6.0, will be enforced.

5.4.3 Shielding Model

The MCNP computer code (Breismeister 1993; Carter 1995) was used for the gamma-ray dose rate calculations. MCNP is a three-dimensional Monte Carlo computer code and uses Evaluated Nuclear Data Files (ENDF/B) for cross sections (BNL 1991). The ENDF/B system is maintained by the National Nuclear Data Center at Brookhaven National Laboratory under contract from the U.S. Department of Energy. The quality assurance documentation of MCNP for use at the Hanford Site is given in Carter (1996). Bremsstrahlung photons are accounted for in the dose rate calculations. Fluence-to-dose conversion factors were conservatively based on an anterior-to-posterior irradiation pattern (ANSI/ANS 1991) and are listed in Table B5-3.

Table B5-3. Photon Fluence-to-dose Conversion Factors.*

Energy (MeV)	Flux-to-dose rate (mrem/h)/(photon/cm^2/s)	Energy (MeV)	Flux-to-dose rate (mrem/h)/(photon/cm^2/s)
1.00 E-02	2.232 E-05	5.00 E-01	9.144 E-04
1.50 E-02	5.625 E-05	6.00 E-01	1.076 E-03
2.00 E-02	8.568 E-05	8.00 E-01	1.379 E-03
3.00 E-02	1.184 E-04	1.00 E+00	1.656 E-03
4.00 E-02	1.314 E-04	1.50 E+00	2.246 E-03
5.00 E-02	1.382 E-04	2.00 E+00	2.758 E-03
6.00 E-02	1.440 E-04	3.00 E+00	3.672 E-03
8.00 E-02	1.624 E-04	4.00 E+00	4.500 E-03
1.00 E-01	1.919 E-04	5.00 E+00	5.292 E-03
1.50 E-01	2.797 E-04	6.00 E+00	6.012 E-03
2.00 E-01	3.708 E-04	8.00 E+00	7.488 E-03
3.00 E-01	5.616 E-04	1.00 E+01	8.892 E-03
4.00 E-01	7.416 E-04	1.20 E+01	1.040 E-02

*ANSI/ANS, 1991, Neutron and Gamma-ray Fluence-to-dose Factors, ANSI/ANS-6.1.1-1991, American National Standards Institute/American Nuclear Society, New York, New York.

The photon source term is shown in Table B5-2 and was assumed to be homogeneously distributed throughout the volume of the samples. The solid tank waste was modeled as water with a density of 1.6 g/cc.

The 125-mL sample bottle has an outside diameter of approximately 5.5 cm and a height of 12.3 cm. The 125-mL sample was modeled as a cylinder with an outside diameter of 5.5 cm and a height of 5.26 cm, which results in a sample size of 125 cc. The 125-mL sample is placed in a "paint can," which is then placed into the Doorstop container, the DOT 208-L drum, and the N-55 overpack. The small amount of shielding provided by the paint can and sample bottle is ignored for this analysis. Figure B5-1 shows the arrangement of the seven Doorstops in the DOT 208-L drum.

A maximum of two overpacks may be loaded on the truck at any one time (Figure B5-2). The overpacks are vertically oriented on the truck and are spaced apart by 15.24 cm (6 in.). The distance from the centerline of the overpacks to the side of the truck is 117 cm (3 ft, 10 in.), and the distance from the overpack centerline to the back of the truck is 146 cm (4 ft, 9.4 in.). Therefore, the vehicle surface will be defined as the side of the truck in this analysis. The maximum dose rate at the side of the truck (vehicle surface) will occur between the front and rear overpacks when two overpacks are loaded on the truck. The distance from an overpack to a person located on the side of the truck at the midpoint between the front and rear overpacks is 126 cm (4 ft, 1.4 in.). The driver is located 33 cm (13 in.) from the overpack that is located on the front end of the truck bed. For simplicity, a single N-55 was modeled in MCNP; however, the dose contributions from both overpacks will be accounted for in the dose rate calculations.

Figure B5-1. Arrangement of the Doorstop Containers in the N-55.

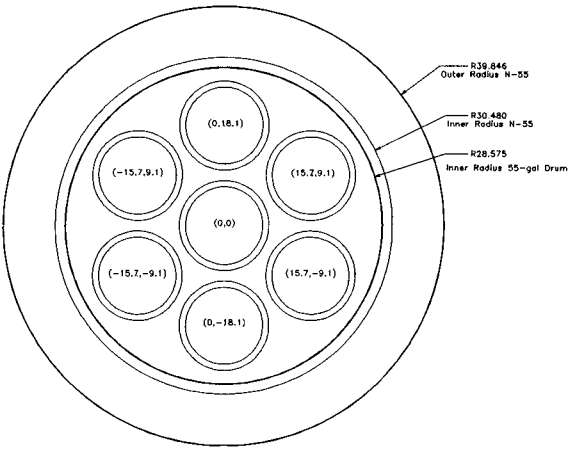

(Note: Dimensions in in.)

Figure B5-2. Simplified Sketch of Doorstop Sample Carrier System Transport Vehicle.

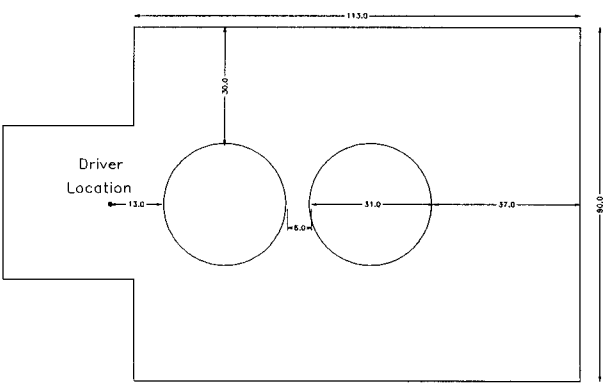

(Note: Dimensions in in.)

Tables B5-4 and B5-5 summarize the radial and axial MCNP models.

Table B5-4. Doorstop Sample Carrier System Radial Geometry and Material Composition.

Zone (material)	Outer radius (cm)	Thickness (cm)	Material density (g/cc)
Source (water)	2.750	2.750	1.6
Gap (air)	6.985	4.235	0.00122
Doorstop container (steel)	8.103	1.118	8.0
Polystyrene spacer (polystyrene)	28.575	NA[a]	0.0288[b]
55-gal drum (steel)	28.706	0.131	8.0
Gap (air)	30.480	1.774	1.22E-3
N-55 (polyurethane)	39.745	9.266	0.0481[b]
N-55 (steel)	39.846	0.101	7.86

[a]The polystyrene spacer fills the volume between the seven Doorstops and the inner dimensions of the 55-gal drum.

[b]The polystyrene spacer and the polyurethane contained in the N-55 were modeled in MCNP with a chemical composition of CH_2. Due to the low densities of these materials, the results are very insensitive to the exact[c]chemical form of the plastics.

Table B5-5. Doorstop Sample Carrier System Axial Geometry and Material Composition.

Zone (material)	MCNP top axial plane (cm)	Zone thickness (cm)	Material density (g/cc)
N-55 lid (steel)	77.732	0.101	8.0
N-55 (polyurethane)	77.631	17.78	0.0481[a]
Drum lid (steel)	59.851	0.161[b]	8.0
Polystyrene spacer (polystyrene)	59.690	32.555	0.0288[a]
Top of Doorstop (steel)	27.135	1.024	8.00
Gap (air)	26.111	19.581	1.22E-3
Top of source (water)	6.530	5.260	1.6
Bottom of Doorstop	1.270	1.270	8.00
Polystyrene spacer (polystyrene)	0.000	24.765	0.0288[a]
55-gal drum (steel)	-24.765	0.131	8.00
N-55 (polyurethane)	-24.896	14.000	0.0481[a]
N-55 bottom/inside (steel)	-38.896	0.101	8.00
Bottom plane of N-55 (steel)	-38.997	NA	NA

MCNP = Monte Carlo N-Particle (computer code).

[a]The polystyrene spacer and the polyurethane contained in the N-55 were modeled in MCNP with a chemical composition of CH_2. Note that due to the low densities of these materials, the results are very insensitive to the exact chemical form of the plastics.

[b]The small air gap between the 55-gallon drum lid and the N-55 is ignored.

5.4.4 Shielding Calculations

Table B5-6 shows the gamma dose rate estimates from MCNP for various distances from the N-55 overpack for each of the two source terms. MCNP was only run for 875 mL of the worst-case tank solids. The results for 875 mL of the maximum expected source term were calculated by taking the values for 875 mL of the worst-case tank solids and multiplying by a factor of 0.054. This factor (0.054) was derived at by dividing 200 mrem/h by 3700 mrem/h, which is the maximum expected surface dose rate divided by the calculated dose rate for 875 mL of the worst-case tank solids. Because the two source term activities are only different by a factor of 0.054, the resulting dose rates from MCNP will differ by the same factor.

Table B5-6. Dose Rates Outside the Doorstop Sample Carrier System, mSv/h (mrem/h).

Detector location		875 mL of maximum expected source term	875 mL of worst case solids source term
Overpack surface	Side	2.0 (200)	37.0 (3700)
	Top	0.54 (54)	10.0 (1000)
	Bottom	1.7 (170)	29.0 (2900)
Vehicle surface[a]		0.29 (29)	5.4 (540)
2 m from vehicle surface		0.041 (4.1)	0.76 (76)
Driver location[b]		0.48 (48)	8.9 (890)

1 sievert = 100 rem

[a]Dose rate at the limiting location on the side of the truck bed.

[b]Driver located 13 in. from the overpack on the front end of the truck bed.

5.5 ACCIDENT CONDITIONS

5.5.1 Conditions To Be Evaluated

Testing was performed on the N-55 overpack, and it was found that the overpack lid maintained its integrity even after a 9-m (30-ft) drop test. The structural analysis indicates that the Doorstop Sample Carrier System also maintains its integrity after the drop. Therefore, there is no credible scenario that could occur during onsite shipment of the N-55 that would result in the loss of the lid or the loss of any shielding provided by the N-55, DOT 208-L drum, or Doorstop container. However, the N-55 overpack experienced permanent deformation from each of the three drop tests (end, side, and corner). The deformation resulted from some of the material of the spacer assembly being crushed during impact. This deformation will cause a slight decrease in the distance from the source to the overpack surface, which, in turn, will cause a slight increase in the dose rates. Figure 7.6.1.4-1 shows the amount of damage resulting from each of the drop tests. The side drop, which resulted in approximately 5.08 cm (2 in.) of damage to the N-55, will cause the greatest dose rate increase. Because the maximum dose rate during

normal conditions occurs on the side of the cask, the dose rates at the side of the cask will also be limiting after the drop tests.

5.5.2 Acceptance Criteria

The external dose rate from a single package shall not exceed 10 mSv/h (1000 mrem/h) at 1 m from the surface under accident conditions as directed by the onsite transportation safety program.

5.5.3 Shielding Model

The maximum dose rate at the vehicle surface during normal conditions of transfer is 0.29 mSv/h (29 mrem/h [see Table B5-7]) for the maximum expected source term. The location of the maximum vehicle surface dose rate is 126 cm from the surface of the overpack, and since two overpacks contribute to the dose rate at that location, the dose rate from a single overpack is 0.15 mSv/h (15 mrem/h). The radial dose at approximately 1 m from the overpack is decreasing at a rate slightly greater than 1/r, where r is the distance. Therefore, the dose rate at 1 m is conservatively estimated to be 0.19 mSv/h (19 mrem/h = 15 mrem/h x 1.26 m/1 m). For the side drop case the distance from the overpack will decrease by 5.08 cm (2 in.), which corresponds to a distance of 0.95 m from the overpack. The dose rate at 0.95 m, which corresponds to 1 m from the damaged package, is conservatively estimated to be 0.20 mSv/h (20 mrem/h = 15 mrem/h x 1.26 m/0.95 m), which is far below the 10-mSv/h (1000-mrem/h) limit at 1 m from the surface under accident conditions.

Similarly, for the worst-case solids source term, the resulting dose rate at 0.95 m is approximately 3.7 mSv/h (370 mrem/h), which also meets the 10-mSv/h (1000-mrem/h) limit at 1 m under accident conditions.

5.6 SHIELDING EVALUATION AND CONCLUSIONS

Table B5-7 shows the results of the shielding analysis. The dose rates for 875 mL of the maximum expected source term meets all of the limits except for the dose rate at the driver location. Additional shielding is required to reduce the dose rate at the driver location below the required limit. All of the dose rates for normal operating conditions exceed the limits for the shipment of 875 mL of the worst-case solids. When the allowable dose rates are exceeded, the administrative controls outlined in Part A, Section 6.0, will be enforced.

Table B5-7. Comparison of Maximum Dose Rates, mSv/h (mrem/h), with Dose Rate Limits.

Detector location	Limit	875 mL of maximum expected source term	875 mL of worst-case solid tank waste
Normal operating conditions			
Overpack surface	2 (200)	2.0 (200)	37.0[c] (3700)
Vehicle surface[a]	2 (200)	0.29 (29)	5.4[c] (540)
2 m from vehicle surface	0.1 (10)	0.041 (4.1)	0.76[c] (76)
Driver location[b]	0.05 (5)	0.48[c] (48)	8.9[c] (890)
Accident conditions			
1 m from overpack surface	10.0 (1000)	0.20 (20)	3.7 (370)

1 sievert = 100 rem

[a]Dose rate at the limiting location on the side of the truck bed.

[b]Driver located 33 cm (13 in.) from the overpack on the front end of the truck bed. The 5-mrem/h limit applies to a qualified radiological worker. If the driver is a nonradiological worker, the dose rate limit is 2 mrem/h.

[c] Additional shielding will be used to reduce the dose rates below the required limits (see Part A, Section 6.0).

5.7 REFERENCES

ANSI/ANS, 1991, *Neutron and Gamma-ray Fluence-to-dose Factors*, ANSI/ANS-6.1.1-1991, American National Standards Institute/American Nuclear Society, New York, New York.

Breismeister, J. F., Editor, 1993, *MCNP--A General Monte Carlo Code N-Particle Transport Code, Version 4a*, LA-12625, Los Alamos National Laboratory, Los Alamos, New Mexico.

Carter, L. L., 1995, *Certification of Version 4A for WHC Computer Platforms*, WHC-SD-MP-SWD-30001, Rev. 7, Westinghouse Hanford Company, Richland, Washington.

Nelson, J. V., 1996, *Estimation of Neutron Dose Rates from Nuclear Waste Packages* (internal memo 8M730-JVN-96-007 to J. R. Green, March 8), Westinghouse Hanford Company, Richland, Washington.

Schmittroth, F. A., 1994, *Conversion of ORIGEN2 to the Sun Workstations*, WHC-SD-NR-SWD-006, Rev. 1, Westinghouse Hanford Company, Richland, Washington.

5.8 APPENDICES

5.8.1 Listing of ORIGEN2 Input File for 875 mL of Worst-Case Source Term

```
-1
-1
-1
TIT     Doorstop - 875 mL All Solids - SOURCE TERM - DECAYED 1 YEAR
BAS     DECAY
LIP     0 0 0
LIB     0 1 2 3 381 382 383 9 0 0 1 1
PHO     101 102 103 10
RDA     222-S -  SOURCE TERM
INP     -1 1 -1 -1 1 1
RDA     SHORT DECAY TO BUILD IN PROGENY FOR SHORT HALF LIFE PARENTS
MOV     -1 1 0 1.00
RDA
DEC     0.25      1  2  5  2     DECAY FOR 1/4 YEAR
DEC     0.50      2  3  5  0     DECAY FOR 1/4 MORE YEARS TO 1/2 YR
DEC     0.75      3  4  5  0     DECAY FOR 1/4 MORE YEARS TO 3/4 YR
DEC     1.0       4  5  5  0     DECAY FOR 1/4 MORE YEARS TO 1 YR
RDA
CUT     5  1.E-10  7  1.E-10  9  1.E-10  -1
OPTL    4*8 8 8 7 8 16*8
OPTF    4*8 8 8 7 8 16*8
OPTA    4*8 8 8 7 8 16*8
OUT     5 1 -1 0
STP     4
1   270600 9.730E-06      0 0.000E+00      0 0.000E+00      0 0.000E+00
2   932370 3.405E+01 942380 2.629E-04 942390 6.114E-01 942400 1.668E-01
2   942410 8.543E-04 952410 7.577E-02 962420 1.422E-12 962440 1.731E-05
3    60140 8.527E-07 340790 5.743E-06 380900 4.986E-01 390900 1.250E-04
3   430990 1.652E+01 441060 5.082E-10 451060 4.777E-16 511250 4.165E-06
3   531290 8.498E-01 551340 1.701E-07 551370 2.760E-02 561371 4.277E-09
3   581440 2.540E-12 591440 1.072E-16 611470 0.000E+00 631540 9.634E-04
3   631550 2.581E-07      0 0.000E+00      0 0.000E+00      0 0.000E+00
0
END
```

5.8.2 Listing of MCNP Input File

```
Photon dose for DOORSTOP Transport System (7 Samples)
c
c    First define the source cells
c    mat#  mat den   surfaces
c
c     Container 1
1     1  -1.6 -1 105 -106                      $ Water-Source
2     2  -0.00122 (-1 106 -107):(1 -2 105 -107)$ Air inside container
3     3  -8.0 (2 -3 105 -107):(-3 107 -108):(-3 104 -105)
                    $ Doorstop Container - union of side/top/bottom
c
c     Container 2
4     1  -1.6 -201 105 -106                     $ Water-Source
5     2  -0.00122 (-201 106 -107):(201 -202 105 -107)$ Air inside contain
6     3  -8.0 (202 -203 105 -107):(-203 107 -108):(-203 104 -105)
                    $ Doorstop Container - union of side/top/bottom
c
c     Container 3
7     1  -1.6 -301 105 -106                     $ Water-Source
8     2  -0.00122 (-301 106 -107):(301 -302 105 -107)$ Air inside contain
9     3  -8.0 (302 -303 105 -107):(-303 107 -108):(-303 104 -105)
                    $ Doorstop Container - union of side/top/bottom
c
c     Container 4
10    1  -1.6 -401 105 -106                     $ Water-Source
11    2  -0.00122 (-401 106 -107):(401 -402 105 -107)$ Air inside contain
12    3  -8.0 (402 -403 105 -107):(-403 107 -108):(-403 104 -105)
                    $ Doorstop Container - union of side/top/bottom
c
c     Container 5
13    1  -1.6 -501 105 -106                     $ Water-Source
14    2  -0.00122 (-501 106 -107):(501 -502 105 -107)$ Air inside contain
15    3  -8.0 (502 -503 105 -107):(-503 107 -108):(-503 104 -105)
                    $ Doorstop Container - union of side/top/bottom
c
c     Container 6
16    1  -1.6 -601 105 -106                     $ Water-Source
17    2  -0.00122 (-601 106 -107):(601 -602 105 -107)$ Air inside contain
18    3  -8.0 (602 -603 105 -107):(-603 107 -108):(-603 104 -105)
                    $ Doorstop Container - union of side/top/bottom
c
c     Container 7
19    1  -1.6 -701 105 -106                     $ Water-Source
20    2  -0.00122 (-701 106 -107):(701 -702 105 -107)$ Air inside contain
21    3  -8.0 (702 -703 105 -107):(-703 107 -108):(-703 104 -105)
                    $ Doorstop Container - union of side/top/bottom
c
c    Polystyrene spacer - union of top/center/bottom assemblies
c
22    4  -0.0288 (-4 108 -109):(-4 3 203 303 403 503 603 703 104 -108):
                                  (-4 103 -104)
c
c    55 gal drum - union of top/center/bottom
c
23    3  -8.0 (-5 109 -110):(4 -5 103 -109):(-5 102 -103)
c
c    Air gap between 55 gal drum and the N-55 on the side
c
24    2  -0.00122 5 -6 102 -110
c
c    N-55 polyurethane - union of top/center/bottom
c
25    5  -0.0481 (-7 110 -111):(6 -7 102 -110):(-7 101 -102)
c
c    N-55 outer metal - union of top/center/bottom
c
26    3  -8.0 (-8 111 -112):(7 -8 101 -111):(-8 100 -101)
c
c    Last cells define the air outside the N-55 and the universe.
c
27    2 -0.00122 (-1000 112):(-1000 8):(-1000 -100)  $ Air - outside N-55
28    0  1000                    $ Void - outside universe
```

```
c
c    Radial surfaces for Container 1
c
1    cz  2.75  $ Container 1 - source - outside radius
2    cz  6.985 $ Container 1 - inside radius of Doorstop
3    cz  8.103 $ Container 1 - outside radius of Doorstop
c
c    Radial surfaces for 55 gal drum and N-55 Overpack
c
4     cz  28.575      $ 55-gal inner radius
5     cz  28.706      $ 55-gal outer radius
6     cz  30.48       $ N-55 inner radius
7     cz  39.745      $ N-55 poly outer radius
8     cz  39.846      $ N-55 steel outer radius
c
c    Axial surfaces
c
100   pz  -38.997     $ N-55 bottom -
101   pz  -38.896     $ N-55 bottom - 0.101 cm bottom metal
102   pz  -24.896     $ N-55 bottom - top of poly - 14 cm
103   pz  -24.765     $ 55 gal drum - bottom - upper plane - 0.131 metal
104   pz    0.000     $ Top of bot spacer (bot of Doorstop) - 28.66 cm
105   pz    1.27      $ Doorstop bottom - upper plane 1.27 cm thick
106   pz    6.53      $ Top of sample
107   pz   26.111     $ Doorstop top inside - lower plane
108   pz   27.135     $ Doorstop top - upper plane - 1.024 cm thick
109   pz   59.690     $ Top spacer upper plane - 28.66 cm thick
110   pz   59.851     $ 55-gal drum - top - upper plane - 0.161 cm thick
111   pz   77.631     $ N-55 top - lower plane
112   pz   77.732     $ N-55 top - upper plane - 0.101 cm thick
c
c    Source radial surfaces for Containers 2 - 7 with translation
c
201  701  cz 2.75  $ Container 2 - source - outside radius
202  701  cz 6.985 $ Container 2 - inside radius of Doorstop
203  701  cz 8.103 $ Container 2 - outside radius of Doorstop
301  702  cz 2.75  $ Container 3 - source - outside radius
302  702  cz 6.985 $ Container 3 - inside radius of Doorstop
303  702  cz 8.103 $ Container 3 - outside radius of Doorstop
401  703  cz 2.75  $ Container 4 - source - outside radius
402  703  cz 6.985 $ Container 4 - inside radius of Doorstop
403  703  cz 8.103 $ Container 4 - outside radius of Doorstop
501  704  cz 2.75  $ Container 5 - source - outside radius
502  704  cz 6.985 $ Container 5 - inside radius of Doorstop
503  704  cz 8.103 $ Container 5 - outside radius of Doorstop
601  705  cz 2.75  $ Container 6 - source - outside radius
602  705  cz 6.985 $ Container 6 - inside radius of Doorstop
603  705  cz 8.103 $ Container 6 - outside radius of Doorstop
701  706  cz 2.75  $ Container 7 - source - outside radius
702  706  cz 6.985 $ Container 7 - inside radius of Doorstop
703  706  cz 8.103 $ Container 7 - outside radius of Doorstop
1000  so  500.        $ air universe

tr701   -15.673    9.050   0          $ Container 2 Position
tr702     0.000   18.098   0          $ Container 3 Position
tr703    15.673    9.050   0          $ Container 4 Position
tr704    15.673   -9.050   0          $ Container 5 Position
tr705     0.000  -18.098   0          $ Container 6 Position
tr706   -15.673   -9.050   0          $ Container 7 Position
mode p                                $photon
c ***********************************************************
c                      SOURCE
c ***********************************************************
sdef    cel=d1  wgt=4.254E11 erg=d5 pos=d4
        rad= d2  ext= d3  axs=0 0 1      $
sc1  Source Cells
c
c        Container Cell #
c       1   2   3   4   5   6   7
si1  l  1   4   7  10  13  16  19
sp1     1   1   1   1   1   1   1
sc2  Source radius
si2  0  2.75  $ Source inner radius to outer radius = 0 to 2.75
sb2  -21 1.5  $ Source bias, -21 means radial power law p(x)=c|x|^a
              $ a = 1.5
sp2  -21 1  $ Source bias probability, -21 again means p(x)=c|x|^a
```

```
          $ a = 1
sc3  Source axial distribution
si3   1.27 6.53 $ Distances of the ends of the cylinder from POS
sc4  Source location
c    Container 1    x          y      z
si4  l              0.000     0.000   0
c    Container 2    x          y      z
                  -15.673     9.050   0
c    Container 3    x          y      z
                    0.000    18.098   0
c    Container 4    x          y      z
                   15.673     9.050   0
c    Container 5    x          y      z
                   15.673    -9.050   0
c    Container 6    x          y      z
                    0.000   -18.098   0
c    Container 7    x          y      z
                  -15.673    -9.050   0
sp4    1   1   1   1   1   1   1
sc5    Source distribution from ISO-PC for 7 Containers - 875 ml
#          si5          sp5          sb5
           l            d            d
           1.500e-02    1.555E+11   .001
           2.500e-02    3.285E+10   .001
           3.750e-02    2.938E+10   .01
           5.750e-02    3.555E+10   .01
           8.500e-02    1.983E+10   .5
           1.250e-01    1.703E+10   .5
           2.250e-01    1.932E+10   .7
           3.750e-01    8.978E+09  1.0
           6.620e-01    9.376E+10  1.0
           8.500e-01    6.402E+09  1.0
           1.250e+00    6.621E+09  1.0
           1.750e+00    2.351E+08  1.0
           2.250e+00    2.433E+04  1.0
           2.750e+00    7.085E+01  1.0
           3.500e+00    4.357E+01  1.0
           5.000e+00    1.773E+01  1.0
           7.000e+00    2.008E+00  1.0
           1.100e+01    2.285E-01  1.0
c           Total       4.254E+11  1.0 from ORIGEN2
c
c      ansi/ans-6.1.1-1991 fluence-to-dose,photons(mrem/hr/(p/cm**2/s)
c
de0    log  .01 .015 .02 .03 .04 .05
            .06 .08 .10 .15 .20 .30
            .40 .50 .60 .80 1.0 1.5
            2.0 3.0 4.0 5.0 6.0 8.0
            10. 12.
df0    log  2.232e-5 5.652e-5 8.568e-5 1.184e-4 1.314e-4 1.382e-4
            1.440e-4 1.624e-4 1.919e-4 2.797e-4 3.708e-4 5.616e-4
            7.416e-4 9.144e-4 1.076e-3 1.379e-3 1.656e-3 2.246e-3
            2.758e-3 3.672e-3 4.500e-3 5.292e-3 6.012e-3 7.488e-3
            8.892e-3 1.040e-2
c
c     Material Definitions
c
m1        1000.01p 0.6667     $ Source - water
          8000.01p 0.3333     $ air - Oxygen
m2        7000.01p -0.765     $ Air
          8000.01p -0.235
m3       26000.01p 67.97      $ SS-304
         24000.01p 20.0
         28000.01p 10.0
         25000.01p  2.00
          6000.01p  0.03
m4        6000.01p  2          $ Polystyrene - spacers - use C2H4
          1000.01p  4
m5        6000.01p  2          $ Polyurethane - N-55 - use C2H4
          1000.01p  4
print
c
phys:p j 1 1          $ Brems off & Coherent Scattering Off
e0   1.500e-02 2.500e-02 3.750e-02 5.750e-02 8.500e-02 1.250e-01
     2.250e-01 3.750e-01 6.620e-01 8.500e-01 1.250e+00 1.750e+00
     2.250e+00 2.750e+00 3.500e+00 5.000e+00 7.000e+00 1.100e+01
```

```
f05:p  0  40.85 3.9 0
fc05   1 cm from side - adjacent to source 3
f15:p  20.43 35.4  3.9 0
fc15   1 cm from side - between source 3 & 4
f25:p  0 0 78.73  0
fc25   1 cm from top -  over center source 1
f35:p  0 18.1 78.73  0
fc35   1 cm from top -  over edge source 3
f45:p  0 0 -40.  0
fc45  1 cm from bottom -  under center source 1
f55:p  0 18.1 -40.   0
fc55  1 cm from bottom -  under edge source 3
f65:p  0  125 3.9 0
fc65  Side of Vehicle - adjacent to source 3
f75:p  0  320 3.9 0
fc75  2 m from Side of Vehicle - adjacent to source 3
f85:p  0  73 3.9 0
fc85  13 in from Overpack - Driver Location - adjac to source 3
imp:p
c
c   Cell Importances
c
c   Cell  1    2    3    4    5    6    7    8    9   10
          1    1    2    1    1    2    1    1    2    1
c
c   Cell 11   12   13   14   15   16   17   18   19   20
          1    2    1    1    2    1    1    2    1    1
c
c   Cell 21   22   23   24   25   26   27   28
          2    4    4    4    6    7    7    0
nps   40000 $history
```

CHECKLIST FOR PEER REVIEW

Document Reviewed: Shielding Analysis for the Doorstop SARP

Scope of Review: Entire shielding analysis - Section 5.0

Yes	No	NA	
[X]	[ ]	[ ]	Previous reviews complete and cover analysis, up to scope of this review, with no gaps.
[X]	[ ]	[ ]	Problem completely defined.
[X]	[ ]	[ ]	Accident scenarios developed in a clear and logical manner.
[X]	[ ]	[ ]	Necessary assumptions explicitly stated and supported.
[X]	[ ]	[ ]	Computer codes and data files documented.
[X]	[ ]	[ ]	Data used in calculations explicitly stated in document.
[X]	[ ]	[ ]	Data checked for consistency with original source information as applicable.
[ ]	[ ]	[X]	Mathematical derivations checked including dimensional consistency of results.
[X]	[ ]	[ ]	Models appropriate and used within range of validity or use outside range of established validity justified.
[X]	[ ]	[ ]	Hand calculations checked for errors. Spreadsheet results should be treated exactly the same as hand calculations.
[X]	[ ]	[ ]	Software input correct and consistent with document reviewed.
[X]	[ ]	[ ]	Software output consistent with input and with results reported in document reviewed.
[X]	[ ]	[ ]	Limits/criteria/guidelines applied to analysis results are appropriate and referenced. Limits/criteria/guidelines checked against references.
[X]	[ ]	[ ]	Safety margins consistent with good engineering practices.
[X]	[ ]	[ ]	Conclusions consistent with analytical results and applicable limits.
[X]	[ ]	[ ]	Results and conclusions address all points required in the problem statement.
[X]	[ ]	[ ]	Format consistent with appropriate NRC Regulatory Guide or other standards
[ ]		[X]	Review calculations, comments, and/or notes are attached.
[X]	[ ]	[ ]	Document approved.

Paul Rittmann, PhD CHP Paul Rittmann Jan 8, 1997
Reviewer (Printed Name and Signature) Date

6.0 CRITICALITY EVALUATION

6.1 DISCUSSION AND RESULTS

Table B6-1 shows the calculations to determine the fissile content of the Doorstop Sample Carrier System. The activities for the radionuclides identified as fissile in 49 CFR 173.403(j) are included along with their specific activities from 49 CFR 173.435.

The quantity (g) of each fissile radionuclide is listed in Table B6-1. These values were calculated by dividing the radionuclide activity (Ci) by its specific activity (Ci/g). Table B6-1 shows that the total quantity of fissile material contained in the Doorstop Sample Carrier System is 3.2×10^{-2} g for the maximum expected source term and 6.1×10^{-1} g for the worst-case source term. Since the total quantity of fissile material is less than 15 g for both source terms, the Doorstop Sample Carrier System is exempt from fissile material classification (10 CFR 71.53), and no further analysis is required to address criticality concerns.

Table B6-1. Doorstop Sample Carrier System Fissile Inventory.

Nuclide	Activity (Ci)		Specific activity (Ci/g)*	Quantity (g)	
	Maximum expected	Worst case		Maximum expected	Worst case
^{238}Pu	2.4 E-04	4.5 E-03	1.7 E+01	1.4 E-05	2.7 E-04
^{239}Pu	2.0 E-03	3.8 E-02	6.2 E-02	3.2 E-02	6.1 E-01
^{241}Pu	4.7 E-03	8.8 E-02	1.0 E+02	4.7 E-05	8.8 E-04
Total	6.9 E-03	1.3 E-01	NA	3.2 E-02	6.1 E-01

*Specific activities taken from 49 CFR 173.435, 1995, "Shippers--General Requirements for Shipments and Packagings, Code of Federal Regulations, as amended.

6.2 REFERENCES

10 CFR 71, 1995, "Packaging and Transportation of Radioactive Material," *Code of Federal Regulations*, as amended.

49 CFR 173, 1995, "Shippers--General Requirements for Shipments and Packagings," *Code of Federal Regulations*, as amended.

This page intentionally left blank.

7.0 STRUCTURAL EVALUATION

7.1 INTRODUCTION

This section presents the structural analysis of the Doorstop Sample Carrier System and all associated lifting attachments. Tiedown assemblies are discussed in Part B, Section 10.0, since they are not a structural part of the package. This section demonstrates the Doorstop Sample Carrier System meets the intent of 10 CFR 71 requirements based on the analyses herein and drop testing performed on the package (WHC 1995).

7.2 STRUCTURAL EVALUATION OF PACKAGE

7.2.1 Structural Design and Features

As discussed in Part A, Section 2.0, the Doorstop Sample Carrier System consists of multiple packagings. Of those multiple packagings, two constitute a Type B NRC-certified packaging (USA/9070/B(U)): the DOT 208-L drum and the N-55 overpack. The inner container is an onsite container used to transport onsite tank waste samples.

The primary containment for the Doorstop Sample Carrier System is the Doorstop container. The DOT 208-L drum is considered secondary containment in this system. The N-55 overpack acts as an impact limiter in the Doorstop Sample Carrier System. The foam inner spacer around the Doorstop container inside the DOT 208-L drum provides additional cushioning.

The Doorstop container is sealed with a Neoprene O-ring and threaded top closure. The DOT 208-L drum is sealed with a NEOZAN gasket and a bolted lock ring is tightened around the outside of the drum lid. The N-55 overpack has a Neoprene gasket at the stepped joint between the upper and lower section of the overpack. Four toggle clamps on the outside of the N-55 overpack connect the upper and lower sections.

7.2.2 Mechanical Properties of Materials

Mechanical properties of the materials are shown in Table B7-1.

Table B7-1. Mechanical Properties of Materials.

Material description	Temperature °C (°F)	Yield S_y MPa (ksi)	Ultimate S_u MPa (ksi)	Allowable S_m MPa (ksi)
Galvanized steel	38 (100) 93 (200) 149 (300)	248 (36)	414 (60)	110 (16) 110 (16) 110 (16)
ASTM A312 304L stainless steel pipe	38 (100) 93 (200) 149 (300)	172 (25) 148 (21) 132 (19)	483 (70) 456 (66.2) 420 (60.9)	115 (16.7) 115 (16.7) 115 (16.7)
*ASTM A276 304L stainless steel rod	38 (100) 93 (200) 149 (300)	172 (25) 148 (21) 132 (19)	483 (70) 456 (66.2) 420 (60.9)	115 (16.7) 98.6 (14.3) 88.3 (12.8)
ASTM A240 304L stainless steel plate	38 (100) 93 (200) 149 (300)	172 (25) 147 (21.3) 132 (19.1)	483 (70) 456 (66.2) 420 (60.9)	115 (16.7) 115 (16.7) 115 (16.7)
Lead	38 (100) 93 (200) 149 (300)	120 (827.4) 114.6 (790) 110.7 (763)	135 (931)	

ASTM = American Society for Testing and Materials.
* = ASTM A479 values used as a conservative equivalent.
All values from ASME, 1995, American Society of Mechanical Engineers Boiler and Pressure Vessel Code, Section II, American Society of Mechanical Engineers, New York, New York.

7.2.3 Chemical and Galvanic Reactions

The materials of fabrication for the containment vessel, Doorstop container (i.e., stainless steel, lead, and Viton) will not cause significant chemical, galvanic, or other reactions with each other or with the contents.

7.2.4 Size of Package and Cavity

The overall size of the package is detailed in Part A, Section 2.0. The size of the contents cavity is the cavity of the Doorstop container, which is 14 cm (5.5 in.) inside diameter by 22.56 cm (8.88 in.) high.

7.2.5 Weights and Centers of Gravity

The approximate weight of each component of the Doorstop Sample Carrier System is as shown in Table B7-2.

Table B7-2. Doorstop Sample Carrier System Weights.

Component	Weight kg (lb)
Overpack	90.7 (200)
Drum with padding	30.4 (67)
Seven Doorstop containers	101.6 (224)
Seven Doorstops	101.6 (224)
TOTAL	324 (715)

The total weight of the Doorstop Sample Carrier System with seven Doorstops is 324 kg (715 lb) with the center of gravity located on the vertical centerline of the cask 55.3 cm (21.78 in.) from the bottom.

7.2.6 Tamper Indicating Feature

The N-55 overpack tamper-indicating feature is evidence tape which is placed over the joint between the top and bottom overpack shells. When intact, the seal provides evidence that the package has not been opened by unauthorized persons.

7.2.7 Positive Closure

The Doorstop Sample Carrier System must have a positive fastening device which cannot be inadvertently opened [10 CFR 71.43(c)]. The Doorstop container has a screw top lid that cannot be reached from outside the N-55 overpack. The DOT 208-L drum lid has a locking ring bolt that is torqued to 54.23 N-m (40 ft-lb). The N-55 overpack is securely closed with four toggle clamps. Past use of the toggle clamps has resulted in damage to the fiber glass inner shell of the N-55 overpack. To avoid damage in the future, the closure instructions for the overpack were modified. See Part B, Section 7.6.1.6 for the evaluation on the closure procedure used for activation of the toggle clamps.

7.2.8 Lifting and Tiedown Devices

The four lifting locations on the N-55 overpack have previously been approved for a gross weight of 341 kg (750 lb) (NuPac 1987). The Doorstop Sample Carrier System authorized gross weight of 273 kg (600 lb) is lower; therefore, the lifting locations meet the 10 CFR 71.45(a) requirement.

In the past, some N-55 overpacks exhibited a loosening of the rivets used to secure the lift lugs to the overpack. To avoid the problem, the lugs are not used to lift the entire package. In place of the lifting lugs, an arrangement was designed for use in both tying down and lifting the package. The lifting and tiedown yoke arrangements (drawing H-2-99129 in Part A, Section 10.1) has been shown to meet the lifting arrangement. The arrangement

is used when lifting the package onto and off of the transporter (Part B, Section 6.1.2).

There are no tiedown devices that are a structural part of the package. The tiedown method used is evaluated in Part B, Section 10.0.

7.2.9 Brittle Fracture

The Doorstop container and Doorstop sample carriers are made of austenitic stainless steels and lead. The steel remains ductile at -40 °C (-40 °F) [10 CFR 71.71(c)(2)]. Lead is not susceptible to brittle fracture at this temperature. The O-ring for the Doorstop container is fabricated of Neoprene which has a performance temperature range of -55 °C (-67 °F) through 140 °C (284 °F).

7.3 NORMAL TRANSFER CONDITIONS

7.3.1 Conditions to be Evaluated

The NCT per 10 CFR 71 list conditions to be evaluated and their acceptance criteria. The following conditions evaluated are scenarios and tests to simulate the affects NCT have on the package.

- Free drop from 1.2 m (4 ft) onto an unyielding surface in an orientation as to cause maximum damage.
- Vibration normally incident to transportation.
- The application of a uniform load of five times the package weight in the orientation of transport.
- Penetration of a 6 kg (13 lb), 3.2 cm (1.25 in.) diameter rod 101.6 cm (40 in.) onto the package.
- The application of water spray that simulates rainfall of approximately 5.08 cm (2 in.) per hour for a least one hour.

The above loading cases must be applied with both hot and cold environmental conditions, and in combination with the increased and decreased external pressurization.

7.3.2 Acceptance Criteria

Under the NCT listed above, it must be demonstrated that the Doorstop container maintains the containment leak rate to 5.81×10^{-5} std-cc/s or less, and shielding of the radioactive material sample.

Criteria based on the NRC Regulatory Guides require the Doorstop container stresses to remain elastic, with adequate safety margins. The allowable stresses were determined per the ASME BPVC, Section II.

7.3.3 Structural Model

Conservative, classical methods of analysis were used to evaluate the stresses induced in the Doorstop container during NCT. Classical modeling techniques were also used in conjunction with the analytical methods. Free body diagrams and text throughout the analyses (Part B, Section 7.6) explain how each type of loading was modeled and evaluated. Cask drop models (PacTec) were used to determine the *g*-loading based on the crush from the 9 m (30 ft) drop testing. Although, the 9 m (30 ft) drop is an accident condition, it is a worst-case drop and therefore is used to demonstrate the 1.2 m (4 ft) requirement is met.

7.3.4 Initial Conditions

The Doorstop Sample Carrier System was evaluated per 10 CFR 71 conditions (NuPac 1987) and Hanford Site conditions (Part B, Section 8.0). The initial condition stresses due to thermal loading are added to the NCT.

Per 10 CFR 71, the initial conditions for NCT for analysis are defined as ambient temperatures between -40 °C (-40 °F) and 37.3 °C (100 °F). Hanford ambient temperatures are between and -32.7 °C (-27 °F) and 46.11 °F (115 °F). The initial internal pressure within the containment system must be considered to be the maximum normal operating pressure, unless a lower internal pressure consistent with the ambient temperature considered to precede and follow the test is more unfavorable.

7.3.4.1 Environmental Heat Loading.

7.3.4.1.1 Hot. The "hot" heat loading required to be evaluated for onsite packages is at 46.1 °C (115 °F) in still air with solar insolation.

The maximum Doorstop container seal temperature due to insolation and decay heat is 139 °C (282 °F). Stresses in the wall of the Doorstop container are negligible due to this temperature rise.

7.3.4.1.2 Cold. The "cold" heat loading required to be evaluated for onsite packages is at -32.77 °C (-27 °F) in still air and shade.

The temperatures of the Doorstop container will reach -32.77 °C (-27 °F) during steady state for this condition. Stresses due to this temperature are also negligible in the Doorstop container.

7.3.4.2 Maximum Pressure Stresses. Calculations and testing were performed to determine resulting stresses encountered on the end plate, cylinder wall, and welds of the Doorstop Container when subjected to a reduced external pressure of 3.5 psa absolute (Part B, Section 7.6.1.3). All results of calculations show a large margin of safety over the allowable limits.

Calculations were performed to determine pressure encountered on the Doorstop Container end plate, cylinder walls, and welds if subjected to an increased external pressure of 20 psi (Part B, Section 7.6.1.3). All results were found to provide a large margin of safety over the allowable limits.

7.3.5 Structural Evaluations and Conclusions

7.3.5.1 Free Drop. The Doorstop Sample Carrier System drop analysis is evaluated by comparison and analysis to the Sample Pig Transport System. The only difference in the configuration between these two containers is the internals of the DOT 208-L drum. Doorstops as compared to the Pig Shipping Container. The Sample Pig Transport System was dropped from a height of 30 ft in several orientations onto a hard unyielding surface (WHC 1995). After the package was dropped, the Sample Pig Shipping Container was leak tested (WHC 1995) and met the requirements for leaktight given in ANSI 14.5 of 1×10^{-7} std-cc/s. The Doorstop container is evaluated to be capable of maintaining containment when subjected to the force calculated to be experienced during drop testing. The forces were identified by evaluating the damage observed during testing of the Sample Pig Transport System. That damage was used to back calculate the force that would be experienced by the Doorstop container if the Doorstop Sample Carrier System was subjected to the test. The results of the evaluation support the conclusion that the Doorstop container will maintain containment if subjected to the test.

7.3.5.2 Vibration. The N-55 overpack is certified by the NRC, showing that it will sustain vibration under normal conditions. An evaluation of the screw top lid of the Doorstop container for NCT vibration loading was performed (Part B, Section 7.6.1.6) to demonstrate there is no unwinding of the lid or thread fatigue concerns during transport. The evaluation shows that no unwinding of the lid occurs, as demonstrated by the positive torque required for counter rotation of the lid. Also, the evaluation shows that fatigue failure of the lid threads is not a concern due to negligible vibrational stresses imposed on the threads.

7.3.5.3 Compression. The N-55 overpack will support a uniformly distributed load, equal to five times its fully loaded weight, or 1,700 kg (3,750 lb), without generating stress in any packaging material in excess of its yield strength (NuPac 1987). Five times the allowable weight of the Doorstop Sample Carrier System is 1621 kg (3,575 lb). Therefore this requirement is met.

7.3.5.4 Penetration. A 6 kg (13 lb) rod dropped from a height of 102 cm (40 in.) has negligible effect on the N-55 overpack (NuPac 1987).

7.3.5.5 Water Spray. The surface of the overpack is galvanized steel and will not be adversely affected by water. There are no places on the overpack where water could collect, freeze, and potentially damage the overpack. The N-55 overpack is certified under the NRC to provide protection for this requirement.

7.4 ACCIDENT CONDITIONS

7.4.1 Conditions to be Evaluated

HAC per 10 CFR 71 list conditions to be evaluated and their acceptance criteria. For HAC, the evaluation is based on the sequential loading scenarios listed below:

- Free drop from 9 m (30 ft) onto an unyielding surface with the cask oriented in such a way as to cause the worst damage.
- Puncture drop of the cask 101 cm (40 in.) onto a 15.24 cm (6 in.) diameter bar.
- Exposure of the package to a 801.67 °C (1475 °F) fire for 30 minutes.

The above loading cases must be applied with the previous evaluated initial condition stresses.

7.4.2 Acceptance Criteria

Under the HAC listed above, it must be demonstrated that the Doorstop Sample Carrier System maintains containment and shielding of the samples.

Criteria taken from the NRC Regulatory Guides requires the Doorstop Container stresses not to exceed the allowables in the area of containment closures. Stress allowables used are from ASME BPVC, Section II.

Leak testing after drop testing must meet a leak rate of 1.04×10^{-1} cc/sec, air or less.

7.4.3 Structural Model

Classical modeling techniques were used for the thread evaluations and the CASKDROP (PacTec) finite element modeling program was used for the *g*-loading evaluation.

7.4.4 Initial Conditions

Initial conditions required for HAC per 10 CFR 71 are identical to those required by NCT.

7.4.4.1 Heat Loading. The heat loading during the impact scenarios also coincides with the NCT. Stresses related to the fire temperature loading on the cask are negligible (Part B, Section 8.0). The fire accident condition temperatures do not affect the material nor add any additional stresses to evaluate.

7.4.4.2 Maximum Pressure Stresses. The maximum pressure stresses are the same as the maximum pressure stresses for NCT.

7.4.5 Structural Evaluation and Conclusions

The Doorstop Sample Carrier System has been demonstrated by verification analysis to the Sample Pig Transport System drop testing to maintain containment after HAC.

7.4.5.1 Free Drop. The Doorstop Sample Carrier System drop analysis is performed in Part B, Section 7.6.1.4. The Doorstop container is evaluated to be capable of maintaining containment when subjected to the force calculated to be experienced during drop testing. The forces were identified by evaluating the damage observed during testing of the Sample Pig Transport System. The damage was used to back calculate the force that would be experienced by the Doorstop container if the Doorstop Sample Carrier System was subjected to the test. The results of the evaluation support the conclusion that the Doorstop container will maintain containment if subjected to the test.

7.4.5.2 Crush. Authorized radioactive contents are limited to less than 1000 A_2 not as special form radioactive material; therefore, the crush test does not apply.

7.4.5.3 Puncture. The N-55 overpack successfully passed the puncture test when tested by Nuclear Packaging, Inc. for certification of Type B solids (NuPac 1987). Effects to the Doorstop container would be negligible, and less severe than caused by the 9 m (30 ft) drop.

7.4.5.4 Thermal. The ability of the package to retain its contents and provide adequate shielding through the HAC thermal event is demonstrated in Part B, Section 8.0. The maximum temperature of 122 °C (251 °F) that the Doorstop container seal reaches occurs after the fire is extinguished. This temperature is lower than the 139 °C (282 °F) that the Doorstop container seal (containment boundary) reaches during NCT; therefore, the stresses will be less.

7.4.5.5 Immersion - Fissile Material. Authorized contents for the Doorstop Sample Carrier System include only materials exempt from fissile material classification (10 CFR 71.53); therefore, this immersion does not apply.

7.4.5.6 Immersion - All Packages. Water immersion has no effect on the overpack; therefore, it will have no effect on the packaging system (NuPac 1987).

7.5 REFERENCES

10 CFR 71, 1995, "Packaging and Transportation of Radioactive Material," *Code of Federal Regulations*, as amended.

49 CFR 173, 1995, "Transportation," *Code of Federal Regulations*, as amended.

ANSI, 1987, *American National Standard for Radioactive Materials - Leakage Tests on Packages for Shipment*, American National Standards Institute, Inc., New York, New York.

ASME, 1995, *American Society of Mechanical Engineers Boiler and Pressure Vessel Code*, Section II, American Society of Mechanical Engineers, New York, New York.

NRC, 1987, *Certificate of Compliance for the NuPac Model N-55 Overpack*, CoC Number 9070, Docket Number 71-9070, U.S. Nuclear Regulatory Commission, Washington, D.C.

NuPac, 1987, *Application for NRC Certificate of Compliance Authorizing Shipment of Nuclear Materials in NuPac Model N-55 Packaging*, Federal Way, Washington.

WHC-CM-2-14, *Hazardous Material Packaging and Shipping*, Westinghouse Hanford Company, Richland, Washington.

7.6 APPENDICES

7.6.1 Design Calculations

7.6.1.1 Weights and Center of Gravity Calculation. The design weight and vertical center of gravity location of the Doorstop Sample Carrier System are shown below. The Doorstop configuration consists of seven Doorstop packages and their containers placed in a polystyrene spacer assembly. This assembly is contained in the 55-gallon drum which is the inner portion of the N-55 overpack system. Figure B7.6.1.1-1 gives the general arrangement of the package configuration with associated dimensions. Table B7.6.1.1-1 contains detailed weight and dimensional data from which the package center of gravity was calculated. The center of gravity dimension, Y_{CG}, becomes:

$$Y_{CG} = 21.7 \text{ in.}$$

Figure B7.6.1.1-1. Doorstop Container Arrangement.

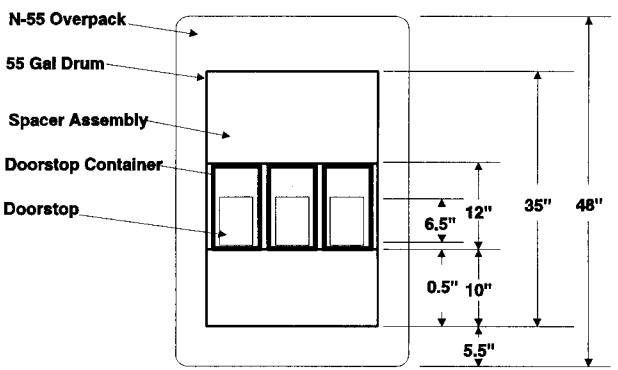

For the loading conditions to be evaluated, the weight of the tiedown frame must also be included in the center of gravity determination, since the acceleration experienced by the N-55 will be experienced by the frame.

The frame is made up of 3 x 2 rectangular structural tubing (0.25 in. wall thickness) with four J bolts and four eye bolts attached to the frame ends. Total weight of the tiedown frame is approximately 60 lb with its center of gravity 1.5 in. above the bottom of the frame beams. The moment to be added to the above calculations is:

(48 *in.* + 1.5 *in.*)(60 *lb*) = 2970 *in-lb*

The vertical center of gravity dimension, Y_{CG}, when the frame is included in the calculation becomes:

$$Y_{CG} = 23.86 \text{ in.}$$

Table B7.6.1.1-1. Vertical Center of Gravity Location, Doorstop Sample Carrier System.

Component	Weight (lb)	Distance from base (in.)	Moment
N-55 overpack	200.0	24.0	4800.0
17H 55-gallon drum	55.0	23.0	1265.0
Spacer assembly	12.0	23.0	276.0
Doorstop containers (seven)	224.0	21.8	4872.0
Doorstops (seven)	224.0	19.3	4312.0
Totals	715.0	-----	15525.0
Center of gravity dimension (in.)			21.7

7.6.1.2 Lifting Analysis. The N-55 package containing the Doorstop Sample Carrier System is lifted onto its transport vehicle by a lift assembly. The lifting portions of the assembly include the frame and J-bolts which are used to lift the upper half of the overpack. The lifting loads and stresses are determined below.

7.6.1.2.1 Lifting Devices. The tiedown frame can be used to lift the assembled N-55 package when loading or unloading the transport vehicle. The frame is attached to the N-55 lifting lugs by four J-bolts which bolt to the ends of the frame. However, the J-bolts are used only to lift the top of the overpack during loading and unloading operations. The maximum load on each J-bolt is 100/2 = 27.73 kg (50 lb). A loaded package could be lifted using straight rods with clevis ends in place of the J-bolts. The following analysis shows that the frame assembly is adequate to lift a loaded overpack.

The lifting load is conservatively assumed to be carried by two of the four bolt and clevis assemblies. The load per bolt is then

$$W_b = \frac{800}{2} = 181.82\ kg\ (400\ lb)$$

This load is carried through the frame arms to the lifting U bolt welded to the center of the frame.

The lifting induced stresses are calculated below and are to be compared with manufacturer's working load limits for lifting hardware. These are normally 1/5 of breaking loads. For the tiedown frame, the working load limit is considered to be the lesser of 1/3 of material yield stress or 1/5 of material ultimate stress. A Safety Margin, SM, will be calculated to evaluate all stress calculations against the above allowables.

$$SM = lesser\ of:\ \frac{0.2F_U}{f}\ \ or\ \ \frac{0.33F_Y}{f}$$

The frame is constructed of 3 x 2 structural tubing using A500 Grade B steel. Wall thickness of the tubing is 0.64 cm (0.25 in.). Material yield stress, F_y, is 290 MPa (42,000 psi) and ultimate stress, F_u, is 400 MPa (58,000 psi). A-36 steel is used for other parts of the tiedown assembly. F_y is 248 MPa (36,000 psi) and F_u is 400 MPa (58,000 psi).

Based on the loads given above and the loading geometry, the lifting load is considered to be the worst case for the tiedown frame. Lifting analyses for individual portions of the tiedown frame are given below.

7.6.1.2.2 J-bolt. The J-bolts are constructed of A-36 ½ in. diameter rod. The J bend at the end of the bolt has an inside radius of ½ in. The load per rod, W_R, is assumed to be a maximum of 23 kg (50 lb) as shown above. The J-bolts are not used to lift a loaded overpack. Calculating the tensile stress in the bolt, the minimum tensile area of the bolt is 0.9155 cm^2 (0.1419 in^2) at the threaded portion of the bolt (½ in.-13UNC)

$$f_t = \frac{W_R}{A} = \frac{50}{0.1419} = 2.4\ MPa\ (352\ psi)$$

$$SM = \frac{11,600}{352} = 16.46$$

NOTE: The straight bolt which could replace the J-bolt for lifting the loaded assembly would be the same diameter as the J-bolt. Since it would experience a 182 kg (400 lb) load rather than a 23 kg (50 lb) load, its Safety Margin would be 1/8 that of the J-bolt or 2.06.

The N-55 lifting lug is assumed to load the rod at the center of the curved portion of the "J." This results in a moment which can be assumed constant along the length of the bolt including the threaded portion (if any) below the nut and washer on the top surface of the frame. This is because the bolt hangs from the nut and passes through a hole in the lower frame which is considerably larger than the bolt diameter. The moment arm from the center of the lifting lug to the centerline of the bolt is

$$L_m = 0.5 + \frac{0.5}{2} = 1.9\ cm\ (0.75\ in.)$$

The section modulus of the bolt at the threaded area is

$$S = \frac{\pi d^3}{32} = \frac{\pi (0.425)^3}{32} = 0.123\ cm^3\ (0.0075\ in^3)$$

where d is based on the tensile area given above.

The bending stress becomes:

$$S_b = \frac{M_b}{S} = \frac{50(0.75)}{0.0075} = 34\ MPa\ (5,000\ psi)$$

Combining the tensile stress with the tensile portion of the bending stress results in a total tensile stress of:

$$eS_T = S_t + S_b = 352 + 5,000 = 36\ MPa\ (5,352 psi)$$

If the moment can be shown not to reach the threaded portion of the bolt, the highest stress area of the bolt is at the transition from the curved "J" to the straight shank of the bolt. The tensile area of the bolt at this location is 2.74 cm^2 (0.425 in^2) giving a tensile stress of:

$$f_t = \frac{W_R}{A} = \frac{50}{0.1963} = 1.8\ MPa\ (255\ psi)$$

Conservatively using a correction factor for curved beams from *Formulas for Stress and Strain* (Roark and Young 1975), Table 16, Case 2 with R/c = 0.75/0.25 =3.0, k_i = 1.332 the bending stress becomes:

$$S_b = k_i \frac{M_b}{S} = 1.332 \frac{50\,(0.75)}{0.0123} = 28\,MPa\ (4,061 psi)$$

Combining the tensile stress with the tensile portion of the bending stress results in a total tensile stress of:

$$S_T = S_t + S_b = 255 + 4,061 = 30\,MPa\ (4,316 psi)$$

Minimum Safety Margin from the two calculations shown above:

$$SM = \frac{\frac{58,000}{5}}{5,352} = 2.17$$

Therefore, the J-Bolts meet 1/5 of S_u by having a positive safety margin.

The J-Bolts are also evaluated as shown in Section 7.6.1.2.7 to meet the *Hanford Site Hoisting and Rigging Manual* (RL 1993).

7.6.1.2.3 Frame. The lifting load is carried from the frame ends where the bolts attach to the center lifting bail as shown in Figure B7.6.1.2-1 below. The maximum moment in the frame is:

$$M_F = W_R l_f = 400(16.5) = 746\,N\text{-}m\ (6,600\,in\text{-}lb)$$

The structural tubing has a section modulus, S_x, of 9.48 cm^3 (1.47 in^3). The maximum bending stress is then:

$$f_b = \frac{M_F}{S_y} = \frac{6,600}{1.47} = 31\,MPa\ (4,490 psi)$$

$$SM = \frac{11,600}{4,490} = 2.58$$

Therefore, the frame meets 1/5 S_u by having a positive safety margin.

7.6.1.2.4. Lifting Bail. The lifting bail is a U-bolt constructed of 3/4 in. rod with an inside diameter of 2 in. The radius of the centerline of the bail, R, is then 1.375 in. The U-bolt material is A-36 steel.

Figure B7.6.1.2-1. Tiedown Frame.

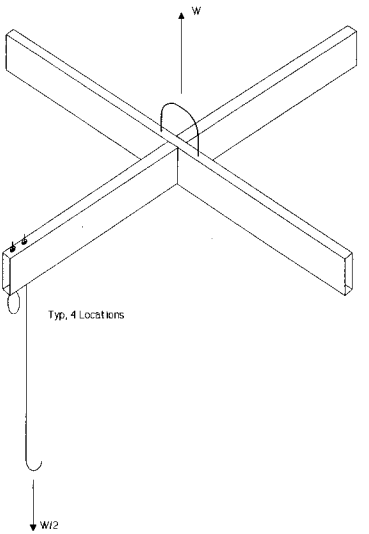

The U-bolt can be considered as ½ of a chain link with a central stud joining the two sides of the link. This configuration is analyzed by *Practical Stress Analysis in Engineering Design* (Blake 1960). The maximum bending moment occurs at the point of loading.

$$M_0 = \frac{WRC_1}{2}$$

Where C_1 is a function of the ratio L/R.

$$C_1 = \frac{(k+2)\,[k^3+6k^2+12k(4-\pi)+48(\pi-3)]}{k^4+4\pi k^3+48k^2+24\pi k+24(\pi^2-8)}$$

where k = L/R.

Substituting k = 2.5/1.375 = 1.818 gives C_1 = 0.459 and thus the maximum moment becomes:

$$M_0 = \frac{800(1.375)(0.459)}{2} = 28.5 N\text{-}m \ (252.5 in\text{-}lb)$$

Similarly, a tensile load, H, is produced at the point of loading

$$H = \frac{WC_2}{2}$$

where C_2 is given by:

$$C_2 = \frac{12(k+2)[(\pi-2)k+2(4-\pi)]}{k^4+4\pi k^3+48k^2+24\pi k+24(\pi^2-8)}$$

Substituting gives C_2 = 0.407 and the tensile load becomes:

$$H = \frac{800(0.407)}{2} = 724 N \ (162.8 lb)$$

At the point of loading, on the outer surface the maximum tensile stress is due to both the tensile loading, H, and the moment, M_0. The stress due to H is:

$$S_t = \frac{H}{A} = \frac{162.8}{0.442} = 2.5 MPa \ (368.5 psi)$$

The bending stress can be calculated for a curved beam using *Formulas for Stress and Strain* (Roark and Young 1975) Table 16, Case 2 with R/c = 3.67. The correction factor for the inner surface is by interpolation, k_i = 1.24. The section modulus of the bail is:

$$S_x = \frac{\pi d^3}{32} = 0.678 \ cm^3 \ (0.0414 \ in^3)$$

The bending stress on the inner surface of bail (compressive) is:

$$f_b = k_i \frac{M_b}{S} = 1.24 \frac{252.5}{0.0414} = 52 MPa \ (7,560 psi)$$

The sum of the tensile stress and the compressive bending stress is:

$$S_T = S_t + S_b = 369 + -7,560 = -49.6 MPa \ (-7,191 psi)$$

The tensile stress in one of the bail legs is:

$$f_t = \frac{(0.5 W_b)}{A_w} = \frac{400}{\pi (0.375)^2} = 6.2 MPa \ (905 psi)$$

The maximum moment in the bail leg is at the frame connection and can be calculated using Equation 29.11b of *Practical Stress Analysis in Engineering Design* (Blake 1960).

$$M = M_0 - \frac{WR}{2} + H(R+x) = 252.5 - \frac{800\,(1.375)}{2} + 162.8\,(1.375+1.25) = 15 N\text{-}m \ (:$$

Bending stress is:

$$f_b = \frac{M_b}{S} = \frac{130}{0.0414} = 21.6 MPa \ (3,136 psi)$$

Combining the tensile portion of the bending stress and the stress due to the tensile load:

$$f_b + f_t = 3,136 + 905 = 28 MPa \ (4,041 psi)$$

From above the maximum stress in the bail occurs at the point of loading. The Safety Margin is:

$$SM = \frac{\frac{58,000}{5}}{7,191} = 1.61$$

Therefore, the bail meets the requirements.

7.6.1.2.5 Frame Welds. Two opposing frame arms are welded to the tube section which forms the other two arms. The attaching welds are continued completely around the attaching tube section. Assume the weld forms a 5.0 cm x 7.6 cm (2 in. x 3 in.) box section with a wall thickness of 0.48 cm (3/16 in.). Treating the weld as a line the effective section modulus of the weld is:

$$S_w = bd + \frac{d^2}{3} = (2.1875)(2.8125) + \frac{(2.8125)^2}{3} = 56.7 cm^2 \ (8.789 in^2)$$

where b and d are the width and height of the section at the centerline of the weld line. The effective shear area of the weld is:

$$A_w = 2bd = 2(2.1875)(2.8125) = 61.74 cm^2 \ (9.57 in^2)$$

Using a bending moment of 746 N-m (6,600 in-lb) and a shear load of 1,779 N (400 lb), the weld loading becomes:

$$f_w = \left[\left(\frac{400}{9.57}\right)^2 + \left(\frac{6,600}{8.789}\right)^2\right]^{0.5} = 132\,kN/m\ (752\,lb/in)$$

The allowable weld load for a 0.48 cm (3/16 in.) weld is:

$$\tau_w = (0.6)(0.1875)(.707)\left(\frac{58,000}{5}\right) = 161\,kN/m\ (923\,lb/in)$$

$$SM = \frac{923}{752} = 1.23$$

The lifting bail is welded to the top surface of the frame using to 0.64 cm (1/4 in.) fillet welds around the base of each leg of the bail. The bail is constructed of 1.9 cm (3/4 in.) A-36 rod. The weld length around one of the legs is:

$$l_w = 0.75\pi = 6\,cm\ (2.36\,in.)$$

The weld load is:

$$f_w = \frac{0.5\,W_b}{l_w} = \frac{430}{2.36} = 32\,kN/m\ (182.2\,lb/in)$$

The allowable weld load is:

$$\tau_w = (0.6)(0.25)(0.707)\left(\frac{58,000}{5}\right) = 215\,kN/m\ (1,230\,lb/in)$$

$$SM = \frac{1,230}{182.2} = 6.75$$

7.6.1.2.6 References.

Blake, Alexander, 1960, *Practical Stress Analysis in Engineering Design*, Second Edition, Marcel Dekker, Inc., New York, New York.

RL, 1993, *Hanford Site Hoisting and Rigging Manual*, DOE-RL-92-36, U.S. Department of Energy, Richland Operations Office, Richland, Washington.

Roark, R. J., and W. C. Young, 1975, *Formulas for Stress and Strain*, Fifth Edition, McGraw Hill Book Company, New York, New York.

7.6.1.3 Reduced and Increased External Pressure Evaluation.

ENGINEERING SAFETY EVALUATION

Subject: Reduced and Increased External Pressure Evaluation- Doorstop Container Page: 1 of 10
Originator: S. S. Shiraga Date: 01/16/97
Checker: R. J. Smith Date: 01/23/97

I. Objective:

The objective of this evaluation is to evaluate the Doorstop Containers for reduced and increased external pressurization for the normal transport conditions (NTC).

II. References:

ASME, *Boiler and Pressure Vessel Code*, Section III, Appendices, American Society of Mechanical Engineers, New York, New York, 1992.

ASME, *Boiler and Pressure Vessel Code*, Section II, Part D, American Society of Mechanical Engineers, New York, New York, 1995.

RHO, Drawing No. H-2-73008, Rev 2, *Door Stop Container*, Rockwell Hanford Operations, Richland, Washington, 1978.

III. Results and Conclusions:

The analysis evaluates the doorstop container as a cylindrical shell with flat head closure ends. The stresses due to pressure at the joints for the shell to the flat heads are evaluated in accordance with ASME Section III, Appendices, Articles A-2000, A-5000, and A-6000. The container is conservatively evaluated as a smooth bore cylinder, the additional material of the closure lid is ignored.

As demonstrated by the evaluation, the stresses from the worst case of reduced external pressure are insignificant. The case of increased external pressure is not evaluated since the pressure is much lower and for cylindrical shells external and internal pressures are evaluated in the same manner. Therefore, the Doorstop Container withstands the affects of both reduced and increased external pressures.

ENGINEERING SAFETY EVALUATION

Subject: Reduced and Increased External Pressure Evaluation- Doorstop Container Page: 2 of 10
Originator: S. S. Shiraga Date:01/16/97
Checker: R. J. Smith Date:01/23/97

IV. Evaluation:

Doorstop Container NTC Pressure Evaluation:

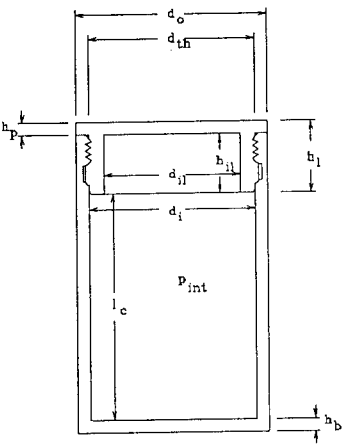

Nominal dimensions (RHO 1978):

Outside diameter of shell:

$d_o = 6.38 \cdot in$

Inside diameter of shell:

$d_i = 5.50\,in$

Wall thickness of shell:

$t_w := \frac{d_o - d_i}{2}$ $t_w = 0.44 \cdot in$

Outside radius of shell:

$r_o := \frac{d_o}{2}$ $r_o = 3.19 \cdot in$

Inside radius of shell:

$r_i := \frac{d_i}{2}$ $r_i = 2.75 \cdot in$

Height of lid: $h_l := 1.5 \cdot in$ Thickness of bottom plate: $h_b := 0.5 \cdot in$

Thickness of top plate: $h_p := h_l - (0.817 + 0.38) \cdot in$ $h_p = 0.3 \cdot in$

Inside diameter of lid: $d_{il} := 5.12\,in$ Inside length of shell: $l_c := (9.88 - 1.004) \cdot in$ $l_c = 8.88 \cdot in$

Ambient pressure differentials specified in 10 CFR 71:

Reduced external pressure: $p_{rep} := 3.5 \cdot psi$ Increased external pressure: $p_{iep} := 20 \cdot psi$

Worst case NCT internal temperature in °F (Part B, Section 8.0), assumed as operating: $t_{in} := 282$

Pressure from gas generation (Part B, Section 3): $p_{gas} := 4.24\,psi$

Assumed atmospheric temperature and pressure at loading: $t_{atm} := 70$ $P_{atm} := 1 \cdot atm$

ENGINEERING SAFETY EVALUATION

Subject: Reduced and Increased External Pressure Evaluation- Doorstop Container Page: 3 of 10
Originator: S. S. Shiraga Date:01/16/97
Checker: R. J. Smith RJS Date:01/23/97

Internal pressure inside container at operating temperature and pressure:

$$p_{int} := \left(\frac{t_{in} + 460}{t_{atm} + 460}\right) \cdot \left(P_{atm} + P_{gas}\right) \qquad p_{int} = 26.51 \cdot psi$$

Differential pressures:

Reduced external pressure: $\Delta p_{rex} := p_{int} - p_{rep}$ $\Delta p_{rex} = 23.01 \cdot psi$

Increased external pressure: $\Delta p_{iex} := p_{int} - p_{iep}$ $\Delta p_{iex} = 6.51 \cdot psi$

Since reduced external pressure results in largest differential, evaluate for reduced external pressure. Idealize as cylinderical shell with closed ends under internal pressure.

Doorstop Container Material properties for ASTM A-312, 304L stainless steel (ASME Section II, Part D, VIII-1) at 300°F:

RT yield strength (page 95): $s_y := 25 \cdot ksi$ RT ultimate strength (page 95): $s_u := 70 \cdot ksi$

Allowable membrane stress (page 96): $s_m := 15.3 \cdot ksi$ Poisson's ratio: $\nu_{sst} := 0.29$

Elastic modulus (614): $E_{sst} := 27 \cdot 10^6 \cdot psi$

Determine stresses in the shell away from discontinuities (ASME Section III, Article-2000, page 462):

Ratio of outside radius to inside radius: $Y := \frac{r_o}{r_i}$ Mean radius of shell: $r_m := r_i + \frac{1}{2} t_w$

Ratio of outside radius to intermediate radius: $Z := \frac{r_o}{r_m}$

Stiffness of shell: $D_{sh} := \frac{E_{sst} \cdot t_w^3}{12 \cdot \left(1 - \nu_{sst}^2\right)}$ Shell factor: $\beta := \left[\frac{3 \cdot \left(1 - \nu_{sst}^2\right)}{r_m^2 \cdot t_w^2}\right]^{\frac{1}{4}}$

Principle stresses in shell:

Hoop: $\sigma_{st} := \Delta p_{rex} \frac{1 + Z^2}{Y^2 - 1}$ $\sigma_{st} = 143 \cdot psi$

Longitudinal: $\sigma_{sl} := \frac{\Delta p_{rex}}{Y^2 - 1}$ $\sigma_{sl} = 67 \cdot psi$

ENGINEERING SAFETY EVALUATION

Subject: Reduced and Increased External Pressure Evaluation- Doorstop Container Page: 4 of 10
Originator: S. S. Shiraga Date: 01/16/97
Checker: R. J. Smith RJS Date: 01/23/97

Radial: $\sigma_{sr} := \Delta p_{rex} \cdot \frac{1 - Z^2}{Y^2 - 1}$ $\sigma_{sr} = -10 \cdot psi$

General primary membrane stress intensity: $\sigma_{spr} := \left(\frac{\Delta p_{rex} \cdot r_i}{t_w} \right) + \frac{\Delta p_{rex}}{2}$ $\sigma_{spr} = 155 \cdot psi$

Primary plus secondary: $\sigma_{sps} := \frac{2 \cdot \Delta p_{rex} \cdot Y^2}{Y^2 - 1}$ $\sigma_{sps} = 179 \cdot psi$

Margins of Safety on Shell:

Primary membrane: $MS_{shp} := \frac{s_m}{\sigma_{spr}} - 1$ $MS_{shp} = 97.5$

Primary plus secondary: $MS_{shs} := \frac{3 \cdot s_m}{\sigma_{sps}} - 1$ $MS_{shs} = 255.16$

Determine discontinuity stresses at ends ASME Section III, Appendix, Article A-6000:

Shell characteristic length: $\frac{3}{\beta} = 2.66 \cdot in$ Since this is less than l_c

$B_{11} := 1$ $B_{12} := 1$ $B_{22} := 1$ $G_{11} := 0$ $G_{12} := 0$ $G_{22} := 0$

For simplicity and conservatism, idealize as a long shell of uniform thickness, with two different closed ends.

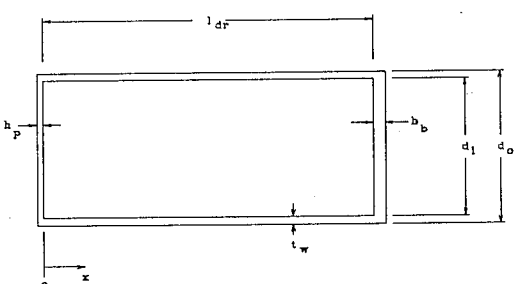

ENGINEERING SAFETY EVALUATION

Total internal length: $l_{dr} := 9.88\,in$

Radial displacement and rotation at 0, top end plate:

Top plate geometric constants ASME Section III, Appendix, Article A-5000:

Plate factor: $f_{tp} := \frac{h_p}{r_o}$

$$F_{t1} := \frac{3\cdot(1-\nu_{sst})\cdot(2-f_{tp}^2)\cdot(1-f_{tp})^2\cdot[8-f_{tp}\cdot(4-f_{tp})\cdot(1-\nu_{sst})]}{16\cdot(2-f_{tp})}$$

$$F_{t2} := \frac{3}{8}\cdot(1-f_{tp})^2\cdot\left[(1-\nu_{sst})\cdot(2-f_{tp}^2)+4\cdot(1+\nu_{sst})\cdot\left(1+2\cdot\ln\left(\frac{2-f_{tp}}{2-2\cdot f_{tp}}\right)\right)\right]$$

$$F_{t3} := \frac{3}{8}\cdot(1-\nu_{sst})\cdot(2-f_{tp})\cdot[8-f_{tp}\cdot(4-f_{tp})\cdot(1-\nu_{sst})]$$

$$F_{t4} := \frac{1}{8}\cdot[8-f_{tp}\cdot(4-f_{tp})\cdot(1-\nu_{sst})]$$

Rotation due to pressure of the top plate: $\theta_{tpp} := \frac{F_{t1}}{E_{sst}\cdot\left(\frac{h_p}{r_m}\right)^3}\cdot\Delta p_{rex}$

Displacement due to pressure of the top plate: $\delta_{tpp} := -\left(\frac{h_p}{2}\right)\cdot\theta_{tpp}$

Radial displacement and rotation at L, bottom end plate:

Bottom plate geometric constants ASME Section III, Appendix, Article A-5000:

Plate factor: $f_{bp} := \frac{h_b}{r_o}$

$$F_{b1} := \frac{3\cdot(1-\nu_{sst})\cdot(2-f_{bp}^2)\cdot(1-f_{bp})^2\cdot[8-f_{bp}\cdot(4-f_{bp})\cdot(1-\nu_{sst})]}{16\cdot(2-f_{bp})}$$

$$F_{b2} := \frac{3}{8}\cdot(1-f_{bp})^2\cdot\left[(1-\nu_{sst})\cdot(2-f_{bp}^2)+4\cdot(1+\nu_{sst})\cdot\left(1+2\cdot\ln\left(\frac{2-f_{bp}}{2-2\cdot f_{bp}}\right)\right)\right]$$

ENGINEERING SAFETY EVALUATION

Subject: Reduced and Increased External Pressure Evaluation- Doorstop Container Page: 6 of 10
Originator: S. S. Shiraga Date:01/16/97
Checker: R. J. Smith Date:01/23/97

$$F_{b3} := \frac{3}{8}\cdot(1-\nu_{sst})\cdot(2-f_{bp})\cdot\left[8-f_{bp}\cdot(4-f_{bp})\cdot(1-\nu_{sst})\right]$$

$$F_{b4} := \frac{1}{8}\cdot\left[8-f_{bp}\cdot(4-f_{bp})\cdot(1-\nu_{sst})\right]$$

Rotation due to pressure of the top plate: $\theta_{bpp} := \frac{F_{b1}}{E_{sst}\cdot\left(\frac{h_b}{r_m}\right)^3}\cdot\Delta p_{rex}$

Radial displacement due to pressure of the top plate: $\delta_{bpp} := -\left(\frac{h_b}{2}\right)\cdot\theta_{bpp}$

Radial displacement and rotation of shell, by symmetry the same at both ends:

Rotation due to pressure on shell: $\theta_{sh} := 0$

Radial displacement due to pressure on shell:

$$\delta_{sh} := \Delta p_{rex}\cdot\left[\frac{r_i^2}{E_{sst}\cdot\left(r_o^2-r_i^2\right)\cdot r_m}\right]\cdot\left[r_m^2\cdot(1-2\cdot\nu_{sst})+r_o^2\cdot(1+\nu_{sst})\right] \qquad \delta_{sh} = 0\cdot in$$

Equate the total rotations and radial displacements at each junction and solve for moments and shear forces:

Given

$$\frac{B_{11}}{2\cdot\beta^3\cdot D_{sh}}\cdot Q_o+\frac{B_{12}}{2\cdot\beta^2\cdot D_{sh}}\cdot M_o\ldots = \frac{-2\cdot F_{t3}}{3\cdot E_{sst}\cdot\left(\frac{h_p}{r_o}\right)}\cdot Q_o\ldots$$

$$+\frac{G_{11}}{2\cdot\beta^3\cdot D_{sh}}\cdot Q_1+\frac{G_{12}}{2\cdot\beta^2\cdot D_{sh}}\cdot M_1+\delta_{sh} \qquad +\frac{F_{t3}}{E_{sst}\cdot r_o\cdot\left(\frac{h_p}{r_o}\right)^2}\cdot M_o+\delta_{tpp}$$

ENGINEERING SAFETY EVALUATION

Subject: Reduced and Increased External Pressure Evaluation- Doorstop Container Page: 7 of 10
Originator: S. S. Shiraga Date:01/16/97
Checker: R. J. Smith Date:01/23/97

$$\begin{bmatrix} \frac{B_{12}}{2\cdot\beta^2\cdot D_{sh}}\cdot Q_o + \frac{B_{22}}{\beta\cdot D_{sh}}\cdot M_o \cdots \\ + \frac{G_{12}}{2\cdot\beta^2\cdot D_{sh}}\cdot Q_1 + \frac{G_{22}}{2\cdot\beta\cdot D_{sh}}\cdot M_1 \end{bmatrix} + \theta_{sh} = \frac{F_{t3}}{E_{sst}\cdot r_i\cdot\left(\frac{h_p}{r_o}\right)^2}\cdot Q_o - \frac{2\cdot F_{t3}}{E_{sst}\cdot r_o^2\cdot\left(\frac{h_p}{r_o}\right)^3}\cdot M_o \cdots + \theta_{tpp}$$

$$\frac{G_{11}}{2\cdot\beta^3\cdot D_{sh}}\cdot Q_o + \frac{G_{12}}{2\cdot\beta^2\cdot D_{sh}}\cdot M_o \cdots + \frac{B_{11}}{2\cdot\beta^3\cdot D_{sh}}\cdot Q_1 + \frac{B_{12}}{2\cdot\beta^2\cdot D_{sh}}\cdot M_1 + \delta_{sh} = \frac{-2\cdot F_{b3}}{3\cdot E_{sst}\cdot\left(\frac{h_b}{r_o}\right)}\cdot Q_1 \cdots + \frac{F_{b3}}{E_{sst}\cdot r_o\cdot\left(\frac{h_b}{r_o}\right)^2}\cdot M_1 + \delta_{bpp}$$

$$\begin{bmatrix} \frac{G_{12}}{2\cdot\beta^2\cdot D_{sh}}\cdot Q_o + \frac{G_{22}}{\beta\cdot D_{sh}}\cdot M_o \cdots \\ + \frac{B_{12}}{2\cdot\beta^2\cdot D_{sh}}\cdot Q_1 + \frac{B_{22}}{2\cdot\beta\cdot D_{sh}}\cdot M_1 \end{bmatrix} + \theta_{sh} = \frac{F_{b3}}{E_{sst}\cdot r_i\cdot\left(\frac{h_b}{r_o}\right)^2}\cdot Q_1 - \frac{2\cdot F_{b3}}{E_{sst}\cdot r_o^2\cdot\left(\frac{h_b}{r_o}\right)^3}\cdot M_1 \cdots + \theta_{bpp}$$

Solve simultaneous linear equations:

$Q_o = -24\cdot\frac{lbf}{in}$ $M_o = 18\cdot lbf$ $Q_1 = -22\cdot\frac{lbf}{in}$ $M_1 = 15\cdot lbf$

Determine discontinuity stresses in top plate junction (O):

Total displacement at junction O inside surface ASME 1995, Article A-2243:

$$\delta_{so} := \frac{B_{11}}{2\cdot\beta^3\cdot D_{sh}}\cdot Q_o + \frac{B_{12}}{2\cdot\beta^2\cdot D_{sh}}\cdot M_o + \frac{G_{11}}{2\cdot\beta^3\cdot D_{sh}}\cdot Q_1 + \frac{G_{12}}{2\cdot\beta^2\cdot D_{sh}}\cdot M_1 \qquad \delta_{so} = -6.07\cdot 10^{-6}\cdot in$$

Secondary hoop stress: $\sigma_{soh} := \frac{E_{sst}\cdot\delta_{so}}{r_m} + \frac{6\cdot\nu_{sst}\cdot M_o}{t_w^2}$ $\sigma_{soh} = 106\cdot psi$

Secondary longitudinal stress: $\sigma_{slo} := \frac{6\cdot M_o}{t_w^2}$ $\sigma_{slo} = 557\cdot psi$

ENGINEERING SAFETY EVALUATION

Subject: Reduced and Increased External Pressure Evaluation- Doorstop Container Page: 8 of 10
Originator: S. S. Shiraga Date:01/16/97
Checker: R. J. Smith RJS Date:01/23/97

Secondary radial stress: $\sigma_{sro} := 0 \cdot psi$

Determine secondary stress intensities at junction O:

$s_{1ts} := |\sigma_{soh} - \sigma_{slo}|$ $s_{1ts} = 451 \cdot psi$

$s_{2ts} := |\sigma_{slo} - \sigma_{sro}|$ $s_{2ts} = 557 \cdot psi$

$s_{3ts} := |\sigma_{sro} - \sigma_{soh}|$ $s_{3ts} = 106 \cdot psi$

Margin of Safety at junction L: $MS_{stp} := \frac{3 \cdot s_m}{\sigma_{sps} + s_{2ts}} - 1$ $MS_{stp} = 61.35$

Determine discontinuity stresses in bottom plate junction (L):

Total displacement at junction L inside surface:

$$\delta_{sl} := \frac{G_{11}}{2 \cdot \beta^3 \cdot D_{sh}} \cdot Q_o + \frac{G_{12}}{2 \cdot \beta^2 \cdot D_{sh}} \cdot M_o + \frac{B_{11}}{2 \cdot \beta^3 \cdot D_{sh}} \cdot Q_l + \frac{B_{12}}{2 \cdot \beta^2 \cdot D_{sh}} \cdot M_l \qquad \delta_{sl} = -9.59 \cdot 10^{-6} \cdot in$$

Secondary hoop stress: $\sigma_{slh} := \frac{E_{sst} \cdot \delta_{sl}}{r_m} + \frac{6 \cdot \nu_{sst} \cdot M_l}{t_w^2}$ $\sigma_{slh} = 44 \cdot psi$

Secondary longitudinal stress: $\sigma_{sll} := \frac{6 \cdot M_l}{t_w^2}$ $\sigma_{sll} = 453 \cdot psi$

Secondary radial stress: $\sigma_{srl} := 0 \cdot psi$

Determine secondary stress intensities at junction L:

$s_{1bs} := |\sigma_{slh} - \sigma_{sll}|$ $s_{1bs} = 409 \cdot psi$

$s_{2bs} := |\sigma_{sll} - \sigma_{srl}|$ $s_{2bs} = 453 \cdot psi$

$s_{3bs} := |\sigma_{srl} - \sigma_{slh}|$ $s_{3bs} = 44 \cdot psi$

Margin of Safety at junction L: $MS_{sbp} := \frac{3 \cdot s_m}{\sigma_{sps} + s_{2bs}} - 1$ $MS_{sbp} = 71.56$

ENGINEERING SAFETY EVALUATION

Subject: Reduced and Increased External Pressure Evaluation- Doorstop Container Page: 9 of 10
Originator: S. S. Shiraga Date:01/16/97
Checker: R. J. Smith RJS Date:01/23/97

Determine stresses in top and bottom closure plates ASME Section III, Appendix, Article A-5000:

Assuming the plate is simply supported the maximum primary stresses occur at the center.

Top Plate inside surface: $x_p := -\frac{h_p}{2}$

Radial stress from pressure:

$$\sigma_{prt} := \frac{x_p \cdot \Delta p_{rex}}{h_p \cdot \left(\frac{h_p}{r_o}\right)^2} \cdot F_{t2} \qquad \sigma_{prt} = -2782 \cdot psi$$

Radial stress from edge loads:

$$\sigma 1_{prt} := \frac{Q_o}{h_p} - \frac{12 \cdot x_p}{h_p^3} \cdot M_o \qquad \sigma 1_{prt} = 1096 \cdot psi$$

Hoop stress from pressure:

$$\sigma_{pht} := \frac{x_p \cdot \Delta p_{rex}}{h_p \cdot \left(\frac{h_p}{r_o}\right)^2} \cdot F_{t2} \qquad \sigma_{pht} = -2782 \cdot psi$$

Hoop stress from edge loads:

$$\sigma 1_{pht} := \frac{Q_o}{h_p} - \frac{12 \cdot x_p}{h_p^3} \cdot M_o \qquad \sigma 1_{pht} = 1096 \cdot psi$$

Longitudinal stress from pressure:

$$\sigma_{plt} := \frac{\Delta p_{rex}}{h_p} \cdot \left(x_p - \frac{h_p}{2}\right) \qquad \sigma_{plt} = -23.01 \cdot psi$$

Primary membrane stress intensities at center:

$$s_{1t} := \left|\left(\sigma_{prt} + \sigma 1_{prt}\right) - \left(\sigma_{pht} + \sigma 1_{pht}\right)\right| \qquad s_{1t} = 0 \cdot psi$$

$$s_{2t} := \left|\left(\sigma_{prt} + \sigma 1_{prt}\right) - \sigma_{plt}\right| \qquad s_{2t} = 1663 \cdot psi$$

$$s_{3t} := \left|\sigma_{plt} - \left(\sigma_{pht} + \sigma 1_{pht}\right)\right| \qquad s_{3t} = 1663 \cdot psi$$

Margin of Safety on primary membrane stress of top plate:

$$MS_{tp} := \frac{s_m}{s_{2t}} - 1 \qquad MS_{tp} = 8.2$$

ENGINEERING SAFETY EVALUATION

Subject: Reduced and Increased External Pressure Evaluation- Doorstop Container Page: 10 of 10
Originator: S. S. Shiraga Date:01/16/97
Checker: R. J. Smith Date:01/23/97

Bottom plate inside surface: $x_b := -\frac{h_b}{2}$

Radial stress from pressure:

$$\sigma_{prb} := \frac{x_b \cdot \Delta p_{rex}}{h_b \cdot \left(\frac{h_b}{r_o}\right)^2} \cdot F_{b2} \qquad \sigma_{prb} = -934 \cdot psi$$

Radial stress from edge loads:

$$\sigma 1_{prb} := \frac{Q_1}{h_b} - \frac{12 \cdot x_b}{h_b^3} \cdot M_1 \qquad \sigma 1_{prb} = 307 \cdot psi$$

Hoop stress from pressure:

$$\sigma_{phb} := \frac{x_b \cdot \Delta p_{rex}}{h_b \cdot \left(\frac{h_b}{r_o}\right)^2} \cdot F_{b2} \qquad \sigma_{phb} = -934 \cdot psi$$

Hoop stress from edge loads:

$$\sigma 1_{phb} := \frac{Q_1}{h_b} - \frac{12 \cdot x_b}{h_b^3} \cdot M_1 \qquad \sigma 1_{phb} = 307 \cdot psi$$

Longitudinal stress from pressure:

$$\sigma_{plb} := \frac{\Delta p_{rex}}{h_b} \cdot \left(x_b - \frac{h_b}{2}\right) \qquad \sigma_{plb} = -23.01 \cdot psi$$

Primary membrane stress intensities at center:

$$s_{1b} := \left|\left(\sigma_{prb} + \sigma 1_{prb}\right) - \left(\sigma_{phb} + \sigma 1_{phb}\right)\right| \qquad s_{1t} = 0 \cdot psi$$

$$s_{2b} := \left|\left(\sigma_{prb} + \sigma 1_{prb}\right) - \sigma_{plb}\right| \qquad s_{2b} = 604 \cdot psi$$

$$s_{3b} := \left|\sigma_{plb} - \left(\sigma_{phb} + \sigma 1_{phb}\right)\right| \qquad s_{3b} = 604 \cdot psi$$

Margin of Safety on primary membrane stress of bottom plate:

$$MS_{bp} := \frac{s_m}{s_{2b}} - 1 \qquad MS_{bp} = 24.32$$

7.6.1.4 Drop *g*-loading Evaluation

The Doorstop sample carrier and Doorstop container are carried inside a DOT 17H 55-gallon drum which in turn is contained inside an N-55 overpack. The overpack is used to carry radioactive payloads which can be contained in the 55-gallon drum and result in an assembly gross weight less than 750 lb. The N-55 provides both impact and fire protection because of its layer of foam which completely surrounds the 55-gallon drum.

Two payloads of interest are commonly carried in the N-55 at Hanford. One is the Sample Pig Shipping Container carrying a Sample Pig. The Sample Pig Shipping Container is a shielded container roughly 9 in. in diameter by 13 in. long. The lid/container interface consists of a bolted flange with a sealing O-ring. This container is considered to be the containment boundary. The Sample Pig Shipping Container is surrounded by a drum spacer assembly made of layers of a Celotex-like material. The second payload consists of up to seven Doorstop sample carriers which are each inserted into a Doorstop container. The Doorstop containers are carried in a drum spacer assembly made of expanded polystyrene with plywood sheets above and below the Doorstop containers. The Doorstop containers are roughly 6 in. in diameter and 11 in. long. Each weighs approximately 32 lb. The Doorstop sample carriers each weigh approximately 32 lb.

The Doorstop Sample Carrier System has been shown to meet the drop test requirements of 10 CFR 71 by comparing the System with two similar packages which have successfully passed these tests. First, the N-55 has been successfully drop tested as part of its certification process (NuPac 1987). In these tests, a 55-gallon drum containing sand was used for the payload which resulted in an assembly weight of 750 lb. The tests produced minimal damage to the 55-gallon drum. The lid seal remained intact as shown by a post drop leak test. The second test considered was conducted recently to demonstrate the ability of the Sample Pig Transport System to meet the 10 CFR 71 requirements. The Sample Pig Transport System is similar to the Doorstop Sample Carrier System in that both payloads are carried in a 55-gallon drum contained in an N-55 overpack. In addition, both payloads are positioned inside the drum by a spacer assembly constructed of crushable material. The test consisted of three drops at different orientations from a height of 30 ft. The drop orientations were:

- *End drop*. The centerline of the overpack is vertical at the instant of impact on the overpack end.
- *Side drop*. The centerline of the overpack is horizontal at the time of impact on the side of the overpack.
- *Corner drop*. The center of gravity of the package is directly over the point of impact on the upper "corner" of the overpack. A line connecting the point of impact with the package center of gravity would be vertical at the instant of impact.

The drop test sequence resulted in no visible damage to the Sample Pig Shipping Container. In addition to the visual inspection, the container was leak tested before and after the drop test and met leak rate requirements in both tests.

The N-55 overpack experienced permanent deformation from each of the three drops. Inspection of the spacer assembly inside the 55-gallon drum showed some deformation had also occurred. This damage resulted from the Sample Pig Container crushing some of the material of the spacer assembly around it. Figure B7.6.1.4-1 summarizes the magnitude of the external damage. The amount of deformation can be used to indicate the impact loads experienced by the overpack during the deformation. This analysis is described below.

Figure B7.6.1.4-1. Drop Test Damage.

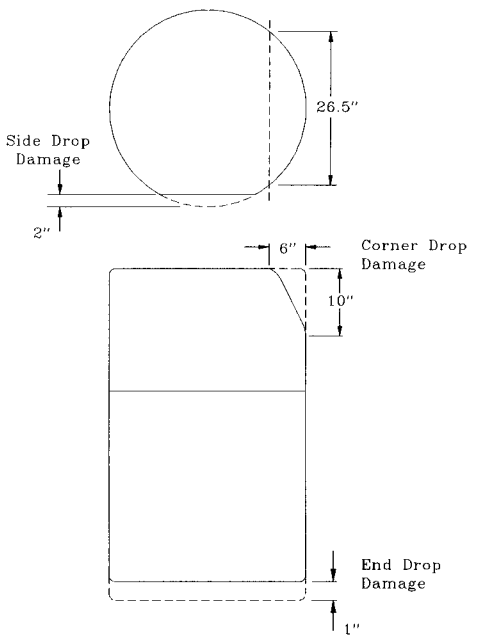

The Sample Pig drop test described in the Sample Pig Transport System SARP (WHC-SD-TP-TR-002, Rev.1) can be used to estimate the impact loads experienced by the Doorstop container. The two packages are similar in that both containment vessels are packaged inside the 55-gallon drum using internal spacer assemblies. The Doorstop uses a spacer assembly made of expanded polystyrene boards ("beadboard") while the Sample Pig is contained in a spacer assembly built of Celotex. Both internal arrangements allow considerable impact energy absorption in addition to that provided by the N-55 foam.

7.6.1.4.1 Side Drop. The Sample Pig internal energy absorption was estimated above to be 47% of the total energy. As mentioned above, this was in addition to the primary impact protection provided by the N-55. If we assume similar impact conditions, a similar logic can be used to estimate the load experienced by the Doorstop container. Table B7.6.1.4-1 shows a CASKDROP analysis for a Doorstop assembly carried in an N-55. If we assume a similar percentage of energy absorbed by the N-55 in this case as in the Sample Pig, we get an energy value of (0.53)(260,000 in-lb) = 137,800 in-lb which corresponds to a deflection of approximately 3.1 in. and an impact deceleration of 154*g*'s. The remaining energy (122,200 in-lb) is then assumed to be absorbed by the spacer assembly inside the 55-gallon drum. Again, assuming a different elastic rebound as was done with the Sample Pig, an energy absorption number for the N-55 becomes 0.66 (260,000 in-lb) = 171,600 in-lb. The corresponding deflection and impact load values (again from Table B7.6.1.4-1) are approximately 3.3 in. and 188*g*'s.

7.6.1.4.2 End Drop. The end drop results from CASKDROP are given in Table B7.6.1.4-2. These results indicate that sufficient foam is available to absorb the impact energy without the internal spacer assembly. If this were to be the case, the resulting impact load is shown as 140.0*g*'s. Using the Sample Pig results and the same elastic crush assumptions as used for the Sample Pig case, an even lower impact load results. For the Sample Pig case using an elastic plus permanent deflection of 1.5 in., (1.45 * 1.0 in.), CASKDROP gave an impact of 138.2*g*'s and 113,568 ft-lb of energy absorbed. This was 49% of the impact energy. Applying this to the Doorstop case, the resulting energy is 0.49 (260,000 in-lb) = 127,400 in-lb. This corresponds to a deflection of approximately 1.7 in. and an impact load of 130*g*'s.

7.6.1.4.3 Corner Drop. The corner drop results from CASKDROP are given in Table B7.6.1.4-3. Again, insufficient foam is available to absorb all of the impact energy. If we assume complete crushing of the available foam in this case, approximately 38% of the impact energy is absorbed. This results in a deflection of 7.3 in. and an impact load of only 52.4*g*'s. The deflection values derived above are perhaps somewhat lower than would actually occur because past testing has shown some damage to the impacted corner of the 55-gallon drum. This would be acceptable in this case since a large amount of spacer material protects the Doorstop containers and since the 55-gallon drum is not required to provide any containment. Even with this possibility, the impact accelerations are quite low for this case and therefore the corner drop is not considered a limiting factor for the design.

Table B7.6.1.4-1. CASKDROP Output, Side Drop.

N-55 Type B Overpack with Sample Pig			
Impact Limiter Weight (each) -	123 lbs	Cask and Payload Weight -	400 lbs
Impact Limiter Outside Diameter -	32.0000 in	Cask Outside Diameter -	25.0000 in
Impact Limiter Overall Length -	24.0000 in	Cask Overall Length -	35.1000 in
Impact Limiter Conical Diameter -	0.0000 in	Dynamic Unloading Modulus -	1.000E+07 lbs/in
Impact Limiter Conical Length -	0.0000 in	Rad Mass Moment of Inertia -	369 lb-in-s²
Impact Limiter End Thickness -	6.5000 in	Frictional Coefficient -	0.0000
Impact Limiter Hole Diameter -	0.0000 in	Drop Height -	30.0000 ft
Impact Limiter Hole Length -	0.0000 in	Drop Angle from Horizontal -	0.0000°
Unbacked Area Threshhold Strain -	0.1000 in/in	Crush Analysis Theory -	Global
Unbacked Area Crush Stress -	87 psi	Number of Integration Incs -	20

POLYFOAM CRUSH STRESS (Axial: "∥" to rise)

Density = 3.000 pcf
Temp = 70.000 °F
σ-yield = 153.2 psi
Bias = 30.000%

ε (in/in)	σ (psi)
0.000	0.0
0.100	153.2
0.200	115.8
0.300	112.2
0.400	110.2
0.500	103.6
0.600	105.6
0.650	114.9
0.700	113.0
0.750	84.9
0.800	121.1

POLYFOAM CRUSH STRESS (Radial: "⊥" to rise)

Density = 3.000 pcf
Temp = 70.000 °F
σ-yield = 86.6 psi
Bias = 30.000%

ε (in/in)	σ (psi)
0.000	0.0
0.100	86.6
0.200	76.6
0.300	79.4
0.400	86.4
0.500	86.2
0.600	96.5
0.650	99.6
0.700	98.6
0.750	118.9
0.800	176.8

POLYFOAM CRUSH STRESS (Actual Data @ 0.0')

Density = 3.000 pcf
Temp = 70.000 °F
σ-yield = 86.6 psi
Bias = 30.000%

ε (in/in)	σ (psi)
0.000	0.0
0.100	86.6
0.200	76.6
0.300	79.4
0.400	86.4
0.500	86.2
0.600	96.5
0.650	99.6
0.700	98.6
0.750	118.9
0.800	176.8

DEFL (in)	MAX ε (%)	AREA (in2)	VOLUME (in3)	XBAR (in)	IMPACT FORCE (lbs)	ACCEL (g's)	I/L MOMENT (in-lbs)	STRAIN ENERGY (in-lbs)	KINETIC ENERGY (in-lbs)	SE/KE RATIO
0.100	2.86	171	11	0.00	2,837	4.4	0	142	232,625	0.00
0.200	5.71	242	32	0.00	7,697	11.9	0	669	232,669	0.00
0.300	8.57	296	59	0.00	13,163	20.4	0	1,712	232,754	0.01
0.400	11.42	341	91	0.00	18,199	28.2	0	3,260	232,818	0.01
0.500	14.28	381	127	0.00	22,090	34.2	0	5,294	232,883	0.02
0.600	17.13	417	167	0.00	24,806	38.4	0	7,639	232,948	0.03
0.700	19.99	449	211	0.00	26,739	41.4	0	10,216	233,012	0.04
0.800	22.84	480	257	0.00	28,495	44.1	0	12,978	233,077	0.06
0.900	25.70	508	307	0.00	30,431	47.1	0	15,924	233,141	0.07
1.000	28.55	535	359	0.00	32,614	50.5	0	19,077	233,206	0.08
1.100	31.41	560	413	0.00	34,972	54.1	0	22,456	233,271	0.10
1.200	34.26	584	471	0.00	37,386	57.9	0	26,074	233,335	0.11
1.300	37.12	606	530	0.00	39,774	61.6	0	29,932	233,400	0.13
1.400	39.97	628	592	0.00	42,065	65.1	0	34,024	233,464	0.15
1.500	42.83	649	656	0.00	44,201	68.4	0	38,337	233,529	0.16
1.600	45.68	670	722	0.00	46,191	71.5	0	42,857	233,594	0.18
1.700	48.54	689	790	0.00	48,116	74.5	0	47,572	233,658	0.20
1.800	51.39	708	860	0.00	50,087	77.5	0	52,483	233,723	0.22
1.900	54.25	726	931	0.00	52,236	80.9	0	57,599	233,787	0.25
2.000	57.10	744	1,005	0.00	54,542	84.4	0	62,938	233,852	0.27
2.100	59.96	761	1,080	0.00	56,964	88.2	0	68,513	233,917	0.29
2.200	62.81	777	1,157	0.00	59,408	92.0	0	74,332	233,981	0.32
2.300	65.67	793	1,236	0.00	61,684	95.5	0	80,366	234,046	0.34
2.400	68.52	809	1,316	0.00	63,664	98.6	0	86,654	234,110	0.37
2.500	71.38	824	1,398	0.00	65,750	101.8	0	93,125	234,175	0.40
2.600	74.23	839	1,481	0.00	68,729	106.4	0	99,849	234,240	0.43
2.700	77.09	854	1,565	0.00	73,534	113.8	0	106,962	234,304	0.46
2.800	79.94	868	1,652	0.00	80,518	124.6	0	114,664	234,369	0.49
2.900	82.80	882	1,739	0.00	89,173	138.0	0	123,149	234,433	0.53
3.000	85.65	895	1,828	0.00	99,062	153.3	0	132,561	234,498	0.57
3.100	88.51	909	1,918	0.00	109,976	170.2	0	143,012	234,563	0.61
3.200	91.36	922	2,010	0.00	121,794	188.5	0	154,601	234,627	0.66
3.300	94.22	934	2,103	0.00	134,373	208.0	0	167,409	234,692	0.71
3.400	97.07	947	2,197	0.00	147,662	228.6	0	181,511	234,756	0.77
3.500	99.93	959	2,292	0.00	161,611	250.2	0	196,975	234,821	0.84

BEST AVAILABLE COPY

Table B7.6.1.4-2. CASKDROP Output, End Drop. (Sheet 1 of 2)

N-55 Type B Overpack with Sample Pig			
Impact Limiter Weight (each) -	123 lbs	Cask and Payload Weight -	400 lbs
Impact Limiter Outside Diameter -	32.0000 in	Cask Outside Diameter -	25.0000 in
Impact Limiter Overall Length -	24.0000 in	Cask Overall Length -	35.1000 in
Impact Limiter Conical Diameter -	0.0000 in	Dynamic Unloading Modulus -	1.000E+07 lbs/in
Impact Limiter Conical Length -	0.0000 in	Rad Mass Moment of Inertia -	369 lb-in-s²
Impact Limiter End Thickness -	6.5000 in	Frictional Coefficient -	0.0000
Impact Limiter Hole Diameter -	0.0000 in	Drop Height -	30.0000 ft
Impact Limiter Hole Length -	0.0000 in	Drop Angle from Horizontal -	90.0000°
Unbacked Area Threshhold Strain -	0.1000 in/in	Crush Analysis Theory -	Global
Unbacked Area Crush Stress -	153 psi	Number of Integration Incs -	20

POLYFOAM CRUSH STRESS (Axial: "|" to rise)

Density = 3.000 pcf
Temp = 70.000 °F
σ-yield = 153.2 psi
Bias = 30.000%

ε (in/in)	σ (psi)
0.000	0.0
0.100	153.2
0.200	115.8
0.300	112.2
0.400	110.2
0.500	103.6
0.600	105.6
0.650	114.9
0.700	113.0
0.750	84.9
0.800	121.1

POLYFOAM CRUSH STRESS (Radial: "-" to rise)

Density = 3.000 pcf
Temp = 70.000 °F
σ-yield = 86.6 psi
Bias = 30.000%

ε (in/in)	σ (psi)
0.000	0.0
0.100	86.6
0.200	76.6
0.300	79.4
0.400	86.4
0.500	86.2
0.600	96.5
0.650	99.6
0.700	98.6
0.750	118.9
0.800	176.8

POLYFOAM CRUSH STRESS (Actual Data @ 90.0°)

Density = 3.000 pcf
Temp = 70.000 °F
σ-yield = 153.2 psi
Bias = 30.000%

ε (in/in)	σ (psi)
0.000	0.0
0.100	153.2
0.200	115.8
0.300	112.2
0.400	110.2
0.500	103.6
0.600	105.6
0.650	114.9
0.700	113.0
0.750	84.9
0.800	121.1

DEFL (in)	MAX σ (ksi)	AREA (in2)	VOLUME (in3)	XBAR (in)	IMPACT FORCE (lbs)	ACCEL (g's)	I/L MOMENT (in-lbs)	STRAIN ENERGY (in-lbs)	KINETIC ENERGY (in-lbs)	SE/KE RATIO
0.100	1.54	804	80	0.00	18,202	28.2	0	910	232,625	0.00
0.200	3.08	804	161	0.00	35,824	55.5	0	3,611	232,689	0.02
0.300	4.62	804	241	0.00	52,286	80.9	0	8,017	232,754	0.03
0.400	6.15	804	322	0.00	67,006	103.7	0	13,582	232,818	0.06
0.500	7.69	804	402	0.00	79,405	122.9	0	21,302	232,883	0.09
0.600	9.23	804	483	0.00	88,902	137.6	0	29,717	232,948	0.13
0.700	10.77	804	563	0.00	94,947	147.0	0	38,910	233,012	0.17
0.800	12.31	804	643	0.00	97,655	151.2	0	48,540	233,077	0.21
0.900	13.85	804	724	0.00	97,813	151.4	0	58,314	233,141	0.25
1.000	15.38	804	804	0.00	96,235	149.0	0	68,016	233,206	0.29
1.100	16.92	804	885	0.00	93,735	145.1	0	77,514	233,271	0.33
1.200	18.46	804	965	0.00	91,127	141.1	0	86,758	233,335	0.37
1.300	20.00	804	1,046	0.00	89,227	138.1	0	95,775	233,400	0.41
1.400	21.54	804	1,126	0.00	88,660	137.2	0	104,670	233,464	0.45
1.500	23.08	804	1,206	0.00	89,300	138.2	0	113,568	233,529	0.49
1.600	24.62	804	1,287	0.00	90,833	140.6	0	122,574	233,594	0.52
1.700	26.15	804	1,367	0.00	92,945	143.9	0	131,763	233,658	0.56
1.800	27.69	804	1,448	0.00	95,323	147.6	0	141,176	233,723	0.60
1.900	29.23	804	1,528	0.00	97,651	151.2	0	150,825	233,787	0.65
2.000	30.77	804	1,608	0.00	99,624	154.2	0	160,669	233,852	0.69
2.100	32.31	804	1,689	0.00	101,110	156.5	0	170,726	233,917	0.73
2.200	33.85	804	1,769	0.00	102,153	158.1	0	180,889	233,981	0.77
2.300	35.38	804	1,850	0.00	102,805	159.1	0	191,137	234,046	0.82
2.400	36.92	804	1,930	0.00	103,117	159.6	0	201,433	234,110	0.86

BEST AVAILABLE COPY

Table B7.6.1.4-2. CASKDROP Output, End Drop. (Sheet 2 of 2)

DEFL (in)	MAX e (%)	AREA (in2)	VOLUME (in3)	XBAR (in)	IMPACT FORCE (lbs)	ACCEL (g's)	I/L MOMENT (in-lbs)	STRAIN ENERGY (in-lbs)	KINETIC ENERGY (in-lbs)	SE/KE RATIO
2.500	38.46	804	2,011	0.00	102,624	158.9	0	211,720	234,175	0.90
2.600	40.00	804	2,091	0.00	102,076	158.0	0	221,955	234,240	0.95
2.700	41.54	804	2,171	0.00	101,523	157.2	0	232,135	234,304	0.99
2.722	41.87	804	2,189	0.00	101,405	157.0	0	234,318	234,318	1.00
2.800	43.08	804	2,252	0.00	100,980	156.3	0	244,438	234,369	1.04
2.900	44.62	804	2,332	0.00	100,456	155.5	0	254,510	234,433	1.09
3.000	46.15	804	2,413	0.00	99,958	154.7	0	264,530	234,498	1.13
3.100	47.69	804	2,493	0.00	99,492	154.0	0	274,503	234,563	1.17
3.200	49.23	804	2,574	0.00	99,068	153.4	0	284,431	234,627	1.21
3.300	50.77	804	2,654	0.00	98,691	152.8	0	294,319	234,692	1.25
3.400	52.31	804	2,734	0.00	98,393	152.3	0	304,173	234,756	1.30
3.500	53.85	804	2,815	0.00	98,223	152.0	0	314,004	234,821	1.34
3.600	55.38	804	2,895	0.00	98,231	152.1	0	323,826	234,886	1.38
3.700	56.92	804	2,976	0.00	98,468	152.4	0	333,661	234,950	1.42
3.800	58.46	804	3,056	0.00	98,986	153.2	0	343,534	235,015	1.46
3.900	60.00	804	3,137	0.00	99,833	154.5	0	353,475	235,079	1.50
4.000	61.54	804	3,217	0.00	101,031	156.4	0	363,518	235,144	1.55
4.100	63.08	804	3,297	0.00	102,466	158.6	0	373,693	235,209	1.59
4.200	64.62	804	3,378	0.00	103,995	161.0	0	384,016	235,273	1.63
4.300	66.15	804	3,458	0.00	105,421	163.2	0	394,487	235,338	1.68
4.400	67.69	804	3,539	0.00	106,055	164.2	0	405,061	235,402	1.72
4.500	69.23	804	3,619	0.00	104,964	162.5	0	415,612	235,467	1.77
4.600	70.77	804	3,700	0.00	101,262	156.8	0	425,924	235,532	1.81
4.700	72.31	804	3,780	0.00	95,633	148.3	0	435,780	235,596	1.85
4.800	73.85	804	3,860	0.00	91,130	141.1	0	445,128	235,661	1.89
4.900	75.38	804	3,941	0.00	89,747	138.9	0	454,172	235,725	1.93
5.000	76.92	804	4,021	0.00	92,933	143.9	0	463,306	235,790	1.96
5.100	78.46	804	4,102	0.00	99,364	153.8	0	472,921	235,855	2.01
5.200	80.00	804	4,182	0.00	107,416	166.3	0	483,260	235,919	2.05
5.300	81.54	804	4,263	0.00	115,737	179.2	0	494,417	235,984	2.10
5.400	83.08	804	4,343	0.00	124,058	192.0	0	506,407	236,048	2.15
5.500	84.62	804	4,423	0.00	132,379	204.9	0	519,229	236,113	2.20
5.600	86.15	804	4,504	0.00	140,700	217.8	0	532,883	236,178	2.26
5.700	87.69	804	4,584	0.00	149,021	230.7	0	547,369	236,242	2.32
5.800	89.23	804	4,665	0.00	157,342	243.6	0	562,687	236,307	2.38
5.900	90.77	804	4,745	0.00	165,664	256.4	0	578,837	236,371	2.45
6.000	92.31	804	4,825	0.00	173,985	269.3	0	595,820	236,436	2.52
6.100	93.85	804	4,906	0.00	182,306	282.2	0	613,634	236,501	2.59
6.200	95.38	804	4,986	0.00	190,627	295.1	0	632,281	236,565	2.67
6.300	96.92	804	5,067	0.00	198,948	308.0	0	651,760	236,630	2.75
6.400	98.46	804	5,147	0.00	207,269	320.9	0	672,071	236,694	2.84
6.500	100.00	804	5,228	0.00	215,591	333.7	0	693,214	236,759	2.93

BEST AVAILABLE COPY

Table B7.6.1.4-3. CASKDROP Output, Corner Drop. (Sheet 1 of 2)

N-55 Type B Overpack with Sample Pig			
Impact Limiter Weight (each)	123 lbs	Cask and Payload Weight	400 lbs
Impact Limiter Outside Diameter	32.0000 in	Cask Outside Diameter	25.0000 in
Impact Limiter Overall Length	24.0000 in	Cask Overall Length	35.1000 in
Impact Limiter Conical Diameter	0.0000 in	Dynamic Unloading Modulus	1.000E+07 lbs/in
Impact Limiter Conical Length	0.0000 in	Rad Mass Moment of Inertia	369 lb-in-s²
Impact Limiter End Thickness	6.5000 in	Frictional Coefficient	0.0000
Impact Limiter Hole Diameter	0.0000 in	Drop Height	30.0000 ft
Impact Limiter Hole Length	0.0000 in	Drop Angle from Horizontal	55.2000°
Unbacked Area Threshhold Strain	0.1000 in/in	Crush Analysis Theory	Global
Unbacked Area Crush Stress	118 psi	Number of Integration Incs	20

POLYFOAM CRUSH STRESS (Axial: "|" to rise)

Density = 3.000 pcf
Temp = 70.000 °F
σ-yield = 153.2 psi
Bias = 30.000%

ε (in/in)	σ (psi)
0.000	0.0
0.100	153.2
0.200	115.8
0.300	112.2
0.400	110.2
0.500	103.6
0.600	105.6
0.650	114.9
0.700	113.0
0.750	84.9
0.800	121.1

POLYFOAM CRUSH STRESS (Radial: "L" to rise)

Density = 3.000 pcf
Temp = 70.000 °F
σ-yield = 86.6 psi
Bias = 30.000%

ε (in/in)	σ (psi)
0.000	0.0
0.100	86.6
0.200	76.6
0.300	79.4
0.400	86.4
0.500	86.2
0.600	96.5
0.650	99.6
0.700	98.6
0.750	118.9
0.800	176.8

POLYFOAM CRUSH STRESS (Actual Data @ 55.2°)

Density = 3.000 pcf
Temp = 70.000 °F
σ-yield = 117.7 psi
Bias = 30.000%

ε (in/in)	σ (psi)
0.000	0.0
0.100	117.7
0.200	97.2
0.300	97.5
0.400	100.4
0.500	96.9
0.600	102.4
0.650	109.2
0.700	107.7
0.750	92.6
0.800	133.1

DEFL (in)	MAX ε (%)	AREA (in2)	VOLUME (in3)	XBAR (in)	IMPACT FORCE (lbs)	ACCEL (g's)	I/L MOMENT (in-lbs)	STRAIN ENERGY (in-lbs)	KINETIC ENERGY (in-lbs)	SE/KE RATIO
0.100	1.26	1	0	-0.63	5	0.0	0	0	232,625	0.00
0.200	2.52	2	0	-0.67	30	0.0	0	2	232,669	0.00
0.300	3.78	3	0	-0.71	82	0.1	0	8	232,754	0.00
0.400	5.04	5	1	-0.75	167	0.3	0	20	232,818	0.00
0.500	6.30	7	2	-0.80	287	0.4	0	43	232,883	0.00
0.600	7.56	10	2	-0.84	446	0.7	0	79	232,948	0.00
0.700	8.82	12	3	-0.88	642	1.0	0	134	233,012	0.00
0.800	10.08	15	5	-0.93	875	1.4	0	210	233,077	0.00
0.900	11.34	18	6	-0.97	1,141	1.8	0	310	233,141	0.00
1.000	12.60	21	8	-1.02	1,437	2.2	0	439	233,206	0.00
1.100	13.86	24	11	-1.07	1,757	2.7	0	599	233,271	0.00
1.200	15.13	27	13	-1.12	2,098	3.2	0	792	233,335	0.00
1.300	16.39	31	16	-1.17	2,454	3.8	0	1,019	233,400	0.00
1.400	17.65	35	19	-1.23	2,822	4.4	0	1,283	233,464	0.01
1.500	18.91	38	23	-1.29	3,197	4.9	0	1,584	233,529	0.01
1.600	20.17	42	27	-1.34	3,577	5.5	0	1,923	233,594	0.01
1.700	21.43	46	32	-1.40	3,961	6.1	0	2,300	233,658	0.01
1.800	22.70	50	36	-1.47	4,349	6.7	0	2,715	233,723	0.01
1.900	23.96	54	42	-1.53	4,740	7.3	0	3,170	233,787	0.01
2.000	25.22	58	47	-1.59	5,136	8.0	0	3,663	233,852	0.02
2.100	26.48	63	53	-1.65	5,538	8.6	0	4,197	233,917	0.02
2.200	27.74	67	60	-1.71	5,949	9.2	0	4,771	233,981	0.02
2.300	29.01	72	67	-1.78	6,368	9.9	0	5,387	234,046	0.02
2.400	30.27	76	74	-1.84	6,799	10.5	0	6,046	234,110	0.03

BEST AVAILABLE COPY

Table B7.6.1.4-3. CASKDROP Output, Corner Drop. (Sheet 2 of 2)

DEFL (in)	MAX e (ε)	AREA (in2)	VOLUME (in3)	XBAR (in)	IMPACT FORCE (lbs)	ACCEL (g's)	I/L MOMENT (in-lbs)	STRAIN ENERGY (in-lbs)	KINETIC ENERGY (in-lbs)	SE/KE RATIO
2.500	31.53	81	82	-1.90	7,240	11.2	0	6,748	234,175	0.03
2.600	32.80	85	90	-1.95	7,693	11.9	0	7,494	234,240	0.03
2.700	34.06	90	99	-2.01	8,156	12.6	0	8,287	234,304	0.04
2.800	35.32	95	108	-2.07	8,629	13.4	0	9,126	234,369	0.04
2.900	36.59	100	118	-2.12	9,111	14.1	0	10,013	234,433	0.04
3.000	37.85	105	128	-2.18	9,602	14.9	0	10,949	234,498	0.05
3.100	39.11	110	139	-2.23	10,099	15.6	0	11,934	234,563	0.05
3.200	40.38	115	150	-2.29	10,604	16.4	0	12,969	234,627	0.06
3.300	41.64	121	162	-2.34	11,113	17.2	0	14,055	234,692	0.06
3.400	42.90	126	175	-2.40	11,629	18.0	0	15,192	234,756	0.06
3.500	44.17	131	187	-2.46	12,148	18.8	0	16,381	234,821	0.07
3.600	45.43	137	201	-2.51	12,672	19.6	0	17,622	234,886	0.08
3.700	46.70	142	215	-2.57	13,199	20.4	0	18,915	234,950	0.08
3.800	47.96	148	229	-2.62	13,726	21.2	0	20,261	235,015	0.09
3.900	49.23	153	244	-2.68	14,260	22.1	0	21,661	235,079	0.09
4.000	50.49	159	260	-2.73	14,787	22.9	0	23,113	235,144	0.10
4.100	51.75	165	276	-2.78	15,330	23.7	0	24,619	235,209	0.10
4.200	53.02	170	293	-2.84	15,860	24.6	0	26,178	235,273	0.11
4.300	54.28	176	310	-2.89	16,411	25.4	0	27,792	235,338	0.12
4.400	55.55	182	328	-2.94	16,961	26.3	0	29,460	235,402	0.13
4.500	56.82	188	347	-2.99	17,505	27.1	0	31,184	235,467	0.13
4.600	58.08	194	366	-3.04	18,056	28.0	0	32,962	235,532	0.14
4.700	59.35	200	386	-3.09	18,632	28.8	0	34,796	235,596	0.15
4.800	60.61	206	406	-3.14	19,199	29.7	0	36,688	235,661	0.16
4.900	61.88	212	427	-3.19	19,766	30.6	0	38,636	235,725	0.16
5.000	63.14	218	448	-3.24	20,370	31.5	0	40,643	235,790	0.17
5.100	64.41	224	470	-3.29	20,964	32.5	0	42,710	235,855	0.18
5.200	65.68	230	493	-3.33	21,545	33.4	0	44,835	235,919	0.19
5.300	66.94	236	516	-3.38	22,178	34.3	0	47,021	235,984	0.20
5.400	68.35	242	540	-3.43	22,811	35.3	0	49,271	236,048	0.21
5.500	69.86	249	565	-3.47	23,568	36.2	0	51,580	236,113	0.22
5.600	71.38	255	590	-3.52	23,592	37.1	0	53,948	236,178	0.23
5.700	72.91	261	616	-3.58	24,603	38.1	0	56,377	236,242	0.24
5.800	74.45	268	642	-3.62	25,170	39.0	0	58,866	236,307	0.25
5.900	76.00	274	670	-3.68	25,776	39.9	0	61,413	236,371	0.26
6.000	77.56	280	697	-3.73	26,445	40.9	0	64,024	236,436	0.27
6.100	79.14	287	726	-3.77	27,110	42.0	0	66,702	236,501	0.28
6.200	80.72	293	755	-3.81	27,855	43.1	0	69,450	236,565	0.29
6.300	82.32	300	784	-3.85	28,635	44.3	0	72,275	236,630	0.31
6.400	83.93	306	815	-3.87	29,410	45.5	0	75,177	236,694	0.32
6.500	85.54	313	846	-3.90	30,270	46.9	0	78,161	236,759	0.33
6.600	87.17	319	877	-3.93	31,160	48.3	0	81,234	236,824	0.34
6.700	88.82	326	910	-3.94	32,061	49.6	0	84,396	236,888	0.36
6.800	90.47	333	943	-3.96	33,067	51.2	0	87,652	236,953	0.37
6.900	92.14	339	976	-3.98	34,134	52.8	0	91,012	237,017	0.38
7.000	93.82	346	1,011	-3.99	35,260	54.6	0	94,482	237,082	0.40
7.100	95.51	353	1,046	-4.00	36,389	56.3	0	98,065	237,147	0.41
7.200	97.21	359	1,081	-4.00	37,647	58.3	0	101,767	237,211	0.43
7.300	98.93	366	1,117	-4.01	38,548	60.3	0	105,597	237,276	0.45

BEST AVAILABLE COPY

7.6.1.4.4 Internal Spacer Analysis. In order to get some idea of the internal deflection necessary inside the drum to absorb the excess energy not absorbed by the overpack in a side drop, a rough scoping calculation can be made using approximate properties of the spacer materials. The expanded polystyrene used has properties similar to the foam used in the N-55 (Woolam 1968). In fact it is shown to have better impact absorption characteristics than polyurethane foam of similar density. However it is much lighter than the overpack foam (1.8 pcf vs. 3.0 pcf) and thus can be expected to deform quickly in response to the impact loading. A stiffer portion of the spacer is the wood spacer plate which is part of the central spacer assembly. This is specified to be made of 1/2 in. marine plywood. A crude force deflection relation can be developed using the ultimate strength given for Douglas Fir (7420 psi, Roark and Young 1975) and derating the effective thickness by ½ to account for the ply orientation in the plywood. (Wood is much stronger when crushed parallel to the grain than perpendicular to the grain). If we use a projected area equal to the effective thickness of the plywood times the diameter of a Doorstop container (0.25 in. * 7420 psi * 6 in.) = 11,130 in-lb/in, each container crushing approximately 1.6 in. of wood absorbs a sufficient portion of the energy. This is ignoring the contribution of the polystyrene. If all spacer material was crushed completely so that the seven Doorstop containers were allowed to move to their lowest position in the 55-gallon drum (Figure B7.6.1.4-2), their combined center of gravity shifts approximately 2.0 in. Thus, there is sufficient internal crush material to absorb the necessary energy and since it tends to be "softer" than the foam overpack, the loads experienced by the Doorstop are estimated to be less than the deceleration shown above for the entire package.

A brief examination of the impact capabilities of the Doorstop container is also in order. If we use a 200*g* impact load to conservatively bound any values calculated above, these accelerations can be applied to the Doorstop container to evaluate its ability to withstand the impact. The internal pressure analyses contained in Part B, Section B7.6.1.3 can be used to provide a basis for impact evaluation. Assume that the weight of the Doorstop is carried by either the base or the lid of the Doorstop container. Applying the impact force due to the Doorstop as a pressure against the base or lid inside surface. The pressure is

$$P = \frac{Wa}{A} = \frac{32(200)}{\pi(5.5)^2/4} = 269 psi$$

The internal pressure analysis gives a maximum bending stress in the lid of 774.4 psi due to an internal pressure of 32 psi. Scaling this stress up for a 269 psi pressure results in a stress of 6510 psi. Similarly, the stress in the weld attaching the base to the cylinder wall scales to a value of 3231 psi. The threads in the lid are shown to be able to carry an axial load of 133,980 lb. The load due to Doorstop would be 6400 lb. These values indicate the Doorstop container is capable of withstanding the loads imposed by the 30 ft drop requirement and that the containment boundary provided by the Doorstop container will remain intact.

Figure 7.6.1.4-2. Spacer Material Stress-Strain Curve.

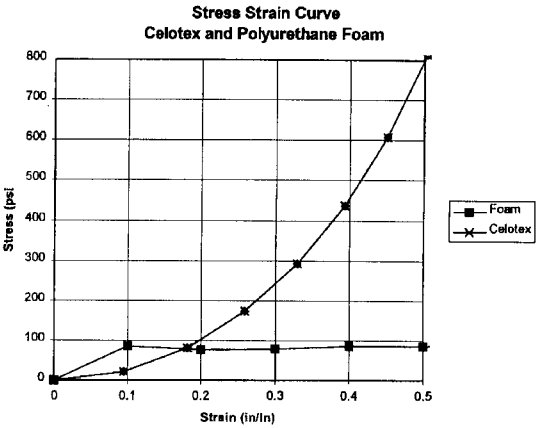

7.6.1.5 References.

NuPac, 1987, *Safety Analysis Report for the NuPac N-55 Packaging*, NRC Docket No. 71-9070, Nuclear Packaging, Inc., Federal Way, Washington.

Roark, R. J. and W. C. Young, 1975, *Formulas for Stress and Strain*, Fifth Edition, McGraw Hill Book Company, New York, New York.

Adkins, H. E., Jr., 1995, *Pig Shipping Container Test Report*, WHC-SD-TP-TR-002, Westinghouse Hanford Company, Richland, Washington.

Woolam, W. E., 1968, *A Study of the Dynamics of Low Energy Cushioning Materials Using Scale Models*, Journal of CELLULAR PLASTICS, New York, New York, February 1968.

7.6.1.6 Vibration Analysis

ENGINEERING SAFETY EVALUATION

Subject: Door top Container Vibration Evaluation Page: 1 of 5
Originator: S. S. Shiraga Date: 01/11/97
Checker: R. J. Smith Date: 01/14/97

I. Objective:

The objective of this evaluation is determine the vibrational performance of the Door Stop container.

II. References:

ANSI, N14.23, *Draft American National Standard Design Basis for Resistance to Shock and Vibration of Radioactive Material Packages Greater than One Ton in Truck Transport*, American National Standard Institute, New York, New York, 1992.

RHO, Drawing No. H-2-73008, Rev 2, *Door Stop Container*, Rockwell Hanford Operations, Richland, Washington, 1978.

Oberg, E., Jones, F. D., Holbrook, L. H., Ryffel, H. H., *Machinery's Handbook*, 24 th Edition, Industrial Press Inc., New York, New York, 1992.

Hall, A. S., Holowenko, A. R., Laughlin, H. G., *Theory and Problems of Machine Design*, Schaum's Outline Series, McGraw-Hill Book Company, New York, New York, 1961.

Shigely, J. E., Mischke, C. R., *Standard Handbook of Machine Design*, McGraw-Hill Book Company, New York, New York, 1986.

III. Results and Conclusions:

Results of this evaluation show that the Door Stop container closure will not loosen under the shock loads specified in ANSI N14.23 (ANSI 1992) nor is fatigue life a consideration. This is based on the assumption that the vector sum of the specified shock loads are applied in the worst orientation. The shock evaluation is based on conservatively idealizing the lid closure as a power screw with no preload. The positive torque value determined, indicates that overhauling will not occur and large torque is required to loosen the closure lid. Vibrational evaluation of the closure lid is conservatively based on unified thread stress theory. The evaluation shows the vibrational loads on the closure threads are negligible and are below the conservatively estimated endurance limit of the material. Consequently, fatigue life is not a concern with this container.

ENGINEERING SAFETY EVALUATION

Subject: Door top Container Vibration Evaluation
Originator: S. S. Shiraga Date: 01/11/97
Checker: R. J. Smith Date: 01/14/97

IV. Evaluation:

Door Stop Vibration Evaluation:

Since the seal is an elastomeric O-ring, assume the lid is only tightened hand tight. Determine shock loosening of the lid and fatigue load on threads. Use loading parameters from ANSI 14.23 (ANSI 1992).

Lid Weight Determination and Shock Loosening Evaluation:

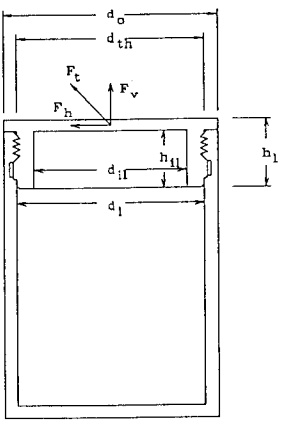

Geometric parameters (RHO 1978):

Assume generic 304L stainless steel as material.

Density of stainless steel: $\rho_{st} := 0.29 \frac{lbf}{in^3}$

Total lid height: $h_l := 1.5 \cdot in$

Height of lid inside: $h_{il} = 1.0625 in$

OD of lid: $d_o := 6.38 \cdot in$

ID of lid: $d_{il} := 5.12 \cdot in$

ID of container: $d_i := 5.50 \cdot in$

Loading shock parameters (ANSI 1992, page 10):

Vertical inertial load factor: $g_v := 2$

Longitudinal inertial load factor: $g_l := 2.3$

Lateral loading factor: $g_{la} := 1.6$

Vibration frequency: $f_{hz} := 2 \cdot Hz$

Weight of lid:

$$w_{lid} := \left[\frac{\pi \cdot d_o^2}{4} \cdot (h_l - h_{il}) + \frac{\pi}{4} \cdot \left(d_i^2 - d_{il}^2 \right) \cdot h_{il} \right] \cdot \rho_{st} \qquad w_{lid} = 5.03 \cdot lbf$$

Vector sum of horizontal forces: $F_h := \sqrt{(g_{la} \cdot w_{lid})^2 + (g_l \cdot w_{lid})^2}$ $F_h = 14.1 \cdot lbf$

Vertical force: $F_v := g_v \cdot w_{lid}$ $F_v = 10.07 \cdot lbf$

Vector sum of horizontal and vertical forces: $F_t := \sqrt{F_h^2 + F_v^2}$ $F_t = 17.32 \cdot lbf$

ENGINEERING SAFETY EVALUATION

Subject: Door top Container Vibration Evaluation — Page: 3 of 5
Originator: S. S. Shiraga — Date: 01/11/97
Checker: R. J. Smith — Date: 01/14/97

Since the lid is not preloaded to set value idealize as an evaluation of screw overhauling. Conservatively, assume that the vector sum loading forces are applied directly vertical to the lid.

Thread parameters (Oberg, et al 1992, page 1536) for 6-12UNC:

Nominal major thread external diameter: $d_{th} := 6 \cdot in$ Mean thread radius: $r_m := \frac{d_{th}}{2}$

Thread pitch: $pit := \frac{12}{in}$ Pitch length: $p := \frac{1}{pit}$ $p = 0.08 \cdot in$

Major diameter of internal thread: $D_n := 6.000 in$ Minor diameter of internal threads: $d_n := 5.9098 in$

Assumed coefficient of friction, based on metal to metal contact: $\mu := 0.1$

Thread angle for unified threads: $\theta := 30 \cdot deg$ Lead angle: $\alpha := atan\left(\frac{1}{2 \cdot \pi \cdot pit \cdot r_m}\right)$ $\alpha = 0.25 \cdot deg$

Tooth profile flank angle: $\theta_n := atan(tan(\theta) \cdot cos(\alpha))$ $\theta_n = 30 \cdot deg$

Pitch diameter: $d_p := 5.9459 in$ Minor diameter of male threads: $d_s := 5.9008 in$

Active length of male threads (RHO 1978): $L_e := (0.64 - 0.1) \cdot in$

Using floor function (Mathcad 1994), determine smallest integer of thread number:

Whole number of active threads: $N_e := floor(L_e \cdot pit)$ $N_e = 6$

Width of the external thread at root (Oberg, et al 1992, page 1520): $w_{th} := p - 0.25\,p$ $w_{th} = 0.06 \cdot in$

Assume no collar friction available and no gravity, conservatively determine turning moment (Hall, et al 1961):

$$T_{los} := F_t \cdot \left[r_m \cdot \left[\frac{\cdot \tan(\alpha) + \frac{\mu}{\cos(\theta_n)}}{1 + \frac{\mu \cdot \tan(\alpha)}{\cos(\theta_n)}} \right] \right] \qquad T_{los} = 0.48 \cdot ft \cdot lbf$$

Since T_{los} is positive, the lid will not loosen under the loading.

Determination of Thread Fatigue:

Assume gross weight of cask is: $W_{cask} := 64 \cdot lbf$

ENGINEERING SAFETY EVALUATION

Subject: Door top Container Vibration Evaluation
Originator: S. S. Shiraga
Checker: R. J. Smith

Date: 01/11/97
Date: 01/14/97

Since load is light, assume RMS force is the entire weight of cask multiplied by a factor of 2.3 (ANSI 1992).

$F_{rms} := 2.3 \cdot W_{cask}$ $F_{rms} = 147.2 \cdot lbf$

Assume no static load on the container and all loading is cyclic.

Determine thread stresses (Shigely, et al 1986, page 20.6):

Bending stress at root of threads:

$$\sigma_{bth} := \frac{3 \cdot F_{rms} \cdot (d_p - d_s)}{\pi \cdot d_p \cdot N_e \cdot w_{th}^2} \qquad \sigma_{bth} = 45 \cdot psi$$

Shear stress at root of threads:

$$\tau_{th} := \frac{4 \cdot F_{rms}}{3 \cdot \pi \cdot d_s \cdot w_{th} \cdot N_e} \qquad \tau_{th} = 28 \cdot psi$$

Bearing stress of threads:

Bearing stress geometry factor: $$\varepsilon := \frac{\cos(\theta_n)}{\left(1 + \tan(\theta_n)^2 \cdot \cos(\alpha)^2\right)^{-\frac{1}{2}} - \mu \cdot \tan(\alpha)}$$

Bearing stress: $$\sigma_{bear} := \frac{4 \cdot F_{rms} \cdot \varepsilon}{\pi \cdot N_e \cdot (d_{th}^2 - d_n^2)} \qquad \sigma_{bear} = 29 \cdot psi$$

Hoop stress on container:

Hoop coefficient: $$\beta := \frac{\tan(\theta_n)}{1 - \mu \cdot \tan(\alpha) \cdot \sqrt{1 + \tan(\theta_n)^2 \cdot \cos(\alpha)^2}} \qquad \beta = 0.58$$

Hoop stress: $$\sigma_{hc} := \frac{F_{rms} \cdot \beta}{\pi \cdot d_n \cdot P \cdot N_e} \cdot \left(\frac{d_o^2 + D_n^2}{d_o^2 - D_n^2}\right) \qquad \sigma_{hc} = 149 \cdot psi$$

Total stress on internal threads including bearing and hoop :

Total stress: $\sigma_{tot} := \sigma_{bth} + \tau_{th} + \sigma_{bear} + \sigma_{hc}$ $\sigma_{tot} = 252 \cdot psi$

ENGINEERING SAFETY EVALUATION

Subject: Door top Container Vibration Evaluation Page: 5 of 5
Originator: S. S. Shiraga Date: 01/11/97
Checker: R. J. Smith Date: 01/14/97

Determine endurance limit of assumed material (Shigely, et al 1986, page 13-11) :

Material assumed as generic stainless steel with properties of 304L stainless steel.

Assume yield strength of material: $s_y := 33 \cdot ksi$ $s_u := 60 \cdot ksi$

Surface condition factor (assume machined): $k_s := 0.85$

Size modification factor: $k_b := 0.79$

Reliabiltiy factor: $k_c := 0.5$ Temperature factor at room temperature: $k_t := 1$

Stress modification factor (based on thread concentration): $k_e := \frac{1}{3}$

Endurance stress: $s_e := k_s \cdot k_b \cdot k_c \cdot k_t \cdot k_e \cdot s_y$ $s_e = 3.69 \cdot ksi$

Since the cyclic loading stresses on the threads are very low relative to the endurance limit of common generic 304L stainless steel, vibrational fatigue loads on the container are negligible. Consequently, vibration loading is not an issue.

7.6.2 Operating Instructions Change for N-55 Overpack Evaluation

7.6.2.1 Introduction. The loading instructions for the N-55 overpack as outlined in Certificate of Compliance (CoC) (9070) specifies securing the top half of the overpack to the bottom half by fastening the four toggle clamps (barrel pins). This is accomplished by adjusting the "T" bar on the clamps such that the clamps may be closed with minimum force. Reopen the clamps, and rotate the "T" bar on all four clamps four full 360° turns clockwise. Then close the clamps. Following these instructions has resulted in damage to the molded fiberglass inner shell. To avoid destroying the N-55 overpacks, an evaluation was made of the overpack closure and instructions.

7.6.2.2 Evaluation. The amount of gasket material available for compression before the liner material in the top and bottom half of the overpack makes contact was identified. Also identified was the distance the clamp moves when rotated four full 360° turns clockwise. By comparing the two distances, it was identified that the gasket material was being over compressed and that the inner liner was forced to flex. The force on the inner liner over time resulted in cracking of the fiberglass material.

To avoid damaging the liners, a decision was made to reduce the number of turns to the point where the gasket material was properly compressed, but the liner was not forces to flex. To arrive at the proper number of turns, the distance between the top and bottom liner when closed with a new gasket and only the weight of the top of the overpack providing compression was identified. This is the position the lid is to be in when the clamps are closed with minimum force. From this position, it was identified that two full 360° turns clockwise would result in the proper amount of gasket compression without causing the inner liner to flex.

7.6.2.3 Conclusion. A discussion of the above findings was held with personnel of the overpack manufacturer. As a results of the discussions and the evaluation, a decision was made to change the overpack closure instruction for onsite use. The closure instruction for onsite use now states the following:

> Secure the top half of the N-55 overpack to the bottom half by fastening the four toggle clamps (barrel pins). This shall be done by adjusting the "T" bar on the clamps such that the clamps may be closed with minimum force. Reopen the clamps and rotate the "T" bar on all four clamps two full 360° turns clockwise. Then close the clamps.

7.6.2.4 Reference.

NRC, 1987, *Certificate of Compliance for the NuPac Model N-55 Overpack*, CoC number 9070, Docket Number 71-9070, U.S. Nuclear Regulatory Commission, Washington, D.C.

This page intentionally left blank.

8.0 THERMAL EVALUATION

The purpose of this thermal evaluation is to determine the performance of the Doorstop containers under the normal and accident conditions with the 3 W heat load per container in the normal transport configuration. In accordance with Hanford Drawings H-2-73008, H-2-73010, and H-2-73033, the normal transport configuration consists of seven Doorstop containers packed inside a DOT 208-L drum with polystyrene spacers. The DOT 208-L drum is shielded within a NuPac Type 3 Overpack, Model N-55, Drawing (NuPac 1987). Two of these overpacks are shipped together at the same time on the transport.

8.1 THERMAL SOURCE SPECIFICATION

The assumed decay heat of each Doorstop container is 3 W from the liquid waste which has a specific gravity of 1.2. The liquid volume is conservatively calculated based on the general dimension of the Doorstop container. It is also assumed that the liquid waste is filled up to a level of 3.18 cm (1.25 in.) below the bottom of the lid (H-2-73008). Based on the calculated liquid volume of 2989.98 cm^3 (182.46 in^3), the volumetric heat deposition density is 0.001 W/cm^3 (0.0562 $Btu/h\text{-}in^3$).

The worst Hanford solar insolation is taken from Table 1 (Irwin 1996), which assumes the solar insolation for an average July day at the Hanford Site. Summing up the recommended 24 hour solar insolation and averaging over 12-hour period in accordance with the 10 CFR 71 guideline, the resulting solar insolation is 0.063 W/cm^2 (1.3808 $Btu/h\text{-}in^2$). The above value is for a flat surface transported horizontally. For a curved vertical surface, the solar insolation is half of the above value; i.e., 0.0315 W/cm^2 (0.6904 $Btu/h\text{-}in^2$). An additional reduction due to an absorptivity of 0.8 for the external surface of the overpack yields the solar insolation of 0.025 W/cm^2 (0.5523 $Btu/h\text{-}in^2$).

8.2 SUMMARY OF THERMAL PROPERTIES

8.2.1 Doorstop Container

The Doorstop container is constructed of primarily 304 stainless steel, its thermo-physical properties are obtained from Table A-12a of the *Thermal Analysis Methods for Safety Analysis Reports for Packaging* (Irwin 1996) and summarized in Table B8-1.

Table B8-1. Material Properties of 304 Stainless Steel.

Temperature °C (°F)	Thermal conductivity W/m-°K (Btu/h-in-°F)	Specific heat J/kg-°K (Btu/lbm-°F)	Density kg/cm^3 (lbm/in^3)
0 (32)	13.4 (0.644)	502 (0.120)	0.008 (0.286)
20 (70)	14.8 (0.713)	456 (0.109)	0.008 (0.286)
38 (100)	15.1 (0.727)	464 (0.111)	0.008(0.286)
93 (200)	16.1 (0.774)	485 (0.116)	0.008 (0.286)
204 (400)	17.8 (0.860)	523 (0.125)	0.008 (0.286)
316 (600)	19.6 (0.943)	544 (0.130)	0.008 (0.286)
427 (800)	21.2 (1.022)	565 (0.135)	0.008 (0.286)
649 (1200)	24.3 (1.170)	586 (0.140)	0.008 (0.286)
760 (1400)	25.7 (1.238)	607 (0.145)	0.008 (0.286)
816 (1500)	26.4 (1.274)	623 (0.149)	0.008 (0.286)

8.2.2 DOT 208-L Drum and Galvanized Steel Liner of Overpack

The DOT 208-L drum and the galvanized steel liner of the N-55 overpack are assumed to be constructed of mild carbon steel. The thermal and physical properties are obtained from Table A-18 of the *Thermal Analysis Methods for Safety Analysis Reports for Packaging* (Irwin 1996) and summarized in Table B8-2.

Table B8-2. Material Properties of Mild Carbon Steel.

Temperature °C (°F)	Thermal Conductivity W/m-°K (Btu/h-in-°F)	Specific heat J/kg-°K (Btu/lbm-°F)	Density kg/cm^3 (lbm/in^3)
-73 (-100)	43.1 (2.076)	502 (0.120)	0.008 (0.280)
-17.8 (0)	43.1 (2.076)	502 (0.120)	0.008 (0.280)
204 (399)	42.2 (2.036)	519 (0.124)	0.008 (0.280)
423 (800)	38.6 (1.860)	619 (0.148)	0.008 (0.280)
648 (1198)	32.2 (1.552)	753 (0.180)	0.008 (0.280)
788 (1450)	25.9 (1.250)	837 (0.200)	0.008 (0.280)

8.2.3 Polystyrene

The seven Doorstop containers inside the DOT 208-L drum are separated with expanded polystyrene bead boards. The thermal conductivity of polystyrene is obtained from *Machine Design* (Penton Publishing Inc. 1988),

Thermal conductivity = 0.48 W/m-°K (3.3 Btu-in/h-ft^2-°F)

The specific heat of the polystyrene is assumed the same as the processed polyurethane whose specific heat is presented in Table A-31 for polyurethane

foam (Irwin 1996),

Specific heat = 1677 J/kg-°K (0.4 Btu/lbm-°F).

The density of the polystyrene used in the thermal evaluation is assumed to be 128 kg/m^3 [8 lbm/ft^3 (0.00463 lbm/in^3)].

8.2.4 Polyurethane

The N-55 overpack is made of foamed honeycomb polyurethane. The thermal conductivity of processed polyurethane is obtained from *Machine Design* (Penton Publishing Inc. 1988),

Thermal conductivity = 0.12 W/m-°K (0.8 Btu-in/h-ft^2-°F)

The specific heat of polyurethane is obtained from Table A-31 for the polyurethane foam (Irwin 1996),

Specific heat = 1677 J/kg-°K (0.4 Btu/lbm-°F).

The density of the polyurethane used in the thermal evaluation is assumed to be 128 kg/m^3 [8 lbm/ft^3 (0.00463 lbm/in^3)].

8.2.5 Fiberglass

There is a layer of fiberglass on the inner surface of the N-55 overpack. The fiberglass thermo-physical properties are adopted from Table A-35 of the low density fiberglass for the Pig Spacer at the highest given temperature (Irwin 1996),

Thermal conductivity = 0.04 W/m-°K (1.944 x 10^{-3} Btu/h-in-°F)

Specific heat = 795 J/kg-°K (0.19 Btu/lbm-°F)

Density = 69.2 kg/m^3 (0.0025 lbm/in^3).

8.2.6 Air

Air exists between the DOT 208-L drum and the overpack and at the external surface of overpack. The thermo-physical properties of air are taken from Table B-5 (Irwin 1996). They are summarized below.

Table B8-3. Material Properties of Air.

Temperature °C (°F)	Thermal conductivity W/m-°K (Btu/hr-in-°F)	Specific heat J/kg-°K (btu/lbm-°F)	Density kg/m^3 (lbm/in^3)
-17.8 (0)	0.023 (1.11 E-03)	1000 (0.239)	1.38 (4.98 E-05)
0 (32)	0.024 (1.17 E-03)	1004 (0.240)	1.30 (4.69E-05)
38 (100)	0.027 (1.28 E-03)	1004 (0.240)	1.14 (4.11 E-05)
93 (200)	0.030 (1.45 E-03)	1008 (0.241)	0.96 (3.47 E-05)
149 (300)	0.033 (1.61 E-03)	1017 (0.243)	0.83 (3.01 E-05)
204 (400)	0.037 (1.77 E-03)	1025 (0.245)	0.74 (2.66 E-05)
260 (500)	0.040 (1.93 E-03)	1033 (0.247)	0.66 (2.38 E-05)
316 (600)	0.043 (2.08 E-03)	1046 (0.250)	0.60 (2.16 E-05)
371 (700)	0.046 (2.23 E-03)	1059 (0.253)	0.55 (1.97 E-05)
427 (800)	0.049 (2.38 E-03)	1071 (0.256)	0.50 (1.82 E-05)
482 (900)	0.052 (2.53 E-03)	1084 (0.259)	0.47 (1.68 E-05)
538 (1000)	0.055 (2.66 E-03)	1096 (0.262)	0.44 (1.57 E-05)
816 (1500)	0.069 (3.33 E-03)	1155 (0.276)	0.32 (1.17 E-05)

8.2.7 Waste Contents

The waste contents is assumed to have a specific density of 1.2; i.e., a density of 1190 kg/cm^3 (0.043 lbm/in^3). Other thermo-physical properties are adopted from Table A-46 for Hanford Tank C-106 waste at the temperature of 104 °C (220 °F) (Irwin 1996).

Thermal conductivity = 0.674 W/m-°K (0.0325 Btu/h-in-°F)

Specific heat = 1255 J/kg-°K (0.30 Btu/lbm-°F)

8.3 THERMAL EVALUATION FOR NORMAL CONDITIONS

The normal conditions that were evaluated were designed to measure the thermal performance of the containers under the high extreme of the Hanford climate and the low extreme of temperature specified in 10 CFR 71. Specifically these are:

- Ambient temperature of 46 °C (115 °F), no solar insolation.
- Ambient temperature of 46 °C (115 °F), worst-case Hanford Site solar insolation.
- Ambient temperature of -40 °C (-40 °F), no solar insolation.

8.3.1 Acceptance Criteria

The Doorstop Sample Carrier System must, under normal conditions, show no appreciable degradation of shielding, containment, or structural properties. Additionally, under maximum ambient temperature of 46 °C (115 °F) without solar insolation, the maximum accessible surface temperature of the cask with overpack must be less than 82 °C (180 °F).

8.3.2 Thermal Model for Normal Conditions

ANSYS general finite element computer program (SAS 1995) is used to develop the thermal model for both normal and accident conditions. A two-dimensional model with a quarter section of the double-overpack configuration is used here. The general picture is shown in Figure B8-1 and the zoom-in views of right-hand side and left hand-side with node numbers are shown in Figure B8-2 and B8-3.

Figure B8-1. General View of Thermal Evaluation Finite Element Model.

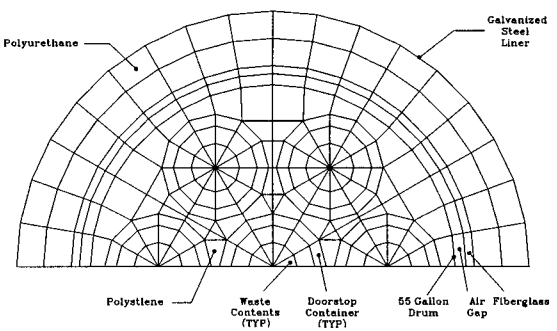

Figure B8-2. Finite Element Model with Node Numbers (Right Side).

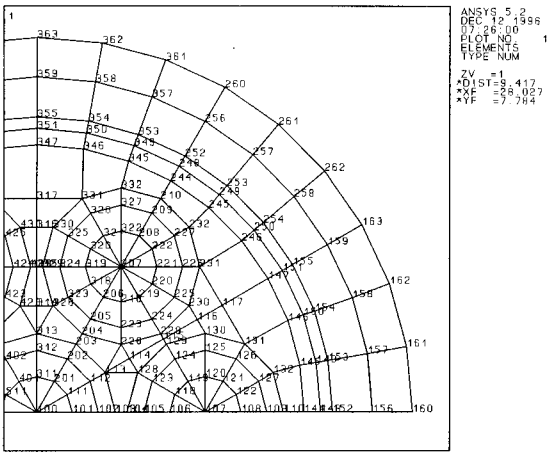

Figure B8-3. Right Side Zoom of Nodes.

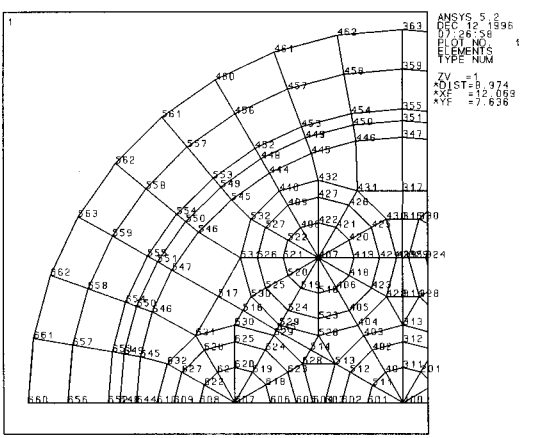

ANSYS element PLANE55, two-dimensional heat conduction solid element, is used for the Doorstop container, waste contents, and insulations (polystyrene, polyurethane, and fiberglass). The 55-gallon drum is modeled with surface element SURF19. The SURF19 element in two-dimensions is a line element connecting two nodes. A third node is identified where heat transfer occurs. This surface element can be used to account for heat transfer through thermal convection and thermal radiation. In this case, however, heat is only transferred via thermal radiation in the air gap between the DOT 208-L drum and the overpack's fiberglass layer. In addition, heat conduction links (LINK32) are used at the air gap for thermal conduction heat transfer.

The galvanized steel liner, also modelled as surface elements (SURF19), has both convection and radiation options activated. The galvanized steel liner is influenced by two objects. One object is the environment which provides natural thermal convection and thermal radiation. The second object is the adjacent overpack which also provides the thermal convection and thermal radiation. Consequently, the galvanized steel surface that faces the second overpack has two surface elements. One surface has heat transfers between the overpack and the environment, and the other surface has heat transfers between the two overpacks.

The emissivity factor of both carbon steel and fiberglass is 0.9. The material form factor of carbon to fiberglass is 0.92, refer to Table 4 (Irwin 1996). The emissivity of the galvanized steel liner is also assumed to be 0.9. The form factors between the overpack and the environment is also 0.82. For the surface that faces the second overpack the form factors varies from 0 to 0.82 depending on the angles of two overpack surfaces. However, the total sum of form factors of both surface elements (to environment and the second overpack) is still 0.82.

The natural convection heat transfer coefficient equation of the external surface of overpack to the environment is taken from Appendix B of the *Thermal Analysis Methods for Safety Analysis Reports for Packaging* (Irwin 1996).

$$h = \left(\frac{k}{L}\right) 0.555 Ra^{0.25}$$

where: Ra = Rayleigh number
k = air thermal conductivity
L = plate length

The temperature dependent convection heat transfer coefficients are listed in tables below.

Table B8-4. Convection Heat Transfer Coefficient of Air Ambient Temperature at 46 °C (115 °F).

Temperature °C (°F)	Convection heat transfer coefficient W/m^2-°K (Btu/h-in^2-°F)	Temperature °C (°F)	Convection heat transfer coefficient W/m^2-°K (Btu/h-in^2-°F)
46 (115)	0.8 (1.00 E-03)	371 (700)	4.4 (5.33 E-03)
93 (200)	3.3 (4.03 E-03)	427 (800)	4.5 (5.44 E-03)
149 (300)	3.8 (4.60 E-03)	482 (900)	4.5 (5.52 E-03)
204 (400)	4.0 (4.87 E-03)	538 (1000)	4.6 (5.56 E-03)
260 (500)	4.1 (5.06 E-03)	816 (1500)	4.7 (5.73 E-03)
316 (600)	4.3 (5.25 E-03)		

Table B8-5. Convection Heat Transfer Coefficient of Air Ambient Temperature at -40 °C (-40 °F).

Temperature °C (°F)	Convection Heat Transfer Coefficient W/m^2-°K (Btu/h-in^2-°F)	Temperature °C (°F)	Convection Heat Transfer Coefficient W/m^2-°K (Btu/h-in^2-°F)
-17.8 (0)	3.1 (3.81 E-03)	316 (600)	4.6 (5.63 E-03)
0 (32)	3.5 (4.32 E-03)	371 (700)	4.6 (5.66 E-03)
38 (100)	4.0 (4.84 E-03)	427 (800)	4.7 (5.73 E-03)
93 (200)	4.3 (5.22 E-03)	482 (900)	4.7 (5.77 E-03)
149 (300)	4.4 (5.35 E-03)	538 (1000)	4.7 (5.79 E-03)
204 (400)	4.4 (5.43 E-03)	816 (1500)	4.8 (5.88 E-03)
260 (500)	4.5 (5.51 E-03)		

The input file of the thermal model for the first normal condition case (ambient temperature of 46 °C [115 °F], no solar insolation) is shown in Appendix A. The Case 3 (ambient temperature of -40 °C [-40 °F], no solar insolation) replaces the ambient temperature from 46 °C (115 °F) to -40 °C (-40 °F) and changes the convection heat transfer coefficient of air from Table B8-4 to B8-5. For the Case 2 (ambient temperature of 46 °C [115 °F], worst case Hanford Site solar insolation), the input file of Case 1 replaces the heat convection input by the heat flux input in the definition of the elements and activate the Hanford solar insolation rate as described earlier. The required replacements are documented in Table B8-6.

Table B8-6. Case 2 Replacement.

Category	Case 2 Replacement
Title	/title, 2-d door stop container steady state analysis--Hanford insolation
Define solar insolation	solar = 0.5*1.3808*0.8 * abs = 0.8
Element definition	et,8, surf19 * surface element keyopt,8,1,1 * DOF is TEMP keyopt,8,3,0 * 2-d plane keyopt,8,4,1 * no midside node keyopt,8,5,1 * req'd for radiation/convection keyopt,8,8,1 * heat flux keyopt,8,9,1 * use radiation with the form factor real const. et,9, surf19 * surface element keyopt,9,1,1 * DOF is TEMP keyopt,9,3,0 * 2-d plane keyopt,9,4,1 * no midside node keyopt,9,5,1 * req'd for radiation keyopt,9,8,1 * heat flux keyopt,9,9,1 * use radiation with the form factor real const.
Heat Flux Definition	c*** solar heat flux at overpack external esel,s,mat,,8 sfe,all,1,hflux,,solar esel,all

8.3.3 Thermal Analysis Results for Normal Conditions

The results for normal conditions are summarized in Table B8-7 and shown in Figure B8-4 through Figure B8-6.

Table B8-7. Normal Condition Thermal Analysis Results
Maximum Temperature Except Indicated by Min.

Case	1 °C (°F)	2 °C (°F)	3 °C (°F)
Seal of Doorstop container	114 (237)	139 (282)	37 (98)
External surface of overpack	69 (156)	101 (213)	-33 (-28) (min)
Internal surface of overpack	107 (225)	132 (269)	2 (35) (min)
Outside surface of inner pack	111 (231)	134 (274)	26 (78) (min)

Figure B8-4. Temperature Distribution of Normal Condition Case 1.

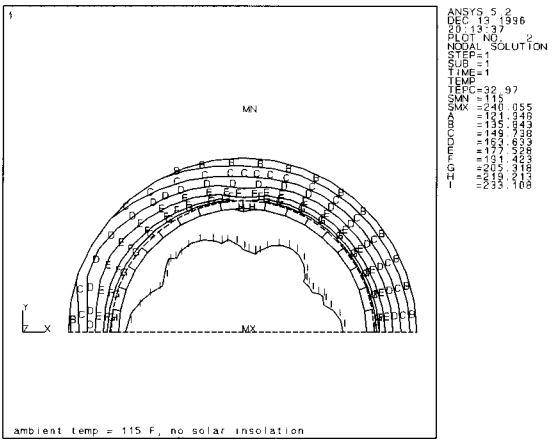

Figure B8-5. Temperature Distribution for Normal Condition Case 2.

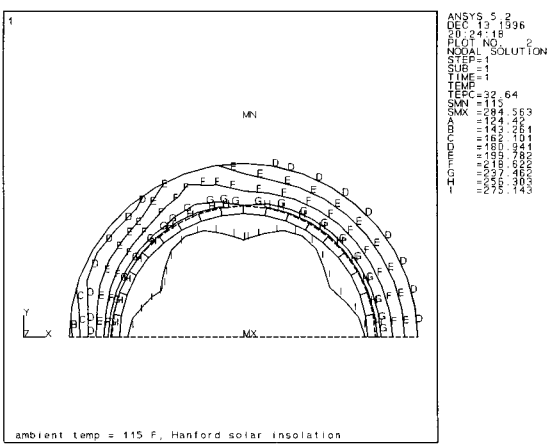

Figure B8-6. Temperature Distribution for Normal Condition Case 3.

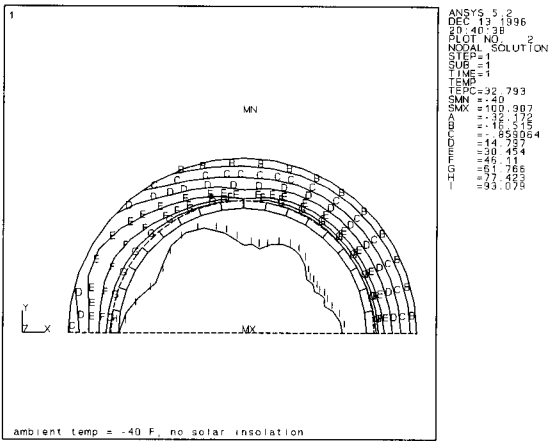

8.4 THERMAL EVALUATION FOR ACCIDENT CONDITIONS

Prior to the fire accident, the Doorstop Sample Carrier System is assumed to be at steady state in a 46 °C (115 °F) ambient temperature environment without solar insolation. These same conditions are assumed present subsequent to the fire event. The fire accident event will have a temperature of 800 °C (1475 °F) for a duration of 30 minutes. The effective emissivity of the fire for determining the heat transferred via radiation is 0.9 as specified in 10 CFR 71.73. The form factor of 0.82 is used in this analysis. This factor is based on the emissivity of 0.9 for the galvanized steel liner and the assumed totally engulfing fire.

8.4.1 Acceptance Criteria

The package shall not show any appreciable degradation of shielding, containment, or structural properties during and after a fire accident event.

8.4.2 Thermal Model for Accident Conditions

The thermal model for accident conditions is listed in Part B, Section 8.6.3. The thermal model for normal conditions is used by addition of the convection heat transfer coefficient for ambient temperature at 800 °C (1475 °F) as in Table B8-8, which is used during the 30-minute fire. Also the transient thermal load steps are added to simulate the fire event.

Table B8-8. Convection Heat Transfer Coefficient of Air Ambient Temperature at 800 °C (1475 °F).

Temperature °C (°F)	Convection Heat Transfer Coefficient W/m^2-°K (Btu/h-in^2-°F)	Temperature °C (°F)	Convection Heat Transfer Coefficient W/m^2-°K (Btu/h-in^2-°F)
38 (100)	7.0 (8.57 E-03)	371 (700)	4.7 (5.72 E-03)
93 (200)	6.5 (7.93 E-03)	427 (800)	4.4 (5.42 E-03)
149 (300)	6.0 (7.30 E-03)	482 (900)	4.2 (5.10 E-03)
204 (400)	5.6 (6.79 E-03)	538 (1000)	3.9 (4.76 E-03)
260 (500)	5.2 (6.39 E-03)	816 (1500)	1.7 (2.10 E-03)
316 (600)	5.0 (6.08 E-03)		

8.4.3 Thermal Analysis Results for Accident Condition

The temperature distributions of the fire accident are depicted in Figures B8-7 through B8-14 for at the initial steady state, heatup to 800 °C (1475 °F), 10 minutes at 800 °C (1475 °F), 20 minutes at °F, 30 minutes at 800 °C (1475 °F), cooldown to 46 °C (115 °F) after fire, 30 minutes after fire, and 200 hours after fire, respectively. These are the snap shots of temperature during the fire. The maximum temperature history at the neoprene seal of Doorstop container (Node 602) is shown in Figure B8-15. Similarly, the maximum temperature histories at the external surface of overpack (Node 160), at the internal surface of overpack (Node 351), and at the outside surface of the inner pack (Node 347) are shown in Figures B8-16, B8-17, and B8-18, respectively. The maximum temperatures during the fire accident at the critical locations are identified in Table B8-9.

Figure B8-7. Temperature Distribution for Accident Condition, Initial Steady State.

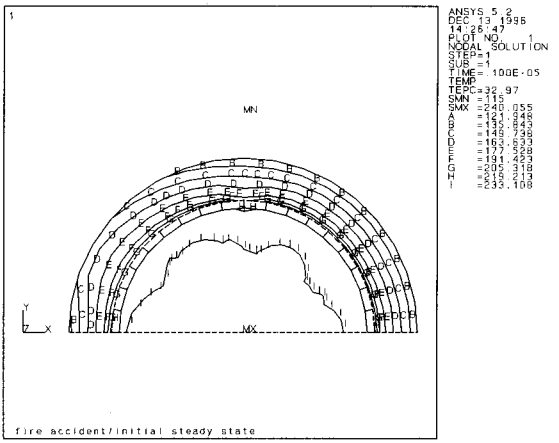

Figure B8-8. Temperature Distribution for Accident Condition, Heat up to 800 °C (1475 °F).

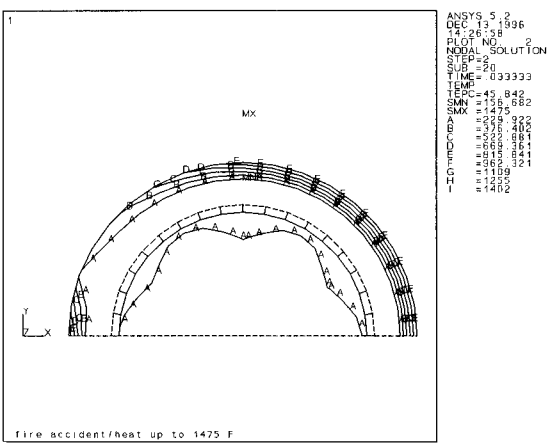

Figure B8-9. Temperature Distribution for Accident Condition, 10 minutes at 800 °C (1475 °F).

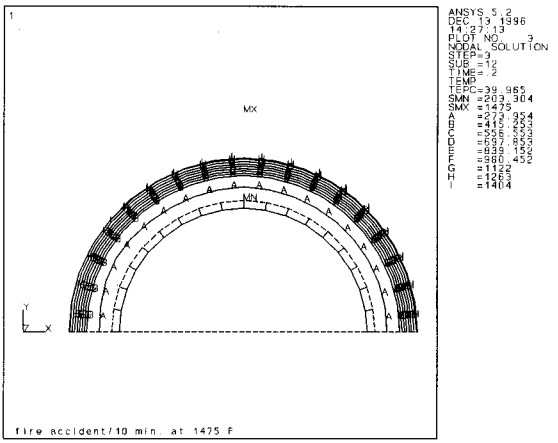

Figure B8-10. Temperature Distribution Accident Condition, 20 minutes at 800 °C (1475 °F).

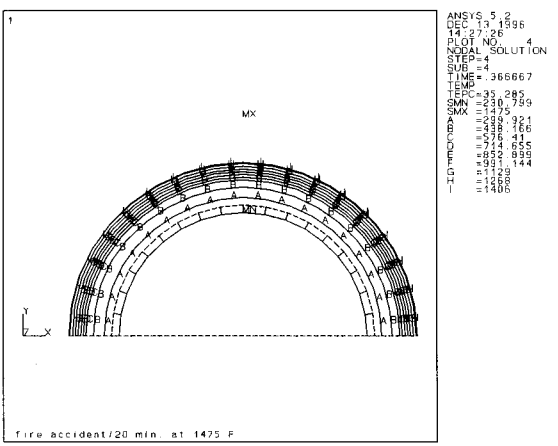

Figure B8-11. Temperature Distribution for Accident Condition, 30 minutes at 800 °C (1475 °F).

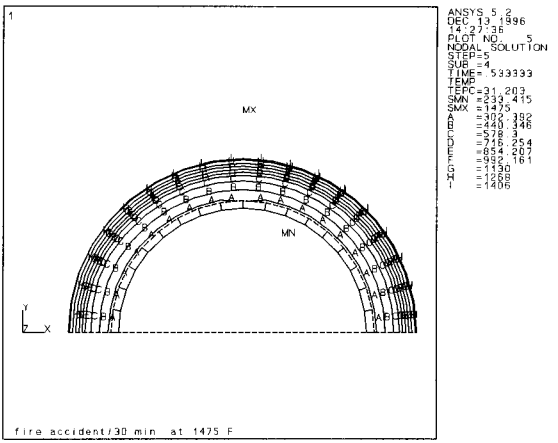

Figure B8-12. Temperature Distribution for Accident Conditions, Cool Down to 46 °C (115 °F).

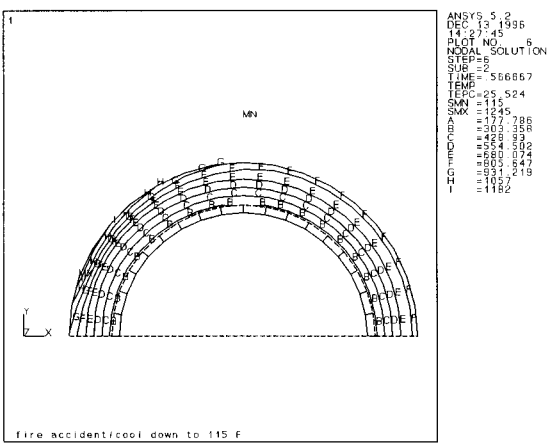

Figure B8-13. Temperature Distribution for Accident Condition, 30 minutes at 46 °C (115 °F) after Fire Event.

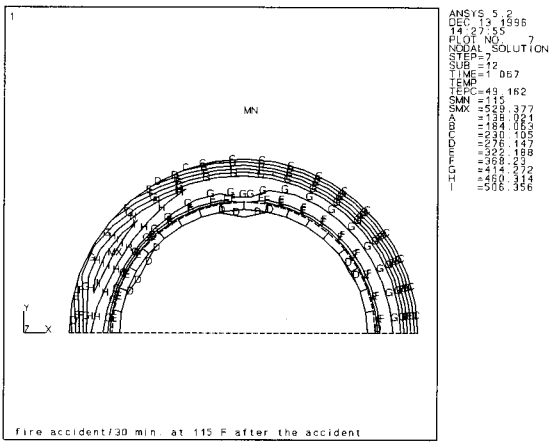

Figure B8-14. Temperature Distribution for Accident Condition, 200 h at 46 °C (115 °F) after the Fire Event.

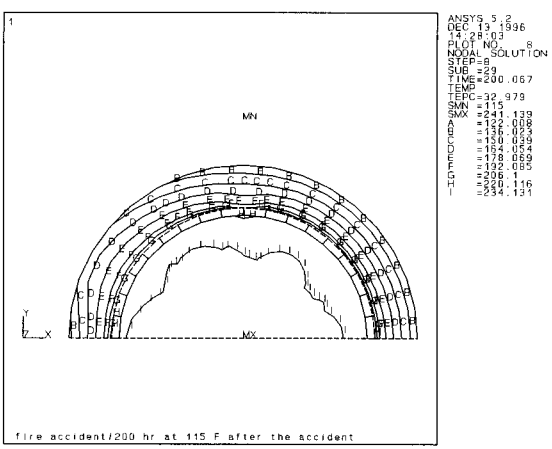

Figure B8-15. Maximum Temperature History at the Container Seal.

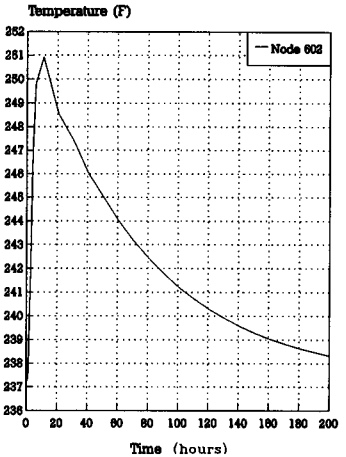

Figure B8-16. Maximum Temperature History at Exterior Wall of Overpack.

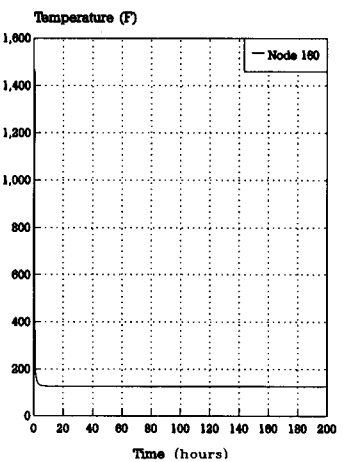

Figure B8-17. Maximum Temperature History at Interior Wall of Overpack.

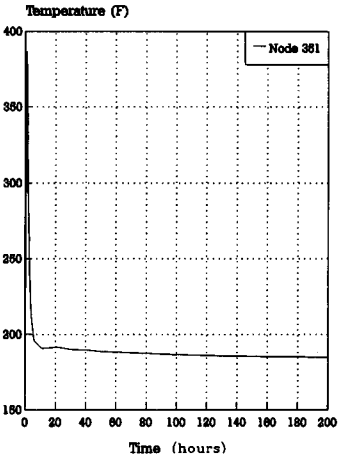

Figure B8-18. Maximum Temperature History at Exterior Wall of Inner Pack.

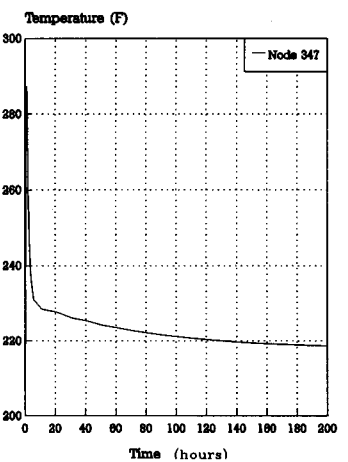

Table B8-9. Fire Accident Thermal Analysis Results.

Case	Fire Accident °C (°F)
Seal of Doorstop container	122 (251)
External surface of overpack	797 (1467)
Internal surface of overpack	197 (387)
Outside surface of inner pack	142 (287)

8.5 THERMAL EVALUATION CONCLUSION

The Neoprene service temperature ranges from -54 °C (-65 °F) to 149 °C (300 °F). The minimum temperature of the seal is 37 °C (98 °F) for the normal condition of ambient temperature of -40 °C (-40 °F). The maximum temperature at the Neoprene seal is 139 °C (282 °F) for the normal condition under the Hanford solar insolation. The maximum temperature of the seal under the fire condition is 122 °C (251 °F). The temperature of the seal for this package is higher under the normal conditions than in the fire case. The reason for this is that, under normal conditions, worst-case Hanford Site solar insolation is applied. Under onsite accident conditions, no solar insolation is applied to the package during the fire event. The basis for this is 10 CFR 71.73 which states that solar radiation may be neglected in a fire event. Consequently, the seal of the Doorstop container is adequate to sustain the specified onsite normal conditions and accident conditions. The external surface temperature is below 82 °C (180 °F) for the normal condition with ambient temperature of 46 °C (115 °F) and with no solar insolation. Consequently, package does not need to be shipped as an exclusive use shipment.

8.6 REFERENCES

10 CFR 71, 1995, "Packaging and Transportation of Radioactive Materials", *Code of Federal Regulations*, as amended.

Irwin, J. J., 1996, *Thermal Analysis Methods for Safety Analysis Reports for Packaging*, WHC-SD-TP-RPT-005, Rev. 1, Westinghouse Hanford Company, Richland, Washington.

Penton Publishing Inc., 1988, "Material Reference Issue," *Machine Design*, Penton Publishing Inc., Cleveland, Ohio.

RHO, 1984, *Doorstop Container*, drawing H-2-73008, Rev. M, Rockwell Hanford Operations, Richland, Washington.

RHO, 1983, *Transport Container Tie Down and Frame Assembly*, drawing H-2-73010, Rev. M, Rockwell Hanford Operations, Richland, Washington.

RHO, 1978, *Transport Container Sub-Assemblies*, drawing H-2-73033, Rockwell Hanford Operations, Richland, Washington.

SAS, 1995, *ANSYS User's Manual for Revision 5.2*, Swanson Analysis Systems, Inc., Houston, Pennsylvania.

NuPac, 1987, *NuPac Model N-55 Type 3 Overpack*, drawing X-60-2000-SNP, Nuclear Packaging, Inc., Seattle, Washington.

8.7 APPENDICES

8.7.1 Thermal Evaluation Model for Normal Condition

```
/filenam,ss1
qgen = (10.25/182.46)   * 3w/container
tair = 115.
/prep7
/title,  2-d  door stop container steady state analysis--no insolation
c***  btu, hr, in., F (R), lbm
c***  element definitions
et,1, plane55        * 2-d thermal sollid
et,2, link32         * 2-d conduction bar
et,5, surf19         * surface element
keyopt,5,1,1         * DOF is TEMP
keyopt,5,3,0         * 2-d plane
keyopt,5,4,1         * no midside node
keyopt,5,5,1         * req'd for radiation
keyopt,5,9,1         * use radiation with the form factor real const.
et,8, surf19         * surface element
keyopt,8,1,1         * DOF is TEMP
keyopt,8,3,0         * 2-d plane
keyopt,8,4,1         * no midside node
keyopt,8,5,1         * req'd for radiation/convection
keyopt,8,8,2         * hf is evaluated at (TS+TB)/2 for convection
keyopt,8,9,1         * use radiation with the form factor real const.
et,9, surf19         * surface element
keyopt,9,1,1         * DOF is TEMP
keyopt,9,3,0         * 2-d plane
keyopt,9,4,1         * no midside node
keyopt,9,5,1         * req'd for radiation
keyopt,9,8,2         * hf is evaluated at (TS+TB)/2 for convection
keyopt,9,9,1         * use radiation with the form factor real const.
c***  real constants
r,5,0.82,0.119e-10  * air gap between 55-gal drum and overpack
c***  conduction link/air gap
r,11,1.0167          * area (half)
r,12,2.0333          * area
c***
r,15,1.0,0.119e-10  * form factor of black body
c***
r,20,0.82,0.119e-10 * form factor at 5 deg to second overpack
r,21,0.79,0.119e-10 * form factor at 15 deg to second overpack
r,22,0.74,0.119e-10 * form factor at 25 deg to second overpack
r,23,0.67,0.119e-10 * form factor at 35 deg to second overpack
r,24,0.58,0.119e-10 * form factor at 45 deg to second overpack
r,25,0.47,0.119e-10 * form factor at 55 deg to second overpack
r,26,0.35,0.119e-10 * form factor at 65 deg to second overpack
r,27,0.21,0.119e-10 * form factor at 75 deg to second overpack
r,28,0.07,0.119e-10 * form factor at 85 deg to second overpack
c***
r,30,0.00,0.119e-10 * form factor at 5 deg to black body
r,31,0.03,0.119e-10 * form factor at 15 deg to black body
r,32,0.08,0.119e-10 * form factor at 25 deg to black body
r,33,0.15,0.119e-10 * form factor at 35 deg to black body
r,34,0.24,0.119e-10 * form factor at 45 deg to black body
r,35,0.35,0.119e-10 * form factor at 55 deg to black body
r,36,0.47,0.119e-10 * form factor at 65 deg to black body
r,37,0.61,0.119e-10 * form factor at 75 deg to black body
r,38,0.75,0.119e-10 * form factor at 85 deg to black body
c***  material definitions
c***
c***  type 304 stainless steel
mptemp
mptemp, 1, 32., 70., 100., 200., 400., 600.
mptemp, 7, 800., 1200., 1400., 1500.
c***  heat conductivity (btu/hr-in.-F)
mpdata, kxx, 1, 1, 0.644, 0.713, 0.727, 0.774, 0.860, 0.943
mpdata, kxx, 1, 7, 1.022, 1.170, 1.238, 1.274
c***  specific heat (btu/lbm-F)
mpdata, c, 1, 1, 0.120, 0.109, 0.111, 0.116, 0.125, 0.130
```

```
mpdata, c, 1, 7, 0.135, 0.140, 0.145, 0.149
c***  density (lbm/in.^3)
mp,dens,1,0.286
c***
c***  mild carbon steel/55 gal drum
mptemp
mptemp, 1, -100., 0., 399., 800., 1198., 1450.
c***  heat conductivity (btu/hr-in.-F)
mpdata, kxx, 2, 1, 2.076, 2.076, 2.036, 1.860, 1.552, 1.250
c***  specific heat (btu/lbm-F)
mpdata, c, 2, 1, 0.120, 0.120, 0.124, 0.148, 0.180, 0.200
c***  density (lbm/in.^3)
mp,dens,2,0.280
c***  air gap
mp,emis,2,0.9
c***
c***  polystyrene (inner spacer)
mp,kxx,3,0.02292     * btu/hr-in.-F
mp,c,3,0.4           * btu/lbm-F
mp,dens,3,0.00463    * lbm/in.^3 (8 lbm/ft^3)
c***
c***  polyurethane (overpack)
mp,kxx,4,0.00556     * btu/hr-in.-F
mp,c,4,0.4           * btu/lbm-F
mp,dens,4,0.00463    * lbm/in.^3 (8 lbm/ft^3)
c***
c*** fiberglass--asssume low density
mp,kxx,5,1.944e-3    * btu/hr-in.-F
mp,c,5,0.19          * btu/lbm-F
mp,dens,5,0.0025     * lbm/in.^3
c***
c***  air
mptemp
mptemp, 1,  0.,   32.,  100., 200., 300., 400.
mptemp, 7,  500., 600., 700., 800., 900., 1000.
mptemp, 13, 1500.
c***  heat conductivity (btu/hr-in.-F)
mpdata, kxx, 6, 1, 1.11e-3, 1.17e-3, 1.28e-3, 1.45e-3, 1.61e-3, 1.77e-3
mpdata, kxx, 6, 7, 1.93e-3, 2.08e-3, 2.23e-3, 2.38e-3, 2.53e-3, 2.66e-3
mpdata, kxx, 6,13, 3.33e-3
c***  heat capacity (btu/lbm-F)
mpdata, c, 6, 1, 0.239, 0.240, 0.240, 0.241, 0.243, 0.245
mpdata, c, 6, 7, 0.247, 0.250, 0.253, 0.256, 0.259, 0.262
mpdata, c, 6,13, 0.276
c***  density (lbm/in.^3)
mpdata, dens, 6, 1, 4.98e-5, 4.69e-5, 4.11e-5, 3.47e-5, 3.01e-5, 2.66e-5
mpdata, dens, 6, 7, 2.38e-5, 2.16e-5, 1.97e-5, 1.82e-5, 1.68e-5, 1.57e-5
mpdata, dens, 6,13, 1.17e-5
c***
c***  waste contents
mp,kxx,7,0.0325      * btu/hr-in.-F
mp,c,7,0.30          * btu/lbm-F
mp,dens,7,0.043      * lbm/in.^3 (assume spec. gravity = 1.2)
c***
c***  mild carbon steel/galvanized liner/to black body
mptemp
mptemp, 1,  -100.,  0.,   399., 800., 1198.,  1450.
c***  heat conductivity (btu/hr-in.-F)
mpdata, kxx, 8, 1, 2.076, 2.076, 2.036, 1.860, 1.552, 1.250
c***  specific heat (btu/lbm-F)
mpdata, c, 8, 1, 0.120, 0.120, 0.124, 0.148, 0.180, 0.200
c***  density (lbm/in.^3)
mp,dens,8,0.280      * lbm/in.^3
c***  emissivity
mp,emis,8,0.9        * external overpack to black body
c***
c***  mild carbon steel/galvanized liner/to second overpack
mptemp
mptemp, 1,  -100.,  0.,   399., 800., 1198.,  1450.
c***  heat conductivity (btu/hr-in.-F)
mpdata, kxx, 9, 1, 2.076, 2.076, 2.036, 1.860, 1.552, 1.250
c***  specific heat (btu/lbm-F)
mpdata, c, 9, 1, 0.120, 0.120, 0.124, 0.148, 0.180, 0.200
c***  density (lbm/in.^3)
mp,dens,9,0.280      * lbm/in.^3
c***  emissivity
```

```
mp,emis,9,0.9       * external overpack to second overpack
c***  vertical cylinder surface/natural convection film coefficient
c***  ambient temperature at 115 F
mptemp
mptemp, 1, 115., 200., 300., 400., 500., 600.
mptemp, 7, 700., 800., 900., 1000., 1500.
c***
mpdata, hf, 8, 1, 1.00e-8, 4.03e-3, 4.60e-3, 4.87e-3, 5.06e-3, 5.25e-3
mpdata, hf, 8, 7, 5.33e-3, 5.44e-3, 5.52e-3, 5.56e-3, 5.73e-3
c***  vertical cylinder surface/natural convection film coefficient
c***  ambient temperature at 115 F
mptemp
mptemp, 1, 115., 200., 300., 400., 500., 600.
mptemp, 7, 700., 800., 900., 1000., 1500.
c***
mpdata, hf, 9, 1, 1.00e-8, 4.03e-3, 4.60e-3, 4.87e-3, 5.06e-3, 5.25e-3
mpdata, hf, 9, 7, 5.33e-3, 5.44e-3, 5.52e-3, 5.56e-3, 5.73e-3
c***
c***  nodes
c***
n, 100,  20.000,  0.0
n, 101,  21.500,  0.0
n, 102,  22.595,  0.0
n, 103,  23.313,  0.0
n, 104,  23.813,  0.0
n, 105,  24.530,  0.0
n, 106,  25.625,  0.0
n, 107,  27.125,  0.0
n, 108,  28.625,  0.0
n, 109,  29.720,  0.0
n, 110,  30.438,  0.0
n, 111,  21.290,  0.7500
n, 112,  22.247,  1.2973
n, 113,  22.869,  1.6563
n, 114,  23.909,  2.2571
n, 115,  25.344,  3.0852
n, 116,  26.778,  3.9133
n, 117,  27.828,  4.5156
n, 118,  25.826,  0.7500
n, 119,  26.375,  1.2990
n, 120,  27.125,  1.5000
n, 121,  27.875,  1.2990
n, 122,  28.424,  0.7500
n, 123,  24.878,  1.2973
n, 124,  25.828,  2.2469
n, 125,  27.125,  2.5945
n, 126,  28.422,  2.2469
n, 127,  29.372,  1.2973
n, 128,  24.256,  1.6563
n, 129,  25.469,  2.8687
n, 130,  27.125,  3.3125
n, 131,  28.781,  2.8687
n, 132,  29.994,  1.6563
n, 144,  31.300,  0.0
n, 145,  31.128,  1.9622
n, 146,  30.619,  3.8648
n, 147,  29.786,  5.6500
n, 148,  32.000,  0.0
n, 149,  31.818,  2.0838
n, 150,  31.276,  4.1042
n, 151,  30.392,  6.0000
n, 152,  32.500,  0.0
n, 153,  32.310,  2.1706
n, 154,  31.746,  4.2753
n, 155,  30.825,  6.2500
n, 156,  34.200,  0.0
n, 157,  33.984,  2.4658
n, 158,  33.344,  4.8567
n, 159,  32.298,  7.1000
n, 160,  35.875,  0.0
n, 161,  35.634,  2.7567
n, 162,  34.918,  5.4296
n, 163,  33.748,  7.9375
n, 201,  20.750,  1.2990
n, 202,  21.297,  2.2469
n, 203,  21.656,  2.8687
```

```
n, 204,  21.906,  3.3017
n, 205,  22.265,  3.9235
n, 206,  22.812,  4.8714
n, 207,  23.562,  6.1704
n, 208,  24.312,  7.4695
n, 209,  24.860,  8.4173
n, 210,  25.219,  9.0391
n, 218,  23.563,  4.6705
n, 219,  24.312,  4.8714
n, 220,  24.862,  5.4204
n, 221,  25.062,  6.1705
n, 222,  24.862,  6.9204
n, 223,  23.563,  3.5759
n, 224,  24.860,  3.9236
n, 225,  25.809,  4.8732
n, 226,  26.157,  6.1705
n, 227,  25.809,  7.4677
n, 228,  23.563,  2.8579
n, 229,  25.219,  3.3018
n, 230,  26.431,  4.5142
n, 231,  26.875,  6.1705
n, 232,  26.431,  7.8266
n, 244,  25.650,  9.7861
n, 245,  27.263,  8.6563
n, 246,  28.656,  7.2635
n, 248,  26.000,  10.392
n, 249,  27.713,  9.1925
n, 250,  29.192,  7.7135
n, 252,  26.250,  10.825
n, 253,  28.035,  9.5756
n, 254,  29.576,  8.0349
n, 255,  30.825,  6.2500
n, 256,  27.100,  12.298
n, 257,  29.128,  10.878
n, 258,  30.878,  9.1275
n, 259,  32.298,  7.1000
n, 260,  27.937,  13.748
n, 261,  30.204,  12.161
n, 262,  32.161,  10.204
n, 311,  19.995,  1.4922
n, 312,  20.000,  2.5945
n, 313,  20.000,  3.3125
n, 314,  20.000,  4.5142
n, 315,  20.000,  6.1705
n, 316,  20.000,  7.8267
n, 317,  20.003,  9.0371
n, 318,  22.263,  5.4205
n, 319,  22.063,  6.1704
n, 320,  22.263,  6.9204
n, 321,  22.813,  7.4695
n, 322,  23.562,  7.6704
n, 323,  21.316,  4.8732
n, 324,  20.968,  6.1705
n, 325,  21.316,  7.4677
n, 326,  22.265,  8.4174
n, 327,  23.562,  8.7650
n, 328,  20.694,  4.5142
n, 329,  20.250,  6.1705
n, 330,  20.694,  7.8267
n, 331,  21.906,  9.0392
n, 332,  23.562,  9.4829
n, 344,  25.650,  9.7861
n, 345,  23.865,  10.618
n, 346,  21.962,  11.128
n, 347,  20.000,  11.300
n, 348,  26.000,  10.392
n, 349,  24.104,  11.276
n, 350,  22.084,  11.818
n, 351,  20.000,  12.000
n, 353,  24.275,  11.746
n, 354,  22.171,  12.310
n, 355,  20.000,  12.500
n, 357,  24.857,  13.344
n, 358,  22.466,  13.984
n, 359,  20.000,  14.200
n, 361,  25.430,  14.918
```

```
n, 362,  22.757,  15.634
n, 363,  20.000,  15.875
n, 401,  19.250,  1.2990
n, 402,  18.703,  2.2469
n, 403,  18.344,  2.8687
n, 404,  18.094,  3.3017
n, 405,  17.735,  3.9235
n, 406,  17.187,  4.8714
n, 407,  16.437,  6.1704
n, 408,  15.687,  7.4695
n, 409,  15.140,  8.4173
n, 410,  14.781,  9.0391
n, 418,  17.737,  5.4205
n, 419,  17.937,  6.1704
n, 420,  17.737,  6.9204
n, 421,  17.187,  7.4695
n, 422,  16.438,  7.6704
n, 423,  18.684,  4.8732
n, 424,  19.032,  6.1705
n, 425,  18.684,  7.4677
n, 426,  17.735,  8.4174
n, 427,  16.438,  8.7650
n, 428,  19.306,  4.5142
n, 429,  19.750,  6.1705
n, 430,  19.306,  7.8267
n, 431,  18.094,  9.0392
n, 432,  16.438,  9.4829
n, 444,  14.350,  9.7861
n, 445,  16.135,  10.618
n, 446,  18.038,  11.128
n, 448,  14.000,  10.392
n, 449,  15.896,  11.276
n, 450,  17.916,  11.818
n, 452,  13.750,  10.825
n, 453,  15.725,  11.746
n, 454,  17.829,  12.310
n, 456,  12.900,  12.298
n, 457,  15.143,  13.344
n, 458,  17.534,  13.984
n, 460,  12.062,  13.748
n, 461,  14.570,  14.918
n, 462,  17.243,  15.634
n, 511,  18.705,  0.7423
n, 512,  17.753,  1.2972
n, 513,  17.131,  1.6562
n, 514,  16.091,  2.2571
n, 515,  14.656,  3.0853
n, 516,  13.222,  3.9134
n, 517,  12.175,  4.5215
n, 518,  16.437,  4.6705
n, 519,  15.688,  4.8714
n, 520,  15.138,  5.4204
n, 521,  14.938,  6.1705
n, 522,  15.138,  6.9204
n, 523,  16.437,  3.5759
n, 524,  15.140,  3.9236
n, 525,  14.191,  4.8732
n, 526,  13.843,  6.1705
n, 527,  14.191,  7.4677
n, 528,  16.437,  2.8579
n, 529,  14.781,  3.3018
n, 530,  13.569,  4.5142
n, 531,  13.125,  6.1705
n, 532,  13.569,  7.8266
n, 544,  14.350,  9.7861
n, 545,  12.737,  8.6563
n, 546,  11.344,  7.2635
n, 547,  10.214,  5.6500
n, 549,  12.287,  9.1925
n, 550,  10.808,  7.7135
n, 551,  9.6077,  6.0000
n, 553,  11.965,  9.5756
n, 554,  10.424,  8.0349
n, 555,  9.1747,  6.2500
n, 557,  10.872,  10.878
n, 558,  9.1222,  9.1275
```

```
n, 559,  7.7024,  7.1000
n, 561,  9.7957,  12.161
n, 562,  7.8390,  10.204
n, 563,  6.2518,  7.9375
n, 601,  18.500,  0.0
n, 602,  17.405,  0.0
n, 603,  16.688,  0.0
n, 604,  16.188,  0.0
n, 605,  15.470,  0.0
n, 606,  14.375,  0.0
n, 607,  12.875,  0.0
n, 608,  11.375,  0.0
n, 609,  10.280,  0.0
n, 610,  9.5625,  0.0
n, 618,  14.174,  0.7500
n, 619,  13.625,  1.2990
n, 620,  12.875,  1.5000
n, 621,  12.125,  1.2990
n, 622,  11.576,  0.7500
n, 623,  15.122,  1.2973
n, 624,  14.172,  2.2469
n, 625,  12.875,  2.5945
n, 626,  11.578,  2.2469
n, 627,  10.628,  1.2973
n, 628,  15.744,  1.6563
n, 629,  14.531,  2.8687
n, 630,  12.875,  3.3125
n, 631,  11.219,  2.8687
n, 632,  10.006,  1.6563
n, 644,  8.7000,  0.0
n, 645,  8.8717,  1.9622
n, 646,  9.3815,  3.8648
n, 648,  8.0000,  0.0
n, 649,  8.1823,  2.0838
n, 650,  8.7237,  4.1042
n, 652,  7.5000,  0.0
n, 653,  7.6899,  2.1706
n, 654,  8.2538,  4.2753
n, 656,  5.8000,  0.0
n, 657,  6.0157,  2.4658
n, 658,  6.6564,  4.8567
n, 660,  4.1250,  0.0
n, 661,  4.3662,  2.7567
n, 662,  5.0824,  5.4296
n, 999,  20.,     20.
n, 990,  0.0,     0.
n, 991,  0.0,     2.7567
n, 992,  0.0,     5.4290
n, 993,  0.0,     7.9375
n, 994,  0.0,     10.204
n, 995,  0.0,     12.161
n, 996,  0.0,     13.748
n, 997,  0.0,     14.918
n, 998,  0.0,     15.634
c***
c***  section 1 elements
c***
c***  waste contents
type,1   $mat,7
e, 100,  101,  111,  111
e, 101,  102,  112,  111
c***  canister
mat,1
e, 102,  103,  113,  112
c***  polystyrene inner spacer
mat,3
e, 103,  104,  128,  113
e, 113,  128,  114,  114
e, 128,  129,  115,  114
e, 129,  130,  116,  115
e, 130,  131,  117,  116
e, 131,  146,  147,  117
e, 132,  145,  146,  131
e, 110,  144,  145,  132
c***  waste contents
mat,7
```

```
e, 106,  107,  118,  118
e, 107,  119,  118,  118
e, 107,  120,  119,  119
e, 107,  121,  120,  120
e, 107,  122,  121,  121
e, 107,  108,  122,  122
e, 105,  106,  118,  123
e, 118,  119,  124,  123
e, 119,  120,  125,  124
e, 120,  121,  126,  125
e, 121,  122,  127,  126
e, 108,  109,  127,  122
c***  canister
mat,1
e, 104,  105,  123,  128
e, 123,  124,  129,  128
e, 124,  125,  130,  129
e, 125,  126,  131,  130
e, 126,  127,  132,  131
e, 109,  110,  132,  127
c***  steel drum
type,5   $mat,2   $real,5
e, 144,  145,  148
e, 145,  146,  149
e, 146,  147,  150
c***  air gap/conduction link
type,2   $mat,6  $real,11
e, 144,  148
real,12
e, 145,  149
e, 146,  150
e, 147,  151
c***  overpack
c***  fiberglass insulation
type,1   $mat,5
e, 148,  152,  153,  149
e, 149,  153,  154,  150
e, 150,  154,  155,  151
c***  polyurethane insulation
mat,4
e, 152,  156,  157,  153
e, 153,  157,  158,  154
e, 154,  158,  159,  155
e, 156,  160,  161,  157
e, 157,  161,  162,  158
e, 158,  162,  163,  159
c***  galvanized steel
type,8   $real,15   $mat,8
e, 160,  161,  999
e, 161,  162,  999
e, 162,  163,  999
c***
c***  section 2 elements
c***
c***  waste contents
type,1   $mat,7
e, 100,  111,  201,  201
e, 111,  112,  202,  201
c***  canister
mat,1
e, 112,  113,  203,  202
c***  polystyrene inner spacer
mat,3
e, 113,  228,  204,  203
e, 113,  114,  228,  228
e, 114,  115,  229,  228
e, 115,  116,  230,  229
e, 116,  117,  231,  230
e, 117,  147,  246,  231
e, 231,  246,  245,  232
e, 232,  245,  244,  210
c***  waste contents
mat,7
e, 207,  206,  218,  218
e, 207,  218,  219,  219
e, 207,  219,  220,  220
```

```
e, 207,  220,  221,  221
e, 207,  221,  222,  222
e, 207,  222,  208,  208
e, 205,  223,  218,  206
e, 223,  224,  219,  218
e, 224,  225,  220,  219
e, 225,  226,  221,  220
e, 226,  227,  222,  221
e, 227,  209,  208,  222
c***  canister
mat,1
e, 204,  228,  223,  205
e, 228,  229,  224,  223
e, 229,  230,  225,  224
e, 230,  231,  226,  225
e, 231,  232,  227,  226
e, 232,  210,  209,  227
c***  steel drum
type,5   $mat,2   $real,5
e, 147,  246,  151
e, 246,  245,  250
e, 245,  244,  249
c***  air gap/conduction link
type,2   $mat,6  $real,12
e, 246,  250
e, 245,  249
e, 244,  248
c***  fiberglass insulation
type,1   $mat,5
e, 248,  249,  253,  252
e, 249,  250,  254,  253
e, 250,  151,  155,  254
c***  polyurethane insulation
mat,4
e, 252,  253,  257,  256
e, 253,  254,  258,  257
e, 254,  155,  159,  258
e, 256,  257,  261,  260
e, 257,  258,  262,  261
e, 258,  159,  163,  262
c***  galvanized steel
type,8   $real,15   $mat,8
e, 163,  262,  999
e, 262,  261,  999
e, 261,  260,  999
c***
c***  section 3 elements
c***
c***  waste contents
type,1   $mat,7
e, 100,  201,  311,  311
e, 201,  202,  312,  311
c***  canister
mat,1
e, 202,  203,  313,  312
c***  polystyrene inner spacer
mat,3
e, 203,  204,  328,  313
e, 313,  328,  314,  314
e, 328,  329,  315,  314
e, 329,  330,  316,  315
e, 330,  331,  317,  316
e, 331,  346,  347,  317
e, 332,  345,  346,  331
e, 210,  244,  345,  332
c***  waste contents
mat,7
e, 207,  318,  206,  206
e, 207,  319,  318,  318
e, 207,  320,  319,  319
e, 207,  321,  320,  320
e, 207,  322,  321,  321
e, 207,  208,  322,  322
e, 205,  206,  318,  323
e, 318,  319,  324,  323
e, 319,  320,  325,  324
```

```
e, 320,  321,  326,  325
e, 321,  322,  327,  326
e, 322,  208,  209,  327
c***  canister
mat,1
e, 205,  323,  328,  204
e, 323,  324,  329,  328
e, 324,  325,  330,  329
e, 325,  326,  331,  330
e, 326,  327,  332,  331
e, 327,  209,  210,  332
c***  steel drum
type,5   $mat,2   $real,5
e, 244,  345,  248
e, 345,  346,  349
e, 346,  347,  350
c***  air gap/conduction link
type,2   $mat,6  $real,12
e, 345,  349
e, 346,  350
e, 347,  351
c***  fiberglass insulation
type,1   $mat,5
e, 248,  252,  353,  349
e, 349,  353,  354,  350
e, 350,  354,  355,  351
c***  polyurethane insulation
mat,4
e, 252,  256,  357,  353
e, 353,  357,  358,  354
e, 354,  358,  359,  355
e, 256,  260,  361,  357
e, 357,  361,  362,  358
e, 358,  362,  363,  359
c***  galvanized steel
type,8   $real,15   $mat,8
e, 260,  361,  999
e, 361,  362,  999
e, 362,  363,  999
c***
c***  section 4 elements
c***
c***  waste contents
type,1   $mat,7
e, 100,  311,  401,  401
e, 311,  312,  402,  401
c***  canister
mat,1
e, 312,  313,  403,  402
c***  polystyrene inner spacer
mat,3
e, 403,  313,  428,  404
e, 313,  314,  428,  428
e, 314,  315,  429,  428
e, 315,  316,  430,  429
e, 316,  317,  431,  430
e, 317,  347,  446,  431
e, 431,  446,  445,  432
e, 432,  445,  444,  410
c***  waste contents
mat,7
e, 407,  406,  418,  418
e, 407,  418,  419,  419
e, 407,  419,  420,  420
e, 407,  420,  421,  421
e, 407,  421,  422,  422
e, 407,  422,  408,  408
e, 405,  423,  418,  406
e, 423,  424,  419,  418
e, 424,  425,  420,  419
e, 425,  426,  421,  420
e, 426,  427,  422,  421
e, 427,  409,  408,  422
c***  canister
mat,1
e, 404,  428,  423,  405
```

```
e, 428,  429,  424,  423
e, 429,  430,  425,  424
e, 430,  431,  426,  425
e, 431,  432,  427,  426
e, 432,  410,  409,  427
c***  steel drum
type,5   $mat,2   $real,5
e, 347,  446,  450
e, 446,  445,  449
e, 445,  444,  448
c***  air gap/conduction link
type,2   $mat,6  $real,12
e, 446,  450
e, 445,  449
e, 444,  448
c***  fiberglass insulation
type,1   $mat,5
e, 448,  449,  453,  452
e, 449,  450,  454,  453
e, 450,  351,  355,  454
c***  polyurethane insulation
mat,4
e, 452,  453,  457,  456
e, 453,  454,  458,  457
e, 454,  355,  359,  458
e, 456,  457,  461,  460
e, 457,  458,  462,  461
e, 458,  359,  363,  462
c***  galvanized steel
type,8   $real,38   $mat,8
e, 363,  462,  999
real,37
e, 462,  461,  999
real,36
e, 461,  460,  999
type,9   $real,28  $mat,9
e, 363,  462,  998
real,27
e, 462,  461,  997
real,26
e, 461,  460,  996
c***
c***  section 5 elements
c***
c***  waste contents
type,1   $mat,7
e, 100,  401,  511,  511
e, 401,  402,  512,  511
c***  canister
mat,1
e, 402,  403,  513,  512
c***  polystyrene inner spacer
mat,3
e, 403,  404,  528,  513
e, 513,  528,  514,  514
e, 528,  529,  515,  514
e, 529,  530,  516,  515
e, 530,  531,  517,  516
e, 531,  546,  547,  517
e, 532,  545,  546,  531
e, 410,  444,  545,  532
c***  waste contents
mat,7
e, 407,  518,  406,  406
e, 407,  519,  518,  518
e, 407,  520,  519,  519
e, 407,  521,  520,  520
e, 407,  522,  521,  521
e, 407,  408,  522,  522
e, 405,  406,  518,  523
e, 518,  519,  524,  523
e, 519,  520,  525,  524
e, 520,  521,  526,  525
e, 521,  522,  527,  526
e, 522,  408,  409,  527
c***  canister
```

```
mat,1
e, 405,  523,  528,  404
e, 523,  524,  529,  528
e, 524,  525,  530,  529
e, 525,  526,  531,  530
e, 526,  527,  532,  531
e, 527,  409,  410,  532
c***  steel drum
type,5   $mat,2   $real,5
e, 444,  545,  549
e, 545,  546,  550
e, 546,  547,  551
c***  air gap/conduction link
type,2   $mat,6  $real,12
e, 545,  549
e, 546,  550
e, 547,  551
c***  fiberglass insulation
type,1   $mat,5
e, 448,  452,  553,  549
e, 549,  553,  554,  550
e, 550,  554,  555,  551
c***  polyurethane insulation
mat,4
e, 452,  456,  557,  553
e, 553,  557,  558,  554
e, 554,  558,  559,  555
e, 456,  460,  561,  557
e, 557,  561,  562,  558
e, 558,  562,  563,  559
c***  galvanized steel
type,5   $real,35   $mat,8
e, 460,  561,  999
real,34
e, 561,  562,  999
real,33
e, 562,  563,  999
type,9   $real,25  $mat,9
e, 460,  561,  995
real,24
e, 561,  562,  994
real,23
e, 562,  563,  993
c***
c***  section 6 elements
c***
c***  waste contents
type,1   $mat,7
e, 601,  100,  511,  511
e, 602,  601,  511,  512
c***  canister
mat,1
e, 603,  602,  512,  513
c***  polystyrene inner spacer
mat,3
e, 604,  603,  513,  628
e, 628,  513,  514,  514
e, 628,  514,  515,  629
e, 629,  515,  516,  630
e, 630,  516,  517,  631
e, 631,  517,  547,  646
e, 632,  631,  646,  645
e, 644,  610,  632,  645
c***  waste contents
mat,7
e, 607,  606,  618,  618
e, 607,  618,  619,  619
e, 607,  619,  620,  620
e, 607,  620,  621,  621
e, 607,  621,  622,  622
e, 608,  607,  622,  622
e, 606,  605,  623,  618
e, 618,  623,  624,  619
e, 619,  624,  625,  620
e, 621,  620,  625,  626
e, 622,  621,  626,  627
```

```
e, 609,  608,  622,  627
c***  canister
mat,1
e, 605,  604,  628,  623
e, 623,  628,  629,  624
e, 624,  629,  630,  625
e, 625,  630,  631,  626
e, 627,  626,  631,  632
e, 610,  609,  627,  632
c***  steel drum
type,5   $mat,2   $real,5
e, 547,  646,  650
e, 646,  645,  649
e, 645,  644,  648
c***  air gap/conduction link
type,2   $mat,6  $real,12
e, 646,  650
e, 645,  649
real,11
e, 644,  648
c***  fiberglass insulation
type,1   $mat,5
e, 652,  648,  649,  653
e, 653,  649,  650,  654
e, 654,  650,  551,  555
c***  polyurethane insulation
mat,4
e, 656,  652,  653,  657
e, 657,  653,  654,  658
e, 658,  654,  555,  559
e, 660,  656,  657,  661
e, 661,  657,  658,  662
e, 662,  658,  559,  563
c***  galvanized steel
type,5   $real,32   $mat,8
e, 563,  662,  999
real,31
e, 662,  661,  999
real,30
e, 661,  660,  999
type,9   $real,22  $mat,9
e, 563,  662,  992
real,21
e, 662,  661,  991
real,20
e, 661,  660,  990
c***  steady state
/solu
/title, door stop container steady-state (3 w/canister)
/title, ambient temp = 115 F, no solar insolation  ** ss case 1
outpr,,1
outres,all,1
toffst,460.
tunif,tair
kbc,1
d,999,temp,tair
f,990,heat,0.
f,991,heat,0.
f,992,heat,0.
f,993,heat,0.
f,994,heat,0.
f,995,heat,0.
f,996,heat,0.
f,997,heat,0.
f,998,heat,0.
c***  heat load
c***  internal heat generation
c***  qgen = (10.25/182.46)     * 3 w/canister
esel,s,mat,,7
bfe,all,hgen,,qgen
esel,all
c***  natural convection at overpack external surface
esel,s,mat,,8
sfe,all,1,conv,0,-8
esel,all
c***  natural convection between overpacks
```

```
esel,s,mat,,9
sfe,all,1,conv,0,-9
esel,all
solve
finish
```

8.7.2 Thermal Evaluation Model for Accident Condition

```
/filenam,tt2
qgen = (10.25/182.46)   * 3w/container
tair = 115.
/config,nres,2000
/prep7
/title,  2-d  door stop container fire accident transient analysis
c***  no insolation
c***  7 x 3w/canister internal heat generation
c***  btu, hr, in., F (R), lbm
c***  element definitions
et,1, plane55        * 2-d thermal sollid
et,2, link32         * 2-d conduction bar
et,5, surf19         * surface element
keyopt,5,1,1         * DOF is TEMP
keyopt,5,3,0         * 2-d plane
keyopt,5,4,1         * no midside node
keyopt,5,5,1         * req'd for radiation
keyopt,5,9,1         * use radiation with the form factor real const.
et,8, surf19         * surface element
keyopt,8,1,1         * DOF is TEMP
keyopt,8,3,0         * 2-d plane
keyopt,8,4,1         * no midside node
keyopt,8,5,1         * req'd for radiation/convection
keyopt,8,8,2         * hf is evaluated at (TS+TB)/2 for convection
keyopt,8,9,1         * use radiation with the form factor real const.
et,9, surf19         * surface element
keyopt,9,1,1         * DOF is TEMP
keyopt,9,3,0         * 2-d plane
keyopt,9,4,1         * no midside node
keyopt,9,5,1         * req'd for radiation
keyopt,9,8,2         * hf is evaluated at (TS+TB)/2 for convection
keyopt,9,9,1         * use radiation with the form factor real const.
c***  real constants
r,5,0.82,0.119e-10  * air gap between 55-gal drum and overpack
c***  conduction link/air gap
r,11,1.0167          * area (half)
r,12,2.0333          * area
c***
r,15,1.0,0.119e-10  * form factor of black body
c***
r,20,0.82,0.119e-10 * form factor at 5 deg to second overpack
r,21,0.79,0.119e-10 * form factor at 15 deg to second overpack
r,22,0.74,0.119e-10 * form factor at 25 deg to second overpack
r,23,0.67,0.119e-10 * form factor at 35 deg to second overpack
r,24,0.58,0.119e-10 * form factor at 45 deg to second overpack
r,25,0.47,0.119e-10 * form factor at 55 deg to second overpack
r,26,0.35,0.119e-10 * form factor at 65 deg to second overpack
r,27,0.21,0.119e-10 * form factor at 75 deg to second overpack
r,28,0.07,0.119e-10 * form factor at 85 deg to second overpack
c***
r,30,0.00,0.119e-10 * form factor at 5 deg to black body
r,31,0.03,0.119e-10 * form factor at 15 deg to black body
r,32,0.08,0.119e-10 * form factor at 25 deg to black body
r,33,0.15,0.119e-10 * form factor at 35 deg to black body
r,34,0.24,0.119e-10 * form factor at 45 deg to black body
r,35,0.35,0.119e-10 * form factor at 55 deg to black body
r,36,0.47,0.119e-10 * form factor at 65 deg to black body
r,37,0.61,0.119e-10 * form factor at 75 deg to black body
r,38,0.75,0.119e-10 * form factor at 85 deg to black body
c***  material definitions
c***
c***  type 304 stainless steel
mptemp
mptemp, 1, 32., 70., 100., 200., 400., 600.
mptemp, 7, 800., 1200., 1400., 1500.
c***  heat conductivity (btu/hr-in.-F)
mpdata, kxx, 1, 1, 0.644, 0.713, 0.727, 0.774, 0.860, 0.943
mpdata, kxx, 1, 7, 1.022, 1.170, 1.238, 1.274
c***  specific heat (btu/lbm-F)
mpdata, c, 1, 1, 0.120, 0.109, 0.111, 0.116, 0.125, 0.130
mpdata, c, 1, 7, 0.135, 0.140, 0.145, 0.149
```

```
c***  density (lbm/in.^3)
mp,dens,1,0.286
c***
c***  mild carbon steel/55 gal drum
mptemp
mptemp, 1, -100., 0., 399., 800., 1198., 1450.
c***  heat conductivity (btu/hr-in.-F)
mpdata, kxx, 2, 1, 2.076, 2.076, 2.036, 1.860, 1.552, 1.250
c***  specific heat (btu/lbm-F)
mpdata, c, 2, 1, 0.120, 0.120, 0.124, 0.148, 0.180, 0.200
c***  density (lbm/in.^3)
mp,dens,2,0.280
c***  air gap
mp,emis,2,0.9
c***
c***  polystyrene (inner spacer)
mp,kxx,3,0.02292    * btu/hr-in.-F
mp,c,3,0.4          * btu/lbm-F
mp,dens,3,0.00463   * lbm/in.^3 (8 lbm/ft^3)
c***
c***  polyurethane (overpack)
mp,kxx,4,0.00556    * btu/hr-in.-F
mp,c,4,0.4          * btu/lbm-F
mp,dens,4,0.00463   * lbm/in.^3 (8 lbm/ft^3)
c***
c*** fiberglass--asssume low density
mp,kxx,5,1.944e-3   * btu/hr-in.-F
mp,c,5,0.19         * btu/lbm-F
mp,dens,5,0.0025    * lbm/in.^3
c***
c***  air
mptemp
mptemp, 1,  0.,   32.,  100., 200., 300., 400.
mptemp, 7,  500., 600., 700., 800., 900., 1000.
mptemp, 13, 1500.
c***  heat conductivity (btu/hr-in.-F)
mpdata, kxx, 6, 1, 1.11e-3, 1.17e-3, 1.28e-3, 1.45e-3, 1.61e-3, 1.77e-3
mpdata, kxx, 6, 7, 1.93e-3, 2.08e-3, 2.23e-3, 2.38e-3, 2.53e-3, 2.66e-3
mpdata, kxx, 6,13, 3.33e-3
c***  heat capacity (btu/lbm-F)
mpdata, c, 6, 1, 0.239, 0.240, 0.240, 0.241, 0.243, 0.245
mpdata, c, 6, 7, 0.247, 0.250, 0.253, 0.256, 0.259, 0.262
mpdata, c, 6,13, 0.276
c***  density (lbm/in.^3)
mpdata, dens, 6, 1, 4.98e-5, 4.69e-5, 4.11e-5, 3.47e-5, 3.01e-5, 2.66e-5
mpdata, dens, 6, 7, 2.38e-5, 2.16e-5, 1.97e-5, 1.82e-5, 1.68e-5, 1.57e-5
mpdata, dens, 6,13, 1.17e-5
c***
c***  waste contents
mp,kxx,7,0.0325     * btu/hr-in.-F
mp,c,7,0.30         * btu/lbm-F
mp,dens,7,0.043     * lbm/in.^3 (assume spec. gravity = 1.2)
c***
c***  mild carbon steel/galvanized liner/to black body
mptemp
mptemp, 1,  -100.,  0.,   399., 800., 1198.,  1450.
c***  heat conductivity (btu/hr-in.-F)
mpdata, kxx, 8, 1, 2.076, 2.076, 2.036, 1.860, 1.552, 1.250
c***  specific heat (btu/lbm-F)
mpdata, c, 8, 1, 0.120, 0.120, 0.124, 0.148, 0.180, 0.200
c***  density (lbm/in.^3)
mp,dens,8,0.280     * lbm/in.^3
c***  emissivity
mp,emis,8,0.9       * external overpack to black body
c***
c***  mild carbon steel/galvanized liner/to second overpack
mptemp
mptemp, 1,  -100.,  0.,   399., 800., 1198.,  1450.
c***  heat conductivity (btu/hr-in.-F)
mpdata, kxx, 9, 1, 2.076, 2.076, 2.036, 1.860, 1.552, 1.250
c***  specific heat (btu/lbm-F)
mpdata, c, 9, 1, 0.120, 0.120, 0.124, 0.148, 0.180, 0.200
c***  density (lbm/in.^3)
mp,dens,9,0.280     * lbm/in.^3
c***  emissivity
mp,emis,9,0.9       * external overpack to second overpack
```

```
c***  vertical cylinder surface/natural convection film coefficient
c***  ambient temperature at 115 F
mptemp
mptemp, 1, 115., 200., 300., 400., 500., 600.
mptemp, 7, 700., 800., 900., 1000., 1500.
c***
mpdata, hf, 8, 1, 1.00e-8, 4.03e-3, 4.60e-3, 4.87e-3, 5.06e-3, 5.25e-3
mpdata, hf, 8, 7, 5.33e-3, 5.44e-3, 5.52e-3, 5.56e-3, 5.73e-3
c***  vertical cylinder surface/natural convection film coefficient
c***  ambient temperature at 115 F
mptemp
mptemp, 1, 115., 200., 300., 400., 500., 600.
mptemp, 7, 700., 800., 900., 1000., 1500.
c***
mpdata, hf, 9, 1, 1.00e-8, 4.03e-3, 4.60e-3, 4.87e-3, 5.06e-3, 5.25e-3
mpdata, hf, 9, 7, 5.33e-3, 5.44e-3, 5.52e-3, 5.56e-3, 5.73e-3
c***  vertical cylinder surface/natural convection film coefficient
c***  ambient temperature at 1475 F
mptemp
mptemp, 1, 100., 200., 300., 400., 500., 600.
mptemp, 7, 700., 800., 900., 1000., 1500.
c***
mpdata, hf, 18, 1, 8.57e-3, 7.93e-3, 7.30e-3, 6.79e-3, 6.39e-3, 6.08e-3
mpdata, hf, 18, 7, 5.72e-3, 5.42e-3, 5.10e-3, 4.76e-3, 2.10e-3
c***  vertical cylinder surface/natural convection film coefficient
c***  ambient temperature at 1475 F
mptemp
mptemp, 1, 100., 200., 300., 400., 500., 600.
mptemp, 7, 700., 800., 900., 1000., 1500.
c***
mpdata, hf, 19, 1, 8.57e-3, 7.93e-3, 7.30e-3, 6.79e-3, 6.39e-3, 6.08e-3
mpdata, hf, 19, 7, 5.72e-3, 5.42e-3, 5.10e-3, 4.76e-3, 2.10e-3
c***
c***  nodes
c***
n, 100,  20.000,  0.0
n, 101,  21.500,  0.0
n, 102,  22.595,  0.0
n, 103,  23.313,  0.0
n, 104,  23.813,  0.0
n, 105,  24.530,  0.0
n, 106,  25.625,  0.0
n, 107,  27.125,  0.0
n, 108,  28.625,  0.0
n, 109,  29.720,  0.0
n, 110,  30.438,  0.0
n, 111,  21.290,  0.7500
n, 112,  22.247,  1.2973
n, 113,  22.869,  1.6563
n, 114,  23.909,  2.2571
n, 115,  25.344,  3.0852
n, 116,  26.778,  3.9133
n, 117,  27.828,  4.5156
n, 118,  25.826,  0.7500
n, 119,  26.375,  1.2990
n, 120,  27.125,  1.5000
n, 121,  27.875,  1.2990
n, 122,  28.424,  0.7500
n, 123,  24.878,  1.2973
n, 124,  25.828,  2.2469
n, 125,  27.125,  2.5945
n, 126,  28.422,  2.2469
n, 127,  29.372,  1.2973
n, 128,  24.256,  1.6563
n, 129,  25.469,  2.8687
n, 130,  27.125,  3.3125
n, 131,  28.781,  2.8687
n, 132,  29.994,  1.6563
n, 144,  31.300,  0.0
n, 145,  31.128,  1.9622
n, 146,  30.619,  3.8648
n, 147,  29.786,  5.6500
n, 148,  32.000,  0.0
n, 149,  31.818,  2.0838
n, 150,  31.276,  4.1042
n, 151,  30.392,  6.0000
```

```
n, 152,  32.500,  0.0
n, 153,  32.310,  2.1706
n, 154,  31.746,  4.2753
n, 155,  30.825,  6.2500
n, 156,  34.200,  0.0
n, 157,  33.984,  2.4658
n, 158,  33.344,  4.8567
n, 159,  32.298,  7.1000
n, 160,  35.875,  0.0
n, 161,  35.634,  2.7567
n, 162,  34.918,  5.4296
n, 163,  33.748,  7.9375
n, 201,  20.750,  1.2990
n, 202,  21.297,  2.2469
n, 203,  21.656,  2.8687
n, 204,  21.906,  3.3017
n, 205,  22.265,  3.9235
n, 206,  22.812,  4.8714
n, 207,  23.562,  6.1704
n, 208,  24.312,  7.4695
n, 209,  24.860,  8.4173
n, 210,  25.219,  9.0391
n, 218,  23.563,  4.6705
n, 219,  24.312,  4.8714
n, 220,  24.862,  5.4204
n, 221,  25.062,  6.1705
n, 222,  24.862,  6.9204
n, 223,  23.563,  3.5759
n, 224,  24.860,  3.9236
n, 225,  25.809,  4.8732
n, 226,  26.157,  6.1705
n, 227,  25.809,  7.4677
n, 228,  23.563,  2.8579
n, 229,  25.219,  3.3018
n, 230,  26.431,  4.5142
n, 231,  26.875,  6.1705
n, 232,  26.431,  7.8266
n, 244,  25.650,  9.7861
n, 245,  27.263,  8.6563
n, 246,  28.656,  7.2635
n, 248,  26.000,  10.392
n, 249,  27.713,  9.1925
n, 250,  29.192,  7.7135
n, 252,  26.250,  10.825
n, 253,  28.035,  9.5756
n, 254,  29.576,  8.0349
n, 255,  30.825,  6.2500
n, 256,  27.100,  12.298
n, 257,  29.128,  10.878
n, 258,  30.878,  9.1275
n, 259,  32.298,  7.1000
n, 260,  27.937,  13.748
n, 261,  30.204,  12.161
n, 262,  32.161,  10.204
n, 311,  19.995,  1.4922
n, 312,  20.000,  2.5945
n, 313,  20.000,  3.3125
n, 314,  20.000,  4.5142
n, 315,  20.000,  6.1705
n, 316,  20.000,  7.8267
n, 317,  20.003,  9.0371
n, 318,  22.263,  5.4205
n, 319,  22.063,  6.1704
n, 320,  22.263,  6.9204
n, 321,  22.813,  7.4695
n, 322,  23.562,  7.6704
n, 323,  21.316,  4.8732
n, 324,  20.968,  6.1705
n, 325,  21.316,  7.4677
n, 326,  22.265,  8.4174
n, 327,  23.562,  8.7650
n, 328,  20.694,  4.5142
n, 329,  20.250,  6.1705
n, 330,  20.694,  7.8267
n, 331,  21.906,  9.0392
n, 332,  23.562,  9.4829
```

```
n, 344,  25.650,  9.7861
n, 345,  23.865,  10.618
n, 346,  21.962,  11.128
n, 347,  20.000,  11.300
n, 348,  26.000,  10.392
n, 349,  24.104,  11.276
n, 350,  22.084,  11.818
n, 351,  20.000,  12.000
n, 353,  24.275,  11.746
n, 354,  22.171,  12.310
n, 355,  20.000,  12.500
n, 357,  24.857,  13.344
n, 358,  22.466,  13.984
n, 359,  20.000,  14.200
n, 361,  25.430,  14.918
n, 362,  22.757,  15.634
n, 363,  20.000,  15.875
n, 401,  19.250,  1.2990
n, 402,  18.703,  2.2469
n, 403,  18.344,  2.8687
n, 404,  18.094,  3.3017
n, 405,  17.735,  3.9235
n, 406,  17.187,  4.8714
n, 407,  16.437,  6.1704
n, 408,  15.687,  7.4695
n, 409,  15.140,  8.4173
n, 410,  14.781,  9.0391
n, 418,  17.737,  5.4205
n, 419,  17.937,  6.1704
n, 420,  17.737,  6.9204
n, 421,  17.187,  7.4695
n, 422,  16.438,  7.6704
n, 423,  18.684,  4.8732
n, 424,  19.032,  6.1705
n, 425,  18.684,  7.4677
n, 426,  17.735,  8.4174
n, 427,  16.438,  8.7650
n, 428,  19.306,  4.5142
n, 429,  19.750,  6.1705
n, 430,  19.306,  7.8267
n, 431,  18.094,  9.0392
n, 432,  16.438,  9.4829
n, 444,  14.350,  9.7861
n, 445,  16.135,  10.618
n, 446,  18.038,  11.128
n, 448,  14.000,  10.392
n, 449,  15.896,  11.276
n, 450,  17.916,  11.818
n, 452,  13.750,  10.825
n, 453,  15.725,  11.746
n, 454,  17.829,  12.310
n, 456,  12.900,  12.298
n, 457,  15.143,  13.344
n, 458,  17.534,  13.984
n, 460,  12.062,  13.748
n, 461,  14.570,  14.918
n, 462,  17.243,  15.634
n, 511,  18.705,  0.7423
n, 512,  17.753,  1.2972
n, 513,  17.131,  1.6562
n, 514,  16.091,  2.2571
n, 515,  14.656,  3.0853
n, 516,  13.222,  3.9134
n, 517,  12.175,  4.5215
n, 518,  16.437,  4.6705
n, 519,  15.688,  4.8714
n, 520,  15.138,  5.4204
n, 521,  14.938,  6.1705
n, 522,  15.138,  6.9204
n, 523,  16.437,  3.5759
n, 524,  15.140,  3.9236
n, 525,  14.191,  4.8732
n, 526,  13.843,  6.1705
n, 527,  14.191,  7.4677
n, 528,  16.437,  2.8579
n, 529,  14.781,  3.3018
```

```
n, 530,  13.569,  4.5142
n, 531,  13.125,  6.1705
n, 532,  13.569,  7.8266
n, 544,  14.350,  9.7861
n, 545,  12.737,  8.6563
n, 546,  11.344,  7.2635
n, 547,  10.214,  5.6500
n, 549,  12.287,  9.1925
n, 550,  10.808,  7.7135
n, 551,  9.6077,  6.0000
n, 553,  11.965,  9.5756
n, 554,  10.424,  8.0349
n, 555,  9.1747,  6.2500
n, 557,  10.872,  10.878
n, 558,  9.1222,  9.1275
n, 559,  7.7024,  7.1000
n, 561,  9.7957,  12.161
n, 562,  7.8390,  10.204
n, 563,  6.2518,  7.9375
n, 601,  18.500,  0.0
n, 602,  17.405,  0.0
n, 603,  16.688,  0.0
n, 604,  16.188,  0.0
n, 605,  15.470,  0.0
n, 606,  14.375,  0.0
n, 607,  12.875,  0.0
n, 608,  11.375,  0.0
n, 609,  10.280,  0.0
n, 610,  9.5625,  0.0
n, 618,  14.174,  0.7500
n, 619,  13.625,  1.2990
n, 620,  12.875,  1.5000
n, 621,  12.125,  1.2990
n, 622,  11.576,  0.7500
n, 623,  15.122,  1.2973
n, 624,  14.172,  2.2469
n, 625,  12.875,  2.5945
n, 626,  11.578,  2.2469
n, 627,  10.628,  1.2973
n, 628,  15.744,  1.6563
n, 629,  14.531,  2.8687
n, 630,  12.875,  3.3125
n, 631,  11.219,  2.8687
n, 632,  10.006,  1.6563
n, 644,  8.7000,  0.0
n, 645,  8.8717,  1.9622
n, 646,  9.3815,  3.8648
n, 648,  8.0000,  0.0
n, 649,  8.1823,  2.0838
n, 650,  8.7237,  4.1042
n, 652,  7.5000,  0.0
n, 653,  7.6899,  2.1706
n, 654,  8.2538,  4.2753
n, 656,  5.8000,  0.0
n, 657,  6.0157,  2.4658
n, 658,  6.6564,  4.8567
n, 660,  4.1250,  0.0
n, 661,  4.3662,  2.7567
n, 662,  5.0824,  5.4296
n, 999,  20.,     20.
n, 990,  0.0,     0.
n, 991,  0.0,     2.7567
n, 992,  0.0,     5.4290
n, 993,  0.0,     7.9375
n, 994,  0.0,     10.204
n, 995,  0.0,     12.161
n, 996,  0.0,     13.748
n, 997,  0.0,     14.918
n, 998,  0.0,     15.634
c***
c***  section 1 elements
c***
c***  waste contents
type,1   $mat,7
e, 100,  101,  111,  111
e, 101,  102,  112,  111
```

```
c***  canister
mat,1
e, 102,  103,  113,  112
c***  polystyrene inner spacer
mat,3
e, 103,  104,  128,  113
e, 113,  128,  114,  114
e, 128,  129,  115,  114
e, 129,  130,  116,  115
e, 130,  131,  117,  116
e, 131,  146,  147,  117
e, 132,  145,  146,  131
e, 110,  144,  145,  132
c***  waste contents
mat,7
e, 106,  107,  118,  118
e, 107,  119,  118,  118
e, 107,  120,  119,  119
e, 107,  121,  120,  120
e, 107,  122,  121,  121
e, 107,  108,  122,  122
e, 105,  106,  118,  123
e, 118,  119,  124,  123
e, 119,  120,  125,  124
e, 120,  121,  126,  125
e, 121,  122,  127,  126
e, 108,  109,  127,  122
c***  canister
mat,1
e, 104,  105,  123,  128
e, 123,  124,  129,  128
e, 124,  125,  130,  129
e, 125,  126,  131,  130
e, 126,  127,  132,  131
e, 109,  110,  132,  127
c***  steel drum
type,5   $mat,2   $real,5
e, 144,  145,  148
e, 145,  146,  149
e, 146,  147,  150
c***  air gap/conduction link
type,2   $mat,6  $real,11
e, 144,  148
real,12
e, 145,  149
e, 146,  150
e, 147,  151
c***  overpack
c***  fiberglass insulation
type,1   $mat,5
e, 148,  152,  153,  149
e, 149,  153,  154,  150
e, 150,  154,  155,  151
c***  polyurethane insulation
mat,4
e, 152,  156,  157,  153
e, 153,  157,  158,  154
e, 154,  158,  159,  155
e, 156,  160,  161,  157
e, 157,  161,  162,  158
e, 158,  162,  163,  159
c***  galvanized steel
type,8   $real,15   $mat,8
e, 160,  161,  999
e, 161,  162,  999
e, 162,  163,  999
c***
c***  section 2 elements
c***
c***  waste contents
type,1   $mat,7
e, 100,  111,  201,  201
e, 111,  112,  202,  201
c***  canister
mat,1
e, 112,  113,  203,  202
```

```
c***  polystyrene inner spacer
mat,3
e, 113,  228,  204,  203
e, 113,  114,  228,  228
e, 114,  115,  229,  228
e, 115,  116,  230,  229
e, 116,  117,  231,  230
e, 117,  147,  246,  231
e, 231,  246,  245,  232
e, 232,  245,  244,  210
c***  waste contents
mat,7
e, 207,  206,  218,  218
e, 207,  218,  219,  219
e, 207,  219,  220,  220
e, 207,  220,  221,  221
e, 207,  221,  222,  222
e, 207,  222,  208,  208
e, 205,  223,  218,  206
e, 223,  224,  219,  218
e, 224,  225,  220,  219
e, 225,  226,  221,  220
e, 226,  227,  222,  221
e, 227,  209,  208,  222
c***  canister
mat,1
e, 204,  228,  223,  205
e, 228,  229,  224,  223
e, 229,  230,  225,  224
e, 230,  231,  226,  225
e, 231,  232,  227,  226
e, 232,  210,  209,  227
c***  steel drum
type,5   $mat,2   $real,5
e,  147,  246,  151
e, 246,  245,  250
e, 245,  244,  249
c***  air gap/conduction link
type,2   $mat,6  $real,12
e, 246,  250
e, 245,  249
e, 244,  248
c***  fiberglass insulation
type,1   $mat,5
e, 248,  249,  253,  252
e, 249,  250,  254,  253
e, 250,  151,  155,  254
c***  polyurethane insulation
mat,4
e, 252,  253,  257,  256
e, 253,  254,  258,  257
e, 254,  155,  159,  258
e, 256,  257,  261,  260
e, 257,  258,  262,  261
e, 258,  159,  163,  262
c***  galvanized steel
type,8   $real,15   $mat,8
e, 163,  262,  999
e, 262,  261,  999
e, 261,  260,  999
c***
c***  section 3 elements
c***
c***  waste contents
type,1   $mat,7
e, 100,  201,  311,  311
e, 201,  202,  312,  311
c***  canister
mat,1
e, 202,  203,  313,  312
c***  polystyrene inner spacer
mat,3
e, 203,  204,  328,  313
e, 313,  328,  314,  314
e, 328,  329,  315,  314
e, 329,  330,  316,  315
```

```
e, 330,  331,  317,  316
e, 331,  346,  347,  317
e, 332,  345,  346,  331
e, 210,  244,  345,  332
c***  waste contents
mat,7
e, 207,  318,  206,  206
e, 207,  319,  318,  318
e, 207,  320,  319,  319
e, 207,  321,  320,  320
e, 207,  322,  321,  321
e, 207,  208,  322,  322
e, 205,  206,  318,  323
e, 318,  319,  324,  323
e, 319,  320,  325,  324
e, 320,  321,  326,  325
e, 321,  322,  327,  326
e, 322,  208,  209,  327
c***  canister
mat,1
e, 205,  323,  328,  204
e, 323,  324,  329,  328
e, 324,  325,  330,  329
e, 325,  326,  331,  330
e, 326,  327,  332,  331
e, 327,  209,  210,  332
c***  steel drum
type,5   $mat,2   $real,5
e, 244,  345,  248
e, 345,  346,  349
e, 346,  347,  350
c***  air gap/conduction link
type,2   $mat,6  $real,12
e, 345,  349
e, 346,  350
e, 347,  351
c***  fiberglass insulation
type,1   $mat,5
e, 248,  252,  353,  349
e, 349,  353,  354,  350
e, 350,  354,  355,  351
c***  polyurethane insulation
mat,4
e, 252,  256,  357,  353
e, 353,  357,  358,  354
e, 354,  358,  359,  355
e, 256,  260,  361,  357
e, 357,  361,  362,  358
e, 358,  362,  363,  359
c***  galvanized steel
type,8   $real,15   $mat,8
e, 260,  361,  999
e, 361,  362,  999
e, 362,  363,  999
c***
c***  section 4 elements
c***
c***  waste contents
type,1   $mat,7
e, 100,  311,  401,  401
e, 311,  312,  402,  401
c***  canister
mat,1
e, 312,  313,  403,  402
c***  polystyrene inner spacer
mat,3
e, 403,  313,  428,  404
e, 313,  314,  428,  428
e, 314,  315,  429,  428
e, 315,  316,  430,  429
e, 316,  317,  431,  430
e, 317,  347,  446,  431
e, 431,  446,  445,  432
e, 432,  445,  444,  410
c***  waste contents
mat,7
```

```
e, 407,  406,  418,  418
e, 407,  418,  419,  419
e, 407,  419,  420,  420
e, 407,  420,  421,  421
e, 407,  421,  422,  422
e, 407,  422,  408,  408
e, 405,  423,  418,  406
e, 423,  424,  419,  418
e, 424,  425,  420,  419
e, 425,  426,  421,  420
e, 426,  427,  422,  421
e, 427,  409,  408,  422
c***  canister
mat,1
e, 404,  428,  423,  405
e, 428,  429,  424,  423
e, 429,  430,  425,  424
e, 430,  431,  426,  425
e, 431,  432,  427,  426
e, 432,  410,  409,  427
c***  steel drum
type,5   $mat,2   $real,5
e, 347,  446,  450
e, 446,  445,  449
e, 445,  444,  448
c***  air gap/conduction link
type,2   $mat,6  $real,12
e, 446,  450
e, 445,  449
e, 444,  448
c***  fiberglass insulation
type,1   $mat,5
e, 448,  449,  453,  452
e, 449,  450,  454,  453
e, 450,  351,  355,  454
c***  polyurethane insulation
mat,4
e, 452,  453,  457,  456
e, 453,  454,  458,  457
e, 454,  355,  359,  458
e, 456,  457,  461,  460
e, 457,  458,  462,  461
e, 458,  359,  363,  462
c***  galvanized steel
type,8   $real,38   $mat,8
e, 363,  462,  999
real,37
e, 462,  461,  999
real,36
e, 461,  460,  999
type,9   $real,28  $mat,9
e, 363,  462,  998
real,27
e, 462,  461,  997
real,26
e, 461,  460,  996
c***
c***  section 5 elements
c***
c***  waste contents
type,1   $mat,7
e, 100,  401,  511,  511
e, 401,  402,  512,  511
c***  canister
mat,1
e, 402,  403,  513,  512
c***  polystyrene inner spacer
mat,3
e, 403,  404,  528,  513
e, 513,  528,  514,  514
e, 528,  529,  515,  514
e, 529,  530,  516,  515
e, 530,  531,  517,  516
e, 531,  546,  547,  517
e, 532,  545,  546,  531
e, 410,  444,  545,  532
```

```
c***  waste contents
mat,7
e, 407,  518,  406,  406
e, 407,  519,  518,  518
e, 407,  520,  519,  519
e, 407,  521,  520,  520
e, 407,  522,  521,  521
e, 407,  408,  522,  522
e, 405,  406,  518,  523
e, 518,  519,  524,  523
e, 519,  520,  525,  524
e, 520,  521,  526,  525
e, 521,  522,  527,  526
e, 522,  408,  409,  527
c***  canister
mat,1
e, 405,  523,  528,  404
e, 523,  524,  529,  528
e, 524,  525,  530,  529
e, 525,  526,  531,  530
e, 526,  527,  532,  531
e, 527,  409,  410,  532
c***  steel drum
type,5   $mat,2   $real,5
e, 444,  545,  549
e, 545,  546,  550
e, 546,  547,  551
c***  air gap/conduction link
type,2   $mat,6  $real,12
e, 545,  549
e, 546,  550
e, 547,  551
c***  fiberglass insulation
type,1   $mat,5
e, 448,  452,  553,  549
e, 549,  553,  554,  550
e, 550,  554,  555,  551
c***  polyurethane insulation
mat,4
e, 452,  456,  557,  553
e, 553,  557,  558,  554
e, 554,  558,  559,  555
e, 456,  460,  561,  557
e, 557,  561,  562,  558
e, 558,  562,  563,  559
c***  galvanized steel
type,5   $real,35   $mat,8
e, 460,  561,  999
real,34
e, 561,  562,  999
real,33
e, 562,  563,  999
type,9   $real,25  $mat,9
e, 460,  561,  995
real,24
e, 561,  562,  994
real,23
e, 562,  563,  993
c***
c***  section 6 elements
c***
c***  waste contents
type,1   $mat,7
e, 601,  100,  511,  511
e, 602,  601,  511,  512
c***  canister
mat,1
e, 603,  602,  512,  513
c***  polystyrene inner spacer
mat,3
e, 604,  603,  513,  628
e, 628,  513,  514,  514
e, 628,  514,  515,  629
e, 629,  515,  516,  630
e, 630,  516,  517,  631
e, 631,  517,  547,  646
```

```
e, 632,  631,  646,  645
e, 644,  610,  632,  645
c***  waste contents
mat,7
e, 607,  606,  618,  618
e, 607,  618,  619,  619
e, 607,  619,  620,  620
e, 607,  620,  621,  621
e, 607,  621,  622,  622
e, 608,  607,  622,  622
e, 606,  605,  623,  618
e, 618,  623,  624,  619
e, 619,  624,  625,  620
e, 621,  620,  625,  626
e, 622,  621,  626,  627
e, 609,  608,  622,  627
c***  canister
mat,1
e, 605,  604,  628,  623
e, 623,  628,  629,  624
e, 624,  629,  630,  625
e, 625,  630,  631,  626
e, 627,  626,  631,  632
e, 610,  609,  627,  632
c***  steel drum
type,5   $mat,2   $real,5
e, 547,  646,  650
e, 646,  645,  649
e, 645,  644,  648
c***  air gap/conduction link
type,2   $mat,6  $real,12
e, 646,  650
e, 645,  649
real,11
e, 644,  648
c***  fiberglass insulation
type,1   $mat,5
e, 652,  648,  649,  653
e, 653,  649,  650,  654
e, 654,  650,  551,  555
c***  polyurethane insulation
mat,4
e, 656,  652,  653,  657
e, 657,  653,  654,  658
e, 658,  654,  555,  559
e, 660,  656,  657,  661
e, 661,  657,  658,  662
e, 662,  658,  559,  563
c***  galvanized steel
type,5   $real,32   $mat,8
e, 563,  662,  999
real,31
e, 662,  661,  999
real,30
e, 661,  660,  999
type,9   $real,22  $mat,9
e, 563,  662,  992
real,21
e, 662,  661,  991
real,20
e, 661,  660,  990
c***  steady state
/solu
antype,trans
/title, ambient temp = 115 F, no solar insolation
/title, fire accident/initial steady state
c***
c***  step 1
timint,off
time,1.e-6
outpr,nsol,1
outres,nsol,1
toffst,460.
tunif,tair
kbc,1
d,999,temp,tair
```

```
f,990,heat,0.
f,991,heat,0.
f,992,heat,0.
f,993,heat,0.
f,994,heat,0.
f,995,heat,0.
f,996,heat,0.
f,997,heat,0.
f,998,heat,0.
c***  heat load
c***  internal heat generation
c***  qgen = (10.25/182.46)     * 3 w/canister
esel,s,mat,,7
bfe,all,hgen,,qgen
esel,all
c***  natural convection at overpack external surface
esel,s,mat,,8
sfe,all,1,conv,0,-8
esel,all
c***  natural convection between overpacks
esel,s,mat,,9
sfe,all,1,conv,0,-9
esel,all
solve
c***
c***  step 2
/title, fire accident/heat up to 1475 F
timint,on
time,(2.0/60.0)
deltim,0.001,0.001,10.0,on
autos,on
kbc,0
d,999,temp,1475.
c***  natural convection at overpack external surface
esel,s,mat,,8
sfe,all,1,conv,0,-18
esel,all
c***  natural convection between overpacks
esel,s,mat,,9
sfe,all,1,conv,0,-19
esel,all
solve
c***
c***  step 3
/title, fire accident/10 min. at 1475 F
time,(12.0/60.0)
deltim,0.001,0.001,10.0,on
autos,on
kbc,0
solve
c***
c***  step 4
/title, fire accident/20 min. at 1475 F
time,(22.0/60.0)
kbc,0
solve
c***
c***  step 5
/title, fire accident/30 min. at 1475 F
time,(32.0/60.0)
kbc,0
solve
c***
c***  step 6
/title, fire accident/cool down to 115 F
time,(34.0/60.0)
deltim,0.001,0.001,10.0,on
autos,on
kbc,0
d,999,temp,115.
c***  natural convection at overpack external
esel,s,mat,,8
sfe,all,1,conv,0,-8
esel,all
c***  natural convection between overpacks
esel,s,mat,,9
```

```
sfe,all,1,conv,0,-9
esel,all
solve
c***
c***  step 7
/title, fire accident/30 min. at 115 F after the accident
time,(64.0/60.0)
deltim,0.001,0.001,10.0,on
autos,on
kbc,0
solve
c***
c***  step 8
/title, fire accident/200 hr at 115 F after the accident
time,(12004.0/60.0)
kbc,0
solve
finish
```

Checklist for Checking of Analysis/Calculations

Document Checked - Number: N/A **Revision:** 0

Title: Doorstop Container Thermal Evaluation

Yes	No	N/A	
[x]	[ ]	[ ]	Problem completely defined.
[x]	[ ]	[ ]	Appropriate analytical method used.
[x]	[ ]	[ ]	Necessary assumptions are approriate, explicitly stated, and stated.
[x]	[ ]	[ ]	Computer codes and data files documented.
[x]	[ ]	[ ]	Data used in calculations explicitly stated in document.
[ ]	[ ]	[x]	Sources of non-standard formulae/data are referenced and the correctness of the reference verified.
[x]	[ ]	[ ]	Data checked for consistency with original source information as applicable.
[ ]	[ ]	[x]	Mathematical derivations checked including dimensional consistency of results.
[x]	[ ]	[ ]	Models appropriate and used within range of validity or use outside range of established validity justified.
[ ]	[ ]	[x]	Hand calculations checked for errors.
[x]	[ ]	[ ]	Code run streams correct and consistent with analysis documentation.
[x]	[ ]	[ ]	Code output consistent with input and with results reported in analysis documentation.
[x]	[ ]	[ ]	Acceptability limits on analytical results applicable and supported. Limits checked against sources.
[x]	[ ]	[ ]	Safety Margins consistent with good engineering practices.
[x]	[ ]	[ ]	Conclusions consistent with analytical results and applicable limits.
[x]	[ ]	[ ]	Results and conclusions address all points required in the problem statement.

I have checked the analysis/calculation and it is complete and accurate to the best of my knowledge.

Engineer/Checker 1/20/96 Date

Note: Any hand calculations, notes or summaries generated as part of this check should be signed, dated, and attached to this checklist. Material should be labeled and recorded so that it is intelligible to a technically qualified third party.

9.0 PRESSURE AND GAS GENERATION EVALUATION

The maximum content of the Doorstop Sample Carrier System is seven, 125 mL (4.3 fl oz) samples, one sample per Doorstop container. When fully loaded, the package contains 875 mL (29.6 fl oz) of tank waste. The tank waste is known to generate hydrogen and other gases. The total gas generation within a Doorstop container was calculated. In addition to pressure generation, the production of hydrogen results in a potential flammability hazard. The flammability is the limiting gas generation hazard. As a result of the flammability hazard, an administrative control is placed on the length of time the Doorstop container may be sealed. A shipping window of half the estimated time to reach the lower flammability limit (LFL) of the gas mixture is used to ensure safe transport of the samples.

9.1 GAS GENERATION

The evaluation can be found in Part B, Section 9.3.1, describing the process used to determine the generation rate and allowable seal time (shipping window) for the Doorstop container. A gas mixture generation rate was determined in this evaluation. Table B9-1 details allowable seal time (shipping window), pressure rise during seal time, and total gas generation rate.

Table B9-1. Gas Generation in 875 mL (29.6 oz) Samples in the Doorstop Sample Carrier System.

	Worst Case Material		
Payload Volume	1.6 mL	20 mL	125 mL
Shipping window	39 days	6.4 days	4.8 days
Pressure rise to 50% lower flammability limit (psi)	0.455	0.456	0.456
Pressure rise in 45 days (psi)	0.52	3.19	4.24

9.2 PACKAGE PRESSURE

The package's ability to withstand pressure is discussed in Part B, Section 7.6.3. The Doorstop container is shown to be capable of withstanding an internal pressure of 14.44 psi greater than the external pressure. That pressure accounts for the maximum pressure of 4.24 psi calculated to be produced in 45 days.

9.3 APPENDICES

9.3.1 Hydrogen Gas Generation Calculations

ENGINEERING SAFETY EVALUATION

Subject Hydrogen Gas Generation in the Doorstop Container Page 1 of 13
Originator J. S. Boettger J. S. Boettger Date 12/16/96
Checker J. E. Mercado J. E. Mercado Date 12/16/96

I. Objectives:

Samples will be shipped from the Tank Waste Remediation System (TWRS) double shell tanks and single shell tanks in the Doorstop Sample Carrier (Doorstop). The tank waste is known to generate hydrogen as well as other gases and an evaluation of gas generation is necessary to ensure transportation safety. The purpose of this analysis is to quantify the amount of hydrogen and other gases generated within the container, and to determine the pressure build-up from the generated gases. A shipping window of half of the estimated time to reach the lower flammability limit (LFL) of the gas mixture will be used to ensure safe transport of the samples. Decay heat is also calculated.

II. References:

Graves, R. D., 1994, *Topical Report on Flammable Gases in Nonburping Waste Tanks*, WHC-SD-WM-SARR-015, Westinghouse Hanford Company, Richland, Washington.

Green, J. R., K. Hillesland, V. E. Roetman, and J. G. Field, 1995, *Radcalc for Windows*, Version 1.0, Westinghouse Hanford Company, Richland, Washington.

Hopkins, J. D., 1994, *Criteria for Flammable Gas Watch List Tanks*, WHC-EP-0702, Westinghouse Hanford Company, Richland, Washington.

Kummerer, M., 1995, *Pressure and Gas Generation Evaluation for LLCE Containers*, Draft Report, Westinghouse Hanford Company, Richland, Washington.

Meisel, D., C. D. Jonah, S. Kapoor, M. S. Matheson, and M. C. Sauer, Jr., 1993, *Radiolytic and Radiolytically Induced Generation of Gases from Synthetic Wastes*, ANL-93/43, Argonne National Laboratory, Argonne, Illinois.

NRC, 1984, *Clarification of Conditions for Waste Shipments Subject to Hydrogen Gas Generation*, IN 84-72, Nuclear Regulatory Commission, Washington, D.C.

WHC, 1995, *Safety Analysis Report for Packaging for the LR-56*, WHC-SD-TP-SARP-009, Westinghouse Hanford Company, Richland, Washington.

III. Results and Conclusions:

The following table summarizes the results calculated using the methods described in Section IV of this report. Three worst case scenarios for the Doorstop are considered.

ENGINEERING SAFETY EVALUATION

Subject Hydrogen Gas Generation in the Doorstop Container Page 2 of 13
Originator J. S. Boettger Date 12/16/96
Checker J. E. Mercado Date 12/16/96

Table 1. Summary of Results for the Doorstop Sample Carrier.

	Worst Cases		
Payload volume	1.6 ml	20 ml	125 ml
Half of the time to reach LFL	39 days	6.4 days	4.8 days
Pressure rise to 50% LFL (psi)	0.455	0.456	0.456
Pressure rise in 45 days (psi)	0.52	3.19	4.24
Decay heat (W)	0.000852	0.0113	0.0694

For all cases in this report, the LFL of the mixture is reached when hydrogen gas equals 2.5% by volume. The NRC allows a shipping envelope of half the time it takes to reach 5% hydrogen gas by volume or the LFL of gas mixtures (NRC 1984). Because the LFL of the gas mixture is reached when the hydrogen gas reaches 2.5% by volume (WHC 1995), the shipping window is determined to be half of the time it takes to reach 2.5% hydrogen gas.

IV. Engineering Evaluation:

Tank waste generates hydrogen, oxygen, nitrous oxide, ammonia, and methane by radiolytic and chemical interactions. Many reports have been generated regarding flammable gas generation in the TWRS tanks and a method for estimating the expected gas generation from tank waste materials was developed in *Topical Report on Flammable Gases in Nonburping Waste Tanks* (Graves 1994). The method focuses on both radiolytical and chemical generation of gases. The method uses empirical data from experiments and sample data from waste.

Radiolytic Generation

The method used in *Topical Report on Flammable Gases in Nonburping Waste Tanks* (Graves 1994) for the radiolytic generation of hydrogen is known as the G value method and is a well accepted calculational technique. The G value method has also been developed in the computer code Radcalc for Windows (Green et al. 1995). The computer code was accordingly used to determine the hydrogen generation from radiolytic interactions. It is also used to calculate decay heat. The input parameters used in the code for the two containers are given in Table 2 and the source term used in the code input files is given in Table 3. The source term used was taken from the worst case source terms developed for the Doorstop SARP. The source term development is discussed in Part B, Section 2.0 of the SARP.

A container model for the Doorstop is contained within RadCalc for Windows and is used in the determination of gamma absorption fractions. For more information on this model see Volume II, *Technical Manual*, of the RadCalc for Windows computer code (Green et al. 1995).

ENGINEERING SAFETY EVALUATION

Subject Hydrogen Gas Generation in the Doorstop Container Page 3 of 13
Originator J. S. Boettger Date 12/16/96
Checker J. E. Mercado Date 12/16/96

Table 2. Container Input Values.

	Doorstop		
Waste volume	1.6 ml	20 ml	125 ml
Waste mass	2.56 g	32.0 g	200 g
Waste density	1.6 g/cm^3	1.6 g/cm^3	1.6 g/cm^3
Void volume	82.1 ml	177 ml	821 ml

Essential to the G value method of calculating the radiolytic production of hydrogen gas is the value chosen for $G(H_2)$. $G(H_2)$ is equal to the number of molecules generated per 100 eV of ionizing radiation. The $G(H_2)$ value used by Kummerer in the LR-56 SARP (WHC 1995) and in an analysis of the Long Length Contaminated Equipment (Kummerer 1995) is 0.119. She arrives at this value by adding the G value for dissolved organic compound solutions containing nitrates/nitrites to a variable dependent upon the concentration of organics (TOC) within the tanks. This calculation is described in detail in the LR-56 SARP. The $G(H_2)$ value developed in the SARP is adopted for use in this analysis for gamma and beta interactions. For alpha interactions the value was conservatively increased by a factor of four (Green et al. 1995).

The Radcalc input/output files for all the Doorstop cases run are listed in the Appendix of this evaluation. Radcalc assumes a waste temperature of 20°C when calculating hydrogen generation. The Ideal Gas Law is used to convert this value to the generation rate at 82°C. The results of the radiolytic generation of hydrogen gas and heat generated from radioactive decay are given in Table 4.

ENGINEERING SAFETY EVALUATION

Subject Hydrogen Gas Generation in the Doorstop Container Page 4 of 13
Originator J. S. Boettger Date 12/16/96
Checker J. E. Mercado Date 12/16/96

Table 3. Worst Case Source Terms for the Doorstop.

Nuclide	Activity Concentration (Ci/L)	1.6 ml Waste Volume	20 ml Waste Volume	125 ml Waste Volume
^{14}C	4.3 E-06	6.9 E-09	8.6 E-08	5.4 E-07
^{60}Co	1.3 E-02	2.1 E-05	2.6 E-04	1.6 E-03
^{79}Se	4.6 E-07	7.4 E-10	9.2 E-09	5.8 E-08
^{90}Sr	7.8 E+01	1.2 E-01	1.6 E+00	9.8 E+00
^{90}Y	7.8 E+01	1.2 E-01	1.6 E+00	9.8 E+00
^{99}Tc	3.2 E-01	5.1 E-04	6.4 E-03	4.0 E-02
^{106}Ru	1.9 E-06	3.0 E-09	3.8 E-08	2.4 E-07
^{106}Rh	1.9 E-06	3.0 E-09	3.8 E-08	2.4 E-07
^{125}Sb	4.9 E-03	7.8 E-06	9.8 E-05	6.1 E-04
^{129}I	1.7 E-04	2.7 E-07	3.4 E-06	2.1 E-05
^{134}Cs	2.5 E-04	4.0 E-07	5.0 E-06	3.1 E-05
^{137}Cs	2.7 E+00	4.3 E-03	5.4 E-02	3.4 E-01
^{137m}Ba	2.6 E+00	4.2 E-03	5.2 E-02	3.3 E-01
^{144}Ce	9.2 E-09	1.5 E-11	1.8 E-10	1.2 E-09
^{144}Pr	9.2 E-09	1.5 E-11	1.8 E-10	1.2 E-09
^{154}Eu	3.0 E-01	4.8 E-04	6.0 E-03	3.8 E-02
^{155}Eu	1.4 E-04	2.2 E-07	2.8 E-06	1.8 E-05
^{237}Np	2.7 E-02	4.3 E-05	5.4 E-04	3.4 E-03
^{238}Pu	5.1 E-03	8.2 E-06	1.0 E-04	6.4 E-04
^{239}Pu	4.3 E-02	6.9 E-05	8.6 E-04	5.4 E-03
^{240}Pu	4.3 E-02	6.9 E-05	8.6 E-04	5.4 E-03
^{241}Pu	1.0 E-01	1.6 E-04	2.0 E-03	1.3 E-02
^{241}Am	3.0 E-01	4.8 E-04	6.0 E-03	3.8 E-02
^{242}Cm	5.4 E-09	8.6 E-12	1.1 E-10	6.8 E-10
^{244}Cm	1.6 E-03	2.6 E-06	3.2 E-05	2.0 E-04
TOTALS	1.6 E+02	2.5 E-01	3.2 E+00	2.1 E+01

ENGINEERING SAFETY EVALUATION

Originator J. S. Boettger Date 12/16/96
Checker J. E. Mercado Date 12/16/96

Table 4. Radiolytic Generation Rates and Decay Heat for the Doorstop.

	Waste Volume		
	1.6 ml	20 ml	125 ml
H_2 production rate (cm^3/h)	0.000964	0.0128	0.0787
Decay heat (W)	0.000852	0.0113	0.0694

Chemical Generation Rate

The chemical generation rate of hydrogen is dependent on the organic species, temperature, total organic carbon (TOC), and activation energy. Tank waste and void volume temperature are assumed to be 82° C (Kummerer 1995). Experiments with tank waste simulant has lead to the following equation which can be used to estimate the chemical generation rate:

$$V_{H_2,C} = V_{H_2,E} V_{LIQ} \frac{TOC_w}{TOC_e} e^{-\frac{E_a}{R}\left(\frac{1}{T_w}-\frac{1}{T_e}\right)}$$

Where:

$V_{H2,C}$	=	Hydrogen chemical generation rate (L/day)
$V_{H2,E}$	=	Hydrogen generation rate in experimental solution at 60 °C, volume adjusted to vapor space temperature (3.3×10^{-4} L/day/L solution)
V_{liq}	=	Waste volume (see Table 2) (L)
E_a	=	Activation energy (4.09×10^4 J/mol) (Meisel 1993)
R	=	Universal gas constant (8.314 J/mol K)
T_W	=	Waste temperature (355 K)
T_e	=	Temperature of experimental solution (333 K)
TOC_w	=	TOC in the waste, based on SST measurements (52 g/L)
TOC_e	=	TOC in the experimental solution (23 g/L)

The generation rate of hydrogen at 355 K is 1.864×10^{-3} L/day/L solution. The generation rates for the Doorstop are given in Table 5, converted to cm^3/hr.

Table 5. Chemical Generation Rates.

	Waste Volume		
	1.6 ml	20 ml	125 ml
H_2 production rate (cm^3/h)	0.000124	0.00155	0.00971

ENGINEERING SAFETY EVALUATION

Subject Hydrogen Gas Generation in the Doorstop Container Page 6 of 13
Originator J. S. Boettger Date 12/16/96
Checker J. E. Mercado Date 12/16/96

Lower Flammability Limit Calculation

Hydrogen gas in combination with other gases generated from tank waste reaches the mixture lower flammability limit (LFL) when hydrogen totals 2.5% by volume (WHC 1995). Accordingly, the time to reach the LFL of the mixture can be derived by the following:

$$t = 0.025 \left(\frac{V_v}{r_{gen}} \right)$$

Where:

t = time to 2.5% hydrogen
V_v = void volume (cm^3)
r_{gen} = generation rate (cm^3/unit time)

Total generation rate and void volumes for the Doorstop are substituted in the above equation. The results are summarized in Table 6.

Table 6. Total Hydrogen Gas Generation Rates for the Doorstop.

	Waste Volume		
	1.6 ml	20 ml	125 ml
Chemical generation (cm^3/h)	0.000124	0.00155	0.00971
Radiolytic generation (cm^3/h)	0.000964	0.0128	0.0787
Total H_2 generation (cm^3/h)	0.00109	0.0144	0.0884
Time to reach LFL of mixture	78 days	13 days	9.7 days
Half the time to reach LFL	39 days	6.4 days	4.8 days

Total Pressure Rise

In addition to hydrogen gas generation, chemical and radiolytical processes generate other gases that will affect the pressure rise within the container. Radiolytic generation produces other gases in a ratio to hydrogen gas of 1.5:1. Chemical generation produces 43.5% hydrogen gas, the remaining 56.5% consists of other gases (Kummerer 1995). These ratios can be used to calculate the total gas generation rates for each case (See Table 7 below). The rate of pressure rise can then be determined using the following equation (WHC 1995):

ENGINEERING SAFETY EVALUATION

$$p = \frac{(r_{gen})(C_a)(R)(T_w)}{(V_v)}(C_{pres})$$

Where:

p	= rate of pressure rise (psi/h)
c_a	= constant (1/29.13 mol/L x 1/1000 L/cm³)
R	= constant (82.057 cm³ atm/mol K)
T_w	= temperature of waste (355 K)
V_v	= container void volume (see Table 2) (cm³)
r_{gen}	= Total generation rate (see Table 7) (cm³/h)
c_{pres}	= pressure conversion (14.7 psi/atm)

The total pressure rise to the time needed to reach the LFL can then be found using the times taken to reach 2.5% hydrogen gas by volume from Table 6. The results for the Doorstop container are summarized in Table 7.

Table 7. Pressure Rise for the Doorstop.

	Waste Volume		
	1.6 ml	20 ml	125 ml
Total gas generation rate (cm³/h)	0.00270	0.0356	0.219
Pressure rise to LFL (psi)	0.910	0.911	0.911
Pressure rise to half of the LFL (psi)	0.455	0.456	0.456
Pressure rise in 45 days (psi)	0.52	3.19	4.24

ENGINEERING SAFETY EVALUATION

Subject Hydrogen Gas Generation in the Doorstop Container Page 8 of 13
Originator J. S. Boettger Date 12/16/96
Checker J. E. Mercado Date 12/16/96

V. Appendix:

Worst Case - 1.6 ml

Radcalc for Windows 1.0

Date: 08-09-96 08:45

Performed By:

Checked By:

File: DSTOPWC1.RAD

========== Input Information ==========

Source from input:

Radionuclide:	Curies:
C-14	6.90e-009
Co-60	2.10e-005
Se-79	7.40e-010
Sr-90	1.20e-001
Y-90	1.20e-001
Tc-99	5.10e-004
Ru-106	3.00e-009
Rh-106	3.00e-009
Sb-125	7.80e-006
I-129	2.70e-007
Cs-134	4.00e-007
Cs-137	4.30e-003
Ba-137m	4.20e-003
Ce-144	1.50e-011
Pr-144	1.50e-011
Eu-154	4.80e-004
Eu-155	2.20e-007
Np-237	4.30e-005
Pu-238	8.20e-006
Pu-239	6.90e-005
Pu-240	6.90e-005
Pu-241	1.60e-004
Am-241	4.80e-004
Cm-242	8.60e-012
Cm-244	2.60e-006

Waste Form: Normal
Physical Form: Solid
Container Type: Doorstop Sample Carrier

Package Void Volume: 82.1 cc
Waste Volume: 1.60 cc
Waste Mass: 2.56 g
Waste True Density: 1.60 g/cc

Date to begin source decay: 8:00 Aug. 9, 1996
Date container sealed: 8:00 Aug. 9, 1996
Days to decay source before seal time: 0.00 days

ENGINEERING SAFETY EVALUATION

Subject Hydrogen Gas Generation in the Doorstop Container Page 9 of 13
Originator J. S. Boettger Date 12/16/96
Checker J. E. Mercado Date 12/16/96

Worst Case - 1.6 ml (cont'd)

Calculate number of days sealed until 2.50% hydrogen is reached.

Entered G Values:

G Alpha	G Beta	G Gamma
0.476	0.119	0.119

Comments:
RadCalc calculations using:

Doorstop Sample Carrier
Configuration 1 - Sample Pipette
Worst Case Scenario
Waste Volume: 1.6 ml
Package Void Volume: 82.1 ml
Waste Density: 1.6 g/ml

========== Calculated Results ==========

The sealed container will generate 2.50 % hydrogen in 90.94 days
This corresponds to date: 7:00 Nov. 8, 1996
H2 Volume: 2.10 cc
H2 Generation Rate: 0.000964 cc/hour

Heat Generated: 0.000852 Watts
Partial Pressure (H2): 2.60 kPa
Total Pressure (H2 and Air): 104. kPa

ENGINEERING SAFETY EVALUATION

Worst Case - 20 ml

Radcalc for Windows 1.0

Date: 08-09-96 09:29

Performed By: J S Boettger

Checked By: J. E. Mercado

File: DSTOPWC2.RAD

========== Input Information ==========

Source from input:

Radionuclide:	Curies:
C-14	8.60e-008
Co-60	2.60e-004
Se-79	9.20e-009
Sr-90	1.60e+000
Y-90	1.60e+000
Tc-99	6.40e-003
Ru-106	3.80e-008
Rh-106	3.80e-008
Sb-125	9.80e-005
I-129	3.40e-006
Cs-134	5.00e-006
Cs-137	5.40e-002
Ba-137m	5.20e-002
Ce-144	1.80e-010
Pr-144	1.80e-010
Eu-154	6.00e-003
Eu-155	2.80e-006
Np-237	5.40e-004
Pu-238	1.00e-004
Pu-239	8.60e-004
Pu-240	8.60e-004
Pu-241	2.00e-003
Am-241	6.00e-003
Cm-242	1.10e-010
Cm-244	3.20e-005

Waste Form: Normal
Physical Form: Solid
Container Type: Doorstop Sample Carrier

Package Void Volume: 177. cc
Waste Volume: 20.0 cc
Waste Mass: 32.0 g
Waste True Density: 1.60 g/cc

Date to begin source decay: 8:00 Aug. 9, 1996
Date container sealed: 8:00 Aug. 9, 1996
Days to decay source before seal time: 0.00 days
Calculate number of days sealed until 2.50% hydrogen is reached.

ENGINEERING SAFETY EVALUATION

Subject Hydrogen Gas Generation in the Doorstop Container Page 11 of 13
Originator J. S. Boettger Date 12/16/96
Checker J. E. Mercado Date 12/16/96

Worst Case - 20 ml (cont'd)

Entered G Values:

G Alpha	G Beta	G Gamma
0.476	0.119	0.119

Comments:
RadCalc calculations using:

Doorstop Sample Carrier
Configuration 2 - Leak Pak
Worst Case Scenario
Waste Volume: 20 ml
Package Void Volume: 177 ml
Waste Density: 1.6 g/ml

========== Calculated Results ==========

The sealed container will generate 2.50 % hydrogen in 14.78 days
This corresponds to date: 3:00 Aug. 24, 1996
H2 Volume: 4.54 cc
H2 Generation Rate: 0.0128 cc/hour

Heat Generated: 0.0113 Watts
Partial Pressure (H2): 2.60 kPa
Total Pressure (H2 and Air): 104. kPa

ENGINEERING SAFETY EVALUATION

Originator J. S. Boettger Date 12/16/96
Checker J. E. Mercado Date 12/16/96

Worst Case - 125 ml

Radcalc for Windows 1.0

Date: 08-09-96 09:47

Performed By: J. S. Boettger

Checked By: J. E. Mercado

File: DSTOPWC3.RAD

========== Input Information ==========

Source from input:

Radionuclide:	Curies:
C-14	5.40e-007
Co-60	1.60e-003
Se-79	5.80e-008
Sr-90	9.80e+000
Y-90	9.80e+000
Tc-99	4.00e-002
Ru-106	2.40e-007
Rh-106	2.40e-007
Sb-125	6.10e-004
I-129	2.10e-005
Cs-134	3.10e-005
Cs-137	3.40e-001
Ba-137m	3.30e-001
Ce-144	1.20e-009
Pr-144	1.20e-009
Eu-154	3.80e-002
Eu-155	1.80e-005
Np-237	3.40e-003
Pu-238	6.40e-004
Pu-239	5.40e-003
Pu-240	5.40e-003
Pu-241	1.30e-002
Am-241	3.80e-002
Cm-242	6.80e-010
Cm-244	2.00e-004

Waste Form: Normal
Physical Form: Solid
Container Type: Doorstop Sample Carrier

Package Void Volume: 821. cc
Waste Volume: 125. cc
Waste Mass: 200. g
Waste True Density: 1.60 g/cc

Date to begin source decay: 8:00 Aug. 9, 1996
Date container sealed: 8:00 Aug. 9, 1996
Days to decay source before seal time: 0.00 days
Calculate number of days sealed until 2.50% hydrogen is reached.

ENGINEERING SAFETY EVALUATION

Subject Hydrogen Gas Generation in the Doorstop Container Page 13 of 13
Originator J. S. Boettger Date 12/16/96
Checker J. E. Mercado Date 12/16/96

Worst Case - 125 ml (cont'd)

Entered G Values:

G Alpha	G Beta	G Gamma
0.476	0.119	0.119

Comments:
RadCalc calculations using:

Doorstop Sample Carrier
Configuration 3 - Paint Can
Worst Case Scenario
Waste Volume: 125 ml
Package Void Volume: 821 ml
Waste Density: 1.6 g/ml

========== Calculated Results ==========

The sealed container will generate 2.50 % hydrogen in 11.15 days
This corresponds to date: 12:00 Aug. 20, 1996
H2 Volume: 21.0 cc
H2 Generation Rate: 0.0787 cc/hour

Heat Generated: 0.0694 Watts
Partial Pressure (H2): 2.60 kPa
Total Pressure (H2 and Air): 104. kPa

9.3.2 Hydrogen Gas Generation in the Doorstop Container - Addendum

ENGINEERING SAFETY EVALUATION

Subject Hydrogen Gas Generation in the Doorstop Container - Addendum Page 1 of 3
Originator J. S. Boettger Date 1/15/96
Checker J. E. Mercado Date 1/15/96

I. Objectives:

This addendum shows hydrogen generation rates and shipping windows using several fractions of the worst case source term. These scenarios provide a more accurate representation of actual shipments. All calculational methods are identical to the original evaluation, thus only the necessary tabulated results are given in this addendum. Please refer to the original evaluation for a more detailed description of the analysis.

II. Results and Conclusions:

The following table summarizes the results for the added source term source term scenarios.

Table 1a. Summary of Results for the Doorstop Sample Carrier (75% Worst Case).

	75% of Worst Case		
Payload volume	1.6 ml	20 ml	125 ml
Half of the time to reach LFL	50 days	8 days	6 days
Pressure rise to 50% LFL (psi)	0.454	0.454	0.454
Pressure rise in 45 days (psi)	0.40	2.47	3.29

Table 1b. Summary of Results for the Doorstop Sample Carrier (50% Worst Case).

	50% of Worst Case		
Payload volume	1.6 ml	20 ml	125 ml
Half of the time to reach LFL	70 days	11.5 days	8.5 days
Pressure rise to 50% LFL (psi)	0.452	0.452	0.452
Pressure rise in 45 days (psi)	0.29	1.76	2.33

Table 1c. Summary of Results for the Doorstop Sample Carrier (25% Worst Case).

	25% of Worst Case		
Payload volume	1.6 ml	20 ml	125 ml
Half of the time to reach LFL	117 days	19 days	14.5 days
Pressure rise to 50% LFL (psi)	0.447	0.447	0.447
Pressure rise in 45 days (psi)	0.17	1.04	1.38

ENGINEERING SAFETY EVALUATION

Originator J. S. Boettger JSB Date 1/15/96
Checker J. E. Mercado JEM Date 1/15/96

For all cases in this report, the LFL of the mixture is reached when hydrogen gas equals 2.5% by volume. The NRC allows a shipping envelope of half the time it takes to reach 5% hydrogen gas by volume or the LFL of gas mixtures (NRC 1984). Because the LFL of the gas mixture is reached when the hydrogen gas reaches 2.5% by volume (WHC 1995), the shipping window is determined to be half of the time it takes to reach 2.5% hydrogen gas.

III. Engineering Evaluation:

The worst case source term consists of the highest possible concentration of each radionuclide across all tanks. However, an actual shipment may contain radionuclides in concentrations significantly less than those in the worst case source term. Therefore, source terms were developed consisting of 75%, 50%, and 25% of the worst case concentrations. If the concentrations of all radionuclides are at or below the given percentage, then that percentage source term can be used. The source term percentage concentrations are given in Part B, Section 4.3.3 of the Doorstop SARP.

The radiolytic hydrogen generation rate is directly proportional to the concentration of the radionuclides. The chemical hydrogen generation rate is independant of radionuclide concentration. Table 2a is a reproduction of Table 6 from the original evaluation, while Tables 2b through 2d show the new results using the source term percentages.

Table 2a. Total Hydrogen Gas Generation Rates for the Doorstop (Worst Case).

	Waste Volume		
	1.6 ml	20 ml	125 ml
Chemical generation (cm^3/h)	0.000124	0.00155	0.00971
Radiolytic generation (cm^3/h)	0.000964	0.0128	0.0787
Total H_2 generation (cm^3/h)	0.00109	0.0144	0.0884
Time to reach LFL of mixture	78 days	13 days	9.7 days
Half the time to reach LFL	39 days	6.4 days	4.8 days

ENGINEERING SAFETY EVALUATION

Subject Hydrogen Gas Generation in the Doorstop Container - Addendum Page 3 of 3
Originator J. S. Boettger Date 1/15/96
Checker J. E. Mercado Date 1/15/96

Table 2b. Total Hydrogen Gas Generation Rates for the Doorstop (75% of Worst Case)

	Payload Volume		
	1.6 ml	20 ml	125 ml
Chemical generation (cm^3/h)	0.000124	0.00155	0.00971
Radiolytic generation (cm^3/h	0.000723	0.00960	0.0590
Total H_2 generation (cm^3/h)	0.000847	0.0112	0.0687
Time to reach LFL of mixture	100 days	16 days	12 days
Half the time to reach LFL	50 days	8 days	6 days

Table 2c. Total Hydrogen Gas Generation Rates for the Doorstop (50% of Worst Case)

	Payload Volume		
	1.6 ml	20 ml	125 ml
Chemical generation (cm^3/h)	0.000124	0.00155	0.00971
Radiolytic generation (cm^3/h	0.000482	0.00640	0.0394
Total H_2 generation (cm^3/h)	0.000606	0.00795	0.0491
Time to reach LFL of mixture	140 days	23 days	17 days
Half the time to reach LFL	70 days	11.5 days	8.5 days

Table 2d. Total Hydrogen Gas Generation Rates for the Doorstop (25% of Worst Case)

	Payload Volume		
	1.6 ml	20 ml	125 ml
Chemical generation (cm^3/h)	0.000124	0.00155	0.00971
Radiolytic generation (cm^3/h	0.000241	0.00320	0.0197
Total H_2 generation (cm^3/h)	0.000365	0.00475	0.0294
Time to reach LFL of mixture	234 days	38 days	29 days
Half the time to reach LFL	117 days	19 days	14.5 days

This page intentionally left blank.

10.0 PACKAGE TIEDOWN SYSTEM EVALUATION

10.1 TIEDOWN EVALUATION

The N-55 package containing the Doorstop Sample Carrier System is attached to its transport vehicle by a lift/tiedown assembly as shown in Figures B10-1 and B10-2. The N-55 is held in place by a frame, which fits over the top of the overpack and is held in place by four tiedown straps. The tiedown straps connect the frame to a baseplate, which, in turn, is bolted to the bed of the truck. The entire assembly except for the J bolts forms the tiedown assembly. The four tiedown straps are identified throughout the tiedown system evaluation as cables. While the parts are mislabeled, the evaluations are correct. The loads and resulting stresses are evaluated in Part B, Section 10.2. The evaluations show that the tiedown meets the regulatory requirements.

Figure B10-1. Tiedown Assembly Dimensions.

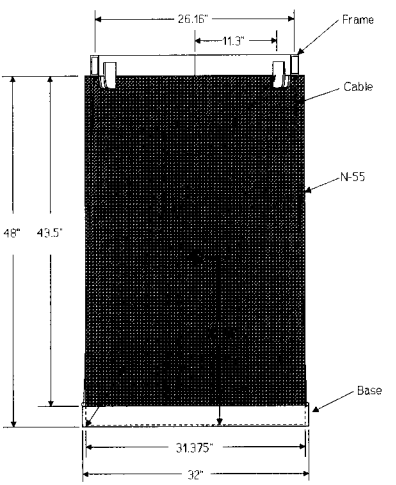

Figure B10-2. Tiedown Dimensions, Plan View.

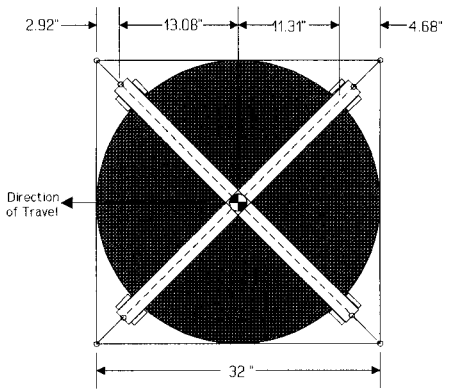

10.2 TIEDOWN DEVICES

The tiedown assembly is loaded by transportation loads as defined by 49 CFR 393.102 and 49 CFR 393.104. The required tiedown loads due to an acceleration of 0.5*g* acting on the package center of gravity are calculated in Part B, Section 10.2.1. This analysis considers vertical and lateral directions as well as an acceleration applied at a 45° angle to the direction of travel. The effect of gravity is conservatively ignored in the analyses below. This is because the specified loadings are not meant to reflect actual loads experienced by the tiedowns, but rather are to demonstrate a safe margin above expected transportation loads. The loaded gross weight of the N-55 in the Doorstop container configuration is assumed to be 363 kg (800 lb) (390 kg [860 lb] including the tiedown frame). Figures B10-1 and B10-2 illustrate the assembled package and tiedown assembly with appropriate dimensions.

The transportation load-induced stresses are calculated in Part B, Sections 10.2.2 through 10.2.8 and are to be compared with the manufacturer's working load limits for tiedown hardware. These are normally 1/5 of breaking loads. For the tiedown frame the working load limit is considered to be the lesser of 1/3 of material yield stress or 1/5 of material ultimate stress. A safety margin, SM, will be calculated to evaluate all stress calculations against the above allowables.

10.2.1 Acceleration Directional Loadings

The following sections evaluate the cable tension loadings based on vertical, horizontal, and oblique acceleration.

10.2.1.1 Vertical Direction Acceleration. Assume that only two of the tiedown straps are effective in resisting an upward acceleration of 0.5*g*:

$$T = \frac{0.5\,F}{\sin 84.6^\circ} = \frac{(0.5)\,(0.5)\,(800)}{0.996} = 200.8\ lb$$

10.2.1.2 Longitudinal and Lateral Direction Accelerations. Assume the package pivots at its lower corner (point A in Figure B10-3) and that the upper opposite corner of the N-55 forms a pivot point for the tiedown frame. This occurs because the frame is not tied to the overpack, but is only restrained from moving horizontally with respect to the N-55 by the tabs welded to the tiedown frame. All cables are thus in tension to provide equilibrium to the tiedown frame. The force components are shown in Figure B10-3.

Figure B10-3. Transport Load Components.

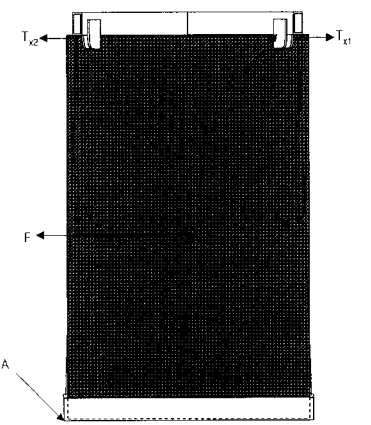

Writing an expression summing moments of the overall system about point A, using the dimensions shown in Figures B10-2 and B10-3:

$$(23.86)\,F = (2.92)\,T_{y2} - (48)\,T_{x2} + (29.08)\,T_{y1} + (48)\,T_{x1}$$

Using the assumption that the tiedown frame is free to pivot about point B results in the following expression for T_{y2} in terms of T_{y1}:

$$(24.39)\ T_{y2} = (1.77)\ T_{y1}$$

$$T_{y2} = (0.073)\ T_{y1}$$

Since the tiedown cables can carry only tensile loads and given that all cables are oriented symmetrically with respect to the cask (again using dimensions shown in Figures B10-1 and B10-2), the horizontal component of the tension in any cable can be expressed in terms its vertical component:

$$T_x = \frac{2.92}{43.5}\ T_y = (0.067)\ T_y$$

Substituting into the above expression, F can be expressed in terms of T_{y1}:

$$(23.86)\ F = (2.92)\ (0.073)\ T_{y2} - (48)\ (0.067)\ (0.073)\ T_{y1} + (29.08)\ T_{y1} + (48)$$

$$= (32.27)\ T_{y1}$$

$$T_{y1} = (0.739)\ F$$

This cable value represents the sum of the vertical tension component in both aft cables. The horizontal component T_{x1} is not only the sum of both cables but also the component in the plane of the page. Since the vertical plane containing the cables is at a 45° angle to the page, the horizontal component must be increased by a factor of 1.414. Applying these corrections:

$$T_Y = \frac{T_{y1}}{2} = (0.370)\ F$$

$$T_X = (1.414)\ (0.067)\ T_Y = (0.035)\ F$$

The total tensile load in either of the aft cables is then:

$$T_A = \sqrt{(0.37)^2 + (0.035)^2}\ F = (0.372)\ F$$

A similar procedure for the forward cables results in a value of

$$T_F = (0.027)\ F$$

Applying a 0.5*g* load to the center of gravity of the 390 kg (860 lb) load results in the following cable tension values:

$$T_A = (0.372)\ (430) = 160\ lb$$
$$T_F = (0.029)\ (430) = 12\ lb$$

10.2.1.3 Oblique Direction Acceleration. Assume a load is directed at an angle of 45° from the direction of travel. Dimensions for this orientation are shown in Figure B10-4. Force components are similar to those shown in Figure B10-3. Conservatively assume only the tiedown cables at the front and back of the package are effective. Summing moments about A:

$$(23.86)\,F = -(2.81)\,T_{y2} - (48)\,T_{x2} + (34.19)\,T_{y1} + (48)\,T_{x1}$$

Again, assuming the tiedown frame pivots about point B shown above and that the two center cables are not loaded:

$$T_{y2} = (0.0822)\,T_{y1}$$

The cable angle is slightly different for this orientation, resulting in the following ratio of horizontal-to-vertical force in both forward and aft cables:

$$T_X = \frac{4.125}{43.5}\,T_Y = (0.0948)\,T_Y$$

Figure B10-4. Oblique Direction Dimensions.

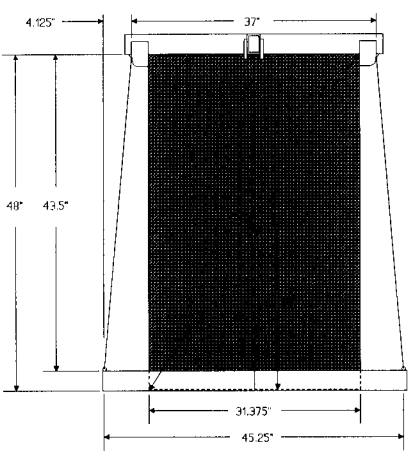

Substituting gives T_{y1} and T_{x1} in terms of F:

$$T_{y1} = \frac{23.86}{38.13} F = (0.626) F$$

$$T_{x1} = (0.0948)(0.626) F = (0.059) F$$

The total tensile load in the aft cable is:

$$T_A = \sqrt{0.626^2 + 0.059^2}\, F = 0.629 F$$

Similarly, the forward cable load is:

$$T_F = \sqrt{0.048^2 + 0.005^2}\, F = 0.048 F$$

Substituting a 0.5*g* load to the center of gravity of the 390-kg (860-lb) load results in the following cable tension values:

$$T_A = (0.629)\ (430) = 270\ lb$$
$$T_F = (0.048)\ (430) = 21\ lb$$

The loads calculated previously are summarized in the following list. They are considerably lower than the lifting loads. Therefore, only components not loaded in lifting will be addressed in the following analyses.

1. Load due to 0.5*g* forward acceleration of the payload: 73 kg (160 lb)
2. Load due to 0.5*g* oblique (45° sideward) acceleration of the payload: 122 kg (270 lb)
3. Load due to 0.5*g* upward acceleration of the payload: 91 kg (201 lb).

10.2.2 Tiedown Frame Eyebolt

The eyebolt in each arm of the tiedown frame is the attachment point for the tiedown strap. Thus, the maximum load calculated for each eyebolt is 122 kg (270 lb). Listed working limit for a Crosby G-277 ½ x 6 shoulder nut eyebolt is 998 kg (2,200 lb). Again, this component easily meets the working strength requirements.

10.2.3 Stops Welded to Tiedown Frame

Eight stops are welded to the tiedown frame as a means of restraining the N-55 when it is placed in position on top of the N-55. The worst-case loading is considered to be the oblique transport loading analyzed previously, which

is reacted by a single set of stops. The previous load determination resulted in a horizontal stress of approximately 9 kg (20 lb). This load produces negligible stress in the stops or the attaching welds.

10.2.4 Tiedown Cables

As shown previously, the maximum load seen by a tiedown cable is 122 kg (270 lb). The working strength of a cable is required to be at least 0.5 times the maximum load calculated. The weakest portion of the cable assembly is the buckle with a working load limit of 907 kg (2,000 lb). Therefore, the tiedown straps easily meet requirements.

10.2.5 Tiedown Base

The tiedown base consists of a rectangular frame constructed of 2.5 x 2.5 x 0.375 angle iron. The frame forms a receptacle for the base of the N-55 and reacts to all loads transmitted through the base of the N-55. In addition, lengths of ¾ rod are welded to the four corners of the frame to form attachment points for the tiedown cables. The tiedown base is bolted to the transport vehicle bed and frame.

10.2.6 Frame Tiedown Attachments

The rod is formed into a U shape with the ends welded to the outside of the frame angles as shown in Figure B10-5. The welds are ⅛ in. by 2.5 in. and are placed on both sides of the rod. The radius of curvature of the centerline of the rod is approximately 1.3 in.

The tiedown attachment can be considered as one-half of a chain link with a central stud joining the two sides of the link as was done with the lifting bail above. The maximum bending moment occurs at the point of loading.

$$M_0 = \frac{WRC_1}{2}$$

Where C_1 is a function of the ratio L/R

$$C_1 = \frac{(k+2)\,[k^3+6k^2+12k(4-\pi)+48(\pi-3)]}{k^4+4\pi k^3+48k^2+24\pi k+24(\pi^2-8)}$$

and k = L/R.

The value of L is approximately 2.5 in. with R = 1.3 in. given above. Substituting k = 2.5/1.3 = 1.923 gives C_1 = 0.466, and thus the maximum moment becomes

$$M_0 = \frac{270(1.3)(0.466)}{2} = 82\,in\text{-}lb$$

Similarly, a tensile load, H, is produced at the point of loading

$$H = \frac{WC_2}{2}$$

Where C_2 is given by

$$C_2 = \frac{12(k+2)[(\pi-2)k+2(4-\pi)]}{k^4+4\pi k^3+48k^2+24\pi k+24(\pi^2-8)}$$

Substituting gives C_2 = 0.392 and the tensile load becomes

$$H = \frac{270(0.392)}{2} = 53\,lb$$

At the point of loading, on the outer surface the maximum tensile stress is due to both the tensile loading, H, and the moment, M_0. The stress due to H is

$$S_t = \frac{H}{A} = \frac{53}{0.11} = 482\,psi$$

The bending stress can be calculated for a curved beam using Roark (Roark and Young 1975) Table 16, Case 2 with R/c = 6.93. The correction factor for the inner surface is by interpolation, k_i = 1.12.

The section modulus of the tiedown attachment is:

$$S_x = \frac{\pi d^3}{32} = 0.0052\,in^3$$

The bending stress on the inner surface of tiedown attachment (compressive):

$$f_b = k_i \frac{M_b}{S} = 1.12 \frac{82}{0.0052} = 17{,}662\,psi$$

The sum of the tensile stress and the compressive bending stress is:

$$S_T = S_t + S_b = 482 + -17{,}662 = -17{,}180\,psi$$

From above the maximum stress in the tiedown attachment occurs at the point of loading. The safety margin is:

$$SM = \frac{(58,000/5)}{17,180} = 0.675$$

Assume the tensile load is equal to the maximum cable load calculated previously and that the entire load is reacted by one leg of the attachment.

$$f = T/A = 270/(0.25\pi 0.375^2) = 2,444\ lb$$

$$SM = \frac{11,600}{2,444} = 4.75$$

The shear stress in the attachment weld is conservatively assumed to result from the entire load being carried by one leg of the attachment.

$$A_w = 2(2.5) = 5.0\ in.$$

$$f_w = \frac{T}{A_w} = \frac{270}{5.0} = 54.0\ lb/in$$

The allowable weld load for a ⅛-in. weld is:

$$\tau_w = (0.6)(0.125)(.707)(58,000/5) = 615\ lb/in$$

$$SM = \frac{615}{54.0} = 11.40$$

10.2.7 Tiedown Base Frame

The frame carries the loads from the N-55 to the bed and frame of the transport vehicle. The bearing load from the base of the cask is carried from the center of the beam to the frame bolts. The frame can be considered chocking as defined in 49 CFR 393.104. Therefore, it must resist a deceleration of 20 ft/s^2 (0.6g). Using a payload weight (including the tiedown frame) of 860 lb the horizontal load, F, becomes:

$$F_A = (0.62)\ (860) = 533\ lb$$

Consider the frame carrying the load to be a simple beam 25.5 in. in length. The section modulus, S_y of a 2.5 x 2.5 x 0.375 angle, is 0.566 in^3.

$$M = \frac{F_A l}{4} = \frac{533\,(25.5)}{4} = 3,399\ in\text{-}lb$$

$$f_b = \frac{M}{S_y} = \frac{3,399}{0.566} = 6,005\ psi$$

$$SM = \frac{11,600}{6,005} = 1.93$$

Figure B10-5. Tiedown Base Frame.

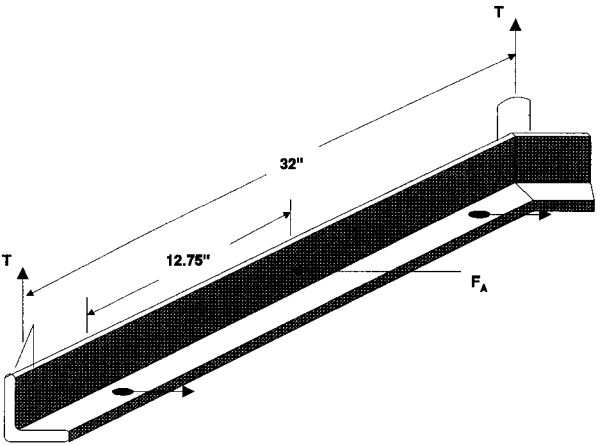

10.2.8 Bolts

The frame carrying the N-55 is attached to the truck bed with 4½-13UNC bolts of A-307 material (F_u = 60,000 psi). Assume two of the bolts react the moment of payload experiencing a 0.62*g* deceleration. The moment arm from the pivot point of the N-55 to the bolts is assumed to be 32 in.

From the loads analysis above, the moment due to a 0.5*g* acceleration is:

$$M_A = (860)(23.86) = 20,520\ in\text{-}lb$$

The force per bolt is then:

$$T_b = \frac{M_A}{2\,l} = \frac{20,520}{2\,(32)} = 321\ lb$$

Tensile area of the bolt is 0.142 in^2. Bolt stress is then:

$$f_b = T_b / A = 321 / 0.142 = 2,258\ psi$$

$$SM = \frac{60,000/5}{2,258} = 5.31$$

Due to the large margin for the bolts, the additional analyses involving the bolts are not considered necessary.

10.3 ATTACHMENTS AND RATINGS

The following attachments and ratings were used to evaluate the tiedown system:

Attachment	Rating
Frame eyebolt	1,000 kg (2,200 lb)
Tiedown cables	907 kg (2,000 lb)
Tiedown base	1/3 S_y
Tiedown bolts	1/5 S_u

10.4 REFERENCES

Roark, R. J., and W. C. Young, 1975, *Formulas for Stress and Strain*, Fifth Edition, McGraw Hill Book Company, New York, New York.

Blake, Alexander, 1960, *Practical Stress Analysis in Engineering Design*, Second Edition, Marcel Dekker, Inc., New York, New York.

This page intentionally left blank.

DISTRIBUTION SHEET

To	From	Page 1 of 1
Distribution	Packaging Engineering	Date 02/26/97
Project Title/Work Order		EDT No. 619550
Safety Analysis Report for Packaging (Onsite) Doorstop Sample Carrier System (HNF-SD-TP-SARP-023)		ECN No. NA

Name	MSIN	Text With All Attach.	Text Only	Attach./ Appendix Only	EDT/ECN Only
P. K. Bhatia	R2-54	X			
S. L. Brey	T6-12	X			
D. D. Carlson	T6-51	X			
D. W. Claussen	S7-55	X			
R. L. Clawson	H1-14	X			
D. M. Edmonson	T6-09	X			
J. G. Field	H1-15	X			
M. A. Green	X3-56	X			
L. M. Hay	H1-15	X			
C. R. Hoover	H1-15	X			
P. Jennings	R2-84	X			
J. W. Lawson	X7-02	X			
M. L. Martin	T6-20	X			
M. L. McElroy	S7-07	X			
F. J. Reitz	S7-12	X			
S. M. Stahl	R2-54	X			
Central Files	A3-88	X			
NS Information Center (DOE-HQ-5)					