LA-UR 96-1

Conceptual Design Report

NUCLEAR MATERIALS STORAGE FACILITY RENOVATION

Part VI - Alternatives Study

RECEIVED
FEB 21 1996
OSTI

Los Alamos
National Laboratory
July 14, 1995

JULY 14, 1995

LA-UR96-1

CONCEPTUAL DESIGN REPORT
FOR
LINE ITEM PROJECT
NUCLEAR MATERIALS STORAGE FACILITY RENOVATION
AT THE
LOS ALAMOS NATIONAL LABORATORY

Project Identification Number 11818
Technical Area 55
Building PF-41

Prepared by
ICF KAISER ENGINEERS, INC.
1900 Diamond Drive
Los Alamos, NM 87544
and
University of California
Los Alamos National Laboratory
Facilities, Security and Safeguards Division
Los Alamos, New Mexico 87545

Larry Kirkman
DOE/LAAO Area Manager

T. J. Trapp
Nuclear Materials Program Manager

Juan Griego
DOE Project Manager

David Post
NMT-8 Group Leader/TA-55 Facility Manager

Leroy Martinez
NMSF Project Leader

Carolyn Zerkle
FSS-6/NMBT Project Team Leader

David K. O'Flynn
Project Manager - ICF Kaiser
& Classification Reviewer

MASTER

DISTRIBUTION OF THIS DOCUMENT IS UNLIMITED

DISCLAIMER

TABLE OF CONTENTS

ALTERNATIVES STUDY

FOR THE

NUCLEAR MATERIALS STORAGE FACILITY RENOVATION

AT THE
LOS ALAMOS NATIONAL LABORATORY
P.I. 11818

Prepared by
ICF Kaiser Engineers, Inc.
and
University of California
Los Alamos National Laboratory
Facilities, Security, and Safeguards Division
Los Alamos, New Mexico

July 11, 1995

TABLE OF CONTENTS

TABLE OF CONTENTS (continued)

APPENDIXES

TABLE OF CONTENTS (continued)

I. INTRODUCTION

The purpose of this report is to discuss alternatives considered during preparation of the Conceptual Design Report (CDR). The CDR proposes a renovation of the existing facility. The renovation will allow upgrades to the Nuclear Materials Storage Facility (NMSF) at PF-41, Technical Area (TA)-55 at the Los Alamos National Laboratory (LANL), so that the facility complies with the current Department of Energy (DOE) and LANL health, safety, and operational requirements. The project will provide centralized, intermediate and long-term storage of Special Nuclear Material (SNM) to support the LANL mission. However, before a renovation was proposed as the most practical alternative, other options were evaluated, including no action, construction of a new facility, and the use of other facilities.

A detailed CDR was prepared in early 1994 which suggested a renovation plan centered around a solid block storage concept. Subsequent reviews, investigations, meetings, and other documents have been prepared which suggest other storage concepts would work also. LANL and DOE decided to prepare a final CDR which more clearly defines the storage and renovation alternatives and meets user needs based on the most recent information and direction available. As part of that effort, this report summarizes the viable plans investigated thus far, so a rationale for selecting a particular storage concept can be justified.

The basic problems with NMSF in its current configuration which prevent its operation and use as a storage facility for Special Nuclear Materials (SNM) are:

1. the storage vault and related equipment are not functional and do not meet operational and radiological requirements;
2. heat generated by decaying SNM cannot be rejected by the facility, thus exceeding material certification standards;
3. the operational and administrative areas (change rooms, mechanical rooms, etc.) do not meet current DOE Orders.

The investigation of each alternative considered these criteria. The design of any new or renovated storage facility is driven by the storage configuration selected.

This report considers the following alternatives:

1. No action - do nothing, maintain status quo with no changes to current capabilities and operations.

2. Build a new facility at TA-55

3. Build a new facility outside TA-55.

4. Use the existing vault at TA-41

5. Use the Day Vault at Building PF-4 at TA-55

6. Renovate the existing facility (PF-41 at TA-55) with any one of the following options:

    A. Shelf Storage with a Stacker-Retriever Warehouse System

        1. Active Cooling
        2. Passive Cooling

    B. Pool / Water Storage

    C. Solid Block Storage

        1. Cast Iron Blocks
        2. Cast Iron Tubes
        3. Concrete

    D. Passive Air Cooling

        1. HEPA filtered Charge Hall
        2. HEPA filtered Container Handling Machine/Non-HEPA filtered Charge Hall
        3. Non-HEPA filtered Charge Hall - use tertiary capsules

    E. Active Air Cooling

        1. HEPA filtered cooling air
        2. Non-HEPA filtered cooling air

Each storage option is explained and evaluated in terms of 7 basic criteria. These are:

1. Design Concept (how does it work)
2. Facility Modifications (what changes will have to be made to the building)
3. Process and Materials Flow (how is material inserted and retrieved from the storage vault)
4. Special Facilities Equipment (what special items are required)
5. DOE 6430.1A (5 areas: confinement, criticality, contamination control, MC&A, Emergency Power/Critical Systems)
6. Advantages and Disadvantages
7. Cost Estimate

These criteria represent general items that ease comparisons between systems and enable evaluations to be made on consistent basis.

II. PROJECT CONSTRAINTS AND CRITERIA

The following constraints apply to the study and the storage options were evaluated against these items:

1. A utility building will need to be added to support the gas boilers and emergency generators in order to comply with DOE 6430.1A;

2. The heat removal capacity of the storage array shall not exceed 20kW;

3. The concept shall allow for a nominal number of 6,000 storage locations

4. The concept shall allow for a nominal mass of 6,600 kg of actinides;

5. The cooling system used shall provide for Passive Safe Shutdown;

6. The storage array shall be designed and configured in a way that ensures subcritical geometry is maintained. A spacing of 2 feet on center between 18-inch-diameter drywells must be maintained (Detailed criticality analyses are contained in the revised CDR);

7. The design must comply with the requirements of DOE Order 6430.1A, General Design Criteria;

8. The container dimensions identified in the **Functional and Operational Requirements Document** (October, 1994) will remain fixed;

9. Material will arrive at the facility already packaged in approved containers;

10. Criticality and shielding requirements are contained in Part I of the CDR (Section E1.15), but are not assumed to pose a problem because the material will be kept in a subcritical geometry by positive sizing features inherent in the packaging of material and design of the facility;

11. Complex 21 containers are not available.

III. ALTERNATIVES

A. NO ACTION

1. DESCRIPTION

This option maintains the status quo, and requires no new capital funding. No new facilities would be built to accommodate intermediate nor would long term storage of SNM, or a centralized location provided at LANL specifically for SNM. SNM would continue to be stored at PF-4. That facility was not specifically designed for the intended mission of NMSF.

2. ADVANTAGES AND DISADVANTAGES

The advantage of this alternative is it requires no capital funding.

The disadvantage is that LANL will not be able to fulfill its programmatic mission.

B. BUILD A NEW FACILITY AT TA 55

1. DESIGN CONCEPT

Under this alternative, an entirely new facility would be built at TA 55, to either the east or west of PF-41. The new facility will provide approximately 6000 storage locations. This facility will utilize a passive cooling system, similar to that described in Section F. 4. Passive Air Cooling. The facility will have an area of approximately 32,000 square feet.

The facility will provide the following features:

a. A truck loading and unloading area.

b. A support area with change rooms, security station, and staging area.

c. An NDA laboratory, pack/unpack area, and connection to the PF-4 tunnel. These areas will be below grade.

d. A storage array and charge hall. A passive air cooling system will be used. The array portion of the structure will be below grade.

A conceptual drawing is contained in Appendix No. 1.

SNM would arrive in product/boundary containers, and would then be placed in drywells. The array would be constructed in modules, thereby allowing expansion should circumstances warrant.

2. PROCESS AND MATERIALS FLOW

This section briefly describe the process flow through the facility. The purpose of the description here is to explain the steps required to insert and retrieve containers from the array. A synopsis of the material/process flow follows:

A. Containers arrive by Safe Secure Transports (SST's) which park in the garage.

B. The trucks are unloaded and the shipping containers are moved into the airlock.

C. From the airlock, the shipping containers enter the MAA. Containers are staged on the first floor and transported to the Pack/Unpack Area in the lower level.

D. Once in the Pack/Unpack Area, the product/boundary containers are removed from the shipping containers, placed in jigs or other apparatus to provide criticality spacing, and then transferred to the NDA lab. As shipping containers are emptied and material containers are moved through the NDA lab, more shipping containers are retrieved from staging.

E. The empty shipping containers are tested for contamination, and if they are clean, can then be moved to the outside of the building, through the airlock and garage, for transport off site.

F. In the NDA Lab the items are assayed. From there, the containers are placed in the array.

G. The container handling machine, with shielding cask, then is used to insert the container into the array.

Material will arrive from PF-4 and enter the NMSF through an existing tunnel in the basement. To assay or remove material from the storage array, the opposite of the above process will be used.

3. SPECIAL FACILITIES EQUIPMENT

Similar equipment to that described in Section F.4.D, will be required to make the dry storage concept functional.

4. DOE 6430.1A ANALYSIS

The same analysis that is listed in Section F.4.E is applicable to this concept.

5. ADVANTAGES AND DISADVANTAGES

The advantages of building a new facility are:

- It can be specifically designed to accommodate a passive air cooled, dry storage concept.
- All functions can be provided with enough space.
- Functions and equipment within the MAA can be minimized.
- Expansion capabilities can be designed in, since the array will be constructed in a modular configuration.
- The NMSF can be converted into another type of facility, more cost effectively, and the resulting renovations minimized.

The disadvantages are:

- A new facility is costlier to construct than renovating the NMSF, and may take more time before it is available for use. The increase in schedule could affect operations at PF-4.
- The existing NMSF will remain unused and non-functional.
- A significant amount of new site security construction will be required, thus consuming more resources and increasing logistics difficulties.

6. COST ESTIMATE

A new facility is estimated to cost approximately $25,000,000. This cost does not include the cost of design, project management, or include contingency. Appendix No.2 contains more detailed estimate data.

C. BUILD A NEW FACILITY OUTSIDE TA 55

1. DESCRIPTION

In this alternative, a new facility, employing a passive cooling, dry storage concept will be constructed at an undetermined location outside TA-55. The facility features, operations, and other characteristics would be similar to that described for construction of a new facility at TA-55, above.

2. ADVANTAGES AND DISADVANTAGES

The advantages are the same as listed for construction of a new facility at TA-55. However, the additional disadvantages include:

- On site transport would be required. Additional road closures, increased transfer costs, and increased worker and public risk will result as a consequence of not locating the facility within TA-55.
- A new secure site will have to be established, thus increasing costs.
- Operations at other facilities could be adversely affected with such a sensitive facility located in close proximity.
- Centralized plutonium storage facilities would not be available at TA-55, thus complicating operations at PF-4.

3. COST ESTIMATE

The estimated cost for a new facility outside TA-55 is approximately $30,000,000. However, costs for site security were unknown, since they are site dependent, but a cost of $5,000,000 was estimated and added to the estimate of $30,000,000 for a new facility within TA-55.

D. USE THE EXISTING VAULT AT TA-41

This alternative was not investigated in depth, and the evaluation of its feasibility relies on the previous analysis performed by Merrick and Company in the initial CDR, as well as discussions with NMT-8 and NMT-4 personnel.

The TA-41 vault is an aging facility, located in a canyon, and sits atop a water table with significant environmental and groundwater contamination. It is inaccessible to SST vehicles, and is very close to the Los Alamos townsite businesses and housing. Extensive road closures would be required, thus increasing costs and inconvenience. Extensive renovations and upgrades would be required. The facility could not be commissioned before PF-41 could be renovated.

E. USE THE DAY VAULT AT BUILDING PF-4, TA-55

This alternative was not investigated in depth, and the evaluation of its feasibility relies on the previous analysis performed by Merrick and Company in the initial CDR, as well as discussions with NMT-8 and NMT-4 personnel.

PF-4 is an aging facility, and requires extensive maintenance to remain operational. Due to the variety of operations and lack of available space in the facility, it would be extremely difficult to add another function without relocating existing processes and without building new facilities to accommodate the dislocated processes. The PF-4 *vault* currently supports stockpile evaluation; Weapons Research; Development; and Testing Program; special recovery; advanced fuels and heat sources; and existing inventory. Use of this vault for additional storage functions would significantly increase exposure to workers.

Extensive renovations would be required, and future renovations of PF-4 could be adversely affected in terms of cost and difficulty because of the increased use of PF-4.

F. RENOVATE THE EXISTING FACILITY (PF-41, NMSF)

Five renovation options of the existing facility were considered and analyzed. Under each renovation option, the building shell would be utilized and minimal modifications made to the exterior. Various heat rejection schemes were also considered, with the objective of a passive safe shutdown capability.

1. STORAGE OPTION NO. 1: SHELF STORAGE WITH STACKER-RETRIEVER WAREHOUSE SYSTEM

In this option, the existing storage system would be upgraded and modified to meet the storage and functional requirements, or a new system would be installed.

Currently the facility houses a shelf storage with a stacker-retriever warehouse system in the basement. The facility has never housed any Special Nuclear Materials (SNM), so the system has never been operated to store SNM. Thus, no actual operational data is available to validate the disadvantages, advantages, and other characteristics of the system in NMSF. However, the existing system has problems that prevent it from functioning properly. Those basic problems include poor heat dissipation, physical incompatibility of containers and shelves, and operational problems of the stacker-retriever. Merrick and Company performed a study of this storage option, including variations of the cooling scheme (active and passive), which is included as Appendix No. 3 of this report.

The highlights of this option are discussed briefly here.

A. DESIGN CONCEPT

As mentioned above, this system is similar to that which is currently installed in NMSF. Storage shelving and equipment would be located in the existing vault with shelving units covering both long walls. A stacker-retriever unit would be located in each aisle and be able to pull the maximum number of storage items from a drawer at a single pull. Cooling would be provided using one of two methods: Active Shelf Cooling and Passive Shelf Cooling.

The Active Shelf Cooling method utilizes cooling coils located in the shelves, and would require chilled water supply and return lines, as well as required pumps, condensers, valves, piping, and other equipment. In the Passive Cooling method, the bottom of each shelf would be connected to the evaporator end of a heat pipe. The heat pipes would pass through the wall of the facility into a concrete block buried outside, which would then dissipate the heat to the soil.

B. FACILITY MODIFICATIONS

The existing shelving and stacker-retriever system would be removed and replaced as described in the original study. However, the existing shelving and equipment could be modified to accommodate the required shielding, but the storage capacity would be reduced because existing shelving structure and equipment is not structurally capable of supporting the required shielding and cooling apparatus.

As mentioned in Appendix No. 3, chillers would need to be installed in the mechanical room (within the MAA) and standby generators would also be required so that passive shutdown durations could be minimized, with the active cooling system. The original study asserted that the active cooling system would have enough latent capacity to provide considerable cooling capability for a finite period should a loss of power or mechanical breakdown occur. Passive cooling would require the installation of heat pipes and large concrete blocks outside the building. Two methods were considered in the report.

Other facility modifications would take place as described in the original CDR, or could be modified somewhat. The focus of the study, however, was to evaluate the storage concept only. Different arrangements to optimize functionality should vary that much to significantly affect cost or operations (for the purposes of this study). Appendix No. 4 contains the floor plans proposed in the original CDR (Drawing No. A6)

C. PROCESS AND MATERIALS FLOW

The process and material flow would be very similar to that which is shown in the original CDR. A schematic of the process flow is shown in Appendix No.4 (Drawing P1).

D. SPECIAL FACILITIES EQUIPMENT

The Special Facilities Equipment related to the storage system would include the following:

a. Shelving System: The replacement shelving system would consist of racks and frames that would support fixed shelving. The shelving would be fitted with heat exchangers and essentially be a small water tank. It would also serve as shielding. Trays holding the material containers would sit on the shelves and be accessed by the Stacker-Retriever.

b. Mechanical Equipment: If the active system is selected, two 30 ton chillers would need to be installed in the Mechanical Room. Plumbing fixture, equipment, and piping would need to be installed also.

E. DOE 6430.1A ANALYSIS

This section briefly describes how the storage configuration and facility could comply with the intent of DOE Order 6430.1A. The structure surrounding the storage area will be designed and/or reinforced to resist natural phenomena hazards, therefore reducing the threats to the containers and storage racks, as well as prevent significant breaches in the structure. Similarly, the structural and mechanical systems will be designed to eliminate releases in a design based accident using a combination of mechanical ventilation systems and a hardened structure. The building and related systems will provide physical protection and confinement to the material containers should they become breached.

The storage containers available to the project have changed in the interim between the original CDR and the most current. The complex 21 container project has been scaled back and will not be available to NMSF.

Three container systems will be stored; the plutonium oxides and metals containers (cylindrical stainless steel product and boundary assemblies), the inner vessel of the AT400A (for weapons components), and the Y-12 containers (for uranium). Sketches of these containers are included in Appendix No. 6. The Y-12 will be stored in the oxides and metals container. The use of these storage containers, the storage system, and building design affect the following design issues:

1) <u>Containment of Potential Release:</u> The storage vault area will have to be HEPA filtered to prevent releases, should the container system be

breached. The use of HEPA filters in the operational area will be designed to preclude contamination of the environment should a product/boundary assembly be breached. The facility will be configured and monitors/alarms provided to eliminate the likelihood of contamination from migrating to outside the immediately affected area. Potential contamination should be controlled as close as possible to handling areas with fume hoods, or similar apparatus, with sufficient capture velocity, to minimize migration. Administrative controls will also be utilized.

2) Criticality/Storage Container Spacing: The design of this system must comply with current container packaging units for all materials proposed for storage. The design of the storage shelving in the vault will be uniform throughout all storage locations. The variation in storage package envelope, and associated container-to-container stack height, will be accommodated by the use of storage shelves and trays. The shelves should contain some mechanism to secure the containers within the tray. The design of the product container fixtures should implement a positive sizing feature to prevent inadvertent spacing of product containers.

3) Control of Contamination: The HEPA filters prevent the spread of potential contamination from the stored product/boundary containers. In the rare event that product/boundary container is breached or contaminated within the operations area, the confinement ventilation system is designed to eliminate migration. Also, radiation monitors, SNM detectors, and personnel will be assigned to ensure that contamination is not tracked into the change rooms or out of the MAA. Administrative controls to assure container cleanliness and integrity are required to verify external/internal surface cleanliness.

4) Material Accountability: The shelving system and stacker-retriever should be designed to provide a substantial barrier to unauthorized removal of stored materials. The combination of large physical size, unique access to the vault area present a defense-in-depth approach to storage security; providing an extended period of time for detection. Electronic tamper indicating devices will be required to record entry to each drawer.

5) Emergency Power/Critical Systems: Emergency power, via an uninterruptible power supple (UPS), will be required to run critical systems

(monitors, security, etc.). If the active shelf cooling method is used, and depending on the capacity of the heat sink and the need to restart the cooling system, Standby generators may be needed to provide cooling. If the cooling system needs air flow in the vault to remove heat, generators will be required to operate the confinement ventilation system.

F. ADVANTAGES AND DISADVANTAGES

The advantage of this system is that it incorporates relatively conventional technology and can be installed without significant structural modifications to the vault area. Also, the existing stacker-retriever could be modified and used.

The primary disadvantages are:

- Based on information received from LANL, the soil surrounding the facility does not contain enough moisture to reject heat and acts more like an insulator. This would make the heat pipe cooling method impractical.
- The stacker-retrievers are prone to breakdowns, based on LANL's current experience.
- The active cooling system would require extensive plumbing and HVAC equipment, as well as backup generators to supply power during an accident. This could become a maintenance and operational problem in the future. Indefinite, long term, passive safe shutdown, does not appear possible from the information presented in Appendix No. 3.
- Shielding will be a problem in the aisle between the stacker-retriever and the storage tray. This could affect the electronics in the storage vault.
- The facility is currently equipped with this type of system and it does not function.
- Due to the configuration of the storage array, and the fact that many storage locations are relatively easy to access at one time in comparison to other storage systems, extended MC&A inventories may be more difficult to achieve.

G. COST ESTIMATE

Based on the information presented in Appendix No. 3, the cost estimates for storage equipment and related Special Facilities Equipment, excluding building modifications and contingency, for the two stacker-retriever options are as follows:

Active Shelf Cooling:	$ 2,938,000
Heat Pipe No. 1:	$ 2,945,000
Heat Pipe No. 2:	$ 4,039,000

Building modifications were not considered in the preceding costs. However, based on the original CDR, the building costs for the solid block option were approximately $6,865,088 (not including contingency). In order to compare different storage alternatives, one can assume the building modifications would cost about the same amount as for the solid block. The approximate bare costs for the options would then be:

Active Shelf Cooling:	$ 9,803,088
Heat Pipe No. 1:	$ 9,810,088
Heat Pipe No. 2:	$ 10,904,088

The original CDR contains a detailed building modification estimate. A summary of those costs is included in Appendix No. 5. The cost estimate for this option assumed that the stacker-retriever could pick-up either the AT400A inner vessels or the oxides and metals containers without additional container handling jigs.

2. STORAGE OPTION NO. 2: POOL STORAGE WITH ACTIVE COOLING

A. DESIGN CONCEPT

As described in Appendix No. 3, this storage method proposes to store containers placed inside vertical tubes which would be immersed in a water bath. Automated cranes or robots would insert and extract containers. Circulating chilled water or heat pipes would provide cooling. Passive safe shutdown of a few weeks is possible.

The water bath would be constructed in the basement and a deck, with holes, would cover the water. The deck would provide access to the top of the array and also provide shielding.

B. FACILITY MODIFICATIONS

The existing stacker-retriever in the basement would be removed and the lower portions of the two vault rooms would be converted to water tanks, approximately 10 ft. deep. A stainless steel, welded liner would be installed on the existing floor and walls. Inner tanks (welded, stainless steel), fabricated and installed in sections, as well as required floor and wall supports (creating a cavity between the liner and tank for leak detection) would then be installed. A punch plate, stainless steel deck would be installed on the top of the tanks. Stainless steel drywells would then be placed at 18 inch centers and supported from the deck.

C. PROCESS AND MATERIALS FLOW

The process and material flow would be very similar to that which is shown in the CDR. See the schematic in Appendix No. 4. The storage vaults will be located in the same place and similar material handling equipment will be used.

D. SPECIAL FACILITIES EQUIPMENT

The Special Facilities Equipment related to the storage system would include the following:

a. Water Tank, liner, and decking: These items will be stainless steel to minimize corrosion and will be specially fabricated, installed, and inspected.

b. Mechanical Equipment: For the active cooling system, chillers would need to be installed in the Mechanical Room. Plumbing fixture, equipment, and piping would also be required.

c. Heat Pipes: If the passive system were chosen, heat pipes and concrete blocks would have to be installed exterior to the facility.

d. Drywells: These will be stainless steel (welded seam) and will be attached to the deck. They will hold up to 5 containers.

e. Storage Baskets: These will be inserted in the drywells to enable extraction of all 5 containers at one time. They could be constructed of carbon steel and should not be exposed to corrosive atmospheres since they will be encapsulated inside the drywell. Because the complex 21 container (which had an integral lifting device) is no longer available, and the current containers (AT400A inner vessel and metals and oxides container) do not have any lifting means, an additional retrieval device must be provided. A sketch of the baskets is included in Appendix No. 6.

f. Gantry Robot: This is an automated system that will access the containers in the drywells. It will travel on rails mounted on the walls, above the tank deck.

g. Shield Plugs/Drywell Covers: These will protect personnel on top of the deck from radiation, limit access to drywell contents, and be airtight.

E. DOE 6430.1A ANALYSIS

This section briefly describes how the storage configuration and facility could comply with the intent of DOE Order 6430.1A.

The building and related systems will provide physical protection and confinement to the product/boundary containers. The drywells will provide limited physical protection to the product/boundary containers also and prevent them from being displaced during an accident. The tank and liner will provide physical protection and confinement both to the water and product/boundary containers in the event of an accident. Product/boundary containers will provide 2 layers of physical protection and confinement. The water bath will provide shielding and cooling.

The product/boundary containers selected for this project will be a system that provides at least 2 layers of confinement and limited physical protection. There will be three container systems to be stored and include the plutonium metals and oxides containers (cylindrical stainless steel product and boundary assemblies), the AT400A inner vessel (for weapons components), and the Y-12 containers (for uranium). The Y-12 fits inside the metals and oxides container. The use of the water bath with a gantry robot impacts the following design issues:

1) Containment of Potential Release: The storage vault area will be HEPA filtered to prevent releases, should the container system be breached. The liner and tank will have a leak detection system also. The drywells will also act as a confinement and have a leak detection system for trace gases from the material containers.

2) Criticality/Storage Container Spacing: The design of this system must comply with current container packaging units for all materials proposed for storage. The design of the water bath storage system in the vault will be uniform throughout all storage locations. The variation in storage package envelope, and associated container-to-container stack height, will be accommodated by the use of a storage baskets, tube spacing, and the shielding provided by the water bath. The design of the product container fixtures (baskets) should implement a positive sizing feature to prevent inadvertent spacing of product containers. Administrative controls will have to be implemented to ensure water chemistry and levels, as well as maintenance requirements.

3) Control of Contamination: The HEPA filters, liner, tanks, and drywells prevent the spread of potential contamination from the stored product containers. In the rare event that product/boundary container is breached or contaminated within the operations area, the confinement ventilation system is designed to eliminate migration. Also, radiation monitors, SNM detectors, and personnel will be assigned to ensure that contamination is not tracked into the change rooms or out of the MAA. Administrative controls to assure container cleanliness and integrity are required to verify external/internal surface cleanliness.

4) Material Accountability: The drywells, shield plugs, and automated container

retrieval system should be designed to provide a substantial barrier to unauthorized removal of stored materials. The combination of large physical size and unique access to the vault area present a defense-in-depth approach to storage security; providing an extended period of time for detection. Electronic tamper indicating devices will be required to record entry to each drywell.

5) Emergency Power/Critical Systems: Due to the need to maintain cooling in the water bath emergency, standby power may be required, should the active cooling approach be selected.

F. ADVANTAGES AND DISADVANTAGES

The primary advantages of this system are the following:

- Excellent shielding
- Excellent heat management and dissipation with the active cooling apparatus

The primary disadvantages have to do with the following:

- Complicated fabrication and inspection of the water tank
- Requirement for administrative criticality controls during drainage or maintenance on one of the water tanks.
- Uncertainty of a tank leak
- High maintenance and operational costs, as well as complicated reporting and administrative requirements to maintain water chemistry, recirculating pumps, and other active cooling equipment for the active cooling method.
- Uncertainty with respect to operation and maintenance of gantry robot.
- Inability of the soil surrounding the facility to reject heat should the heat pipe method be employed. The soil does not contain enough moisture to dissipate heat and acts more like an insulator than a conductor.

G. COST ESTIMATE

Based on the information presented in Merrick's report, the cost estimate for the active cooled water bath storage is $3,842,000. However, because the complex 21 container (which had an integral lifting device) is no longer available, and the current containers (AT400A inner vessels and oxides and metals container) do not have any lifting means, an additional retrieval device to lift the containers in and out of the storage sleeves must be provided.

These baskets were priced at approximately $1,000 each, and no less than 600 units are required. This yields an additional cost of $600,000, without contingency. The total estimated cost of storage equipment and SFE is then $4,442,000. Also, assuming similar building modification costs of $6,865,088 (per the original CDR, excluding contingency), the total building, storage array, and SFE costs are approximately $11,307,088. Refer to Appendix No. 5 for building cost data and Appendix No.12 for cost data on the storage baskets.

3. STORAGE OPTION NO. 3: SOLID BLOCK STORAGE WITH ACTIVE COOLING

A. DESIGN CONCEPT

The solid block storage concept was introduced in the original CDR, where cast iron blocks with machined holes were proposed. During the Value Engineering Study (conducted in February 1994) an alternative of cast-in-place concrete was examined. In either case, the containers would be stored inside drywells, or holes, cast into the array, in a 10 high configuration, each with active cooling via chilled water. The containers could be placed in the array separately, or in baskets. The array would be constructed in the existing basement, with minimal structural modifications. The existing drawers currently occupy the space. The storage vault would be HEPA filtered.

The staging, pack/unpack, and NDA lab areas would all be housed on the first floor, as shown on the original CDR floor plans. The MAA on the first floor would still contain the change room, mechanical room, and administrative areas. Operations would occur similarly to that proposed in the CDR, although the facility layout and certain mechanical and electrical systems will have to be changed to meet DOE 6430.1A and LANL requirements.

B. FACILITY MODIFICATIONS

Most of the facility modification would be made in accordance with the original CDR, which provides substantial detail, but with minor changes. See Appendix No. 4 for floor plans and schematics. Some of the changes include:

- Enlarge the security station, per direction from LANL's FSS-16 (Security). As shown on the CDR, the security station is too small. Create more space by placing clean barrel storage outside the building (for example the garage) and enlarge the MAA to accommodate a larger security station, change rooms, etc.
- Rearrange the change rooms and monitoring station to meet the requirements of the **Functional and Operational Requirements Document** (October 1994).
- Reduce the risk of co-mingling (persons in Anti-C's in contact with those in street clothing) by rearranging the change rooms, material transfer station,

airlock near the garage, and the monitoring station. This would entail segregating/designating radiologically controlled and uncontrolled areas.

- Eliminating the vestibule between the garage and the airlock. Per recent directions from FSS-10 (security), the garage can function as a vestibule, if properly alarmed and controlled.

- Due to the low probability of a release of plutonium, the number of stages of HEPA filters on the exhaust side could be reduced from 3 to 2. This is supported by the **Preliminary Hazards Analysis (PHA)**, dated April 1994.

- Install seats or some other positive means of connecting the existing pre-cast double-T roof spandrels to the walls to prevent collapse during an earthquake, or other event where the structure will be subject to lateral loading that could cause displacement of the walls and a loss of bearing of the spandrels on the walls. The T-beams were investigated during preparation of the new CDR and were found to be adequate. Refer to the CDR for documentation of this.

- If the cast-iron block concept were used, a different detail other than the dovetail slot with which to connect the blocks together should be designed. The dovetail slot could make it difficult to install the blocks.

- An alternate arrangement for the cooling tubes should be investigated. In the current configuration as shown in the CDR, the possibility of a leak or malfunction with one of the tubes or valves could cause a problem. Cooling tubes could be embedded in the concrete slab (at the bottom of the cast iron blocks and air forced over the top of the blocks to dissipate the heat.

- If the cast-iron blocks were to be used, they could be shimmed temporarily and a self levelling grout pumped underneath the blocks to provide a level surface more suitable than the existing concrete floor.

- As an alternate to cast iron blocks, a cast in place concrete (with steel shot to increase density for heat transfer and shielding purposes) storage array could be constructed, with drywells cast into the array. Cooling tubes would be cast into the concrete. Cooling apparatus and operation could also take place as described above.

The intent of these changes would be to meet the most current directives regarding radiological contamination control, security requirements, and also to provide more floor space. Additional floor space will be required for the Mechanical Room, NDA Lab, and Pack/Unpack, and Staging Areas.

These changes would also make the solid block concept easier to install and maintain.

C. PROCESS AND MATERIALS FLOW

Operations would proceed as detailed in the original CDR. See Appendix No. 4.

D. SPECIAL FACILITIES EQUIPMENT

The Special Facilities Equipment would be as specified in the original CDR, but if the cast in place concrete option were selected, the following would be required:

- Drywells (either carbon steel or stainless depending on corrosion concerns)
- Plastic Cooling tubes to recirculate coolant in the array

Also, the additional material handling equipment is required:

- Storage Baskets: These will be inserted in the tubes to enable extraction of all the containers at one time. They could be constructed of carbon steel and should not be exposed to corrosive atmospheres since they will be encapsulated inside the storage tube. Because the complex 21 container (which had an integral lifting device) is no longer available, and the current containers (AT400A inner vessel and metals and oxides container) do not have any obvious lifting means, these baskets to lift the containers in and out of the storage sleeves must be provided. A sketch of the baskets is included in Appendix No. 6.

E. DOE 6430.1A ANALYSIS

The building and related systems will provide physical protection and confinement to the product/boundary containers. The solid block array will provide physical protection to the product/boundary containers and also prevent them from being displaced during an accident. The material containers will provide physical protection and confinement during handling operations. Product/boundary containers will provide 2 layers of physical protection and confinement. The block provides shielding and cooling will be provided by recirculating water in tubes and heat exchangers.

The storage containers selected for this project will be a system that provides at least 2 layers of confinement and limited physical protection. There will be three container systems to be stored and include the plutonium metals and oxides containers (cylindrical stainless steel product and boundary assemblies), the AT400A inner vessel (for weapons components), and the Y-12 containers (for uranium). The Y-12 fits inside the metals and oxides container. The use of the water bath with a gantry robot impacts the following design issues:

1) Containment of Potential Release: The storage vault area will be HEPA filtered to prevent releases, should the container system be breached. The storage drywells with their shield plugs will act as a confinement and have a leak detection system for trace gases from the material containers. The use of HEPA filters in the operational area will be designed to preclude contamination of the environment should a product/boundary container be breached. The facility will be configured and monitors/alarms provided to eliminate the likelihood of contamination from migrating to outside the immediately affected area. Potential contamination should be controlled as close as possible to handling areas with fume hoods, or similar apparatus, with sufficient capture velocity, to minimize migration. Administrative controls will also be utilized.

2) Criticality/Storage Container Spacing: The design of this system must comply with current container packaging units for all materials proposed for storage. The cast iron or cast-in-place concrete array will be uniform throughout all storage locations. The variation in storage package envelope, and associated container-to-container stack height, will be accommodated by the use of a storage baskets, drywell spacing, and the shielding provided by the array block. The design of the product/boundary container spacer/basket should implement a positive sizing feature to prevent inadvertent spacing of the containers.

3) Control of Contamination: The HEPA filters and storage containers prevent the spread of potential contamination. In the rare event that

product/boundary container is breached or contaminated within the operations area, the confinement ventilation system is designed to eliminate migration. Also, radiation monitors, SNM detectors, and personnel will be assigned to ensure that contamination is not tracked into the change rooms or out of the MAA. Administrative controls to assure container cleanliness and integrity are required to verify external/internal surface cleanliness.

4) Material Accountability: The drywells, shield plugs, and automated container retrieval system should be designed to provide a substantial barrier to unauthorized removal of stored materials. The combination of large physical size and unique access to the vault area present a defense-in-depth approach to storage security; providing an extended period of time for detection. Electronic tamper indicating devices will be required to record entry to each drywell.

5) Emergency Power/Critical Systems: Due to the need to maintain cooling in the array standby power may be required, should the active cooling approach be selected.

F. ADVANTAGES AND DISADVANTAGES

The advantages of this storage concept are that it proposes a relatively conventional system, and thus should be relatively easy to validate, assuming that all systems are engineered, explained, and documented thoroughly. It provides little structural impact on the facility, since the components can be designed to fit entirely within the existing envelope as demonstrated by the original CDR.

However, there are major disadvantages and uncertainties. Firstly, the storage system requires active cooling apparatus (tubing, pumps, chilled water, valves, generators, HEPA filters and HVAC) to maintain the containers in the array at the required temperature (149 deg. F). If the active cooling apparatus were to fail, a finite amount of time would be available to restart the system before the maximum container temperature is exceeded. True passive, safe, shutdown of the storage array is not possible. An active system will be required at some point, because the soil surrounding the structure acts as an insulator, and not a conductor, due to the fact that the soil is relatively dry. The original CDR did not document the assumption that the soil would conduct heat away from the array adequately. Since February, 1994, LANL has conducted tests to determine the thermal conductivity of the soil and discovered it to be inadequate.

Since the storage hall is HEPA filtered, the volume of air to be treated is large, and thus the equipment required will be larger, complex, and expensive to install and maintain. The cooling apparatus will also be complex and costly. As proposed in the original CDR, the iron blocks will be difficult to install, since they will rest on a floor which is not particularly flat, and wedges will be needed. Additionally, they will be hard to install due to the interface between the dovetail slot and the cooling tubes required between each block. Alternatively, the cast-in-place concrete will be easier to install and maintain, but also requires active cooling systems. In either case, decontamination and decommissioning will be difficult due to the large mass of material required in the array.

G. COST ESTIMATE

Based on the information presented in Appendix No. 3, the original CDR, and in the Value Engineering Study (February, 1994), the cost estimates for the solid block concepts (all with active cooling) are as follows:

Large Cast Iron Blocks:	$ 4,088,018
Cast Iron Tubes:	$ 7,012,000
Concrete Block:	$ 2,911,000

However, as discussed for the pool storage option, the complex 21 container is not longer available, and containers without lifting devices will be used. Therefore, baskets to enable material handling must be provided. The baskets will cost about $1,000 each. Assuming 664 storage cavities (per the CDR), this yields an additional cost of about $664,000. Also, the cost of the building modifications ($6,865,088) should be added. A summary of the original CDR costs is included in Appendix No. 5. This yields total building, storage array, and SFE costs (excluding contingency) of:

Large Cast Iron Blocks:	$ 12,409,106
Cast Iron Tubes:	$ 14,541,088
Concrete Block:	$ 10,440,088

4. STORAGE OPTION NO. 4: PASSIVE AIR COOLING

A. DESIGN CONCEPT

INTRODUCTION:

The use of the passive, air cooled concept has been evaluated because it can provide a long term storage solution. This concept was investigated in more detail than provided in the Merrick report, since a review of those concepts revealed that there were only minor things which could be changed to enhance the concept. Additionally, the original CDR and Option Studies did not fully develop the passive air cooled system as a bona-fide alternative. Therefore, this concept deserved a detailed analysis. It has the following features:

1. Provides indefinite storage terms. Once the containers are placed in the storage array, confinement and physical protection is provided in a truly passive manner. Except for MC&A and security monitoring, no active mechanical systems are needed.
2. Provides physical separations between the operations and storage vault. These areas essentially act as separate buildings.
3. Meets the criteria and intent of DOE 6430.1A.

VARIATIONS:

Three feasible confinement variations of this concept were examined, which primarily relate to the charge hall and if and how confinement between the material containers and atmosphere in the Charge Hall is necessary. The three variations are:

a. HEPA filtered Charge Hall
b. HEPA filtered Container Handling Machine/Non-HEPA filtered Charge Hall
c. Non-HEPA filtered Charge Hall - use tertiary capsules

Additionally, two variations of the floor plan and vault configuration were investigated. Each could accommodate the passive air cooling concept and any of the confinement options listed above. The different configurations were:

a. Floor Plan No. 1: Utilize a portion of the basement, as shown in the new CDR, with a 10 high container stack, and about 600 drywells. (Appendix No.7)

b. Floor Plan No. 2: Utilize the entire basement as a storage vault. This would result in a container stack of 6 high, and about 1000 drywells. (Appendix No.7)

Each floor plan alternative requires significant renovations and modifications to comply with the design constraints presented by the storage array and the desired configuration. After storage configurations were determined, other functional areas were reorganized as needed. The intent was to minimize disruption to those areas not affected by installation of the storage array. Therefore, only the affected areas of the building were examined.

The first alternative (Floor Plan No. 1) stores the product/boundary containers in a 10-container-high configuration. This configuration will require an approximate drywell length of approximately 17 feet. Space is available for at least 600 18-inch-diameter drywells. The storage configuration will require extensive modifications to the basement and first floor to provide single-room access to the drywells. The product/boundary containers are accessed and removed from the drywells with a Container Handling Machine supported from a bridge crane. This option will require extensive alterations to the existing structure and will significantly revise the layout of the material access area (MAA) presented in the original CDR. Up to 5 containers could be extracted from the drywell at one time if the existing roof is left on, but the entire contents could be extracted if the roof was raised about 4 ft.

The second alternative (Floor Plan No. 2) stores the boundary containers in a 6-container-high configuration and uses the entire basement area for storage. The space on the first floor is organized in a manner similar to that shown in the original CDR; consequently, less structural alterations are required. However, only three containers can be removed from the drywell at one time.

The floor plan and confinement variations, however, do not significantly affect the storage concept or its thermal performance when specifically applied to NMSF. Any confinement alternative can be applied to each of the floor plans. Confinement is discussed separately from the facility modifications.

STORAGE CONCEPT / THERMAL PERFORMANCE:

The thermal characteristics of the system were examined for Floor Plan No. 1 only, because it was believed to be the most conservative case, given the fact that the array is higher than in the 6 high storage option and the effective stack height is less. The analysis is conservative and slight variations between the two variations should not significantly affect the system performance.

In the dry storage concept, nuclear materials in the form of metals and oxides will be stored in multi-layered, product/boundary containers housed within the existing NMSF located at TA-55. The product/boundary containers and their contents will be cooled by a passive, self-regulating, natural convection cooling system that induces buoyancy driven ambient air to flow across the exterior of the outermost storage containers. There will be no contact between this cooling air and the stored nuclear material.

Nuclear Material will be stored in any one of three containers. Metals and oxides will be stored in containers that have already been designed, which consists of a stainless steel product and boundary container system. Weapons components will be stored in the inner, steel container of the AT400A container system. Uranium will be stored in Y-12 containers, or in other approved devices. These containers represent primary and secondary confinement and also provide a limited amount of physical protection.

These product/boundary assemblies will be placed in a spacer/basket assembly to support them in the tertiary confinement drywells and also to aid with material handling. The spacer/basket assembly will ensure the product/boundary container assemblies remain in a subcritical storage geometry. The spacer/basket assembly and containers nested within, will be placed in an airtight tertiary capsule, or capsule. This capsule is then placed in the drywell, which is a permanent part of the facility. The storage option selected will allow 10 product/boundary container assemblies to be retrieved at one time. Please refer to Appendices No.5, No.6, and No.7.

The drywells will be positioned into a storage array that will promote efficient cooling and maintain a subcritical geometry. They will be vertically located and supported at their lower ends on the existing basement floor of the storage vault and supported at their upper ends by a charge face structure that also provides radiation shielding for workers performing material handling operations. The product/boundary containers have been designed by DOE and LANL, but may be modified and upgraded. Conceptual design of the drywells will be started under this project, but operational funding may be required to complete the design and fabrication. The drywells, charge face structure, and building modifications required to incorporate this storage and cooling concept into the NMSF are included in the scope of the facility renovations.

The charge face structure (a steel and concrete composite deck) will divide the storage vault into two separate areas. The area above the charge face will be used for material handling operations. The area below the charge face structure, in conjunction with the existing basement walls and floor, will form the major element of the cooling circuit. The remainder of the cooling circuit will consist of the entrance louver, the entrance shielding labyrinth, and the outlet vent. Cooling air will enter the facility through a storm proof louver fitted with a bird screen located in the existing south wall of the facility. The air will then flow through a concrete labyrinth (designed to prevent radiation streaming) and into the lower section of the storage vault where it will be drawn through the storage array. The air will be heated by the storage array (bank of drywells), become buoyant, and rise relative to air of lower temperature. This is a result of differential density effects. The heated air will rise through an outlet vent to the atmosphere. The outlet vent will be a vertical shaft extending from the charge face through the existing roof structure, at the northern end of the existing facility. The action of heated air rising through the outlet vent will induce additional ambient air into the inlet and through the array, thus creating a self-sustaining, natural thermal siphon cooling flow.

In order to employ this cooling method, the buoyancy head pressure generated by the rising warm air must be sufficient to overcome the resistance to flow through the storage array, including entrance and exit losses. To determine whether this cooling concept will produce the desired effect, calculations were performed using local design data, maximum temperature constraints of the stored material, the physical constraints of the existing facility envelope, and a heat output of 20 Kw from the stored material. The parameters used were an entrance air temperature of 89°F (summer design temperature for Los Alamos, New Mexico), an exit air temperature of 137°F (based on a maximum stored material temperature of 60°C), and a difference in height from the center of the entrance louver to the point of exit from the outlet vent of approximately 30 feet. The results of these calculations were as follows:

- The 48°F temperature difference between entering and leaving air and a 30 foot difference in height between the intake louver and the outlet vent point of exit creates an available buoyant head pressure of .027 inches of water.
- A flow rate of approximately 1673 cubic feet per minute (CFM) of cooling air will be required to remove 20 Kw of heat release with an 89°F entering air temperature and 137°F leaving air temperature at 7500 feet above sea level.
- 1673 CFM of ambient air flowing through the cooling circuit will encounter a resistance to flow of approximately .0006 inches of water.

The available buoyant head pressure far exceeds the resistance to air flow through the cooling circuit. This is based on 1673 CFM of cooling air required to remove 20 Kw of heat released from the stored material. Therefore, natural convection will produce the desired cooling effect.

In fact, the calculations indicate the actual air flow through the storage array would be greater than 1673 CFM. This is evident by the relatively high available buoyant head (.027 inches of water) in comparison to the total resistance to air flow (.0006 inches of water). A higher air flow would result in a lower leaving air temperature and thus a lower stored material temperature as well as a reduction in the available buoyant head pressure. On the other hand, as the air flow through the storage array is increased, the resistance to air flow will also increase exponentially. At any given point, the system would actually operate at a state where the resistance to air flow exactly equals the available head pressure. The actual leaving air temperature, stored material temperature, cooling air flow rate, available buoyant head pressure, and resistance to air flow through the cooling circuit would be determined by an iterative process where all five functions are interrelated.

The cooling air flow rate of the natural convection concept will be directly affected by the quantity of stored material and the corresponding decay heat output. As the quantity of stored nuclear material is increased, the cooling air flow rate will naturally increase to the point where the resistance to flow through the cooling circuit begins to exceed the available buoyant head pressure. At this point, any increase in the quantity of stored material will result in a leaving air temperature higher than 137°F and a resultant stored material temperature that exceeds the 60°C upper temperature limit. Once this maximum balance point has been reached the capacity of the system can only be increased by increasing the effective stack height, (i.e., the height difference between the center of the entrance louver and the point of exit from the outlet vent). This will also increase the available buoyant head pressure.

The effective stack height could also be increased by constructing an extension to the outlet vent. The environmental compliance issues related to such an extension would have to be addressed, at that time when the capacity of the facility may need to be increased.

Wind effects on the building, with proper design, will also increase the vault flow rate by inducing a negative pressure at the outlet vent exit point, thereby increasing the available buoyant head pressure and in turn increasing the flow of ambient air through the cooling circuit. This flow enhancement will reduce the temperature of the drywells and the stored material relative to their calm day values (which are dependent on wind direction and velocity). No credit has been taken for the effect of vault air flow enhancement by the wind in prediction of temperature for this study. However, both positive and negative effects of wind should be analyzed during more advanced study and design phases.

The scope of the investigation thus far included demonstrating this cooling concept would produce the desired cooling effect within the physical constraints of the existing facility, the local design conditions, and the material storage temperature limits rather than determining the actual points of operation. Therefore, determination of actual operating points and resultant stored material temperatures for different material loading levels and different entering air temperatures should be accomplished during more advanced phases of design. However, it is apparent from reviewing the calculations, sufficient excess capacity apparently exists in this concept, even with the project constraints, to provide some contingency for overcoming the occurrence of higher ambient temperatures than the design summer day as well as partial blockage of the entrance louver. The calculations are included in Appendix No.7.

B. FACILITY MODIFICATIONS

The configuration of the storage array is the primary influence on how the rest of the facility is planned and designed. The configurations presented here require significant renovations and modifications to comply with the design constraints and required operations. Three basic criteria were used to determine the most effective renovation plan, in addition to regulatory, safety, and security concerns. They are:

- Provide physical separation between storage, operations, and administrative areas.
- Provide a confinement system (ventilation or some other means) in the Storage Vault when accessing the material.
- Provide more space for assay and material handling functions, in comparison to the original CDR.

Additionally, a number of confinement options were investigated. The confinement methods have significant impacts on material handling, HVAC, and facility layout and configuration. By explaining confinement options first, it is easier to understand the advantages, disadvantages, and considerations inherent in the different ways a passive cooling concept can be applied to the NMSF.

CONFINEMENT PHILOSOPHY:

Three options for confinement in the Charge Hall were investigated (HEPA filtered space, HEPA filtered Container Handling Machine, or the use of tertiary capsules). The design philosophy of the each alternatives is to provide a passive storage capability. This philosophy dictates that active systems are not required, nor permitted, for indefinite storage periods.

When the product/boundary containers are moved into the operations area of the building, and removed from the drywell, they will be subject to a confinement ventilation system. Therefore, a physical separation must exist between the operations and storage areas. The renovation plan presented in this report can provide this separation via concrete walls, airlocks, and alarmed doors. Other storage options considered placed the operations area (which will always have to be housed within a HEPA filtered environment) over top of the storage area (not

HEPA filtered). In some accident scenarios, it was believed that the floor could be breached, thus creating the possibility of release. A horizontal and physical separation will preclude such an event.

1.) TERTIARY CAPSULES:

Air tight, sealed, tertiary capsules could be used to contain the product/boundary container assemblies and storage baskets in the storage array. The capsules would be inserted into the drywells. Use of tertiary capsules would eliminate the need for confinement ventilation in the Charge Hall if they were designed to prevent release during a Design Based Accident (DBA). Such accident scenarios could include a handling accident involving the material handling machine/crane. The product/boundary containers would always be contained within a sealed, tertiary confinement capsules when moved within areas of the building which do not have confined ventilation systems. The tertiary capsule will only be opened within the HEPA filtered areas of the facility. A shielding bell will be used when extracting the capsules from the drywells.

2.) HEPA-Filter Container Handling Machine/Cask:

ALARA concepts require the use of a shield cask for handling of stored materials. This approach allows the use of the storage spacer/baskets without a surrounding storage capsule. At all times during material handling in the Charge Hall, when the basket and stored product/boundary containers are exposed, a small, self-contained HEPA-ventilation system on the shield cask will be used to create a minimum 125 fpm (feet-per-minute) capture velocity at the open end of the shield cask. This high velocity airflow will effectively prevent migration of contamination disturbed during handling. The use of localized HEPA systems will eliminate storage vault HEPA-ventilation.

3.) HEPA-filtered Storage Area:

This method adopts a conventional, field-proven approach. The area above the storage deck would be provided with HEPA-filtered exhaust ventilation to utilize the building envelope as the third confinement barrier. Due to minimal openings and limited personnel access required, a relatively low amount of airflow would be required to maintain negative pressure. This approach uses the shielding cask basket transfer method outlined above.

ALTERATIONS AND MODIFICATIONS:

FLOOR PLAN NO. 1 (10 HIGH ARRAY CONFIGURATION)

The product/boundary containers are stored in a 10 high configuration within a spacer/basket assembly. The spacer/basket assemblies will maintain the product/boundary containers in a subcritical geometry. This configuration provides secondary confinement and limited physical protection. The assembly is then placed in a tertiary capsule, which is subsequently placed in a drywell. The tertiary capsule will provide confinement and physical protection. It will be sealed air tight and will be equipped with a hook, ring, or other suitable device to enable lifting. The tertiary capsule will have a shielded lid, or cover, to prevent radiation from entering the storage-array vault. This configuration will require an approximate tertiary capsule length of 15'-6" and a drywell length of about 17'-1". The tertiary capsules, with their contents, are accessed and either inserted or removed from the drywells with a crane-type mechanism, complete with a shielding bell or shroud. If the tertiary capsule is not used the baskets are placed directly in the drywell. See Appendix No. 7 for floor plans and proposed building modifications.

The storage array will consist of approximately 600 drywells. The drywells will be constructed of carbon steel with a flame sprayed, aluminized coating to retard corrosion. A watertight lid will be placed over each drywell, and will also represent another barrier for security and MC&A needs.

The drywells will be supported by a new, approximately 30-inch-deep composite steel-and-concrete deck, which is designated as the charge-face. This deck will be supported from the existing basement walls, which will have to be reinforced for the new load. The drywells will positioned over sockets and pins fastened to the existing basement floor. These will provide lateral stability at the basement level as well as limited vertical support.

The deck will serve four basic functions:

- It serves as a platform from which to access the contents of the tertiary drywells.
- It provides lateral and vertical support for the drywells.
- It replaces the first floor slab and provides stability and stiffness for the

building.

- It provides radiation shielding for the material handling workers from the stored material.

This storage configuration will require extensive modifications to the basement and first floor to provide single-room access to the stored containers. Extensive alterations to the existing structure will be needed. The layout of the Material Access Area (MAA) presented in the original CDR is completely changed.

The following modifications are proposed:

1. The slab between the basement and the first floor will be demolished. This will be replaced with the composite deck for the charge-face structure.

2. A reinforced intake opening no less than 240 gross square feet in size will be cut in the south wall. Concrete shielding baffles will be constructed in the basement north of the intake. Sufficient room must be provided between the baffles and the intake to promote adequate air flow.

3. A outlet vent will be constructed at the north end of the building. An opening, no less than 28 feet, 4 inches long by 4 feet wide, will be cut in the existing roof slab. A short vent structure, constructed of reinforced concrete walls with a rain cap and louvers, will be installed. The roof slab around the vent will be reinforced. Additional items required by security criteria will be added to prevent unauthorized entry.

4. The existing concrete basement walls on the east and west sides of the storage array will be reinforced and thickened to support a new gantry crane, which will be used to access the contents of the drywells.

5. Some of the existing shear walls on the first floor will be demolished to provide unencumbered access to the top of the storage array. They will be replaced with other transfer beams, walls, or bracing. These new structural mechanisms will be designed to resist the forces currently resisted by the shear walls.

6. A new north-south, full-height wall will be constructed to separate the vault storage area from the remainder of the facility. This wall will replace the existing column line and will provide shielding for the occupants of spaces

adjacent to the storage vault. It should also provide more stiffness to that portion of the structure. Additionally, this wall will be extended to the exterior wall on the west side of the building, which will create a separation wall for the pump room.

7. Airlocks/container transfer mechanisms will be constructed between the storage array and the Pack/Unpack Area. These devices will provide the means with which to transfer the tubes and containers. Also, a dumbwaiter will be constructed between the basement, mezzanine, and first floor to ease container transfer between these levels.

8. A new bridge crane, with a Container Handling Machine, will be installed to load and unload the contents of the drywells. A minimum clearance of 2 feet from the walls to the edge of the drywells must be provided to allow for sufficient access.

9. Because the intake is located below the current grade, storm drainage collection and piping will be provided to prevent flooding of the vault.

10. The existing soil on the roof will be removed.

11. The existing roof over the storage array will be demolished. A new roof, constructed at a higher elevation, will be installed to provide room for the bridge crane.

12. A new mezzanine will be constructed between the basement and the first floor. This adds approximately 3700 square feet of usable space to the facility without exceeding the existing envelope. The NDA lab will be located on this new level.

13. A composite steel-and-concrete deck, approximately 30 inches deep, will be installed in the vault area. The top of the deck will be approximately 18 feet above the existing basement floor. The deck will span approximately 28 feet, 4 inches between the existing basement walls. The existing wall that currently divides the existing vault in half will be removed. The deck will consist of half-inch steel plates, top and bottom, and half-inch thick webs (at 2 feet o.c.), creating an orthotropic deck. Holes, 18 inches in diameter and spaced at 2 feet o.c. north-south and in a staggered arrangement east-west, will be provided for the drywells. The drywells will be either welded or mechanically fastened to the deck, depending on operational, safety, and

decontamination and decommissioning (D&D) concerns to be addressed during further study. Concrete, or another hydrated material, will be placed in the voids to provide shielding. The deck should be designed and constructed for minimal deflection and with future facility modifications in mind.

14. Both existing interior stairways will be reconfigured and/or relocated to allow access to the new mezzanine. Additionally, a new stop will be added to the elevator for the same purpose. A new landing, matching the level of the new mezzanine, will have to be constructed in the area of the elevator and stairs on the north end of the building.

15. Most of the partitions, electrical, and mechanical items on the first floor will be demolished. The entire space will be reconfigured to accommodate change rooms, a security station, decontamination stations, and a revised material entry airlock near the garage.

In comparison to the original CDR, most functions have been relocated.

Adequate space has been provided for all functions. The boundary of the MAA has been expanded, in comparison with the original facility design, to encompass the Change Rooms. A Security station has been positioned such that personnel within it can control routine access to the MAA. Shipments arriving via a truck are processed in a separate area to reduce congestion and confusion. Assay, pack/unpack, and staging functions are located close to the storage array, but are segregated from it.

FLOOR PLAN NO. 2:

In Option 2, the storage array will consist of no less than 1,000 carbon-steel storage drywells sprayed with an aluminized coating to retard corrosion. This option uses a configuration in which the product/boundary containers, stacked 6 high, are retrieved in batches of three with a Container Handling Machine. The drywells will be located in both alleys of the as-built storage vault and in the basement hallway. See Appendix No.7 for floor plans and proposed building modifications.

Each drywell will contain 6 product/boundary containers. Each drywell will also contain an inner tertiary capsule, a spacer/basket. The tertiary capsule will only be used if the charge hall is not HEPA-filtered. If the hall is HEPA-filtered the spacer/baskets can be inserted directly into the drywells. A shielding plug will be installed in the top of each drywell to prevent radiation from entering the storage-array vault area. The drywells will rest on sockets and pins fastened to the existing basement floor. These sockets and pins will provide lateral stability at the basement level.

The drywells will extend flush to the surface of a new, approximately 2-foot-deep composite charge-face structure deck supported by the existing basement walls. The top of the deck will be approximately 11 feet above the basement floor. The drywells, including the shielding plug and the deck for the charge-face structure, will be approximately 11 feet long.

In this option, the storage array, baffles, intake, and space for the outlet vent will occupy the entire basement. This option will require less demolition and new concrete than the first and will not require the demolition of the first-floor slab or of the existing roof over the storage array. As a result, the displacement of the first-floor activities is minimized.

The deck for the charge-face structure will serve the same basic functions that the deck described in Floor Plan No. 1 does, except that it does not replace the first floor slab, since that slab remains in which to access the drywells.

The drywells will be spaced on 2-foot centers north-south and staggered east-west to promote even air flow. The drywells will be cooled by the natural thermal convection that develops when outside air is allowed to circulate through the array. The heat developed by the storage contents will pull air through the array. An air-intake vent and louvers will be provided in the south wall near the current location of the stacker-retriever to provide ventilation for the two alleys on the west side of the building. A second intake will be provided in the south wall to provide ventilation for the array located in the basement hallway. Each intake will be below current grade and thus will be constructed to prevent radiological penetration of the storage area. Eighteen-inch-thick concrete baffles will isolate radiation from the outside.

Floor Plan No. 2 will require a moderate amount of structural modifications. The scope of this study did not permit a detailed structural analysis of the modifications' effects on the facility's performance in a seismic event or other natural phenomena. The study assumed that other modifications could be added without significantly affecting the arrangement of the storage array and related functions.

The following modifications are proposed:

1. Two openings in the south wall will be cut and reinforced. The intake for the two westernmost alleys should not be less than 160 square feet , while the intake for the array in the basement hallway should not be less than 120 gross square feet. Concrete shielding baffles will be constructed in the basement north of the intake. Enough room must be provided between the baffles and the intake to promote adequate air flow.

2. Concrete corbels, brackets, or other appropriate reinforcement will be added to the existing concrete basement walls on the east and west sides of each alley and the hallway to support the new composite decks.

3. A new shear wall on the first floor will be installed to separate the Staging Area and Pack/Unpack Area. Other shear walls will be installed to separate Mechanical Room 1 from the Pump Room and to segregate the NDA Area. These should add to the stiffness of the building and enhance its seismic response.

4. Both existing interior stairways will be reconfigured to allow access to the storage-array charge-face deck; a new stop will be added to the elevator for the same purpose. A new stairwell will be constructed near the mechanical rooms. A new landing, matching the level of the deck, will be constructed on the north end of the building in the area of the elevator and stairs. In accordance with recent security and material-access directives, each entrance to the storage array must be provided with relatively small vestibules with two interlocking and alarmed doors to serve as access control points.

5. Airlocks/container-transfer mechanisms will be constructed between the storage array and the NDA and Pack/Unpack areas. These devices will provide the means with which to transfer the containers to storage.

6. A Container Handling Machine will be installed to remove the contents of the drywells. A minimum clearance of 2 feet from the walls to the edge of the drywell must be provided to allow for sufficient access. An automated bridge crane, as in the other, could also be used.

7. Because the intakes are located below current grade, adequate storm drainage collection and piping must be provided to prevent flooding of the vault. The drawings do not address this, and detailed analysis should be performed in further studies and/or detailed design.

8. The existing soil on the roof will be removed.

9. A vent will be constructed at the north end of the building. An opening of no less than 4 feet clear width, the entire width of the storage array will be cut in the existing roof and first-floor slab. A short exhaust structure, constructed of reinforced concrete walls with a rain cap and louvers, will be installed on the roof. The roof slab will be reinforced. Additional items required by security criteria will be added to prevent unauthorized entry.

10. A composite steel-and-concrete deck, approximately 2 feet deep, will be installed in the vault area for the charge-face structure. The top of the deck will sit approximately 11 feet above the existing basement floor. The deck will span approximately 13 feet, 8 inches between the existing basement walls in the first two alleys and almost 22 feet, 6 inches between the walls in the basement hallway. The existing walls, which currently divide the existing vault in half and the basement hall from the vault, will each be extended northward.

The deck will consist of half-inch steel plates, top and bottom, and half-inch-thick webs (at 2 feet o. c.), creating an orthotropic deck. Holes (18 inches in diameter) spaced at 2 feet o.c. north-south and in a staggered arrangement east-west, will be provided for the drywells. The drywells will be either welded or mechanically fastened to the deck, depending on operational, safety, and D&D concerns to be addressed during further study. Concrete will be placed in voids to provide shielding. The deck should be designed and constructed for minimal deflection and with future facility modifications in mind.

C. PROCESS AND MATERIAL FLOW

Some differences in the floor plan exist in terms of process flow. Each floor plan is workable, and the differences in each appear to be minor. The major differences are the physical locations where the different activities occur. In Floor Plan No. 1, many activities take place on different levels whereas on Floor Plan No. 2 most assay and staging occur on the first floor. The process flows for each floor plan are described below.

FLOOR PLAN NO. 1

This section briefly describe the process flow through the facility. The purpose of the description here is to explain the steps required to insert and retrieve containers from the array. A synopsis of the material/process flow follows:

1. Shipping containers arrive by Safe Secure Transports (SST's) which parks in the garage.

2. The trucks are unloaded and the shipping containers are moved into the airlock.

3. From the airlock, the shipping containers enter the MAA. Items that need to be unpacked and assayed first are transferred into the Temporary Staging Area on the first floor. Items to be unpacked later are taken down the elevator to the basement, where plenty of space is available.

4. Once in the Pack/Unpack Area, the product/boundary containers are removed from the shipping containers, placed in jigs or other apparatus to provide criticality spacing, and then transferred to the NDA lab. As shipping containers are emptied and product/material containers are moved through the NDA lab, more shipping containers are retrieved from the basement and brought up by the elevator to the Temporary Staging Area.

5. The empty shipping containers are tested for contamination, and if they are clean, can then be moved to the outside of the building, through the airlock and garage, for transport off site.

6. In the NDA Lab the items are assayed. From there, the containers are placed in the dumbwaiter and transferred to the Pack/Unpack Area. In this

area, they are loaded into the basket/spacer assemblies, are placed in the tertiary capsules at the tube loading pit. The tube loading pit allows the tertiary capsule to be loaded vertically, and a hoist is provided in the ceiling. The tertiary capsule is temporarily housed within a permanent transfer cask, that is hydraulically moved by a piston or other suitable mechanism, between the Storage Vault and Pack/Unpack Area within an airlock.

7. After the tertiary capsules are loaded, the capsule is sealed. The airlock doors close, and the cask is moved into the vault. Once in the vault, airlock doors open and a jib crane retrieves the tertiary capsule and places it in an empty drywell.

8. The Container Handling Machine, with integral shielding bell, then retrieves the tertiary capsule from the drywell and places it in the desired location. The machine is securely fastened to the deck during insertion and retrieval operations.

Material could also arrives by means other than trucks. Material will also come from PF-4 and enter the NMSF through an existing tunnel in the basement. Material from PF-4 would have to be placed on the elevator or dumbwaiter and taken to the first floor before it could be placed in the array.

To assay or remove material from the storage array, the opposite of the above process will be used. All other functions and material flows described in the CDR remain essentially unchanged.

FLOOR PLAN NO. 2

The material flow and material-handling process are changed somewhat from that presented in the original CDR. The changes are the result of rearranging the floor space and relocating certain functions. A brief synopsis of the material/process flow follows:

1. Shipping containers arrive at the facility by SSTs and park in the garage.

2. The trucks are unloaded and the shipping containers moved into the airlock.

3. From the airlock, the shipping containers enter the MAA and subsequently enter the Staging Area on the first floor.

4. The shipping containers are temporarily stored in the Staging Area until such time that they can proceed to the Pack/Unpack Area, just to the south, through a new set of double doors.

5. Once in the Pack/Unpack area, the product/boundary containers are removed from the shipping containers. They are then taken into the NDA lab.

6. From the NDA lab (or the Staging Area), the product/boundary containers may either be taken to the elevator and transported to PF-4 or placed in the airlock/container transfer mechanisms. The airlock/container transfer mechanisms could consist of isolation valves, shielding shrouds, and lifting devices to transfer items vertically to the tube-handling machine.

7. Once in the airlock/container transfer mechanism, the product/boundary container can be retrieved in the vault area by an automated gantry crane with a shielding shroud or tube. Before retrieving the material from the transfer mechanism, an isolation valve (Valve 1) is placed over the storage location. A second mechanism, a combination isolation valve-plug handler (Valve 2) moves to the location, mates to Valve 1, and removes the plug. Valve 1 is then closed, and Valve 2 moves aside. At all times during the material-handling process, an isolation valve or plug isolates the interior of the tertiary containment drywell from the top side of the vault interior and helps protect the vault area from radiation.

8. From the airlock, the Container Handling Machine retrieves the containers from the airlock and places the containers in the 18-inch-diameter carbon-steel drywell attached to the charge-face deck. By employing a shroud on the machine, the need for HEPA filtering this space is eliminated.

   The Container Handling Machine mates to isolation Valve 1. The machine is also fastened to the deck to minimize the danger of overturning and to obtain a positive seal. Valve 1 is then opened, and the material is lowered into the tertiary capsules. Valve 1 is closed. After the valve is closed, the machine moves away from the location. Isolation Valve 2 mates to Valve 1 and replaces the shielding plug; both valves then move away. A more detailed discussion of valves and the Container Handling Machine is contained in Section D below.

9. Material could also be placed directly into the storage array from either the Staging Area or the NDA lab without entering the facility through the garage. This material will come from PF-4 and enter the NMSF through the existing basement tunnel. Material from PF-4 will be placed on the elevator and taken to the first floor before it can be placed in the array.

To assay or remove material from the storage array, the opposite of the above process is used. All other functions and material flows described in the CDR remain essentially unchanged.

D. SPECIAL FACILITIES EQUIPMENT (SFE)

Specialized equipment is required to make the dry-storage concept practical. The most important items, other than the required monitors, are the drywells (tertiary, spacer-basket assemblies) and the Container Handling Machine. Equipment similar to that described below is already in service in a number of locations. Discussions with the operators and designers of the Fort St. Vrain facility indicated that the necessary technology and capabilities exist, are feasible, and have been successfully used for many years. It should be noted that there are three product/boundary containers planned for storage in this facility, but they are common to other sites as well. They include the metals and oxides container, the AT400A inner vessel (for some weapons material), and the Y-12 (for uranium). These containers are discussed more thoroughly in the **Functional and Operations Requirements Document**, (October, 1994). Sketches of the storage container and SFE discussed below can be found in Appendix No. 6

DRYWELLS

The drywells will be attached to the vault deck and supported from the floor and provide the outermost level of physical protection to the containers/basket assemblies (discussed below). The drywell will be monitored for leaks from the containers, akin to a fire alarm.

Based on experience in similar facilities, carbon steel drywells with a flame-sprayed corrosion-resistant aluminized coating will be used. Foster Wheeler Energy Corp. and GEC Alsthom Engineering Systems Ltd, who designed and developed the Fort St. Vrain facility and its various components (which use many features that this configuration proposes) have discovered that brittle fracture was the most significant problem in fabricating and certifying the drywells. This may be solved by varying the nil ductility temperature of the steel. The drywells should be designed and constructed to ASME NQA-1 Standards.

TERTIARY CAPSULES

Tertiary capsules would be used if the Charge Hall was not HEPA filtered. The tertiary capsules contain the basket assemblies, within which the product/boundary containers are nested. Although the product/boundary containers provide limited physical protection and two confinement barriers, the tertiary capsule provides the balance of the physical and confinement protection. The tertiary capsules are airtight and will be designed and fabricated to withstand the credible design based accident.

The tertiary capsules will have a bolted, shielded lid and will be sealed with neoprene, or other suitable gasket material. A lifting hook will be provided on the top.

Detailed design of these capsules would be accomplished in Title I design, and will be designed and fabricated to NQA-1 quality standards. They will also be tested, on a random basis for various accidents as determined in the Hazards Analysis.

It is anticipated that the capsules will be fabricated from carbon steel and a flame sprayed aluminized coating will be applied to prevent corrosion. They will be charged with an inert, trace gas, as a leak detection tool.

The capsules should be provided with shielding plugs, made from either cast iron, Bisco, depleted uranium, or some suitable combination of materials. The shielding plugs must be provided with a hook, ring, or inset by which they can be lifted. The capsules should be provided with a safe and secure means of supporting themselves in the drywell.

SPACER BASKET ASSEMBLIES

Spacer-basket assemblies will serve the following purposes:

1. Ensure that subcritical geometry is maintained between the product/boundary containers.

2. Act as a shock absorber for the product/boundary containers if the tertiary capsule is dropped or is involved in an accident.

3. Ease material handling operations for inserting and extracting containers from the tertiary capsule.

These assemblies will be fabricated from expanded metal steel bar, tubing, or a combination. Different size baskets will be needed to accommodate the metals and oxides containers and AT400A inner vessels, but should be similar in design and cost. The assemblies will be flexible enough to accept the jigs discussed below.

These assemblies will be designed to NQA-1 standards. If the Complex 21 container was available, the spacer basket assemblies might not be needed, because they have an integral lifting device. However, because the AT400A inner vessels and metals and oxides containers do not have any lifting devices, baskets must be provided.

CONTAINER HANDLING MACHINE

The Container Handling Machine is the primary means by which tertiary capsules may be retrieved from the drywells. The machine will raise and lower capsules or baskets into place. It must provide shielding as well as an approved means of being fastened to the deck to prevent overturning while the drywell is open. The machine will be supported and moved on apparatus similar to that of a bridge crane.

Preferably, the machine should be capable of removing the drywell cover, picking up the containers, replacing the cover, and moving away from the tube location in one operation. The machine should have outriggers to prevent overturning while in motion. Additionally, a hoist or other lifting mechanism must be a part of the apparatus. It should have a electronically controlled grapple to pick up the containers. Controls should be as automated as possible, but the ability to perform operations manually with cranks should be provided in case of problems or electro-mechanical failure.

If the machine is not provided with the ability to perform all of the necessary operations in one step, some procedures will have to be performed manually.

The Container Handling Machine can also be fabricated with numerous monitoring and assay devices, including video and bar-code readers, that could make surveillance operations more efficient. Power to the machine should be supplied via festooning. The machine should be designed with the option to upgrade to remote operations.

Depending on the confinement approach selected, the machine can be fit with HEPA filters to provide confinement ventilation to a single tube during container handling operations. Basically, this consists of a vacuum cleaner (or as many as may be required) attached to the side of the machine.

E. DOE 6430.1A ANALYSIS

This section briefly describes how the storage configuration and renovation options for the passive air cooling concept complies with the intent of DOE Order 6430.1A. The facility layout alternatives provide for the protection of product/boundary containers both in the storage and operations area. The structure surrounding the storage area will be designed to resist natural phenomena hazards, therefore reducing or eliminating the threats to the drywells and containers and significant breaches in the structure. Similarly, the structural and mechanical systems will be designed to eliminate releases in a design based accident using a combination of mechanical ventilation systems and a hardened structure. The confinement alternatives all eliminate the potential release of harmful material outside of the NMSF should a container be breached.

In any renovation/storage option selected, the facility will be divided into four areas. The first is the Storage Area, which is contained in a secured, hardened structure, with or without confinement ventilation. Product/boundary containers will never be individually handled in this area and will always be protected by a shielding shroud (of Container Handling Machine), basket, and/or a tertiary capsule.

The second area is the Operations Area. This portion houses the change rooms, pack/unpack, staging, NDA labs, and other areas indicated on the floor plans. It is entirely within the MAA (a hardened structure) and has confinement ventilation. Confinement ventilation is required because the product/boundary assemblies are accessed in this area, and could possibly be breached in some DBA's. Monitoring stations, engineered controls and devices, and other measures have been specified in order to prevent contamination.

The Security Station is the third area, albeit rather small in comparison. It is a hardened structure, but does not have confinement ventilation. It is also located outside the MAA, but provides a location from which to control access. It will be designed to meet the requirements of DOE 5632.1C.

The fourth area is that outside the MAA. This houses the entrance, drivers' lounge, and cold mechanical room. There is no possibility of a release in this area.

The storage requirements for Plutonium are specifically addressed in DOE Order 6430.1A. Key sections include Special Facilities Division 1300, and Equipment Division 1100. The selection of an appropriate container is critical to the design of a storage facility, due to decisions regarding handling, placement/retrieval, and accident scenario development. The selection of a storage container and the facility are closely interrelated, and a change in one affects the design of the other.

1) Containment of Potential Release: The use of a sealed capsule surrounding the product/boundary containers, will be designed to accommodate pressure effects; physical handling stresses due to free-fall drop from 125% credible height, fatigue, corrosion, thermal cycling, embrittlement; and accountability. The capsule will prevent the spread of contamination by remaining leak-tight during credible accident scenarios. The other alternatives are HEPA filters in the Charge Hall, or on the Container Handling Machine, which will provide similar confinement capabilities as in the operational area.

   The use of HEPA filters in the operational area will be designed to preclude contamination of the environment should a product/boundary container be breached. The facility will be configured and monitors/alarms provided to eliminate the likelihood of contamination from migrating to outside the immediately affected area. Potential contamination should be controlled as close as possible to handling areas with fume hoods, or similar apparatus, with sufficient capture velocity, to minimize migration. Administrative controls will also be utilized.

2) Criticality/Storage Container Spacing: The design of this facility complies with current container packaging units for all materials proposed for storage. The design of the drywells (and tertiary capsules) will be uniform throughout all storage locations. The variation in storage package envelope, and associated container-to-container stack height, will be accommodated by the use of a spacer/basket which is designed to side into a standard drywell. The spacer/basket will contain a fixture for securing each product/boundary container in a fixed position for insertion into the capsule. The design of the product/boundary container fixtures will use a positive sizing feature to prevent inadvertent spacing of product/boundary containers.

3) Control of Contamination: The use of a sealed capsule prevents the spread of potential contamination from the stored product containers. In order to achieve this control, capsules can only be opened in a designated load/unload section of the HEPA-filtered NMSF Operations Area. Similarly,

contamination within the Charge Hall can also be controlled by HEPA filters. Administrative controls to assure container cleanliness and integrity are required to verify external/internal surface cleanliness, and capsule access hatch gasketing.

4) Material Accountability: The drywells, heavy shielding plugs, metallic storage capsules, and controlled entrances to the Charge Hall all provide a substantial barrier to unauthorized removal of stored materials. The combination of large physical size, unique access hatch sealing design, and the internal basket spacers, present a defense-in-depth approach to storage security; providing an extended period of time for detection. Once a container is sealed, suitable tamper devices may be attached to record entry.

5) Emergency Power/Critical Systems: Emergency power will be supplied via a UPS system to power monitors, lights, and security devices for a discrete amount of time in the case of an accident or interruption of electrical service. The passive storage concept does not require power to provide cooling to the array. Thermal calculations indicate it would take on the order of 1 year for the facility to heat up to 200 deg. F, assuming that all airflow is stopped. Calculations and verification of this conclusion can be found in the new CDR. The **Preliminary Hazard Assessment** (April, 1994), which was based on the solid block concept, indicates that a release is extremely remote. Additionally, the product/boundary containers are designed to withstand significant distresses. Therefore, the facility will not require emergency generators to run a HEPA filtering system. The possibility of overpressuring some rooms, or inducing positive pressure, is eliminated if the HEPA's are shutdown.

F. ADVANTAGES AND DISADVANTAGES

Since a number of confinement and floor plan options are available for the passive air cooled concept, and many combinations are possible, a matrix is the best way to evaluate and list the advantages and disadvantages follows:

G. COST ESTIMATE

A number of combinations of confinement and floor plan options available, and the costs of each combination, as well as other information, is included in the attached tables. The building modification costs were added to the original CDR cost of $6,865,000, to ease comparison, and since most of the work to install a passive cooling concept is additional to that already estimated.

PASSIVE AIR COOLING - STORAGE VAULT AND FLOOR PLAN OPTIONS ADVANTAGES AND DISADVANTAGES

OPTIONS	ADVANTAGES	DISADVANTAGES
CONFINEMENT APPROACHES		
HEPA FILTERED STORAGE HALL	CONVENTIONAL TECHNOLOGY/APPROACH SHIELDING PLUGS WILL BE LESS COMPLEX NO NEED TO BE AIRTIGHT NO AIRLOCK/DECON REQUIRED BETWEEN OPERATIONS AREA AND CHARGE HALL LESS COMPLEX CONTAINER HANDLING MACHINE NO NEED FOR AIRTIGHT SHIELDING VALVES - OPERATIONS ARE MORE SIMPLE THAN IN NON-HEPA FILTERED OPTIONS NO NEED FOR RADIATION MONITORS, ETC.	MORE CFM - WILL INCREASE AMOUNT FLOOR SPACE NEEDED FOR LARGER FILTERS NOT A TOTALLY PASSIVE STORAGE CONCEPT RISK OF CONTAMINATION IN CHARGE HALL BECAUSE HEPAs ARE PROVIDED HAS TO HAVE RADIOLOGICAL CONTROLS AND MONITORS
HEPA FILTERED CONTAINER HANDLING MACHINE	PROVEN TECHNOLOGY (IN SERVICE @ FT. ST. VRAIN) LESS AIR TO FILTER - SMALLER HEPA - RESULTING IN LESS SPACE NEEDED FOR MECHANICAL ROOM REDUCED NEED FOR ANTI-Cs IN CHARGE HALL	COMPLEX EQUIPMENT - EXTRA COST DOE AND LANL RULES & ENGINEERING STANDARDS COULD MAKE IMPLEMENTATION DIFFICULT SHIELD PLUGS WILL HAVE TO BE AIRTIGHT - MAY REQUIRE SEALS/GASKETS/LOCKING MECHANISMS GREATER RISK OF CONTAMINATION IN CHARGE HALL THAN WITH OTHER OPTIONS
NO HEPAs TERTIARY CAPSULES	LESS COMPLEX CONTAINER HANDLING MACHINE SHIELDING IS THE CONCERN, NOT CONTAMINATION MINIMIZE SIZE OF HEPA FILTERS FOR NMSF POSSIBLE CREDITS/EXTENDED INVENTORY FOR MC&A	TERTIARY CAPSULES WILL BE EXPENSIVE AND HAVE TO BE A CAPITAL EXPENSE PLUS REPLACEMENTS MAY BE NEEDED QA/QC & TESTING PROGRAMS WILL HAVE TO BE STARTED - COULD DELAY SCHEDULE
FLOOR PLAN APPROACHES		
FLOOR PLAN NO. 1 - 10 HIGH	SINGLE ROOM ACCESS AND STORAGE SINGLE BRIDGE CRANE AND CONTAINER HANDLING MACHINE MINIMIZE NUMBER OF DRYWELLS & SHIELD PLUGS EXTRACT THE MAXIMUM NUMBER OF CONTAINERS IN A SINGLE PULL CAN BE USED WITH ANY CONFINEMENT OPTION EXTRA FLOOR SPACE ADDED ON MEZZANINE	EXTENSIVE MODIFICATIONS - STRUCTURAL & ARCHITECTURAL WILL BE NEEDED LARGER EQUIPMENT, DRYWELLS, ETC. WILL BE NEEDED. DUE TO LARGER EQUIPMENT, MATERIAL HANDLING ACCIDENT SCENARIOS WILL HAVE TO BE EVALUATED FOR GREATER DROP HEIGHTS, ACCELERATIONS, ETC.

FLOOR PLAN NO. 1 - 6 HIGH	MINIMAL STRUCTURAL MODIFICATIONS TO EXISTING BASEMENT MINIMAL DISRUPTION TO THE FACILITY EFFECTIVE STACK HEIGHT INCREASED - SHOULD ENHANCE THERMAL PERFORMANCE AND PROVIDE EXTRA OPERATING MARGIN.	MORE DRYWELLS, SHIELD PLUGS, ETC. REQUIRED. POSSIBLY REQUIRE 2 OR 3 BRIDGE CRANES OR CONTAINER HANDLING MACHINES DUE TO DIFFERENT WIDTHS OF BAYS POSSIBLY CANNOT BE USED WITH NON-HEPA FILTERED STORAGE HALL BECAUSE NDA LAB, PACK/UNPACK, ETC. WOULD BE ON TOP. HORIZONTAL SEPARATION IS DESIRED BETWEEN NON-HEPA & HEPA FILTERED AREAS

PASSIVE AIR COOLING: CONFINEMENT OPTIONS

STORAGE ARRAY AND SFE COMBINATIONS ESTIMATED COSTS

STORAGE CONFIGURATIONS	HEPA-FILTERED CHARGE HALL	HEPA-FILTERED CONTAINER HANDLING MACHINE	NON-HEPA FILTERED CHARGE HALL -TERTIARY CAPSULE
FLOOR PLAN NO. 1 (10 HIGH)	$4,911,378	$4,931,378	$6,711,378
FLOOR PLAN NO. 2 (6 HIGH)	$7,603,217	$7,623,217	$10,603,217

BUILDING AND STORAGE ARRAY ESTIMATED COSTS

STORAGE CONFIGURATIONS	HEPA-FILTERED CHARGE HALL	HEPA-FILTERED CONTAINER HANDLING MACHINE	NON-HEPA FILTERED CHARGE HALL -TERTIARY CAPSULE
FLOOR PLAN NO. 1 (10 HIGH)	$12,546,825	$12,566,825	$14,346,825
FLOOR PLAN NO. 2 (6 HIGH)	$14,837,932	$14,857,932	$17,837,932

NOTES:

1. SAME CONTAINER HANDLING MACHINE AND EQUIPMENT REQUIRED FOR EACH CONFINEMENT OPTION. HOWEVER, ADD $20,000 FOR HEPA FILTER ON MACHINE.
2. ADDITIONAL COST FOR HEPA FILTERING CHARGE HALL IS NOT SIGNIFICANT. ONLY ADDITIONAL COSTS ARE ADDITIONAL FILTERS. COST OF RELATED HVAC EQUIPMENT WILL REMAIN ABOUT THE SAME.

5. STORAGE OPTION NO. 5: ACTIVE AIR COOLING

A. DESIGN CONCEPT

This concept uses the same principle as the passive cooling concept, but relies on an active system to provide the buoyant effect to remove the air heated by the array from the facility. Fans or blowers would draw air through the array from intake vents at the south end of the building, and exit through a vent on the roof. The product/boundary container assemblies could be stored in a 10 high or 6 high configuration in drywells, supported by a composite steel and concrete deck. Any combination floor plan and confinement variations discussed in the passive concept could be implemented. The deck would physically separate the area above and below the deck, provide shielding, and a surface on which human occupancy is possible for some operations. However, the 10 high configuration was the focus for this option.

There are two variations of this option:

1. HEPA filtered intake and exhaust
2. Non HEPA filtered intake and exhaust.

Obviously, variation 1 will require more complicated and larger equipment to overcome the static pressure of the HEPA filters, plus redundant systems to comply with DOE and LANL requirements. Variation 2 will require smaller fans and equipment than variation 1. In any event, both variations are assumed to required safety class (or at least safety significant) equipment, which require regular maintenance and periodic upgrades. In either case the fans were selected on the basis that no more than approximately 2000 CFM (upper bound) of air is required to cool the system. That volume of air is the same as was used for the natural convection system to cool the array. The primary advantage of an actively driven system is that it provides a greater static pressure capacity. Providing chilled, or conditioned air is not necessary due to the relatively high temperature limits of the material - 149 deg. F.

An actively cooled systems could be required if natural convection system can not be demonstrated to work, or if the configuration of the facility prevents it from functioning. The natural convection system may not work if the losses through the array require a greater static pressure to overcome than is provided. Fans or blowers on an active system can be provided to overcome the resistance. Selection of the HEPA filtered system would be required on the intake and exhaust array cooling streams if the drywells were modified or replaced with a system that did not provide the required confinement and physical protection.

If the active cooling systems were to fail, a finite amount of time would be available to get the systems running again, which would be dependent on how long it would take for the storage array to heat up to the operational limits. That time depends on many factors, but is thought to be on the order of 3 to 6 months, based on current thermal calculations.

B. FACILITY MODIFICATIONS

The same floor plan and renovation options with the passive system can be applied to these actively cooled alternatives, with modifications being confined to the roof over the vault area. The basic operations inside the facility would not be affected. However, the non-HEPA'd and HEPA filtered options would require different equipment. Appendix No. 9 contains schematics of both variations.

NON-HEPA FILTERED OPTION:

The following additions would be required for the non-HEPA filtered, active system:

1. Intakes and ductwork would have to be constructed at one end of the roof over the vault area. Penetrations through the roof and first floor slabs would be made to allow cooling air to enter the bottom portion of the array.

2. A mechanical penthouse would have to be constructed on the roof, over the vault area to accommodate exhaust fans, as well as any other pumps, compressors, or other items. The exhaust fans would pull the cooling air through the array.

3. Two fans (100% capacity each) would be installed. The calculations in the appendix detail size and static pressure requirements.

HEPA FILTERED OPTION:

The following items and additions will be required to operate this system. Note that the HEPA filters for the array cooling air system are separate from the HEPA ventilating the operational areas of the facility. The HEPA filtering system serving the operational area of the NMSF should not be used to cool the array because there is no need to cool or heat the air passing through the array. Using that kind of a system may make it needlessly complicated.

1. A mechanical penthouse on the roof would have to be constructed to house the supply and exhaust fans, as well as associated pumps, compressors, and other equipment. This room would be uncontrolled from a radiological perspective.

2. A radiologically controlled mechanical penthouse will be required to house the HEPA filters and required air sampling mechanisms. Two trains each of intake and exhaust HEPA filters will be installed, each with 100% capacity for redundant capacity. No less than two stages of HEPA filters would be required. This Penthouse would be considered part of the MAA. A security vestibule, 10 ft. square, with appropriate doors and alarms, would also have to be provided for an emergency exit.

3. A stairway would be required to enter the radiologically controlled penthouse from the first floor to minimize contamination problems and control access to the MAA.

C. PROCESS AND MATERIALS FLOW

The same process and materials flow as stated for the Passive Air cooling option would be used. The only real difference between active and passive air cooling is how array cooling is achieved.

D. SPECIAL FACILITIES EQUIPMENT

The same SFE would be provided. In the HEPA filtered cooling air option, drywell might not be required, depending on what the product/boundry containers were stored in. For example, if a basket attached to the underside of the charge deck were to be used. However, a steel pipe drywell is a very convenient means to hold product/boundary containers.

E. DOE 6430.1A ANALYSIS

This section briefly describes how the actively cooled storage configuration and renovation options complies with the intent of DOE Order 6430.1A. The analysis for the operational area is the same as for the passively cooled concept and is not repeated here. The analysis for the array is also similar, but the following exceptions are noted:

1) Containment of Potential Release: The use of HEPA filters for the cooling air stream in the array will preclude any release should the drywells and product/boundary containers be breached.

2) Control of Contamination: The use of a HEPA filters precludes contamination from migrating out of the facility.

3) Emergency Power: Based on the latest thermal analysis (prepared for the passive concept) the facility will take almost 1 year to heat up to an unacceptable temperature. Therefore, emergency power is not required to provide cooling to the array.

E. ADVANTAGES AND DISADVANTAGES

The advantages of the actively cooled system are as follows:

- The cooling air stream can be mechanically controlled.
- An array with a higher resistance coefficient can be installed as compared to the natural convection system, without severely limiting the capacity of the system.
- The fans are relatively simple and inexpensive to maintain and install.

The advantages of the HEPA filtered option are:

- The need for drywells can be eliminated. However, tertiary capsules or sleeves should be used to ease material handling, enhance MC& A, and reduce the probability of accidents.
- Another confinement barrier is added, although not necessary if the drywells are fabricated to NQA-1 standards and designed to satisfy accident criteria.

The disadvantages are:

- Either system is more expensive to install and maintain than the passive air cooled concept.
- Long term, indefinite, passive safe shutdown is not possible due to the need to maintain and operate fans, filters, etc.
- More equipment will be required, more maintenance, and therefore more visits to the building by various maintenance personnel.

G. COST ESTIMATE

The active air concepts were estimated for life-cycle as well as installation costs. The difference between the active and passive options was relatively small in comparison to the cost of the facility - on the order of 1%. Construction costs for the active cooled options are as follows:

Non-HEPA filtered cooling air:	**$12,573,871**
HEPA filtered cooling air:	**$12,870,502**

The additional costs to install the active air cooled system were added directly to the building costs for the original CDR ($6,865,088), since most of the required modifications are additional to that needed for the solid block concept. Detailed estimate data can be found in Appendix No. 10. Cost information on the SFE is in Appendix 12.

Life cycle comparisons (for 25 year periods) were also completed in order to evaluate maintenance and energy costs. The 2 active cases were compared against the passive cooling case (HEPA filtered Charge Hall, 10 high). As a basis of comparison, the total estimated additional building costs were used as a basis.

The results were, in present value dollars are:

	BLDG COSTS	**LIFE CYCLE**
Passive Cooling (10 high):	**$770,359**	**$842,695**
Non-HEPA, active cooling air:	**$797,405**	**$900,332**
HEPA, active cooling air:	**$1,094,036**	**$1,384,636**

Detailed life cycle cost information and supporting data can be found in Appendix No. 11. Based on these results, the Passive option appears to be the most cost effective. The active cooling option without HEPA filtered cooling air is marginally more costly. The supporting data and detailed life-cycle cost analysis are included in the appendix No. 11.

IV CONCLUSIONS AND RECOMMENDATIONS

Based on the data, discussions, and analysis presented here, we recommend that a passive cooled array in a "10 high" configuration, with a HEPA filtered Charge Hall be selected. The concept is more fully developed in the new CDR. It is the most cost effective solution, given the technical constraints and requirements of the project.

The reasons it is the most desirable amongst the renovation alternatives are:

1. It provides centralized storage in a single room, thereby minimizing the quantities of material handling equipment and associated cost.
2. The array can be easily segregated from the rest of the facility.
3. The number of shielding plugs, drywells, and associated spacer/baskets is minimized.
4. The HEPA filtered Charge Hall is less expensive to install and maintain than providing tertiary capsules. It is also more conventional and has a higher probability of implementation.
5. The passive option provides indefinite long term passive safe shutdown.
6. The passive concept requires less equipment and energy consumption than the active or solid block option.
7. It is less expensive than construction of a new facility.

A cost comparison is attached, which lists all of the alternatives and associated costs.

In comparison to the other alternatives, renovating PF-41 is more advantageous because:

1. The no action alternative is not viable. It will not provide the facilities required to support the program and mission, whereas, the passive air cooled concept does.

2. A new facility at TA 55 is more expensive than renovation, although the same or better technical solution could be achieved. Based on a cursory 2cost-benefit-risk analysis, renovation is the better option since there is less analysis, planning, and logistics to be considered. One could also assume, based on past experience, that the cost estimate presented in the following table, will probably increase, and the schedule required would be longer than a renovation.

3. Building a new facility outside TA-55 would be even more complicated than a new building in TA-55 due to site selection and security requirements, as well as operational coordination.

4. The existing vault at TA-41 is too close to the townsite, and in a difficult location to access with large trucks (since it is in the bottom of a canyon). The site also has numerous environmental problems, contaminated groundwater being one. The renovation poses none of these problems.

5. The day vault at TA-55, PF-4 is not a technically or operationally feasible option due to lack of available space and the disruption the modifications would cause to PF-4 operations. The renovation will only cause minor disruptions to the site and should not pose any operational problems for PF-4.

ICF Ka ngineers, Inc.
JOB NO. 41552-056-00

COST COMPARISON: STORAGE OPTIONS

ALT. NO.	ALTERNATIVE DESCRIPTION	BUILDING MODIFICATIONS	STOR. ARRAY & SFE	TOTAL	CONTINGENCY @ 25%	TOTAL W/ CONTINGENCY	COMMENTS
A.	NO ACTION	$0	$0	$0	$0	$0	MAINTAIN STATUS QUO – NO CAPITAL COSTS
B.	BUILD A NEW FACILITY AT TA–55	$17,000,000	$8,000,000	$25,000,000	$6,250,000	$31,250,000	
C.	BUILD A NEW FACILITY OUTSIDE TA–55	$22,000,000	$8,000,000	$30,000,000	$7,500,000	$37,500,000	
D.	USE THE EXISTING VAULT AT TA–41	N/A	N/A	N/A	N/A	N/A	COSTS NOT DEVELOPED
E.	USE THE DAY VAULT AT PF–4	N/A	N/A	N/A	N/A	N/A	COSTS NOT DEVELOPED
F1A.	STACKER RETRIEVER – ACTIVE SHELF COOLING	$6,865,088	$2,938,000	$9,803,088	$2,450,772	$12,253,860	ASSUME SAME BLDG MODS AS MERRICK CDR
F1B.	STACKER RETRIEVER – HEAT PIPE NO.1	$6,865,088	2,945,000	$9,810,088	$2,452,522	$12,262,610	ASSUME SAME BLDG MODS AS MERRICK CDR
F1C.	STACKER RETRIEVER – HEAT PIPE NO.2	$6,865,088	4,039,000	$10,904,088	$2,726,022	$13,630,110	ASSUME SAME BLDG MODS AS MERRICK CDR
F2A.	POOL STORAGE – ACTIVE COOLING	$6,865,088	4,442,000	$11,307,088	$2,826,772	$14,133,860	ASSUME SAME BLDG MODS AS MERRICK CDR ADD BASKETS TO SFE – SEE NOTE 1
F3A.	SOLID BLOCK – LARGE CAST IRON BLOCKS	$6,865,088	5,544,018	$12,409,106	$3,102,277	$15,511,383	ASSUME SAME BLDG MODS AS MERRICK CDR ADD BASKETS TO SFE – SEE NOTE 1
F3B.	SOLID BLOCK – CAST IRON TUBES	$6,865,088	7,676,000	$14,541,088	$3,635,272	$18,176,360	ASSUME SAME BLDG MODS AS MERRICK CDR ADD BASKETS TO SFE – SEE NOTE 1
F3C.	SOLID BLOCK – CONCRETE BLOCKS	$6,865,088	3,575,000	$10,440,088	$2,610,022	$13,050,110	ASSUME SAME BLDG MODS AS MERRICK CDR ADD BASKETS TO SFE – SEE NOTE 1
F4A.	PASSIVE AIR COOLING – 10 HIGH, HEPA CHARGE HALL	7,635,447	4,911,378	$12,546,825	$3,136,706	$15,683,531	
F4B.	PASSIVE AIR COOLING – 10 HIGH NON–HEPA, TERTIARY CAPSULE	7,635,447	6,711,378	$14,346,825	$3,586,706	$17,933,531	
F4C.	PASSIVE AIR COOLING – 10 HIGH, HEPA TUBE MACHINE	7,635,447	4,931,378	$12,566,825	$3,141,706	$15,708,531	
F4D.	PASSIVE AIR COOLING – 6 HIGH, HEPA CHARGE HALL	7,234,715	7,603,217	$14,837,932	$3,709,483	$18,547,415	
F4E.	PASSIVE AIR COOLING – 6 HIGH NON–HEPA, TERTIARY CAPSULE	7,234,715	10,603,217	$17,837,932	$4,459,483	$22,297,415	
F4F.	PASSIVE AIR COOLING – 6 HIGH, HEPA TUBE MACHINE	7,234,715	7,623,217	$14,857,932	$3,714,483	$18,572,415	
F5A.	ACTIVE AIR COOLING – 10 HIGH NON HEPA COOLING AIR	7,662,493	4,911,378	$12,573,871	$3,143,468	$15,717,339	
F5B.	ACTIVE AIR COOLING – 10 HIGH HEPA COOLING AIR	7,959,125	4,911,378	$12,870,503	$3,217,626	$16,088,129	

NOTES:
1. ADDED COST OF CONTAINER BASKETS TO SFE BECAUSE COMPLEX 21 CONTAINER IS NOT AVAILABLE. EXISTING CONTAINERS DO NOT HAVE LIFTING HOOKS OR LUGS. USED $1,000 EA.

APPENDIX NO. 1

CONCEPTUAL DRAWING - NEW FACILITY

Page left intentionally blank.

APPENDIX NO. 2

CONCEPTUAL ESTIMATE DATA- NEW FACILITY

IC ER ENGINEERS, INC.
JOB NO. 52-056-00

24-M

CONCEPTUAL ESTIMATE

PASSIVE COOLING
NEW FACILITY AT TA 55

FUNCTION	FLOOR AREA (SF)	HEIGHT, FT. (CEILING/ROOF)	SQUARE FOOT COST INTERIORT (SEE NOTE)	COST OF EXTERIOR SHELL REINF CONCRETE	EXCAVATION AND SITEWORK	TOTAL EST. COST
TRUCK LOADING AND UNLOADING	4300	10	$989,000	$360,000	$2,500	$1,351,500
SUPPORT AREA - 1ST FLOOR	2300	10	$529,000	$240,000	$0	$769,000
MECHANICAL ROOM - 1ST FLOOR	4000	10	$920,000	$262,500	$2,500	$1,185,000
NDA LAB, PACK/UNPACK, STAGING (BASEMENT)	5000	10	$1,150,000	$337,500	$40,000	$1,527,500
STORAGE ARRAY / CHARGE HALL	11000	65	$2,530,000	$4,425,000	$150,000	$7,105,000
MISCELLANEOUS AREAS	5000	10	$1,150,000	$750,000	$5,000	$1,905,000
SITE SECURITY CONSTRUCTION (ESTIMATED FOR NEW SITE AT TA 55)					3,000,000	$3,000,000
SUBTOTAL - FACILITIES	31,600		$7,268,000	$6,375,000	$3,200,000	$16,843,000
ADD:						
SPECIAL FACILITIES EQUIPMENT (SFE)						$8,000,000
TOTAL FACITLIES AND SFE						$24,843,000

USE	$25,000,000

1. ESTIMATED UNIT COST OF INTERIOR CONSTRUCTION DERIVED FROM ORIGINAL CDR. TOTAL CONSTRUCTION COST OF RENOVATED FACILITY IS $6,900,000 (NOT INCLUDING SFE) - 31,000 SF. UNIT COST OF $230 PER SQUARE FOOT

2. ASSUME SFE COST OF $8,000,000 FOR PASSIVE AIR *COOLED FACILITY*. SIMILAR TO ALTERNATIVE F.4.A IN TABLE AT CONCLUSION OF STUDY.

2. ALL COSTS ARE BASED ON UNBURDENED TPC SUMMARY IN ORGINAL CDR. COSTS INCLUDE CONTRACTOR PROFIT, OH, ETC.

IC[illegible]SER ENGINEERS, INC.
JOB NO. 4[illegible]52-056-00

24-May-95

ESTIMATED QUANITITIES

FUNCTION	FLOOR AREA (SF) DIMENSIONS (L x W x H)	CUBIC YARDS CONCRETE SHELL	CUBIC YARDS OF EXCAVATION
TRUCK LOADING AND UNLOADING	4,300		
FLOOR (8" TK)	85 x 50 x 20		250
WALLS (12" TK)		110	
ROOF (12" TK)		200	
		170	
SUPPORT AREA – 1ST FLOOR	2,300		
FLOOR (8" TK)	65 x 35 x 10		0
WALLS (12" TK)		60	
ROOF (12" TK)		170	
		90	
MECHANICAL ROOM – 1ST FLOOR	4,000		
FLOOR (8" TK)	80 x 50 x 10		250
WALLS (12" TK)		100	
ROOF (12" TK)		100	
		150	
NDA LAB, PACK/UNPACK, STAGING	5,000		
(BASEMENT)	100 x 50 x 10		4,000
FLOOR (18" TK MAT FDN)			
WALLS (12" TK)		280	
ROOF (12" TK)		170	
		0	
STORAGE ARRAY / CHARGE HALL	11,000		
FLOOR (18" TK)	115 x 90 x 65		15,000
EXTERIOR WALLS (24" TK)		600	
ROOF (18" TK)		2,100	
INTERIOR WALLS (24" TK)		600	
STACK (18" TK)		1,500	
		1,100	
SITE SECURITY WORK			
1500 LF OF PIDAS, FENCING, ETC.			
AT $1200/LF			
MISCELLANEOUS	5,000	1,000	500
SUBTOTAL QUANTITIES	31,600	8,500	20,000
UNIT PRICES		$750	$10
ADD:			
SITE SECURITY WORK			
1500 LF OF PIDAS, FENCING, ETC.			
AT $1200/LF			
			3,000,000
ESTIMATED TOTAL COST		$6,375,000	$3,200,000

NOTES:
1. UNIT COST OF CONCRETE BASED ON AVG COST OF $500 PER CY IN MEANS, 1995 FOR VARIOUS TYPES OF CONSTRUCTION. ADDED $250 PER CY TO ACCOUNT FOR LOCATION AND ASSUMED RESULTING PRODUCTIVITY LOSSES
2. SITEWORK INCLUDES COST OF EXCAVATION, SHORING, AND UTILITIES. MEANS ASSEMBLIES COST DATA (1995) GIVES A UNIT PRICE OF APPX. $5.00 PER CY. ADDED $5.00 FOR UTILITIES, UNKNOWNS, ETC.
3. FROM ORIGINAL CDR ESTIMATE, 700 LF OF PIDAS COSTS $802,000 TO INSTALL; UNIT PRICE OF $1200/LF.
4. ALL COSTS ARE BASED ON UNBURDENED TPC SUMMARY IN ORGINAL CDR. COSTS INCLUDE CONTRACTOR PROFIT, OH, ETC.

APPENDIX NO. 3

MERRICK STORAGE OPTIONS STUDY

STORAGE METHODS OPTIONS FOR THE NUCLEAR MATERIALS STORAGE FACILITY

Prepared by

Merrick & Company
600 Sixth Street, Suite 106
Los Alamos, NM 87544

Prepared for

Los Alamos National Laboratory
Los Alamos, New Mexico

November 1993

This document is dated November 1993. The intent of the inclusion of this document into the Conceptual Design Report is to show the original storage options considered as part of the project conceptual design development. The contents of this study are based upon project information obtained from August - November 1993, including preliminary storage options studies for Complex 21.

On November 22, 1993, a formal presentation of the options included within this report was made to DOE-AL, DOE-LAAO, and LANL personnel (attendance attached). At this meeting, consensus was reached that the Conceptual Design would continue further development and evaluation of the solid block storage options, based upon this option's feasibility, applicability to DOE Orders and requirements, safe operations, and conservative costing and scheduling requirements. Another project review was held on December 15, 1994 with DOE-HQ, DOE-AL, DOE-LAAO, and LANL personnel (attendance attached). Discussions again centered on further development of the solid block option as part of the scope of work of the Conceptual Design Report.

NUCLEAR MATERIALS STORAGE FACILITY

STORAGE CONCEPT DECISION

NOVEMBER 22, 1993

Name	Organization	Phone	MS	Fax
KIRK ELLARD	LANL/ENG-DO	667-5711	M711	- 1426
Carolyn Zerkle	LANL/ENG·MPO	667·5112	M711	7·142
Paul Smith	Merrick	662-0606	M703	2-3295
DEREK GORDON	LANL NMT·8	667-5646	E583	5-27
Bill Maraman	LANL "	667 5646	E583	"
AL GONZALES	PMA/AL	845-4259		
IVAN ROSE	PMD/AL	845-4195		5-54
GEORGE WERKEMA	WQD/AL	845-6736		845-4722
Armando Chavez	PMB/LAAO	665-5914		665-487
WAYNE RANCHER	SNSD/AL	845-5115		845-435
Rick Bolig	LANL/HS-3	665-5213	K489	
BILL RISLEY	SNS/LAAO	5-5937	A-316	
Scott Salem	DOE/LAAO/ES&H	665-8774	A316	
MICHAEL EBBERS	DAMES & MOORE	884-2611		
JOHN SALMONSON	AL/SPD	845-6363		
Dennis Brandt	LANL/NMT-4	667-8486	E513	665-116
DIANA SENA	LANL/NMT-4	667-8142	E513	
Audrey Martinez	LANL/NMT	665-2713	F628	665-181
JOHN RONQUILLO	ICF KAISER ENG	661-5268	M703	
W.D. McNeese	LANL NMT 8	667-5646	E583	
R.H. Rochester	Merrick	662-0606	M703	2-3
Harry Christensen	LANL/MPO	665-1248	6745	5-23
Victoria L Longmire	LANL/NMT-4	665-8036	E501	5-66
Lee Le-Doux	DOE/AL/PMD	505-845-5247		5-54

NMSF Review

December 15, 1993

			fax
KIRK ELLARD	LANL	(505)667-5711	-1426
Armando Chavez	DOE/LAAO	665-5914	
Tom RUSH	DOE/LAAO	667-5280	5-5405
Dick Rochester	Merrick	662-2194	2-3158
Chuck Miller	DOE/AL/SPD	845-4172	5-6431
WAYNE RANCHER	DOE/AL/SNSD	845-5115	5-4355
Ivan Rose	DOE/AL/PMD	845-4195	5-5439
Victoria Longmire	LANL	665-8036	5-6061
Carolyn E. Yerkle	LANL/FSS	667.5712	7.1426
Roger Dintaman	DOE/DP-652	301-903-4142	X6628
Corey Cruz	DOE/AL/WQD	(505)845-4282	-472
LOUIS WILLETT	DOE-HQ DP-27	(301) 903-5670	-862
Bob Hamby	DOE/HQ/DP-662	(301)903-3607	-254
Bob McMARTIN	Dames & Moore	(505)884-2611	888-193
MICHAEL EBBERS	DAMES & MOORE	505-884-2611	888-193
Scott Salisbury	LANL	505-667-7819	665-219
DEREK GORDON	LANL/NMT-8	505 667-5646	5-272
Wilbur D. McNeese	LANL/NMT-8 Cons	505-667-5646	5-272
Leroy Martinez	LANL/ENG-3	505-667-2257	667-119
PAT TRUJILLO	LANL/OS-10	665-3431	
Rick Bolig	LANL/HS-3	(505)665-5213	665-17
Jack Ellvinger	LANL/EM-8	667-0633	
Juan Corpion	LANL/EM-8	665-0455	667-52
Tom Brown	LANL/HS-12	(505)665-4846	667-97
GERALD SCHLAPPER	LANL/HS-12	505-665-7591	667-97
H.L. "JODY" PLUM	SUENTECH (DOE/LAAO)	665-5042	665-504

XECUTIVE SUMMARY

Special Nuclear Material (SNM) storage methods that could be implemented in the Nuclear Material Storage Facility (NMSF) at Los Alamos National Laboratory (LANL) have been studied. The report investigates the criteria that should be satisfied by the storage methods, issues regarding the design of the storage container that affect the storage method, general descriptions of the storage method concepts, descriptions of the application of each of the methods to the NMSF, advantage/disadvantage analysis for each method application, cost estimates for application in the NMSF, and a recommended method upon which the NMSF upgrade Conceptual Design Report can be based.

The criteria are separated into two types, those that can be considered definite and those that are evolving and remain uncertain at this time. The key criteria that limit the design options are that the specified storage capacity of the facility must be accommodated and that the stored material temperature must be kept below 60°C. The facility is to store a wide range of material types and forms. Therefore, flexibility is an important issue. The criteria that are uncertain pertain to security criteria which translate to inventory verification requirements, safety criteria regarding the role of the storage method in establishing safety class barriers to release of nuclear material, and the impact of RCRA on the storage method.

Three concepts that can accommodate the definitive criteria when applied to the NMSF are escribed. These are:

Shelf Storage With A Stacker-Retriever Warehouse System

This system would store material in shield modules located on a shelving system. The shelves act as heat collection plates. The shelf cooling can be accomplished either with a circulating chilled water system or by connection to heat pipes. The handling of stored items is accomplished with the stacker-retriever that has been installed in the NMSF. A modification to the stacker-retriever may be needed.

Pool Storage

This method would store containers stacked inside vertical tubes that would be immersed in a water bath. A gantry robot moving above the pool would pull or place the containers. Cooling can be provided by a circulating chilled water loop or by heat pipes. The heat capacity of this system is large so that a period of a few weeks passive shutdown of the active cooling system can occur before the maximum temperature limit is approached. This limitation would not exist if heat pipes were installed.

Solid Block Storage

This method is similar to the pool storage method except that the water is replaced with iron that has imbedded water cooling lines. Cooling would be provided with circulating chilled water. The heat capacity of the system is large so that a few weeks of passive shutdown can occur before the chilled water system must be restarted.

The technical advantages/disadvantages comparison finds that the stacker-retriever method is the least advantageous because the limited manipulation capability of the stacker-retriever precludes implementing automated inventory surveillance procedures or automated RCRA inspections procedures if required in the future. The other two methods which employ a gantry robot are preferred. The solid block method is somewhat favored over the pool storage. Its long term (50 year) reliability is considered to be higher because it cannot develop a leak of consequence.

The cost estimate results are:

Shelves/Stacker-Retriever Active Cooling	$ 2,938,000	Stacker
Shelves/Stacker-Retriever Heat Pipes	$ 2,945,000 to 4,039,000 ***	
Pool With Gantry Robot Active Cooling	$ 3,842,000	Pool
Block With Gantry Robot Large Blocks, Side Entrance Active Cooling	$ 5,011,000	Blocks
Block With Gantry Robot Cast Tubes, Top Entrance Active Cooling	$ 7,012,000	

*** The range reflects two different heat pipe methods.

These estimates include materials and shipping, installation labor, ED&I, and a 30% contingency.

XECUTIVE SUMMARY

The cost estimates show that the shelves/stacker-retriever options are the least expensive, however they provide the least flexibility and protection.

The conclusion is that the shelving/stacker-retriever options offer the least technical benefit and are the least expensive. The water pool with a gantry robot provides more efficient capability at the median cost. The large steel block option is the most robust and is the most expensive. It would appear that the cost/benefit ratio is approximately equal for these options. The pool option is considered to be a reasonable selection, but the solid block option is the recommended selection because its ruggedness offers the least risk to successful long term operation of the facility.

1 INTRODUCTION

This report has two purposes. The first is to describe storage method options and the complex issues that must be understood in order to make a selection of the storage method. The second is to apply the methods to the NMSF at LANL, which is an existing (non-operational) facility.

The central feature of an SNM storage facility is the storage method. For the purposes of this report the storage method includes:

- the primary SNM container
- the secondary SNM container
- the hardware that defines the array of stored containers
- the medium in which the containers are immersed
- radiation shielding and neutron absorbers
- the automated equipment that accesses array sites and places and retrieves containers
- the decay heat management system

Each of these features plays a role in determining the storage density and the capacity of the vault. The balance of the plant supports the storage method with a facility structure, ventilation, and services, as well as providing security.

CRITERIA FOR A CONCEPTUAL SNM STORAGE FACILITY

2.1 DEFINITIVE CRITERIA

During the NMSF evaluation process the program and design team participants have arrived at a consensus that the following criteria should be applied to the design of an SNM storage facility.

Elements and Isotopes Being Stored

The materials to be stored are metal, oxide, and stable residue forms of ^{239}Pu, ^{238}Pu, ^{242}Pu, ^{237}Np, ^{235}U, Normal U, Depleted U, ^{233}U, ^{241}Am, ^{243}Am, Cm, Cf, and Th. The definition of a stable residue remains to be determined.

Weapon Components

Weapon components may be stored. They will be stored so that their diamond stamp remains valid. This means that the maximum surface temperature of the weapon component shall not exceed 60°C at any time during its storage including during facility upset conditions.

Storage Duration

The storage is long term. The design duration should be 50 years, but the design should not have a built in lifetime limitation that cannot be addressed by a reprocessing program (such as container replacement).

Flexibility

The flexibility of the facility should be maximized because the relative abundances of the allowable material types and forms is not known and may change throughout the lifetime of the facility. Flexibility can be achieved by assuring that all storage locations are identical and that the external envelope of all containers are identical, as well as over designing key elements such as the decay heat rejection systems.

Container Quantity Limits

The maximum quantity of material that can be stored in a container is determined by criticality analysis and the decay heat power limitation required to satisfy the maximum component temperature requirement.

0 CRITERIA FOR A CONCEPTUAL SNM STORAGE FACILITY

Container Design

The storage container outer envelope should be the same as planned for the Complex 21 facilities.

Criticality

The storage array shall assure that a sub-critical condition is maintained. The sub-critical condition may be achieved by a combination of geometry definition and the use of neutron absorbing materials.

Placement/Retrieval of Stored Items

Access to the storage array shall be accomplished with an automated system that is capable of locating a specific site in the array and placing or retrieving the container located at that site. The automated equipment should be directly interfaced to the material accountability system. Provision should be made to retract the material handling equipment from the storage vault room for maintenance and repair activities.

Radiation Shielding

The storage method should contain sufficient shielding to assure that the vault is "cold". Cold is understood to mean that reasonable man entry duration for maintenance or repair can be made, that normal personnel exposures in the facility surrounding the storage vault are ALARA, and that radiation levels are low enough within the vault that they do not interfere with NDA measurements that are used for inventory surveillance.

Response to Design Basis Accidents

The safety related aspects of the storage method must remain functional during and after loss of power incidents, earthquakes, and fires. Additionally, the stored material temperature shall remain below the weapon component temperature limit for a period of time that is judged sufficient to allow for a recovery operation. The temperature limitation is not a safety limitation. The safety limit for the facility will be determined by the temperature gradient that cracks the facility walls. The safe shutdown condition shall be achieved passively (without the application of electrical power).

2.2 UNCERTAIN CRITERIA

During the NMSF evaluation process the participants have recognized that important criteria will be defined by the following issues. However, too much uncertainty exists at this time to define these criteria in a way that a general consensus of participants can be achieved.

Security Criteria

Requirements of the DOE 5630 series shall be met. The security issues that affect the storage method can be categorized as access limitation issues and inventory surveillance issues. These are interrelated because the more access allowed, the greater the surveillance activities required to verify the integrity of the stored inventory. Some storage methods allow more access than others, and some make surveillance easier than others. Surveillance activities require routinely pulling a sample from the inventory, inspecting the containers, and verifying that they have not deformed or been opened, verifying a neutron signal from a subset of the sample, and performing full NDA on a subset of the sample. The surveillance activity can have a significant impact on the material handling equipment, the NDA equipment, and the staff work load. Furthermore the surveillance activity can be counterproductive by creating access to the vault room. In principle, the storage method design should get credit for minimizing access so that retrieval for verification is minimized. On the other hand, if surveillance credit is not forthcoming, or it is inconsequential, then implementation of storage method features for the purpose of reducing surveillance activities is a wasted effort and expense. The design team has been unable to obtain clear guidance on this key issue.

The design team has also been unable to ascertain the extent to which we will be allowed to take credit for remote or in-place verification. The traditional means of performing a vault inventory verification is to pull a sample of stored items; visually (and manually) verify the container condition, seals, and labels; place (manually) a subset into a neutron counter located in a shielded area outside the vault to obtain a verification signal; take a subset to the NDA laboratory for calorimetry and gamma-isotopics measurements. This process involves a lot of handling, radiation exposure, access, and presence of material outside the storage vault room. At the other extreme some of the storage methods considered below could support an automated procedure that never brings the containers out of the storage vault room and, therefore, never allows for personnel access to material as a result of inventory verification activities. Continuous inventory procedures could be programmed into the automation system. Such an advanced scheme would clearly require remote sensing and data collection to replace manual verification activities currently in use, which would cascade to consideration of methods to assure that data were secure and unaltered. Clear guidance on rules or considerations for implementing remote observation or continuous inventory procedures is not available at this time.

Can The Storage Method Provide Sufficient Resistance to DBAs to Allow For a Simpler, Less Expensive, Implementation of Safety Related Systems than is Normally Found in a Nuclear Process Facility?

The motivation for asking this question is that some storage methods may provide a degree of confinement that is sufficiently reliable that a release of consequence outside of the storage containers or the storage array as a result of all DBAs is not credible. If this can be adequately shown through safety analysis, then the requirements of DOE 6430.1A would be met and the facility HVAC system and the storage facility structure would not perform a public protection function. These would then be much simpler and less expensive features of the facility. Typically these features cost a number of millions of dollars so that investment in the storage method could result in a net savings for constructing the facility.

In order to fully answer this question, one must investigate the material which is present outside of the storage array. It is important to minimize the quantity of this material and it is important to understand the consequences of credible accidents that could affect it. One important aspect of minimizing the amount of material present in the facility outside of the storage array is to minimize the surveillance activities that require removal from the safe secure spot in the array (see the security criteria discussion above and the RCRA discussion below). A second technique that can be used is to harden the primary and secondary containers to a point where they cannot be credibly ruptured. This may not be difficult to achieve for the following reason. When fully loaded the storage facility will hold on the order of 10,000 containers. The primary container would probably be designed to achieve a 90% certainty that no primary container failures occurred during the design life of 50 years. Thus, the primary container failure probability arising while in storage would be less than 5×10^{-6}. The secondary container would also have a similar probability of failure so the likelihood of a release would be less than 10^{-11}. It is reasonably likely that the container designs will be sufficiently robust that a release as a result of a handling error (dropped container) which is not accounted for in this argument will also turn out to be incredible. A third technique would be to isolate the relatively small portion of the facility consisting of the incoming shipment storage, the unpacking operation, and the NDA laboratory from the storage vault facility. This small facility which would hold all the in-process containers could then be treated as a small nuclear process facility where the structure and ventilation system work as the ultimate public protection barrier.

Given the conceptual stage of the project and the disparity between the time anticipated to perform and accept a detailed safety analysis and the CDR deadline, the design team has proceeded on the conservative assumption that there will always be a credible accident resulting in a single container release. We have not investigated or attempted to define criteria that would allow the storage method to perform the public protection function.

Resource Conservation Recovery Act (RCRA)

The storage of stable residues may imply that the storage facility will perform a function governed by RCRA. Long term storage of residues which are by-products of end product manufacturing could be understood to mean that there is no clear intent to put the material in the residue back into the production cycle. This argument concludes that these residues are actually waste and are, therefore, subject to RCRA storage requirements.

If the argument in the paragraph above is accepted, then a RCRA permit would be required and there are very complex criteria that must be applied to the storage method. For example, a weekly inspection of all containers to determine container integrity is required, or the project at a very early stage must negotiate an acceptable alternative with the State of New Mexico and then design accordingly.

The importance of this requirement is illustrated as follows. All of the storage options (described below) that have been considered that are consistent with the definitive criteria given in section 2.1 involve closely packing the containers and imbedding them in material that performs the dual function of providing radiation shielding and acting as a heat sink and heat transfer medium. Most of the containers are not visible.

The addition of the programmatic requirement to store RCRA materials is a recent development. It is unclear what kind of an inspection agreement or waiver can be negotiated nor do we have any way to assess the criteria that will be imposed on the storage method. It is inevitable that some of the possible storage methods options will be better able to support the ultimate RCRA criteria than others.

STORAGE CONTAINER SYSTEM DESIGN ISSUES

The container system should be designed with the following considerations:

- There must be two kinds of primary containers. One will be the encasement for weapon components. The other will be a container for holding SNM metal, oxide, and stable residues. The envelope for the SNM primary container is specified in Complex 21 documentation..
- A secondary container is required for weapon components. This container serves the multiple purposes of providing a second containment layer, offering protection during shipment, and providing a security barrier.
- The envelope for the secondary container is specified in Complex 21 documentation. It is much larger than the SNM primary container. If all storage locations in the array are to be the same to assure maximum flexibility of the facility, then a fixture of some sort must added to the SNM primary container so that the effective diameter and height are the same as the secondary container. This fixture may as well be the same secondary container.
- Features are required inside the secondary container to hold the primary container.
- Features are required on the exterior of the secondary container for material handling equipment interface purposes.
- The heat transfer resistance in the container is important. The resistance determines the temperature drop between the primary container surface and the outer surface of the secondary temperature, which is essentially the storage medium temperature. If the temperature drop is large because of a high resistance then it will not be possible to hold the medium at a normal room temperature. In which case, the heat rejection system becomes very complex and expensive because it must be designed with a reliability comparable to a safety class system. In general, the lower the resistance, the higher the maximum allowable temperature of the storage medium. The material in the annular space between the primary and secondary containers should be chosen to minimize the thermal resistance, thereby maximizing the allowable temperature of the storage medium.
- The container system must allow for NDA measurements. This requirement means that either the SNM primary container must be removed from the secondary container for the calorimetry measurements or large bore calorimeters must be developed.
- The design must be rugged to assure that no storage container will fail during the design lifetime of the facility. It must be designed to withstand pressure buildup

that might result from imperfectly calcined oxide, radiation damage, and handling accidents that could occur.

For the purposes of proceeding with the NMSF conceptual design the team has agreed that the container system will consist of a Complex 21 primary container held within a Complex 21 secondary container. The annular space will be filled with helium in order to achieve the lowest heat transfer resistance available with an inert gas. An analysis was performed assuming that a water filled shield module filled the annular space. This analysis showed that the resistance was about 50 times smaller than that achieved using helium and the allowable passive shutdown durations presented below would be approximately doubled. Similar or better results would be achieved if the space were filled with aluminum. Further discussions regarding this aspect of the storage method design should be held as part of the Complex 21 planning.

1 STORAGE CONCEPT DESCRIPTIONS

Three basic storage concepts have been considered. Additionally a number of variations of each of the three have been considered as well. These concepts are described in this section.

4.1 SHELF STORAGE/CONVENTIONAL COMMERCIAL STACKER-RETRIEVER WAREHOUSE SYSTEM

The storage vault room would be a tall, long, narrow room. Shelving units would cover both long walls from floor to ceiling leaving an aisle on the centerline of the room. Containers and shielding would be placed on the shelving unit trays. It is practical, given the container size and a conservative criticality spacing estimate of 18 in, to make the shelves deep enough to hold three containers. Thus the shelves will be about 54 in deep. The aisle in the center must be somewhat wider to allow the stacker-retriever to pull a tray containing all three containers simultaneously and also to allow for clearance as the loaded stacker-retriever moves to the end of the room where the storage I/O station will be located.

This system is similar to the one that was originally installed in the NMSF. Thermal modeling and experiments performed with a full scale storage shelf section and heaters representing stored material have shown that this system is severely limited by its ability to reject heat. Only about 20% of the potential storage sites can be filled if the component maximum temperature limit is to be maintained. This is because the majority of the heat transferred from a container drives convection in the air which carries the heat to the container above. Horizontal airflow through the stack of shelves is small and the room geometry would require supply into the middle of the room and exhaust into plena covering both outside walls. This airflow configuration would be difficult to achieve.

There are two alternatives for providing radiation shielding for this option. Radiation shielding can be built into the secondary container or a shield module can be built into each shelf. If the shielding is built into the secondary container, the heat transfer problem is somewhat improved because the thermal resistance in the container is reduced. If the shielding is built into the shelf the problem is exacerbated because the horizontal airflow will be further reduced.

A heat rejection system can be added to collect and remove the decay heat so that all potential sites can be filled. Two methods appear to be viable.

4.1.1 Active Shelf Cooling

The conventional stacker-retriever shelving system contains trays that rest in angle iron guides. The stacker-retriever inserts a chainveyor between a pair of trays, raises the tray a small amount, and then drives the chainveyor to pull the tray onto the forklift-like vehicle that moves on tracks in the center aisle. There are no fixed shelves in the shelving system. This system can be modified so that the shelving unit does contain fixed shelves at every storage elevation. A tray would rest on each shelf. The tray would have an angle iron flange at the top so that the stacker-retriever chainveyor would fit under the top flange. Each of the shelves can be fitted with cooling coils so that they become chill plates which collect the heat from the tray below. Chilled water supply and return manifold lines would run along the wall behind each storage layer. Branches would run from the manifolds through the cooling loops attached to the shelves at each location.

The shielding can be a useful item in the thermal design. The tray will be a rectangular stainless steel water tank which will have three vertical tubes on the centerline where the containers will be placed. The use of hydrogenous materials other than water is not recommended because they have poorer thermal properties. Given the criticality spacing estimate and the Complex 21 container envelope dimensions the trays will be 18 in wide by 21 in tall by 54 in deep. The tubes will be about 14 in diameter. The water tank when full with three containers will weigh about 1200 lb. Once this water tank is placed on the shelf it can be chilled so that it provides significant heat capacity to mitigate loss of power events. If the facility is built underground, it makes sense to operate with a storage temperature in equilibrium with the ground (about 13°C). If power is lost the large heat capacity of the shielding tanks will mean that the temperature rise is slow so that an approximate adiabatic transfer through the facility wall into the soil can occur. The result will be that a large heat sink will be acting and the time required to approach the temperature which is critical to stored weapon components will be long. It is estimated that this time will be a few days to a week. Thus loss of power events, as long as they are not catastrophic, pose no significant impact on the facility. Long term passive shutdown where weapon component certification is maintained is not supported by this option. However, it is probable that detailed analysis will show that the safety limit defined by cracking the facility walls will not be reached during a passive shutdown.

The placement of shield tanks on every shelf creates a large load on the storage rack members should an earthquake occur. Therefore, the rack members will be substantial structural members and the connections to the facility structure will be a significant issue when evaluating the structural design of the facility.

It is recommended that the design be made robust by including dual full capacity chillers and a standby generator/power system.

4.1.2 Passive Shelf Cooling

No. ! !

This method is the same as described above except that the bottom of the shelf is connected to the evaporator end of a heat pipe. The heat pipes pass through the facility wall into a buried concrete block. The condenser end of the heat pipe then discharges heat into the block and the earth. The storage facility needs to be underground for this scheme since a slight upward slope is desirable so that gravity assists the return of the condensate to the evaporator end of the heat pipe. A study has demonstrated that reasonable size, commercially available, heat pipes can keep the shelf temperatures within a few degrees of the heat sink temperature. Other heat sink alternatives include a pond or heat exchanger panels on the exterior of the building. This method supports an indefinite period of passive shutdown.

4.2 POOL STORAGE

This method is analogous to under water storage of spent reactor fuel.

A large stainless steel rectangular tank would be constructed within an underground concrete room. The tank would contain dividers that would create sections so that a leak would affect a limited portion of the storage. The tank would be tied to the concrete structure to obtain the required resistance to earthquake loads. The room surfaces would also be lined with all welded stainless steel to create a secondary tank. Leak detection provision would be made in the interstitial space. If an inner tank section leaked the outer tank would be good for many years so that provision could be made to unload the bad tank section, drain it, and make repairs. The tank might be of the order of 15 ft deep by 20 ft across by 150 ft long. A deck would be located above the tank. This deck would have holes on approximately 18 in centers. There would be about 1300 holes for the example tank dimensions. A sealed tube (approximately 14 in diameter by 14 1/2 ft long) with a top flange would be lowered into each hole and bolted to the deck plate. Containers would be stacked in the tubes. Each tube would hold 8 containers in this example so that the capacity of the example tank would be 10,400 containers. A hardened "barn" would be built above the tank. The barn would contain a gantry robot capable of accessing each storage tube. The tubes could contain a basket within which the containers would be held so that the robot would pull an entire stack.

The water provides the radiation shielding and also a storage medium with good thermal properties.

Cooling can be provided by means of an active chiller system that circulates the pool water or by heat pipes immersed in the water. These systems would be similar to the ones described in sections 4.1.1 and 4.1.2. The large volume of water has a large heat capacity so that if it is chilled to equilibrium with the earth, it will take about three weeks to reach the critical point for the weapon component diamond stamp. This time period estimate assumes a linear temperature rise and that equilibrium is not approached. In fact, this is probably not the case and the time period is much longer if not infinite. The active system option supports a passive shutdown for a few weeks while maintaining weapon component certification. The heat pipe option supports an indefinite period of passive shutdown.

4.3 SOLID BLOCK STORAGE

The solid block concept is similar to the water tank concept except that the water is replaced by a solid - metal or concrete. In effect the block is a large "engine block." The solid is cast with approximately 14 in diameter cylindrical holes on about 18 in centers. Water cooling lines or heat pipes are imbedded in the solid block to collect the heat. The desirable properties of the solid are:

- It should be a good radiation shield.
- It should have a low heat transfer resistance so that heat is readily transferred to the cooling system and so that heat is uniformally distributed when the cooling system is not functioning.
- It should have a large heat capacity so that the allowable passive duration is long.

Iron proves to be a material that meets these requirements. While concrete would be easy to construct, its heat transfer resistance is much higher. One of the uranium storage facilities concepts being considered by the Complex 21 development team employs the same principle using concrete.

The concept is that an underground vault room would be constructed. A modular cast iron "engine block" would be placed in the vault room. No special structural considerations would be required other than assuring that the floor could accept the load. The analysis described below for application in the NMSF found that the load would be 3300 psf and the existing floor is rated for 3800 psf. Ratings to

8,000 psf can be achieved in Los Alamos. The containers would be placed and retrieved using a gantry robot as described for the water tank option.

Construction could be accomplished by one of two similar methods. First each storage location can be thought of as an individual iron tube that would be 18 in square with a 14 in diameter hole on its axis. For the example dimensions used in the water storage section there would be 1300 of these tubes. Each tube would weigh a little more than 7 tons. A crane would lower the tubes into the vault before the barn was constructed. The tubes would be held together with tie rods. A normal truck could carry two tubes so about 650 truck trips would be required. Three tubes could fit within a normal truck load limit if the block were 14 ft tall. The other choice is to cast blocks with multiple holes. For these dimensions two holes could be achieved in a block. This would reduce the number of castings and the number of blocks being installed. It would mean that the individual block weight would be between 15 and 20 tons which could increase handling problems at the site and slow the block placement.

The heat capacity of the block is about 80% of the water pool option. Therefore, the passive period that can occur before the weapon certification limit is reached is a few weeks.

0 APPLICATION OF STORAGE METHODS OPTIONS TO THE NMSF

Any of the methods described in section 4.0 can be implemented in the NMSF. All are capable of accommodating the specified storage capacity and of managing the specified decay heat power. All meet the requirements of the definitive criteria set out in section 2.1.

5.1 SHELF STORAGE WITH A STACKER-RETRIEVER

The NMSF has two storage vault rooms on the basement level. These rooms are about 13 1/2 ft wide by 120 ft long by 18 ft tall. A conventional warehouse rack and tray stacker-retriever system was installed in each of these rooms. As described in section 4.1, the existing system can only accommodate about 20% of the specified decay heat power. It does not contain shielding. Lastly the structure has inappropriate spacing for the planned containers, as well as lacking the structural strength to carry shielding. The existing shelving system would be removed and replaced with a system like the ones described in sections 4.1.1 or 4.1.2. The existing stacker-retriever load capacity is about 1/2 the estimated weight of the shield tank. The existing stacker-retriever can be used by constructing three smaller tanks (18 in deep) each with a single container capacity to take the place of the 54 in deep tank, and by modifying the stacker-retriever so that it can pull the front container, set it aside, then pull the second one, and so forth.

5.1.1 Active Shelf Cooling

Implementation of the active cooling method described in section 4.1.1 would be straightforward. A pair of 30 ton chillers would be installed in the mechanical room. All plumbing would be within the hardened structure. A standby generator is recommended to serve this system so that the passive shutdown duration can be minimized.

5.1.2 Passive Shelf Cooling

Implementation of heat pipes is less straightforward. The heat sinks for the heat pipes would be concrete blocks 50 ft long by 6 ft tall by 1 ft thick. These would be buried in trenches beside the building. It is estimated that 32 of these are required. Approximately a football field area would be excavated to a depth of 6 ft. Forms and rebar would be placed and the heat pipes would be installed. The concrete would be poured and then the pit would be filled and compacted.

The 32 heat pipes must penetrate the confinement wall of the facility. These penetrations would be safety class penetrations which means that they cannot become a release path in the event of a DBA. Normally a safety class pipe penetration through a confinement structure is designed to not rupture the seal between the pipe and the wall and for the pipe to close if it is ruptured. Pressure loss in the pipe causes a check valve to close. This automatic closure feature cannot be designed into a heat pipe. Other means of addressing this release path must be accepted. The discussion in section 2.2 regarding the confinement features of the storage method is germane to this problem. The penetrations would not have to be safety class if the facility structure were not a safety class confinement system. Alternatively, it might be argued in a safety analysis that a release through a heat pipe pathway would be 3 ft under ground and could not result in an airborne release that would expose the public at the site boundary.

The 32 heat pipes represent one heat pipe per storage shelf level. These pipes would be 2 in diameter and about 170 ft long (120 ft in the storage array and 50 ft in the heat sink). The working fluid would be water. It may be necessary to slope the heat pipes to get gravity assistance for the fluid return. Over the 120 ft length of the storage shelves, the elevation change could be of the order of 2 ft which is about one shelf separation. Two heat pipe alternative designs can be implemented. In the first case, the 32 main heat pipes would be directly coupled to the bottom of the shelves along the long centerline of each shelf. This is possible if the pipes can be level. In the second case, the 32 main pipes would be manifolds mounted along the back of the storage shelf assembly. A short heat pipe which would be the analog of the shelf cooling coils in the active cooling design would be attached to the underside of each shelf at each storage location so that it would be located immediately above the centerline of the three containers at the location. There would be about 2000 of these short heat pipes. The short heat pipes would be clamped to the manifold pipes to transfer the heat to the manifold. The second option would be necessary if the main pipes had to be sloped.

5.2 POOL STORAGE

The existing stacker-retriever equipment would be removed. Both of the vault rooms would be converted into water tanks. Each tank would be served by a gantry robot. The wall at the maintenance end of the vault would be removed so that the tanks could fill this area as well as the existing vault rooms. A tank would accommodate an array of 8 x 83 x 5 = 3320 containers on 18 in centers 5 layers deep. The tank depth would be about 10 ft.

Construction would proceed as follows:

- The outer tank (room liner) would be made from 11 gage type 304 stainless steel. Sheets would be taken downstairs on the elevator. There would be about 100 sheets. Floor sheets would be furnished with coved corners preformed. All sheets would be pre-beveled for welding.
- The floor sheets would be placed. The butt welds at the joints would be made with a cold wire feed TIG welder.
- The wall panels would be erected after the floor panels were in place. They would be welded in the same manner. One end would be left for last.
- Formed stainless steel I- beams would be placed on about 4 ft centers across the floor. Formed stainless steel channels would be placed on the walls and skip welded to the 11 gage sheets. They would be located on the same line as the floor beams.
- The inner tank would be made of 1/2 in thick stainless steel plates brought downstairs on the elevator one at a time. The floor plates would be two pieces so they can be managed. This means that there would be a seam running on the long centerline of each room. The coved corners and joint bevels would be premade before delivery. Seams running across the room would be located so that the beams described above provide backing for the weld.
- The plates would be placed and welded using cold wire feed TIG welding. Welds would require multiple passes (3 probably) because of the plate thickness.
- Formed stainless steel channels would be attached to the top of the tank with 54 in separation. They would be welded to the inner tank and attached to the facility walls.
- Deck plates would be 1/2 in thick plates 54 in across by approximately half the width of the room. They would have three rows of holes for the tubes. Each tube hole would be surrounded by bolt holes. The deck plates would be machined before delivery. The plates would be welded to the support channels but the seams between the plates need not be welded.
- Each tank would have 664 tubes. It is unlikely that the tube diameter would work out to be a standard mill size. Therefore the tubes would probably be

made by rolling stainless steel sheet and welding the seams. The tubes would have to be delivered and installed in two pieces because the clearance between the deckplate and the ceiling is less than the length of the tubes. The seam between the lower part and the upper part would be welded in the field.

- Section divider panels made of 7 gage stainless steel would be installed and welded in place as the tubes are installed.
- The end walls of the tanks would be welded last.
- All welds that contain the water would be liquid penetrant inspected to assure that there are no weld defects prior to filling the tank. It may also be desirable to fill the interstitial space with helium and perform a helium leak test on the inner tank. The tubes could also be filled with helium and leak tested.

The rails for the gantry robot would be mounted on the vault room walls and the gantry would be installed. The clearance between the tank deck and the ceiling is insufficient to allow for use of a basket that would allow entire stacks of five to be removed or loaded at once. Placement and retrieval would be one container at a time.

An active chiller system would be the same as described in section 5.1.1.

Heat pipe cooling would require about 32 heat pipes as described in section 5.1.2. Heat pipe slope would not be an issue for the water tank.

5.3 SOLID BLOCK STORAGE

The solid block would be made from iron block modules. One module containing four holes would weigh somewhat less than 18 tons. 166 of these blocks would be required per vault room. Thus a total of 332 deliveries would be required. This alternative minimizes the number of blocks to be installed.

Movement into the building could be accomplished by removing the berm along the south wall and opening up the plug that was poured after the stacker- retriever was installed. A pad the thickness of the vault floor (18 in) would be poured. The blocks would be placed on machine skates when delivered to the pad. Forklifts could be used to push the blocks into place and tip them up once they were on the machine skates. Although relatively straightforward, this technique requires major construction.

0 APPLICATION OF STORAGE METHODS OPTIONS TO THE NMSF

Alternatively each hole can be created by casting a tube 18 in square with a 14 in diameter hole on its axis. If the iron were made in this form, the number of blocks being cast would increase by a factor of 4 but the individual block weight would be decreased to 4 1/2 tons. It is reasonable to open a hole in the roof of the facility and the intermediate floor which forms the ceiling of the vault room. The tubes could be lowered into the vault with a crane. An opening for bringing a forklift into the lower level of the facility would still be required since the blocks would have to be moved from the crane access point to the point of installation. This forklift might be brought through the tunnel from PF-4. Otherwise, a smaller opening in the south wall will be required.

TECHNICAL ADVANTAGES/DISADVANTAGES

All of the options presented above can meet the requirements of the definitive criteria set out in section 2.1. They are not all equally capable of addressing the uncertain criteria discussed in section 2.2.

6.1 SHELF STORAGE WITH A STACKER-RETRIEVER

The primary advantage of this system is that it requires the least extensive facility modification if the active shelf cooling option is employed. The existing stacker-retriever can be modified and used.

The use of heat pipes is an excellent way of managing the storage temperature through an indefinite duration of power loss but has the drawback of requiring penetrations in the confinement structure.

Relative to the other options the shelf storage with actively cooled shelves provides the shortest passive duration. However, the duration is probably adequate and assurance can be provided through redundancy in the cooling system and standby power backup.

The stacker-retriever is the least intelligent of the automation systems considered. It is only capable of moving items between the I/O station and the storage location. A transfer to manual control or another automated device (robot) must occur at the I/O window in order to extract the container from the tray/shield. This will make the surveillance inspections awkward since the stacker-retriever cannot present the bare container for inspection. The stacker-retriever is not capable of moving a container from storage to an inspection station, to a leak detector, to a neutron counter, to a calorimeter, and back to storage in a programmed sequence. It is, therefore, not capable of supporting a continuous inventory procedure.

The shelf storage stacker-retriever will have the worst radiation field performance of the options considered. The stacker-retriever aisle will generally be shielded by only 10 cm of water. The shielding between stored material and the accessible areas in other options is a number of feet thick. Previously performed analysis on a similar but not identical geometry suggest that 15 cm is required to achieve 25 mrem/hr in the aisle, so the radiation exposure rate will be well in excess of 25 mrem/hr.

The shelving method should be able to provide sufficient confinement integrity and resistance to DBAs to demonstrate that a release outside the storage array cannot credibly occur. The primary issues are addressed by the container and are independent of the array hardware. The array hardware must not support a fire and must resist earthquakes to protect the container. The shelving system is constructed of metals entirely and the shielding is water. It will not support a fire. The shelving structure can be adequately designed to withstand a design basis earthquake.

A RCRA inspection program if required would be hard to support with this system. Devices such as fiberoptics or gas sampling systems that might be connected to the storage locations could not be manipulated with the stacker-retriever.

6.2 POOL STORAGE

The primary advantages of pool storage are its excellent shielding and its excellent heat management characteristics.

Its primary disadvantages are that it requires complex field fabrication where quality is important, hydraulic forces in an earthquake must be accounted for, and there will always be uncertainty regarding the risk of a tank leak.

The gantry robot can be a very intelligent device. It can be guided by sensors that determine its precise location at all times. A system developed at Sandia can be employed that allows the robot to automatically determine its path through a three dimensional computer model of the vault using feedback from the position sensors. This device can automatically move a container through a sequence of inspection, test, and NDA stations on a pre-programmed schedule. It can, therefore support an automatic on-line inventory procedure. Furthermore, the excellent shielding properties of the pool should make the background low enough that the NDA stations could be setup in the vault where they could be accessed by the robot. Man access to the containers being inventoried should not be necessary.

As with the shelf/stacker-retriever method, the pool is not subject to fire and resistance to earthquakes can be built into the pool structure so that the containers will not be affected by DBAs. The pool method will support the argument that the facility need not act as a confinement structure.

The pool system can support an inspection program that meets the intent of RCRA, if it were required. The tube caps could be designed to seal. If any of the five containers within the tube leaked, the helium that was in the container would collect at the top of the sealed tube. Each of the tube caps could be connected to a capillary sample tube. These sample tubes would be manifolded to a few helium leak detectors. A data collection system could continuously activate valves so that the each tube would be sampled in a repeated sequence. The robot could pick the tube cap and set it aside when access was needed without disconnecting the sample tube.

6.3 SOLID BLOCK STORAGE

The primary advantages of the steel block storage are its shielding, its heat management properties, and its simple structure.

When compared to the water pool storage, the solid block shielding is probably somewhat less effective, its heat capacity is about 80% of the pool capacity, its construction is not dependent on the quality of complex field fabrication, and it cannot fail from leakage.

The primary drawback to the solid block method is the weight of the blocks to be handled during construction. The large weights make erection awkward.

The ability to support continuous surveillance, RCRA requirements, and assure that the stored containers are sufficiently armored to prevent a container failure are the same as the pool since the gantry robot and imbedded storage concepts are the same.

0 COST ESTIMATES

Cost estimates have been generated for the options described above. The cost of containers has not been included because they are the same for all options and because they can be provided as part of the NMSF operations funds when they are needed over a period of about five years that will be required to fill the vault. It should be noted that the container cost will be several million dollars because a unit cost of a few hundred dollars per container must be multiplied by 6600.

These same sort of large multipliers strongly effect the storage method estimates. The shelf method requires 6600 tray/shields with a total value of several million dollars. It also requires 2200 cooling coils or short heat pipes. The pool storage requires more than 1300 tubes and caps. The solid block method requires more than 1300 cast tubes and caps or 332 cast blocks and over 1300 caps.

In each case reasonable design details were sketched, material take-offs were figured based on metal layout considerations, and fabrication assembly sequences were worked out to arrive at fabrication labor expenses. The notes for this estimate back-up work are included in the attachment.

The results are as follows:

Shelves/Stacker-Retriever Active Cooling	$ 2,938,000
Shelves/Stacker-Retriever Heat Pipes	$ 2,945,000 to 4,039,000 ***
Pool With Gantry Robot Active Cooling	$ 3,842,000
Block With Gantry Robot Large Blocks, Side Entrance Active Cooling	$ 5,011,000
Block With Gantry Robot Cast Tubes, Top Entrance Active Cooling	$ 7,012,000

*** The range reflects two different heat pipe methods.

These estimates include materials and shipping, installation labor, ED&I, and a 30% contingency.

7.0 CONCLUSIONS AND RECOMMENDATIONS

The technical advantages/disadvantages discussion suggests that the shelving/stacker-retriever options are inferior to the other two options. The primary reason for this is that the stacker-retriever does not have the manipulative capability that the gantry robots have. Therefore, the stacker-retriever system does not offer the flexibility that should be retained in the design given criteria uncertainty discussed in section 2.2. Additionally, the radiation exposure in the vault may be marginal for the stacker-retriever system.

The technical advantages/disadvantages discussion for the pool and solid block methods suggests that both would work well and both offer the flexibility required because of the gantry robot. The block method is slightly favored because it is not subject to the risk of leakage which seems to be important given the long life nature of the facility. The difficulties of field fabricating the tank are roughly offset by the handling difficulties associated with the heavy blocks.

The cost estimates show that the shelves/stacker-retriever options are the least expensive, however they provide the least flexibility and protection.

The conclusion is that the shelving/stacker-retriever options offer the least technical benefit and are the least expensive. The water pool with a gantry robot provides more efficient capability at the median cost. The large steel block option is the most robust and is the most expensive. It would appear that the cost/benefit ratio is approximately equal for these options. The pool option is considered to be a reasonable selection, but the solid block option is the recommended selection because its ruggedness offers the least risk to successful long term operation of the facility.

COST

ESTIMATES

Storage Array
Shelf Storage Active Cooling

ITEM #	DESCRIPTION	QTY	UNIT	MH/UNIT	LABOR RATE	MAT'L	EQUIP.	SUB CONTR.	TOTAL
	DEMOLITION								
1	Remove Storage Boxes 2' X 4' 2752 EA	1376	Hrs	1	$15.72		$4.45		$27,753.92
1a	Remove Elec. Track & guide Rail	480	LF	0.08	$15.72		$1.48		$660.48
1b	Remove Cross Members	144	Hrs.	1	$15.72		$8.90		$3,545.28
1c	Remove Floor Rail	240	LF	0.06	$15.72				$226.37
1d	Remove Stands	352	Hrs.	1	$15.72		$4.45		$7,099.84
1e	Remove Mini Load Machines	32	Hrs.	1	$15.72				$503.04
2	Haul Material To Salvage 1 Truck & Driver	72	Hrs	1	$17.54		$71.00		$6,374.88
							Total Removals		$34,128.80
	SHELF MODS								
3	Al Plates/machine work/labor/hdwre	2200	Ea					$192.00	$422,400.00
3a	I Beam Cols. w6x16	2000	Lf	0.093	$29.16	$7.90	$1.62		$7,194.48
3b	3x3 Angle iron 4.5 lf ea	400	Ea	0.23	$29.16	$12.15			$3,800.52
3c	Anchor Bolts	800	Ea.	0.133	$29.16	$19.45			$5,172.10
							Total Shelf Mods		$438,567.10
	SHIELD MODULES								
4	Materials/labor	6600	Ea					$324.75	$2,143,350.00
	COOLING SYSTEM								
5	Tank	1	Ea					$2,000.00	$2,000.00
6	Pumps	2	Ea					$5,000.00	$10,000.00
7	Chillers	2	Ea					$30,000.00	$60,000.00
8	Generator	1	Ea					$50,000.00	$50,000.00
9	Insallation	1	Crew					$50,000.00	$50,000.00
							Cooling Sys Total		$172,000.00
	STACKER RETRIEVER								
10	Modifications	1	Lot					$50,000.00	$50,000.00
							Total Stacker Ret. Mods.		$50,000.00
11	EDI	1	Lot					$100,000.00	$100,000.00
							Total		$2,938,045.90

Storage Array
Shelf Storage Heat Pipes

ITEM #	DESCRIPTION	QTY	UNITS	MH/UNIT	LABOR RATE	MAT'L	EQUIP.	SUB CONTR.	TOTAL
	DEMOLITION								
1	Remove Storage Boxes 2' X 4' 2752 EA	1376	Hrs	1	$15.72		$4.45		$27,753.92
1a	Remove Elec. Track & guide Rail	480	LF	0.08	$15.72		$1.48		$660.48
1b	Remove Cross Members	144	Hrs.	1	$15.72		$8.90		$3,545.28
1c	Remove Floor Rail	240	LF	0.06	$15.72				$226.37
1d	Remove Stands	352	Hrs.	1	$15.72		$4.45		$7,099.84
1e	Remove Mini Load Machines	32	Hrs.	1	$15.72				$503.04
2	Haul Material To Salvage 1 Truck & Driver	72	Hrs	1	$17.54		$71.00		$6,374.88
							Total Removals		$34,128.80
	SHELF MODS								
3	Al Plates/machine work/labor/hdwre	2200	Ea					$192.00	$422,400.00
3a	I Beam Cols. w6x16	2000	Lf	0.093	$29.16	$7.90	$1.62		$7,194.48
3b	3x3 Angle iron 4.5 lf ea	400	Ea	0.23	$29.16	$12.15			$3,800.52
3c	Anchor Bolts	800	Ea.	0.133	$29.16	$19.45			$5,172.10
							Total Shelf Mods		$438,567.10
	SHIELD MODULES								
4	Materials/labor	6600	Ea					$324.75	$2,143,350.00
	HEAT PIPE SYSTEM								
5	2" X 200' Heat Pipe Fujikura America	1	Lot						$40,000.00
	Heat Pipe Installation	6400	Lf	0.26	$23.30				$38,771.20
6	Wall Penetrations 3"	32	Ea	2.1	$19.71	$15.81	$4.10		$2,662.46
7	Excavation For Conc. Heat Sinks	360	Cy	0.23	$19.88		$5.05		$2,064.20
8	Hauling	360	Cy	0.12	$17.94		$2.59		$886.90
9	Concrete Heat Sinks	360	Cy	2.25	$21.92	$63.50	$5.30		$44,908.20
10	Stacker Retriever Mod.	1	Lot					$50,000.00	$50,000.00
							Heat Pipe Sys Total		$179,292.96
	STACKER RETRIEVER								
11	Modifications	1	Lot					$50,000.00	$50,000.00
							Total Stacker Ret. Mods.		$50,000.00
12	EDI	1	Lot					$100,000.00	$100,000.00
							Total		$2,945,338.87

Storage Array
Pool Storage

ITEM #	DESCRIPTION	QTY	UNITS	MH/UNI	LABOR RATE	MAT'L	EQUIP.	SUB CONTR.	TOTAL
	DEMOLITION STACKER RETRIEVER								
1	Elec. Track	240	Lf	0.08	$15.72		$1.48		$330.24
2	Guide Rail (Top)	240	Lf	0.08	$15.72		$1.48		$330.24
3	Crossmembers	144	Hrs.	1	$15.72		$8.90		$3,545.28
4	Floor rail(2 bolt sys.)	240	Lf	0.06	$15.72				$226.37
5	Storage Boxes 2752 ea	1376	Hrs.	1	$15.72		$4.45		$27,753.92
6	Stands (88 Legs/w 2 Bolts)x 4 sets	352	Hrs.	1	$15.72		$4.45		$7,099.84
7	Mini-Load mach. 2 Ea.	32	Hrs.	1	$15.72				$503.04
8	Haul to salvage 1 Truck and driver	72	Hrs.	1	$17.54		$71.00		$6,374.88
							Demo Total		$46,163.81
	STAINLESS STEEL TANKS								
9	Material	1	Lot			$1,615,990.00			$1,615,990.00
10	Labor	1	Lot					$557,415.00	$557,415.00
							SS Tank Total		$2,173,405.00
	SFE								
11	Gantry Robots	2	Ea					$600,000.00	$1,200,000.00
	CHILLER LOOP SYS								
12	Tank	1	Ea					$2,000.00	$2,000.00
13	Pumps	2	Ea					$5,000.00	$10,000.00
14	Chillers	2	Ea					$30,000.00	$60,000.00
1	Generator	1	Ea					$50,000.00	$50,000.00
	Insallation	1	Crew					$50,000.00	$50,000.00
							Cooling Sys Total		$172,000.00
17	ED&I	1	Lot					$250,000.00	$250,000.00
							Total		$3,841,568.81

Storage Array
Steel Block Array/Active Cooling/Installed Through Basement Side Wall

ITEM #	DESCRIPTION	QTY	UNITS	MH/UNIT	LABOR RATE	MATL	EQUIP.	SUB CONTR.	TOTAL
	EXCAVATION								
	Remove & Replace Burms	43390	Cy					$6.00	$260,340.00
2	Compaction	21695	Cy	1	$1.50		$0.28		$38,617.10
3	18" Staging Slab	67	Cy	1	$50.00	$135.00	$6.00		$12,797.00
4	Shoring at East Side of Excavation	1900	Sf	1	$7.70	$8.05	$4.16		$37,829.00
							Excavation Total		$349,583.10
	DEMOLITION STACKER RETRIEVER								
5	Elec. Track	240	Lf	0.08	$15.72		$1.48		$330.24
6	Guide Rail (Top)	240	Lf	0.08	$15.72		$1.48		$330.24
7	Crossmembers	144	Hrs.	1	$15.72		$8.90		$3,545.28
8	Floor rail(2 bolt sys.)	240	Lf	0.06	$15.72				$226.37
9	Storage Boxes 2752 ea	1376	Hrs.	1	$15.72		$4.45		$27,753.92
10	Stands (88 Legs/w 2 Bolts)x 4 sets	352	Hrs.	1	$15.72		$4.45		$7,099.84
11	Mini-Load mach. 2 Ea.	32	Hrs.	1	$15.72				$503.04
12	Haul to salvage 1 Truck and driver	72	Hrs.	1	$17.54		$71.00		$6,374.88
12a	Remove Concrete Plug	252	Sf	0.52	$15.72		$1.45		$2,249.96
12b	Replace Plug	14	Cy	3.9	$21.92	$68.00	$9.30		$5,417.41
							Demo Total		$53,831.18
	STORAGE ARRAY HARDWARE								
13	Steel Blocks	99600	Clb			$17.50			$1,743,000.00
4	Rail Shipping (quote) Santa Fe RR	99600	Clb					$5.34	$531,864.00
	Truck Shipping(quote) White Cloud	332	Ea					$252.00	$83,664.00
16	Installation 4 iron workers 1 driver	2656	Hrs	5	$26.92		$7.53		$457,496.00
17	2 Cranes,2 operators	1328	Hrs	2	$19.88		$83.60		$274,842.88
							Storage Array Hdwr. Total		$3,090,866.88
	STORAGE ARRAY COOLING SYSTEM								
18	3" Copper Supply & return line	946	Lf	0.384	$29.56	$12.00			$15,097.25
19	1-1/2" Copper s & r line	1456	Lf	0.21	$29.56	$4.03			$10,270.48
20	1/2" Copper s & r Line	16268	Lf	0.134	$29.56	$1.28			$67,228.49
21	3" Pipe Insul.	676	Lf	0.155	$33.06	$1.35			$3,605.48
22	1-1/2" Pipe Insul.	1040	Lf	0.148	$33.06	$1.00			$5,242.52
23	1/2" Pipe Insul.	3320	Lf	0.14	$33.06	$0.75			$15,714.89
24	Termal Mastic	60	Bbl			$1,666.00			$99,960.00
							Cooling System Total		$217,119.10
25	ED%I	1	Lot					$100,000.00	$100,000.00
	SFE								
26	Gantry Robots	2	Ea					$600,000.00	$1,200,000.00
							Total		$5,011,400.26

Storage Array
Steel Block Array 18"x18"x11' Blocks/Active Cooling/Installed Through Roof

#	DESCRIPTION	QTY	UNITS	MH/UNIT	LABOR RATE	MAT'L	EQUIP.	SUB CONTR.	TOTAL
	DEMOLITION ROOF/FLOOR								
1	Remove dirt from roof	712	Cy	1	$4.14		$4.33		$6,030.64
2	Haul	712	Cy	0.12	$17.94		$3.71		$1,849.78
3	Demo Concrete openings for blocks	10	Cy	4.04	$15.72		$2.90		$752.25
4	Hauling	10	Cy	0.12	$17.94		$3.71		$25.98
4b	Replace concrete & openi	10	Cy	7.9	$21.92	$118.00	$13.80		$12,143.88
							Demo Total		$20,802.52
	DEMOLITION STACKER RETRIEVER								
5	Elec. Track	240	Lf	0.08	$15.72		$1.48		$330.24
6	Guide Rail (Top)	240	Lf	0.08	$15.72		$1.48		$330.24
7	Crossmembers	144	Hrs.	1	$15.72		$8.90		$3,545.28
8	Floor rail(2 bolt sys.)	240	Lf.	0.06	$15.72				$226.37
9	Storage Boxes 2752 ea	1376	Hrs.	1	$15.72		$4.45		$27,753.92
10	Stands (88 Legs/w 2 Bolts)x 4 sets	352	Hrs.	1	$15.72		$4.45		$7,099.84
11	Mini-Load mach. 2 Ea.	32	Hrs.	1	$15.72				$503.04
12	Haul to salvage 1 Truck and driver	72	Hrs.	1	$17.54		$71.00		$6,374.88
							Demo Total		$46,163.81
	STORAGE ARRAY HARDWARE								
	Steel Blocks	99600	Clb			$17.50			$1,743,000.00
	Rail Shipping (quote) Santa Fe RR	99600	Clb					$5.34	$531,864.00
15	Truck Shipping(quote) White Cloud	332	Ea					$252.00	$83,664.00
16	Installation 4 iron workers 1 driver	10624	Hrs	5	$26.92		$7.53		$1,829,984.00
17	1 Crane,1 operator	5312	Hrs	1	$19.88		$83.60		$549,685.76
18	1 Crane, 1 operator	5312	Hrs.	1	$19.88		$110.00		$689,922.56
							Storage Array Hdwr. Total		$5,428,120.32
	STORAGE ARRAY COOLING SYSTEM								
19	3" Copper Supply & return line	946	Lf	0.384	$29.56	$12.00			$15,097.25
20	1-1/2" Copper s & r line	1456	Lf	0.21	$29.56	$4.03			$10,270.48
21	1/2" Copper s & r Line	16268	Lf	0.134	$29.56	$1.28			$67,228.49
22	3" Pipe Insul.	676	Lf	0.155	$33.06	$1.35			$3,605.48
23	1-1/2" Pipe Insul.	1040	Lf	0.148	$33.06	$1.00			$5,242.52
24	1/2" Pipe Insul.	3320	Lf	0.14	$33.06	$0.75			$15,714.89
25	Termal Mastic	60	Bbl			$1,666.00			$99,960.00
							Cooling System Total		$217,119.10
26	ED&I	1	LOT					$100,000.00	$100,000.00
	SFE								
7	Gantry Robots	2	Ea					$600,000.00	$1,200,000.00
							Total		$7,012,205.75

MERRICK
NGINEERS & ARCHITECTS

ENGINEERING CALCULATION SHEET

CONTRACT
BY CHK'D

SUBJECT: Chilled Shelf & Shield Module Estimate

REVISION	DATE	BY

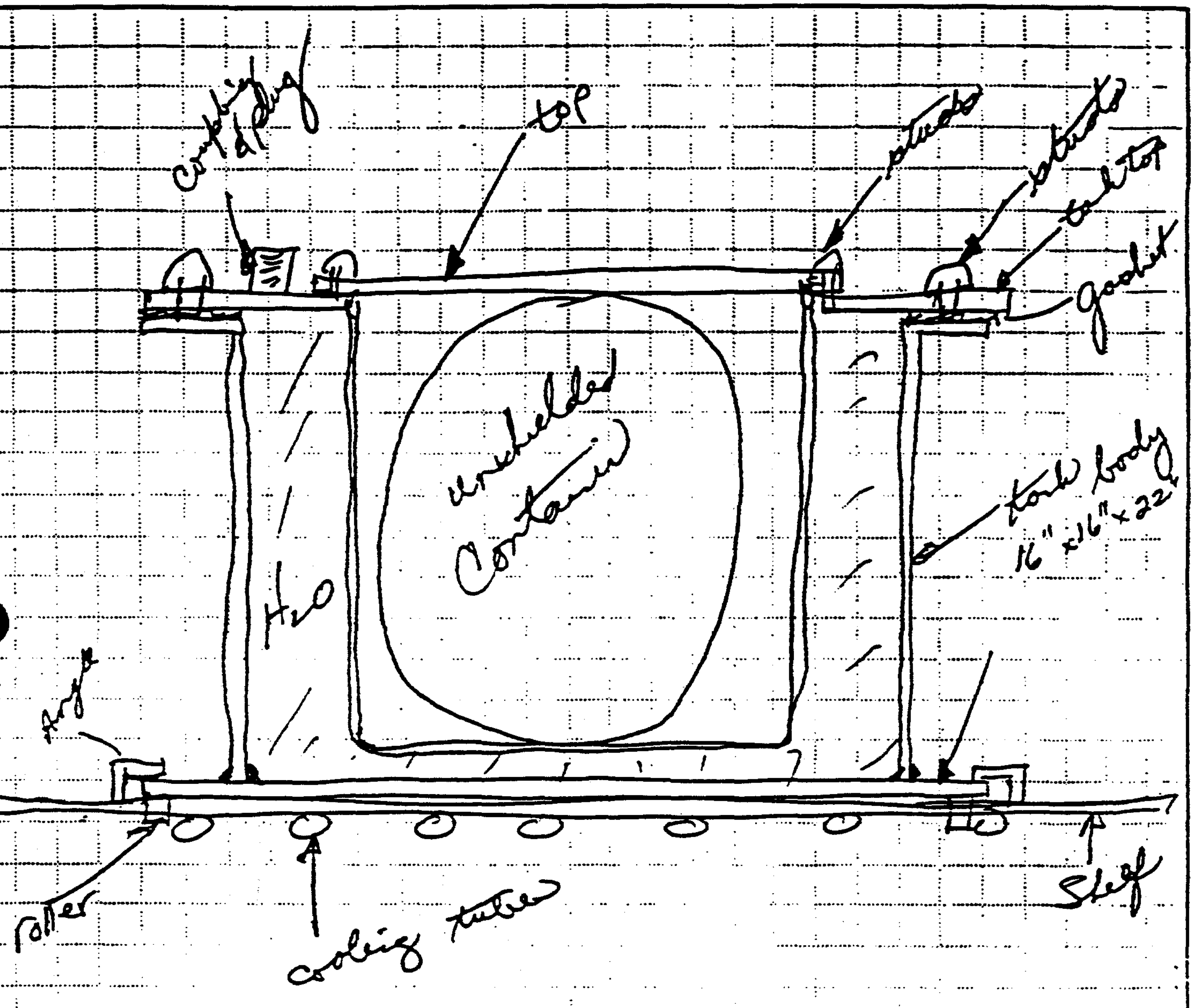

FORM 47B
REV 7-21-92

MERRICK
ENGINEERS & ARCHITECTS

ENGINEERING CALCULATION SHEET

DATE ____ SHEET 1 of 2
CONTRACT ____
BY ____ CHK'D ____

REVISION	DATE	BY

SUBJECT: Chilled Shelf and Shield Module / Estimate

Shelf Assy (2200 req'd)

Al plate		$75
Machine Plate		$25
Form Cu Tube	(1/4 hr)	$10
Al Angle		$10
Place & weld @	1/4 hr	$10
Rollers (8) @ $4 ea		$32
Assemble Cu Tube & plate	1/4 hr	$10
~~Con~~ Place & Connect	(1/2 hr)	$20
		$192

Tank (6600 req'd)

Base Plate	225 lbs	=	$33.75
Body	54 lbs	=	$81
Tank top	12 lbs	=	$18
Pot		=	$15
Top		=	$12
Shear ~~& Form~~ Punch & Form Body	(1/2 hr)	=	$20
Fit & weld body Seam	(1/3 hr)	=	$17
Weld Base	(1/2 hr)	=	$20
Short Tank Studs	(15 min)	=	$10 + $5 (studs)
Shear & Punch Top	1/4 hr	=	$10
Coupling & Plug		=	$8

SHEET

CONTRACT
BY CHK'D

REVISION	DATE	BY

SUBJECT: Chilled Shelf and Field module Estimate

Weld BOT to top	(1/4 hr)	$10
Weld Coupling	(1/8 hr)	$5
Shoot Top Studs	(1/4 hr)	$10
Cut & Punch Top	(1/4 hr)	$10
Cut & Punch Gasket, Vulcanize Corner	(1 hr)	$40

2~~1~~
3~~2~~75

round to $310

MERRICK
NGINEERS & ARCHITECTS

ENGINEERING CALCULATION SHEET

DATE
CONTRACT
BY CHK'D

SUBJECT: Heat Pipe Estimate Data

REVISION	DATE	BY

Heat Pipe Approach

2200 – Shelves
- Metal ½ Al = $75
- Machining = $25
- Clamps 3"×6"×9" Al ~~machined~~ Split and machined –

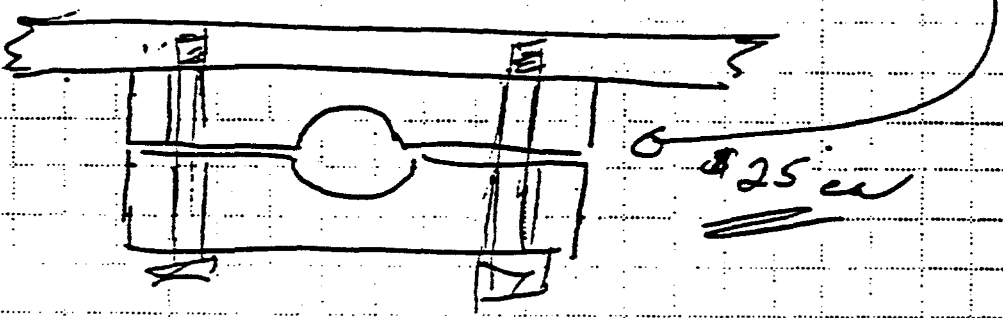

$25 ea

32 – 2"× 200' Heat Pipe = ???

32 – Wall penetrations = ???

32 – 1'×6'×50' Buried Concrete Blocks = ??

Heat Pipe & Shelf Install =

6600 Inner =

6600 Shielded Outer

odify Stacker/Retriever.

9-0

FORM 47B
REV 7-21-92

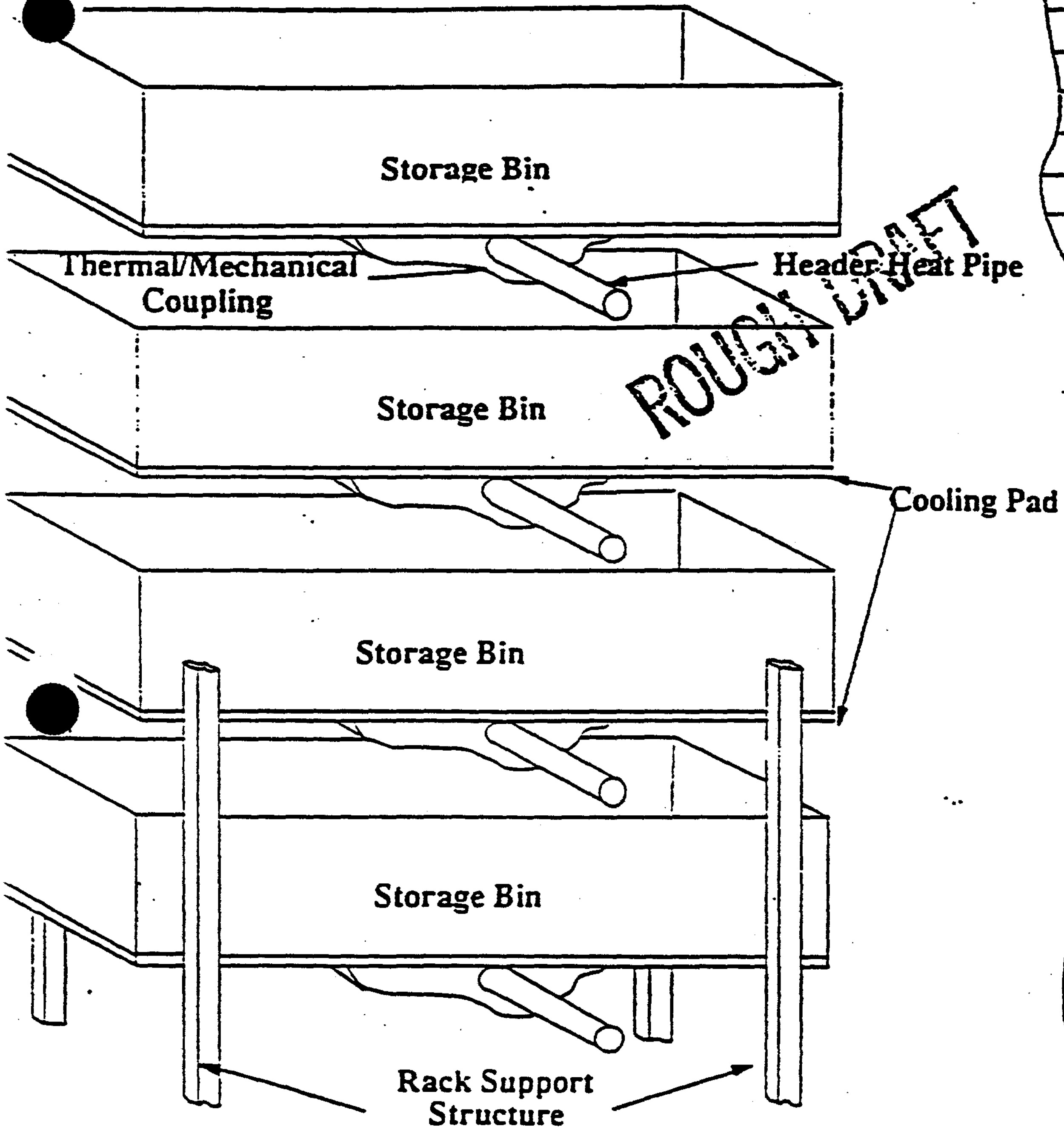

ROUGH DRAFT

Fig. 12. Schematic of drawer level cooling pad; direct coupling to header heat pipe.

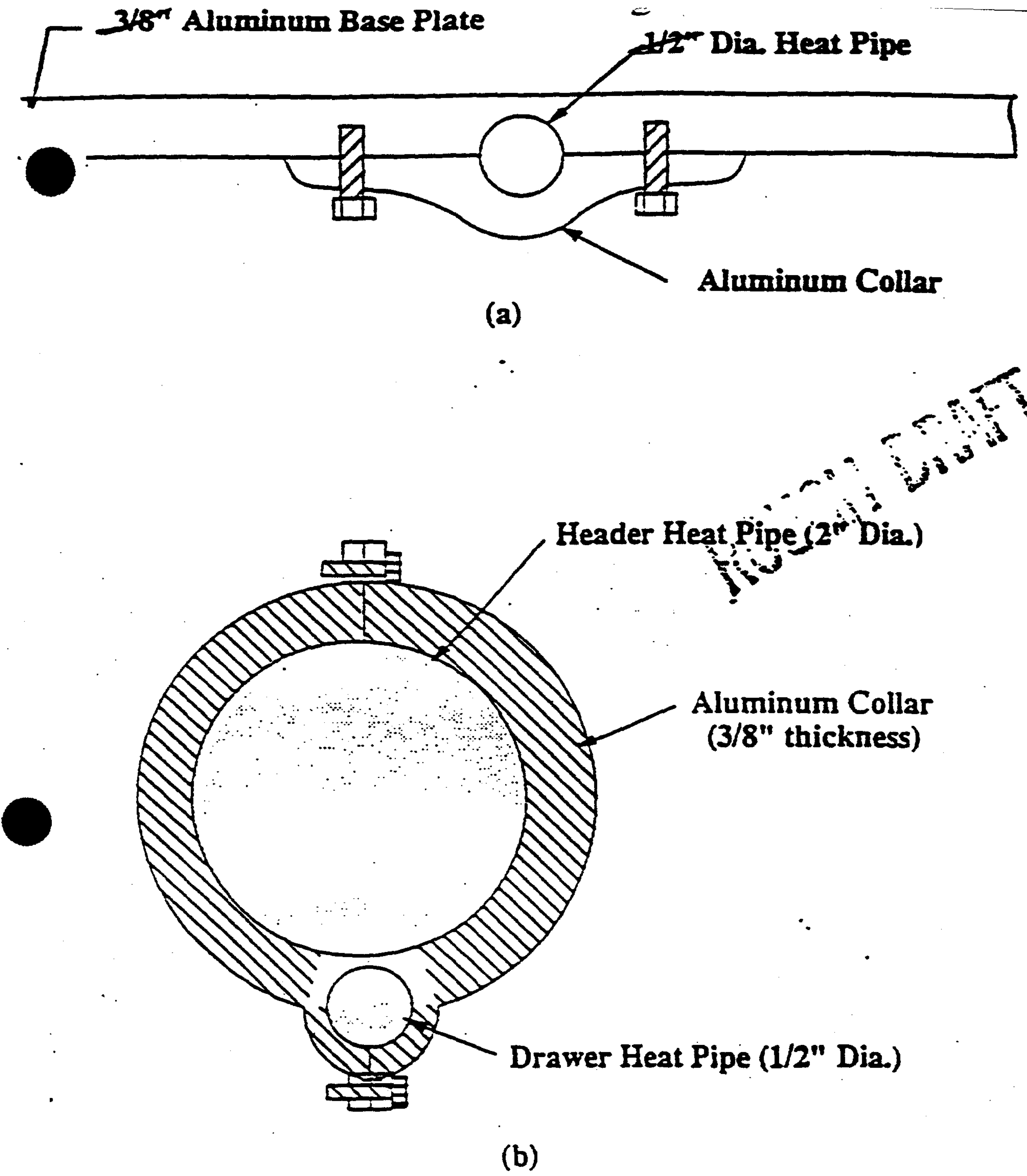

Note: All mating surfaces coated with a high-thermal conductivity epoxy.

Fig. 22. Thermal/mechanical coupling of drawer heat pipe to (a) cooling pad base plate, and (b) header heat pipe.

ılts from the heat pipe analysis and test indicate that a 1.27-cm diameter water ged heat pipe of length 122-cm is capable of transferring the heat load ıt of a vault heat load of up to 165 kW to the manifold-header heat pipe.

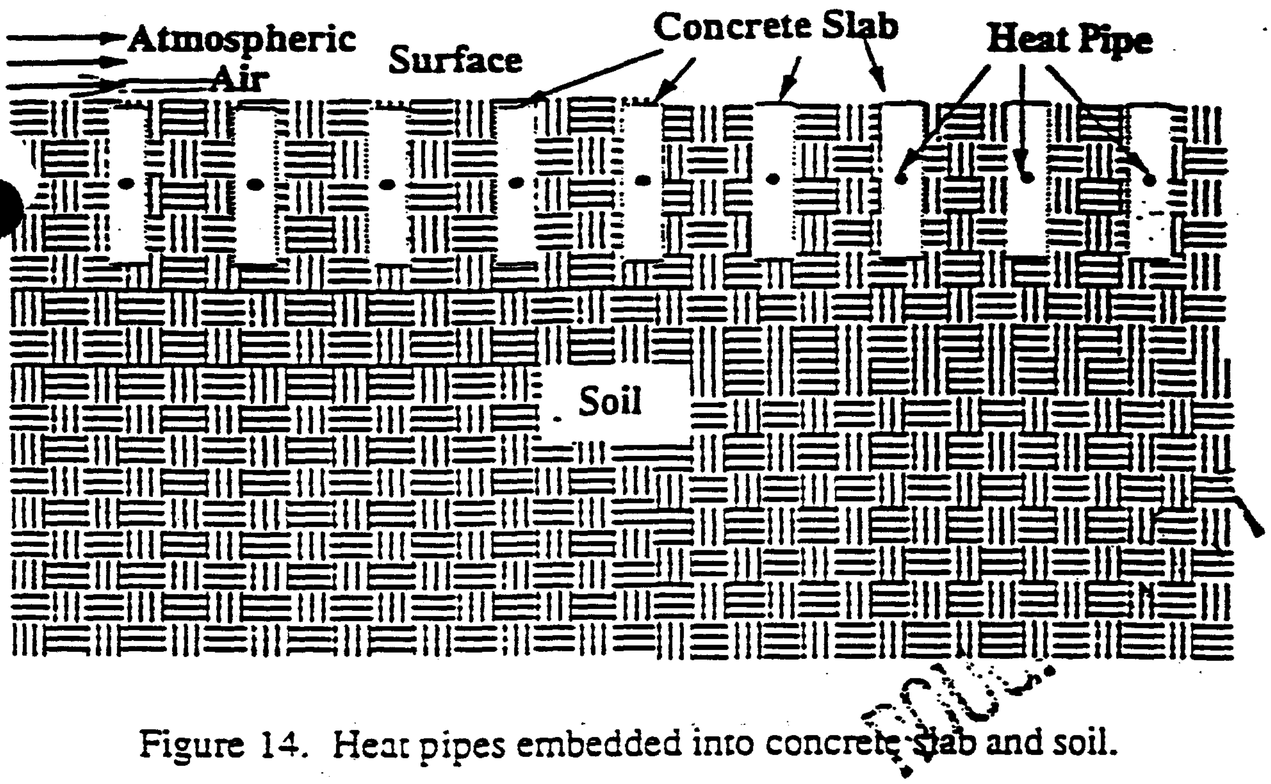

Figure 14. Heat pipes embedded into concrete slab and soil.

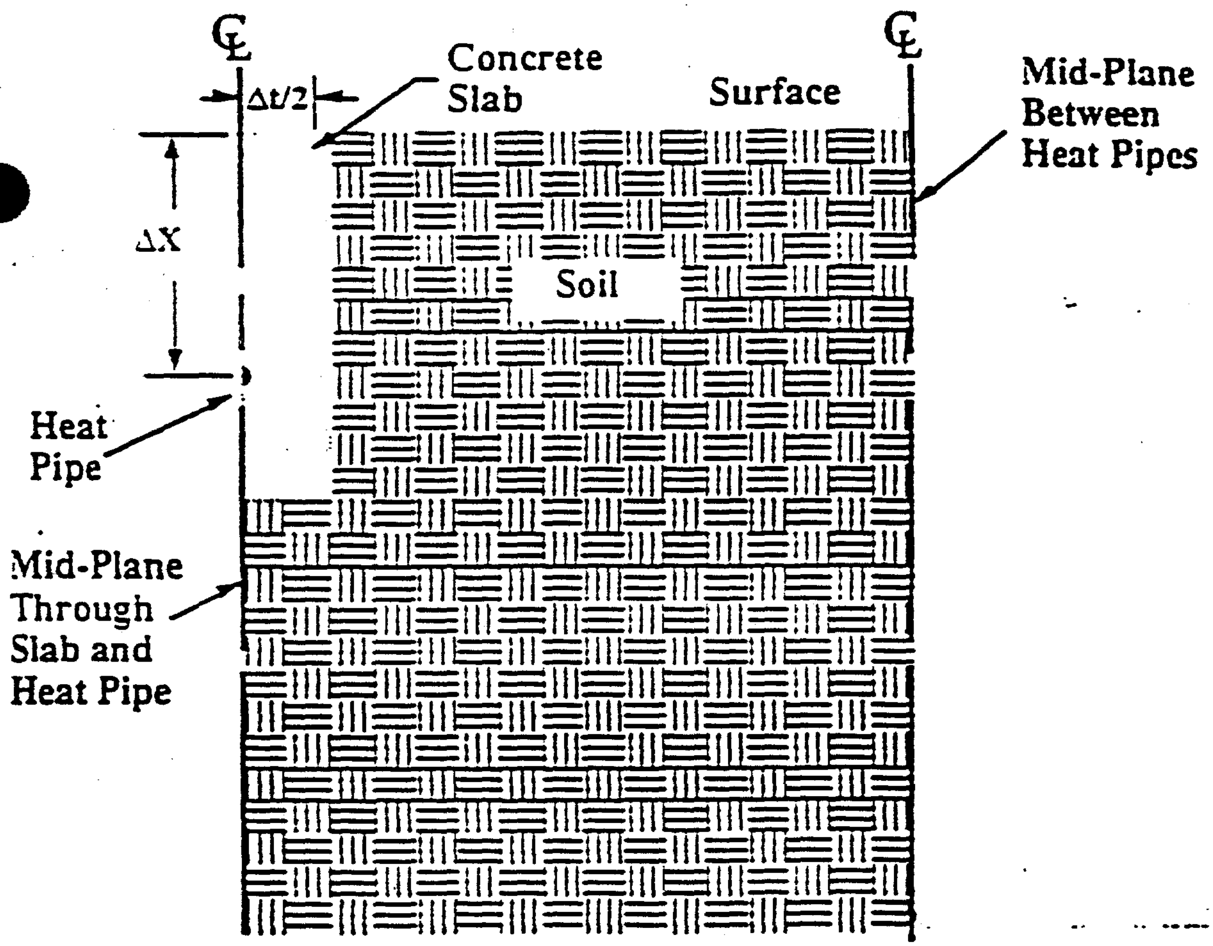

Figure 15. Geometry used for thermal analysis.

DRAFT

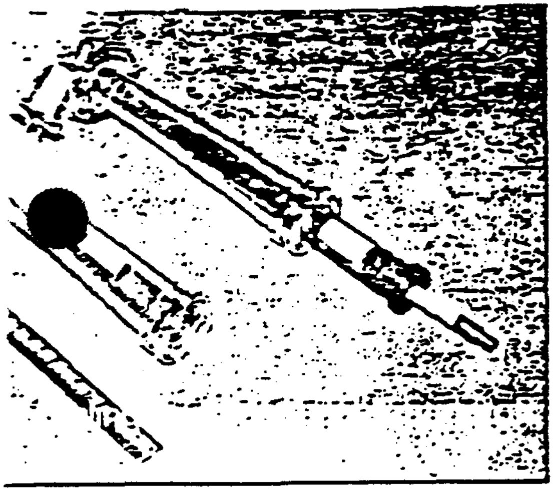

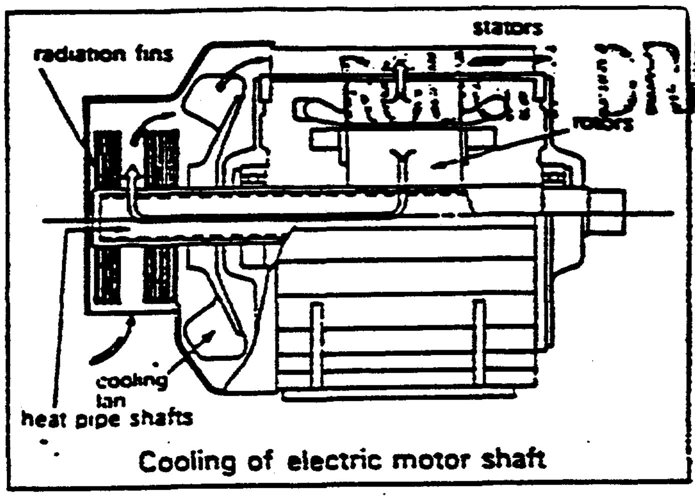

Cooling of electric motor shaft

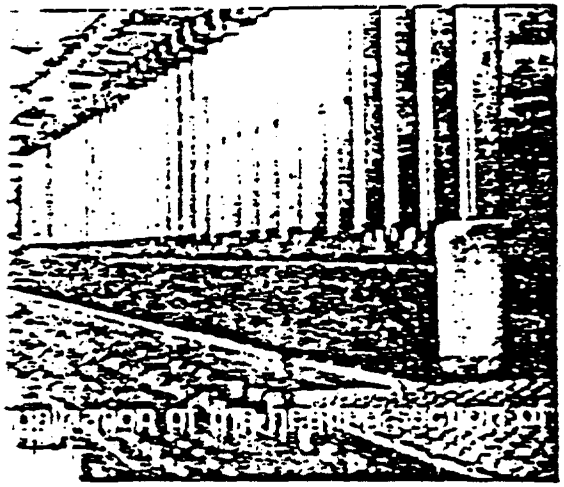

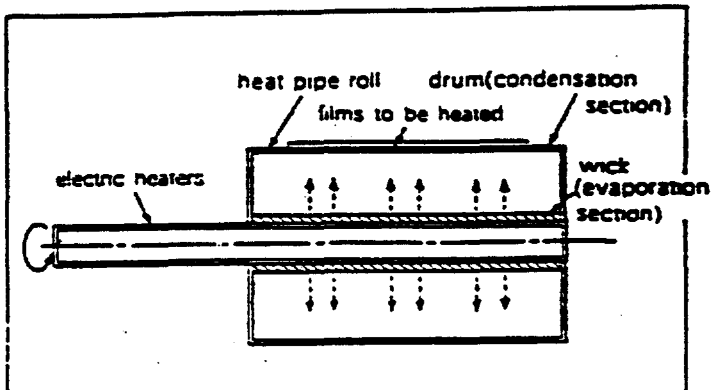

Temperature uniformity of the roller of printing machine

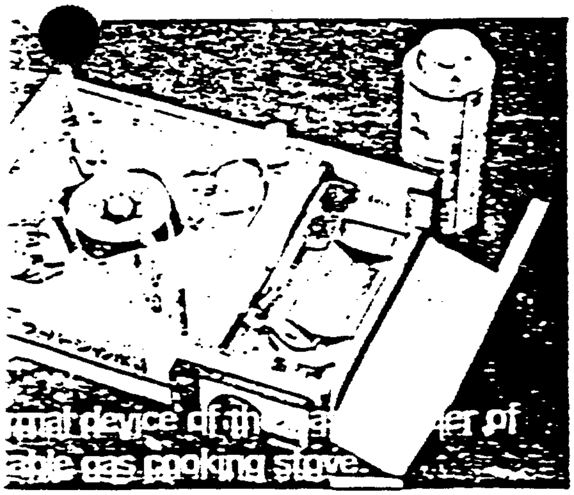

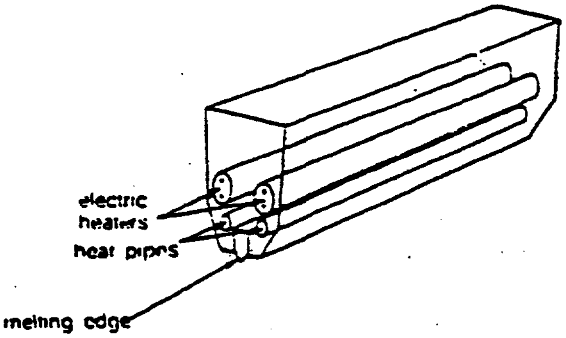

Temperature uniformity of heat sealer for plastic film.

ikura Ltd.

ce : 2-11-20 Nishi Gotanda, Shinagawa-ku, Tokyo 141, Japan
TEL: Tokyo 490-1111
TLX: 246-6655 FIWCCS J FAX: Tokyo 490-8219

fice : 1-5-1 Kiba, Koto-ku, Tokyo 135 Japan
TEL: Tokyo 647-1111
TLX: 246-6655 FIWCCF J FAX: Tokyo 646-3380

ikura America, Inc.

1400-100 Galleria Parkway, NW
Atlanta, Georgia 30339
TEL: (404)956-7200
FAX: (404)984-6965

ffice : Fig MECHATRONICS Inc. P.O Box 20, 2835-82nd Ave. S.E. Mercer Island WASHINGTON 98040 U.S.A
TEL: (206)232-4800 <
TLX: 910-444-4126
FAX: (206)232-3734

MERRICK
ENGINEERS & ARCHITECTS

ENGINEERING CALCULATION
SHEET

CONTRACT
BY CHK'D

REVISION	DATE	BY

SUBJECT: NMSF Option 1 & C
Storage Array

Heat pipe price

FuJiKura America Inc.
Atlanta Georgia (404) 956-7200

Heat pipes

32 - 2" x 200'

Jess. ~~Fear~~ Firlus
Price will be available 8:00 AM 10/29/93

~~Ms Icus~~

JANE ICUS

FORM 478
REV. 7/21/92

MERRICK
ENGINEERS & ARCHITECTS

ENGINEERING CALCULATION SHEET

DATE
SHEET 01
CONTRACT
BY CHK'D

SUBJECT: Heat Pipe Estimate

REVISION	DATE	BY

if the manifold alternative is used the

2200 4½' x ½" heatpipe ≅ $100 ea

= $220,000

2200 clamps @ $25 ea = $55,000

so add $275,000 to the other option

MER ..COMPANY JOB NO. 8907 NO. ______ ESTIMATING INPU RM

PROJECT: NMSF Storage OPT IC PREPARED BY: KH CHKD BY: ______ DISCIPLINE: ______ SHT # ______ OF ______

NO.	UNIT PRICE SOURCE (Means No., Quote, etc.)	DB NO.	TAKE-OFF ITEM DESCRIPTION	QTY	UNITS	MH/ UNIT	LABOR RATE	MAT'L	EQUIP	SUB CONTR.
1										
2	151-401-1260		Instal 2" Heat pipes	7600	LF	.26	23.30			
3										
4	020-125-0300		Core drill & 3" Holes in							
5			Conc. wall	32	ea	2.11	19.71	15.81	4.10	
6			1 Carp 1 Lab Avg. 19.71							
7										
8	022-250-2055		Excavation For Blocks							
9			32 ea 2 cys.	360	CY	.23	14.88		5.05	
10										
11	022-266-0550		Hauling	360	CY	.107	17.99		2.51	
12										
13	0		Concrete Block in							
14			Reinforcing and Placing and							
15			Forms. Mf Mobile Quot	360	CY	2.25	21.92	63.50	5.3	
16										
17										
18										
19										
20										
21										
22										
23										
24										
25										

MERRICK
ENGINEERS & ARCHITECTS

ENGINEERING CALCULATION SHEET

CONTRACT
BY CHK'D

SUBJECT: Pool Estimate

REVISION	DATE	BY

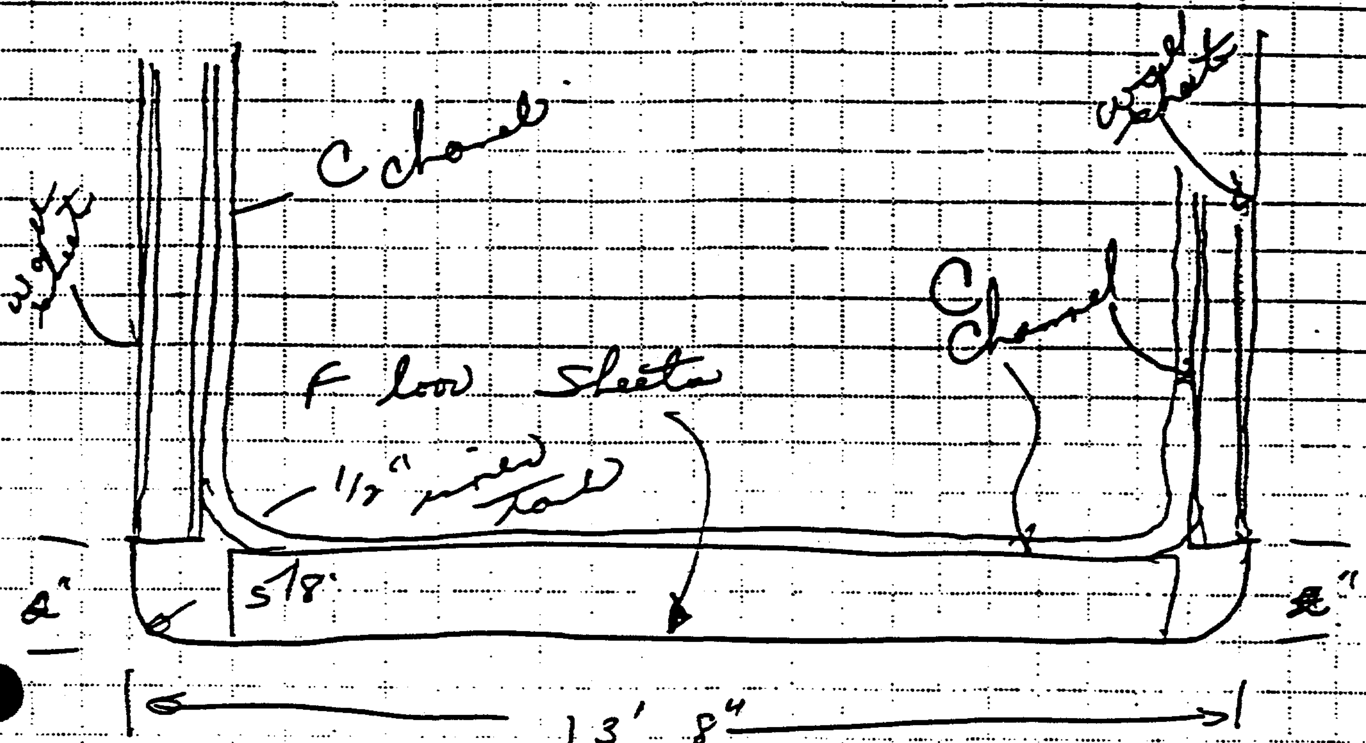

~~by~~ buy sheets 14' x 4'. need 25
for the floor (per Room)

wall sheets would be 12' x 4'. need 50
per room.

ends would ~~be~~ require ~~[illegible]~~ ~~third~~ 6 more 12' x 4' pieces
per room

FORM 479
REV 7/21/92

MERRICK
NGINEERS & ARCHITECTS

ENGINEERING CALCULATION
SHEET

CONTRACT
BY CHK'D

REVISION	DATE	BY

SUBJECT: Pool Estimate

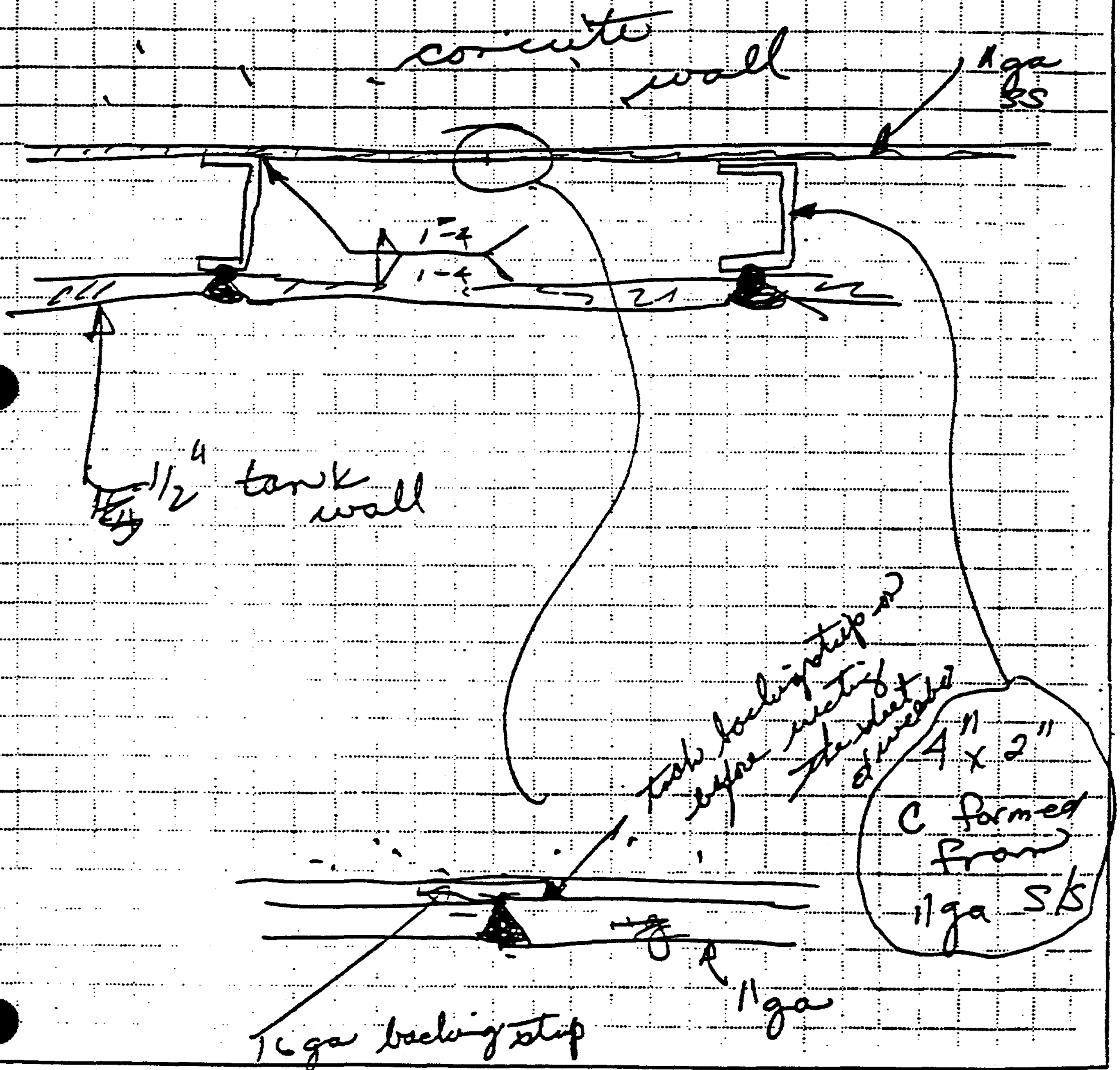

FORM 478
REV 7/21/92

MERRICK
NGINEERS & ARCHITECTS

ENGINEERING CALCULATION
SHEET

CONTRACT
BY CHK'D

SUBJECT: Pool Exteriate

REVISION	DATE	BY

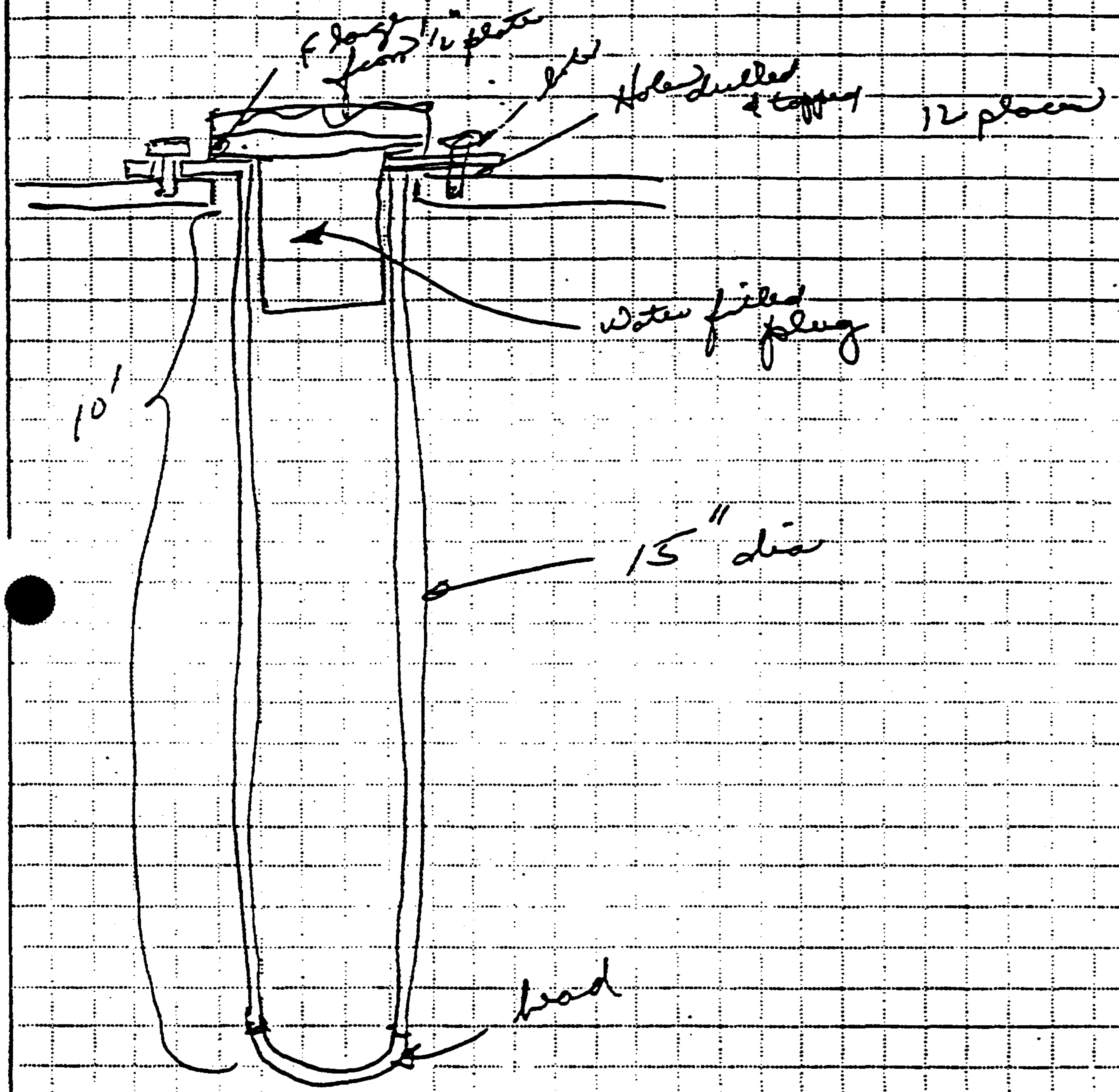

MERRICK
ENGINEERS & ARCHITECTS

SHEET

CONTRACT
BY CHK'D

REVISION	DATE	BY

SUBJECT: Pool Estimate

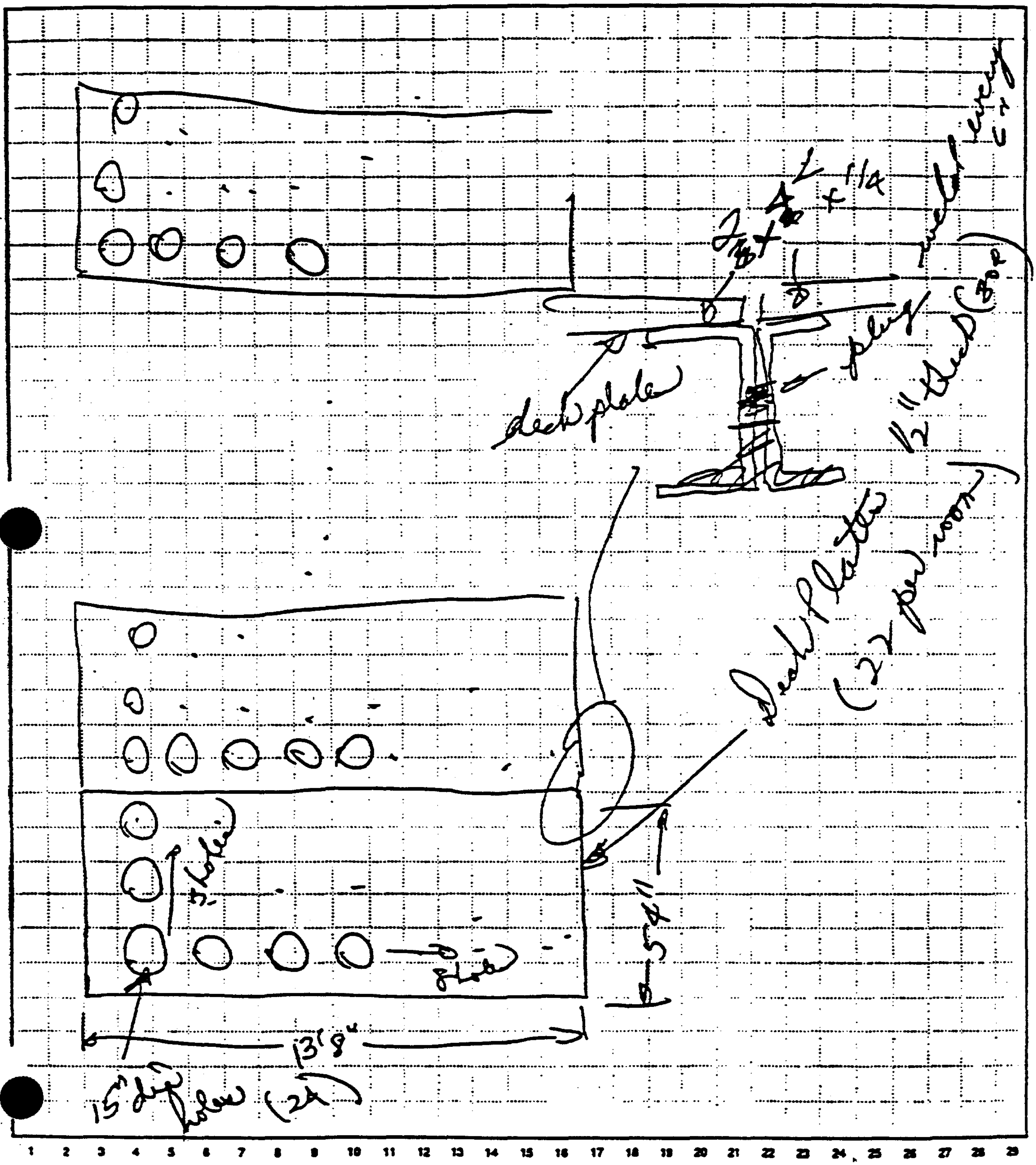

FORM 473
REV 7/2/92

ENGINEERING CALCULATION SHEET

CONTRACT
BY CHK'D

REVISION	DATE	BY

SUBJECT: Pool Estimate

Tank Materials

11 ga sheets :

14' x 4' need 50 = 15,400 lbs

12' x 4' need 112 = 29,568 lbs

44,968 lbs

x $1.50 = $67,500

wall

Channels = 36 lbs = $54

shear, form = lbr = $40

$94 ea need 100 = $9400

1/2" plate

14'x4' need 50 = 61,600 lbs

10'x4' need 112 = 98,560 lbs

160,160 lbs

x $1.50 = $240,000

SUBJECT: Pool Estimate

REVISION	DATE	BY

Floor C channels

make 3"x4" from 1/4" every 2' = 50 per

room = 108 lbs each x 103 = 10,853 lbs

x $1.50 = $16,250

Deck Plates

1170 lbs (ea) = $1750

\+ Shear CNC Mill (or Boring Bar) = $600

$2350 each

need 44 = $103,400

Tube Flange

45 lbs each = $67.50

Machining the CNC = $75

$142.5

need 1328 = $189,000

ENGINEERING CALCULATION SHEET

CONTRACT
BY CHK'D

SUBJECT: Pool Estimate

REVISION	DATE	BY

Tube (cut from 11 ga, roll, & weld)

matl (can only get one per sheet)

therefore we need 1328 sheets 4'x10'

= 292,000 lbs x $1.5 = $ 438,000

roll 1/2 hr each = $20

weld 3" perim = 1 hr = $40

head = $30

weld on head = 1/2 hr = $20

weld on flange = 1/2 hr = $20

leak check = 1 hr = $40

$170

x 1328

$225,000

Total for tubes = $663,000

MERRICK
ENGINEERS & ARCHITECTS

SHEET

CONTRACT
BY CHK'D

REVISION	DATE	BY

SUBJECT: Pool Estimate

Deck Plate supports

2×4 angle 15' (2 per joint) = ~~$~~ 26'

× 44 joints = 5700 lbs = $11,400

+ cut, drill, & plug weld (25 places)

6 hrs × 40 = $240

× 44

$10,560

total for deck support = $22,000

Plug bottom = 1/2" plate made from tube flange drop

machining = $25

plug top 1/4" plate 15 1/2" dia = 22 lbs = $33.75 ea

Body (11 ga) 4 per 4'×8' sheet so 8 sq ft ea = 44 lbs $66 ea

fill coupling & plug $5

shear
oll and weld body = 1 hr = $40

eld bottom & Top = 1 hr = $40

FORM 475
REV 7/21/92

MERRICK
NGINEERS & ARCHITECTS

SHEET

CONTRACT
BY CHK'D

SUBJECT: Pool Estimate

REVISION	DATE	BY

~~Total~~ leak test = 1/2 hr = $20

total plug cost = $230
× 1328
= $\boxed{\$305,440}$

FORM 473
REV

MERRICK
GINEERS & ARCHITECTS

ENGINEERING CALCULATION SHEET

CONTRACT
BY CHK'D

ECT: Pool Estimate

REVISION	DATE	B

Labor

Set Floor piece and two wall piece 3 people
1/2 day = 12 hrs (must be done 100 times) = 1200 h

Weld 1 seam 37' @ 3" per min. = 2 1/2 hrs
must be done 100 times = 250 h

Install Channels 2 people × 2 hrs = 4 hrs × 200 = 800 h

Place and erect inner floor plate and 2
in wall plates 3 people 1/2 day = 12 hrs × 100 times = 12

Weld 1 seam 37' @ 3" per min 4 passes = 10 hrs
must be done 100 times = 10

LPT all seams inner & Outer tanks = 4 hrs per seam 200 ×
= 800 hrs

Install deck supports 4 hrs ea × 44 = 176 hrs

Install deck plates 4 hrs ea × 44 = 176 hrs

Install tubes 2 hrs ea × 1328 = 2656

APPENDIX NO. 4

SOLID BLOCK STORAGE DRAWINGS

1. FLOOR PLAN
2. PROCESS FLOW SCHEMATIC
3. STORAGE ARRAY CROSS SECTION

Page left intentionally blank.

Page left intentionally blank.

APPENDIX NO. 5

SOLID BLOCK STORAGE ESTIMATE DATA

SUMMARY: SOLID BLOCK STORAGE – PER CDR

DEMOLITION AND BUILDING FOR SOLID BLOCK STORAGE

ITEM	SOLID BLOCK CONCEPT	ADD CONTINGENCY @ 25%	TOTAL FOR SOLID BLOCK CONCEPT	COMMENTS
DEMO AND BLDG MODS	6,865,088	1,716,272	8,581,360	PER MERRICK ESTIMATE
STORAGE ARRAY / SFE	4,880,018	1,220,005	6,100,023	PER MERRICK ESTIMATE – SEE NOTE 1
STORAGE BASKETS	664,000	166,000	830,000	NOT INCLUDED IN CDR – SEE NOTE 2
TOTALS	**$12,409,106**	**$3,102,277**	**$15,511,383**	

NOTES:

1. SOLID BLOCK CONCEPT SFE COSTS INCLUDE GANTRY CRANE AND MATERIAL HANDLING DEVICES REQUIRED.
2. COMPLEX 21 CONTAINER NOT AVAILABLE. BASKETS WILL BE REQUIRED TO HANDLE CONTAINERS. SEE BASKET ESTIMATE IN PASSIVE COOLING CONCEPT – $1000 EA, 664 REQ.

SOLID BLOCK STORAGE ARRAY – FROM CDR

DESCRIPTION	ITEM NO.	CATEGORY DIRECT COST
STORAGE ARRAY HARDWARE	E2S11	2,474,684
ARRAY COOLING SYSTEM	E2S12	390,760
GANTRY ROBOT	E2L13	1,200,000
STORAGE VAULT AGV	E2L13	80,000
STORAGE ARRAY SHIPPING	E2S13	734,574
TOTAL		**$4,880,018**

Los Alamos National Laboratory
Nuclear Materials Storage Facility

Value Engineering Report

February 1994

Provided for: Carolyn E. Zerkle
Los Alamos National Laboratory

Facilitated by: Geoffrey E. Parker, CVS (ICF KH)
Fred Kolano, CVS (RUST Geotech)

- The advantages for the cooling slab under the storage array were: improved reliability, reduced construction cost and cooling piping protected.
- Using the alternative material (concrete) eliminated the heavy duty bridge crane needed for the cast iron blocks, eliminated berm and exterior wall removal to install cast iron blocks, reduced transportation costs, reduced in place costs during installation, reduced construction schedule by 6 months, and makes D&D easier.

Disadvantages

- Reduced storage height will increase the cost for shield plugs (need more) and require some minor additional wall demolition for the gantry transfer rails and another gantry rail set on the east side of the vault.
- Slab cooling under the array limits the flexibility for any future modifications and makes leak repair more difficult.
- An alternate material installation reduces the potential salvage benefit from the currently installed stacker, retrievers (cannot remove intact) and slightly reduces thermal conductivity.

Potential Savings

Present costs (saved)	$3.6M (cast iron blocks, shipping)
	$0.1M (20 ton crane)
	$0.6M (berm removal, wall removal)
Proposed cost (added)	($1.0M) (forms and concrete)
	($0.5M) (Stainless tubing for cooling)
	($0.2M) (more plugs)
	($0.1M) (Stacker/shelving removal)
Schedule savings (saved)	$1.0M (6 months)
Total potential savings	$3.5M (direct costs)

Action Plan

Verify revised storage array option.
WHO: Merrick & Company
WHEN: Before Title I

3. HVAC Modifications

Current Situation

The current HVAC design shows parallel supply lines with two HEPA filters banks in series, parallel exhaust lines with three HEPAs filter banks in series, plus a couple of other filter banks for recirculation. The '94 CDR includes remote operated dampers.

APPENDIX NO. 6

STORAGE CONTAINERS AND ASSOCIATED EQUIPMENT SKETCHES

1. AT400 A. CAPSULE
2. METALS AND OXIDE CONTAINER
3. CHARGE DECK SECTIONS
4 DRYWELL
5. CONTAINER BASKET
6. SHIELD PLUG
7. TERTIARY CAPSULE

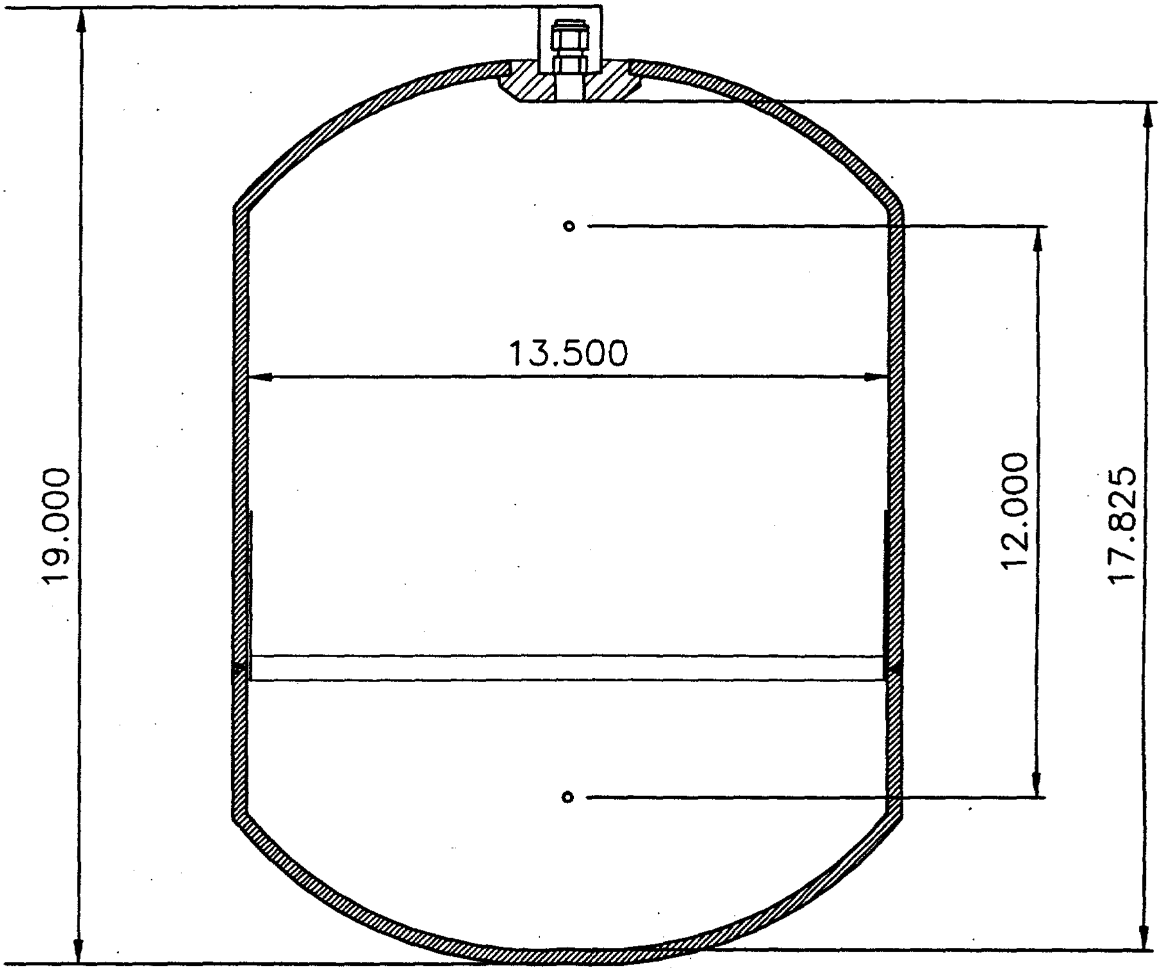

AT 400 A CAPSULE

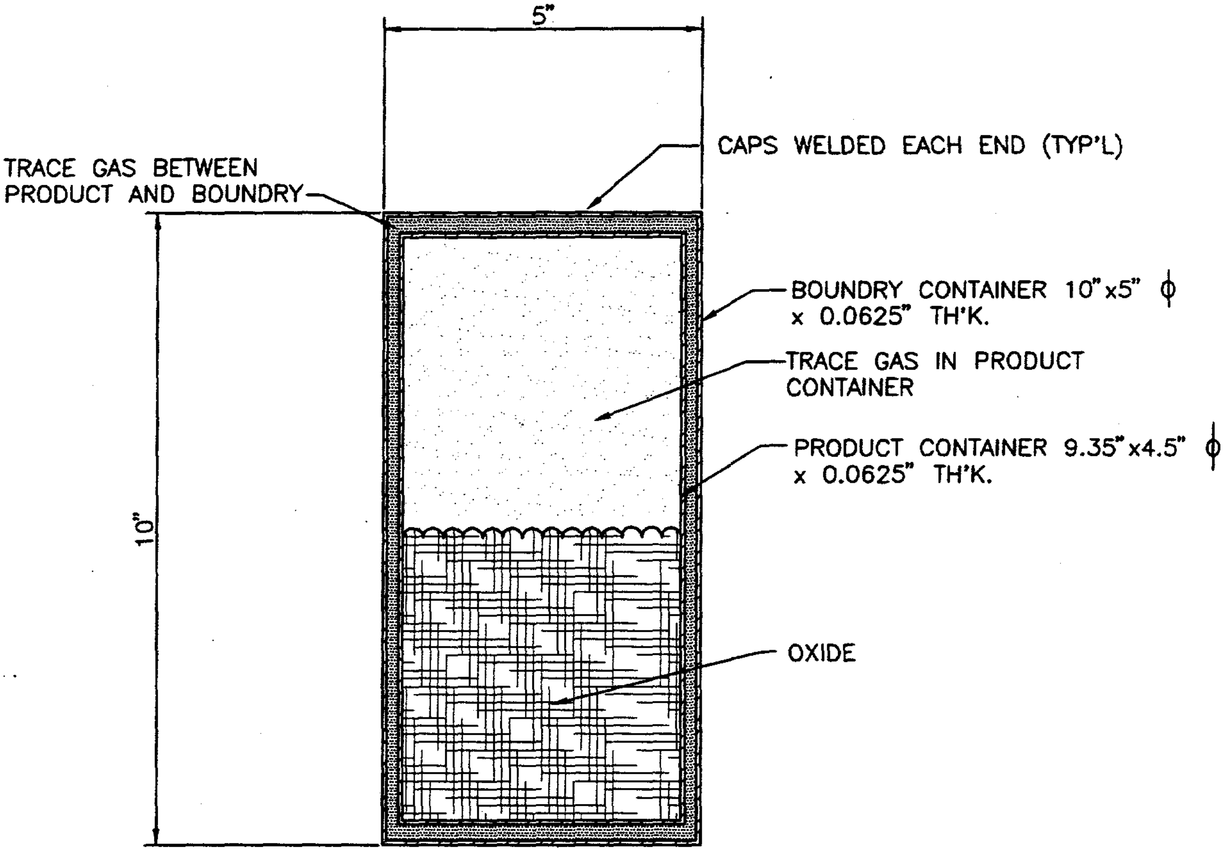

OXIDE/METALS CONTAINER

SCALE: 1/2"= 1'-0"

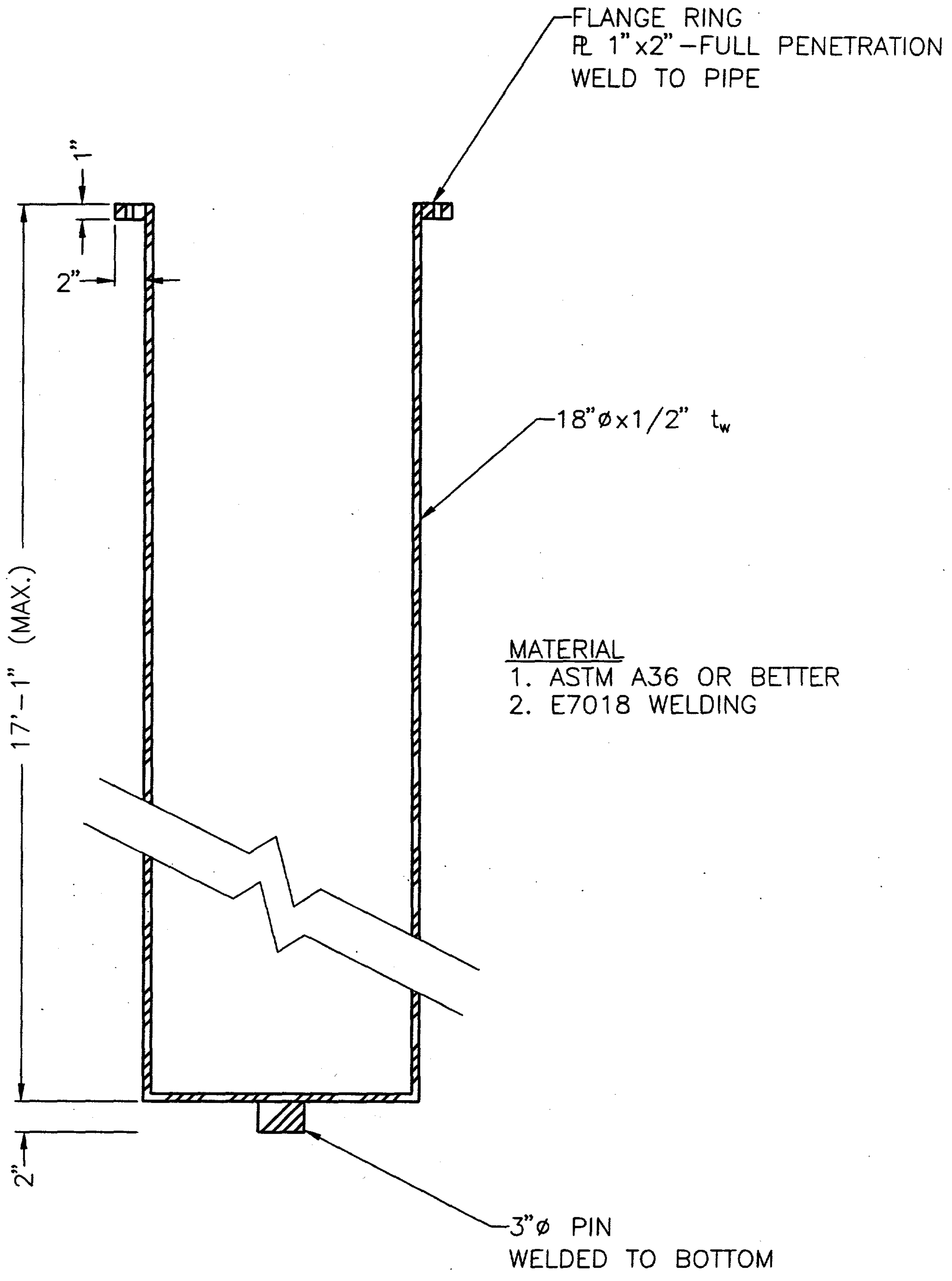

MATERIAL
1. ASTM A36 OR BETTER
2. E7018 WELDING

DRYWELL

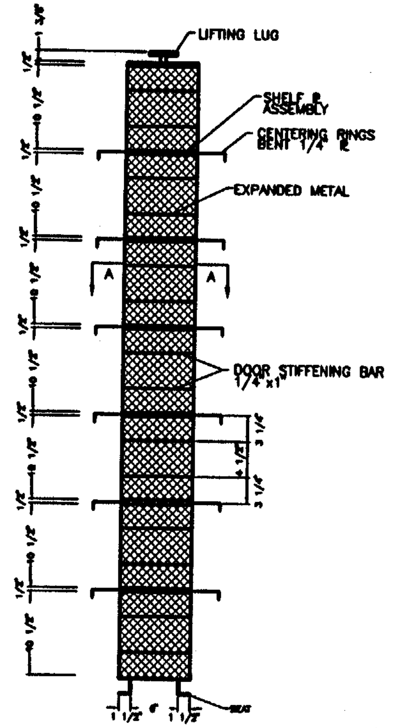

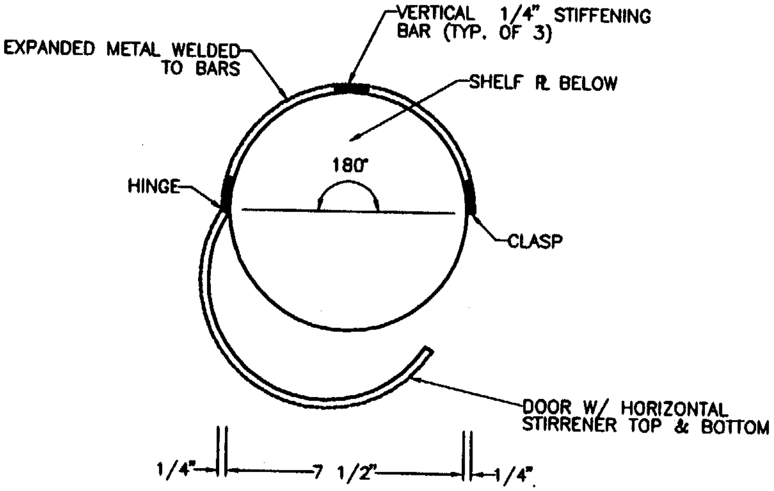

SECTION A–A

OXIDE/METALS CONTAINER SYSTEM BASKET

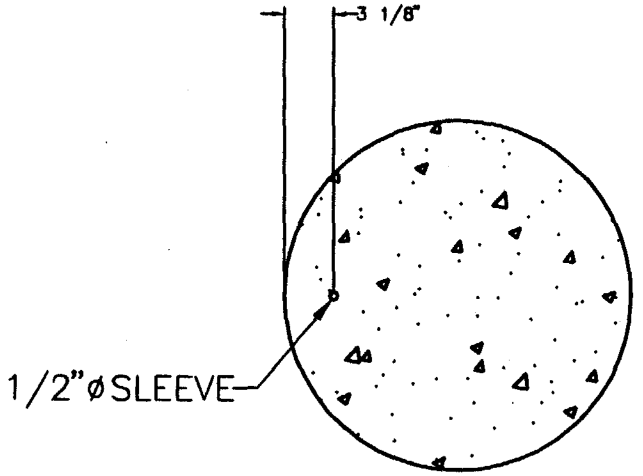

SECTION A–A

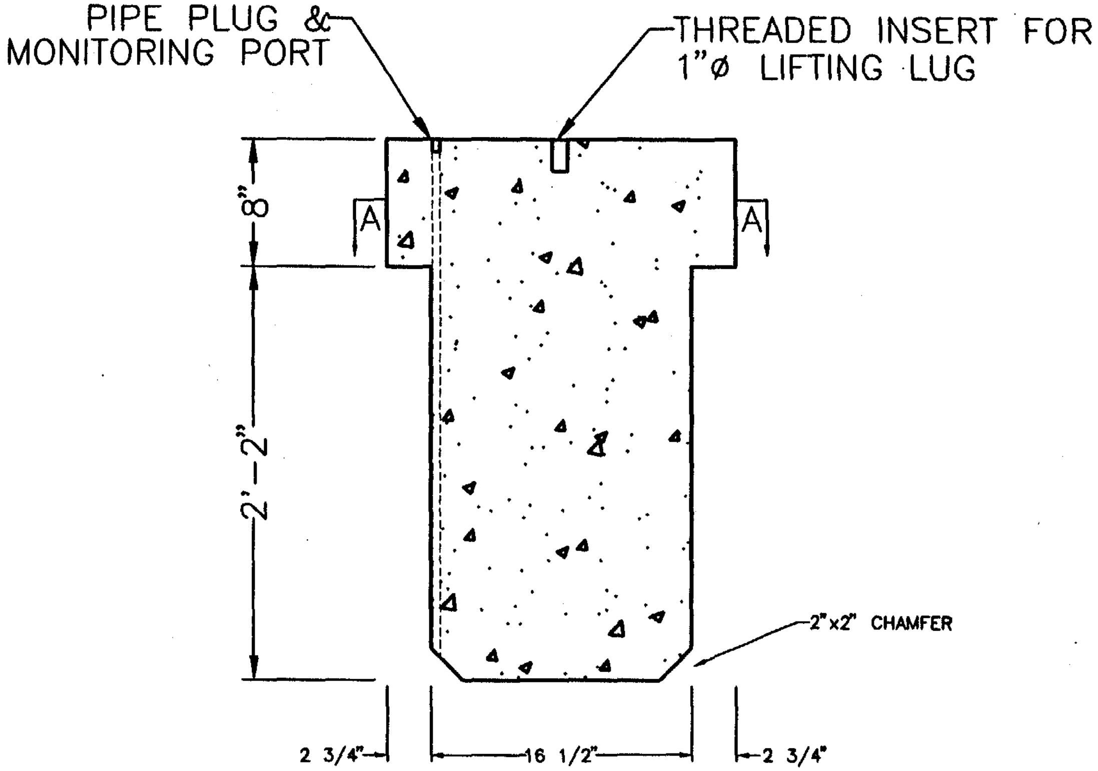

CONCRETE SHIELDING PLUG

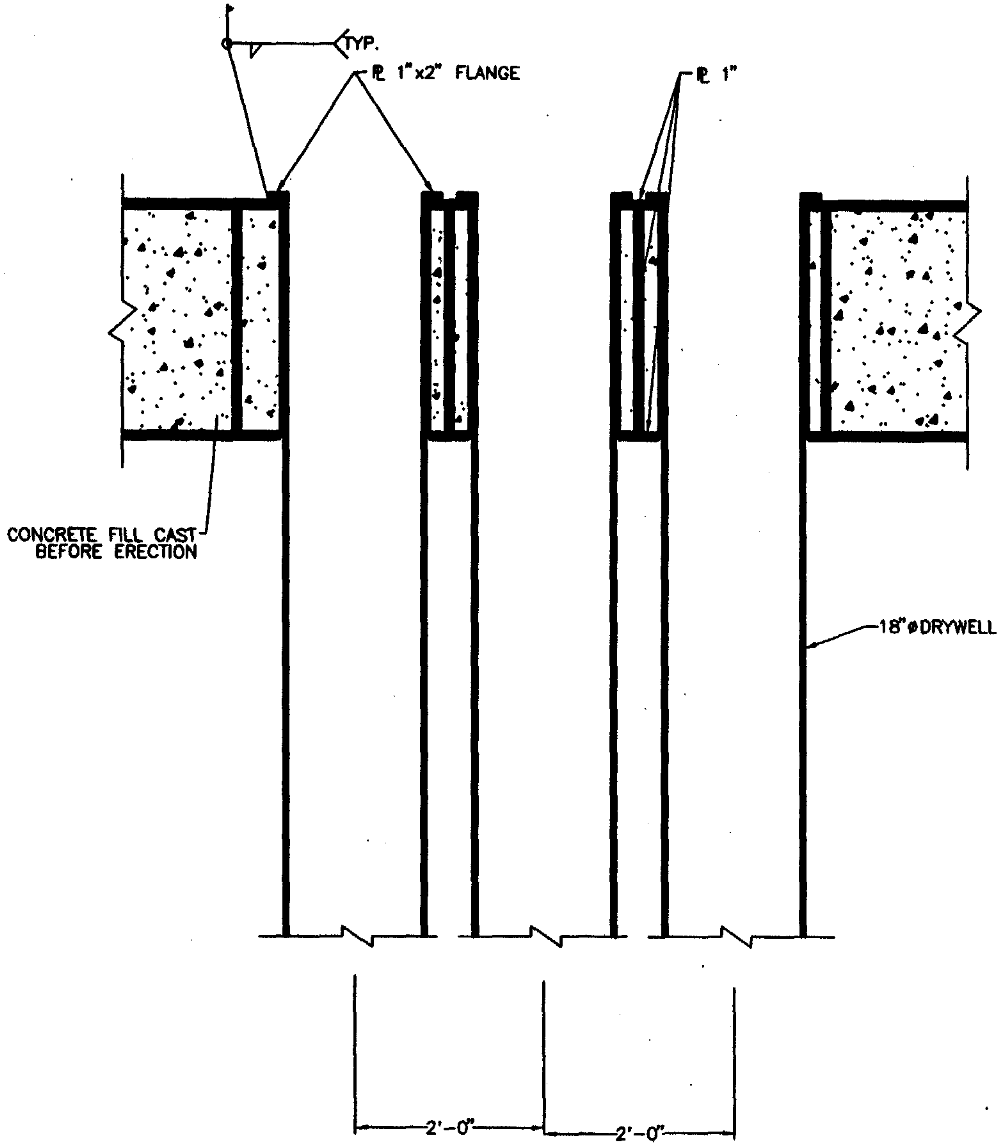

SECTION THROUGH CHARGE DECK AND DRYWELLS

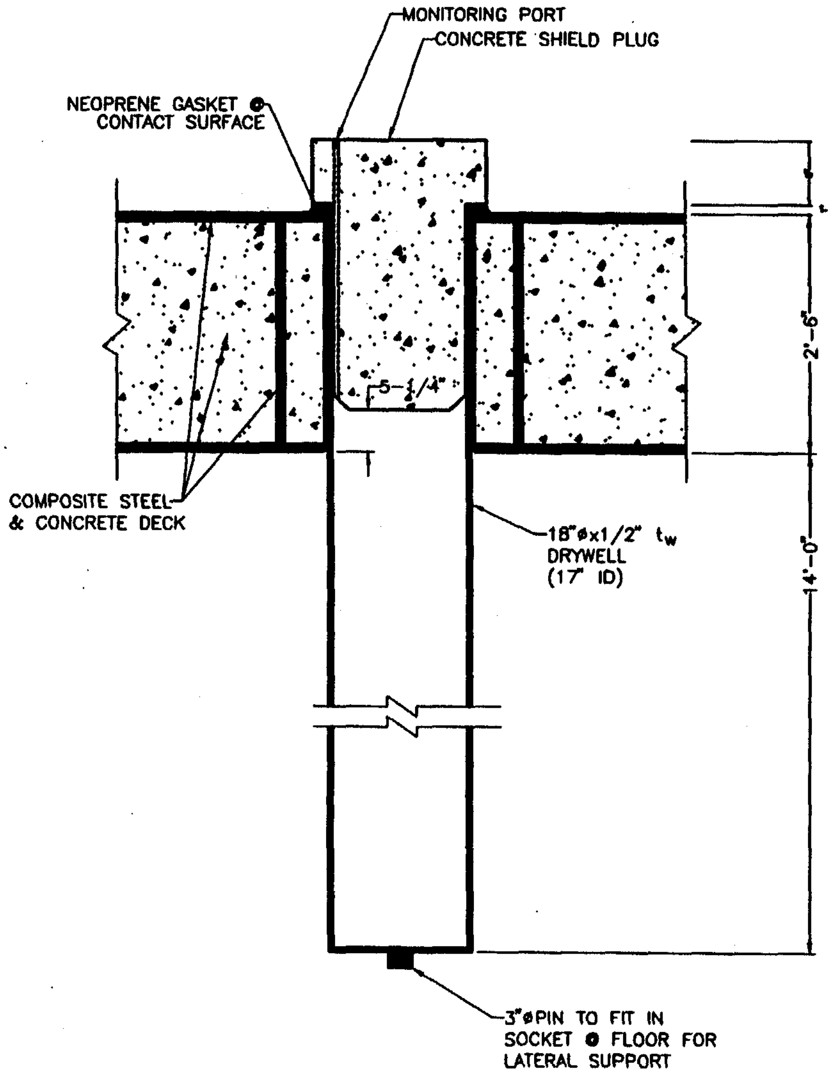

DRYWELL SECTION W/PLUG INSTALLED

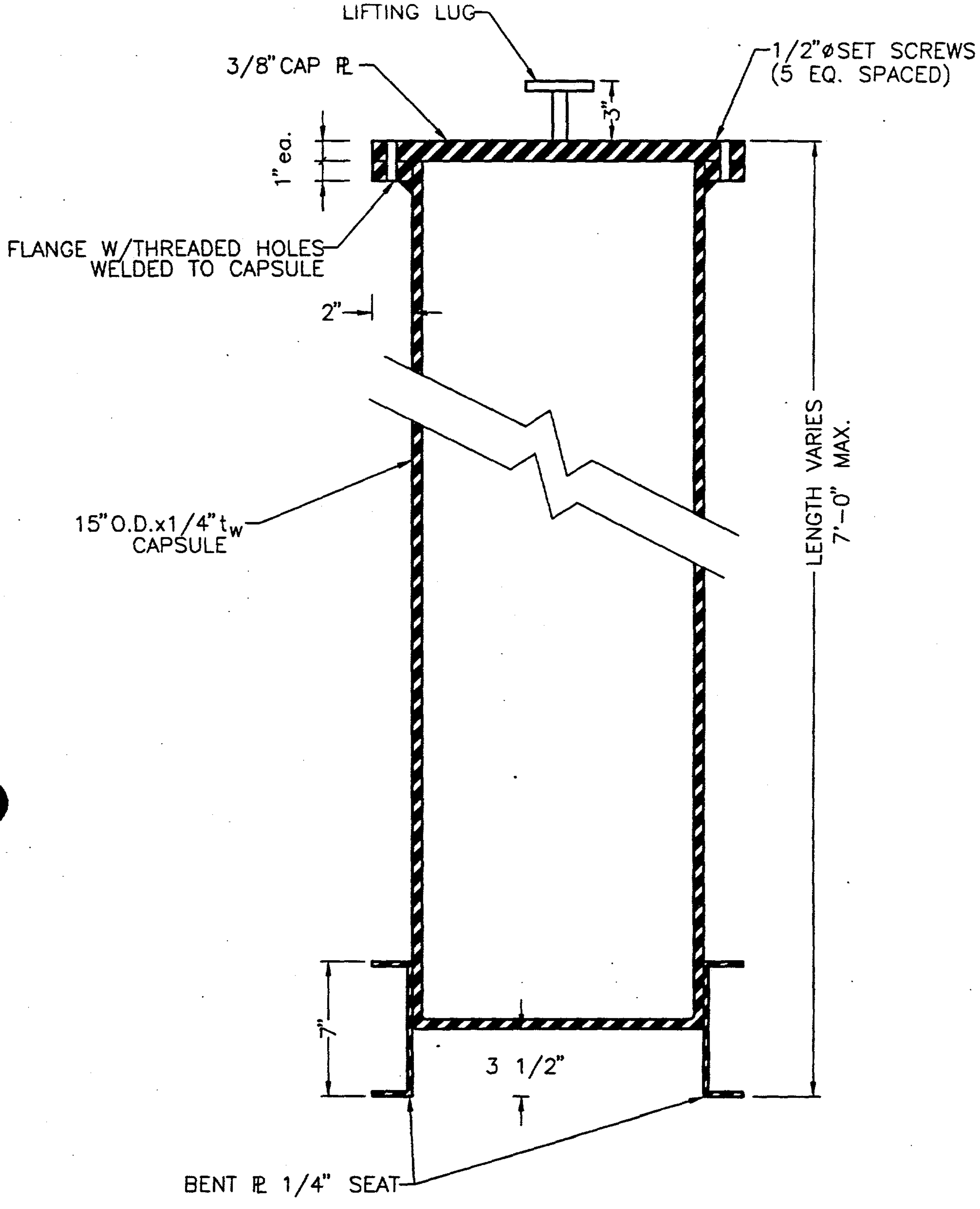

*TERTIARY CAPSULE ONLY USED
WITH 18" O.D.x1/4" WALL DRYWELL

TERTIARY CAPSULE

APPENDIX NO. 7

1. PASSIVE COOLING DRAWINGS
2. PRELIMARY CALCULATIONS

THE DRAWING PACKAGE IN THIS SECTION

HAVE BEEN INTENTIONALLY LEFT OUT.

THERMAL CALCULATIONS

(by LANL)

28 June 94

M. MERRIGAN

NMSF Passive Air System

Configuration:

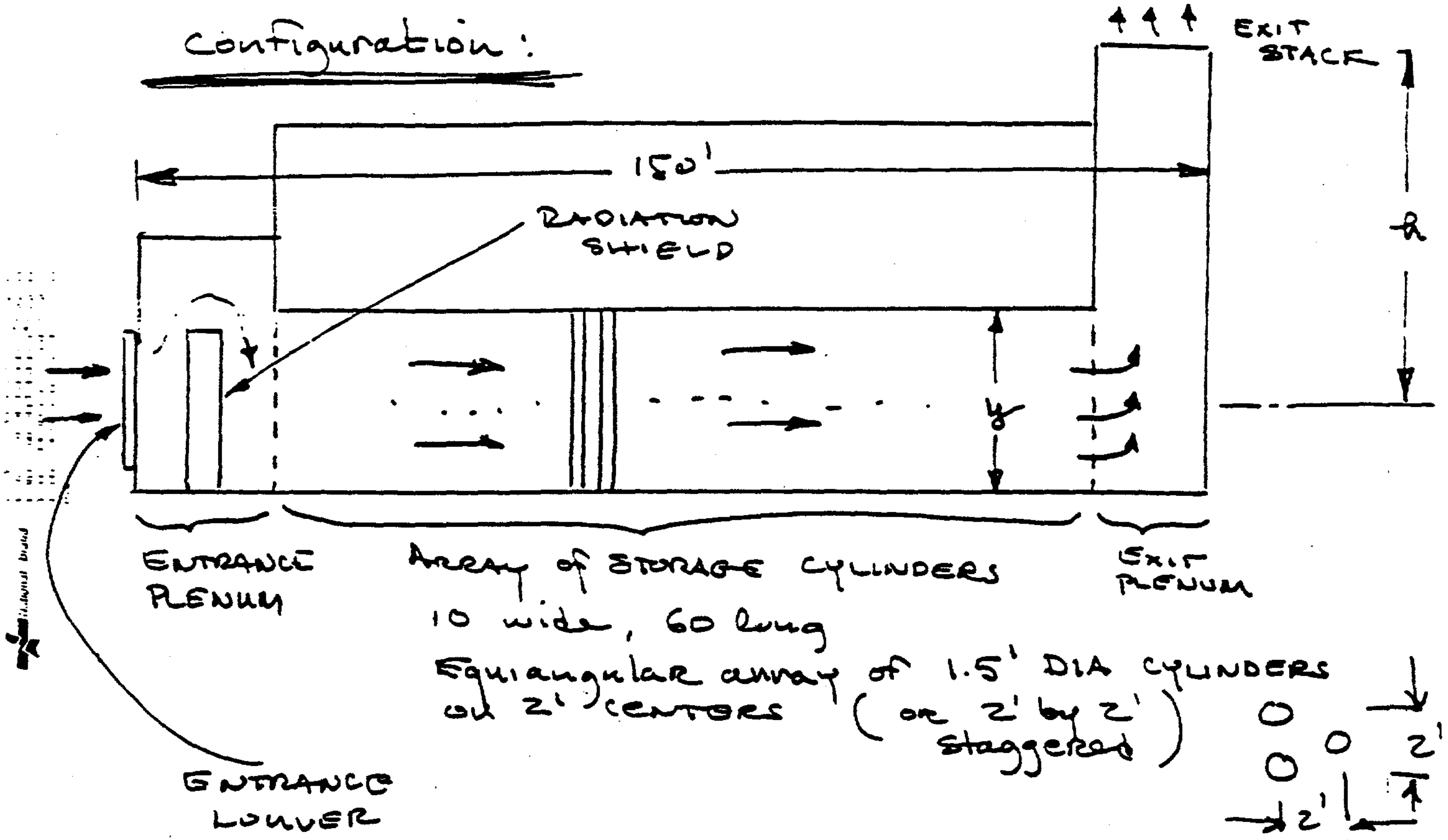

10 wide, 60 long
Equiangular array of 1.5' DIA CYLINDERS on 2' CENTERS (or 2' by 2' staggered)

GROUND RULES:

See attached memo & analysis

- PEAK ALLOWABLE MATERIAL Temperature (SURFACE) = 165°F, independent of location
- 6000 storage locations, 10/cylinder
- h = 30'
- Exit plenum 10' x 28'
- ENTRANCE LOUVERS 12' x 22'
- Cylinder length 16' (exposed)
- Max. thermal power per storage location = 13W or 130W/cylinder
- INLET Air Temp. = 89°F
- ce Hached emo & analysis → ΔT internal to cylinder = 7K at peak load. (see attached memos) (
- TOTAL VAULT THERMAL LOAD = 20 kW

NMSF Passive Air System

20 June 90
M. MERRIGAN

1. ALLOWABLE RISE IN AIR Temperature:

WITH 165°F material limit
< 12.6 °F ΔT THROUGH CONTAINER
< 15.0 °F ΔT @ SURFACE (ESTIMATED)
°F = maximum exit air temperature.

2. AVAILABLE PRESSURE HEAD

INLET AIR TEMP. = 89 °F
EXIT AIR TEMP = 137 °F
STACK HEIGHT = 30' (center of inlet to roof)

$$P_c = 0.52 (P)(h)\left(\frac{1}{T_0} - \frac{1}{T_i}\right) \text{ inches of } H_2O$$

ref. : ASHRAE Hndbk of FUNDAMENTALS
CH - 19, P 334

P = absolute pressure (psi)
h = VERTICAL HEAD BETWEEN ENTRANCE AND EXIT (FT.)
T_0 = absolute TEMP. OUTSIDE (°R)
T_i = absolute Temp. @ EXIT (°R)

$$P_c = 0.52(12)(30)\left(\frac{1}{549} - \frac{1}{597}\right)$$

P_c = 0.0270 " H_2O AVAILABLE

So sum of pressure drops through system @ in corresponding to 125°F EXIT must be < 0.0270" H_2O

0.0205 > $\sum$ ENTRANCE LOSS + AIRWAY ΔP + EXIT LOSS

NMSF PASSIVE AIR SYSTEM 28 June
M. Morris

3. MASS FLOW RATE FOR 137°F EXIT.

INLET TEMP. = 89°F ; ΔT_{air} = 48 °F

LOAD = 20 kW :

mass flow rate: $\dot{m} = \frac{\dot{Q}}{c_p \Delta T} = \frac{20(3413)}{0.24\ (48)} = 5925\ \frac{lbm}{hr}$

$\dot{m} = \frac{5925}{60} = 98.7\ \frac{lbm}{min.}$

volume flow rate: $Q = \frac{\dot{m}}{\rho} = \frac{98.7}{0.059} = 1673$ CFM

where $\rho = 0.059\ \frac{lbm}{ft^3}$ = 7000' altitude density

4. Flow area and velocity in array:

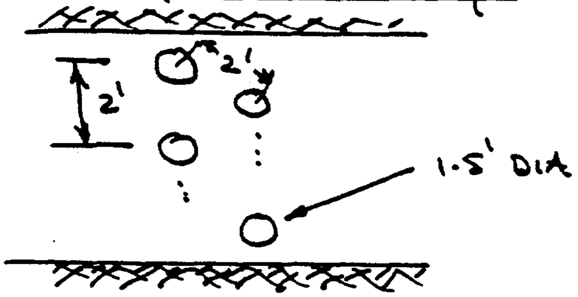

assume ½ space (1')
@ WALL - 20
channel width
2(10) + 1 = 21'
assumed 16' high.

minimum flow area = (21)(16) - (10)(1.5)(16)

A_f = 336 - 240 = 96 ft²

Corresponding flow velocity :

$V_f = \frac{1673}{96} = 11.5\ \frac{ft}{min} = 0.19\ \frac{ft}{sec}$

5. Reynold's No. (based on V_f and cylinder diameter)

$$R_e = \frac{V d \rho}{\mu} = \frac{(0.29)(1.5)(0.059)}{(1.285 \times 10^{-5})} = 1997$$

(Transition Regime)

6. Based on Re and array geometry the friction factor and heat transfer factors — From experimental correlations.

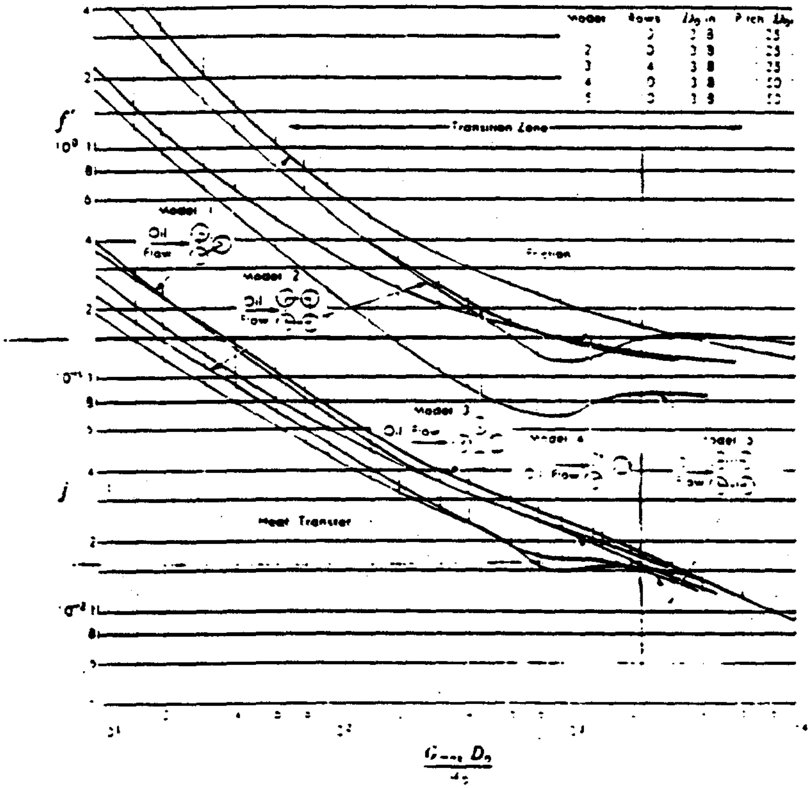

Fig. 1? Average friction and heat-transfer data for flow over five different arrangements of ¾-in.-diameter tube bundles in the laminar and transition regime. Extracted from "Heat Transfer and Fluid Friction During Flow Across Banks of Tubes," by O. P. Bergelin, G. A. Brown and S. C. Doberstein, published in Trans. ASME, Vol. 74, 1952, with permission of the publishers, The American Society of Mechanical Engineers.

where: $j = \frac{\bar{h}_c}{c_p G_{max}} Pr_b^{2/3} \left(\frac{\mu_s}{\mu_b}\right)^{0.14} \doteq 1.6 \times 10^{-2}$

and : f' = friction factor in

$$\Delta P = \frac{f' G_{max}^2 N}{\rho (2.09 \times 10^8)} \left(\frac{\mu_s}{\mu_b}\right)^{0.14}$$

N = number of transverse rows

G_{max} = mass velocity on min area $\frac{lbm}{hr\,ft^2}$

and from figure: $f' = 1.5 \times 10^{-1}$

Assume $Pr = 0.7 = \frac{c_p \mu}{k}$

$Pr^{2/3} = 0.767$

$\left(\frac{\mu_s}{\mu_b}\right)^{0.14} \approx 1.0$

$c_p = 0.24$

$G_{max} = \frac{\dot{m}}{A_{fr}} = \frac{5925}{96} = 61.7 \frac{lbm}{hr\,ft^2}$

from above:

$$h_c = \frac{j\,c_p\,G_{max}}{Pr^{2/3}\left(\frac{\mu_s}{\mu_b}\right)^{0.14}} = \frac{(1.6\times10^{-2})(0.24)(61.7)}{(0.767)(1.0)}$$

$h_c = 0.308 \frac{BTU}{hr\,ft^2\,°F}$

28 June
M. MERRIG

$$\Delta P = \frac{f' G_{max}^2 N}{\rho (2.09 \times 10^8)} \left(\frac{\mu_s}{\mu_B}\right)^{0.14}$$

$$\Delta P = \frac{(0.15)(61.7)^2 (60)(1.0)}{(0.059)(2.09 \times 10^8)} \quad \frac{lbf}{ft^2}$$

$$\Delta P = 0.0028 \ \frac{lbf}{ft^2} = \underline{\underline{0.00053 \ "H_2O}}$$

pressure drop through array.

7. ΔT from air to cylinder ($\frac{w}{}$ full load)

$h_c = 0.308 \ \frac{BTU}{hr\,ft^2\,°F}$

$A_s = \pi D h = \pi (1.5)(16) = 75 \ ft^2$
surface area of cylinder.

$\dot{Q} = 13(10) = 130 \ W = 443 \ \frac{BTU}{hr}$

$\Delta T = \frac{\dot{Q}}{hA} = \frac{443}{(0.308)(75)} = 19.1 \ °F$

15°F ≈ assumed 15 °F on p.2

and worst case cylinder will have surface temperature of

137 °F + 19.1 = 156.1 °F

giving peak material temperature of 156 + 12.6 = 168.6°F

28 Jun 94
M. Mgeric

B. Effect of free convection over cylinder

Grashof Number: $Gr = \rho^2 g \beta (T - T_\infty) L^3 \left(\frac{1}{\mu^2}\right)$

where: ρ = lbm/ft^3, μ = lbm/sec ft

$\beta = \frac{1}{R}$, L = ft, g = ft/sec^2

and for air @ 7000' altitude and 100°F

$$\left(\frac{g\beta\rho^2}{\mu^2}\right) = \left[1.76\times10^6(0.8)^2\right] = 1.126\times10^6$$

so $Gr = (1.13\times10^6)(T - T_\infty)L^3$

where $T - T_\infty = 19.2°F$
$L = 16'$

$Gr = (1.13\times10^6)(13.2)(16)^3$

$Gr = 88.8\times10^9$

and for $Re = 2686$ (ref. p.9)

$Re^2 = 7.2\times10^6$

so $Gr >> Re^2$ and flow will be free convection dominated.

for $Pr = 0.7$; $GrPr = 62.2\times10^9$ (Transition Flow)

and $Gr^{-1/4} = 1.83\times10^{-3}$

$$\frac{D}{L} = \frac{1.5}{16} = 93.7\times10^{-3} \approx 35\,Gr^{-1/4}$$

so effect of surface curvature low — use Fig 7.9 (Kreith) for Nusselt No.

28 June

M. Mem

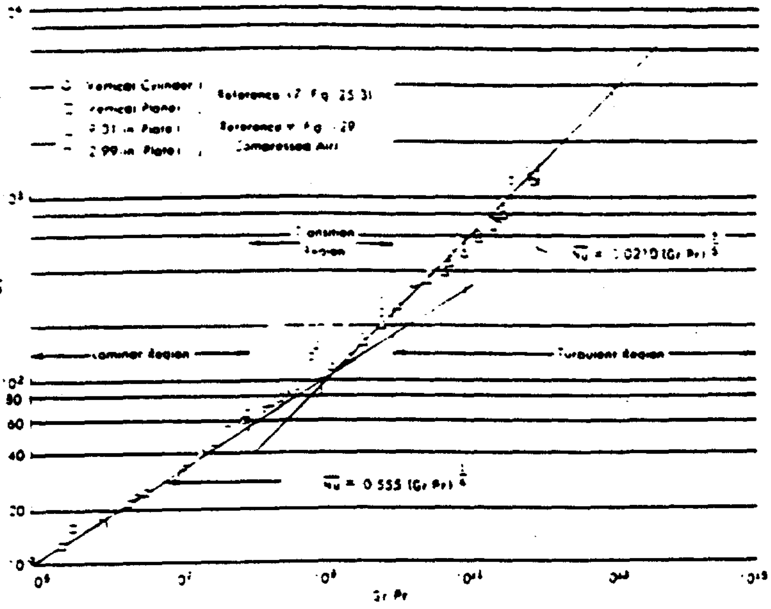

Fig. 7-4. Correlation of data for free-convection heat transfer from vertical plates and cylinders.

Ref: Kreith, Princ. of Heat Transfer p. 393

from fig. for $GrPr \approx 62.2 \times 10^9$, $Nu = 400 = \frac{hL}{k}$

$$h = 400\frac{k}{L} = \frac{400(0.0154)}{16} \ \frac{BTU}{hr\,ft^2\,°F}$$

$$h \approx 0.4 \ \frac{BTU}{hr\,ft^2\,°F}$$

so for $Q = 130\,W = 443\ BTU/hr$.

$$\Delta T = \frac{Q}{hA} = \frac{443}{(0.4)(1.5)\pi(15)} = 15.7°F$$

(assumed ΔT was 15°F, increasing to 15.7°F would have negligible effect.

∴ ΔT will probably vary from ≈14° to 16°F over cylinders depending on location. with max @ stagnation of external flow

9. Air change in bldg.

(assuming 138°F exit, $\dot{m} = 5925 \frac{lbm}{hr}$

$Q = 1673$ CFM

Volume of vault (GROSS) $\approx 180 \times 28 \times 16 + 10 \times 28 \times 16$

$= 67,200 + 4480$

$= 71,680 \text{ ft}^3$

Volume of cylinders $= 600 (1.5)^2 \frac{\pi}{4} (16)$

$= 16,964 \text{ ft}^3$

Free volume of vault = 54,715 ft³

and @ 1673 ft³/min

Time for air change $= \frac{54,715}{1673} = 32$ min

or 1.88 air changes / hr

10. VELOCITY IN EXIT PLENUM (STACK)

$$V_E = \frac{Q}{A} = \frac{1673}{(10)(28)} \frac{ft^3}{ft^2 \, min} = .97 \frac{ft}{min}$$

assume exit loss = dynamic head

@ exit $= \frac{1}{2} \rho V_E^2$

$$\Delta P = \frac{1}{2} \frac{(0.059)}{32.2} \left(\frac{5.97}{60}\right)^2 \quad \frac{lbf \, sec^2}{lbm \, ft} \cdot \frac{lbm}{ft^3} \frac{ft^2}{sec^2}$$

$$\Delta P = 9 \times 10^{-6} \frac{lbf}{ft^2} = 1.74 \times 10^{-6} \text{ " } \underline{H_2O}$$

Exit loss

28 June 94
*M. MERRIGAN

11. ENTRANCE LOSS – LOUVERS
(see attached product sheets)

assume entrance 12' × 22' (144" × 264")
and free area ≈ 90% = 230 ft²

so free area velocity = $\frac{2232}{230}$ = 3.4 ft/min

and pressure drop < 0.30001 "H_2O
(Extrapolating curve)

12. NET PRESSURE HEAD available for flow around shield.

TOTAL AVAILABLE = 0.0270 "H_2O (p2)
Loss through a-way = 0.00053 p6
EXIT LOSS = 0.000002 p9
Entrance Loss = 0.000010 p10
Net AVAILABLE = 0.0022 "H_2O

so available ΔP is adequate.
and actual flow will be greater than assumed with correspondingly lower exit temperature.

∴ Analysis shows that the natural draft flow cooling will be adequate to maintain material temperatures below ≈ 165°F.

THERMAL PROPERTIES OF CONTAINERS

(by LANL)

X-2354

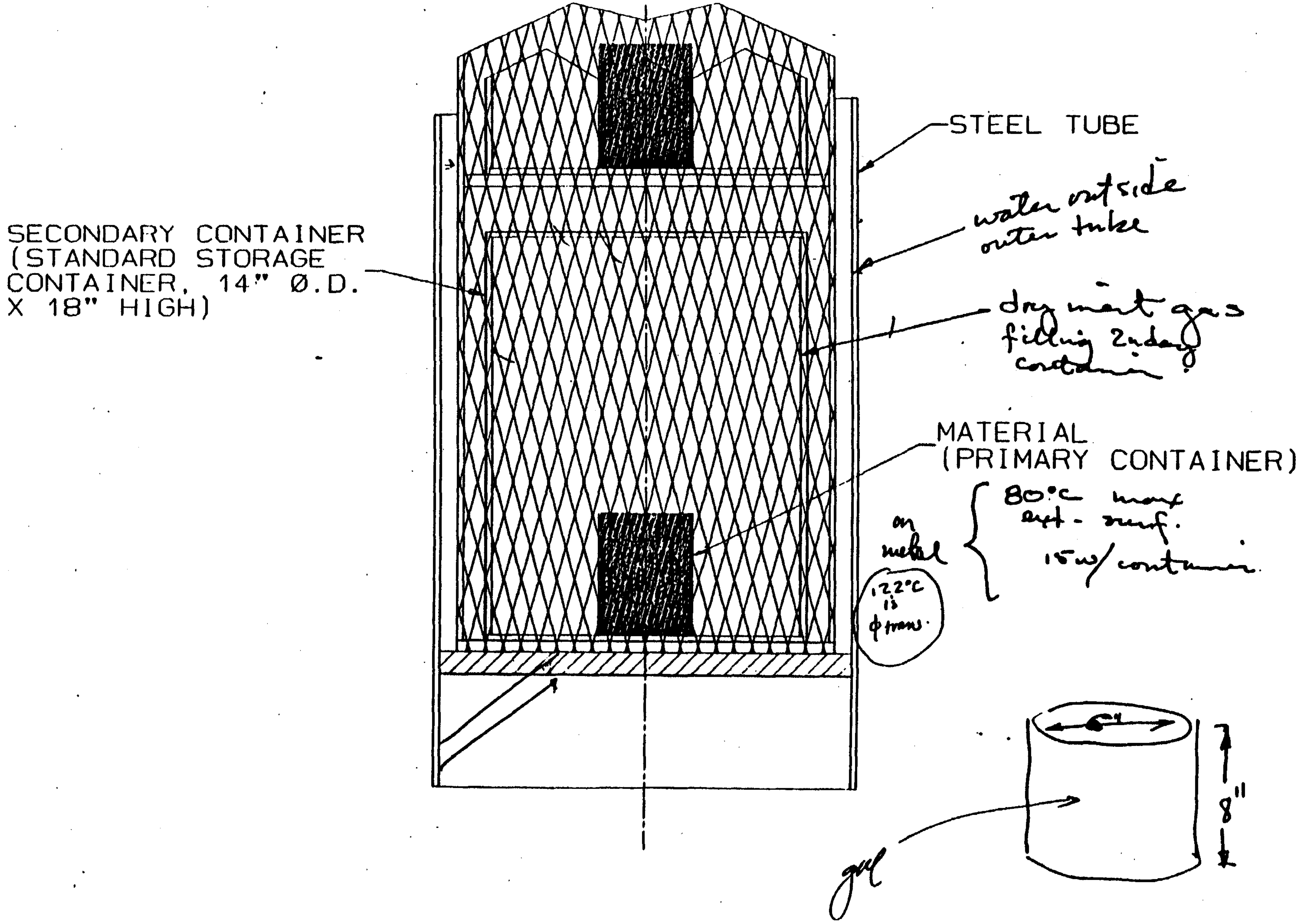
SECONDARY CONTAINER (STANDARD STORAGE CONTAINER, 14" 0.D. X 18" HIGH)
STEEL TUBE
water outside outer tube
dry inert gas filling 2ndary container
MATERIAL (PRIMARY CONTAINER)
80°C max ext. surf. 15w/container
on metal
122°C is ϕ trans.
6"
8"
gel

Project 211 Storage Facility

16 June 93

NESTED STORAGE

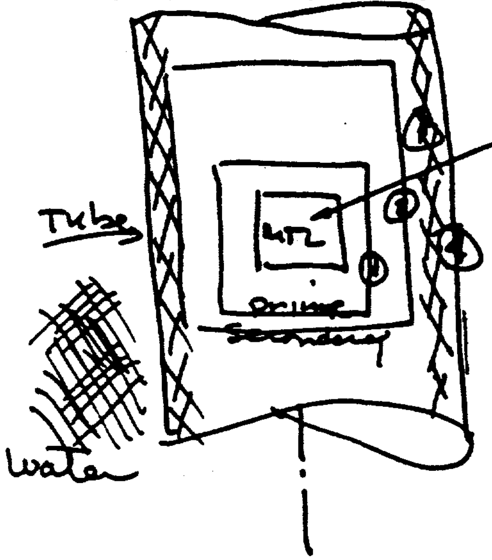

$h_g = 2.0 \frac{BTUH}{ft^2 \cdot F} = 1.13 \times 10^{-3} \frac{W}{cm^2 \cdot C}$

$h_w = 1.0 \frac{W}{cm^2 \cdot C} \approx 1500 \frac{BTUH}{ft^2 \cdot F}$

$h_w = 5.6 \times 10^{-2} \frac{W}{cm^2 C} \approx 100 \frac{BTUH}{ft^2 \cdot F}$

51 BTUH
1

Areas :

$A_1 =$ 

$= \left[\pi(6)(8) + \frac{2}{4}\pi(6)^2\right]6.45 = 1337\ cm^2$

$A_2 =$ 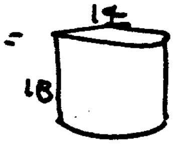

$= \left[\pi(14)(18) + 2\pi(7)^2\right]6.45 = 7091\ cm^2$

$A_4 =$ 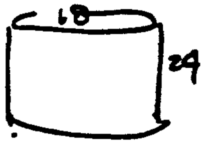

$= \left[\pi(18)(24) + \underline{\qquad}\right]6.45 = \quad 8753\ cm$

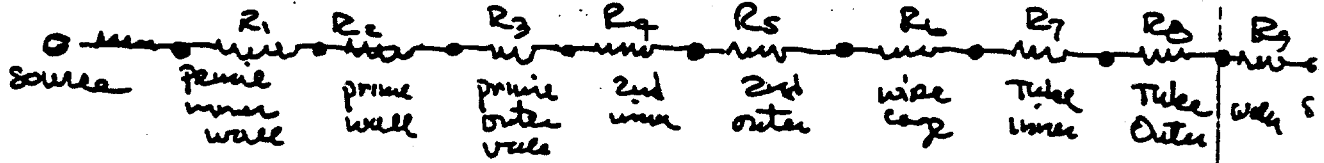

$R_1 = \frac{1}{h_1 A_1} = \frac{1}{(1.13 \times 10^{-3})(1337)} = 0.66 \frac{°C}{W}$

$R_2 = 0$

$R_3 = R_1$

$R_4 = \frac{1}{h_2 A_2} = \frac{1}{(1.13 \times 10^{-3})(7091)} = 0.12 \frac{°C}{W}$

$R_5 = R_4$

$R_6 = 0$

$R_7 = \frac{1}{(1.13 \times 10^{-3})(8753)} = 0.10$

2×10^{-3}

$R_8 = \frac{1}{\underline{\qquad}} = 1 \times 10^{-4}$

Project 21 Storage Facility 16 June 93

(2

$R_T = \sum R_i = (0.66)(2) + (0.12)(2) + 0.10 + 1\times10^{-4}$

$R_T = 1.32 + 0.24 + 0.10 + \overset{.002}{0.0001} = 1.66\ \frac{°C}{W}$

If $\dot{q} = 15W$ and $T_{source}\Big|_{lim} = 80°C$

$15 = \frac{80 - T_{water}}{R_T} = \frac{80 - T_{water}}{1.66}$

$-T_{water} = 15(1.66) - 80$

$T_{water} = 80 - 25 = 55°C = 131°F$

TOTAL $\dot{q}$ into water = $15(6)(13)(25) = 29{,}250\ W = 29.25\ KW$

Water Volume = $(26)(50)(14) = 18{,}200\ ft^3$ (If entire vol. fill assuming 1' above and below tubes

Water Mass = $18{,}200(60) = 1\times10^6\ lbm$

Adiabatic Temp Rise Rate: $\dot{q} = m\,c_p\left(\frac{\partial T}{\partial t}\right)$

$(29.25)(3.41) = 100{,}000\ BTU/H = 1\times10^6(1)\left(\frac{\partial T}{\partial t}\right)$

$\frac{\partial T}{\partial t} = 0.1\ \frac{°F}{HR} = 0.055\ \frac{°C}{HR}$

so if water is allowed to increase to ≈ 180°F (50°F ΔT) — Time required would be

$\frac{50}{0.1} = 500\ hr \approx 21$ days or 3 weeks

or if ½ vol. is water — 1½ wks

Heat Exchanger area required for water load of $\overset{100,000\ BTU/H}{30\ KW}$

Assume HP heat exchanger

NAT CONV. @ WATER TO HP.: $h_w \approx \overset{100}{1500}\ \frac{BTU/H}{ft^2\,°F}$

NAT CONV @ HP to AIR: $h_w \approx 1.0\ \frac{BTU/H}{ft^2\,°F}$

Assume max air temp = 108°F

Water temp 131°F

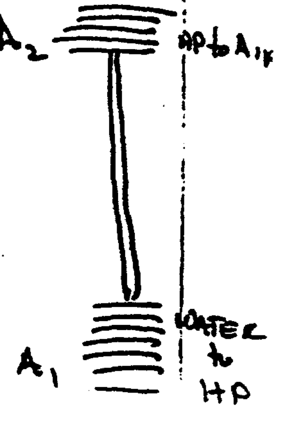

10 Jun 93

TOTAL temp difference available for HT to air = 25°F

$$R_1 = \frac{1}{h_1 A_1} = \frac{1}{(1500)\ A_1}$$

$$R_2 = \frac{1}{h_2 A_2} = \frac{1}{(1)\ A_2}$$

$R_T = R_1 + R_2 \approx R_2$

for $\Delta T_2 = 20°F$ and $q = 100{,}000$ BTUH

$$A_2 = \frac{100{,}000}{20} = 5000\ ft^2$$

Typ = 20 layers - 15' square

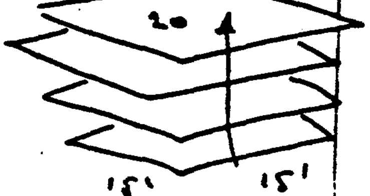

(actually Vert)

and for 5° ΔT @ water interface

$$A_1 = \frac{100{,}000}{(\underset{100}{1500})(5)} = \overset{200}{13}\ ft^2$$

for all prime surface in 2" pipe 14' long

$$A_p = \frac{\pi(2)(14)}{12} = 7.3\ ft^2$$

so only ≈ 2 heat pipes would be required at water end

or for $h_2 = 100 \frac{BTUH}{ft^2\,°F}$

$$N_p = \frac{200}{7.3} = 27$$

— for lower water coeff (h_1) with $T_w = 131°F$, $T_m = 80°C$

Conclusion:

1. Thermal loading is actually quite low. 30 KW / 18,200 ft³
2. Water makes good transfer medium and provides large thermal capacitance for power outage.
3. Passive coupling to external HX would require comparatively few heat pipes
4. If material temp. needs to be lowered increase size of inner container.
5. Should analyze convection in tank.

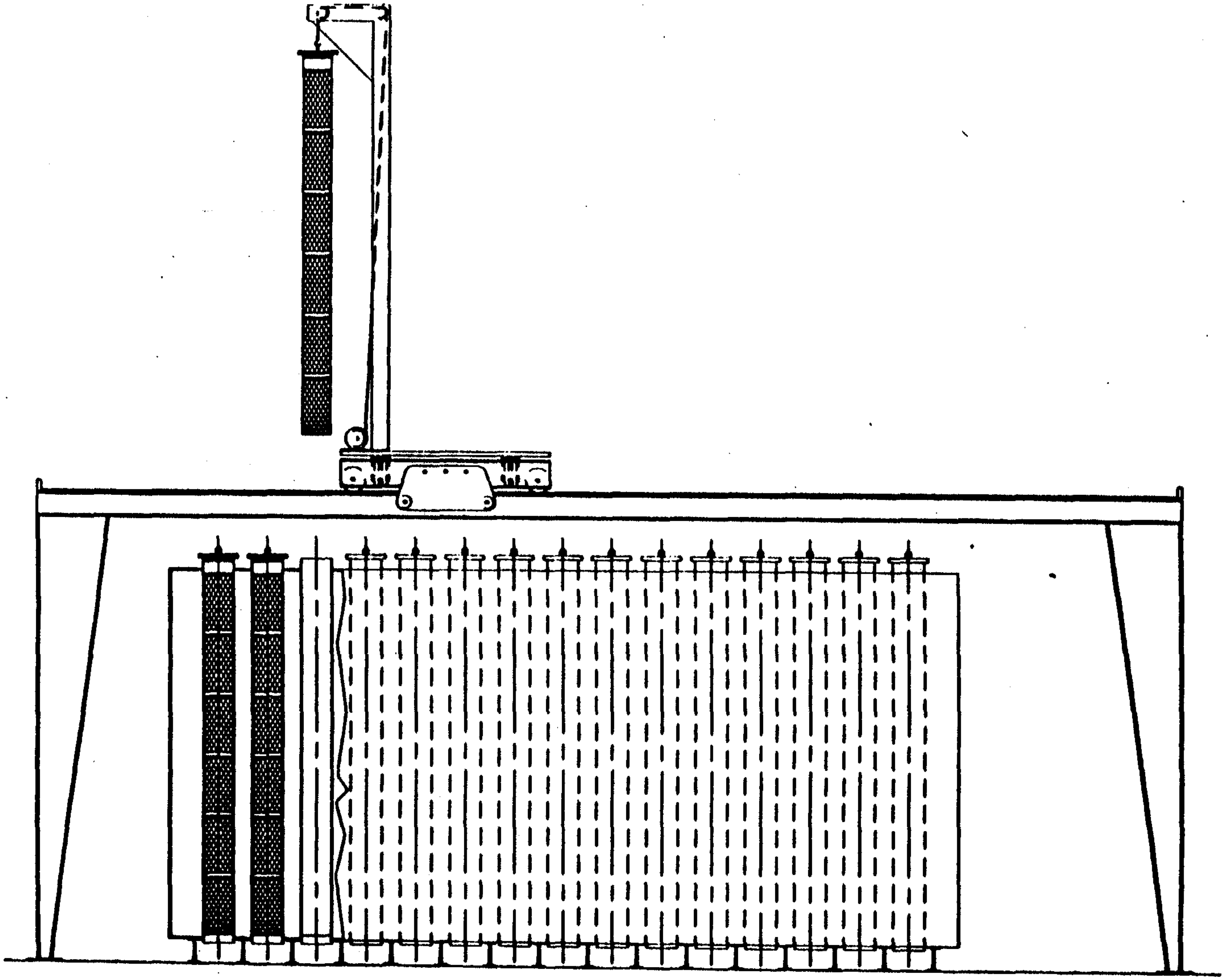

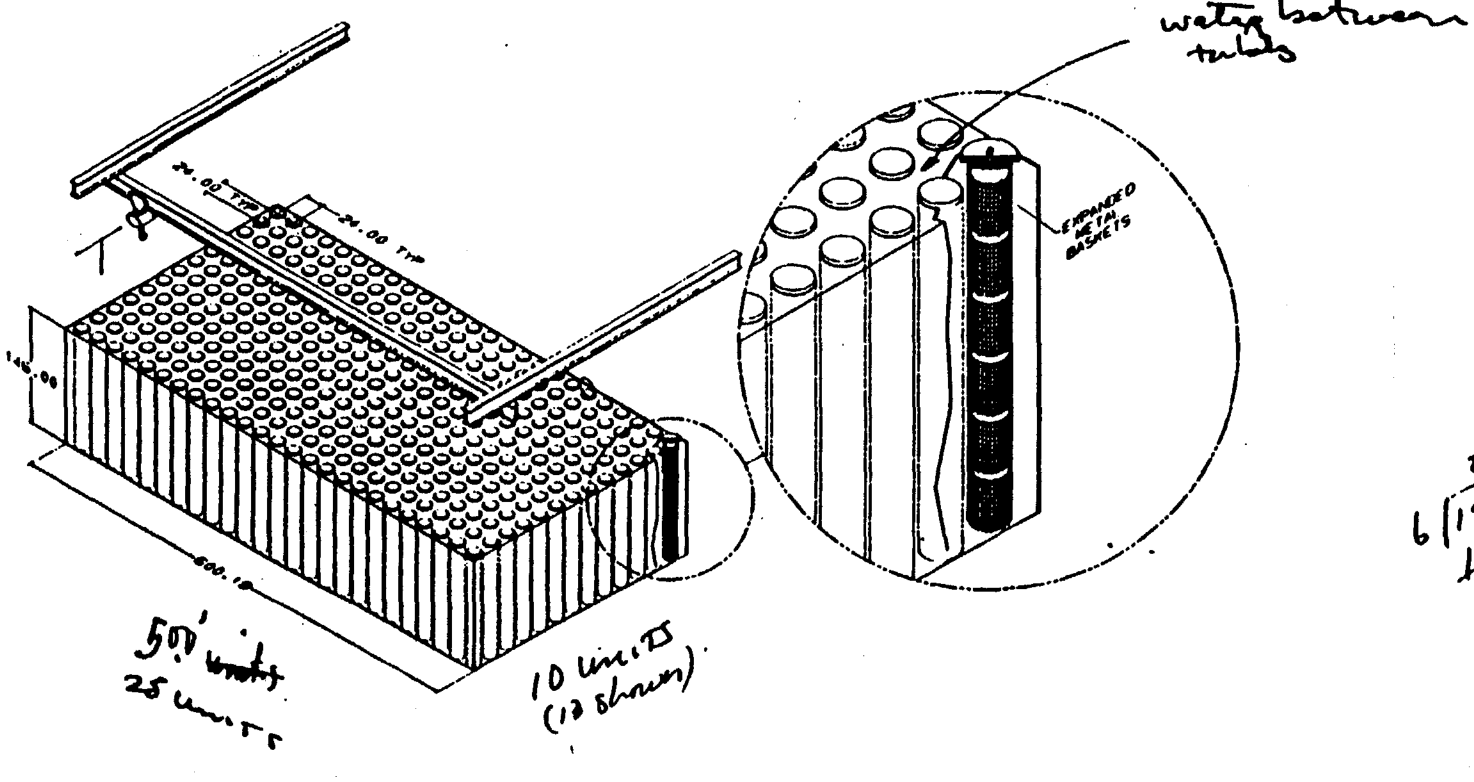

243
6 | 146
12
26
24
20

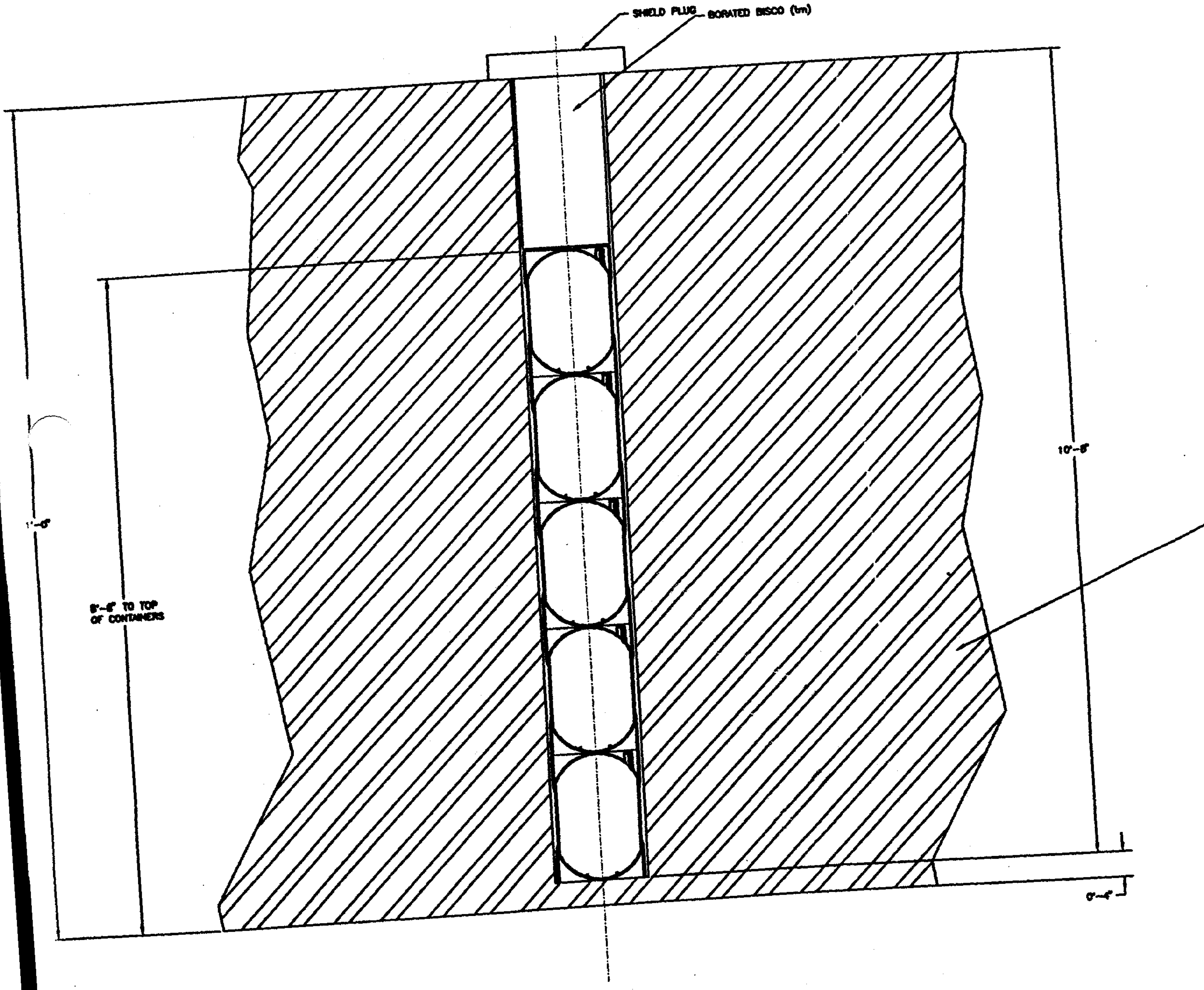
SHIELD PLUG
BORATED BISCO (tm)
1'-0"
8'-8" TO TOP OF CONTAINERS
10'-8"
0'-4"

Los Alamos, New Mexico 87544

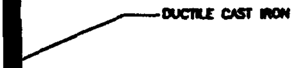

NUCLEAR MATERIAL STORAGE FACILITY

CROSS SECTION OF IRON STORAGE ARRAY

P4

Los Alamos

Los Alamos National Laboratory
Los Alamos, New Mexico 87545

PROJECT ID NO. 11818

ENG-PL 4125

NOT FOR PUBLIC DISSEMINATION

MAY CONTAIN UNCLASSIFIED CONTROLLED NUCLEAR INFORMATION "UCNI" SUBJECT TO SECTION 148 OF THE ATOMIC ENERGY ACT OF 1954, AS AMENDED (42 USC 2168). APPROVAL BY DEPARTMENT OF ENERGY PRIOR TO RELEASE IS REQUIRED

Plutonium Storage

		k_{eff}						
		Single Unit		No. of Units	Wet		Dry	
Form	Mass,kg	Bare	Reflected		18	24	18	24
Metal	6.5	0.882	0.892	3260	0.903	0.898	1.040	0.957
Metal	4.5	0.783	0.843	6175	0.858	0.863	0.919	0.874
Oxide	4.5	0.551	0.641	6175	0.656	0.652	0.697	0.641

10 units each of 6.5 kg are stored at each location.

19 units each of 4.5 kg metal and oxide are stored at each location.

Plutonium metal is 95 w% ^{239}Pu and 5 w% ^{240}Pu at 19.86 g/cc.

Plutonium oxide is 95 w% ^{239}Pu and 5 w% ^{240}Pu at 11.46 g/cc.

Plutonium Storage

13 x 25 x 1 array without water
vertical array on 18 inch centers

		k_{eff}			
		No neutron absorbers		Neutron absorber	
Form	Mass,kg	w/ conc	w/o conc	w/ conc	w/o conc
Metal	6.0 del	1.007	0.886	0.949	0.938
Metal	4.5 alp	0.968	0.875		
Oxide	2 g/cc	0.812	0.455	0.611	0.514
	4 g/cc	1.19	0.838	0.983	
Met, 6L	6.5		0.513		
4L	6.5		0.523		
6L	4.5		0.256		
4L	4.5		0.284		

APPENDIX NO. 8

PASSIVE COOLING CONSTRUCTION ESTIMATES

1. 10 HIGH OPTION
2. 6 HIGH OPTION

CONCEPTUAL ESTIMATE

PASSIVE COOLING
FLOOR PLAN NO. 1 - 10 HIGH

ITEM NO.	DESCRIPTION	WBS	QUANTITY	UNITS	UNIT COST MATERIALS	LABOR FACTOR	* LABOR RATE	LABOR TYPE	EQUIPMENT RENTAL	TOTAL COST
A.	*DEMOLITION AND BUILDING MODS*									
1.	REINFORCE INTAKE OPENING									
	STEEL LINTEL - W14X82	050	3000.00	LBS	0.50	0.010	27.93	85	0.10	2,638
	JAMBS - MC18X42.7	050	2000.00	LBS	0.50	0.010	27.93	85	0.10	1,759
	GROUT/CONCRETE	033	2.00	CY	125.00	6.600	17.02	504	68.00	611
2.	CONSTRUCT INTAKE BAFFLES	033	34.00	CY	158.00	6.600	17.02	504	68.00	11,503
3.	REINFORCE BASEMENT WALLS (18" THICK)	033	250.00	CY	158.00	6.600	17.02	504	68.00	84,583
4.	BASEMENT DEMOLITION (MIDDLE WALL)									
	DEMOLITION	021	2400.00	SQ. FT.	0.00	0.500	15.73	45	3.00	26,076
5.	BUILD EXHAUST CHASE / CHIMNEY									
	CONCRETE END WALL - FIRST FLOOR	033	38.00	CY	158.00	6.600	17.02	504	68.00	12,857
	REINFORCE ROOF OPENING	033	10.00	CY	158.00	6.600	17.02	504	68.00	3,383
	CONSRUCT ROOF VENT STRUCTURE	033	12.44	CY	158.00	6.600	17.02	504	68.00	4,210
	VENT CAP AND LOUVERS	055	1.00	EA	5000.00	16.000	17.02	504	68.00	5,340
6.	DEMOLISH FIRST FLOOR SLAB (VAULT)	021								
	DEMOLISH FIRST FLOOR SLAB	021	4650.00	SQ. FT.	0.00	0.400	15.73	45	3.00	43,208
	SAW CUT FLOOR AS NEEDED (12")	021	320.00	LF	4.10	0.350	15.73	45	9.00	5,954
	SHORE WALLS (TIEBACKS 35'@10' O.C.)	021	20.00	EA.	500.00	40.000	27.93	85	500.00	42,344
	STEEL WALERS - 2-MC18 X 42.7	021	12900.00	LBS	0.50	0.005	27.93	85	0.10	9,541
	SHORE FLOORS (PLYWOOD/SCAFFOLD)	021	4500.00	SQ. FT.	0.24	0.020	22.31	73	0.08	3,425
7.	REMOVE SHEAR WALL - FIRST FLOOR									
	DEMOLISH SHEAR WALL	021	465.00	SQ. FT.	0.00	0.500	15.73	45	3.00	5,052
	SAW CUT SHEAR WALL AT EDGES (12")	021	50.00	LF	4.10	2.200	15.73	45	9.00	2,385
8.	INSTALL TRANFER BEAM - REPLACE V WALL									
	4 FT. DEEP X 1.5 FT. WIDE X 31 FT. LONG	033	11.00	CY	158.00	6.600	17.02	504	68.00	3,722
9.	EXTERIOR STIFFENING BUTTRESS & FTG.									
	EXCAVATION	021	20.00	CY	0.00	1.000	17.80	506	5.55	467
	COMPACT	021	65.00	SQ. FT.	0.00	0.020	16.42	505	0.02	23
	BACKFILL	021	20.00	CY	0.00	0.020	16.42	505	5.55	118
	CONCRETE (FTG AND WALL)	033	40.00	CY	158.00	6.600	17.02	504	68.00	13,533
10.	NEW MEZZANINE SLAB FOR NDA AREA									
	POUR / FORM / SHORE	033	160.00	CY	158.00	5.400	17.02	504	68.00	50,865
	FINISH SLAB	033	3600.00	SQ. FT.	0.00	0.015	21.92	61	0.00	1,184
	RECONFIG. STAIRS - EA. END (MEZZ)	033	2.00	EA.	50000.00	0.000	0.00		0.00	100,000
11.	HAUL DEMOLITION RUBBLE / SPOILS									
	LOAD TRUCK	02	407.67	CY.	0.00	0.050	18.84	53	3.50	1,811
	TRAVEL TO DUMP/RT		81.53	TRIPS	0.00	2.000	17.60	49	70.00	8,577
	DUMP FEES		407.67	CY	50.00	0.000	0.00		0.00	20,383
12.	DEMOLISH ROOF - 150' X 30' X 1'									
	DEOMOLITION		4500.00	SQ. FT.	0.00	0.400	15.73	45	3.00	41,814
	SHORING - CATCH DEBRIS		4500.00	SQ. FT.	0.24	0.020	22.31	73	0.00	3,065

CONCEPTUAL ESTIMATE

PASSIVE COOLING
FLOOR PLAN NO. 1 - 10 HIGH

ITEM NO.	DESCRIPTION	WBS	QUANTITY	UNITS	UNIT COST MATERIALS	LABOR FACTOR	* LABOR RATE	LABOR TYPE	EQUIPMENT RENTAL	TOTAL COST
13.	POUR NEW ROOF AND EXTEND WALLS									
	18 INCH THK REINF. CONC. ROOF		250.00	CY.	158.00	5.400	17.02	504	68.00	79,477
	1'-6" WALLS X 4'-10". HIGH		90.00	CY.	158.00	6.600	17.02	504	68.00	30,450
14.	ENTRY/EXIT VESTIBULE 1ST FLOOR		1.00	EA.	50000.00	0.000	0.00		0.00	50,000
15.	NEW EXIT VESTIBULE - BASEMENT		1.00	EA.	50000.00	0.000	0.00		0.00	50,000
16.	ADD ELEVATOR STOP (MEZZANINE)		1.00	EA.	50000.00	0.000	0.00		0.00	50,000
	SUBTOTAL BUILDING & DEMOLITION									**$770,359**
B.	***SPECIAL FACILITES EQUIPMENT***									
1.	CHARGE FACE DECK									
	STEEL / FABRICATE DECK (1" PLATE)		420000.00	LBS	0.80	0.003	27.93	85	0.05	387,746
	FILL DECK WITH CONCRETE (SHIELDING)		3611.69	CY.	75.00	0.500	17.02	504	2.00	308,835
	SHORING		3700.00	SQ. FT.	0.24	0.020	22.31	73	0.00	2,520
	DELIVER STEEL DECKING		4.00	LOT	1000.00	0.000	0.00		0.00	4,000
	RIGGING - ERECTION THRU END WALL		1.00	EA.	0.00	160.000	27.93	85	20000.00	24,469
2.	BRIDGE CRANE		1.00	EA.	200000.00	0.000	0.00		0.00	200,000
3.	CONTAINER HANDLING MACH./ASSOC. EQUIP									
	CONTAINER HANDLING MACHINE		1.00	EA.	1000000.00	0.000	0.00		0.00	1,000,000
	PLUG PULLERS		1.00	EA.	37500.00	0.000	0.00		0.00	37,500
	SHIELDING VALVE		1.00	EA.	350000.00	0.000	0.00		0.00	350,000
4.	MATERIAL X-FER AIRLOCKS - BASEMENT		1.00	EA.	75000.00	0.000	0.00		0.00	75,000
5.	CONTAINER BASKETS		600.00	EA.	1000.00	0.000	0.00		0.00	600,000
6.	ALUMINIZED STEEL STORAGE DRYWELLS									
	18" DIA X 17'-1" LONG		600.00	EA.	2500.00	0.000	0.00		0.00	1,500,000
	SOCKETS/PINS & FASTEN TO FLOOR		600.00	EA.	75.00	0.500	15.73	45	1.56	50,655
	CONC SH'LD PLUGS (800 #/EA)		600.00	EA.	500.00	0.000	0.00		0.00	300,000
	INSTALL DRYWELLS		600.00	EA.	0.00	0.500	27.93	85	5.00	11,379
	WELD/FASTEN DRYWELLS TO DECK		600.00	EA.	3.00	3.000	27.93	85	12.00	59,274
	SUBTOTAL SPECIAL FAC. EQUIP.									**$4,911,378**
	TOTAL EST. BARE COSTS									**$5,681,737**

* FOR COMPARATIVE PURPOSES, THE LABOR RATES USED IN THIS ESTIMATE WERE EXTRACTED FROM THE CONCEPTUAL DESIGN REPORT RATHER THEN USING CURRENT PUBLISHED CRAFT LABOR RATES.

ICF KAISER ENGINEERS, INC.

JOB NO. 41552-056-00

23-May-95

CONCEPTUAL ESTIMATE

PASSIVE COOLING
FLOOR PLAN NO. 2 – 6 HIGH

ITEM	DESCRIPTION	WBS	QUANTITY	UNITS	UNIT COST MATERIALS	LABOR FACTOR	* LABOR RATE	LABOR TYPE	EQUIPMENT RENTAL	TOTAL COST
A.	*DEMOLITION AND BUILDING MODS*									
1.	REINFORCE INTAKE OPENINGS									
	STEEL LINTEL – W14X82	050	3000.00	LBS	0.50	0.010	27.93	85	0.10	2,638
	JAMBS – MC18X42.7	050	970.00	LBS	0.50	0.010	27.93	85	0.10	853
	GROUT/CONCRETE	033	2.00	CY	125.00	6.600	17.02	504	68.00	611
2.	CONSTRUCT INTAKE BAFFLES	033	34.00	CY	158.00	6.600	17.02	504	68.00	11,503
3.	SLAB OVER BAFFLES	033	61.00	CY	158.00	5.400	17.02	504	68.00	19,392
3.	ADD REINF. CONC. BRACKETS TO WALLS	033	100.00	CY	158.00	6.600	17.02	504	68.00	33,833
4.	BASEMENT DEMOLITION									
	DEMOLITION – WING WALLS	021	800.00	SQ. FT.	0.00	0.500	15.73	45	3.00	8,692
	DEMOLITION – EAST LOUVER	021	144.00	SQ. FT.	0.00	0.500	15.73	45	3.00	1,565
	SAW CUT WALL (12" THICK)	021	172.00	LF	4.10	2.200	15.73	45	9.00	8,205
5.	ADD LENGTHWISE TO MIDDLE WALLS	033	56.00	CY	158.00	6.600	17.02	504	68.00	18,947
6.	BUILD EXHAUST CHASE / CHIMNEY									
	CONCRETE END WALL – BASEMENT	033	34.00	CY	158.00	6.600	17.02	504	68.00	11,503
	CONCRETE END WALL – FIRST FLOOR	033	49.00	CY	158.00	6.600	17.02	504	68.00	16,578
	REINFORCE ROOF OPENING	033	10.00	CY	158.00	6.600	17.02	504	68.00	3,383
	CONSRUCT ROOF VENT STRUCTURE	033	13.00	CY	158.00	6.600	17.02	504	68.00	4,398
	VENT CAP AND LOUVERS	055	1.00	EA	5000.00	16.000	17.02	504	68.00	5,340
7.	NEW STAIR WAY									
	SHAFT WALLS	033	45.00	CY	158.00	6.600	17.02	504	68.00	15,225
	TOP AND BOTTOM SLABS	033	18.00	CY	158.00	5.400	17.02	504	68.00	5,722
	LANDINGS	033	11.00	CY	158.00	5.400	17.02	504	68.00	3,497
	FINISH SLABS	033	702.00	SQ. FT.	0.00	0.015	21.92	61	0.00	231
	CONCRETE STAIRS	033	2.00	EA	1000.00					2,000
	EXCAVATION	021	8.15	CY	0.00	1.000	17.80	506	5.55	190
	COMPACT	021	2808.00	SQ. FT.	0.00	0.020	16.42	505	0.02	978
	BACKFILL	021	8.15	CY	0.00	0.020	16.42	505	5.55	48
8.	DEMOILTIOIN ON FIRST FLOOR									
	DEMOLISH SHEAR WALL	021	825.00	SQ. FT.	0.00	0.500	15.73	45	3.00	8,964
	SAW CUT SHEAR WALL AT EDGES (12")	021	50.00	LF	4.10	2.200	15.73	45	9.00	2,385
	MISCELLANEOUS DEMOLITION	021	200.00	SQ. FT.	0.00	0.500	15.73	45	3.00	2,173
9.	HAUL DEMOLITION RUBBLE / SPOILS	02								
	LOAD TRUCK		407.67	CY.	0.00	0.050	18.84	53	3.50	1,811
	TRAVEL TO DUMP/RT		81.53	TRIPS	0.00	2.000	17.60	49	70.00	8,577
	DUMP FEES		407.67	CY	50.00	0.000	0.00		0.00	20,383

ICF KAISER ENGINEERS, INC. 23-May-95
JOB NO. 41552-056-00

CONCEPTUAL ESTIMATE

PASSIVE COOLING
FLOOR PLAN NO. 2 - 6 HIGH

ITEM	DESCRIPTION	WBS	QUANTITY	UNITS	UNIT COST MATERIALS	LABOR FACTOR	* LABOR RATE	LABOR TYPE	EQUIPMENT RENTAL	TOTAL COST
10.	ENTRY/EXIT VESTIBULE 1ST FLOOR		1.00	EA.	50000.00	0.000	0.00		0.00	50,000
11.	NEW EXIT VESTIBULE - BASEMENT		1.00	EA.	50000.00	0.000	0.00		0.00	50,000
12.	ADD ELEVATOR STOP (DECK LEVEL)		1.00	EA.	50000.00	0.000	0.00		0.00	50,000
	SUBTOTAL BUILDING & DEMOLITION									$369,627
B.	***SPECIAL FACILITES EQUIPMENT***									
1.	NEW DECK TO SUPPORT DRYWELLS									
	STEEL / FABRICATE DECK (1" PLATE)		600000.00	LBS	0.80	0.003	27.93	85	0.05	553,922
	FILL DECK WITH CONCRETE (SHIELDING)		6020.31	CY.	75.00	0.250	17.02	504	1.00	483,160
	SHORING		3700.00	SQ. FT.	0.24	0.020	22.31	73	0.00	2,520
	DELIVER STEEL DECKING		8.00	LOT	1000.00	0.000	0.00		0.00	8,000
	RIGGING - ERECTION THRU END WALL		1.00	EA.	0.00	160.000	27.93	85	20000.00	24,469
2.	BRIDGE CRANE		2.00	EA.	200000.00	0.000	0.00		0.00	400,000
3.	CONTAINER HANDLING MACH./ASSOC. EQUIP									
	CONTAINER HANDLING MACHINE		2.00	EA.	1000000.00	0.000	0.00		0.00	2,000,000
	PLUG PULLERS		2.00	EA.	37500.00	0.000	0.00		0.00	75,000
	SHIELDING VALVES		2.00	EA.	350000.00	0.000	0.00		0.00	700,000
4.	MATERIAL TRANSFER AIRLOCKS - BASEMENT		2.00	EA.	100000.00	0.000	0.00		0.00	200,000
5.	CONTAINER BASKETS		1000.00	EA.	1000.00	0.000	0.00		0.00	1,000,000
6.	ALUMINIZED STEEL STORAGE DRYWELLS									
	18" DIA X 11'-0" LONG		1000.00	EA.	1500.00	0.000	0.00		0.00	1,500,000
	SOCKETS/PINS - FASTEN TO FLOOR		1000.00	EA.	15.00	0.500	15.73	45	1.56	24,425
	CONCRETE SHIELDING PLUGS (850 #/EA)		1000.00	EA.	500.00	0.000	0.00		0.00	500,000
	INSTALL TUBES		1000.00	EA.	0.00	1.000	27.93	85	5.00	32,930
	WELD/FASTEN DRYWELLS TO DECK		1000.00	EA.	3.00	3.000	27.93	85	12.00	98,790
	SUBTOTAL SPECIAL FAC. EQUIP.									$7,603,217
	TOTAL EST. BARE COSTS									$7,972,844

* FOR COMPARATIVE PURPOSES, THE LABOR RATES USED IN THIS ESTIMATE WERE EXTRACTED FROM THE CONCEPTUAL DESIGN REPORT RATHER THEN USING CURRENT PUBLISHED CRAFT LABOR RATES.

APPENDIX NO. 9

ACTIVE COOLING SCHEMATIC PLANS

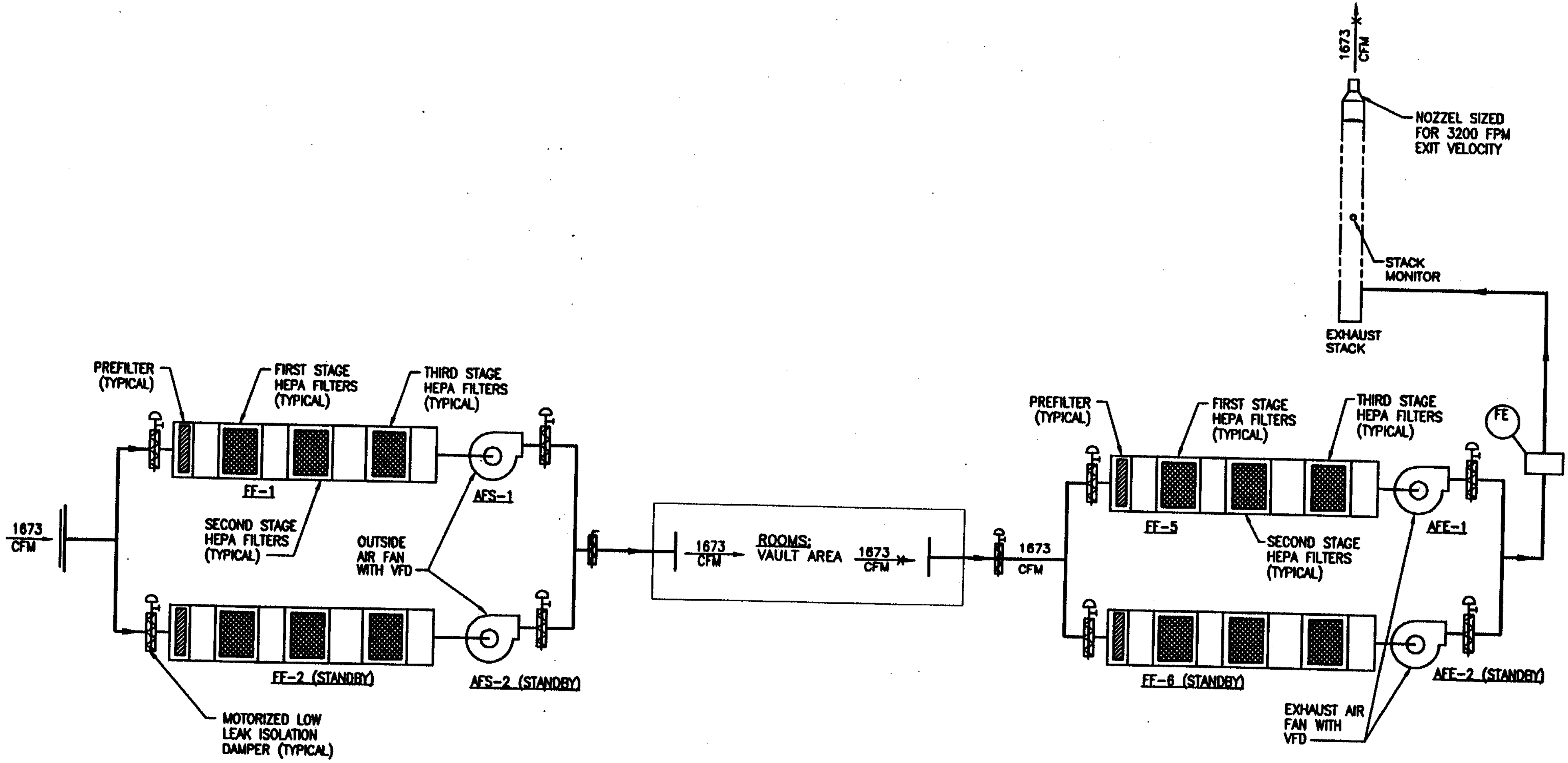

HEPA FILTERED COOLING OPTION
FLOW SCHEMATIC

Page left intentionally blank.

Page left intentionally blank.

Page left intentionally blank.

APPENDIX NO. 10

ACTIVE COOLING CONSTRUCTION ESTIMATES

1. HEPA FILTERED OPTION
2. NON-HEPA FILTERED OPTION
3. BACKUP/SUPPORTING DATA

CONCEPTUAL ESTIMATE

**ACTIVE COOLING: HEPA FILTERED
COOLING STREAM
FLOOR PLAN NO. 1 – 10 HIGH**

ITEM NO.	DESCRIPTION	WBS	QUANTITY	UNITS	UNIT COST MATERIALS	LABOR FACTOR	* LABOR RATE	LABOR TYPE	EQUIPMENT RENTAL	TOTAL COST
A.	*DEMOLITION AND BUILDING MODS*									
1.	MECHANICAL PENTHOUSE – INTAKE									
	CONC/HARDENED – 55'x30'x8'-6" clg. ht.	03								
	REINFORCE ROOF W/ CONC BEAM (2'x4'x55')		16.00	CY	158.00	6.60	17.02	504	68.00	5,413
	REINF. CONC. WALLS (170'x1'x11')		70.00	CY	158.00	6.60	17.02	504	68.00	23,683
	CONC. ROOF 1 FT. THICK		62.00	CY	158.00	5.40	17.02	504	68.00	19,710
	CONC. ROOF BEAMS (2-55'x1.5'x2.0')		15.00	CY	158.00	6.60	17.02	504	68.00	5,075
	STAIRS		1.00	EA.	1000.00					1,000
	DOOR & FRAME – 3'x7'		1.00	EA	1000.00					1,000
	MISCELLANEOUS (RAD MONITORS, ETC.)		1.00	LOT	10000.00					10,000
2.	MECHANICAL PENTHOUSE – EXHAUST									
	CONC/HARDENED – 55'x30'x8'-6" clg. ht.	03								
	REINFORCE ROOF W/ CONC BEAM (2'x4'x55')		16.00	CY	158.00	6.60	17.02	504	68.00	5,413
	REINF. CONC. WALLS (170'x1'x11')		70.00	CY	158.00	6.60	17.02	504	68.00	23,683
	CONC. ROOF 1 FT. THICK		62.00	CY	158.00	5.40	17.02	504	68.00	19,710
	CONC. ROOF BEAMS (2-55'x1.5'x2.0')		15.00	CY	158.00	6.60	17.02	504	68.00	5,075
	STAIRS		1.00	EA.	1000.00					1,000
	DOOR & FRAME – 3'x7'		1.00	EA	1000.00					1,000
	MISCELLANEOUS (RAD MONITORS, ETC.)		1.00	LOT	10000.00					10,000
3.	ISOLATION DAMPERS	15	8.00	EA.	2890.00	1.00	30.56	89	0.00	23,364
4.	HEPA FILTERS – 1000 CFM	15	24.00	EA.	250.00	0.20	30.56	89	0.00	6,147
5.	PRE FILTERS – 1000 CFM	15	16.00	EA.	10.00	0.10	30.56	89	0.00	209
6.	PRE FILTER H'SNG/TEST SECTION – 1000 CFM	15	16.00	EA.	2540.00	1.00	30.56	89	0.00	41,129
7.	HEPA FILTER HOUSING – 1000 CFM	15	24.00	EA.	2050.00	1.00	30.56	89	0.00	49,933
8.	TEST SECTION – 1000 CFM	15	24.00	EA.	1600.00	1.00	30.56	89	0.00	39,133
9.	EXHAUST AND SUPPLY FANS	15	6.00	EA.	2200.00	4.00	30.56	89	0.00	13,933
10.	INTAKE HOODS/LOUVERS	15	4.00	EA.	100.00	2.00	30.56	89	0.00	644
11.	DUCTWORK	15	4.00	LOT	500.00	4.00	30.56	89	0.00	2,489
12.	OUTSIDE AIR GRILLES – 20"x20"	15	4.00	EA.	53.00	0.50	30.56	89	0.00	273
13.	CONTROLS	15	32.00	EA.	500.00				0.00	16,000
14.	MOTORIZED DAMPERS FOR FANS	15	6.00	EA.	210.00	1.20	30.56	89	0.00	1,480

.41552-056-00

SER ENGINEERS, INC.

23-May-95

CONCEPTUAL ESTIMATE

ACTIVE COOLING: HEPA FILTERED
COOLING STREAM
FLOOR PLAN NO. 1 – 10 HIGH

ITEM NO.	DESCRIPTION	WBS	QUANTITY	UNITS	UNIT COST MATERIALS	LABOR FACTOR	* LABOR RATE	LABOR TYPE	EQUIPMENT RENTAL	TOTAL COST
15	ELECTRICAL SERVICE TO PENTHOUSES	16	2.00	LOT	3500.00					7,000
	(SEE TAKEOFF IN SUPPORTING DATA)									
16.	SEPARATOR WALL – INTAKE CHASE									
	CONCRETE END WALL – FIRST FLOOR	033	38.00	CY	158.00	6.60	17.02	504	68.00	12,857
	REINFORCE ROOF OPENING	033	10.00	CY	158.00	6.60	17.02	504	68.00	3,383
17.	SEPARATOR WALL – EXHAUST CHASE									
	CONCRETE END WALL – FIRST FLOOR	033	38.00	CY	158.00	6.60	17.02	504	68.00	12,857
	REINFORCE ROOF OPENING	033	10.00	CY	158.00	6.60	17.02	504	68.00	3,383
18.	REINFORCE BASEMENT WALLS (18" THICK)	033	250.00	CY	158.00	6.60	17.02	504	68.00	84,583
19.	BASEMENT DEMOLITION									
	DEMOLITION (MIDDLE WALL)	021	2400.00	SQ. FT.	0.00	0.50	15.73	45	3.00	26,076
20.	DEMOLISH FIRST FLOOR SLAB (VAULT)									
	DEMOLISH FIRST FLOOR SLAB	021	4650.00	SQ. FT.	0.00	0.40	15.73	45	3.00	43,208
	SAW CUT FLOOR AS NEEDED	021	320.00	LF	4.10	0.35	15.73	45	9.00	5,954
	SHORE WALLS (TIEBACKS 35@10' O.C.)	021	20.00	EA.	500.00	40.00	27.93	85	500.00	42,344
	STEEL WALERS – 2–MC18 X 42.7	021	12900.00	LBS	0.50	0.01	27.93	85	0.10	9,541
	SHORE FLOORS (PLYWOOD/SCAFFOLD)	021	4500.00	SQ. FT.	0.24	0.02	22.31	73	0.08	3,425
21.	REMOVE SHEAR WALL – FIRST FLOOR									
	DEMOLISH SHEAR WALL	021	465.00	SQ. FT.	0.00	0.50	15.73	45	3.00	5,052
	SAW CUT SHEAR WALL AT EDGES (12")	021	50.00	LF	4.10	2.20	15.73	45	9.00	2,385
22.	INSTALL TRANFER BEAM – REPLACE V WALL									
	4 FT. DEEP X 1.5 FT. WIDE X 31 FT. LONG	033	11.00	CY	158.00	6.60	17.02	504	68.00	3,722
23	EXTERIOR STIFFENING BUTTRESS & FTG.									
	EXCAVATION	021	20.00	CY	0.00	1.00	17.80	506	5.55	467
	COMPACT	021	65.00	SQ. FT.	0.00	0.02	16.42	505	0.02	23
	BACKFILL	021	20.00	CY	0.00	0.02	16.42	505	5.55	118
	CONCRETE (FTG AND WALL)	033	40.00	CY	158.00	6.60	17.02	504	68.00	13,533
24.	NEW MEZZANINE SLAB FOR NDA AREA									
	POUR / FORM / SHORE	033	160.00	CY	158.00	5.40	17.02	504	68.00	50,865
	FINISH SLAB	033	3600.00	SQ. FT.	0.00	0.02	21.92	61	0.00	1,184
	RECONFIG. STAIRS – EA. END (MEZZ)	033	2.00	EA.	50000.00	0.00	0.00		0.00	100,000
25.	HAUL DEMOLITION RUBBLE / SPOILS									
	LOAD TRUCK	02	407.67	CY.	0.00	0.05	18.84	53	3.50	1,811
	TRAVEL TO DUMP/RT		81.53	TRIPS	0.00	2.00	17.60	49	70.00	8,577
	DUMP FEES		407.67	CY	50.00	0.00	0.00		0.00	20,383
26.	DEMOLISH ROOF – 150' X 30' X 1'									

IC KAISER ENGINEERS, INC.
JOB NO. 41552-056-00

23-May-95

CONCEPTUAL ESTIMATE

ACTIVE COOLING: HEPA FILTERED
COOLING STREAM
FLOOR PLAN NO. 1 - 10 HIGH

ITEM NO.	DESCRIPTION	WBS	QUANTITY	UNITS	UNIT COST MATERIALS	LABOR FACTOR	* LABOR RATE	LABOR TYPE	EQUIPMENT RENTAL	TOTAL COST
	DEOMOLITION		4500.00	SQ. FT.	0.00	0.40	15.73	45	3.00	41,814
	SHORING - CATCH DEBRIS		4500.00	SQ. FT.	0.24	0.02	22.31	73	0.00	3,065
27.	POUR NEW ROOF AND EXTEND WALLS									
	18 INCH THK REINF. CONC. ROOF		250.00	CY.	158.00	5.40	17.02	504	68.00	79,477
	1'-6" WALLS X 4'-10". HIGH		90.00	CY.	158.00	6.60	17.02	504	68.00	30,450
28.	ENTRY/EXIT VESTIBULE 1ST FLOOR		1.00	EA.	50000.00	0.00	0.00		0.00	50,000
29.	NEW EXIT VESTIBULE - BASEMENT		1.00	EA.	50000.00	0.00	0.00		0.00	50,000
30.	ADD ELEVATOR STOP (MEZZANINE)		1.00	EA.	50000.00	0.00	0.00		0.00	50,000
	SUBTOTAL BUILDING & DEMOLITION									1,094,037
B.	***SPECIAL FACILITES EQUIPMENT***									
1.	CHARGE FACE DECK									
	STEEL / FABRICATE DECK (1" PLATE)		420000.00	LBS	0.80	0.00	27.93	85	0.05	387,746
	FILL DECK WITH CONCRETE (SHIELDING)		3611.69	CY.	75.00	0.50	17.02	504	2.00	308,835
	SHORING		3700.00	SQ. FT.	0.24	0.02	22.31	73	0.00	2,520
	DELIVER STEEL DECKING		4.00	LOT	1000.00	0.00	0.00		0.00	4,000
	RIGGING - ERECTION THRU END WALL		1.00	EA.	0.00	160.00	27.93	85	20000.00	24,469
2.	BRIDGE CRANE		1.00	EA.	200000.00	0.00	0.00		0.00	200,000
3.	CONTAINER HANDLING MACHINE & ASSOC. EQUIP									
	CONTAINER HANDLING MACHINE		1.00	EA.	1000000.00	0.00	0.00		0.00	1,000,000
	PLUG PULLERS		1.00	EA.	37500.00	0.00	0.00		0.00	37,500
	SHIELDING VALVE		1.00	EA.	350000.00	0.00	0.00		0.00	350,000
4.	MATERIAL X-FER AIRLOCKS - BASEMENT		1.00	EA.	75000.00	0.00	0.00		0.00	75,000
5.	CONTAINER BASKETS		600.00	EA.	1000.00	0.00	0.00		0.00	600,000
6.	ALUMINIZED STEEL STORAGE DRYWELLS									
	18" DIA X 17'-1" LONG		600.00	EA.	2500.00	0.00	0.00		0.00	1,500,000
	SOCKETS/PINS & FASTEN TO FLOOR		600.00	EA.	75.00	0.50	15.73	45	1.56	50,655
	CONC SH'LD PLUGS (800 #/EA)		600.00	EA.	500.00	0.00	0.00		0.00	300,000
	INSTALLATION		600.00	EA.	0.00	0.50	27.93	85	5.00	11,379
	WELD/FASTEN TO DECK		600.00	EA.	3.00	3.00	27.93	85	12.00	59,274
	SUBTOTAL SPECIAL FAC. EQUIP.									4,911,378
	TOTAL EST. BARE COSTS									6,005,416

CONCEPTUAL ESTIMATE

ACTIVE COOLING: NON-HEPA FILTERED
COOLING STREAM
FLOOR PLAN NO. 1 - 10 HIGH

ITEM NO.	DESCRIPTION	WBS	QUANTITY	UNITS	UNIT COST MATERIALS	LABOR FACTOR	* LABOR RATE	LABOR TYPE	EQUIPMENT RENTAL	TOTAL COST
A.	*DEMOLITION AND BUILDING MODS*									
1.	MECHANICAL PENTHOUSE - EXHAUST									
	STEEL FRAMAED/SIDING - 55'x15'x8'-6" clg. ht									
	REINFORCE ROOF W/ CONC BEAM									
	(1.5'x3'x55')	03	9.50	CY	158.00	6.60	17.02	504	68.00	3,214
	STEEL COLUMNS W8x24	05	2400.00	LB	0.50	0.01	27.93	85	0.10	2,110
	GIRDERS W8x18	05	3360.00	LB	0.50	0.01	27.93	85	0.10	2,954
	BAR JOISTS 8K1 @ 2' O.C.	05	1.50	TON	655.00	8.00	27.93	85	74.00	1,429
	GIRTS C8x11.5	05	6400.00	LB	0.50	0.01	27.93	85	0.10	5,628
	SIDING (STEEL/RIBBED)	05	1400.00	SF	4.00					5,600
	ROOFING (STEEL/RIBBED)	05	825.00	SF	4.00					3,300
	DOOR AND FRAME 3'x7'	05	1.00	EA.	1032.00					1,032
	STAIRS OVER BEAM	05	1.00	EA.	1000.00					1,000
2.	EXHAUST AND SUPPLY FANS	15	3.00	EA.	1014.00	4.00	30.56	89	0.00	3,409
3.	GOOSENECK INTAKE HOODS/LOUVERS	15	2.00	EA.	100.00	2.00	30.56	89	0.00	322
4.	DUCTWORK	15	1.00	LOT	500.00	4.00	30.56	89	0.00	622
5	OUTSIDE AIR GRILLES - 20"x20"	15	2.00	EA.	53.00	0.50	30.56	89	0.00	137
6.	CONTROLS	15	8.00	EA.	500.00				0.00	4,000
7.	MOTORIZED DAMPERS FOR FANS	15	3.00	EA.	210.00	1.20	30.56	89	0.00	740
8.	ELECTRICAL SERVICE TO PENTHOUSES	16	1.00	LOT	1370.00					1,370
	(SEE BACKUP TAKEOFF IN SUPPORTING DATA)									
9.	SEPARATOR WALL - INTAKE CHASE									
	CONCRETE END WALL - FIRST FLOOR	033	38.00	CY	158.00	6.60	17.02	504	68.00	12,857
	REINFORCE ROOF OPENING	033	10.00	CY	158.00	6.60	17.02	504	68.00	3,383
11.	SEPARATOR WALL - EXHAUST CHASE									
	CONCRETE END WALL - FIRST FLOOR	033	38.00	CY	158.00	6.60	17.02	504	68.00	12,857
	REINFORCE ROOF OPENING	033	10.00	CY	158.00	6.60	17.02	504	68.00	3,383
12.	REINFORCE BASEMENT WALLS (18" THICK)	033	250.00	CY	158.00	6.60	17.02	504	68.00	84,583
13.	BASEMENT DEMOLITION (MIDDLE WALL)									
	DEMOLITION	021	2400.00	SQ. FT.	0.00	0.50	15.73	45	3.00	26,076
14.	DEMOLISH FIRST FLOOR SLAB (VAULT)	021								
	DEMOLISH FIRST FLOOR SLAB	021	4650.00	SQ. FT.	0.00	0.40	15.73	45	3.00	43,208
	SAW CUT FLOOR AS NEEDED (12")	021	320.00	LF	4.10	0.35	15.73	45	9.00	5,954
	SHORE WALLS (TIEBACKS 35'@10' O.C.)	021	20.00	EA.	500.00	40.00	27.93	85	500.00	42,344
	STEEL WALERS - 2-MC18 X 42.7	021	12900.00	LBS	0.50	0.01	27.93	85	0.10	9,541

CONCEPTUAL ESTIMATE

ACTIVE COOLING: NON-HEPA FILTERED COOLING STREAM
FLOOR PLAN NO. 1 – 10 HIGH

ITEM NO.	DESCRIPTION	WBS	QUANTITY	UNITS	UNIT COST MATERIALS	LABOR FACTOR	* LABOR RATE	LABOR TYPE	EQUIPMENT RENTAL	TOTAL COST
	SHORE FLOORS (PLYWOOD/SCAFFOLD)	021	4500.00	SQ. FT.	0.24	0.02	22.31	73	0.08	3,425
15.	REMOVE SHEAR WALL – FIRST FLOOR									
	DEMOLISH SHEAR WALL	021	465.00	SQ. FT.	0.00	0.50	15.73	45	3.00	5,052
	SAW CUT SHEAR WALL AT EDGES (12")	021	50.00	LF	4.10	2.20	15.73	45	9.00	2,385
16.	INSTALL TRANFER BEAM – REPLACE V WALL									
	4 FT. DEEP X 1.5 FT. WIDE X 31 FT. LONG	033	11.00	CY	158.00	6.60	17.02	504	68.00	3,722
17.	EXTERIOR STIFFENING BUTTRESS & FTG.									
	EXCAVATION	021	20.00	CY	0.00	1.00	17.80	506	5.55	467
	COMPACT	021	65.00	SQ. FT.	0.00	0.02	16.42	505	0.02	23
	BACKFILL	021	20.00	CY	0.00	0.02	16.42	505	5.55	118
	CONCRETE (FTG AND WALL)	033	40.00	CY	158.00	6.60	17.02	504	68.00	13,533
18.	NEW MEZZANINE SLAB FOR NDA AREA									
	POUR / FORM / SHORE	033	160.00	CY	158.00	5.40	17.02	504	68.00	50,865
	FINISH SLAB	033	3600.00	SQ. FT.	0.00	0.02	21.92	61	0.00	1,184
	RECONFIG. STAIRS – EA. END (MEZZ)	033	2.00	EA.	50000.00	0.00	0.00		0.00	100,000
19.	HAUL DEMOLITION RUBBLE / SPOILS									
	LOAD TRUCK	02	407.67	CY.	0.00	0.05	18.84	53	3.50	1,811
	TRAVEL TO DUMP/RT		81.53	TRIPS	0.00	2.00	17.60	49	70.00	8,577
	DUMP FEES		407.67	CY	50.00	0.00	0.00		0.00	20,383
20.	DEMOLISH ROOF – 150' X 30' X 1'									
	DEOMOLITION		4500.00	SQ. FT.	0.00	0.40	15.73	45	3.00	41,814
	SHORING – CATCH DEBRIS		4500.00	SQ. FT.	0.24	0.02	22.31	73	0.00	3,065
21.	POUR NEW ROOF AND EXTEND WALLS									
	18 INCH THK REINF. CONC. ROOF		250.00	CY.	158.00	5.40	17.02	504	68.00	79,477
	1'-6" WALLS X 4'-10". HIGH		90.00	CY.	158.00	6.60	17.02	504	68.00	30,450
22.	ENTRY/EXIT VESTIBULE 1ST FLOOR		1.00	EA.	50000.00	0.00	0.00		0.00	50,000
23.	NEW EXIT VESTIBULE – BASEMENT		1.00	EA.	50000.00	0.00	0.00		0.00	50,000
24.	ADD ELEVATOR STOP (MEZZANINE)		1.00	EA.	50000.00	0.00	0.00		0.00	50,000
	SUBTOTAL BUILDING & DEMOLITION									797,405
B.	*SPECIAL FACILITES EQUIPMENT*									
1.	CHARGE FACE DECK									
	STEEL / FABRICATE DECK (1" PLATE)		420000.00	LBS	0.80	0.00	27.93	85	0.05	387,746
	FILL DECK WITH CONCRETE (SHIELDING)		3611.69	CY.	75.00	0.50	17.02	504	2.00	308,835
	SHORING		3700.00	SQ. FT.	0.24	0.02	22.31	73	0.00	2,520
	DELIVER STEEL DECKING		4.00	LOT	1000.00	0.00	0.00		0.00	4,000

CONCEPTUAL ESTIMATE

ACTIVE COOLING: NON-HEPA FILTERED
COOLING STREAM
FLOOR PLAN NO. 1 – 10 HIGH

ITEM NO.	DESCRIPTION	WBS	QUANTITY	UNITS	UNIT COST MATERIALS	LABOR FACTOR	* LABOR RATE	LABOR TYPE	EQUIPMENT RENTAL	TOTAL COST
	RIGGING – ERECTION THRU END WALL		1.00	EA.	0.00	160.00	27.93	85	20000.00	24,469
2.	BRIDGE CRANE		1.00	EA.	200000.00	0.00	0.00		0.00	200,000
3.	CONTAINER HANDLING MACHINE & ASSOC. EQUIP									
	CONTAINER HANDLING MACHINE		1.00	EA.	1000000.00	0.00	0.00		0.00	1,000,000
	PLUG PULLERS		1.00	EA.	37500.00	0.00	0.00		0.00	37,500
	SHIELDING VALVE		1.00	EA.	350000.00	0.00	0.00		0.00	350,000
4.	MATERIAL X-FER AIRLOCKS – BASEMENT		1.00	EA.	75000.00	0.00	0.00		0.00	75,000
5.	CONTAINER BASKETS		600.00	EA.	1000.00	0.00	0.00		0.00	600,000
6.	ALUMINIZED STEEL STORAGE DRYWELLS									
	18" DIA X 17'-1" LONG		600.00	EA.	2500.00	0.00	0.00		0.00	1,500,000
	SOCKETS/PINS & FASTEN TO FLOOR		600.00	EA.	75.00	0.50	15.73	45	1.56	50,655
	CONC SH'LD PLUGS (800 #/EA)		600.00	EA.	500.00	0.00	0.00		0.00	300,000
	INSTALLATION		600.00	EA.	0.00	0.50	27.93	85	5.00	11,379
	WELD/FASTEN TO DECK		600.00	EA.	3.00	3.00	27.93	85	12.00	59,274
	SUBTOTAL SPECIAL FAC. EQUIP.									4,911,378
	TOTAL EST. BARE COSTS									5,708,783

COST ESTIMATING TAKEOFF FORM

JOB TITLE: NMSF

NAME: C. QUARTIERI DATE: 12/14/94

ESTIMATE DESCRIPTION: ALTERNATIVE #1

JOB #: 41552-056

ICF KAISER ENGINEERS 1900 Diamond Drive Los Alamos, New Mexico 87544

ITEM #	CSI WBS	DESCRIPTION	QTY.	UNITS	MATERIALS (COST/UNIT)	MAN HRS PER UNIT	LABOR ID	EQUIP. RENTAL
1.	15	PROPELLER EXHAUST FANS 1/4 HP, 1673 CFM	3	EA	$1014	4	1	
2.	15	GOOSENECK AIR INTAKE HOOD	2	EA	$100.00	2		
3.	15	DUCTWORK	1	LOT	$300.00	4		
4.	15	OUTSIDE AIR GRILLES 20" X 20"	2	EA	$53.50	.5		
5.	15	CONTROLS (500.00/DEVISE)	8	EA	$500.00			
6.	15	MOTORIZED DAMPERS FOR FANS	3	EA	$210.00	1.2		

COMMENTS:

ESTIMATE TAKE OFF SHEET

NON-HEPA

Prepared By: DV	Project Number: JOB NO. 41562-056-00	Location: NMSF	Page No. 1 o 1
Approved By:	Project Description: NUCLEAR MATERIALS STORAGE FACILITY LANL PI NO. 11818		Class of Estimate: ☒ Conceptual ☐ Design Criteria ☐ Title I ☐ Bid or Title II
Date: 12/14/94			

Item No.	Item ELECTRICAL	Unit of Measure	Quantity	Material		Labor			
				Unit Cost	Total Mat'l Cost	Hours Per Unit	Hours Total Units	Cost Per Unit	Total Labor Cost
	PROVIDE POWER TO 1/4 HP FANS								
1	#12 THHN/THWN	LF	300	0.08	24.00	0.007	2.19	27.5	60.23
2	CONDUIT, 3/4" EMT	LF	75	0.3	22.50	0.061	4.575	27.5	125.81
3	MOTOR STARTERS	EA	3	115	345.00	2.29	6.87	27.5	188.93
4	MOTOR CONNECTION	EA	3	—	—	0.4	1.2	27.5	33.00
5	NON-FUSIBLE DISCONNECT SWITCH	EA	3	33.08	99.24	2.61	7.83	27.5	215.33
6	MISCELLANEOUS FITTINGS	LOT	1	200	200.00	2	2	27.5	55.00
					690.74				[illegible]
						$\underbrace{\hspace{6em}}_{1369.04}$			
	Effective Date of this estimate: 12/94		Bare System Costs		$691		25		$678

COST ESTIMATING TAKEOFF FORM

10.-

JOB TITLE: NMSF

NAME: DKOF

DATE: 2/95

ESTIMATE DESCRIPTION: HEPA FILTERED OPTION

JOB #: 41552-056-00

ICF KAISER ENGINEERS 1900 Diamond Drive
Los Alamos, New Mexico 87544

ITEM #	CSI WBS	DESCRIPTION	QTY.	UNITS	MATERIALS (COST/UNIT)	MAN HRS PER UNIT	LABOR ID	EQUIP. RENTAL
		BUILD MECH. PENTHOUSES TO HOUSE HEPA FILTERS AND HOUSINGS (30x55)	2	ea				
1.		REINFORCE ROOF w/ BEAM 24" x 48" x 55 FT.	16	cy	158.00	6.60	17.02	68
2.		REINF. CONC. WALLS 170 LF x 12" x 11	70	cy	158.00	6.60	17.02	68
3.		REINF. CONC. ROOF (55 x 30)	62	cy	158.00	5.40	17.02	68
4		CONC. ROOF BEAMS (2@ 55 FTx18" w x 24" DEEP)	15	cy	158.00	6.60	17.02	68
5.		STAIRS	1	ea	1000	–	–	–
6.		DOOR	2	ea	1000	–	–	–
7.		MISCELLANEOUS	1	LOT	10,000			

COMMENTS:

COST ESTIMATING TAKEOFF FORM

2 of

JOB TITLE: NMSF
NAME: CQ
DATE: 2/95
ESTIMATE DESCRIPTION: HEPA FILTERED OPTION
JOB #: 41552-056

ICF KAISER ENGINEERS 1900 Diamond Drive Los Alamos, New Mexico 87544

ITEM #	CSI WBS	DESCRIPTION	QTY.	UNITS	MATERIALS (COST/UNIT)	MAN HRS PER UNIT	LABOR ID	EQUIP. RENTAL
1.	15	ISOLATION DAMPERS	2	EA	2890^{00}	1	5780	60
2.	15	HEPA FILTERS/1000 CFM	6	EA	250^{00}	0.2	1500	36
3.	15	PRE FILTERS/1000 CFM	4	EA	10^{00}	0.1	40	12
4.	15	PRE FILTER HOUSING & TEST SECTION/1000 CFM	2	EA	2540^{00}	1	5080	60
5.	15	HEPA FILTER HOUSING/1000 CFM	6	EA	2050^{00}	1	4100	180
6.	15	TEST SECTION/1000 CFM	2	EA	1600^{00}	1	3200	60
7.	15	UTILITY SET EXHAUST FANS	3	EA	$\$2200^{00}$	4	6600	360
8.	15	ITEM INCLUDES ITEM #'S 2 THRU 6 FROM ALTERNATIVE #1	1	LOT	5,537	7.7	5537	231
							31,837	999
							3 1	1
							32,836	
						ELEC	+ 36,231	

COMMENTS:

BILL RADZINSKI 7-2116

ESTIMATE TAKE OFF SHEET

HEPA FILTERED

Prepared By: DV
Project Number: JOB NO. 41882-086-00
Location: NMSF
Page No. 1 of 1
Approved By:
Project Description: NUCLEAR MATERIALS STORAGE FACILITY LANL PI NO. 11818
Date: 12/20/94
Class of Estimate:
☒ Conceptual
☐ Design Criteria
☐ Title I
☐ Bid or Title II

				Material		Labor			
Item No.	Item ELECTRICAL	Unit of Measure	Quantity	Unit Cost	Total Mat'l Cost	Hours Per Unit	Hours Total Units	Cost Per Unit	Total Labor Cost
	PROVIDE POWER TO 5 HP FANS								
1	#12 THHN/THWN	LF	400	0.08	32.00	0.007	2.92	27.5	80.30
2	CONDUIT, 3/4" EMT	LF	75	0.3	22.50	0.061	4.575	27.5	125.81
3	MOTOR STARTERS	EA	3	579	1737.00	5	15	27.5	412.50
4	MOTOR CONNECTION	EA	3	---	---	0.4	1.2	27.5	33.00
5	NON-FUSIBLE DISCONNECT SWITCH	EA	3	147	441.00	3.1	9.3	27.5	255.75
6	MISCELLANEOUS FITTINGS	LOT	1	200	200.00	2	2	27.5	55.00
	Effective Date of This Estimate: 12/94		Bare System Costs		$2,433		35		$962

APPENDIX NO. 11

ACTIVE COOLING LIFE CYCLE COSTS AND SUPPORTING CALCULATIONS

COMPARATIVE PRESENT-VALUE COSTS OF ALTERNATIVE PROJECTS
(Shown in ascending order of initial cost, * = lowest LCC)

PROJECT ALTERNATIVE	LCC FILENAME	INITIAL COST (PV)	LIFE CYCLE COST (PV)
PASSIVE	NMSF	$842,695	$842,695*
ACTIVE	NMSF1	$872,280	$900,332
ACTIVE HEPA	NMSF2	$1,196,765	$1,384,636

```
NIST BLCC: COMPARATIVE ECONOMIC ANALYSIS (version 4.20-95)

     BASE CASE: PASSIVE
     ALTERNATIVE: ACTIVE

     PRINCIPAL STUDY PARAMETERS:
     ---------------------------
     ANALYSIS TYPE: Federal Analysis--Energy Conservation Projects
     STUDY PERIOD:          25.00 YEARS (DEC 1994 THROUGH NOV 2019)
     PLAN/CONSTR. PERIOD:    4.67 YEARS (DEC 1994 THROUGH JUL 1999)
     SERVICE PERIOD:        20.33 YEARS (AUG 1999 THROUGH NOV 2019)
     DISCOUNT RATE:   3.0% Real (exclusive of general inflation)
     BASE CASE LCC FILE:    NMSF.LCC
     ALTERNATIVE LCC FILE: NMSF1.LCC

              COMPARISON OF PRESENT-VALUE COSTS

                                        BASE CASE:    ALTERNATIVE:   SAVINGS
                                        PASSIVE       ACTIVE         FROM ALT.
INITIAL INVESTMENT ITEM(S):             ------------  ------------  ------------
 CASH REQUIREMENTS AS OF SERVICE DATE     $842,695      $872,280      -$29,586
                                          ---------     ---------     ---------
    SUBTOTAL                              $842,695      $872,280      -$29,586
FUTURE COST ITEMS:
 ANNUAL AND NON-AN. RECURRING COSTS             $0        $8,235       -$8,235
 ENERGY-RELATED COSTS                           $0        $1,700       -$1,700
 REPLACEMENTS TO CAPITAL                        $0       $18,116      -$18,116
                                          ---------     ---------     ---------
    SUBTOTAL                                    $0       $28,051      -$28,051
                                          ---------     ---------     ---------
   TOTAL P.V. LIFE-CYCLE COST             $842,695      $900,332      -$57,637

   NET SAVINGS FROM ALTERNATIVE ACTIVE COMPARED TO ALTERNATIVE PASSIVE

       Net Savings  =  P.V. of non-investment savings      -$9,935
                    -  Increased total investment          $47,702
                                                       -------------
                                       Net Savings:       -$57,637

   Note: the SIR and AIRR computations include differential initial costs,
   capital replacement costs, and resale value (if any) as investment costs,
   per NIST Handbook 135 (Federal and MILCON analyses only).

    Can't compute meaningful SIR and AIRR for the Alternative Case because
    its incremental investment is positive and total savings are negative.
         This project alternative IS NOT cost effective.

      ESTIMATED YEARS TO PAYBACK (FROM BEGINNING OF SERVICE PERIOD)

          Simple Payback never reached during study period
          Discounted Payback never reached during study period

                       ENERGY SAVINGS SUMMARY

Energy         Units    -------- Annual Consumption ---------  Life-Cycle
 type                    Base Case   Alternative   Savings     Savings
-------------- -------- ----------- ----------- ----------- ----------
Electricity    kWh               0       1,752      -1,752     -35,624

                    EMISSIONS REDUCTION SUMMARY

 nergy          --- Annual Emissions ---     Annual      Life-Cycle
 ype            Base Case   Alternative    Reduction     Reduction
-------------- ------------ ------------ -----------   ------------
 ctricity:
  (Kg):              0.0       1,017.7      -1,017.7      -20,693.4
 Ox (Kg):            0.0           8.6          -8.6          -84.1
 NOx (Kg):           0.0           4.4          -4.4          -88.8
Total:
```

CO2 (Kg):	0.0	1,017.7	-1,017.7	-20,693.4
SOx (Kg):	0.0	8.6	-8.6	-84.1
NOx (Kg):	0.0	4.4	-4.4	-88.8

```
NIST BLCC: COMPARATIVE ECONOMIC ANALYSIS (version 4.20-95)

     BASE CASE: PASSIVE
     ALTERNATIVE: ACTIVE HEPA

     PRINCIPAL STUDY PARAMETERS:
     ---------------------------
     ANALYSIS TYPE: Federal Analysis--Energy Conservation Projects
     STUDY PERIOD:         25.00 YEARS (DEC 1994 THROUGH NOV 2019)
     PLAN/CONSTR. PERIOD:   4.67 YEARS (DEC 1994 THROUGH JUL 1999)
     SERVICE PERIOD:       20.33 YEARS (AUG 1999 THROUGH NOV 2019)
     DISCOUNT RATE:   3.0% Real (exclusive of general inflation)
     BASE CASE LCC FILE:   NMSF.LCC
     ALTERNATIVE LCC FILE: NMSF2.LCC

              COMPARISON OF PRESENT-VALUE COSTS

                                        BASE CASE:    ALTERNATIVE:    SAVINGS
                                        PASSIVE       ACTIVE HEPA     FROM ALT.
INITIAL INVESTMENT ITEM(S):             ------------  ------------  ------------
 CASH REQUIREMENTS AS OF SERVICE DATE     $842,695    $1,196,765    -$354,070
                                          ---------     ---------     ---------
    SUBTOTAL                              $842,695    $1,196,765    -$354,070
FUTURE COST ITEMS:
 ANNUAL AND NON-AN. RECURRING COSTS             $0      $149,754    -$149,754
 ENERGY-RELATED COSTS                           $0       $19,724     -$19,724
 REPLACEMENTS TO CAPITAL                        $0       $18,393     -$18,393
                                          ---------     ---------     ---------
    SUBTOTAL                                    $0      $187,871    -$187,871
                                          ---------     ---------     ---------
  TOTAL P.V. LIFE-CYCLE COST              $842,695    $1,384,636    -$541,941

   NET SAVINGS FROM ALTERNATIVE ACTIVE HEPA COMPARED TO ALTERNATIVE PASSIVE


       Net Savings  =  P.V. of non-investment savings     -$169,478
                    -  Increased total investment          $372,463
                                                        -------------
                                      Net Savings:        -$541,941


  Note: the SIR and AIRR computations include differential initial costs,
  capital replacement costs, and resale value (if any) as investment costs,
  per NIST Handbook 135 (Federal and MILCON analyses only).


   Can't compute meaningful SIR and AIRR for the Alternative Case because
   its incremental investment is positive and total savings are negative.
           This project alternative IS NOT cost effective.



       ESTIMATED YEARS TO PAYBACK (FROM BEGINNING OF SERVICE PERIOD)

            Simple Payback never reached during study period
            Discounted Payback never reached during study period

                           ENERGY SAVINGS SUMMARY

 Energy            Units     -------- Annual Consumption ---------  Life-Cycle
  type                        Base Case   Alternative   Savings      Savings
---------------   --------   -----------  -----------  ----------  ----------
 Electricity       kWh                 0       20,323     -20,323    -413,233

                        EMISSIONS REDUCTION SUMMARY

  Energy           --- Annual Emissions ---     Annual      Life-Cycle
  type             Base Case   Alternative    Reduction     Reduction
---------------   ----------- -----------   -----------   ------------
[illegible]ectricity:
[illegible] (Kg):         0.0    11,805.4     -11,805.4     -240,041.6
[illegible]x (Kg):        0.0        99.2         -99.2         -976.0
  NOx (Kg):              0.0        50.6         -50.6       -1,029.6
Total:
```

CO2 (Kg):	0.0	11,805.4	-11,805.4	-240,041.6
SOx (Kg):	0.0	99.2	-99.2	-976.0
NOx (Kg):	0.0	50.6	-50.6	-1,029.6

```
NIST BLCC: COMPARATIVE ECONOMIC ANALYSIS (version 4.20-95)

        BASE CASE: ACTIVE
        ALTERNATIVE: ACTIVE HEPA

        PRINCIPAL STUDY PARAMETERS:
        --------------------------
        ANALYSIS TYPE: Federal Analysis--Energy Conservation Projects
        STUDY PERIOD:         25.00 YEARS (DEC 1994 THROUGH NOV 2019)
        PLAN/CONSTR. PERIOD:   4.67 YEARS (DEC 1994 THROUGH JUL 1999)
        SERVICE PERIOD:       20.33 YEARS (AUG 1999 THROUGH NOV 2019)
        DISCOUNT RATE:   3.0% Real (exclusive of general inflation)
        BASE CASE LCC FILE:   NMSF1.LCC
        ALTERNATIVE LCC FILE: NMSF2.LCC

                COMPARISON OF PRESENT-VALUE COSTS

                                         BASE CASE:    ALTERNATIVE:    SAVINGS
                                         ACTIVE        ACTIVE HEPA     FROM ALT.
INITIAL INVESTMENT ITEM(S):              ------------  ------------  ------------
 CASH REQUIREMENTS AS OF SERVICE DATE      $872,280     $1,196,765     -$324,485
                                          ---------      ---------     ---------
    SUBTOTAL                               $872,280     $1,196,765     -$324,485
FUTURE COST ITEMS:
 ANNUAL AND NON-AN. RECURRING COSTS          $8,235       $149,754     -$141,519
 ENERGY-RELATED COSTS                        $1,700        $19,724      -$18,024
 REPLACEMENTS TO CAPITAL                    $18,116        $18,393         -$277
                                          ---------      ---------     ---------
    SUBTOTAL                                $28,051       $187,871     -$159,820
                                          ---------      ---------     ---------
   TOTAL P.V. LIFE-CYCLE COST              $900,332     $1,384,636     -$484,305

    NET SAVINGS FROM ALTERNATIVE ACTIVE HEPA COMPARED TO ALTERNATIVE ACTIVE


        Net Savings  =  P.V. of non-investment savings     -$159,543
                     -  Increased total investment          $324,762
                                                        -------------
                                     Net Savings:          -$484,305


    Note: the SIR and AIRR computations include differential initial costs,
    capital replacement costs, and resale value (if any) as investment costs,
    per NIST Handbook 135 (Federal and MILCON analyses only).


    Can't compute meaningful SIR and AIRR for the Alternative Case because
    its incremental investment is positive and total savings are negative.
         This project alternative IS NOT cost effective.



        ESTIMATED YEARS TO PAYBACK (FROM BEGINNING OF SERVICE PERIOD)

              Simple Payback never reached during study period
              Discounted Payback never reached during study period

                          ENERGY SAVINGS SUMMARY

Energy          Units     -------- Annual Consumption ---------  Life-Cycle
 type                     Base Case   Alternative   Savings       Savings
--------------- --------  ----------- ----------- ----------   ----------
Electricity     kWh             1,752      20,323     -18,571     -377,609

                        EMISSIONS REDUCTION SUMMARY

 Energy          --- Annual Emissions ---     Annual      Life-Cycle
  type           Base Case    Alternative    Reduction     Reduction
--------------- ------------ ------------- -----------  ------------
  ctricity:
   2 (Kg):          1,017.7      11,805.4     -10,787.7    -219,348.1
  SOx (Kg):             8.6          99.2         -90.6        -891.9
  NOx (Kg):             4.4          50.6         -46.3        -940.8
Total:
```

CO2 (Kg):	1,017.7	11,805.4	-10,787.7	-219,348.1
SOx (Kg):	8.6	99.2	-90.6	-891.9
NOx (Kg):	4.4	50.6	-46.3	-940.8

```
******************************************************************************
*  N I S T  B L C C   I N P U T  D A T A  L I S T I N G (version 4.20-)  *
******************************************************************************

 LE NAME: NMSF
 LE LAST MODIFIED ON 02-22-1995/09:36:06
 OJECT ALTERNATIVE: PASSIVE
 MMENT: (NONE)

GENERAL DATA:
-------------
ANALYSIS TYPE: Federal Analysis--Energy Conservation Projects
BASE DATE FOR LCC ANALYSIS: DEC 1994
STUDY PERIOD: 25 YEARS, 0 MONTHS  INCLUDING PLANNING/CONSTRUCTION PERIOD
PLANNING/CONSTRUCTION PERIOD:  4 YEARS, 8 MONTHS
SERVICE DATE:   AUG 1999
DISCOUNT AND INTEREST RATES ARE Real (exclusive of general inflation)
DISCOUNT RATE:  3.0%
Escalation rates do not include general inflation

CAPITAL ASSET COST DATA:
------------------------
INITIAL COST (BASE YEAR $)          770359
EXPECTED ASSET LIFE (YRS/MTHS)        40/0
RESALE VALUE FACTOR                  0.00%
NUMBER OF REPLACEMENTS                   0

COST-PHASING SCHEDULE BY YEAR OF CONSTRUCTION AND AT SERVICE DATE:
                             1        0.00%
                             2        0.00%
                             3        0.00%
                             4        0.00%
                             5        0.00%
                  SERVICE DATE      100.00%


NO REPLACEMENTS


  ERATING, MAINTENANCE, AND REPAIR COST DATA:
  ------------------------------------------
  UAL RECUR OM&R COST ($):      0

No non-annually-recurring OM&R costs reported.

ENERGY-RELATED DATA:
-----------------
NUMBER OF ENERGY TYPES = 0
```

```
*****************************************************************
*N I S T  B L C C - D E T A I L E D  L C C  A N A L Y S I S (version 4.20-95)*
*****************************************************************

            PART I - INITIAL ASSUMPTIONS AND COST DATA
-----------------------------------------------------------------

      Project alternative: PASSIVE
      Run date: 02-22-1995 10:01:09
      Run type: Federal Analysis--Energy Conservation Projects
      Comment:
      Input data file: NMSF.DAT, last modified: 02-22-1995/09:36:06
      LCC output file: NMSF.LCC, created: 02-22-1995/09:36:09
      Base Date of Study:  DEC 1994
      Service Date:        AUG 1999
      Study period:        25.00 years (DEC 1994 through NOV 2019)
      Plan/constr. period:  4.67 years (DEC 1994 through JUL 1999)
      Service Period:      20.33 years (AUG 1999 through NOV 2019)
      Discount rate:        3.0%  Real (exclusive of general inflation)
      End-of-year discounting convention

 Note: This BLCC report satisfies the economic evaluation criteria of
       FEMP requirements for federal energy studies.

           INITIAL CAPITAL ASSET COSTS (NOT DISCOUNTED)
      (ADJUSTED FOR PRICE CHANGES DURING PLAN/CONST. PERIOD, IF ANY)
-----------------------------------------------------------------

                      YEAR
                  (Beginning) Cost Phasing   Yearly Cost     Total Cost
                  ----------- ------------  -------------   -------------
   AT SERVICE DATE:  AUG 2000    100.0%        $967,338
      TOTAL INITIAL CAPITAL ASSET COSTS                        $967,338

*****************************************************************
*****************************************************************

                PART II  -  LIFE-CYCLE COST ANALYSIS
        Discount Rate =  3.0% Real (exclusive of general inflation)
-----------------------------------------------------------------
 ROJECT ALTERNATIVE: PASSIVE             RUN DATE: 02-22-1995/10:01:09

                                          PRESENT VALUE    ANNUAL VALUE
                                         (1995 DOLLARS)   (1995 DOLLARS)
                                         --------------   -------------

 CASH REQUIREMENTS AS OF SERVICE DATE:
   DURING CONSTRUCTION                              $0               $0
   AT SERVICE DATE                            $842,695          $48,394
                                          ------------     ------------
    SUBTOTAL                                  $842,695          $48,394

 OPERATING, MAINTENANCE & REPAIR COSTS:
                                          ------------     ------------
    SUBTOTAL                                        $0               $0

 RESALE VALUE OF ORIG CAPITAL COMPONENTS            $0               $0

 RESALE VALUE OF CAPITAL REPLACEMENTS               $0               $0

 TOTAL LIFE-CYCLE PROJECT COST                $842,695          $48,394
*****************************************************************
```

```
*****************************************************************************
* N I S T   B L C C   C A S H   F L O W   A N A L Y S I S  (version 4.20-95) *
*****************************************************************************

  OJECT ALTERNATIVE: PASSIVE
  MMENT:
RUN DATE: 02-22-1995 10:02:43
INPUT DATA FILE: NMSF.DAT, LAST MODIFIED 02-22-1995/09:36:06
STUDY PERIOD:         25.00 YEARS (DEC 1994 THROUGH NOV 2019)
PLAN/CONSTR. PERIOD:  4.67 YEARS (DEC 1994 THROUGH JUL 1999)
SERVICE PERIOD:       20.33 YEARS (AUG 1999 THROUGH NOV 2019)
ANALYSIS TYPE: Federal Analysis--Energy Conservation Projects
All costs in constant 1994 dollars (i.e., excluding general inflation)


                         INITIAL CAPITAL COSTS
     (AS INCURRED DURING PLANNING/CONSTRUCTION PERIOD AND AT SERVICE DATE)

                            YEAR       TOTAL
                          BEGINNING  (BY YEAR)
                          ---------  ---------
                          DEC 1994           0
                          DEC 1995           0
                          DEC 1996           0
                          DEC 1997           0
                          DEC 1998           0
                          DEC 1999     967,338
                                     ---------
                            TOTAL      967,338


          CAPITAL INVESTMENT COSTS

           YEAR    INIT CAPITAL   CAPITAL      CAPITAL    TOTAL CAP.
         BEGINNING  INVESTMENT  REPLACEMENTS  DISPOSAL    INVESTMENT
         ---------  ----------  ---------    ---------   ----------
         DEC 1994           0           0           0            0
         DEC 1995           0           0           0            0
         DEC 1996           0           0           0            0
         DEC 1997           0           0           0            0
         DEC 1998           0           0           0            0
         AUG 1999     967,338           0           0      967,338
         AUG 2000           0           0           0            0
         AUG 2001           0           0           0            0
         AUG 2002           0           0           0            0
         AUG 2003           0           0           0            0
         AUG 2004           0           0           0            0
         AUG 2005           0           0           0            0
         AUG 2006           0           0           0            0
         AUG 2007           0           0           0            0
         AUG 2008           0           0           0            0
         AUG 2009           0           0           0            0
         AUG 2010           0           0           0            0
         AUG 2011           0           0           0            0
         AUG 2012           0           0           0            0
         AUG 2013           0           0           0            0
         AUG 2014           0           0           0            0
         AUG 2015           0           0           0            0
         AUG 2016           0           0           0            0
         AUG 2017           0           0           0            0
         AUG 2018           0           0           0            0
         AUG 2019           0           0           0            0
           TOTAL      967,338           0           0      967,338

            OPERATING-RELATED COSTS DURING SERVICE PERIOD:

  YEAR     ---------- OPERATING-RELATED COSTS -----------    TOTAL
BEGINNING    ANNUAL   NON-ANNUAL    ENERGY      WATER      OPER. COST
---------  ---------- ----------- ----------- ----------- -----------
 AUG 1999           0          0           0           0            0
  UG 2000           0          0           0           0            0
  UG 2001           0          0           0           0            0
  UG 2002           0          0           0           0            0
     2003           0          0           0           0            0
     2004           0          0           0           0            0
   G 2005           0          0           0           0            0
 AUG 2006           0          0           0           0            0
 AUG 2007           0          0           0           0            0
```

AUG 2008	0	0	0	0	0
AUG 2009	0	0	0	0	0
AUG 2010	0	0	0	0	0
AUG 2011	0	0	0	0	0
AUG 2012	0	0	0	0	0
AUG 2013	0	0	0	0	0
UG 2014	0	0	0	0	0
AUG 2015	0	0	0	0	0
AUG 2016	0	0	0	0	0
AUG 2017	0	0	0	0	0
AUG 2018	0	0	0	0	0
AUG 2019	0	0	0	0	0
TOTAL	0	0	0	0	0

SUM OF ALL CASH FLOWS

YEAR BEGINNING	CAPITAL INVESTMENT	OPERATING COSTS	TOTAL COST
DEC 1994	0	0	0
DEC 1995	0	0	0
DEC 1996	0	0	0
DEC 1997	0	0	0
DEC 1998	0	0	0
AUG 1999	967,338	0	967,338
AUG 2000	0	0	0
AUG 2001	0	0	0
AUG 2002	0	0	0
AUG 2003	0	0	0
AUG 2004	0	0	0
AUG 2005	0	0	0
AUG 2006	0	0	0
AUG 2007	0	0	0
AUG 2008	0	0	0
AUG 2009	0	0	0
AUG 2010	0	0	0
AUG 2011	0	0	0
AUG 2012	0	0	0
AUG 2013	0	0	0
AUG 2014	0	0	0
AUG 2015	0	0	0
AUG 2016	0	0	0
AUG 2017	0	0	0
AUG 2018	0	0	0
AUG 2019	0	0	0
TOTAL	967,338	0	967,338

```
******************************************************************************
*  N I S T  B L C C   I N P U T  D A T A  L I S T I N G (version 4.20-)  *
******************************************************************************

 LE NAME: NMSF1
 LE LAST MODIFIED ON 02-22-1995/09:54:50
 OJECT ALTERNATIVE: ACTIVE
COMMENT: (NONE)

GENERAL DATA:
-------------
ANALYSIS TYPE: Federal Analysis--Energy Conservation Projects
BASE DATE FOR LCC ANALYSIS: DEC 1994
STUDY PERIOD: 25 YEARS, 0 MONTHS  INCLUDING PLANNING/CONSTRUCTION PERIOD
PLANNING/CONSTRUCTION PERIOD:  4 YEARS, 8 MONTHS
SERVICE DATE:   AUG 1999
DISCOUNT AND INTEREST RATES ARE Real (exclusive of general inflation)
DISCOUNT RATE:  3.0%
Escalation rates do not include general inflation

CAPITAL ASSET COST DATA:
------------------------
INITIAL COST (BASE YEAR $)          797405
EXPECTED ASSET LIFE (YRS/MTHS)        40/0
RESALE VALUE FACTOR                   0.00%
NUMBER OF REPLACEMENTS                   4

COST-PHASING SCHEDULE BY YEAR OF CONSTRUCTION AND AT SERVICE DATE:
                           1          0.00%
                           2          0.00%
                           3          0.00%
                           4          0.00%
                           5          0.00%
               SERVICE DATE         100.00%


REPLACEMENTS TO CAPITAL ASSETS:
 ------------------------------
  PLACEMENT NUMBER                   1          2          3          4
 ARS/MONTHS FROM SERVICE DATE     10/0       20/0       30/0       40/0
  TIAL COST (BASE YEAR $)         5328       5328       5328       5328
  ECTED REPL. LIFE (YRS/MTHS)     10/0       10/0       10/0       10/0
RESALE VALUE FACTOR               0.00%      0.00%      0.00%      0.00%


OPERATING, MAINTENANCE, AND REPAIR COST DATA:
---------------------------------------------
ANNUAL RECUR OM&R COST ($):    405

No non-annually-recurring OM&R costs reported.

ENERGY-RELATED DATA:
-----------------
NUMBER OF ENERGY TYPES = 1
DOE energy price escalation rates filename: ENCOST95
DOE region (state code): 4 (NM)
DOE rate schedule type: Industrial
Underlying gen. inflation rate used with DOE rates:  0.00%

                              TYPE 1
ENERGY TYPE:                Electricity
BASE ANNUAL CONSUMPTION:       1752
UNITS:                          kWh
PRICE PER UNIT ($):             0.072
ANNUAL DEMAND CHARGE ($):       0.00
ESCALATION RATE METHOD:       DOE rates

                    1994        0.26
                    1995        0.43
                    1996       -0.23
                    1997       -0.56
                    1998       -0.26
                    1999        0.56
                    2000        0.96
                    2001        0.49
                    2002       -0.07
                    2003        0.07
                    2004       -0.13
```

2005	-0.49
2006	-0.33
2007	0.33
2008	0.59
2009	0.88
2010	0.90
2011	0.42
2012	0.41
2013	0.41
2014	0.41
2015	0.44
2016	0.41
2017	0.41
2018	0.43
2019	0.43

```
* * * * * * * * * * * * * * * * * * * * * * * * * * * * * * * * * * * * * * * * *
* N I S T   B L C C - D E T A I L E D   L C C   A N A L Y S I S (version 4.20-95)*
* * * * * * * * * * * * * * * * * * * * * * * * * * * * * * * * * * * * * * * * *

                PART I - INITIAL ASSUMPTIONS AND COST DATA
---------------------------------------------------------------------------------

        Project alternative: ACTIVE
        Run date: 02-22-1995 10:01:16
        Run type: Federal Analysis--Energy Conservation Projects
        Comment:
        Input data file: NMSF1.DAT, last modified: 02-22-1995/09:54:50
        LCC output file: NMSF1.LCC, created: 02-22-1995/09:54:55
        Base Date of Study:  DEC 1994
        Service Date:        AUG 1999
        Study period:        25.00 years (DEC 1994 through NOV 2019)
        Plan/constr. period:  4.67 years (DEC 1994 through JUL 1999)
        Service Period:      20.33 years (AUG 1999 through NOV 2019)
        Discount rate:        3.0%  Real (exclusive of general inflation)
        End-of-year discounting convention

  Note: This BLCC report satisfies the economic evaluation criteria of
        FEMP requirements for federal energy studies.

               INITIAL CAPITAL ASSET COSTS (NOT DISCOUNTED)
        (ADJUSTED FOR PRICE CHANGES DURING PLAN/CONST. PERIOD, IF ANY)
---------------------------------------------------------------------------------

                            YEAR
                        (Beginning) Cost Phasing    Yearly Cost      Total Cost
                        ----------- ------------   -------------   -------------
    AT SERVICE DATE:      AUG 2000     100.0%       $1,001,300
       TOTAL INITIAL CAPITAL ASSET COSTS                            $1,001,300

                           ENERGY-RELATED COSTS
---------------------------------------------------------------------------------
  Energy                    Units/     Price+  ---- Annual Cost -----    Total
   Type      Units           Year    ($/Unit)  Energy      Demand     P.V. Cost
 ---------- ------- ------------- -------- ----------- ---------- ------------
   ctricity  kWh             1,752   $0.072       $126         $0       $1,700

+Price and annual cost are as of base date (not adjusted for price escalation).

* * * * * * * * * * * * * * * * * * * * * * * * * * * * * * * * * * * * * * * * *
* * * * * * * * * * * * * * * * * * * * * * * * * * * * * * * * * * * * * * * * *

                     PART II  -  LIFE-CYCLE COST ANALYSIS
           Discount Rate =  3.0% Real (exclusive of general inflation)
---------------------------------------------------------------------------------
  PROJECT ALTERNATIVE: ACTIVE                   RUN DATE: 02-22-1995/10:01:16

                                                 PRESENT VALUE      ANNUAL VALUE
                                                (1995 DOLLARS)     (1995 DOLLARS)
                                                --------------     -------------

  CASH REQUIREMENTS AS OF SERVICE DATE:
     DURING CONSTRUCTION                                   $0                $0
     AT SERVICE DATE                                 $872,280           $50,093
                                                 ------------      ------------
      SUBTOTAL                                       $872,280           $50,093

  OPERATING, MAINTENANCE & REPAIR COSTS:
     ANNUALLY RECURRING COSTS (NON-ENERGY)             $8,235              $473
                                                 ------------      ------------
      SUBTOTAL                                         $8,235              $473

  ENERGY COSTS                                         $1,700               $98

  REPLACEMENTS TO CAPITAL COMPONENTS                  $18,116            $1,040

  RESALE VALUE OF ORIG CAPITAL COMPONENTS                  $0                $0

  RESALE VALUE OF CAPITAL REPLACEMENTS                     $0                $0

    AL LIFE-CYCLE PROJECT COST                       $900,332           $51,704
* * * * * * * * * * * * * * * * * * * * * * * * * * * * * * * * * * * * * * * * *
* * * * * * * * * * * * * * * * * * * * * * * * * * * * * * * * * * * * * * * * *
```

```
          PART III - EMISSIONS SUMMARY \a

   Energy          Annual      Life-cycle
    Type          Emissions    Emissions
-------------- ----------- -------------
Electricity:
 CO2 (Kg):          1,017.7        20,693
 SOx (Kg):              8.6            84
 NOx (Kg):              4.4            89
Total:
 CO2 (Kg):          1,017.7        20,693
 SOx (Kg):              8.6            84
 NOx (Kg):              4.4            89

\a Based on emission factors from file EMISSION.FIL
* * * * * * * * * * * * * * * * * * * * * * * * * * * * * * * * * * * * * * * * * *
```

```
****************************************************************************
* N I S T   B L C C   C A S H   F L O W   A N A L Y S I S (version 4.20-95) *
****************************************************************************

OJECT ALTERNATIVE: ACTIVE
MMENT:
RUN DATE: 02-22-1995 10:03:01
INPUT DATA FILE: NMSF1.DAT, LAST MODIFIED 02-22-1995/09:54:50
STUDY PERIOD:         25.00 YEARS (DEC 1994 THROUGH NOV 2019)
PLAN/CONSTR. PERIOD:   4.67 YEARS (DEC 1994 THROUGH JUL 1999)
SERVICE PERIOD:       20.33 YEARS (AUG 1999 THROUGH NOV 2019)
ANALYSIS TYPE: Federal Analysis--Energy Conservation Projects
All costs in constant 1994 dollars (i.e., excluding general inflation)


                       INITIAL CAPITAL COSTS
     (AS INCURRED DURING PLANNING/CONSTRUCTION PERIOD AND AT SERVICE DATE)

                          YEAR       TOTAL
                        BEGINNING  (BY YEAR)
                        ---------  ---------
                        DEC 1994           0
                        DEC 1995           0
                        DEC 1996           0
                        DEC 1997           0
                        DEC 1998           0
                        DEC 1999   1,001,300
                                   ---------
                          TOTAL    1,001,300


         CAPITAL INVESTMENT COSTS

          YEAR    INIT CAPITAL   CAPITAL      CAPITAL    TOTAL CAP.
        BEGINNING  INVESTMENT  REPLACEMENTS   DISPOSAL   INVESTMENT
        ---------  ----------  ----------   ---------   ----------
        DEC 1994            0           0           0            0
        DEC 1995            0           0           0            0
        DEC 1996            0           0           0            0
        DEC 1997            0           0           0            0
        DEC 1998            0           0           0            0
        AUG 1999    1,001,300           0           0    1,001,300
        AUG 2000            0           0           0            0
        AUG 2001            0           0           0            0
        AUG 2002            0           0           0            0
        AUG 2003            0           0           0            0
        AUG 2004            0           0           0            0
        AUG 2005            0           0           0            0
        AUG 2006            0           0           0            0
        AUG 2007            0           0           0            0
        AUG 2008            0      11,981           0       11,981
        AUG 2009            0           0           0            0
        AUG 2010            0           0           0            0
        AUG 2011            0           0           0            0
        AUG 2012            0           0           0            0
        AUG 2013            0           0           0            0
        AUG 2014            0           0           0            0
        AUG 2015            0           0           0            0
        AUG 2016            0           0           0            0
        AUG 2017            0           0           0            0
        AUG 2018            0      21,457           0       21,457
        AUG 2019            0           0           0            0
          TOTAL     1,001,300      33,438           0    1,034,738

           OPERATING-RELATED COSTS DURING SERVICE PERIOD:

   YEAR    ---------- OPERATING-RELATED COSTS ------------    TOTAL
 BEGINNING    ANNUAL    NON-ANNUAL    ENERGY       WATER     OPER. COST
 ---------  ----------- ----------- ----------- -----------  -----------
 AUG 1999          479           0         127           0          606
 AUG 2000          493           0         128           0          621
 AUG 2001          508           0         128           0          636
 AUG 2002          523           0         128           0          651
     2003          539           0         128           0          667
     2004          555           0         127           0          683
 AUG 2005          572           0         127           0          699
 AUG 2006          589           0         127           0          716
 AUG 2007          607           0         128           0          734
```

AUG 2008	625	0	129	0	753
AUG 2009	644	0	130	0	773
AUG 2010	663	0	130	0	793
AUG 2011	683	0	131	0	814
AUG 2012	703	0	132	0	835
AUG 2013	724	0	132	0	856
AUG 2014	746	0	133	0	879
AUG 2015	768	0	133	0	902
AUG 2016	791	0	134	0	925
AUG 2017	815	0	134	0	950
AUG 2018	840	0	135	0	975
AUG 2019	283	0	45	0	328
TOTAL	13,149	0	2,644	0	15,794

SUM OF ALL CASH FLOWS

YEAR BEGINNING	CAPITAL INVESTMENT	OPERATING COSTS	TOTAL COST
DEC 1994	0	0	0
DEC 1995	0	0	0
DEC 1996	0	0	0
DEC 1997	0	0	0
DEC 1998	0	0	0
AUG 1999	1,001,300	606	1,001,905
AUG 2000	0	621	621
AUG 2001	0	636	636
AUG 2002	0	651	651
AUG 2003	0	667	667
AUG 2004	0	683	683
AUG 2005	0	699	699
AUG 2006	0	716	716
AUG 2007	0	734	734
AUG 2008	11,981	753	12,735
AUG 2009	0	773	773
AUG 2010	0	793	793
AUG 2011	0	814	814
AUG 2012	0	835	835
AUG 2013	0	856	856
AUG 2014	0	879	879
AUG 2015	0	902	902
AUG 2016	0	925	925
AUG 2017	0	950	950
AUG 2018	21,457	975	22,431
AUG 2019	0	328	328
TOTAL	1,034,738	15,794	1,050,532

```
*****************************************************************************
*  N I S T  B L C C   I N P U T  D A T A  L I S T I N G (version 4.20-)  *
*****************************************************************************

.LE NAME: NMSF2
 LE LAST MODIFIED ON 02-22-1995/09:53:59
 OJECT ALTERNATIVE: ACTIVE HEPA
COMMENT: (NONE)

GENERAL DATA:
-------------
ANALYSIS TYPE: Federal Analysis--Energy Conservation Projects
BASE DATE FOR LCC ANALYSIS: DEC 1994
STUDY PERIOD: 25 YEARS, 0 MONTHS  INCLUDING PLANNING/CONSTRUCTION PERIOD
PLANNING/CONSTRUCTION PERIOD:  4 YEARS, 8 MONTHS
SERVICE DATE:   AUG 1999
DISCOUNT AND INTEREST RATES ARE Real (exclusive of general inflation)
DISCOUNT RATE:  3.0%
Escalation rates do not include general inflation

CAPITAL ASSET COST DATA:
------------------------
INITIAL COST (BASE YEAR $)          1094036
EXPECTED ASSET LIFE (YRS/MTHS)         40/0
RESALE VALUE FACTOR                    0.00%
NUMBER OF REPLACEMENTS                    2

COST-PHASING SCHEDULE BY YEAR OF CONSTRUCTION AND AT SERVICE DATE:
                             1         0.00%
                             2         0.00%
                             3         0.00%
                             4         0.00%
                             5         0.00%
                SERVICE DATE         100.00%


REPLACEMENTS TO CAPITAL ASSETS:
 ------------------------------
 PLACEMENT NUMBER                   1           2
 ARS/MONTHS FROM SERVICE DATE     20/0        40/0
  TIAL COST (BASE YEAR $)         9469        9469
  ECTED REPL. LIFE (YRS/MTHS)     20/0        20/0
RESALE VALUE FACTOR               0.00%       0.00%


OPERATING, MAINTENANCE, AND REPAIR COST DATA:
---------------------------------------------
ANNUAL RECUR OM&R COST ($):   7365

No non-annually-recurring OM&R costs reported.

ENERGY-RELATED DATA:
-----------------
NUMBER OF ENERGY TYPES = 1
DOE energy price escalation rates filename: ENCOST95
DOE region (state code): 4 (NM)
DOE rate schedule type: Industrial
Underlying gen. inflation rate used with DOE rates:  0.00%

                              TYPE 1
ENERGY TYPE:                Electricity
BASE ANNUAL CONSUMPTION:       20323
UNITS:                          kWh
PRICE PER UNIT ($):             0.072
ANNUAL DEMAND CHARGE ($):       0.00
ESCALATION RATE METHOD:       DOE rates

                 1994           0.26
                 1995           0.43
                 1996          -0.23
                 1997          -0.56
                 1998          -0.26
                 1999           0.56
                 2000           0.96
                 2001           0.49
                 2002          -0.07
                 2003           0.07
                 2004          -0.13
```

2005	-0.49
2006	-0.33
2007	0.33
2008	0.59
2009	0.88
2010	0.90
2011	0.42
2012	0.41
2013	0.41
2014	0.41
2015	0.44
2016	0.41
2017	0.41
2018	0.43
2019	0.43

```
* * * * * * * * * * * * * * * * * * * * * * * * * * * * * * * * * * * * * * * * *
* N I S T  B L C C - D E T A I L E D  L C C  A N A L Y S I S (version 4.20-95)*
* * * * * * * * * * * * * * * * * * * * * * * * * * * * * * * * * * * * * * * * *

                 PART I - INITIAL ASSUMPTIONS AND COST DATA
------------------------------------------------------------------------------

        Project alternative: ACTIVE HEPA
        Run date: 02-22-1995 10:01:53
        Run type: Federal Analysis--Energy Conservation Projects
        Comment:
        Input data file: NMSF2.DAT, last modified: 02-22-1995/09:53:59
        LCC output file: NMSF2.LCC, created: 02-22-1995/09:54:03
        Base Date of Study:  DEC 1994
        Service Date:        AUG 1999
        Study period:        25.00 years (DEC 1994 through NOV 2019)
        Plan/constr. period:  4.67 years (DEC 1994 through JUL 1999)
        Service Period:      20.33 years (AUG 1999 through NOV 2019)
        Discount rate:        3.0%  Real (exclusive of general inflation)
        End-of-year discounting convention

  Note: This BLCC report satisfies the economic evaluation criteria of
        FEMP requirements for federal energy studies.

              INITIAL CAPITAL ASSET COSTS (NOT DISCOUNTED)
        (ADJUSTED FOR PRICE CHANGES DURING PLAN/CONST. PERIOD, IF ANY)
------------------------------------------------------------------------------

                             YEAR
                          (Beginning) Cost Phasing    Yearly Cost     Total Cost
                          ----------- ------------   ------------   ------------
    AT SERVICE DATE:        AUG 2000     100.0%       $1,373,779
      TOTAL INITIAL CAPITAL ASSET COSTS                               $1,373,779

                           ENERGY-RELATED COSTS
------------------------------------------------------------------------------
  Energy                  Units/      Price+   ---- Annual Cost -----    Total
   Type      Units         Year      ($/Unit)  Energy       Demand     P.V. Cost
----------  -------  ------------  --------  ----------  ----------  ------------
 ctricity   kWh            20,323    $0.072     $1,463          $0       $19,724

+Price and annual cost are as of base date (not adjusted for price escalation).

* * * * * * * * * * * * * * * * * * * * * * * * * * * * * * * * * * * * * * * * *
* * * * * * * * * * * * * * * * * * * * * * * * * * * * * * * * * * * * * * * * *

                     PART II  -  LIFE-CYCLE COST ANALYSIS
            Discount Rate =  3.0% Real (exclusive of general inflation)
------------------------------------------------------------------------------
  PROJECT ALTERNATIVE: ACTIVE HEPA                RUN DATE: 02-22-1995/10:01:53

                                                  PRESENT VALUE     ANNUAL VALUE
                                                  (1995 DOLLARS)   (1995 DOLLARS)
                                                  --------------   --------------

  CASH REQUIREMENTS AS OF SERVICE DATE:
     DURING CONSTRUCTION                                    $0               $0
     AT SERVICE DATE                                $1,196,765          $68,728
                                                  ------------     ------------
      SUBTOTAL                                      $1,196,765          $68,728

  OPERATING, MAINTENANCE & REPAIR COSTS:
     ANNUALLY RECURRING COSTS (NON-ENERGY)            $149,754           $8,600
                                                  ------------     ------------
      SUBTOTAL                                        $149,754           $8,600

  ENERGY COSTS                                         $19,724           $1,133

  REPLACEMENTS TO CAPITAL COMPONENTS                   $18,393           $1,056

  RESALE VALUE OF ORIG CAPITAL COMPONENTS                   $0               $0

  RESALE VALUE OF CAPITAL REPLACEMENTS                      $0               $0

    AL LIFE-CYCLE PROJECT COST                      $1,384,636          $79,517
* * * * * * * * * * * * * * * * * * * * * * * * * * * * * * * * * * * * * * * * *
* * * * * * * * * * * * * * * * * * * * * * * * * * * * * * * * * * * * * * * * *
```

```
              PART III - EMISSIONS SUMMARY \a

           Energy         Annual     Life-cycle
            Type        Emissions    Emissions
       --------------  -----------  ------------
       Electricity:
        CO2 (Kg):        11,805.4        240,042
        SOx (Kg):            99.2            976
        NOx (Kg):            50.6          1,030
       Total:
        CO2 (Kg):        11,805.4        240,042
        SOx (Kg):            99.2            976
        NOx (Kg):            50.6          1,030

  \a Based on emission factors from file EMISSION.FIL
* * * * * * * * * * * * * * * * * * * * * * * * * * * * * * * * * * * * * * * * * 
```

```
*******************************************************************************
* N I S T   B L C C   C A S H   F L O W   A N A L Y S I S  (version 4.20-95) *
*******************************************************************************

ROJECT ALTERNATIVE: ACTIVE HEPA
MMENT:
RUN DATE: 02-22-1995 10:03:39
INPUT DATA FILE: NMSF2.DAT, LAST MODIFIED 02-22-1995/09:53:59
STUDY PERIOD:          25.00 YEARS (DEC 1994 THROUGH NOV 2019)
PLAN/CONSTR. PERIOD:    4.67 YEARS (DEC 1994 THROUGH JUL 1999)
SERVICE PERIOD:        20.33 YEARS (AUG 1999 THROUGH NOV 2019)
ANALYSIS TYPE: Federal Analysis--Energy Conservation Projects
All costs in constant 1994 dollars (i.e., excluding general inflation)


                            INITIAL CAPITAL COSTS
      (AS INCURRED DURING PLANNING/CONSTRUCTION PERIOD AND AT SERVICE DATE)

                               YEAR      TOTAL
                             BEGINNING  (BY YEAR)
                             ---------  ---------
                             DEC 1994           0
                             DEC 1995           0
                             DEC 1996           0
                             DEC 1997           0
                             DEC 1998           0
                             DEC 1999   1,373,779
                                        ---------
                               TOTAL    1,373,779


        CAPITAL INVESTMENT COSTS

         YEAR     INIT CAPITAL   CAPITAL       CAPITAL    TOTAL CAP.
       BEGINNING   INVESTMENT  REPLACEMENTS   DISPOSAL    INVESTMENT
       ---------   ----------   ---------    ---------    ----------
       DEC 1994             0           0            0             0
       DEC 1995             0           0            0             0
       DEC 1996             0           0            0             0
       DEC 1997             0           0            0             0
       DEC 1998             0           0            0             0
       AUG 1999     1,373,779           0            0     1,373,779
       AUG 2000             0           0            0             0
       AUG 2001             0           0            0             0
       AUG 2002             0           0            0             0
       AUG 2003             0           0            0             0
       AUG 2004             0           0            0             0
       AUG 2005             0           0            0             0
       AUG 2006             0           0            0             0
       AUG 2007             0           0            0             0
       AUG 2008             0           0            0             0
       AUG 2009             0           0            0             0
       AUG 2010             0           0            0             0
       AUG 2011             0           0            0             0
       AUG 2012             0           0            0             0
       AUG 2013             0           0            0             0
       AUG 2014             0           0            0             0
       AUG 2015             0           0            0             0
       AUG 2016             0           0            0             0
       AUG 2017             0           0            0             0
       AUG 2018             0      38,133            0        38,133
       AUG 2019             0           0            0             0
         TOTAL      1,373,779      38,133            0     1,411,912

          OPERATING-RELATED COSTS DURING SERVICE PERIOD:

   YEAR     ---------- OPERATING-RELATED COSTS ------------     TOTAL
 BEGINNING     ANNUAL    NON-ANNUAL     ENERGY      WATER      OPER. COST
 ---------  ----------- ----------- ----------- -----------  -----------
 AUG 1999        8,708           0       1,471           0       10,179
 AUG 2000        8,969           0       1,481           0       10,450
 .UG 2001        9,238           0       1,483           0       10,722
 AUG 2002        9,515           0       1,483           0       10,999
   G 2003        9,801           0       1,483           0       11,284
     2004       10,095           0       1,478           0       11,573
  UG 2005       10,398           0       1,472           0       11,870
 AUG 2006       10,710           0       1,473           0       12,182
 AUG 2007       11,031           0       1,480           0       12,511
```

AUG 2008	11,362	0	1,491	0	12,853
AUG 2009	11,703	0	1,504	0	13,207
AUG 2010	12,054	0	1,514	0	13,567
AUG 2011	12,416	0	1,520	0	13,935
AUG 2012	12,788	0	1,526	0	14,314
AUG 2013	13,172	0	1,532	0	14,704
UG 2014	13,567	0	1,539	0	15,106
UG 2015	13,974	0	1,545	0	15,519
AUG 2016	14,393	0	1,552	0	15,945
AUG 2017	14,825	0	1,558	0	16,383
AUG 2018	15,270	0	1,565	0	16,835
AUG 2019	5,139	0	522	0	5,661
TOTAL	239,126	0	30,672	0	269,798

SUM OF ALL CASH FLOWS

YEAR BEGINNING	CAPITAL INVESTMENT	OPERATING COSTS	TOTAL COST
DEC 1994	0	0	0
DEC 1995	0	0	0
DEC 1996	0	0	0
DEC 1997	0	0	0
DEC 1998	0	0	0
AUG 1999	1,373,779	10,179	1,383,957
AUG 2000	0	10,450	10,450
AUG 2001	0	10,722	10,722
AUG 2002	0	10,999	10,999
AUG 2003	0	11,284	11,284
AUG 2004	0	11,573	11,573
AUG 2005	0	11,870	11,870
AUG 2006	0	12,182	12,182
AUG 2007	0	12,511	12,511
AUG 2008	0	12,853	12,853
AUG 2009	0	13,207	13,207
AUG 2010	0	13,567	13,567
AUG 2011	0	13,935	13,935
AUG 2012	0	14,314	14,314
AUG 2013	0	14,704	14,704
AUG 2014	0	15,106	15,106
AUG 2015	0	15,519	15,519
AUG 2016	0	15,945	15,945
AUG 2017	0	16,383	16,383
AUG 2018	38,133	16,835	54,968
AUG 2019	0	5,661	5,661
TOTAL	1,411,912	269,798	1,681,710

ICF KAISER ENGINEERS

JOB NO. 41552-056

SHEET OF

ASSUMPTIONS FOR MAINTENENCE COSTS FOR ALT #1

DESIGNED BY CLQ DATE 12/14/

CHECKED BY DATE

1. LIFE OF FANS = 10 YRS.

2. INSPECT AND MAINTAIN FANS EVERY SIX MONTHS (INSPECTION AND MAINTENENCE TAKES 1 PERSON 4 HOURS EVERY 6 MONTHS AT $\$30^{00}$/HR)

$= (4HR)(2/YR)(\$30.^{00}/HR)$

$= \$ 80^{00}/YR$ (FOR EACH FAN)

3. CHANGE BELTS 1/YR (TO CHANGE BELTS ON ALL 3 FANS TAKES 1 PERSON 4 HOURS ONCE PER YEAR AT $\$30^{00}$/HR)

$(4HR)(1/YR)(\$30.^{00}/HR) =$

$= \$120^{00}/YR$

4. MATERIAL COSTS/YR. ASSUME BELTS COST $\$15^{00}$/BELT @ 3 BELTS/YR

$= 45^{00}/YR.$

5. TOTAL MAINTENENCE COSTS/YR

$\$240^{00}/YR$

$+\$120^{00}/YR$

$+\$45^{00}/YR$

$\$405^{00}/YR$

ICF KAISER ENGINEERS

JOB No. 41552-056

SHEET OF

ASSUMPTIONS FOR MAINTENENCE COSTS FOR ALT # 2

DESIGNED BY CLQ DATE 12/20/9

CHECKED BY DATE

1. LIFE OF FANS = 20 YRS

2. INSPECT AND MAINTAIN FANS EVERY SIX MONTHS (INSPECTION AND MAINTENENCE TAKES 1 PERSON 4 HOURS EVERY 6 MONTHS AT 30^{00}/HR)

   =(4 HR)(2/YR)(30.00/HR) = 80^{00}/YR (FOR EACH FAN)

3. CHANGE BELTS 1/YR (TO CHANGE BELTS ON ALL 3 FANS TAKES 1 PERSON 4 HOURS ONCE PER YEAR AT $\$30.^{00}$/HR)

   (4HR)(1/YR)($\$30.00$/HR) = $\$120^{00}$/YR

4. MATERIAL COSTS/YR

   A. BELTS COST $\$15^{00}$/BELT @ 3 BELTS/YR = $\$45^{00}$/YR

   B. PREFILTERS ARE CHANGED OUT EVERY 26 WEEKS (8 PRE FILTERS/YEAR)(10^{00}/FILTER) = 80^{00}/YR
   (AS PER BILL RADINSKI)

   C. HEPA FILTERS ARE CHANGED ONCE/YR (6 HEPA FILTERS/YR)(250^{00}/YR) = 1500^{00}/YR

5. LABOR COSTS FOR FILTER REPLACEMENTS.

   A. PREFILTERS (0.5 HRS/FILTER)(8 FILTERS)($\$30^{00}$/HR) = $\$120^{00}$/YR

   B. HEPA FILTERS (1 HR/FIL)(6 FIL)(30^{00}) = $\$180^{00}$/YR

6. TOTAL MAINTENENCE COST/YR

   $\$80^{00} + \$120^{00} + \$45^{00} + \$80^{00} + \$1500^{0} + \$120^{00} + \$180^{00}$

   $= \$2125^{00}$/YR

CALCULATIONS KE Form No. E-6 Rev. 12-89

ICF KAISER ENGINEERS

JOB No. 41552-056

SHEET OF

LIFE CYCLE COST ANALYSIS
CAPITAL REPLACEMENT COSTS
ALT #1

DESIGNED BY CLQ DATE 12/16/

CHECKED BY DATE

	LABOR	MAT
PROPELLER FANS REPLACEMENT	$\$ 360^{00}$	\$4056
DEMOLITION OF OLD FANS	$\$ 270^{00}$	
RECONNECT ELECTRICAL	$\$ 108^{00}$	
NEW STARTERS	$\$ 189^{00}$	$\$ 345^{00}$
TOTAL	\$927	\$4,401

$\$ 5328^{00}$

ICF KAISER ENGINEERS

JOB No. 41552-056
SHEET OF

LIFE CYCLE COST ANALYSIS
CAPITAL REPLACEMENT COSTS
ALT #2

DESIGNED BY CLQ DATE 12/20/9
CHECKED BY DATE

	MAT	LABOR
UTILITY FANS REPLACEMENT	$6,600^{00}$	360^{00}
DEMOLITION OF OLD FANS	–	180^{00}
RECONNECT ELECTRICAL	–	180^{00}
NEW STARTERS	1737	412.5
	8,337	1,132

9469^{00}

ICF KAISER ENGINEERS

JOB No. 41552-056
SHEET , OF

FAN SELECTION FOR ALT #1

DESIGNED BY CLQ DATE 12/13/9
CHECKED BY DATE

EXTERNAL STATIC PRESSURE

1. BIRDSCREEN & DAMPER	0.1
2. GOOSENECK	0.05
3. 50' DUCT WORK (0.1/100FT OF DUCT)	0.05
4. SUPPLY GRILLE - "	0.021
5. COOLING CIRCUIT (TUBES)	0.0006
6. EXHAUST PLENUM	0.04
	0.262
7. 10% SAFETY FACTOR =	0.027
	0.289 "@SL

8. CORRECTION FOR 7500FT ELEV
=(0.289)(0.76) = 0.22

USE 0.25" SP.

9. FAN SELECTION

MANUFACTURER:	GREENHECK	0.25 BHP
MODEL #:	SBE1L-20-4	(.25BHP)(0.7457KW)
HP	1/4 HP.	
RPM	1085	= 0.19 KW
CFM	1673CFM	USE .2 KW
TS	5679	
COST	$\$566^{00}$	

* USE 3 FANS 1-PRIMARY FAN 1-BACKUP FAN AND 1-FAN FOR MAINTENENCE BACKUP.

FAN REQUIRES 0.2/KW/HR.

(0.2KW/HR)(24HR/DAY)(365DAY/YR) = 1,752 KW/YR

ICF KAISER ENGINEERS

JOB No. 41552-056

SHEET OF

FAN SELECTION FOR ALT #2

DESIGNED BY CLP DATE 12/19/94

CHECKED BY DATE

EXTERNAL STATIC PRESSURE

1. BIRD SCREEN & DAMPER	0.1
2. GOOSENECK	0.05
3. 50' DUCTWORK (0.1/100FT OF DUCT)	0.05
4. SUPPLY GRILLE	0.021
5. COOLING CIRCUIT (TUBES)	0.0006
6. EXHAUST PLENUM	0.04
7. PREFILTER (DIRTY)	0.3
8. TEST SECTION	0.25
9. HEPA FILTER (DIRTY) 1ST STAGE	3.0
10. TEST SECTION	0.25
11. HEPA FILTER (DIRTY) 2ND STAGE	3.0
12. INLET HEPA FILTERS (DIRTY)	3.0
	10.1" @ SL
13. 10% SAFETY FACTOR - ELEV	1.1
	11.1

14. CORRECTION FOR 7500 FT ELEV = (11.1)(0.76) = 8.5" SP

USE 9.0" SP

CALCULATIONS KE Form No. E-6 Rev. 12-89

ICF KAISER ENGINEERS

JOB No. 41552-056

SHEET OF

FAN SELECTION FOR ALT #2

DESIGNED BY CLP DATE 12/19/9

CHECKED BY DATE

MANUFACTURER: GREENHECK

MODEL # ORB SIZE 11

HP 2-1/2 HP

RPM 2100

CFM 1842

TS 10,531

COST $\$2200^{\underline{00}}$

BRAKE HP= 4.09 @ SEA LEVEL.

CORRECTION FOR 7500 FT ELEV:

(2.34)(.76)= 3.1

USE 5 HP FAN.

KW USAGE OF FAN (3.1 BHP)(0.7457 KW)

= 2.32KW

(2.32KW/HR)(24HR/DAY)(365 DAY/YR) = 20,323 KW/YR

CALCULATIONS KE Form No. E-6 Rev. 12-89

ICF KAISER ENGINEERS

NMSF

JOB No. 4552-056

SHEET OF

DESIGNED BY CQ DATE 12/94

CHECKED BY DATE

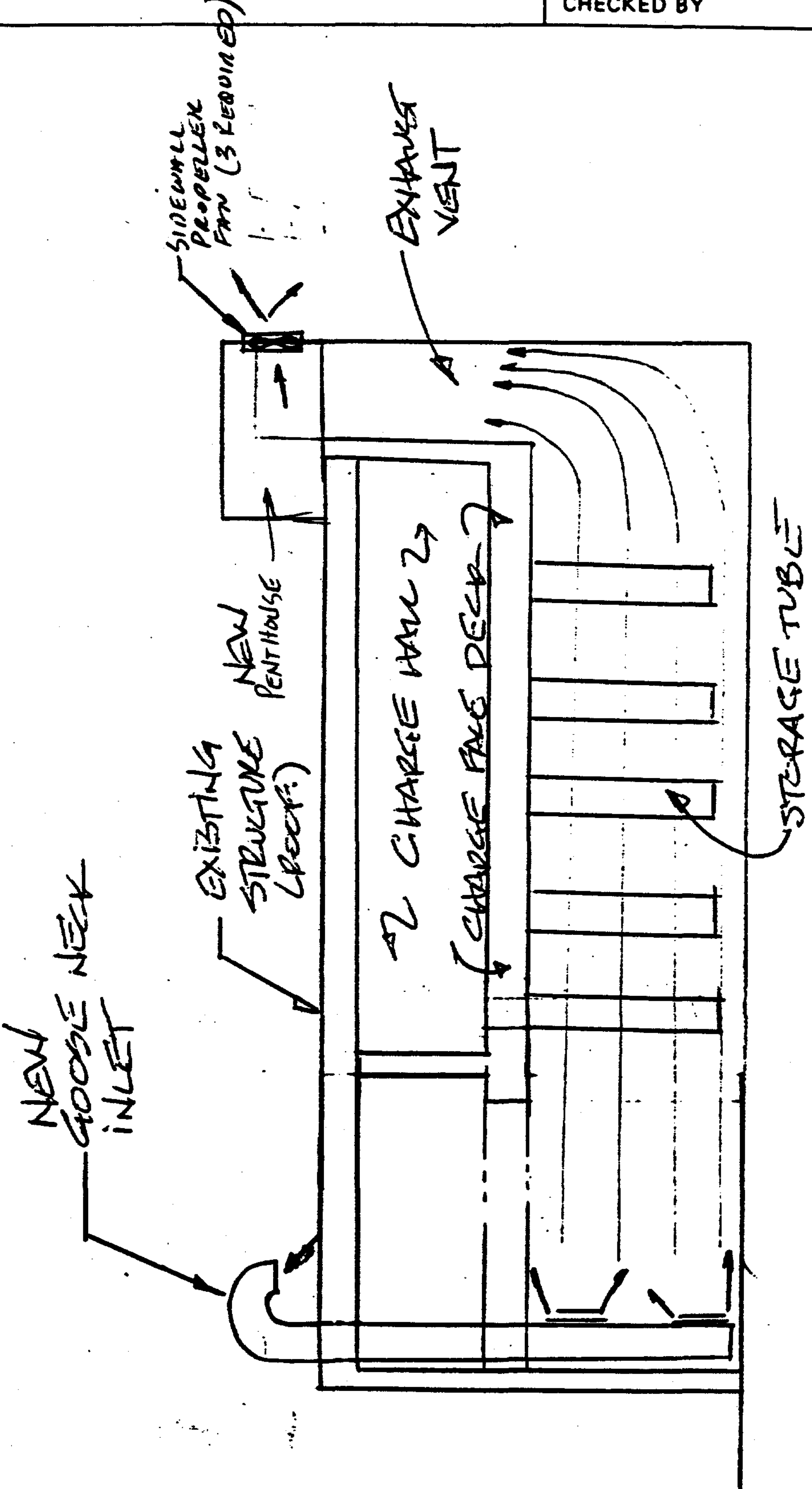

SCHEMATIC ~ SECTION THROUGH FACILITY

CALCULATIONS KE Form No. E-6 Rev. 12-89

APPENDIX NO. 12

SFE COST ESTIMATE INFORMATION FOR AIR COOLED STORAGE

SELECTED SFE ESTIMATES FOR CONFINEMENT APPROACHES

SPECIAL FACILITIES EQUIPMENT	FLOOR PLAN NO. 1 (10 HIGH)	FLOOR PLAN NO. 2 (6 HIGH)	COMMENTS
TERTIARY CAPSULES (APPX. $3,000/EA)	$1,800,000	$3,000,000	600 EA FLOOR PLAN NO. 1 1000 EA. FLOOR PLAN NO. 2
TUBE HANDLING MACHINE (HEPA AND NON–HEPA FILTERED CHARGE HALL)	$1,000,000	$2,000,000	2 MACHINES IN FLOOR PLAN NO. 2 – DIFFERENT SIZE BAYS
HEPA FILTERED TUBE HANDLING MACHINE	$1,020,000	$2,040,000	

SEE DETAILED ESTIMATES IN SUPPORTING DATA

TUBE HANDLING MACHINE

ITEM NO.	DESCRIPTION	PRICES (PER UNIT)
1.	TUBE HANDLING MACHINE – W/ NEUTRON SHIELDING, TO EXTRACT & INSERT SLEEVES 7'6" TALL TO 15'–0" TALL	$1,000,000
2.	AIRTIGHT SHIELDING VALVE ON MACHINE	(INCLUDED IN ITEM 1)
3.	NON–AIRTIGHT, PORTABLE SHIELDING VALVE FOR USE OVER DRYWELLS TO REMOVE SHIELD PLUGS	$350,000
4.	PLUG PULLERS	$37,500
5.	HEPA EQUIPMENT ADDED TO MACHINE	$20,000
6.	CCTV, LOW LEVEL ILLUMINATION, BAR CODE READER INSIDE MACHINE (FOR NDA, MC&A)	$150,000

NOTE: ABOVE PRICES BASED ON ESTIMATES PROVIDED BY FOSTER WHEELER ENERGY CORP. SEE ATTACHED MEMO.

BASKETS AND TERTIARY CAPSULES

ITEM NO.	DESCRIPTION	PRICES (PER UNIT)	UNITS REQUIRED	TOTAL COST
1.	BASKETS – HOLD 10 HIGH CONTAINERS @ 18" O.C. (FLOOR PLAN NO. 1)	$1,000	600	$600,000
2.	BASKETS – HOLD 6 HIGH CONTAINERS @ 18" O.C. (FLOOR PLAN NO. 2)	$1,000	1000	$1,000,000
3.	TERTIARY CAPSULES – 10 HIGH CONTAINERS @ 18" O.C. (FLOOR PLAN NO. 1)	$3,000	600	$1,800,000
4.	TERTIARY CAPSULES – 6 HIGH CONTAINERS @ 18" O.C. (FLOOR PLAN NO. 2)	$3,000	1000	$3,000,000

NOTE: ABOVE PRICES BASED ON ESTIMATES PROVIDED BY VARIOUS VENDORS