Final Scientific/Technical Report

Front-End Engineering Design (FEED) Study for a Carbon Capture Plant Retrofit to a Natural Gas-Fired Gas Turbine Combined Cycle Power Plant (2x2x1 Duct-Fired 758-MWe Facility with F Class Turbines)

DE-FE0031848

Project Period: Oct. 1st, 2019 – Jan 31st, 2022

Submitted March 2022

SUBMITTED BY

Bechtel National, Inc. 12011
Sunset Hill Road Reston, VA
20190

DUNS 168788003

PRINCIPAL INVESTIGATOR

W. R. Elliott

(571) 392-6592

belliott@bechtel.com

CONSORTIUM MEMBERS

Electric Power Research Institute

Augustus Benz, Consultant

Jonathan Gibbins, University of Sheffield

Kunlei Liu, University of Kentucky

SUBMITTED TO

U. S. Department of Energy
Office of Fossil Energy and Carbon Management
National Energy Technology Laboratory

_____

Bill Elliott

Acknowledgment: This material is based upon work supported by the Department of Energy Award Number DE-FE0031848.

Disclaimer: This report was prepared as an account of work sponsored by an agency of the United States Government. Neither the United States Government nor any agency thereof, nor any of their employees, makes any warranty, express or implied, or assumes any legal liability or responsibility for the accuracy, completeness, or usefulness of any information, apparatus, product, or process disclosed, or represents that its use would not infringe privately owned rights. Reference herein to any specific commercial product, process, or service by trade name, trademark, manufacturer, or otherwise does not necessarily constitute or imply its endorsement, recommendation, or favoring by the United States Government or any agency thereof. The views and opinions of authors expressed herein do not necessarily state or reflect those of the United States Government or any agency thereof.

Contents

Section 1: Abstract 1

Section 2: Introduction 4

Section 2.1: Project Objectives and Scope of Work 4

Section 2.2: Project Tasks 4

Task 1 - Project Management and Planning 4

Task 2 - Initial Process Engineering Design Package 4

Task 3 – Interim Process Engineering Design Package Review 5

Task 4 - Final Process Engineering and Initial Electrical, Automation Systems, Utilities and Other Engineering Design Package 5

Task 5 - Layout Design Package 6

Task 6 - Final Electrical, Automation Systems, Utilities and Other Engineering Design Package and Material Take-Off of Main Components Design Package 7

Task 7 - Site Security and Logistics 7

Task 8 - Basic Contracting/Purchasing Strategy and Constructability Review 7

Task 9 - Cost Estimation Design Package 7

Task 10 - Final Front-End Engineering Design Study Package 7

Section 2.3: Project Milestones 8

Section 3: Project Execution 9

Section 3.1 Task 1 - Project Management and Planning 10

Section 3.2 Task 2 - Initial Process Engineering Design Package 11

Section 3.2.1 Subtask 2.1 - Development of Project Design Basis 11

Section 3.2.2 Subtask 2.2 - Initial Process Engineering Design Package 11

Section 3.3 Task 3 - Interim Process Engineering Design Package Review 13

Section 3.4 Task 4 - Final Process Engineering and Initial Electrical, Automation Systems, Utilities and Other Engineering Design Package 13

Task 4 consisted of seven subtasks as described below: 13

Section 3.4.1 Subtask 4.1 - Final Process Engineering and Initial Electrical and Automation Systems Design Package 14

Section 3.4.2 Subtask 4.2 - Hazard and Operability / Process Hazard Analysis Documentation 15

Section 3.4.3 Subtask 4.3 - Civil Engineering 17

Section 3.4.4 Subtask 4.4 - Structural Engineering 18

Section 3.4.5 Subtask 4.5 - Mechanical Engineering 18

Section 3.4.6 Subtask 4.6 - Fire Protection Engineering 20
Section 3.4.7 Subtask 4.7 - Facilities Engineering 21
Section 3.5: Task 5 - Layout Design Package 22
Section 3.6: Task 6 - Final Electrical, Automation Systems, Utilities and Other Engineering Design Package and Material Take-Off of Main Components Design Package 23
Section 3.7: Task 7 - Site Security and Logistics 23
Section 3.8: Task 8 - Basic Contracting/Purchasing Strategy and Constructability Review 24
Section 3.8.1 Subtask 8.1 - Basic Contracting and Purchasing Strategy 24
Section 3.8.2 Subtask 8.2 - Constructability Review 25
Section 3.9: Task 9 - Cost Estimation Design Package 27
Section 3.10: Task 10 - Final Front-End Engineering Design Study Package 29
Section 4: Summary 30
Section 5: Recommendations for future research and development 33

Attachment 1: Front-End Engineering Design (FEED) Study for a Carbon Capture Plant Retrofit to a Natural Gas-Fired Gas Turbine Combined Cycle Power Plant

Section 1: Abstract

A comprehensive front-end engineering design (FEED) study has been undertaken by Bechtel National Inc. (Bechtel) for locating a post-combustion capture and compression (PCC) unit at Panda's Sherman natural gas–combined cycle (NGCC) power plant in Sherman, Texas. This is described in the unredacted FEED Study report (Attachment 1) with all supporting documents, numbering over 150. The Study Report is publicly available.

Sizing of the PCC plant is based on treating an amount of flue gas equivalent to that produced when generating 420 MW, which is approximately 68% of the total flue gas emitted by the NGCC power plant operating at guarantee condition with duct burners off. A reduced power plant capacity factor was used for sizing the PCC plant because the gas turbines at the site often operate at reduced load due to the high penetration of renewable power in the ERCOT region. The cost of carbon capture is primarily driven by capital cost (and therefore is highly sensitive to capacity factor). Sizing the capture unit so that when used it is nearly always operating at full capacity is critical to the economic viability of the proposed investment.

The PCC unit uses 35 wt% mono-ethanolamine (MEA) as the solvent to capture 85% of the CO_2 in the flue gas slipstream. MEA was selected because extensive information is available for it in the public domain and a previous NGCC retrofit study has shown that it would be comparable in performance and overall costs to a range of proprietary solvents. It is also widely available at low prices. At the design flue gas throughput of 704 kg/s, the PCC unit captures 129 t/h of CO_2. Energy consumption for solvent regeneration is estimated as 3.65 GJ/tCO_2 (of which 0.14 GJ/tCO_2 is provided by waste heat recovery from the CO_2 compressors), with design lean and rich loadings of 0.254 and 0.475 mole CO_2/mole MEA respectively, and an absorber liquid/gas ratio of 1.07.

To maintain low level of degradation products in the circulating solvent, a semi-continuous thermal reclaimer is used to process the equivalent of a complete plant solvent inventory every 28 days. Reclaiming takes place in two stages with 150ºC operating temperature in both. The first stage vents to the stripper at 2.6 bara, allowing the heat in the evaporated water vapor and MEA to be recovered. The second stage vents to the top of the absorber, at near atmospheric pressure. Solvent recovery in the reclaimer is estimated at ≥90%, with net solvent consumption 2 kg MEA/tCO_2 captured. MEA supply cost at the plant site was ascertained to be $1.15/kg delivered, 99% purity, iron and chlorine free. Reclaimer bottoms disposal costs are estimated at $500/t. This cost has been estimated at the high end of liquid hazardous waste haulage and disposal due to lack of actual waste characterization. Actual disposal cost is expected to be lower when the residuals are fully analyzed and classified.

In addition to heat recovery from the reclaimer, energy consumption for solvent regeneration is reduced by flashing some of the rich solvent using heat from the CO_2 compressor intercoolers and returning the resulting semi-lean solvent partway down the absorber.

The overall capital cost for the PCC retrofit is estimated at $477M, including indirect costs, owner's and contractor's costs, and interest during construction. CO_2 absorption equipment, at 34%, is the largest part of the capital cost; two cylindrical stainless-steel absorbers are used, internal diameter 11.8 m and 44.3 m straight section, with a superficial gas velocity of 2.76 m/s

and a total packing height of 15 m in two beds. Flue gas conveyance and conditioning, via a 6 x 6 m duct, with a water fogging system to reduce flue gas temperatures, accounts for 23% and the stack modifications, cutting a grid of perforations feeding into a transition manifold—a further 7% of capital costs. The solvent stripper and reboilers costs are 17% of the total. CO_2 compression and conditioning account for 19% of capital costs. A centrifugal compressor, send-out pump, and dehydration are used, delivering 151 bara CO_2. Installation and commissioning is based on 30 months from notice to proceed.

Estimated baseline CO_2 capture costs (both annualized capital and annual O&M together) are \$114.50/tCO_2, dominated by capital recovery charges. For a 70/30 debt-to-equity ratio with 6% interest rate on debt over 15 years and 12% return on equity, plus PCC operation for an average of 5,000 hours per year, these total \$83.10 \$/tCO_2 for just the annualized capital portion. Power plant net output is reduced by 67.3 MW when supplying PCC steam and electricity requirements. The PCC plant is not operated during those limited periods when the Texas ERCOT power grid has elevated prices (up to \$9,000/MWh) (nor when the power plant is not operating), and average foregone electricity revenues are assessed at \$25/MWh, contributing \$13.00/tCO_2 captured. Other costs are maintenance (\$7.00/tCO_2), staffing (\$7.75/tCO_2), solvent replacement (\$2.30/tCO_2), and waste disposal (\$1.35/tCO_2).

At the time of this FEED study, no full-scale NGCC power plants with PCC was built anywhere in the world; even pilot studies using NGCC flue gas conditions were limited. This leads to a lack of data for process simulation model validation under conditions of interest for commercial NGCC+PCC plants, that is, low CO_2 concentrations, relatively low absorber packing heights, and low liquid-to-gas ratios. MEA concentrations above 30 wt% have also received little previous attention in public domain testing. Slight differences in performance modeling predictions were observed between ProMax® and the MEA Steady-State Model from the Carbon Capture Simulation Initiative (CCSI) running under Aspen Plus® 10, leading to some uncertainty in precise values for the FEED design parameters. In addition, model predictions do not consider the actual variation in performance that can be expected under nominally constant process conditions. During normal operation, the solvent will not be a pure MEA solution but will attain an equilibrium composition as degradation and build-up of impurities are matched by reclaiming. Fouling and so on in service will also degrade component performance (for example, heat exchangers, pumps, and fans). These effects can be assessed based only on realistic long-term testing. The power and PCC plant loads may also, in practice, change rapidly enough for the plant never to achieve complete steady-state operation as process models assume. Transient modelling can be employed but again requires verification.

A pilot testing program is therefore proposed to resolve most of these design uncertainties, generally duplicating all process elements of the full-scale PCC unit apart from CO_2 product compression. The pilot plant will operate solely on flue gas from the Sherman power plant, accommodating the same frequent shutdowns of up to 48 hours that are expected for the commercial plant, with consequent possible impacts on PCC solvent quality and overall system performance. Proposed pilot plant sizing is based on a stripper column diameter of 0.4 m, which is considered by some packing vendors as the minimum diameter for meaningful test data, with a corresponding absorber diameter of 1.0 m. For test purposes, it will be possible to

use 10, 15, or 20 m of packing in the absorber and to assess reduced stripper packing heights. The primary pilot plant test objectives are to confirm the base case mass and energy balances for the PCC unit under design steady-state conditions; assess long-term solvent management requirements and reclaimer performance; confirm emissions levels of MEA, ammonia, and other degradation products in the absorber vent gas during long-term operations; and determine equipment corrosion rates and confirm materials selection. Initial confirmation of CO_2 recovery and heat and mass balances should be possible within a 30- to 60-day test program, but credible confirmation of amine degradation rates, reclaiming effectiveness, emissions rates, and system corrosion should be based on at least a 12-month run. With additional runs—for example, at reduced or increased packing heights—the overall test program would last 18–24 months.

Section 2: Introduction

This Final Scientific/Technical Report for DOE Award Number DE – FE 0031848 covers the entire project period from October 1, 2019 to January 31, 2022.

Section 2.1: Project Objectives and Scope of Work

This DOE-funded and Bechtel-led study was conducted to prepare a front-end engineering design (FEED) for a carbon capture and compression facility that captures approximately 85% CO_2 from the flue gas directed from a natural-gas combined-cycle (NGCC) plant. The design is based on using a low-cost generic solvent. The study includes quantities, cost estimates, and schedule for installing the carbon capture and compression plant at the Sherman combined-cycle plant in Texas, a duct-fired 758-MWe facility with F-class gas turbines.

Transportation of CO_2 and its ultimate use are not part of this study, but the location selected offers enhanced oil recovery opportunities and has saline aquifers and sedimentary basins for potential CO_2 storage. The proposed capture plant is based on conventional technology readiness level 9 technology comprising a generic solvent (e.g., mono-ethanolamine) and an absorber-stripper (regenerator) cycle and multi-stage centrifugal compressors.

To provide the greatest transparency and utility from the results of this study, an open-access philosophy was adhered to for this project and all aspects of the capture unit design are non-proprietary. These are summarized in the attached (Attachment 1) unredacted FEED Study report, along with supporting drawings and data sheets—numbering over 150 documents that are also publicly available.

Section 2.2: Project Tasks

The following tasks were completed in carrying out this Study:

Task 1 - Project Management and Planning

Bechtel managed and directed the project in accordance with the Statement of Project Objectives (SOPO) and the Project Management Plan (PMP) to meet the project's technical, schedule, and budget objectives.

Task 2 - Initial Process Engineering Design Package

Subtask 2.1 - Development of Project Design Basis

A Project Design Basis document was developed to define project requirements such as site soil condition, ambient conditions, flue gas characteristics, environmental requirements, cooling water quality, site specific design considerations, etc.

Subtask 2.2 - Initial Process Engineering Design Package

Bechtel developed the initial versions of process engineering documents to include block flow diagrams, process heat and mass balance diagrams, and process flow diagrams for the blower and quench sections, the two absorbers, lean amine cooling, the stripper, and fresh and lean amine storage.

Task 3 – Interim Process Engineering Design Package Review

Bechtel completed an interim review of the design package initially developed in Subtask 2.2. This interim review was conducted by the Board of Technical Counsel (Board) that was made up of individuals with industry and research backgrounds, who have significant process knowledge and process plant experience.

Task 4 - Final Process Engineering and Initial Electrical, Automation Systems, Utilities and Other Engineering Design Package

Subtask 4.1 - Final Process Engineering and Initial Electrical and Automation Systems Design Package

Bechtel resolved and incorporated comments from the interim review to develop the final version of the design package initially created in subtask 2.2. In addition, Bechtel developed the initial electrical and automation system design package, which included drawings or specifications for capture block electrical building layout, switchgear and transformers, power factor correction, and electrical loads summary.

Subtask 4.2 - Hazard and Operability / Process Hazard Analysis Documentation

Once the process design was developed, a Hazard and Operability study was conducted as part of a Process Hazard Analysis by a team of knowledgeable individuals drawn from relevant disciplines.

Subtask 4.3 - Civil Engineering

A Civil engineering design package was developed that addressed topics including soil load analysis, storm water runoff plan, geologic assessment, and spill containment assessment.

Subtask 4.4 - Structural Engineering

A design package consisting of structural and architectural engineering drawings was developed.

Subtask 4.5 - Mechanical Engineering

A Mechanical engineering design package was developed to include the following:

- General site plan view(s)
- 3-Dimensional model and/or equipment elevation sections and plan drawings
- Piping/tracing/insulation line list and material specification
- Piping isometrics
- Piping layout/routing drawings

Subtask 4.6 - Fire Protection Engineering

A fire and explosion strategy was developed to address fire and explosion hazards, ignition sources, fire and gas detection, and active and passive fire protection systems.

Subtask 4.7 - Facilities Engineering

A building security plan was developed that included controlled access, video surveillance and monitoring. Monitored areas included the front office, control room and maintenance/shop areas.

Heating, ventilation, and air conditioning was designed to meet the environmental conditions required for comfort in occupied areas. In areas such as the electrical room, the HVAC system was designed to meet the environmental conditions required by the equipment supplier.

Task 5 - Layout Design Package

Bechtel completed and reviewed the layout design package, including:

- Process Plant Arrangement Drawings

  Site plan and general arrangement plans were prepared for the carbon capture and compression facility showing all major process equipment, flue gas ductwork, pipe racks, access roads, supporting facilities and buildings and other significant facility elements.

- Piping and Piping and Instrumentation Diagrams

  Piping and Instrumentation Diagrams were prepared defining the flow of the process, indicating the quantities of equipment and components, characterizing the control and instrumentation, and identifying components furnished by others.

- Pipe Class Selection, Design Report, and Piping and Arrangement Safety

  For the major piping noted on the Piping and Instrumentation Diagrams, piping class sheets were prepared that define the material requirements and identify details of construction for piping systems.

Task 6 - Final Electrical, Automation Systems, Utilities and Other Engineering Design Package and Material Take-Off of Main Components Design Package

Bechtel completed and reviewed the final versions of all documents developed in Tasks 2 through 5, including completion of mechanical and electrical equipment lists and material take-off design package for cost estimating.

Task 7 - Site Security and Logistics

A plan for site security during construction and plant operation was developed, including a summary of the changes to the site security requirements associated with the installation of the carbon capture and compression facility at the power plant. A logistics plan was also developed.

Task 8 - Basic Contracting/Purchasing Strategy and Constructability Review

Subtask 8.1 - Basic Contracting and Purchasing Strategy

Contracting and purchasing strategies were proposed after reviewing various options.

Subtask 8.2 - Constructability Review

A constructability review was performed to review and identify construction access, lay-down areas, and sequencing of construction work.

Task 9 - Cost Estimation Design Package

Bechtel developed an overall project capital cost estimate within a +/- 15% accuracy. An estimate of the cost for operation and maintenance of the carbon capture facility was prepared as well. Fixed and variable costs were estimated. Based on these costs, the cost of carbon capture was calculated.

Task 10 - Final Front-End Engineering Design Study Package

A complete study package was prepared and is included as Attachment 1.

Section 2.3: Project Milestones

Project milestones are listed below:

- M1 Mobilization and Kick off
- M2 Project Management Plan Submittal
- M3 Initial Process Engineering Document Package (DP)
- M4 Final Process Engineering DP and Initial Electrical, Automation System, Utilities, and other Engineering DP
- M5 Layout Document Package
- M6 Final Electrical, Automation System, Utilities and Other Engineering DP and Material Takeoff of Main Components DP
- M7 Final FEED Study Report and Cost Estimation DP

Section 3: Project Execution

Bechtel has performed a comprehensive front-end engineering design (FEED) study for a carbon capture and compression plant retrofit to an existing natural gas-fired combined cycle (NGCC) power plant located in Texas. The capture plant is based on conventional technology comprising a non-proprietary aqueous solvent, mono-ethanolamine (MEA), an absorber-stripper cycle, and multi-stage centrifugal compressors.

The combined cycle power plant utilizes two Siemens F class gas turbines that discharge exhaust gas into their respective heat recovery steam generators (HRSG's). Both HRSG's supply steam at multiple pressure levels to a common steam turbine generator. Flue gas from each HRSG is discharged to atmosphere through a dedicated stack. Flue gas slipstreams from both units will be diverted to the post-combustion carbon capture (PCC) unit.

The PCC unit uses 35 wt% MEA as the solvent to capture 85% of the CO_2 in a slipstream, corresponding approximately to the flow that maximizes use of the new investment. MEA was selected because extensive information is available for it in the public domain and a previous NGCC retrofit study has shown that it would be comparable in performance and overall costs to a range of proprietary solvents. It is also widely available at low prices. At the design flue gas throughput of 704 kg/s, the PCC unit captures 129 t/h of CO_2. Energy consumption for solvent regeneration is estimated as 3.65 GJ/tCO_2 (of which 0.14 GJ/tCO_2 is provided by waste heat recovery from the CO_2 compressors), with design lean and rich loadings of 0.254 and 0.475 mole CO_2/mole MEA respectively, and an absorber liquid/gas ratio of 1.07.

To maintain a low level of degradation in the circulating solvent, a semi-continuous thermal reclaimer is used to process the equivalent of a complete plant solvent inventory every 28 days. Reclaiming takes place in two stages with 150°C operating temperature in both. The first stage vents to the stripper at 2.6 bara, allowing the heat in the evaporated water vapor and MEA to be recovered. The second stage vents to the top of the absorber, at near atmospheric pressure. Solvent recovery in the reclaimer is estimated at ≥90%, with net solvent consumption 2 kg MEA/tCO_2 captured.

MEA supply cost at the plant site was ascertained to be $1.15/kg delivered, 99% purity, iron and chlorine free. Reclaimer bottoms disposal costs are estimated at $500/t. This cost has been estimated at the high end of liquid hazardous waste haulage and disposal due to lack of actual waste characterization. Actual disposal cost would be expected to be lower when the residuals are fully analyzed and classified.

In addition to heat recovery from the reclaimer, energy consumption for solvent regeneration is reduced by flashing some of the rich solvent, using heat from the CO_2 compressor intercoolers, and returning the resulting semi-lean solvent partway down the absorber.

Following is a description of the work done for each Task in the Project scope of work.

Section 3.1 Task 1 - Project Management and Planning

The Project Management Plan (PMP) was developed to manage the project's technical, schedule, and budget objectives and requirements. The PMP was revised, as needed, through consultation with the Project Officer during the execution period of the project.

The philosophy followed by Bechtel in developing the PMP included the following concepts:

- Never compromise on safety goals and quality
- Stay aligned with the Owner's and other project stakeholders' goals
- Use a cost-effective standard approach
- Modify the project approach to suit customer and project specific conditions
- Always maintain control of areas affecting schedule and performance targets
- Use designs that support customer objectives

Following these proven concepts was the key to successful project management and execution.

After the kick-off meeting, one of the first tasks done was to form an execution team. The team consisted of all the disciplines required to execute the project as follows:

- Engineering- The team was led by a Project Engineering Manager (PEM) who was responsible for the design.

- Board of Technical Counsel- This Board comprised of process specialists with extensive expertise in carbon capture using amine solvents. The Board reviewed technical deliverables to ensure their accuracy and conformance to project requirements. The Board included specialists from industry, academia and the Electric Power Research Institute (EPRI).

- Procurement and Contracts – A Procurement manager was assigned for interface with the suppliers and obtaining budgetary quotes.

- Project Controls – A planning and scheduling engineer was assigned to prepare and monitor the schedule on a regular basis. In addition, an estimating manager was assigned for preparing an estimating plan and the final cost estimate.

- Construction – Construction manager provided input on all design drawings including interface items, Hazid review, and was the lead for the constructability plan.

- Startup and Commissioning – Startup engineering manager was assigned to review and provide input on P&IDs, participate in Hazop review and assist in any startup/commissioning related issues.

- All these disciplines worked under a Project Manager.

In addition to the team above, a consultant who is a specialist in carbon capture technology, assisted throughout the FEED study. All the disciplines and the consultant worked under a

Project Manager. Since the team members worked remotely due to the Covid pandemic, daily meetings were held via Microsoft TEAMS.

The project management and planning were done based on Bechtel's execution philosophy.

Bechtel managed and coordinated the technical scope, budget, risk, requirements of the National Environmental Policy Act (NEPA), and the schedule, consistent with task-oriented work breakdown structure (WBS) to effectively accomplish the Project. Bechtel worked with the DOE Contract Specialist and Project Officer to revise the PMP and award documents as necessary.

Section 3.2 Task 2 - Initial Process Engineering Design Package

Task 2 consisted of two subtasks as described below:

Section 3.2.1 Subtask 2.1 - Development of Project Design Basis

Following the formation of the project team the project site was selected and a design basis document was developed which is provided in Chapter 2 of the FEED study report. The reasons for selecting the Sherman Plant for this FEED study were Bechtel's familiarity with this plant, Owner's support and interest in carbon capture, and availability of space at the site for the PCC plant.

Design basis included parameters such as the ambient conditions, snow load, wind speed, seismic criteria, freeze protection criteria, requirements related to flood plain, soil conditions, rainfall, snowfall criteria, building/enclosure permitting, local community requirements, etc. It also included power plant data, water quality data, soil conditions, and composition of the flue gas to the PCC plant. Flue gas composition was finalized based on information from Siemens, the power island supplier, supplemented by actual power plant performance data and fuel analysis.

Design basis document also included the emissions and noise requirements that the project must meet. Existing power plant design basis requirements were checked to ensure that the design basis criteria for the PCC plant is consistent with it. Design criteria for the PCC plant included CO_2 compression process and the CO_2 purity requirements for its intended purpose.

Electrical distribution voltage requirements were specified for motors of various sizes as well as for use by other loads and services. Project modularization requirements were described to optimize the balance between shop versus field fabrication and minimizing time required for erection of equipment while ensuring ease of transportation for modularized packages.

Refer to Attachment 1, Study Report chapter 2 for details on the Project Design Basis.

Section 3.2.2 Subtask 2.2 - Initial Process Engineering Design Package

A preliminary design was first developed for the PCC plant including all the tie-ins between the power plant and PCC. This preliminary design was reviewed internally, including by the consultant Bechtel had contracted to assist in the design development.

The key activities performed during the preliminary design development were as follows:

- The PCC plant site location was selected after reviewing the power plant layout drawings and considering areas required for laydown and fabrication during construction.
- General arrangement drawings, piping drawings and electrical drawings of the power plant were reviewed and interface points selected based on construction ease, minimizing quantities, minimizing cost, and minimizing impact on the existing plant.
- Power plant calculations were reviewed to confirm that the power plant systems (e.g. cooling tower, water treatment system) have sufficient capacity to meet PCC requirements and there will be no deleterious impact to the operation of the power plant after tie-ins are done.
- Heat integration opportunities between the power plant and carbon capture plant were identified for incorporation in the design.
- Heat and mass balance for the carbon capture were done based on Promax model.
- Heat and mass balance of the power plant were done using Thermoflow.
- Process flow diagrams (PFDs), Utility drawings, and P&IDs were developed.
- Sizing was completed and data sheets prepared for major equipment.
- Mechanical utilities were sized based on heat and mass balance results.
- Control philosophy was developed for the operation, monitoring and shutdown of the plant.
- System descriptions were written for the PCC plant.

The major systems included in the initial process design were the flue gas blower and quench system, CO_2 absorption, semi lean amine system, CO_2 stripping and heat integration, CO_2 compression and drying, CO_2 pumping and dense phase transfer, amine reclaiming and storage. The preliminary design included process performance, process cooling and water balance, pressure safety valves and relief considerations, and exhaust, emissions and waste streams handling.

The focus of the PCC equipment selection and plant arrangement was on safety, followed by ease of operation and employing the most economical and cost-effective measures that successfully and effectively minimize piping quantities, use the most cost-effective materials, and integrate automation and controls requirements.

The PCC plant equipment and process have been selected to reduce the risk and magnitude of impact on the health and safety of workers and neighbors and the impact on the surrounding environment. Specific examples include the following:

- Closed amine drain system. All amine-containing streams are drained into a closed system to limit fugitive emissions and worker exposure.
- Sound limits. Generally, equipment is selected to produce a noise level not exceeding 85 dB at 1 meter. Blowers and compressors are located indoors to limit noise level at the site boundary.
- Pump seals. Pumps are specified to have high-integrity seals to reduce the risk of environmental releases.

Several meetings were held with Siemens during this phase to:

- Select the optimum tie in point that has least impact on the plant performance.
- To decide the scope of changes that will be in Siemen's scope.
- To check plant performance under different operating scenarios and to confirm that the steam flow through the LP turbine meets the minimum steam flow requirement at low load operation even after some of the LP steam is extracted from the crossover leg for PCC use.

Coordination meetings were held with the Power Plant Owner on a regular basis to keep them informed and to obtain their concurrence with the design.

Refer to Attachment 1, Study Report chapter 3 for details on the Interim Process Engineering Design Package.

Section 3.3 Task 3 - Interim Process Engineering Design Package Review

A cold-eye review was conducted by the Board of Technical Counsel consisting of third-party technical consultants. The Board of Technical Counsel were provided all design data and documents and after they had the opportunity to review the design, two half day sessions were held to address their comments and questions.

The relevant process design documents (process flow diagrams, data sheets, heat and material balances, and supporting evidence used for design) were shared with the team a week prior to the sessions for familiarization. During the two working sessions, process flow diagrams were displayed on the screen and reviewed in order of flow; comments, suggestions, and questions were addressed. Suggestions made throughout the sessions were recorded, before addressing them in detail design or in pilot testing. The complete record of discussion with clarifications and responses for both sessions is included in Appendix B of the Study Report

Refer to Attachment 1, Study Report Appendix B for details on the Interim Process Engineering Design Package.

Section 3.4 Task 4 - Final Process Engineering and Initial Electrical, Automation Systems, Utilities and Other Engineering Design Package

Task 4 consisted of seven subtasks as described below:

Section 3.4.1 Subtask 4.1 - Final Process Engineering and Initial Electrical and Automation Systems Design Package

After the cold-eye review by the technical committee, their comments were incorporated in the final design or resolved otherwise as documented in Appendix B of the Study Report. Some recommendations by the technical committee were noted for incorporation or further investigation in the next phase of the project.

In addition to updating and finalizing the documents developed in Subtask 2.2, Initial Process Engineering Design Package, the following additional documents were prepared as part of the Initial Electrical and Automation Systems Design Package:

- Electrical single line drawings and controls architecture drawings.
- Routing of cables and underground utilities.
- Electrical load list.
- Emergency diesel generator specifications.
- Uninterruptible power supply (UPS) specifications.
- Capture block electrical building layout.
- Switchgear and transformer specifications.
- Cable and raceways descriptions.
- Earthing and Lightning Protection.
- Lighting.
- Electrical Interfaces.
- The following design features of the electrical systems aspects were confirmed:
    - Power factor correction.
    - Short circuit.
    - Load flow.
    - Transient stability.
    - Harmonic distortion analysis.

The automation system initial design package was developed and included the following key documents/topics:

- Overall control systems architecture
- Control philosophy and approach: human factors
- Safety and shutdown analysis and provisions
- Safety and automation system
- Gas and emissions monitoring and metering
- Startup and shutdown considerations
- Primary control system and equipment
- Central control room layout
- Local equipment/instrument room layouts
- Packaged equipment controls interface
- Field instruments and devices
- External controls systems interfaces
- Major upset conditions

Control systems operational aspects were developed from the control systems architecture specification to include normal, upset and shutdown operating modes. Carbon capture process control methodology and required functionality and instrumentation were developed and presented in narrative and diagram formats.

Refer to Attachment 1, Study Report chapters 3, 4 and 6 for details on the Final Process Engineering Design Package and Initial Electrical, Automation Systems, Utilities and other Engineering Design Package.

Section 3.4.2 Subtask 4.2 - Hazard and Operability / Process Hazard Analysis Documentation

HAZID Review:

After completion of the process design, a team of knowledgeable individuals representing all relevant functions and disciplines was formed and several discussions held to examine the hazards associated with the post-combustion capture and compression (PCC) Plant Retrofit to the Natural Gas-Fired Combined Cycle (NGCC) Power Plant (PP). Integration of the two facilities was reviewed with regards to impact on environment, safety and security, health, constructability, interface hazards, etc. Safeguards were recommended and/or items identified so they can be resolved during detail engineering.

The study reviewed a wide range of possible project issues and considered future project phases.

The safeguards identified in the HAZID study are based on the design proposed during the FEED stage and served as the front-end input to other risk management and process hazards analysis studies conducted during later stages of the FEED. Recommendations made shall be

addressed during the engineering, procurement, and construction (EPC) phase of the project. The following systems were addressed in the HAZID study:

- Impact of the existing Sherman NGCC power plant on the proposed post-combustion carbon capture facility
- Impact of the proposed carbon capture facility on the existing Sherman power plant, from the flue gas tie-in (at the heat recovery steam generator [HRSG] stacks) to the PCC plant absorber towers—including the newly installed diversion duct, water mist injection facilities, and flue gas blowers
- Main carbon capture plant (processing trains from the absorber towers to the CO_2 compression building, bunded storage tank area, and general inside battery limit (ISBL) areas of the carbon capture plant).
- General construction and scheduling issues.

HAZID findings for the FEED stage are included in the HAZID worksheet (Attachment 1, Study Report Appendix N).

Hazop Review:

Another team was formed from all relevant disciplines and functions and the Hazop review was conducted under the Chairmanship of a Process Safety Engineer using project P&IDs. Deviations within the project design which could result in unsafe operating conditions or unexpected operational difficulties were identified during the review and the condition, function, malfunction, or operation which caused the deviation noted. Safeguards such as instrumentation, alarms, shutdowns, relief valves, or operator action, that could help mitigate the situation (consequences) were also identified and recommendations provided when change was warranted to improve safety or operability hardware, instrumentation, controls, or operating procedures.

In the HAZOP study methodology, questions were asked regarding the changes/deviations to the process parameters to examine consequences from a design intent perspective at selected locations in the process flow.

Deviations were chosen by the team, and any condition, function, malfunction, or operation that could cause the deviation being examined was noted in the **Cause** column. The **Consequences** column was used to record the resulting worst-case consequences from each cause if no safeguards were in place. If system safeguards were included in the design—such as instrumentation, alarms, shutdowns, relief valves, or operator action, which could mitigate the situation (consequences)—these were entered in the **Safeguards** column of the worksheet. If the available safeguards were not sufficient to protect the plant from the identified consequences, the team decided that a change was warranted to improve safety or operability, and recommendations were noted in the **Recommendations** column for a revisit during the detailed design of the EPC phase. These changes could be in hardware, instrumentation, controls, or operating procedures. The HAZOP worksheet serves as a record of the sessions.

Refer to Attachment 1, Study Report Appendix O for details on the HAZOP review.

Section 3.4.3 Subtask 4.3 - Civil Engineering

The PCC site is adjacent to the NGCC plant as shown in the plot plan, 26301-000-P1-0010-00001 (Attachment 1 Study Report chapter 4). The selected site is relatively flat, and the amount of earthwork required for the rough grading of the site is minimal as shown in Drawing 26301-000-CG-0000-00001 (Attachment 1 Study Report Appendix R).

The soil properties for the PCC site were considered the same as those for the NGCC plant due to proximity of the two sites. See Attachment 1 Study Report Appendix T for the preliminary soil analysis. It is recommended that an investigation be conducted specifically for the PCC site prior to the engineering, procurement, and construction (EPC) phase to confirm the site's soil properties. There are no known underground utilities in the PCC area, but this should also be confirmed during the EPC phase.

The geotechnical report for the NGCC plant indicated that soils consist of clay, CL (lean) to CH (fat), overlying shallow bedrock. The fat clay layer is thin near the ground surface; evaluation for NGCC foundations had concluded that shallow mat foundations are acceptable without the risk of heave and settlement. PCC plant foundations use the same basis as the NGCC; it was concluded that piles or piers are not required.

Stormwater runoff determination was based on design storm having a 10-year recurrence interval, 24-hour duration. Surface runoff will be controlled using ditches and/or catch basins and underground conduits. The drainage for uncontaminated runoff from the plant area, including roof drainage from the buildings and enclosures, will be diverted to natural watercourses through closed conduits and/or open ditches. The site drainage plan is shown in Drawing 26301-000-CD-0000-00001 (Study Report Appendix R). The site is above the 100-year flood boundary and has no wetlands.

Prior to start of construction, a permit will be required from the Texas Commission on Environmental Quality (TCEQ) for stormwater discharges during construction. The U.S. Environmental Protection Agency (USEPA) has delegated the implementation of the National Pollutant Discharge Elimination System (NPDES) program to TCEQ. The requirements for erosion and sediment control for the PCC site are expected to be similar to the program adopted for the NGCC. Soil erosion and sediment controls will generally consist of control of runoff, vegetation stabilization, and sediment traps. All slopes, drainage ditches, and other exposed areas will be stabilized by vegetation. Sediment traps such as hay bales or synthetic filter fabric (silt fence) will be installed around catch basin inlets, culvert inlets, and at the top and toe of slopes.

Grading and pavement designs comply with the applicable codes and standards as well as national highway regulations.

The groundwater at this site is expected to fluctuate seasonally based on precipitation according to the observations made during NGCC geotechnical investigation. Where excavation is carried out below the groundwater surface, a dewatering system will be required to maintain groundwater elevation below the working surface of the excavation so that backfilling and material compaction are not affected by groundwater.

Refer to Attachment 1, Study Report chapter 8 for details about the Civil Engineering Design Package.

Section 3.4.4 Subtask 4.4 - Structural Engineering

Design of structural and miscellaneous steel is in accordance with the American Institute of Steel Construction (AISC) Specification for Structural Steel Buildings. Materials for structural steel and miscellaneous steel conforms to the requirements of the American Society for Testing and Materials Standard Specification for Structural Steel, ASTM A36, A572 Grade 50, A913 Grade 65, A992. Structural steel and miscellaneous steel for exterior use are galvanized.

Structural steel grating is welded and galvanized and shall conform to Federal Specification RR-G-661, type I. Bearing bars will be 1-1/4 in. x 3/16 in. minimum at 1-3/16 in. on-center (O.C.) with crossbars at 4 in. O.C. minimum.

Structural steel typical sections and details, are shown in Drawings 26301-000-S0-0000-00001, 26301-000-S0-0000-00002, 26301-000-S0-0010-00003, and 26301-000-S0-0010-00004 in Attachment 1 Study Report Appendix R.

Refer to Attachment 1, Study Report chapter 8 for details about the Civil Engineering Design Package.

Section 3.4.5 Subtask 4.5 - Mechanical Engineering

The Mechanical Engineering design package included the following activities:

- Heat balances for the power plant
- P&ID's for systems listed below:
    - Steam
    - Flue gas
    - Compressed air
    - Fire protection
    - Compressed gasses
    - Potable water
    - Steam condensate
    - Cooling water
- Sizing of the following key mechanical equipment
    - Air compressors and dryers
    - Main cooling water pumps
    - Pressure vessels
    - Flue gas duct from stack tie-in to flue gas blowers

- Equipment data sheets were prepared to obtain budgetary quotes
- Overall facility performance was evaluated
- Water balance was developed

Development of the General site plan views, 3-Dimensional model and equipment elevation sections and plan drawings, piping/tracing/insulation line list and material specification, piping isometrics, and piping layout/routing drawings is described under Task 5, Layout Design Package.

Mechanical Utility Systems:

The mechanical utilities for the Sherman post-combustion carbon-capture and compression (PCC) plant are as follows:

- Steam (low pressure [LP] and medium pressure [MP])
- Condensate
- Potable water
- Cooling water
- Fire protection water
- Compressed air
- Inert gases (nitrogen)

The requirements for these utilities are listed in Attachment 1 Study Report Appendix I. The heat and mass balances in Document 26301-000-M4-CN-00001 (in Study Report Chapter 3). These utilities support the plant's main amine process for capturing CO_2.

The PCC plant piping design is governed by ASME B31.3, plumbing code, NFPA, and/or local codes as applicable. The line designation table is shown in Attachment 1 Study Report Appendix H and piping material classes are given in the piping class selection document (26301-000-3DS-P72G-00001 in Appendix F).

Piping is designed to resist plant-specific loads. Typical loading for a piping system includes the following:

- Dead loads
- Live loads
- Wind loads
- Seismic loads
- Test loads
- Temperature and pressure loads

Parts of the PCC plant requiring insulation to reduce heat loss or afford safety to personnel are thermally insulated. Piping, ducts, and other hot surfaces within reach of personnel are limited to 60°C regardless of ambient conditions or have standoffs or other protection in combination with insulation to meet this standard.

Thermal insulation materials are calcium silicate, fiberglass, or mineral fiber. Asbestos materials are prohibited. A jacket or suitable coating is provided on the outside surface of the insulation. Where a hard-setting compound is used as an outer coating, it is non-absorbent and non-cracking. Thermal insulation remains chemically inert even when saturated with water. Insulation system materials, including jacketing, have a flame spread rating of 25 or less when tested in accordance with ASTM E 84.

A pipeline list was developed that identified large bore piping, heat trace and insulation requirements, and piping class designations.

Design temperature limits for thermal insulation are based on system operating temperature during normal operation.to allow for more realistic cost estimates.

Refer to Attachment 1, Study Report chapter 5 for details about the Mechanical Engineering Design Package.

Section 3.4.6 Subtask 4.6 - Fire Protection Engineering

The fire water system is shown in P&ID 26301-000-M6-PF-00001 in Attachment 1 Study Report Appendix A.

The PCC plant is provided with an 8 in. fire loop that receives water from the NGCC underground fire loop. Two separate fire water supply lines feed the PCC plant fire loop. Isolation valves are provided so that fire water supply is available if a portion of the fire loop has to be isolated. The fire water will be supplied at approximately 11.5 barg and at ambient temperature. The system is sized to supply the design maximum water demand for automatic suppression system plus 114 m^3/hr for fire hydrants or hose stations based on National Fire Protection Association (NFPA) requirements.

The fire loop provides firefighting water to yard hydrants, hose stations, and the automatic wet pipe sprinkler system through service water branch lines. The only automatic suppression system is the wet pipe sprinkler system covering the CO_2 compressor area.

Fire hydrants are spaced at approximately 250 ft (76 m) intervals around the fire loop. The hydrants are located in accordance with NFPA 24 and local fire codes. Hose houses are provided for each hydrant. The fire protection system is augmented by portable fire extinguishers located throughout the plant.

The F&G detection system is largely an alarm system, but it can also take actions other than activating remote or local area alarms devices—such as shutting off heating, ventilating, and air-conditioning (HVAC) systems upon combustible/toxic gas detection or starting HVAC systems upon CO_2 detection in case of fire or gas or spill detection.

The plant fire alarm system includes local fire alarms, automatic fire and gas detectors, and a fire- and gas-detection programmable logic controller (PLC), as required by design codes. The PLC interfaces with the plant DCS.

As part of safety and health plans, a Fire and Emergency Services (FES) study should be developed in accordance with ISO 13702 to examine fire and explosion hazards associated with the PCC plant.

Following are the design objectives of the FES:

- Provide direction to project management in controlling fire and explosion (F&E) hazards associated with this project
- Establish a strategy to ensure that the identified F&E hazards associated with the operational development phases are addressed

This section lists preliminary FES components and/or recommendations for the PCC:

- Fire and explosion hazards
- Ignition source control
- Fire and Gas Detection
- Depressurizing
- Active Fire Protection
- Passive Fire Protection
- Emergency Power systems
- Drainage systems

Refer to Attachment 1, Study Report chapter 5 for details about the Fire Protection Systems Design Package.

Section 3.4.7 Subtask 4.7 - Facilities Engineering

The site will have controlled access and CCTV monitoring as described in Section 3.7. The building that includes the offices and central control room (CCR) will also have controlled access. The CCR and administration areas have wide corridors and clear exits designed in simple linear formation to facilitate emergency evacuation.

The CCR and administrative areas of the control/workshop/laboratory building have two 100% thermostatically controlled, packaged heating, ventilating, and air-conditioning (HVAC) units. The air-conditioned areas are maintained at 25°C ±1.7°C and 55% relative humidity (summer) and 21°C ±1.7°C (winter).

The electrical building has two 100% thermostatically controlled, packaged HVAC units to maintain conditions suitable for the equipment. The battery room also has two 100% exhaust fans to limit the hydrogen concentration below 2% by volume.

The PCC plant's CO_2 compressor building has wall mounted ventilation supply fans. The fans automatically cycle from the thermostat setting. Thermostatically controlled electric unit heaters are provided to maintain the indoor temperature at 10°C during the winter in unoccupied areas. In the event of a fire or combustible gas detection, the supply air fans will automatically trip.

Lighting levels meet applicable Occupational Safety and Health Administration (OSHA) guidelines.

Section 3.5: Task 5 - Layout Design Package

The PCC plant is located adjacent to the natural gas–combined cycle (NGCC) Sherman Power Plant in Grayson County, Texas, which is owned and operated by Panda Power. See Attachment 1 Study Report Figure 4-4 for PCC location and in Attachment 1 Study Report Appendix E. The PCC plant is within a fixed area of 70 m x 210 m that includes two flue gas blowers, two absorber columns, one stripper column, a CO_2 compressor building, an electrical building, a tanks/unloading area, and a control/administration/ storage/laboratory building.

The layout design package for the PCC project was developed by Bechtel using industry best practices to ensure that incompatible pieces of equipment and processes are kept a sufficient distance apart and safe egress is available from the operating areas.

Safety measures are planned and incorporated with regard to head clearances, walkways, clear safety escape routes, pull spaces, and machinery maintenance areas. The PCC plant arrangement is shown on Plot plan 26301-000-P1-0010-00002 and on Layout/General Arrangement Drawings 26301-000-P1-0010-00001, 26301-000-P1-0310-00001, 26301-000-P1-0310-00002, and 26301-000-P1-0310-00003. These drawings are included in chapter 4 of the Study Report. Piping arrangement and elevations of the PCC plant are shown in "P4" drawings in Appendix E of the Study Report.

Routing of the ducting from the NGCC HRSG stacks was a key factor in determining the location and arrangement of the absorbers. The two 11.8 m diameter absorber columns are set to accommodate the incoming 6.2 m square flue gas duct in an equal distribution through the two flue gas blowers. The associated equipment, pumps, exchangers, and so on are strategically located to accommodate the shortest possible pipe runs and symmetrical configuration for the process design.

To control the average circuit and umbilical lengths, the electrical building and the continuous emissions monitoring system (CEMS) building have been located to be central to the process. The piping is routed with particular attention to achieving the shortest route. The piping sizes and wall thicknesses are based on the system design pressures and temperatures. The piping sizes and pipe class designations for each system are shown on their respective P&IDs (Study Report Appendix A). The piping material, size, and schedule information for each system are provided in Pipe Class Selection, document no. 26301-000-3DS-P72G-00001 (Study Report Appendix F).

Refer to Attachment 1, Study Report chapter 4 for details about the Layout Design Package.

Section 3.6: Task 6 - Final Electrical, Automation Systems, Utilities and Other Engineering Design Package and Material Take-Off of Main Components Design Package

In this task Bechtel completed and issued the final versions of the following design packages and documents:

- Project Design Basis
- Process Engineering design package
- Electrical, Automation Systems, Utilities and Other Engineering design package
- Hazard and Operability / Process Hazard Analysis Documentation
- Civil Engineering design package
- Structural Engineering design package
- Mechanical Engineering design package
- Fire Protection Engineering design package
- Facilities Engineering design package
- Layout design package

Mechanical and Electrical equipment lists and material take-offs were developed and issued to Estimating. All documents were reviewed prior to their issue by persons qualified to check and verify the completeness and accuracy of those deliverables.

Refer to Attachment 1, Study Report chapters 3, 4 and 6 for details on the Final Electrical, Automation Systems, Utilities and Other Engineering Design Package and Material Take-off of Main Components Design Package.

Section 3.7: Task 7 - Site Security and Logistics

Site security and logistics were planned during the Hazid and Constructability reviews. A permanent fence will be provided around the PCC with two gates for controlled ingress/egress. During construction, the fenced area will be extended, as necessary, to include areas of construction outside the PCC for the interconnecting ducting, piping, pipe rack, etc. Unauthorized access to the power plant area will not be allowed during construction.

Normal site security measures will be enforced during construction of the PCC site such as the traffic plan and emergency response plan. Post construction, integrated emergency response plan, evacuation plan, and traffic plan will be used by the power plant and PCC plant. Entry to the plants, including materials deliveries to the site will be controlled.

CCTVs will be located at the PCC plant for monitoring. In addition, key signals will be exchanged, and communication link established between the PCC and power plant control rooms.

Section 3.8: Task 8 - Basic Contracting/Purchasing Strategy and Constructability Review

For basic contracting and procurement, the proposed strategy should be to source globally and think locally, matching project schedules with market conditions, shop availability, and potential local capacity to find the best materials and services at the most competitive prices.

Task 8 consisted of two subtasks as described below:

Section 3.8.1 Subtask 8.1 - Basic Contracting and Purchasing Strategy

The following activities were performed by the procurement group.

- Key suppliers were identified and contacted to obtain budgetary proposals
- Traffic and logistics plan was prepared
- Strategy for procurement of equipment during EPC phase was prepared.

For supply chain, the goal of safely delivering equipment, materials, and services of the right quality, on time, and within established commercial budgets can be achieved using a combination of the following buyout strategies:

- A competitive bid, evaluate, award (BEA) process. For select items, shortlisting may take place based on a preliminary technical and commercial assessment to expedite award. To the extent practical, low-cost country sourcing from proven suppliers and "manufacturer's standard" strategies should be used.
- Single-source procurements. The procurement group should evaluate single-source procurements based on customer standardization initiatives (if any; that is, limit operational spare holdings), positive past performance, favorable commercial terms from recent projects, and where there are appropriate opportunities to leverage strategic agreements. This strategy will save both Engineering and Procurement service hours while striving for target pricing at or below previous project levels and foster business relationships within the supply chain.
- Sole-source procurements. Equipment selections resulting from the FEED study and lessons from the pilot plant should be considered for sole-source procurement in collaboration with Engineering and vendors.
- Consider online bidding (reverse auction) for commodities where it may be commercially advantageous. These commodities consist of items such as cable, cable trays, bulks, and general service pumps.
- Identify commodities that could be procured off-the-shelf (OTS), eliminating the need for a technical evaluation.
- Consolidate commodities, where possible, to reduce the number of purchase orders which will reduce job hours and increase purchasing volume to drive down commitment costs.

- Promote opportunities to procure the supplier's standard equipment ("buy what they build") to reduce cost, improve quality, shorten vendor drawing review, and shorten delivery.
- Direct hire execution supplemented by specialty subcontractors.
- Incentivize early receipt of critical vendor data and critical path services with key selected suppliers/subcontractors.
- Make limited use of liquidated damages.

Contracting Strategy:

One major EPC vertical lump sum turnkey (LSTK) contract package is recommended for easier coordination and to ensure that all responsibilities lie with one contractor.

The alternative contracting plan options are based on the principle of identifying a small number of large contracts. This allows the larger, more capable construction companies to be engaged in their area of expertise. In addition, there will be several smaller service-type contracts in which smaller companies will participate. Contract packages should be determined using the following parameters:

- Integrated project schedule requirements
- Technical and functional uniqueness
- Engineering design schedule
- Equipment and material delivery schedule
- Capability and availability of local contractors

The contracts could be a mixture of horizontal and vertical packages.

The selection of the form of contract to be used should depend on several factors:

- The nature of the work and/or technology
- The maturity of engineering completion
- Capability of contractors
- Availability of contractors
- The degree of schedule control required
- The risk profile of the work package
- The amount of risk transfer vs. cost

Section 3.8.2 Subtask 8.2 - Constructability Review

A construction representative was assigned to lead the constructability review but it was conducted jointly by Construction and Engineering groups and input from Procurement group was also obtained, when needed. Constructability review considered the delivery dates of the

equipment for the construction sequencing and ensured that sufficient space is available to set each heavy lift.

In addition, the constructability plan considered the following:

- Safety
- Quality
- Timely completion
- Productivity
- Environmental issues
- Cost-effectiveness
- Operability
- Maintainability
- Reliability

The construction scope is subdivided into two construction areas:

- Modifications within the Sherman NGCC plant
- PCC plant

One of the goals of the constructability plan was to minimize disruption to the operating NGCC plant and reduce the outage periods. This led to the decision to use a mix of stick-build and pre-assembly approach as the preferred construction method. It was also agreed that a security barrier should be established between the NGCC plant and the PCC plant to ensure that only authorized personnel are present at the NGCC site.

Constructability reviews performed for the heat recovery steam generator (HRSG) stack tie-in determined that the minimum duration of outage for this work. A four-week outage window would be sufficient to complete the tie-in only if several construction activities are performed prior to the outage. An evaluation of the potential impacts to construction led to the decision to ensure that the guillotine dampers are installed during the pre-outage scope of work. The dampers will have to be installed and tested pre-outage to ensure that the flue gas can be isolated once the tie-in is made. This would permit construction and testing activities to continue on all equipment downstream of the dampers.

For the PCC plant, a step-by-step construction sequence from the initial site preparation to the final commissioning was prepared. Absorbers and stripper towers will be installed as soon as their on-site fabrication and testing is complete. The identification of installation dates for the absorber and stripper towers allowed the rigging sequence for related ductwork and pipe racks to be established.

After the absorbers and stripper towers are set, the installation of large-bore pipe commences. An important constructability issue is crane access around the towers during pipe installation. Therefore, areas with restricted access are a primary focus early in the piping phase.

The compressors are long-lead critical equipment. Constructability reviews revealed that the building design needs to accommodate late delivery of the compressors. Compressor sections are transported into the building through the roll-up door and rigged onto the foundation. This approach permits the bulk of the building to be constructed without the compressors.

A Level 1 construction schedule was prepared after the constructability review. The integration of construction knowledge and experience into the planning, design, and engineering process are the greatest benefits of the constructability program.

For further details on Basic Contracting / Purchasing Strategy and Constructability Review, refer to Chapter 15 of the Study Report (Attachment 1).

Section 3.9: Task 9 - Cost Estimation Design Package

The cost estimate was developed using the following approach:

- Budgetary quotes were obtained for all the major equipment, bid evaluations performed, and cost estimates that should be used were decided.
- In-house data was used for all equipment and material costs that were not covered by the budgetary quotes.
- An estimating plan was prepared and it included all the qualifications and assumptions used for cost estimation.
- OPEX estimation was done
- Impact of operating hours was calculated on the capacity factor and operating cost.

The capital costs for the PCC plant at Sherman, which is sized to treat the flue gas from an equivalent power plant operating at 420 MW output, are provided in Table 1 below and in Appendix AC of the Study Report. The quantities associated with this cost estimate are included in the Appendix as well.

Table 1: Capital Cost Estimate

1	Stack connection/modification including engineering, procurement, construction, and all ducting within the operating plant property	$15,851,337
2	Flue gas conditioning including engineering, procurement, construction from operating plant fence to absorber inlet flange	$52,418,588
3	CO_2 absorption including engineering, procurement, construction from flange in flue gas conditioning, and utility systems to flange toward solvent regeneration system	$79,589,477

4	Solvent regeneration including engineering, procurement, construction	$40,740,128
5	CO_2 compressor and conditioning including engineering, procurement, construction from flange solvent regeneration system, and utility system to flange of the CO_2 pipeline to transport project	$43,349,473
6	General utility system including engineering, procurement, construction	$51,319,711
7	Civil structural work including engineering, procurement, construction	$46,915,097
8	DCS, communication, main power supply, all distribution system and auxiliary system including engineering, procurement, construction	$55,674,815
9	General (indirect) costs	$59,132,274
10-A	Contractor's costs	$444,990,899
10-B	Owner's cost	5,009,101
	Direct cost	450,000,000
10-C	Interest during construction, 1-1/2 years at 4%	27,000,000
	Total cost	477,000,000

Cost Estimate Assumptions:

- Estimate is based on worldwide sourcing, with 1) no country and or melt of origin restrictions, 2) no Buy American Act obligations, and/or 3) any other potential project financing obligations such as export credit agencies (ECA), overseas private investment corporations (OPIC), international financial institutions (IFI), and international commercial and investment banks.
- Includes per diem for 60% of craft.
- The cost includes only 2% forward escalation.
- Pilot plant costs are excluded from this estimate.
- Costs are specific to the Sherman, Texas site and associated Transportation & Logistics, soils, craft, climate, and so on.
- Estimate includes builder's risk insurance and general liability. All other insurances are excluded (marine cargo, terrorism, and so on).
- Taxes are excluded.

OPEX estimate is shown in Table 2.

Table 2: Operating cost estimate is as follows (excluding capital cost recovery):

Energy (steam and electricity)	$5000\ \frac{hrs}{yr} \times 67.3\ MW \times \frac{\$25}{MWh} = \$8.4\ \frac{mil}{yr}$
Personnel	$40\ people \times \frac{\$100{,}000}{person \times yr} = \$4.0\ \frac{mil}{yr}$
Solvent	$\frac{\$1.14}{yr} \times \frac{2\ kg}{tonne\ CO_2} \times \frac{645{,}000\ tonne}{yr} = \$1.5\ \frac{mil}{yr}$
Maintenance allowance	$\$4.5\ \frac{mil}{yr}$
Admin allowance (parent company)	$\$1.0\ \frac{mil}{yr}$
Reclaimer waste disposal	$\frac{1732\ tonne}{yr} \times \frac{\$500}{tonne} = \$\ 0.87\ \frac{mil}{yr}$
Annual operating cost	$\$20.30\ \frac{mil}{yr}$

The total cost per tonne of CO_2 captured (on the basis of operating 5,000 hours/year) is shown in Table 3 below:

Table 3: Cost per Tonne of CO_2 Captured

	$/Tonne CO_2
Annualized capital cost	83.10
Annual O&M cost	31.40
Total cost per tonne CO_2	114.50

Refer to Attachment 1, Study Report chapter 16 for details on the capital and operating cost estimates.

Section 3.10: Task 10 - Final Front-End Engineering Design Study Package

The final Front End Engineering Design Study Report was issued after completion of all the tasks described above. That Study Report is included as Attachment 1 to this Final Scientific and Technical Report.

Section 4: Summary

Bechtel has performed a front-end engineering design (FEED) for a post-combustion capture and compression (PCC) facility that captures approximately 85% CO_2 from the flue gas directed from a natural-gas combined-cycle (NGCC) power plant. The design is based on using a low-cost generic solvent, mono-ethanolamine (MEA), an absorber-stripper cycle, and multi-stage centrifugal compressors. The study includes quantities, cost estimates, and schedule for installing the carbon capture and compression plant at the Sherman combined-cycle power plant in Texas, a duct-fired 758-MWe facility with F-class gas turbines.

The overall capital cost for the PCC retrofit is estimated at $477M, including indirect costs, owner's and contractor's costs, and interest during construction; completion is 30 months from notice to proceed. CO_2 absorption equipment, at 34%, is the largest part of the cost; two cylindrical stainless-steel absorbers are used, internal diameter 11.8 m and 44.3 m straight section, with a superficial gas velocity of 2.76 m/s and a total packing height of 15 m in two beds. Flue gas conveyance and conditioning, via a 6 x 6 m duct, with a water fogging system to reduce flue gas temperatures, accounts for 23% and the stack modifications, cutting a grid of perforations feeding into a transition manifold—a further 7% of capital costs. The solvent stripper and reboilers costs are 17% of the total. CO_2 compression and conditioning account for 19% of capital costs.

The study estimated baseline CO_2 capture costs (both annualized capital and annual operations and maintenance [O&M] together based on current pricing) at $\$114.50/tCO_2$, were dominated by capital recovery charges. For a 70/30 debt-to-equity ratio with 6% interest rate on debt over 15 years and 12% return on equity—plus post-carbon capture (PCC) operation for an average of 5,000 hours per year—these total $\$83.10/tCO_2$ for just the annualized capital portion.

Average foregone electricity revenues as a result of reduced output when supplying PCC with extraction steam and its electricity requirements are assessed at $25/MWh, contributing $\$13.00/tCO_2$ captured. Other costs are maintenance ($\$7.00/tCO_2$), staffing ($\$7.75/tCO_2$), solvent replacement ($\$2.30/tCO_2$), and waste disposal ($\$1.35/tCO_2$).

Electric revenue loss is based on Sherman power plant net output reduction of 67.3 MW due to LP steam extraction and PCC electricity requirements. The PCC plant is not intended to be operated during limited periods when the Texas ERCOT power grid has elevated prices (up to $9,000/MWhr) or when the power plant is not operating.

The economic review of the Sherman PCC project is based on 5,000 hours per year of operation of the PCC at its full capacity (see Table 4). Although this may be overly optimistic in the context of the ERCOT market with its high rate of increase in renewable generation, the ancillaries market in ERCOT continues to evolve and may provide opportunities for additional generation hours at Sherman. The capacity factor assumption requires detailed interrogation prior to the customer's financial investment decision.

Table 4: Total Annual Cost; 5,000 hrs per year basis

	$ mil/yr
Annualized capital cost	53.6
Annual O&M cost	20.3
Total annual cost	73.9

It should be recognized that the hours of operation that the PCC plant will operate each year have a significant impact on the annualized capital cost per tonne of CO_2 captured, as seen in Table 5 below:

Table 5: Operating Hours Impact on Capacity Factor and Capital Cost

Hours of PCC Operation Per Year	Tonnes/yr CO_2 Captured	Capacity Factor	$/tonne CO_2 @ $53.6 mil Annualized Capital Cost
5000	645,000	57%	83.108
4000	516,000	46%	103.90
6000	774,000	68%	69.25
7750	1,000,000	88%	53.60

As can be seen in the example above, the over-estimation of the capacity factor (hours and rate of operation) of the PCC results is a dramatic under-estimation of the real capture cost.

Key economic metrics of the Sherman Carbon Capture project are presented in Table 6 below:

Table 6: Power Plant Carbon Capture Economics

Economic Values	Units	Current R&D Value	Target R&D Value
Cost of Carbon Captured	$/tonne CO_2	114.50	114.50
Cost of Carbon Avoided	$/tonne CO_2	136.50	136.50
Capital Expenditures	$/MWhr	32.43	32.43
Operating Expenditures	$/MWhr	11.50	11.50
Cost of Electricity	$/MWhr	63.93	63.93[1]

[1] Assumed cost of electricity is $20.00 per MWh without carbon capture.

A pilot testing program is proposed to resolve any design uncertainties highlighted in the report, generally duplicating all process elements of the full-scale PCC unit apart from CO_2 product compression.

Section 5: Recommendations for future research and development

At the time of this FEED study, no full-scale NGCC power plants with PCC have been built anywhere in the world; even pilot studies using NGCC flue gas conditions are limited. This leads to a lack of data for process simulation model validation under conditions of interest for commercial NGCC+PCC plants, that is, low CO_2 concentrations, relatively low absorber packing heights, and low liquid-to-gas ratios. MEA concentrations above 30 wt% have also received little previous attention in public domain testing.

Slight differences in performance modeling predictions were observed between ProMax® and the MEA Steady-State Model from the Carbon Capture Simulation Initiative (CCSI) running under Aspen Plus® 10, leading to some uncertainty in precise values for the FEED design parameters. In addition, model predictions do not consider the actual variation in performance that can be expected under nominally constant process conditions. During normal operation, the solvent will not be a pure MEA solution but will attain an equilibrium composition as degradation and build-up of impurities are matched by reclaiming. Fouling and so on in service will also degrade component performance (for example, heat exchangers, pumps, and fans). These effects can be assessed based only on realistic long-term testing.

The power and PCC plant loads may also, in practice, change rapidly enough for the plant never to achieve complete steady-state operation as process models assume. Transient modelling can be employed but again requires verification.

A pilot testing program is therefore proposed to resolve most of these design uncertainties, generally duplicating all process elements of the full-scale PCC unit apart from CO_2 product compression. The pilot plant will operate solely on flue gas from the Sherman power plant, accommodating the same frequent shutdowns of up to 48 hours that are expected for the commercial plant, with consequent possible impacts on PCC solvent quality and overall system performance. Pilot plant sizing is based on a stripper column diameter of 0.4 m, which is considered by some packing vendors as the minimum diameter for meaningful test data, with a corresponding absorber diameter of 1.0 m.

For test purposes, it will be possible to use 10, 15, or 20 m of packing in the absorber and to assess reduced stripper packing heights. The primary pilot plant test objectives are to confirm the base case mass and energy balances for the PCC unit under design steady-state conditions; assess long-term solvent management requirements and reclaimer performance; confirm emissions levels of MEA, ammonia, and other degradation products in the absorber vent gas during long-term operations; and determine equipment corrosion rates and confirm materials selection. Initial confirmation of CO_2 recovery and heat and mass balances should be possible within a 30- to 60-day test program, but credible confirmation of amine degradation rates, reclaiming effectiveness, emissions rates, and system corrosion should be based on at least a 12-month run. With additional runs—for example, at reduced or increased packing heights—the overall test program would last 18–24 months.

ATTACHMENT 1

Front-End Engineering Design (FEED) Study for a Carbon Capture Plant Retrofit to a Natural Gas-Fired Gas Turbine Combined Cycle Power Plant

ATTACHMENT 1
2021 TECHNICAL REPORT

Front-End Engineering Design (FEED) Study for a Carbon Capture Plant Retrofit to a Natural Gas-Fired Gas Turbine Combined Cycle Power Plant

Report Number: DOE-BECHTEL-FE0031848

WORK PERFORMED UNDER AGREEMENT
DE-FE0031848
December, 2021



Sponsoring Program Office: National Energy Technology Laboratory (NETL)
Name of Recipient: Bechtel National, Inc.
Principal Investigator: W. Elliott
Consortium/teaming members: The Electric Power Research Institute (EPRI) as a Sub-Awardee

Front-End Engineering Design (FEED) Study for a Carbon Capture Plant Retrofit to a Natural Gas-Fired Gas Turbine Combined Cycle Power Plant

WORK PERFORMED UNDER AGREEMENT

DE-FE0031848

December 2021

Final Report, December 2021

Sponsoring Program Office: National Energy Technology Laboratory (NETL)

Name of Recipient: Bechtel National, Inc.

Principal Investigator: W. Elliott

Consortium/teaming members: The Electric Power Research Institute (EPRI) as a Sub-Awardee

DISCLAIMER OF WARRANTIES AND LIMITATION OF LIABILITIES

THIS REPORT WAS PREPARED AS AN ACCOUNT OF WORK SPONSORED BY AN AGENCY OF THE UNITED STATES GOVERNMENT. NEITHER THE UNITED STATES GOVERNMENT NOR ANY AGENCY THEREOF, NOR ANY OF THEIR EMPLOYEES, MAKES ANY WARRANTY, EXPRESS OR IMPLIED, OR ASSUMES ANY LEGAL LIABILITY OR RESPONSIBILITY FOR THE ACCURACY, COMPLETENESS, OR USEFULNESS OF ANY INFORMATION, APPARATUS, PRODUCT, OR PROCESS DISCLOSED, OR REPRESENTS THAT ITS USE WOULD NOT INFRINGE PRIVATELY OWNED RIGHTS. REFERENCE HEREIN TO ANY SPECIFIC COMMERCIAL PRODUCT, PROCESS, OR SERVICE BY TRADE NAME, TRADEMARK, MANUFACTURER, OR OTHERWISE DOES NOT NECESSARILY CONSTITUTE OR IMPLY ITS ENDORSEMENT, RECOMMENDATION, OR FAVORING BY THE UNITED STATES GOVERNMENT OR ANY AGENCY THEREOF. THE VIEWS AND OPINIONS OF AUTHORS EXPRESSED HEREIN DO NOT NECESSARILY STATE OR REFLECT THOSE OF THE UNITED STATES GOVERNMENT OR ANY AGENCY THEREOF.

Acknowledgments

The following organization prepared this report:

Bechtel National, Inc.
12011 Sunset Hills
Reston, VA 20190

Principal Investigator
W. Elliott

This work was completed as part of National Energy Technology Laboratory (NETL) research for the U.S. Department of Energy's (DOE) Carbon Capture Program. The authors wish to acknowledge Naomi O'Neil, the NETL Project Manager for this FEED study, for her counsel and support throughout the study.

The authors would like to thank August Benz (Independent), Jonathan Gibbins (University of Sheffield) and Stavros Michailos (University of Sheffield) for their technical contributions throughout the study; Kunlei Liu (University of Kentucky) for reviewing the process and providing technical comments; Des Dillon, Adam Berger, Abhoyjit Bhown, and Yang Du from the Electric Power Institute (EPRI), the sub awardee of this study, for their many technical contributions and for serving as the final report editor and publisher; and Nexant, the technical subcontractor to EPRI.

We are also grateful to Siemen's, the power island equipment supplier, for their assistance in steam turbine interface decision. Finally, and most notably, we thank Joe Lloyd and Darryl Nitschke of Panda Power for allowing the Sherman Power Plant to serve as the basis for this study.

This publication is a corporate document that should be cited in the literature in the following manner:

Front-End Engineering Design (FEED) Study for a Carbon Capture Plant Retrofit to a Natural Gas-Fired Gas Turbine Combined Cycle Power Plant.
Bechtel National, Inc. Reston, VA.
2021.

Abstract

A comprehensive front-end engineering design (FEED) study has been undertaken for a post-combustion capture (PCC) unit located at Panda's Sherman natural gas–combined cycle (NGCC) power plant in Sherman, Texas. This is described in a full and unredacted FEED study report with all supporting documents, numbering over 150, also publicly available.

The PCC unit uses 35 wt% MEA as the solvent to capture 85% of the CO_2 in a slipstream, corresponding approximately to the flow at minimum stable generation to maximize use of the new investment. MEA was selected because extensive information is available for it in the public domain and a previous NGCC retrofit study has shown that it would be comparable in performance and overall costs to a range of proprietary solvents. It is also widely available at low prices. At the design flue gas throughput of 704 kg/s, the PCC unit captures 129 t/h of CO_2. Energy consumption for solvent regeneration is estimated as 3.65 GJ/tCO_2 (of which 0.14 GJ/tCO_2 is provided by waste heat recovery from the CO_2 compressors), with design lean and rich loadings of 0.254 and 0.475 mole CO_2/mole MEA respectively, and an absorber liquid/gas ratio of 1.07.

To maintain a low level of degradation products in the circulating solvent, a semi-continuous thermal reclaimer is used to process the equivalent of a complete plant solvent inventory every 28 days. Reclaiming takes place in two stages with 150°C operating temperature in both. The first stage vents to the stripper at 2.6 bara, allowing the heat in the evaporated water vapor and MEA to be recovered. The second stage vents to the top of the absorber, at near atmospheric pressure. Solvent recovery in the reclaimer is estimated at ≥90%, with net solvent consumption 2 kg MEA/tCO_2 captured. MEA supply cost at the plant site was ascertained to be $1.15/kg delivered, 99% purity, iron and chlorine free. Reclaimer bottoms disposal costs are estimated at $500/t. This cost has been estimated at the high end of liquid hazardous waste haulage and disposal due to lack of actual waste characterization. Actual disposal cost would be expected to be lower when the residuals are fully analyzed and classified.

In addition to heat recovery from the reclaimer, energy consumption for solvent regeneration is reduced by flashing some of the rich solvent, using heat from the CO_2 compressor intercoolers, and returning the resulting semi-lean solvent partway down the absorber.

The overall capital cost for the PCC retrofit is estimated at $477M, including indirect costs, owner's and contractor's costs, and interest during construction; completion is 30 months from notice to proceed. CO_2 absorption equipment, at 34%, is the largest part of this; two cylindrical

stainless steel absorbers are used, internal diameter 11.8 m and 44.3 m straight section, with a superficial gas velocity of 2.76 m/s and a total packing height of 15 m in two beds. Flue gas conveyance and conditioning, via a 6 x 6 m duct, with a water fogging system to reduce flue gas temperatures, accounts for 23% and the stack modifications, cutting a grid of perforations feeding into a transition manifold—a further 7% of capital costs. The solvent stripper and reboilers costs are 17% of the total. CO_2 compression and conditioning account for 19% of capital costs. A centrifugal compressor, send-out pump, and dehydration are used, delivering 151 bara CO_2.

Estimated baseline CO_2 capture costs (both annualized capital and annual O&M together) are \$114.50/tCO_2, dominated by capital recovery charges. For a 70/30 debt-to-equity ratio with 6% interest rate on debt over 15 years and 12% return on equity, plus PCC operation for an average of 5,000 hours per year, these total \$83.10 \$/tCO_2 for just the annualized capital portion. Power plant net output is reduced by 67.3 MW when supplying PCC steam and electricity requirements. The PCC plant is not operated during those limited periods when the Texas ERCOT power grid has elevated prices (up to \$9,000/MWh) (nor when the power plant is not operating), and average foregone electricity revenues are assessed at \$25/MWh, contributing \$13.00/tCO_2 captured. Other costs are maintenance (\$7.00/tCO_2), staffing (\$7.75/tCO_2), solvent replacement (\$2.30/tCO_2), and waste disposal (\$1.35/tCO_2).

At the time of this FEED study, no full-scale NGCC power plants with PCC have been built anywhere in the world; even pilot studies using NGCC flue gas conditions are limited. This leads to a lack of data for process simulation model validation under conditions of interest for commercial NGCC+PCC plants, that is, low CO_2 concentrations, relatively low absorber packing heights, and low liquid-to-gas ratios. MEA concentrations above 30 wt% have also received little previous attention in public domain testing. Slight differences in performance modeling predictions were observed between ProMax® and the MEA Steady-State Model from the Carbon Capture Simulation Initiative (CCSI) running under Aspen Plus® 10, leading to some uncertainty in precise values for the FEED design parameters. In addition, model predictions do not consider the actual variation in performance that can be expected under nominally constant process conditions. During normal operation, the solvent will not be a pure MEA solution but will attain an equilibrium composition as degradation and build-up of impurities are matched by reclaiming. Fouling and so on in service will also degrade component performance (for example, heat exchangers, pumps, and fans). These effects can be assessed based only on realistic long-term testing. The power and PCC plant loads may also, in practice, change rapidly enough for the plant never to achieve complete steady-state operation as process models assume. Transient modelling can be employed but again requires verification.

A pilot testing program is therefore proposed to resolve most of these design uncertainties, generally duplicating all process elements of the full-scale PCC unit apart from CO_2 product compression. The pilot plant will

operate solely on flue gas from the Sherman power plant, accommodating the same frequent shutdowns of up to 48 hours that are expected for the commercial plant, with consequent possible impacts on PCC solvent quality and overall system performance. Pilot plant sizing is based on a stripper column diameter of 0.4 m, which is considered by some packing vendors as the minimum diameter for meaningful test data, with a corresponding absorber diameter of 1.0 m. For test purposes, it will be possible to use 10, 15, or 20 m of packing in the absorber and to assess reduced stripper packing heights. The primary pilot plant test objectives are to confirm the base case mass and energy balances for the PCC unit under design steady-state conditions; assess long-term solvent management requirements and reclaimer performance; confirm emissions levels of MEA, ammonia, and other degradation products in the absorber vent gas during long-term operations; and determine equipment corrosion rates and confirm materials selection. Initial confirmation of CO_2 recovery and heat and mass balances should be possible within a 30- to 60-day test program, but credible confirmation of amine degradation rates, reclaiming effectiveness, emissions rates, and system corrosion should be based on at least a 12-month run. With additional runs—for example, at reduced or increased packing heights—the overall test program would last 18–24 months.

Abbreviations

AASHTO	American Association of State Highway and Transportation Officials
AIC	American Concrete Institute
AISC	American Institute of Steel Construction
ALARP	As Low as Reasonably Practicable
ANSI	American National Standards Institute
B/L	Boundary/Battery Limit
BEA	Bid, Evaluate, Award
BFD	Block Flow Diagram
BFW	Boiler Feedwater
BOP	Balance of Plant
CAPEX	Capital Expenditure
CCR	Central Control Room
CCSI	Carbon Capture Simulation Initiative
CCTV	Closed-Circuit Television System
CGMS	Continuous Gas Monitoring System
CFD	Computational Fluid Dynamics
CRF	Capital Recovery Factor
CRO	Control Room Operator
CT	Cooling Tower
DAHS	Data Acquisition and Handling System
DCS	Distributed Control System
EDG	Emergency Diesel Generator
EIA	Environmental Impact Assessment
EPC	Engineering, Procurement and Construction
ERCOT	Electric Reliability Council of Texas
ESD	Emergency Shutdown
EWS	Engineering Workstation
F&G	Fire and Gas

FEED	Front End Engineering Design
FES	Fire and Explosion Strategy
FLHA	Field Level Hazard Assessment
FREP	Forms, Rebar, Embeds, and Pour
GTG	Gas Turbine Generator
HAZID	Hazard Identification
HAZOP	Hazard Operability
HETP	Height Equivalent to a Theoretical Plate
HMB	Heat and Material Balance
HMI	Human-Machine Interface
HRSG	Heat Recovery Steam Generator
HSE	Health, Safety, and Environment
HSS	Heat Stable Salts
HX	Heat Exchanger
ICE	Instrumentation/Controls/Electrical
IFC	Issued for Construction
ILP	Intermediate Low Pressure
IMS	Information Management System
ISO	International Standards Organization
JHA	Job Hazard Analysis
KO	Knock-Out
L/D	Liquidated Damage
L/G	Liquid to Gas
LMTD	Logarithmic Mean Temperature Difference
LOTO	Lock-out Tag-out
LP	Low Pressure
LSTK	Lump Sum Turnkey
LV	Low Voltage
MCC	Motor Control Center
MEA	Monoethanolamine
MOV	Motor Operated Valve
MP	Medium Pressure
MTOs	Material Take-offs
MV	Medium Voltage

MWe	Megawatts (electrical)
NDE	Nondestructive Examination
NETL	National Energy Technology Laboratory
NFPA	National Fire Protection Association
NGCC	Natural Gas Combined Cycle
NPDES	National Pollutant Discharge Elimination System
NTP	Notice to Proceed
OEM	Original Equipment Manufacturer
OPEX	Operating Expenditure
OSHA	Occupational Safety and Health Administration
P&ID	Piping and Instrumentation Diagram
PCC	Post Combustion Capture
PCCP	Prestressed Concrete Cylinder Pipe
PFD	Process Flow Diagram
PHA	Process Hazard Analysis
PLC	Programmable Logic Controller
PSD	Process Shutdown
RAM	Reliability, Availability, Maintainability
SAS	Safety Automation System
SIL	Safety Integrity Level
SPMT	Self-propelled Motorized Transporter
STCPs	Standard Test and Commissioning Procedures
STG	Steam Turbine Generator
T&L	Traffic* and Logistics
TCEQ	Texas Commission on Environmental Quality
UPS	Uninterruptible Power Supply
USEPA	U.S. Environmental Protection Agency
VDU	Visual Display Unit
VFD	Variable Frequency Drive
VLE	Vapor Liquid Equilibrium
VMS	Vibration Monitoring System
WE	Working Environment

* Additional abbreviations used in HAZOP are defined in Chapter 13.

Table of Contents

Abstract V

Abbreviations IX

Chapter 1: Summary 1-1

1.1 Study Objectives, Key Findings, and Recommendations 1-1

1.1.1 Carbon Capture Retrofit Location and Site 1-1

1.1.2 Sherman NGCC Power Plant 1-3

1.1.3 PCC Plant 1-4

1.2 Capital cost 1-7

1.3 Project Schedule 1-12

1.4 Recommendations for Moving Forward from This FEED 1-13

1.4.1 Modeling Uncertainties for Commercial Design Highlighted During FEED 1-16

1.4.2 Hands-On Approach to Future Development: Pilot 1-18

1.4.3 Managing the Risk 1-21

Chapter 2: Background, Design Basis, and Project Approach 2-1

2.1 Project Description 2-1

2.1.1 Project Overview 2-1

2.1.2 Project Objectives 2-4

2.1.3 Site Selection 2-4

2.2 Design Basis 2-5

2.2.1 Power Plant Design Criteria 2-5

2.2.2 Site Conditions 2-5

2.2.3 NGCC Plant Technical Data 2-6

2.2.4 Natural Gas Composition 2-7

2.2.5 Emission Requirements 2-7

2.2.6 Noise Requirements 2-8

2.2.7 Circulating Water Quality 2-8

2.2.8 Flue Gas to PCC 2-9

2.2.9 Carbon Capture and Compression Plant Design Criteria 2-10
2.3 Project Approach 2-13
2.3.1 Project Team Organization 2-13
2.3.2 Work Process and Tools 2-13
2.3.3 Boards of Technical Consultants 2-14

Chapter 3: PCC Plant Design 3-1
3.1 Process Description 3-1
3.1.1 Overview 3-1
3.1.2 Flue Gas Blower and Quench 3-4
3.1.3 CO_2 Absorption 3-6
3.1.4 Semi-Lean Amine System 3-8
3.1.5 CO_2 Heat Integration and Stripping 3-9
3.1.6 CO_2 Compression and Drying 3-12
3.1.7 CO_2 Pumping and Dense Phase Transfer 3-14
3.1.8 Amine Reclaiming 3-15
3.1.9 Amine Storage 3-17
3.2 Process Performance 3-18
3.3 Process Cooling and Water Balance 3-19
3.4 Pressure Safety Valves and Relief Considerations 3-19
3.4.1 Pressure Relief Philosophy 3-19
3.4.2 Depressurization Philosophy 3-20
3.5 Exhaust, Emissions, and Waste 3-20
3.5.1 Continuous Airborne Emissions 3-20
3.5.2 Fugitive Emissions 3-21
3.5.3 Continuous Liquid Effluent 3-21
3.5.4 Infrequent Liquid Effluent 3-21
3.5.5 Continuous Sludge Effluent 3-22

Chapter 4: Process Equipment and Plant Layout 4-1
4.1 Equipment Selection 4-1
4.2 Major Process Equipment 4-1
4.2.1 Absorber Towers 4-1
4.2.2 Stripper Tower 4-4
4.2.3 Flue Gas Blowers 4-6

4.2.4 Heat Exchange Equipment 4-6
4.2.5 CO_2 Compressors 4-7
4.2.6 CO_2 Drying 4-8
4.2.7 CO_2 Send-Out Pumps 4-9
4.2.8 Reclaimer 4-9
4.3 Carbon Capture Plant Layout 4-9
4.3.1 Health and Safety Considerations 4-9
4.3.2 Arrangement 4-10
4.3.3 Piping 4-13

Chapter 5: Mechanical Utility Systems 5-1
5.1 Utilities Consumptions 5-1
5.2 Steam and Condensate 5-2
5.3 Boiler Feedwater 5-6
5.4 Cooling Water 5-6
5.5 Potable Water 5-6
5.6 Fire Protection Systems 5-6
5.7 Compressed Air 5-7
5.8 Inerting Gases 5-7
5.9 Softened Water/ZLD Distillate 5-7
5.10 Waste Collection and Drains 5-8
5.10.1 Amine Waste 5-8
5.10.2 Wastewater 5-8
5.11 Wastewater Treatment 5-8
5.12 Piping and Insulation 5-8
5.12.1 Piping 5-8
5.12.2 Insulation 5-9

Chapter 6: PCC Plant Electrical Distribution System 6-1
6.1 General 6-1
6.2 Switchgear 6-2
6.3 Transformers 6-3
6.4 Power Factor Correction 6-3
6.5 UPS Power 6-4
6.6 Emergency Diesel Generator 6-5
6.7 Electrical Loads Summary 6-5
6.8 System Studies 6-6

6.9 Hazardous Areas Classification 6-7
6.10 Cable and Raceway 6-7
6.11 Earthing and Lightning Protection..... 6-7
6.12 Lighting 6-7
6.13 Electrical Interfaces 6-7

Chapter 7: Control Systems 7-1
7.1 Overall Control Systems Architecture 7-1
7.2 Controls Philosophy and Approach: Human Factors 7-1
7.2.1 General Control Philosophy 7-1
7.2.2 Normal Operation 7-1
7.2.4 Human Factors..... 7-4
7.3 Safety and Shutdown Analysis and Provisions 7-6
7.3.1 Emergency Shutdown System 7-6
7.3.2 Process Shutdown System 7-6
7.3.3 Fire and Gas Detection System 7-6
7.4 Safety and Automation System 7-7
7.5 Gas and Emissions Monitoring and Metering 7-8
7.5.1 Continuous Gas Monitoring System 7-8
7.5.2 Liquid Emissions 7-10
7.6 Startup and Shutdown Considerations..... 7-11
7.6.1 Startup..... 7-11
7.6.2 Shutdown 7-13
7.7 Primary Control System and Equipment 7-14
7.8 Central Control Room Layout..... 7-15
7.9 Local Equipment/Instrument Room Layouts..... 7-16
7.9.1 CGMS Shelter..... 7-17
7.9.2 Compressor Building Analyzer Room 7-17
7.10 Packaged Equipment Controls Interface..... 7-17
7.11 Field Instruments and Devices 7-17
7.12 External Controls Systems Interfaces..... 7-17
7.13 Major Upset Conditions 7-17
7.13.1 Flue Gas..... 7-17
7.13.2 High/Low Level Solvent 7-18
7.13.3 High/Low Pressure 7-19
7.13.4 Pump Trips..... 7-19
7.13.5 Loss of Reboiler Steam..... 7-20

7.13.6 Compressor Trip 7-20
7.14.7 Electrical 7-20

Chapter 8: Civil, Structural, and Architectural Design 8-1
8.1 Design Criteria and Features 8-1
8.1.1 Site Work 8-1
8.1.2 Foundations 8-1
8.1.3 Structural Steel 8-3
8.1.4 Architectural 8-3
8.1.5 Underground Utilities 8-3
8.2 Structural Materials Selections 8-3
8.2.1 Concrete 8-3
8.2.2 Anchor Bolts and Embedment 8-4
8.2.3 Structural and Miscellaneous Steel 8-4
8.3 Design Modifications for Tie-Up with NGCC 8-4
8.3.1 HRSG Stack Modifications 8-4
8.3.2 Flue Gas Ductwork 8-6
8.3.3 Pipe Rack 8-8
8.3.4 Circulating Water/Cooling Tower Modification 8-8
8.4 Buildings and Enclosures 8-8
8.4.1 Compressor Building 8-9
8.4.2 Flue Gas Blower Enclosures 8-9
8.4.3 Control/Workshop/Laboratory Building 8-9
8.4.4 Electrical Building 8-10
8.4.5 Continuous Gas Monitoring System Building 8-10
8.5 Transformer Foundation and Oil Containment 8-10
8.6 Tank Bund Area 8-10
8.7 Building Heating, Ventilation, and Air Conditioning 8-10
8.7.1 Compressor Building 8-10
8.7.2 Flue Gas Blower Enclosures 8-10
8.7.3 Control/Workshop/Laboratory Building 8-11
8.7.4 Electrical Building 8-11
8.8 Access, Paving, and Landscaping 8-11
8.8.1 Access Roads and Paved Areas 8-11
8.8.2 Landscaping 8-12
8.9 Painting and Coating 8-12

Chapter 9: Overall Facility Performance 9-1

9.1 PCC Plant Reliability/Availability/ Maintainability Analysis 9-1

9.1.1 Reliability Methodology 9-1

9.1.2 Reliability Estimation 9-5

9.1.3 Reliability and Availability Results 9-7

9.1.4 Maintainability 9-7

9.2 Emissions 9-7

9.3 Noise 9-7

Chapter 10: Materials Technology 10-1

10.1 Materials and Selection Basis 10-1

10.1.1 Amine Service 10-1

10.1.2 CO2 Service 10-2

10.1.3 Utility Services 10-2

10.2 Paintings and Coatings 10-2

Chapter 11: Environmental, Safety, and Health 11-1

11.1 ES&H Considerations in Design 11-1

11.2 Occupational Health and Safety 11-1

11.2.1 Working Environment 11-1

11.2.2 Project Hazards 11-2

11.3 Environment 11-2

11.4 Fire and Explosion Strategy 11-2

11.4.1 Fire and Explosion Hazards 11-2

11.4.2 Ignition Source Control 11-3

11.4.3 Fire and Gas Detection 11-3

11.4.4 Depressurizing 11-3

11.4.5 Active Fire Protection 11-3

11.4.6 Passive Fire Protection 11-4

11.4.7 Emergency Power Systems 11-4

11.4.8 Drainage Systems 11-4

11.5 Escape, Evacuation, and Rescue Strategy 11-4

11.5.1 Escape Strategy 11-4

11.5.2 Evacuation Strategy 11-5

11.5.3 Rescue Strategy 11-5

11.6 Public Health 11-5

11.7 Observations and Recommendations....11-5
11.7.1 Working Environment: Occupational Health....11-5
11.7.2 Noise and Vibration....11-6
11.7.3 Fire and Explosion Strategy....11-6
11.7.4 Escape, Evacuation, and Rescue Strategy/Escape Routes....11-6
11.7.5 Process Hazard Analysis: HAZID and HAZOP....11-6
11.7.6 Layout Safety....11-6
11.7.7 Hazardous Area Classification/Ignition Source Control....11-7

Chapter 12: Operations and Maintenance....12-1
12.1 Operations Philosophy....12-1
12.2 Operations Training and Staffing....12-1
12.2.1 Training....12-1
12.2.2 Operating Staff....12-1
12.3 Operations Particular Requirements....12-4
12.4 Maintenance Philosophy....12-4
12.5 Maintenance Training and Staffing....12-4
12.6 Maintenance Program Overview....12-4
12.7 Spare Parts....12-6
12.8 Consumables....12-6

Chapter 13: Hazards and Safety Analysis....13-1
13.1 HAZID....13-1
13.1.1 Introduction....13-1
13.1.2 Team Members....13-1
13.1.3 Scope and Methodology....13-1
13.1.5 Findings....13-2
13.2 HAZOP....13-4
13.2.1 Introduction....13-4
13.2.2 HAZOP Methodology....13-4
13.2.3 Team Members....13-8
13.2.4 HAZOP Worksheet Interpretation....13-9
13.2.5 HAZOP Risk Ranking....13-10
13.2.6 HAZOP Top Risk Findings....13-11
13.2.7 Document List....13-14

Chapter 14: Risk Management 14-1

14.1 Purpose 14-1

14.2 Approach 14-1

14.3 Risk Register 14-1

14.3.1 General 14-1

14.3.2 Format 14-1

14.3.3 Probability and Impact 14-2

14.4 Top Risks 14-2

14.5 HAZID/HAZOP Risks 14-2

14.6 Emissions and Public Safety Risks 14-2

14.7 Technology Risk 14-4

Chapter 15: Procurement, Construction, and Commissioning 15-1

15.1 Contracting and Purchasing Strategy 15-1

15.1.1 Introduction 15-1

15.1.2 Traffic and Logistics Plan 15-1

15.1.3 Identification of Critical Equipment 15-2

15.1.4 Strategies for Specific Commodities 15-2

15.1.5 Procurement and Contracting Plan Options 15-3

15.2 Construction Approach and Overview 15-3

15.2.1 Responsibilities 15-4

15.2.2 General Approach 15-4

15.2.3 Mobilization 15-4

15.2.4 Earthwork, Underground Utilities, and Foundations 15-4

15.2.5 Mechanical Equipment 15-5

15.2.6 Structural Steel 15-5

15.2.7 Piping 15-5

15.2.8 Electrical 15-6

15.2.9 Instrumentation 15-6

15.2.10 Roads 15-6

15.2.11 Field Fabrication Yard 15-6

15.2.12 System Turnover and Construction Completion 15-6

15.3 Constructability Reviews 15-7

15.4 Construction Plan 15-7

15.4.1 PCC Plant 15-8

15.4.2 Modifications Within the NGCC -Plant 15-9

15.5 Commissioning Approach 15-10

15.5.1 Cold Commissioning 15-11
15.5.2 Hot Commissioning 15-12
15.6 Schedule Overview 15-17
15.6.1 Key Schedule Durations 15-17
15.6.2 Critical Path Activities 15-17
15.6.3 Schedule Basis and Assumptions 15-17

Chapter 16: Cost and Economics 16-1
16.1 Cost Estimate 16-1
16.2 Contingency Analysis 16-5
16.3 Qualifications and Assumptions 16-6
16.4 OPEX Cost Estimate 16-7
16.5 Annual Operating Costs 16-8
16.6 Economics 16-9
16.6.1 Sensitivity Analysis 16-10

Chapter 17: Uncertainties and Optional Functionalities 17-1
17.1 Simulation Approach 17-1
17.2 Simulation Uncertainties 17-4
17.2.1 Background 17-4
17.2.2 Modeling Software and Pilot Data Comparisons 17-5
17.2.3 Modeling Uncertainties for Commercial Design 17-9
17.3 CO_2 Compression 17-9
17.4 Emissions, Solvent Degradation, and Reclaiming 17-9
17.4.1 Emissions 17-9
17.4.2 Solvent Degradation 17-10
17.4.3 Reclaiming 17-10
17.5 Design Margins 17-10
17.5.1 Columns 17-11
17.5.2 Rotating Equipment 17-11
17.5.3 Vessels 17-11
17.5.4 Shell-and-Tube Exchangers 17-11
17.5.6 Plate and Frame Exchangers 17-11
17.6 Pilot Plant Testing 17-11
17.6.1 Pilot Plant Equipment Size 17-12
17.6.2 Pilot Test Objectives 17-15
17.6.3 Pilot Test Duration 17-15

17.6.4 Pilot Reclaimer System 17-15
17.7 Process Scheme Enhancements 17-17
17.7.1 PCC Plant Mass and Energy Balance Including Continuous Reclaimer Operation 17-17
17.7.2 Single-Stage Continuous Reclaimer 17-17
17.7.3 Stripper Operation at Lower Reboiler Pressure 17-17
17.7.4 Semi-Lean Amine System Optimization 17-17
17.7.5 Alternative Water Source for Flue Gas Foggers 17-17
17.7.6 Oxygen Removal from Product Carbon Dioxide 17-18
17.8 Design Codes and Standards 17-18

Chapter 18: References 18-1
In Text Cited References 18-1
Additional References Used in this Study but not Cited in Text 18-2

List of Figures

Figure 1-1 Texas Map Showing Sherman and the NGCC Power Plant Location..... 1-2

Figure 1-2 Aerial image of Sherman Power Plant Site..... 1-2

Figure 1-3 Block Flow Diagram.....1-6

Figure 1-4 Cost for PCC Areas as Percent of Contractor's Cost.....1-9

Figure 1-5 Costs as Percentage of Contractor's Cost.....1-9

Figure 1-6 Cost Sensitivities and Uncertainty Levels Tornado Diagram 1-12

Figure 1-7 Simplified Milestone Schedule 1-13

Figure 1-8 R. R. Bottoms Patent, 1930.....1-14

Figure 1-9 Process Flow Diagram for Pilot Plant..... 1-19

Figure 2-1 R. R. Bottoms Process, 1930 (full patent in Appendix AA).....2-2

Figure 2-2 Proximity of Saline Aquifers (dark green) and Sedimentary Basins (light green) to Sherman, Texas.....2-3

Figure 2-3 Existing Oil and Gas Wells in Grayson County, Texas 2-4

Figure 2-4 Aerial Image of Sherman Power Plant Site (from Google Maps) Indicating PCC Location and Fabrication Yard Areas 2-11

Figure 3-1 Block Flow Diagram.....3-2

Figure 3-2 Flue Gas Blower and Quench Diagram 3-4

Figure 3-3 Absorber Diagram 3-6

Figure 3-4 Semi-Lean Amine System Diagram.....3-8

Figure 3-5 Rich/Lean Amine Heat Exchange Diagram 3-9

Figure 3-6 Stripper Diagram 3-10

Figure 3-7 CO_2 Compression Diagram 3-12

Figure 3-8 CO_2 Drying and Pumping Diagram 3-14

Figure 3-9 Amine Reclaimer Diagram 3-15

Figure 3-10 Rich and Lean Amine Storage Diagram 3-17

Figure 4-1 Absorber Vessel 4-3

Figure 4-2 Stripper Vessel 4-5

Figure 4-3 CO_2 Phase Diagram 4-8

Figure 4-4 PCC Plant and Fab Yard Areas and Proximity to NGCC Power Plant 4-11

Figure 4-5 Sherman NGCC Power Plant Layout 4-12

Figure 5-1 Existing Crossover Pipe for LP Steam Extraction 5-3

Figure 5-2 Existing Crossover Pipe for LP Steam Extraction: Alternative View 5-4

Figure 5-3 Sketch showing LP Extraction and Backpressure Valve 5-5

Figure 6-1 PCC Plant Electrical Building Layout 6-2

Figure 6-2 PCC Plant UPS System Diagram 6-5

Figure 7-1 Stripper Reflux System 7-3

Figure 7-2 Conceptual Block Diagram for F&G Detection System 7-7

Figure 7-3 Conceptual Block Diagram for DCS and PSD System 7-8

Figure 7-4 Conceptual Block Diagram for CGMS System 7-9

Figure 7-5 Conceptual Control Room Layout (not to scale) 7-16

Figure 8-1 HRSG Stack: New Steel Support Structure and Stack Hole Pattern 8-5

Figure 8-2 Ductwork Layout with Support Steel Structure 8-7

Figure 9-1 Block Diagram of PCC Systems 9-1

Figure 9-2 Fogger System (System 1) 9-2

Figure 9-3 Flue Gas Blowers System (System 2) 9-2

Figure 9-4 Absorber Tower System (System 3) 9-2

Figure 9-5 Stripper Tower System (System 4) 9-3

Figure 9-6 Amine Reclaimer System (System 5) 9-3

Figure 9-7 CO_2 Compression and Drying System (System 6) 9-4

Figure 9-8 CO_2 Send-Out System (System 7) 9-4

Figure 9-9 Balance-of-Plant System (System 8) 9-4

Figure 12-1 Plant Staffing Chart 12-3

Figure 12-2 Operating Maintenance Template 12-5

Figure 13-1 PFDs: Markup of Nodes: Blower /Quench Section 13-19

Figure 13-2 PFDs: Markup of Nodes: Absorber Section 1 13-20

Figure 13-3 PFDs: Markup of Nodes: Absorber Section 2 13-21

Figure 13-4 PFDs: Markup of Nodes: Lean Amine Cooling 1..... 13-22

Figure 13-5 PFDs: Markup of Nodes: Lean Amine Cooling 2 13-23

Figure 13-6 PFDs: Markup of Nodes: Amine Stripper 13-24

Figure 13-7 PFDs: Markup of Nodes: Amine Reclaimer 13-25

Figure 13-8 PFDs: Markup of Nodes: Compression and Drying 1 .13-26

Figure 13-9 PFDs: Markup of Nodes: Compression and Drying 2 13-27

Figure 15-1 Cold Commissioning Activities.....15-12

Figure 15-2 Hot Commission Activities 15-15

Figure 15-3 High-Level Schedule of Commissioning Activities..... 15-16

Figure 15-4 Milestone Schedule (Part A) 15-18

Figure 15-5 Milestone Schedule (Part B) 15-19

Figure 15-6 PCC Plant Construction Plan (Month 10) 15-20

Figure 15-7 PCC Plant Construction Plan (Month 11) 15-21

Figure 15-8 PCC Plant Construction Plan (Month 12)..... 15-22

Figure 15-9 PCC Plant Construction Plan (Month 13) 15-23

Figure 15-10 PCC Plant Construction Plan (Month 14)..... 15-24

Figure 15-11 PCC Plant Construction Plan (Month 15)..... 15-25
Figure 15-12 PCC Plant Construction Plan (Month 16)..... 15-26
Figure 15-13 PCC Plant Construction Plan (Month 17)..... 15-27
Figure 15-14 PCC Plant Construction Plan (Month 18)..... 15-28
Figure 15-15 PCC Plant Construction Plan (Month 19)..... 15-29
Figure 15-16 PCC Plant Construction Plan (Month 20)..... 15-30
Figure 15-17 PCC Plant Construction Plan (Month 21)..... 15-31
Figure 15-18 PCC Plant Construction Plan (Month 22)..... 15-32
Figure 15-19 PCC Plant Construction Plan (Month 23)..... 15-33
Figure 15-20 PCC Plant Construction Plan (Month 24)..... 15-34
Figure 15-21 PCC Plant Construction Plan (Month 25)..... 15-35
Figure 15-22 PCC Plant Construction Plan (Month 26)..... 15-36
Figure 15-23 PCC Plant Construction Plan (Month 27)..... 15-37
Figure 15-24 PCC Plant Construction Plan (Month 28)..... 15-38
Figure 15-25 Sherman Power Plant Construction Plan (Month 10)..... 15-39
Figure 15-26 Sherman Power Plant Construction Plan (Month 11)..... 15-40
Figure 15-27 Sherman Power Plant Construction Plan (Month 12)..... 15-41
Figure 15-28 Sherman Power Plant Construction Plan (Month 13)..... 15-42
Figure 15-29 Sherman Power Plant Construction Plan (Month 14)..... 15-43
Figure 15-30 Sherman Power Plant Construction Plan (Month 15)..... 15-44
Figure 15-31 Sherman Power Plant Construction Plan (Month 16)..... 15-45
Figure 15-32 Sherman Power Plant Construction Plan (Month 17)..... 15-46

Figure 15-33 Sherman Power Plant Construction Plan (Month 18)..... 15-47

Figure 15-34 Sherman Power Plant Construction Plan (Month 19) 15-48

Figure 15-35 Sherman Power Plant Construction Plan (Month 20)..... 15-49

Figure 15-36 Sherman Power Plant Construction Plan (Month 21)..... 15-50

Figure 15-37 Sherman Power Plant Construction Plan (Month 22a) 15-51

Figure 15-38 Sherman Power Plant Construction Plan (Month 22b) 15-52

Figure 16-1 Cost for PCC Areas as Percent of Contractor's Cost ... 16-4

Figure 16-2 Costs as Percentage of Contractor's Cost 16-5

Figure 16-3 Estimate Uncertainty Probability Chart..... 16-6

Figure 16-4 Cost Sensitivities and Uncertainty Levels Tornado Diagram 16-11

Figure 17-1 CCSI Model Absorber Liquid Temperature Profile 17-6

Figure 17-2 ProMax Model Absorber Liquid Temperature Profile ... 17-6

Figure 17-3 Process Flow Diagram for Pilot Plant..... 17-14

Figure 17-4 Process Flow Diagram for Single-Stage Pilot Reclaimer..... 17-16

List of Tables

Table 1-1 Power Plant Data 1-3

Table 1-2 Power Plant Emission Limits..... 1-4

Table 1-3 Power Plant Flue Gas Condition 1-4

Table 1-4 Board of Technical Review 1-5

Table 1-5 Summary of PCC Process Values..... 1-7

Table 1-6 Capital Cost Summary 1-8

Table 1-7 Annualized Capital Cost Assumptions 1-10

Table 1-8 Basis of Operating Cost 1-10

Table 1-9 Annual Operating Cost (excludes capital cost recovery)..... 1-11

Table 1-10 Annual Operating Cost (costs per tonne CO2 captured at 5,000 hrs/yr—excludes capital cost recovery) 1-11

Table 1-11 Simplified Milestone Schedule[1].....1-12

Table 1-12 Comparison of ProMax® and Aspen Simulation Results.....1-15

Table 1-13 CCSI Capture Rate as a Function of Lean Loading.....1-15

Table 1-14 CCSI Reboiler Duty as a Function of Lean Loading 1-16

Table 1-15 CCSI/Aspen 10 Model (debugged); Various Semi-Lean Injection Levels with 10 m of Packing 1-17

Table 1-16 CCSI/Aspen 10 Model (debugged); various Semi-Lean Injection Levels with 15 m of Packing.....1-18

Table 2-1 Key Sherman Plant Design Criteria.....2-5

Table 2-2 Power Plant Data 2-6

Table 2-3 Natural Gas Composition 2-7

Table 2-4 Emission Limits 2-7

Table 2-5 Circulating Water Quality 2-8

Table 2-6 Flue Gas Conditions 2-10

Table 2-7 CO_2 Product Specifications 2-12

Table 3-1 Summary of Process Values 3-3

Table 3-2 Major Process Streams 3-18

Table 3-3 Airborne Emissions (per absorber) 3-21

Table 3-4 Process Stream Composition Assessment 3-22

Table 3-5 Waste Stream Composition Assessment 3-22

Table 4-1 Absorbers (T-101 and T-102) 4-2

Table 4-2 Stripper (T-103) 4-4

Table 4-3 Flue Gas Blowers (MA-101 and MA-102) 4-6

Table 4-4 List of Heat Exchangers 4-7

Table 4-5 CO_2 Drying Package (MS-104) 4-9

Table 5-1 Utility Requirements 5-1

Table 6-1 Transformer Ratings and Design Features 6-3

Table 6-2 Power Capacitor Stages 6-4

Table 6-3 Electrical Loads Summary 6-6

Table 6-4 Electrical System Studies Summary 6-6

Table 7-1 Local Grab Sample Points 7-5

Table 7-2 Gas Analysis Parameters and Analyzer Type 7-10

Table 7-3 Online Liquid Analysis 7-10

Table 7-4 Shutdown Conditions 7-14

Table 8-1 Major Equipment Dimensions and Weights 8-2

Table 8-2 Buildings and Enclosure Sizes 8-8

Table 8-3 Interior Finishes 8-9

Table 8-4 Type of Roads and Paved Surfaces 8-12

Table 9-1 Component Reliability Data 9-5

Table 9-2 System Reliability 9-6

Table 10-1 Paintings and Coatings 10-3

Table 12-1 List of Consumables 12-7

Table 13-1 HAZID Team Members 13-1

Table 13-2 Examples of HAZID Findings 13-3

Table 13-3 List of Nodes and Node Intents 13-5

Table 13-4 Risk Matrix Used for HAZOP 13-7

Table 13-5 HAZOP Team Members 13-8

Table 13-6 HAZOP Team Members Attendance 13-8

Table 13-7 Abbreviations 13-9

Table 13-8 Top Risk Identified HAZOP Scenarios 13-11

Table 13-9 Document List for FEED HAZOP Study 13-14

Table 14-1 Summary of Major Risks and Mitigation Measures 14-2

Table 14-2 Risk Register 14-5

Table 16-1 Capital Cost Estimate Summary 16-1

Table 16-2 Contingency Chart 16-6

Table 16-3 Annualized Capital Cost Assumptions 16-7

Table 16-4 Basis of Operating Cost 16-8

Table 16-5 Annual Operating Cost; Excludes Capital Cost Recovery 16-8

Table 16-6 Annual Operating Cost; Costs per Tonne CO_2 Captured at 5,000 Hrs/Yr—Excludes Capital Cost Recovery 16-9

Table 16-7 Operating Hours Impact on Capacity Factor and Capital Cost 16-9

Table 16-8 Total Annual Cost; 5,000 hrs per year basis 16-10

Table 16-9 Total Cost per Tonne CO_2 Captured (5000 hrs per year basis) 16-10

Table 16-10 Cost Sensitivities and Uncertainty Levels 16-11

Table 17-1 Comparison of Simulation Models 17-1

Table 17-2 Comparison of ProMax® and CCSI/Aspen Simulation Results 17-3

Table 17-3 Comparison Between NCCC 6-m Packing Data and CCSI Software Predictions 17-7

Table 17-4 Comparison, for a Fixed Lean Loading, Between Predicted CCSI/Aspen Capture Rates as a Function of Packing Height and ProMax® Equilibrium Stage Predictions.....17-7

Table 17-5 CCSI Capture Rate as a Function of Lean Loading with Variable L/G.....17-8

Table 17-6 CCSI/Aspen Reboiler Duty as a Function of Lean and Rich Loadings and L/G ratio.....17-8

Chapter 1: Summary

1.1 Study Objectives, Key Findings, and Recommendations

This DOE-funded and Bechtel-led study was conducted to prepare a front-end engineering design (FEED) for a carbon capture and compression facility that captures approximately 85% CO_2 from the flue gas directed from a natural-gas combined-cycle (NGCC) plant. The design is based on using a low-cost generic solvent. The study includes cost estimates, quantities, and schedule for installing the carbon capture and compression plant at the Sherman combined-cycle plant in Texas.

Transportation of CO_2 and its ultimate use are not part of this study, but the location selected offers enhanced oil recovery opportunities and has saline aquifers and sedimentary basins for potential CO_2 storage.

To provide the greatest transparency and utility from the results of this study, an open-access philosophy was adhered to for this project and all aspects of the capture unit design are non-proprietary. These are summarized in this full and unredacted FEED study report, along with supporting drawings and data sheets—numbering over 150 documents that are also publicly available in the accompanying report appendices.

Key findings are as follows:

- The study estimated baseline CO_2 capture costs (both annualized capital and annual operations and maintenance [O&M] together based on current pricing) at \$114.50/tCO_2, were dominated by capital recovery charges. For a 70/30 debt-to-equity ratio with 6% interest rate on debt over 15 years and 12% return on equity—plus post-carbon capture (PCC) operation for an average of 5,000 hours per year—these total \$83.10/tCO_2 for just the annualized capital portion. In terms of energy penalty, the Sherman power plant net output reduced by 67.3 MW when supplying PCC steam and electricity requirements.
- The PCC plant is not intended to be operated during limited periods when the Texas ERCOT power grid has elevated prices (up to \$9,000/MWh) or when the power plant is not operating. Average foregone electricity revenues are assessed at \$25/MWh, contributing \$13.00/tCO_2 captured. Other costs are maintenance (\$7.00/tCO_2), staffing (\$7.75/tCO_2), solvent replacement (\$2.30/tCO_2), and waste disposal (\$1.35/tCO_2).
- A pilot testing program is proposed to resolve any design uncertainties highlighted in the report, generally duplicating all process elements of the full-scale PCC unit apart from CO_2 product compression.

1.1.1 Carbon Capture Retrofit Location and Site

The PCC plant will be located at Panda Power's Sherman NGCC power plant in Sherman, Texas. See Figures 1-1 and 1-2 for site details.

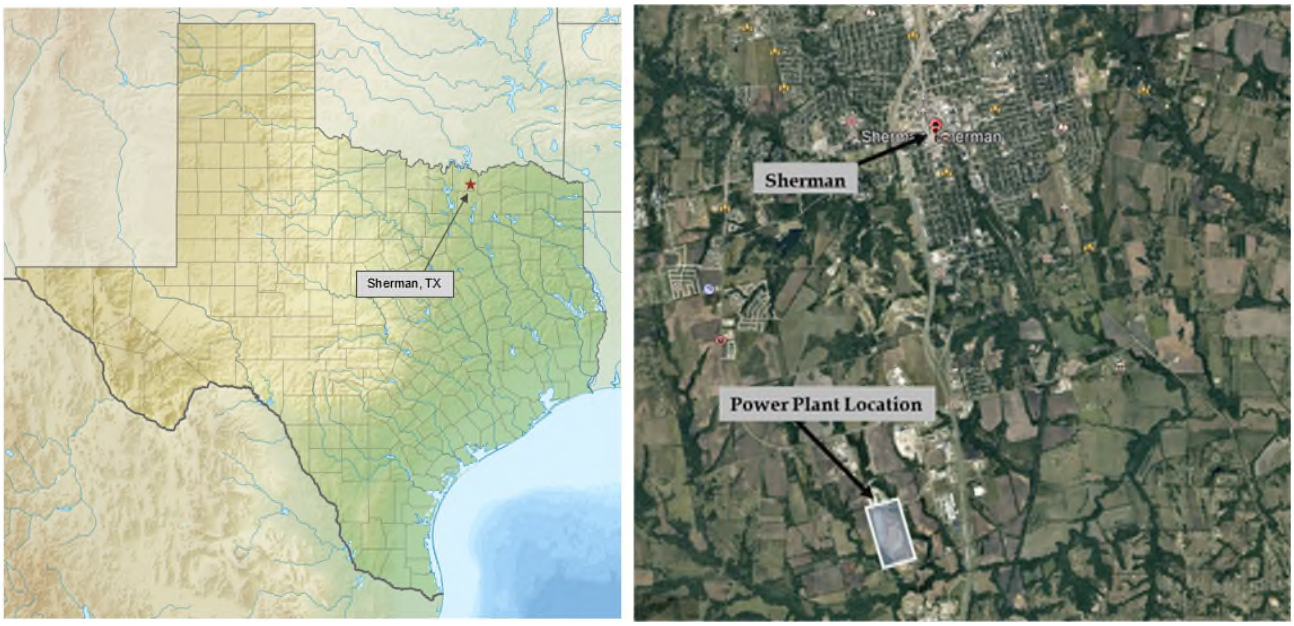

Figure 1-1

Texas Map Showing Sherman and the NGCC Power Plant Location

(Source: Wikipedia and Google)

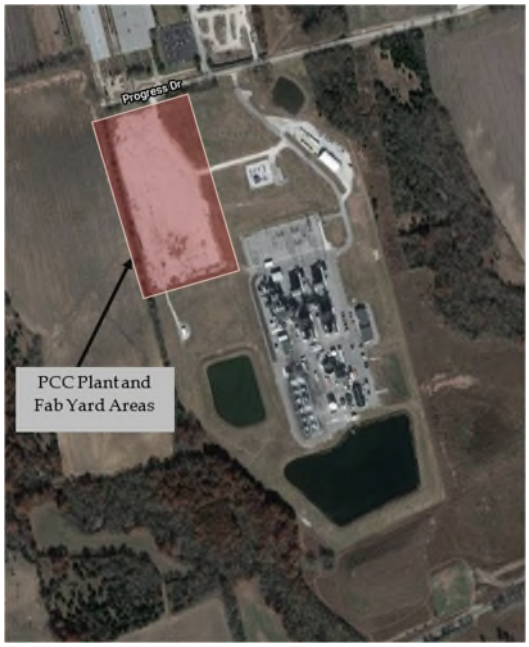

Figure 1-2

Aerial image of Sherman Power Plant Site

(from Google Maps) with Indication of PCC Location and Fabrication Yard Areas

1.1.2 Sherman NGCC Power Plant

Sherman power plant is a 758 MWe NGCC power plant, commissioned in 2014 and owned by Panda Power. The plant has two Siemens F class combustion turbines, two horizontal design triple-pressure heat recovery steam generators (HRSGs), and one Siemens' condensing reheat steam turbine. Cooling is provided by a 12-cell, mechanical induced draft, counterflow cooling tower at a design temperature of 28.6°C.

The design parameters for the NGCC power plant are shown in Table 1-1.

Table 1-1

Power Plant Data

	Units	Case 1 2x2x1 Operation Duct Burners-ON	Case 2 2x2x1 Operation Duct Burners-OFF
Gas Turbine Output (gross)	MW	205, each	196.4, each
Steam Turbine Output (gross)	MW	330.6	221.4
Net Plant Output	MW	719.2	594.1
Net Plant Heat Rate, LHV	KJ/kwh (Btu/kwh)	6721 (6370)	6510 (6170)
HP Turbine Inlet Flow	kg/hr (lb/hr)	709,177 (1,563,467)	449,673 (991,360)
HP Turbine Inlet Pressure	bara (psia)	152.58 (2213.0)	97.28 (1410.9)
HP Turbine Inlet Temperature	°C (°F)	564.8 (1048.7)	541.6 (1006.8)
IP Turbine Inlet Flow	kg/hr (lb/hr)	775,456 (1,709,588)	529,773 (1,167,949)
IP Turbine Inlet Pressure	bara (psia)	34.43 (499.4)	23.51 (341.0)
IP Turbine Inlet Temperature	°C (°F)	554.2 (1029.6)	547.8 (1018.0)
LP Turbine Inlet Flow	kg/hr (lb/hr)	835,918 (1,842,884)	601,732 (1,326,592)
LP Turbine Inlet Pressure	bara (psia)	5.41 (78.5)	3.90 (56.6)
LP Turbine Inlet Temperature	°C (°F)	290.7 (555.3)	291.2 (556.1)
Flue Gas Flow	kg/hr (lb/hr)	3,964,553 (8,740,344)	3,700,080 (8,157,280)
Stack Temperature	°C (°F)	84.6 (184.3)	92.2 (198)

As can be seen in Table 1-1, the flue gas temperature for the unfired case is higher. The flue gas temperature at the stack is lower in the fired case because the feedwater flow in the economizer section of the HRSG is greater in the fired case compared to the unfired case; therefore, more heat is removed from the flue gas as it passes through the economizer section before exiting the HRSG. Therefore, the unfired duct burner case (Case 2) is the design case for the PCC FEED study, due to the higher flue gas temperature and resulting cooling requirements.

Statutory emissions requirements for the Sherman NGCC power plant are provided in Table 1-2. The emissions requirements from the PCC are expected to be similar.

Table 1-2

Power Plant Emission Limits

	Case 1	Case 2
NOx ppmvd @15% O_2 (24-hr rolling avg)	2	2
NH_3 ppmvd @15% O_2 (3-hr rolling avg)	10	10
CO, ppmvd @15% O_2 (3-hr rolling avg)	15	10
VOC, ppmvd @15% O_2 (3-hr rolling avg)	4	1
Particulate matter, lbm/hr	15	10

1.1.3 PCC Plant

The composition of the flue gas emitted from the NGCC plant is provided in Table 1-3. The amount of flue gas diverted to the PCC plant is also given. The amount and therefore size of the PCC selected for study is approximately 60% of the power plant sizing. This is done to attempt to make maximum usage of the new investment in the PCC plant. Capacity factors for fossil units are continuing to decrease in the ERCOT[1] region; the anomalies of the ERCOT system are covered in Section 2.2.8 of this report. The PCC plant captures approximately 85% CO_2 from the flue gas, which amounts to 129 tonnes/hr of CO_2 based on the design flow.

Table 1-3

Power Plant Flue Gas Condition

Parameter	Normal
Mass flow (design case) (kg/s) diverted to PCC	704
Temperature (°C)	92.2
Composition (Mass Fraction, %)	
Oxygen	14.1
Nitrogen	73.9
Argon	1.2
Water	4.8
CO_2	6.0
NO	0.00019
NO_2	3.2E-05
NH_3	0.0004
SO_2	6.7E-05

[1] Electric Reliability Council of Texas (ERCOT) is the independent system operator for the region, managing about 90% of the state's electric load.

As of 2020, no full-scale commercial PCC plants of this size are operational on NGCC flue gas. Simulation models and piloting data in the public domain are dominated by coal-fired flue gas applications. For these reasons, the study included modeling uncertainties evaluation and used a cold eye review with subject matter experts for the process design area of the study. The members of that review are listed in Table 1-4 and their findings contained in Appendix B.

Table 1-4

Board of Technical Review

Name	Affiliation	Location
Kunlei Liu (KL)	University of Kentucky	Kentucky
Gus Benz	Consultant	Hillsboro, CA
Jon Gibbins	University of Sheffield	Sheffield, England
Stavros Michailos	University of Sheffield	Sheffield, England
Des Dillon	EPRI	Palo Alto, California
Adam Berger	EPRI	Palo Alto, California
Abhoyjit Bhown	EPRI	Palo Alto, California
Yang Du	EPRI	Palo Alto, California

The carbon capture process employed is depicted in Figure 1-3. The flue gas directed from NGCC is cooled to saturation temperature by spraying water before it enters the absorbers where CO_2 is removed using 35 wt% MEA solution. The rich amine from the absorbers is regenerated for reuse by liberating the CO_2 from the amine solution in a refluxed steam-reboiler stripper. Low-pressure (LP) steam to the reboiler is supplied from the existing NGCC steam turbine crossover piping. The CO_2 removed in the stripper is compressed and dried. Liquefied CO_2 is then pumped to dense phase conditions and sent to the transport pipeline. The lean amine returns to the absorber. A two-stage, dual-pressure, semi-continuous thermal reclaimer unit is provided to remove non-volatile thermal and oxidative degradation products including heat stable salts (HSS) from the lean amine. In addition to heat recovery from the reclaimer, energy consumption for solvent regeneration is reduced by flashing some of the rich solvent, using heat from the CO_2 compressor intercoolers, and returning the resulting semi-lean solvent partway down the absorber.

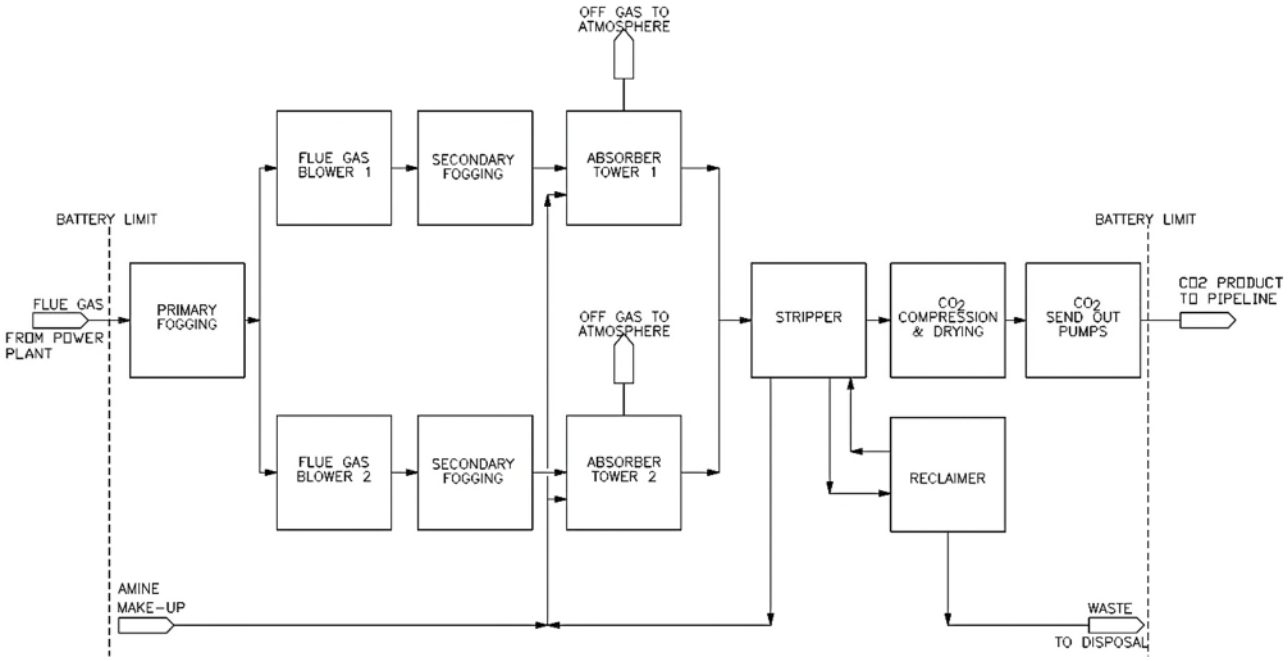

Figure 1-3

Block Flow Diagram

MEA was selected for the study because more information is available for it in the public domain than for any other solvent. The solvent supplier which was assumed for this FEED study, priced MEA at $0.52/lb (Iron and Chloride Free Grade >99% Assay, including CIP[2] Sherman, Texas). See Appendix Y for the complete list of solicited suppliers and Appendix V for a sample MEA safety data sheet. A previous study completed in 2015 for the Ministry of Energy in Mexico, funded by the World Bank, determined there was little economic difference among the proprietary solvent capture costs and an MEA base case for NGCC flue gas.

An overview of the capture process parameters is provided in Table 1-5.

[2] Carriage and Insurance Paid To

Table 1-5

Summary of PCC Process Values

Flue Gas From NGCC Sm^3/hr; kg/s	2,110,000 Sm^3/hr; 704 kg/s
Flue Gas Velocity in Absorbers (superficial) m/s	2.76 m/s
Liquid to Gas ratio (L/G) kg/kg	1.07
kg Steam (3.3 bara) per kg CO_2 captured kg/kg	1.62
Heat Usage; Steam Flow kg/h	208,100 kg/h
GJ/ tonne of CO_2 captured	3.65*
Solvent Usage kg MEA / tonne CO_2 captured	2 kg/tonne
Lean Loading mole CO_2 per mole MEA	0.254
Lean Solvent Temperature °C	49
Rich Loading mole CO_2 per mole MEA	0.475
Total Pressure Drop in each Absorber KPa	6.10 kPa
Reclaimer Feed kg/hr	2605 kg/hr
Reclaimer Residue kg/h	354 kg/h

* 0.14 GJ/tonne of CO_2 captured is provided by the steam cooling of CO_2 compressors.

The Sherman Power plant net output is reduced by 67.3 MW when supplying PCC steam and electricity requirements. Approximately 29 MW reduction is due to PCC auxiliary loads, as shown in Appendix M.

1.2 Capital cost

Table 1-6 contains a high-level summary of the capital cost of the facility. More detailed information on costs can be found in Chapter 16 and Appendix AC.

Table 1-6

Capital Cost Summary

Estimate Summary Sheet		
1	Stack connection/modification including Engineering, Procurement, Construction and all ducting within the operating plant property	$15,851,337
2	Flue gas conditioning including Engineering, Procurement, Construction from operating plant fence to absorber inlet flange	$52,418,588
3	CO_2 absorption including Engineering, Procurement, Construction from flange in flue gas conditioning and utility systems to flange toward solvent regeneration system	$79,589,477
4	Solvent regeneration including Engineering, Procurement, Construction	$40,740,128
5	CO_2 compressor and conditioning including Engineering, Procurement, Construction from flange solvent regeneration system and utility system to flange of the CO_2 pipeline to transport project	$43,349,473
6	General utility system including Engineering, Procurement, Construction	$51,319,711
7	Civil structural work including Engineering, Procurement, Construction	$46,915,097
8	Distribution control system (DCS), communication, main power supply, all distribution system and auxiliary system including Engineering, Procurement, Construction	$55,674,815
9	General (indirect) costs	$59,132,274
10-A	Contractor's costs	$444,990,899
10-B	Owner's cost	$5,009,101
	Direct cost	$450,000,000
10-C	Interest during construction, 1-1/2 years at 4%	$27,000,000
	Total Cost	**$477,000,000**

The capital cost of the PCC plant is depicted in Figure 1-4, showing the portion of the capital cost that each major process component represents. The somewhat higher portion for flue gas conveyance and conditioning is partially explained by the inclusion of flue gas blowers in this portion and not in the absorption portion.

In Figure 1-5, the capital cost is represented differently. The costs are divided by commodities and cost classes as is customary in the development of a cost estimate.

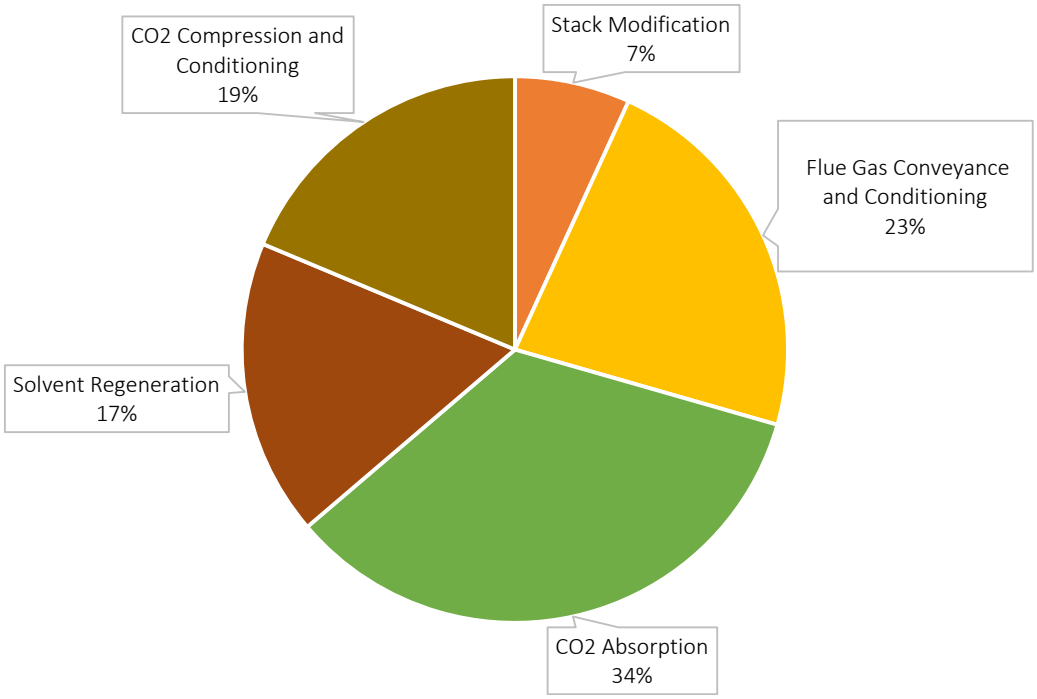

Note: Cost of utilities and indirects is included in each PCC area and is assumed proportional to the direct cost of the facilities shown in the figure.

Figure 1-4

Cost for PCC Areas as Percent of Contractor's Cost

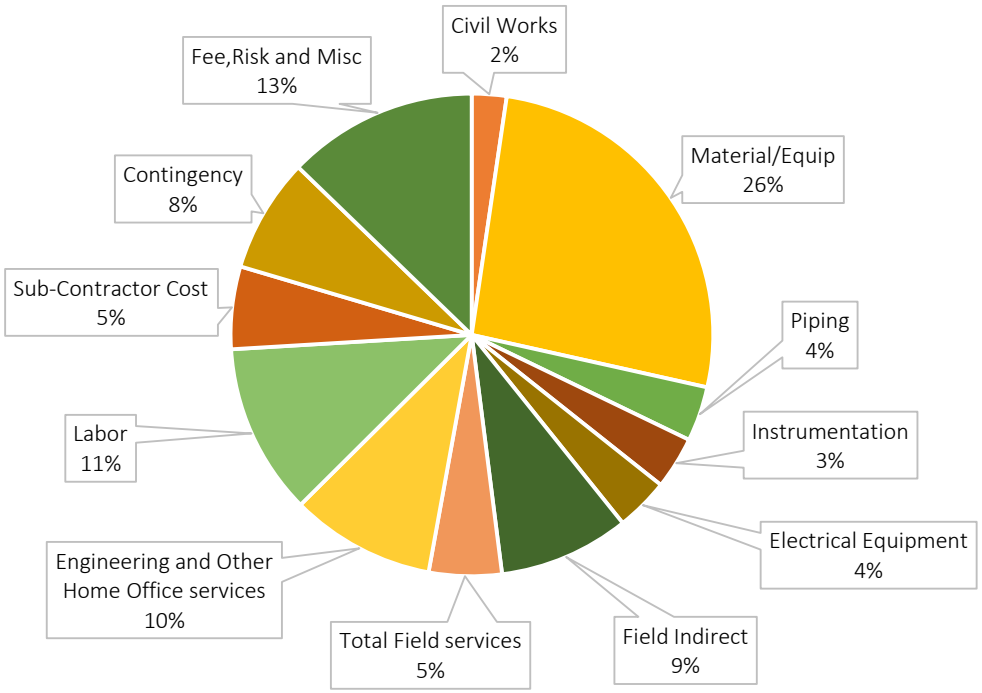

Figure 1-5

Costs as Percentage of Contractor's Cost

The assumptions upon which the capital cost is annualized are provided in Table 1-7. These assumptions have a major impact on the estimated cost per tonne of CO_2 captured. The values selected are considered typical for independent power projects and do not include any allowance for concessionary or subsidized financing sources.

Table 1-7

Annualized Capital Cost Assumptions

Debt-to-equity ratio	70/30
Duration of debt (put in place at commercial operation date)	15 Years
Interest rate on debt	6%
Return on equity	12%

$$Annualized\ Capitial\ Cost = \left(Debt\ amount \times CRF_{15\ yrs}^{6\%}\right) + \left(Equity\ amount \times CRF_{20\ yrs}^{12\%}\right)$$

$$\$477\ mil \times 0.7 = \$333.9\ mil\ Debt$$

$$\$477\ mil \times 0.3 = \$143.1\ mil\ Equity$$

$$\$333.9\ mil\ \times 0.103 = \$34.40\ mil$$

$$\$\ 143.1\ mil\ \times 0.134 = \$19.20\ mil$$

$$Total\ Annualized\ Capital\ Cost = \$53.60\ mil$$

The assumptions for development of the operating cost are included in Table 1-8. The hours of PCC plant operation are based on the historical data from the Panda Sherman power plant and projections of increased renewables penetration into the ERCOT independent system operator (ISO). The PCC plant is assumed to operate at full capacity during those hours because its design capacity is 60% that of the power plant, which is also near the minimum load for the power plant units.

The cost for energy used in the PCC plant is based on the average price of electricity sold to the grid by the power plant (excluding the few hours per year when electricity prices in the ERCOT system are allowed to reach up to $9,000 per MWh). The PCC plant would be shut off during those few hours every year to allow the power plant to fully benefit from this unique energy-only market phenomenon in ERCOT.

The amount of energy is based on the difference between electricity presently sold to the grid and the amount of CO_2 to be sold once the PCC plant is operational.

The cost of personnel is based on the costs at the Panda Sherman power plant. The cost of amine (MEA) is based on quotes received for delivery to the Sherman site (Appendix Y). Maintenance costs other than personnel are estimated to be 1% of the capital cost per year. Other chemicals and miscellaneous consumables are covered by a $1M per year allowance. The disposal of reclaimer bottoms is accounted for through a $500 per tonne hazardous waste disposal cost. This cost has been estimated at the high end of liquid hazardous waste haulage and disposal due to lack of actual waste characterization. Actual disposal cost would be expected to be lower when the residuals are fully analyzed and classified.

Table 1-8

Basis of Operating Cost

Operating Hours Per Year (assumed at full PCC capacity)	5,000 hrs
Level of Operation	420 MW equivalent
Average Value of Reduced Electricity Sales to ERCOT ($/MWh)	$25/MWh
Electricity Sales Reduction (MW)	67.3 MW
Average Total Wage per Person ($/yr)	$100,000/yr
MEA Cost ($/kg)	$1.14/kg
Annual Maintenance Allowance (1% of Contractor's Cost)	$4.5 mil
Owner Other Operations Allowance	$1.0 mil
Reclaimer Bottoms Disposal ($/tonne)	$500/tonne

The application of the assumptions, quotes, and allowance contained in Table 1-8 are extended, and the annual operation cost are developed in Table 1-9.

Table 1-9

Annual Operating Cost (excludes capital cost recovery)

Energy (Steam and Electricity)	$5000\ \frac{hrs}{yr} \times 67.3\ MW \times \frac{\$25}{MWh} = \$8.4\ \frac{mil}{yr}$
Personnel	$40\ people \times \frac{\$100{,}000}{person \times yr} = \$4.0\ \frac{mil}{yr}$
Solvent	$\frac{\$1.14}{yr} \times \frac{2\ kg}{tonne\ CO_2} \times \frac{645{,}000\ tonne}{yr} = \$1.5\ \frac{mil}{yr}$
Maintenance Allowance	$\$4.5\ \frac{mil}{yr}$
Other Consumables	$\$1.0\ \frac{mil}{yr}$

The annual operating costs in Table 1-9 are divided by the estimated amount of CO_2 to be captured in the PCC plant each year, and the results are presented in Table 1-10.

Table 1-10

Annual Operating Cost (costs per tonne CO2 captured at 5,000 hrs/yr—excludes capital cost recovery)

	$/Tonne
Energy	13.00
Maintenance	7.00
Personnel	6.20
Solvent	2.30
Admin Allowance	1.55
Waste Disposal	1.35
Annual Operating Cost	31.40

The $53.6M annualized capital cost divided by the same amount of CO_2 captured annually results in a cost of $83.10 per tonne. The total of the operating cost and the annualized capital cost together equal $114.50 per tonne of CO_2 captured. The impact of various levels of uncertainties associated with the various components of this cost are shown in Figure 1-6.

% Range	$/Tonne CO2 Captured	Base ($/Tonne CO2 Captured)
Cap Cost ± 15%	12.5 12.5	83.10
Maintenance ± 50%	3.5 3.5	7.00
Energy ±20%	2.6 2.6	13.00
Personnel ± 30%	1.9 1.9	6.20
Solvent ± 50%	1.2 1.2	2.30
Other Ops ± 50%	0.8 0.8	1.55
Waste Disposal ± 50%	0.7 0.7	1.35

Figure 1-6 Cost Sensitivities and Uncertainty Levels Tornado Diagram

1.3 Project Schedule

The schedule for implementation of a PCC plant at Sherman is presented in Table 1-11 and shown in Figure 1-7.

Table 1-11

Simplified Milestone Schedule[1]

Milestone	Week
Notice to Proceed – Financial Closure (NGCC)	0
Mobilization (PCC)	9
First Concrete (PCC)	12
1st Plant Outage (NGCC)	17
2nd Plant Outage (NGCC)	20
Backfeed Power Available (NGCC)	22
Energize #1 (PCC)	23
Steam Available (NGCC)	26
Mechanical Completion (PCC)	27
Target Completion (PCC)	28
Guarantee Completion (PCC)	30

1. Schedule shown is after pilot plant phase, which is expected to be ~2 years.

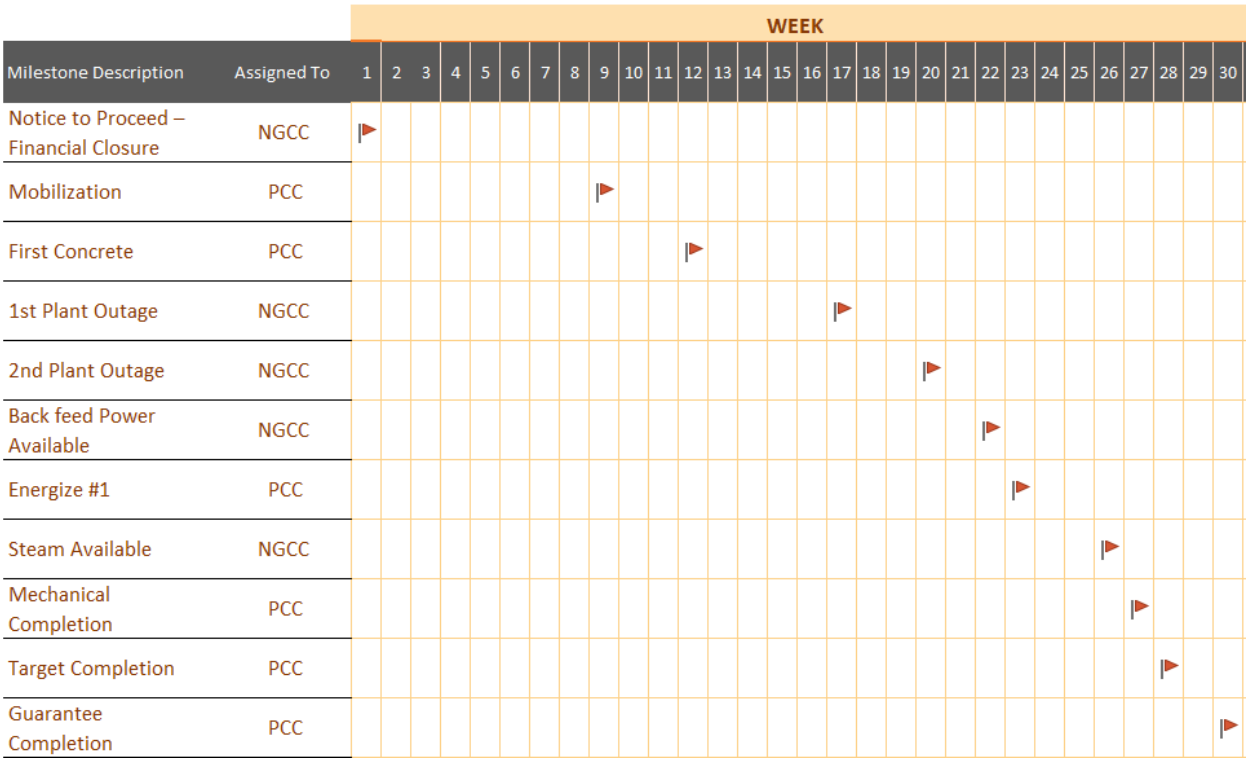

Figure 1-7

Simplified Milestone Schedule

1.4 Recommendations for Moving Forward from This FEED

Figure 1-8 is from the 1930 patent by R. R. Bottoms [1] upon which amine-based CO_2 capture from flue gas is based. The facility developed in this study—and almost any other absorbent-based solvent post-combustion carbon capture study—closely resembles the facility designed by Mr. Bottoms. The technology is sound; the economic sizing of equipment and operational cost trade-offs for its application to NGCC flue gas are, however, yet to be fully validated.

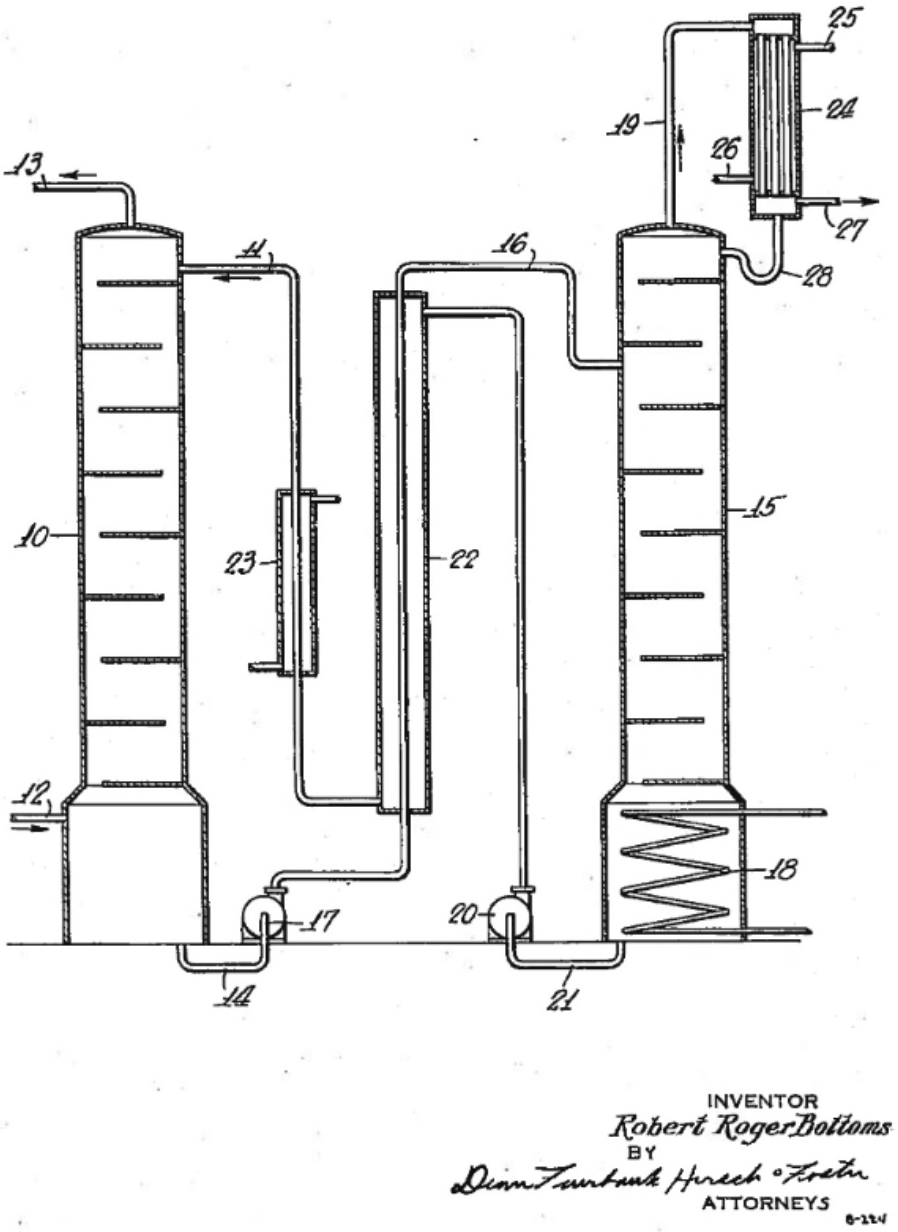

Figure 1-8

R. R. Bottoms Patent, 1930

An indication of the modeling uncertainty is shown in Tables 1-12, 1-13, and 1-14. Although the differences from the simulation models are worrisome, it is evident that a slight change in the lean loading value in the Aspen model will result in slightly higher removal and slightly lower energy requirements than the ProMax® model.

Table 1-12

Comparison of ProMax® and Aspen Simulation Results

Packing Height, m	Lean Loading, mol/mol	CO_2 Capture Rate, %	Rich Loading, mol/mol
ProMax ® Base Case: 5 stages/15 m	0.254	85.0	0.475
Aspen: 10 m	0.254	72.51	0.448
Aspen: 15 m	0.254	78.42	0.461
Aspen: 15 m	0.240	82.86	0.459
Aspen: 15 m	0.235	84.35	0.458
Aspen: 15 m	0.230	85.79	0.457
Aspen: 20 m	0.254	80.98	0.466
Aspen: 25 m	0.254	82.08	0.469
Aspen: 30 m	0.254	82.54	0.47
Aspen: 40 m	0.254	82.79	0.47
Aspen: 50 m	0.254	82.81	0.47

Table 1-13

CCSI[3] Capture Rate as a Function of Lean Loading

Height, m	Lean Loading, mol/mol	Capture Ratio, %	Rich Loading, mol/mol
15	0.24	82.86	0.459
15	0.235	84.35	0.458
15	0.23	85.79	0.457

[3] Carbon Capture Simulation Initiative (CCSI) provided open-source computational toolset for modeling carbon capture solutions.

Table 1-14

CCSI Reboiler Duty as a Function of Lean Loading

Rich Loading, mol/mol	Reboiler Duty, MW	Bottoms T, °C	Lean Loading, mol/mol
0.457	125.45	130.35	0.232
0.457	126.45	130.43	0.23
0.457	127	130.47	0.229
0.457	128	130.55	0.227
Promax®: 0.475	125.45	131	0.254

1.4.1 Modeling Uncertainties for Commercial Design Highlighted During FEED

Although there appears to be good correlation between ProMax® and Carbon Capture Simulation Initiative (CCSI) model predictions for overall design performance, when input parameters are slightly and appropriately adjusted, there are still uncertainties related to using these modeling software packages for commercial PCC plant design (see Tables 1-15 and 1-16):

- Neither model has 1) been compared to pilot data obtained using 35% w/w MEA and over a similar range of L/G ratios, packing heights, and so on and for natural gas power plant flue gases and 2) had internal correlations tuned if required to best match these conditions; the necessary pilot data do not appear to exist.
- These pilot data would also be able to indicate actual variation in performance under nominally constant process conditions; process modeling software gives misleadingly precise results (although stochastic modeling could be used to indicate possible practical performance variation).
- During normal operation, the solvent and plant will not be fresh. Solvents will attain an equilibrium composition as degradation and buildup of impurities are matched by reclaiming. Fouling and so on in service will degrade component performance (for example, heat exchangers, pumps, and fans). These effects can be assessed only based on realistic long-term testing (see Section 17.4).
- The power plants and PCC plant will not be operated under steady-state design conditions; not only will operational parameters differ from the design cases, but also in practice they may change rapidly enough for the plant never to achieve complete steady-state operation as these process models assume. Transient modeling can be employed to indicate possible effects but again requires verification by comparison with large, long-term pilot or full-scale data and a good understanding of the variable conditions that will actually be applied.

Table 1-15

CCSI/Aspen 10 Model (debugged)[4]; Various Semi-Lean Injection Levels with 10 m of Packing

		*Design Case						
Absorber packing height	m	15	10	10	10	10	10	10
CO_2 capture rate	%	85.0	85.21	85.33	85.3	85.18	85.09	85.2
Lean loading to absorber	molCO_2/molMEA	0.254	0.215	0.217	0.219	0.219	0.182	0.185
Rich loading out of absorber	molCO_2/molMEA	0.475	0.436	0.438	0.44	0.44	0.442	0.445
L/G ratio (includes semi-lean)	-	1.07	1.057	1.057	1.057	1.057	0.89	0.89
Reboiler heat input	MW	125.45	131.628	130.827	129.95	129.95	129.209	128.124
Specific heat consumption	GJ/tCO_2	3.65	3.67	3.64	3.62	3.62	3.63	3.57
Stripper bottom temperature	C	131.0	128.7	128.6	128.5	128.5	129.91	129.81
Stripper top temperature	C	109.3	111.3	111.1	110.9	111.0	110.72	110.49
Stripper bottom pressure	bar	2.6	2.4	2.4	2.4	2.4	2.4	2.4
Stripper top pressure	bar	2.27	2.27	2.27	2.27	2.27	2.7	2.27

[4] Section 17.2 of this report describes the anomalies recognized in CCSI results during the early stages of modeling.

Table 1-16

CCSI/Aspen 10 Model (debugged); various Semi-Lean Injection Levels with 15 m of Packing

		*Design Case		
Absorber packing height	M	15	15	15
CO_2 capture rate	%	85.0	85.15	85.05
Lean loading to absorber	molCO_2/molMEA	0.254	0.242	0.244
Rich loading out of absorber	molCO_2/molMEA	0.475	0.458	0.459
L/G ratio (includes semi-lean)	-	1.07	1.062	1.062
Reboiler heat input	MW	125.45	121.22	120.33
Specific heat consumption	GJ/tCO_2	3.65	3.38	3.36
Stripper bottom temperature	C	131.0	127.53	127.43
Stripper top temperature	C	109.3	109.17	109.06
Stripper bottom pressure	Bar	2.6	2.4	2.4
Stripper top pressure	Bar	2.27	2.27	2.27

1.4.2 Hands-On Approach to Future Development: Pilot

In practice, however, it must be accepted that there will always be limits to what modeling can achieve for plant design and that uncertainties will need to be addressed first by realistic piloting, if possible, and then by adding design margins (which can be reduced by further testing). The final tuning and assessment of plant performance then must take place in service, over several years of operation. However, modeling—even if not 100% accurate—will still be extremely useful to guide plant engineers during this in-service improvement stage.

A **pilot testing program** is therefore proposed to resolve most of the design uncertainties highlighted and discussed in Sections 17.1 and 17.3 of this report and to confirm design assumptions and operating conditions for the PCC unit. The pilot plant proposed will generally replicate all process elements of the full-scale PCC unit, except that it will not include a CO_2 product compression section. From a process operations standpoint, the CO_2 compression section is virtually independent from the carbon capture process and is considered sufficiently demonstrated at commercial scale to preclude the need for pilot demonstration. A simplified process flow diagram for the recommended Sherman pilot plant is shown in Figure 1-9.

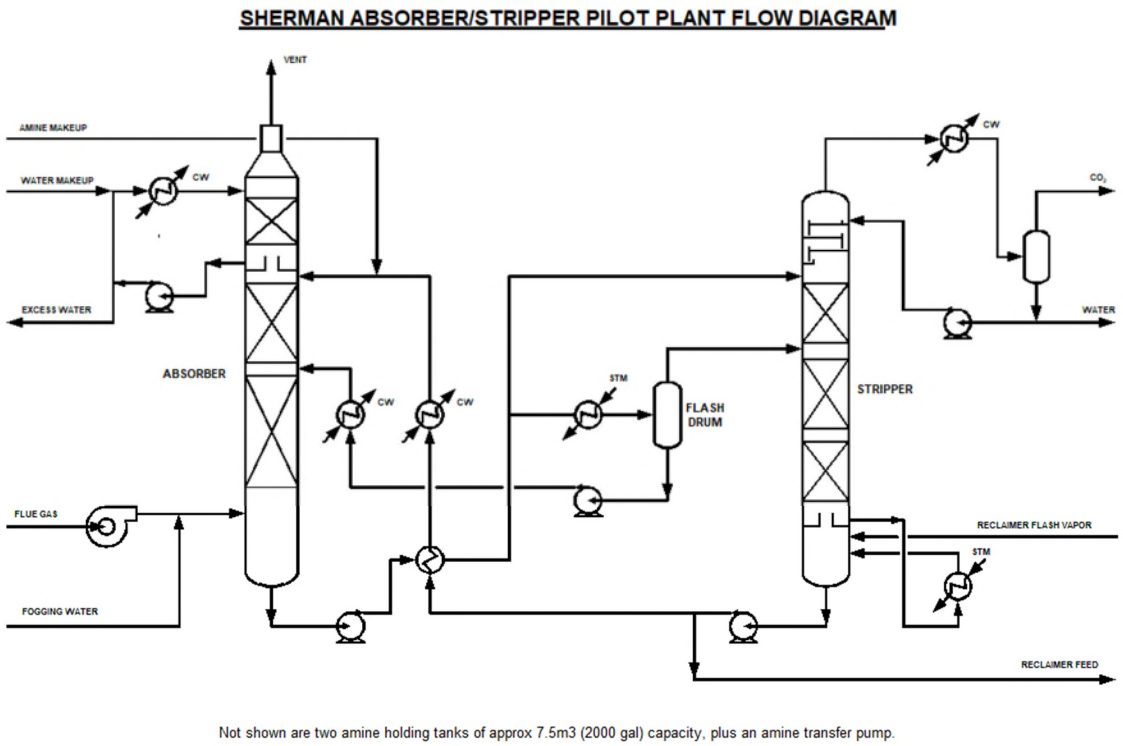

Figure 1-9

Process Flow Diagram for Pilot Plant

The proposed pilot plant scope includes the following:

- Flue gas blower with cooling by single-stage water injection fogging
- One absorber column, including water wash section
- Stripper with thermosiphon reboiler, condenser, and reflux drum
- Semi-lean amine flash system
- Rich/lean amine heat exchange
- Associated pumps, coolers, controls and sampling capability, and emission testing
- Reclaimer system

The pilot plant will operate solely on flue gas from the Sherman power plant. Because the Sherman plant is a non-base loaded power plant that has typically run at a 60–65% capacity factor, frequent shutdowns of up to 48 hours are expected. The pilot plant will therefore experience frequent loss of flue gas feed, necessitating frequent planned shutdowns and restarts. Operating the pilot plant on a non-baseload basis is important because frequent shutdowns and restarts can impact PCC solvent quality and overall system performance. The power plant will provide steam and cooling water as needed to operate the pilot plant.

Pilot Test Objectives

Following are the primary pilot plant test objectives:

1. Confirm the base case mass and energy balances for the PCC unit at design flue gas feed rates, including CO_2 recovery, lean and rich amine loadings, lean and rich amine circulation rates, stripper reboil and reflux rates, and overall system water balance at a base case absorber packing height of 15 m. Some simulation studies have indicated that it may be desirable to reduce the lean amine CO_2 loading (increase reboil rate) and/or to increase the lean amine flow rate to obtain desired CO_2 recovery. [2] These options can be tested during a long-term pilot program. Because simulation studies have also indicated that base case absorber performance may require more or less than 15 m of packing, the pilot absorber will be designed to allow testing with an absorber section packing height of 10, 15, or 20 m.

2. Confirm generation rates and compositions for HSS and for thermal degradation products in the MEA solvent during long-term PCC operations, including whether degradation is generally linear with operating time. In addition, confirm that a continuous thermal reclaimer can maintain suitable amine quality during a long-term (12-month) run, and confirm long-term amine consumption rates. To produce credible degradation rates during pilot testing, liquid holdup times in the absorber, stripper, flash drum, and reclaimer vessels will be controlled to match the normal holdup times in the full-scale plant. Limited testing at reduced liquid holdup times can also be performed to determine the impact on both amine degradation rates and ammonia emissions.
3. Confirm emissions levels of MEA, ammonia, and precursors of nitrosamines in the absorber vent gas during long-term operations.
4. Determine equipment corrosion rates; confirm materials selection for the full-scale PCC unit. Demonstrate the ability to handle frequent shutdowns and restarts of the PCC unit while maintaining solvent quality, controlling emissions, and maintaining equipment performance.

In addition to these four primary objectives, several less-critical test objectives could be investigated during long-term pilot testing. Some of these added tests may require modifications to pilot test equipment.

1. Confirm stripper operation at reduced packing heights. Because simulation studies have indicated that base case stripper performance may not require the full 20 m of packing specified for the stripper, we may test the stripper with reduced packing height of, say, only 12 or 15 m. This is somewhat tempered by the Aspen 10-CCSI simulation run, showing 0.232 lean loading at the current steam flow to the reboil system.
2. Check PCC unit operation without the semi-lean amine system. This test, which should require no new pilot test equipment, would confirm the efficacy of the semi-lean system and whether the minimal capital investment associated with this system is justified.
3. Check amine degradation rates when operating the stripper at lower pressure, which will lower stripper bottoms temperature. Operation of the stripper at reboiler pressures down to 2.0 bara (vs. 2.6 bara design) should be possible without changes in equipment size.

Pilot Plant Equipment Size

The pilot plant size has been tentatively selected based on an absorber column diameter of 1 m, which will ensure that test results can be credibly scaled up by column packing vendors to the full-size PCC unit. It results in a stripper column of 0.4 m in diameter, which is considered by some packing vendors as the minimum diameter for meaningful test data. This results in a scale-up factor from pilot plant to full-scale plant of 1:278.5, based on prorating the cross-sectional area of the full-scale absorber columns to the single pilot absorber at 1 m diameter: scaling ratio = $(11.8^2 + 11.8^2)/(1.0^2) = 278.5$. Based on applying this scale-up ratio to the Sherman PCC base case design, major equipment sizes and flow rates for the pilot plant are as follows:

- Absorber ID = 1.0 m = 40 in.
- Stripper ID = 0.4 m = 16 in.
- Semi-lean flash drum ID = 0.3 m = 12 in.
- Hot flue gas from power plant = 9100 kg/hr
- Fogging water = 125 kg/hr
- Lean amine to absorber = 7968 kg/hr or 7.64 m^3/hr or 34 gpm
- Rich amine from absorber = 10,159 kg/hr or 8.76 m^3/hr or 39 gpm
- Rich amine to semi-lean flash = 20% or 2030 kg/hr or 1.75 m^3/hr or 8 gpm
- Stripper reflux = 29.1 kg/hr
- 3.13 bara steam to stripper reboiler = 747 kg/hr

The tangent-tangent height of the pilot plant absorber vessel, including space for three absorption beds totaling 20 m of absorption packing, will be about 36 m compared to the full-scale vessels at 44.3 m—reflecting the reduced space needed for packing supports, inlet ducting, and disengaging space with a 1 m diameter vessel. For similar reasons, the pilot plant stripper vessel will be about 40 m high compared to the full-size stripper at 43.6 m. It is planned to oversize the pilot plant pumps, blower, and heat exchangers by at least 25% to ensure flexibility to test off-normal operations. The pilot plant will also have lean and rich amine storage tanks of about 7.5 m^3 capacity each, an amine sump and containment system, and a small on-site laboratory area solvent and gas analyses and a small maintenance shop. Final scoping, layout, equipment design, and operational results of the

Sherman pilot plant will be confirmed prior to start of the detailed design stage of the project.

Pilot Test Duration

Initial confirmation of CO_2 recovery and heat and mass balances for the PCC unit should be possible with a 30–60 day pilot test program. However, credible confirmation of amine degradation rates, reclaiming effectiveness, emissions rates, and system corrosion should be based on at least a 12-month run. Because we expect that several test campaigns will be planned to evaluate the effect of lean amine loading and lean amine circulation rates—plus possibly some runs at reduced or increased packing heights—we expect that the overall pilot test program should be planned for an 18–24 month schedule.

Pilot Reclaimer System

The base case reclaimer for the full-scale PCC unit is a continuous, two-stage, dual-pressure, thermal reclaimer system, designed to recover 90+% of the MEA contained in reclaimer feed. This base case system is complex but energy efficient, consisting of three flash/knockout drums, three pumps, two reboilers, and a condenser. For the pilot plant, we propose a simpler, single-stage continuous thermal reclaimer system, consisting of only a single flash drum with recirculation pump and reboiler. This single-stage pilot reclaimer will also recover 90+% MEA but uses more steam and injects more stripping water per unit of solvent treated. The single-stage pilot reclaimer feed is lean amine (stripper bottoms) plus caustic solution plus 150 wt% injection water, whereas the full-scale two-stage reclaimer uses only 30 wt% injection water. The mixed feed stream to the single-stage reclaimer is flashed at 150°C and stripper pressure, venting all flash gas back to the stripper—just as the first stage of the full-scale reclaimer. Residence time at temperature for feed and residue in the single-stage pilot reclaimer will be adjusted to match the overall time/temperature conditions of the full-scale base case reclaimer. This alternative pilot plant reclaimer design should provide credible data on amine recovery and degradation rates, compared to the base case reclaimer design, without the complexity of the two-stage, dual-pressure system. During detailed design of the full-scale Sherman PCC unit, we plan to further consider the use of a single-stage reclaimer system.

Expected equipment sizes and flow rates for the single-stage pilot reclaimer are listed next. The pilot reclaimer system could be readily designed as a single equipment skid.

- Flash drum = 0.25 m ID x 1.5 m tan/tan = 10 in. x 5 ft 0 in.
- Recirculating pump = 750 kg/hr = 0.7 m^3/hr = 3 gpm
- Reboiler = 1.6 m^2 surface area (probably two 20 ft double-pipe hairpins)
- Lean amine feed rate = 9.3 kg/hr
- Water injection to feed = 14.0 kg/hr
- 50% caustic injection to feed = 120 g/hr
- Total reclaimer feed = 23.4 kg/hr
- Flash vapor returned to stripper = 22.4 kg/hr
- Quenched residue produced to waste = 1.5 kg/hr
- 7.0 bara steam to reboiler = 29 kg/hr

1.4.3 Managing the Risk

Since the process and the chemicals used in the process have been in use for over 80 years, why would pilot testing be needed? What is so unique in the application of generic MEA to the flue gas from the Sherman combined cycle power plant for CO_2 capture?

If the economics of the addition of carbon capture are robust, the uncertainties could be absorbed in large capital cost contingency pools and reserve funds for de-bottlenecking and revising the design after initial operation. Increased operating costs represent another risk but of a lower magnitude than physical plant risks. The non-economic risk of air emissions from operation of the capture system prompting regulators to stop system operation is probably small but of such consequence it cannot be ignored.

Because the cost of carbon capture from dilute sources such as flue gas from combined-cycle power plants is high and revenue through investment tax credits (ITC) such as 45Q—and enhanced oil recovery—is limited, economics of the application of carbon capture at the Sherman plant will be challenging. Prior to any financial investment decision, the answers to the questions of minimum capital investment possible to capture the design amount of CO_2 must be answered with a level of certainty that can be provided only by extended pilot plant operation, data collection, and resulting design optimization.

Chapter 2: Background, Design Basis, and Project Approach

2.1 Project Description

2.1.1 Project Overview

This front-end engineering design (FEED) study is for retrofit of a post-combustion capture (PCC) plant to an existing natural gas–combined cycle (NGCC) power plant. The study is based on a Bechtel-led FEED study conducted in 2008, for a retrofit of carbon capture to a 420MW natural gas combined cycle plant in Karsto, Norway. [3] Power plant owner Panda Power allowed its Sherman power plant, a 2x2x1 duct-fired 758 MWe facility with F class gas turbines, for use for this study. This fully operational power plant is located in Sherman, Texas.

The scope of the FEED study is the engineering required for the design, construction, and operation of the carbon capture and compression unit to be retrofitted onto the existing Sherman power plant, including modifications to the existing facility necessary to perform the retrofit. The offtake of the CO_2, transportation and storage are not part of this study, but the local geology and market for CO_2 were factors in identifying this plant as a target for carbon capture.

The post-combustion capture process encompasses a conventional absorber-stripper configuration using an amine-based solvent to capture CO_2 from the power plant's flue gas. Like all amine-type CO_2 capture from flue gas facilities, the Sherman PCC facility is based on the process developed and patented by R. R. Bottoms in 1930 [1] (see Figure 2-1).

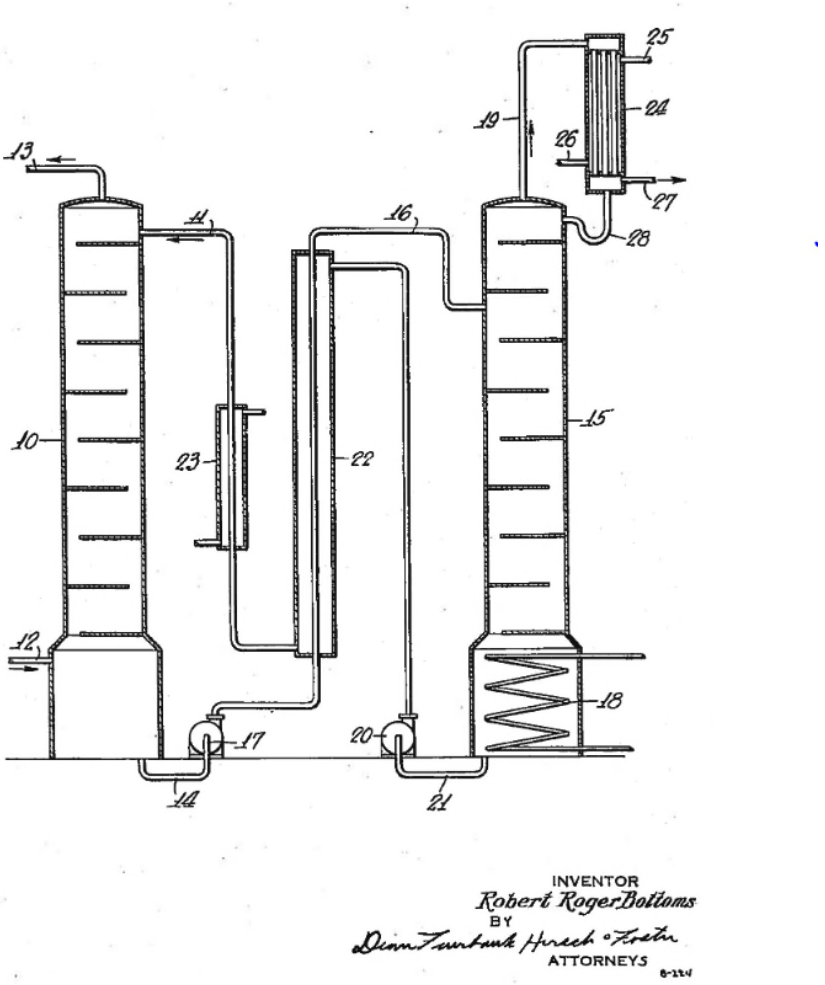

Figure 2-1

R. R. Bottoms Process, 1930 (full patent in Appendix AA)

In this process, flue gas is contacted with an amine solvent in the absorber. The amine solvent reacts with the CO_2 from the flue gas stream to remove the CO_2 from the outgoing flue gas stream and create a solvent stream rich in CO_2. The CO_2 contained in the solvent is then heated and stripped from the amine solution and compressed to dense phase for transport. Typical destinations for CO_2 product streams include storage in saline aquifers, enhanced oil recovery, or utilization in relevant industries.

This FEED study benefited from efforts of the Department of Energy (DOE) to heighten the ability and awareness of carbon capture and storage (CCS) potential across the United States and other portions of North America through its Carbon Storage Atlas. [4] Figure 2-2, taken from the NATCARB Viewer 2.0, shows the saline aquifers and sedimentary basins that surround the Sherman site—with potential for CO_2 storage in addition to any enhanced oil recovery (EOR) opportunities nearby. Figure 2-3 shows the oil and gas wells in Grayson County. The proximity/availability of these carbon storage alternatives, combined with Bechtel's detailed knowledge of the Sherman power plant design and Panda Power's willingness to collaborate, accounted for the initial selection of this location for the FEED study.

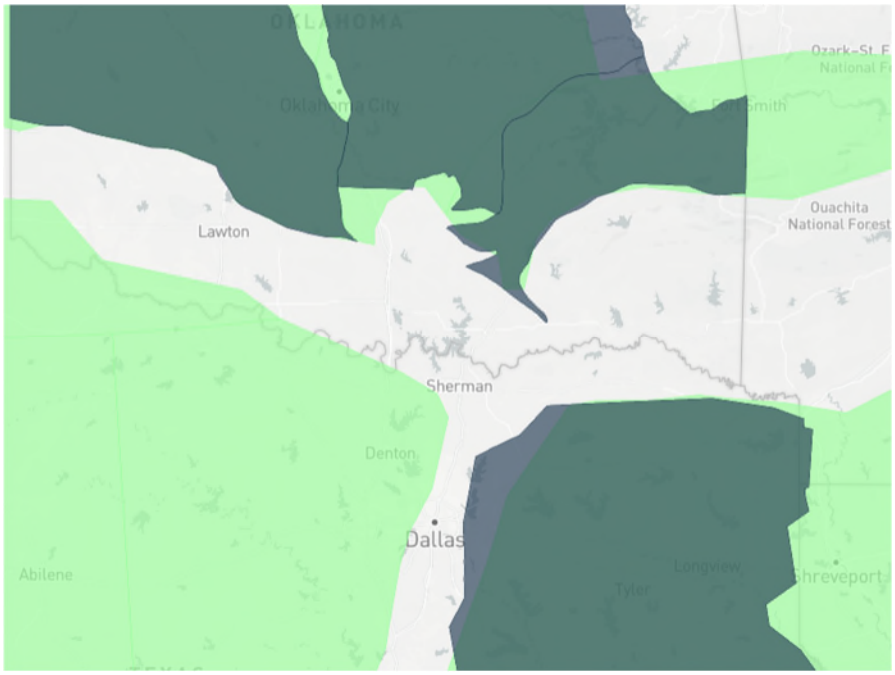

Figure 2-2

Proximity of Saline Aquifers (dark green) and Sedimentary Basins (light green) to Sherman, Texas

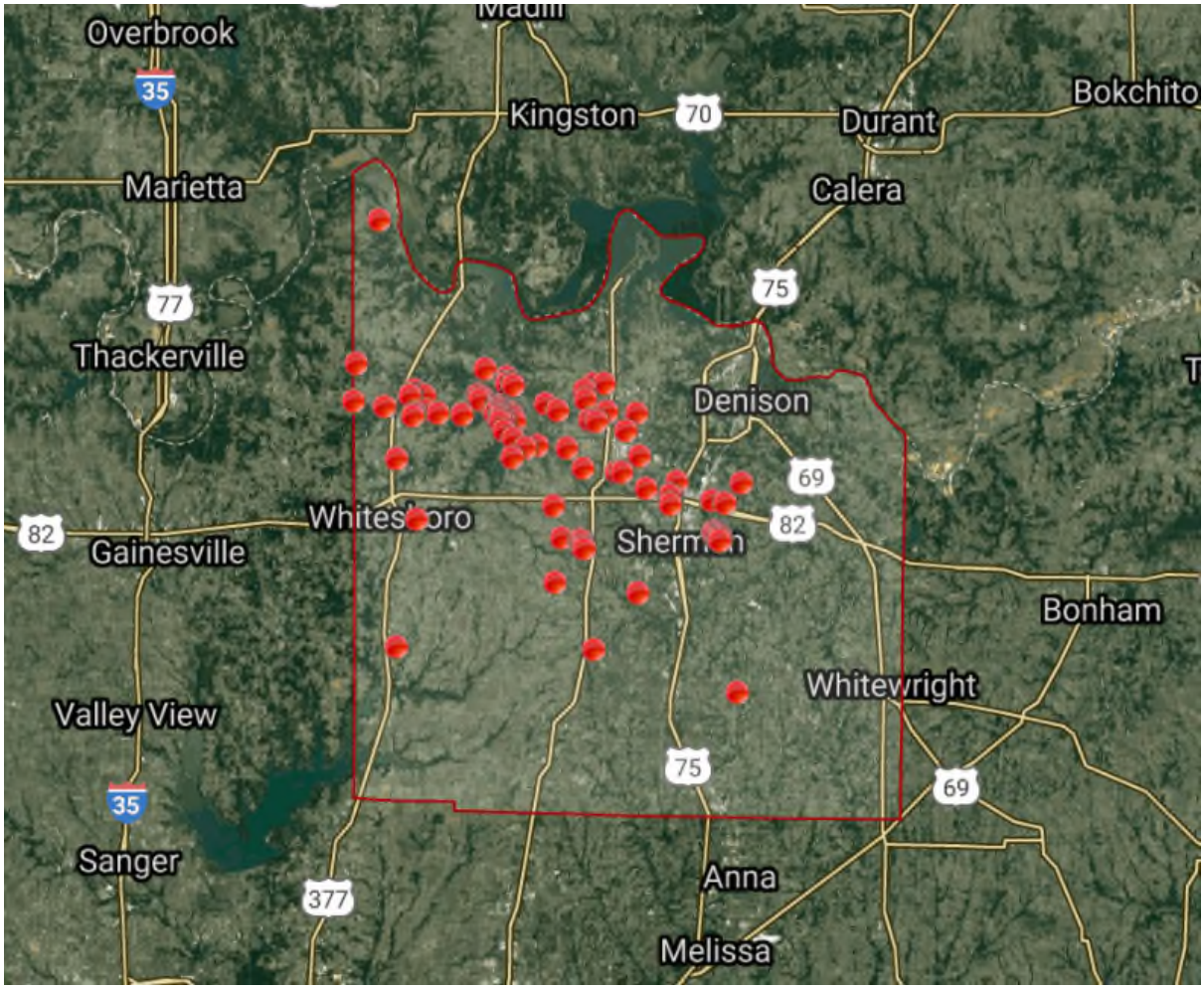

http://www.texas-drilling.com/grayson-county

Figure 2-3

Existing Oil and Gas Wells in Grayson County, Texas

2.1.2 Project Objectives

The project purpose is to create the FEED documents required for construction and operation of a carbon capture facility that captures approximately 85% of the CO_2 (128.9 tonnes per hour) from an NGCC power plant. To provide the greatest transparency and utility from these results, an open-access philosophy was adhered to; all aspects of the capture unit design are non-proprietary.

Toward this aim, the following objectives were included in the project:

1. Use a low-cost generic solvent (monoethanolamine [MEA]).
2. Develop process and mechanical design data and details for public review.
3. Produce cost estimates and material quantities.
4. Provide implementation schedule and operation economics.

2.1.3 Site Selection

Initial site selection was based on Bechtel's strong familiarity with the Sherman power plant, the owner's support, and plot space availability. The Sherman power plant site contains a large unused area adjacent to the natural gas–combined cycle (NGCC) plant that was at one time reserved for a second identical power plant. The ERCOT market conditions have changed over recent years, however, so construction of a second NGCC plant at this site is no longer viewed as viable.

Other major considerations included the vicinity of the Sherman power plant with oil fields likely to benefit from CO_2 enhanced oil recovery and with saline basins available for CO_2 sequestration. For more on the site conditions and design criteria of the Sherman NGCC plant, see Section 2.2, Design Basis, next.

2.2 Design Basis

2.2.1 Power Plant Design Criteria

This FEED study is based on retrofitting the PCC plant at Panda's Sherman NGCC plant in Sherman, Texas.

The power plant has a 2x2x1 configuration and includes the following:

- Two natural gas–fired Siemen's SGT6-5000F combustion turbines with a dry-low NOx (DLN) combustion system.
- Two horizontal design, triple-pressure (HP, IP, LP), reheat-type heat recovery steam generators (HRSGs). The high-pressure section is a somewhat unique once-through system that enables rapid start of the power plant. The intermediate- and low-pressure sections are natural circulation sections. Each HRSG has natural gas–fired duct burners to increase steam turbine output. A selective catalytic reduction (SCR) system is provided to reduce NOx from the combustion turbine exhaust gas.
- One Siemen's model SST6-5000 HI50, a condensing reheat steam turbine with a combined HP/IP section and a separate double-flow, down-exhaust, LP section.
- A 12-cell, mechanical induced draft, counterflow, fiberglass cooling tower. The circulating water system operates at eight cycles of concentration (COC).
- A raw water treatment system for treating the influent (raw) water from Lake Texoma. The treatment system includes two 50% clarifiers and two 50% gravity filters. The Sherman NGCC plant is a zero waste discharge facility; the plant cooling tower blowdown and other wastewater is collected and treated in a zero liquid discharge (ZLD) system.
- A 138 kV plant switchyard consisting of a ring-bus design.

2.2.2 Site Conditions

The criteria used in the design of the Sherman power plant are shown in Table 2-1.

Table 2-1

Key Sherman Plant Design Criteria

Location	Grayson County, near Sherman, Texas
Site elevation (nominal)	213.4 m (700 ft) above sea level
Atmospheric pressure	0.988 bara (14.328 psia)
Dry bulb temperature	35°C (95°F); for power plant guarantee
Relative humidity	43%; for power plant guarantee
Extreme temperatures for equipment protection and operation	▪ Maximum: 43.3°C (110°F) ▪ Minimum: -9.4°C (15°F)
Average annual precipitation	889 mm (35 in.)
Snow load	According to IBC 2009/ASCE 7 2005, ground snow load 0.24 KPa (5 psf) for the power plant; snow exposure factor Ce = 1.0.
Roof live load	0.958 KPa (20 psf) according to ASCE
Frost penetration	15.2 cm (6 in.)
Wind speed and loads	40 m/sec (90 mph); International Building Code (IBC) 2009/ASCE 7, 2005
Seismic design	Category B, Ss = 0.0169 g and S1 = 0.060 g; site class D, IBC 2009/ASCE 7

2.2.3 NGCC Plant Technical Data

The Sherman NGCC plant was commissioned in 2014. Power plant data at guarantee conditions (35°C ambient temperature, 43% relative humidity (RH), and 0.988 bara) with gas turbines operating at full load with evaporative coolers on and no low pressure (LP) steam extraction for the carbon capture plant are shown in Table 2-2.

Table 2-2

Power Plant Data

	Units	Case 1: 2x2x1 OperationDuct Burners On	Case 2: 2x2x1 Operation Duct Burners Off
Gas turbine output (gross)	MW	205, each	196.4, each
Steam turbine output (gross)	MW	330.6	221.4
Net plant output	MW	719.2	594.1
Net plant heat rate, LHV	kJ/kwh (Btu/kwh)	6721 (6370)	6510 (6170)
HP turbine inlet flow	kg/hr (lb/hr)	709,177 (1,563,467)	449,673 (991,360)
HP turbine inlet pressure	bara (psia)	152.58 (2213.0)	97.28 (1410.9)
HP turbine inlet temperature	°C (°F)	564.8 (1048.7)	541.6 (1006.8)
IP turbine inlet flow	kg/hr (lb/hr)	775,456 (1,709,588)	529,773 (1,167,949)
IP turbine inlet pressure	bara (psia)	34.43 (499.4)	23.51(341.0)
IP turbine inlet temperature	°C (°F)	554.2 (1029.6)	547.8 (1018.0)
LP turbine inlet flow	kg/hr (lb/hr)	835,918 (1,842,884)	601,732 (1,326,592)
LP turbine inlet pressure	bara (psia)	5.41 (78.5)	3.90 (56.6)
LP turbine inlet temperature	°C (°F)	290.7 (555.3)	291.2 (556.1)
Flue gas flow	kg/hr (lb/hr)	3,964,553 (8,740,344)	3,700,080 (8,157,280)
Stack temperature	°C (°F)	84.6 (184.3)	92.2 (198)

Of the two cases shown above, the unfired case (Case 2: Duct Burners off) has the lower LP steam flow per unit of flue gas. If the power plant operating load is reduced while maintaining constant the amount of flue gas diverted to PCC, the limit at which there is insufficient LP steam for PCC while meeting minimum the LP steam flow requirement through the LP turbine is reached faster for the unfired case. If the percentage of flue gas diverted to the PCC compared to the total flue gas is kept constant as the firing rate is reduced, the unfired case is still the limiting case for the PCC retrofit. This is because the ratio of the decrease in steam flow to the decrease in flue gas flow is greater for the unfired condition.

The flue gas temperature at the stack is lower in the fired case because the feedwater flow in the economizer section of the HRSG is greater in the fired case than the unfired case; therefore, more heat is removed from the flue gas as it passes through the economizer section before exiting the HRSG.

2.2.4 Natural Gas Composition

Natural gas composition used for the design of the Sherman power plant is provided in Table 2-3.

Table 2-3

Natural Gas Composition

Constituents	Volume, %
Methane (CH_4)	96.03
Nitrogen (N_2)	0.654
Carbon-dioxide (CO_2)	0.913
Ethane (C_2H_6)	2.202
Propane (C_3H_8)	0.151
nButane (nC_4H_{10})	0.019
IsoButane (iC_4H_{10})	0.018
Pentane (nC_5H_{12})	0.008
Hexane (C_6H_{12})	0.006
Hydrogen Sulfide (H_2S)	0.004

2.2.5 Emission Requirements

The guaranteed emission limits for the Sherman power plant are provided in Table 2-4. Case 1 is plant operation with duct burners on; Case 2 is with duct burners off.

Table 2-4

Emission Limits

	Case 1	Case 2
NOx ppmvd @15% O_2 (24-hr rolling avg.)	2	2
NH_3 ppmvd @ 15% O_2 (3-hr rolling avg.)	10	10
CO, ppmvd @ 15% O_2 (3-hr rolling avg.)	15	10
VOC, ppmvd @ 15% O_2 (3-hr rolling avg.)	4	1
Particulate matter, lbm/hr	15	10

2.2.6 Noise Requirements

Noise emission from steady-state normal operation of the power plant must meet an A-weighted sound pressure limit of 75 dBA, Leq, 1 hour at the site boundary.

2.2.7 Circulating Water Quality

Quality of the circulating water at eight COC is provided in Table 2-5. Circulating water is the cooling water source for the PCC plant.

Table 2-5

Circulating Water Quality

Circulating Water Quality (8 Cycles of Concentration)		
Calcium	672	mg/l as Ca
Magnesium	248	mg/l as Mg
Total hardness	2712	mg/l as $CaCO_3$
Sodium	1512	mg/l as Na
Potassium	48	mg/l as K
Iron, dissolved	0.16	mg/l as Fe
Iron, total	0.16	mg/l as Fe
Manganese, dissolved	0.1	mg/l as Mn
Manganese, total	0.1	mg/l as Mn
Barium	1.04	mg/l as Ba
Strontium	8.2	mg/l as Sr
Sulfates	2421	mg/l as SO_4
Chlorides	2216	mg/l as Cl
Fluorides	2.2	mg/l as F
Nitrates	< 5	mg/l as NO_3
Nitrites	< 0.1	mg/l as NO_2
Phosphorus	0.5	mg/l as P
P Alkalinity	< 5	mg/l as $CaCO_3$
M Alkalinity	172	mg/l as $CaCO_3$
Silica, dissolved	25	mg/l as SiO_2
Silica, total	25	mg/l as SiO_2
pH	7.5 to 8.0	(standard units)
Conductivity	13040	µS/cm at 25°C
Total dissolved solids (TDS)	8350	mg/l
Total suspended solids (TSS)	50	mg/l

Circulating Water Quality (8 Cycles of Concentration)		
Aluminum	0.3	mg/l as Al
Arsenic	< 8	µg/l as As
Cadmium	< 0.5	µg/l as Cd
Chromium	< 0.5	µg/l as Cr
Cobalt	< 0.5	µg/l as Co
Copper	0.3	mg/l as Cu
Lead	< 0.5	µg/l as Pb
Mercury	< 2.0	µg/l as Hg
Selenium	< 2.0	µg/l as Se
Vanadium	< 2.0	µg/l as V
Zinc	< 0.1	mg/l as Zn
Ammonia	< 1.0	mg/l as NH_3

2.2.8 Flue Gas to PCC

Sizing of the PCC plant is based on treating an amount of flue gas equivalent to 420 MW, approximately 68% of the total flue gas emitted by the NGCC power plant operating at guarantee condition with duct burners off (Case 2 in Table 2-2). A reduced power plant capacity factor was used for sizing the PCC plant because the gas turbines at the site often operate at reduced load due to the high penetration of renewable power in the ERCOT region, as described in Chapter 16. The cost of capture is primarily driven by capital cost (and therefore is highly sensitive to capacity factor). Sizing the capture unit so that when used it is nearly always operating at full capacity is critical to the economic viability of the proposed investment.

The other ERCOT-driven design consideration is that ERCOT is generally an energy-only market—that is, no payments are provided to generators for their provision of energy capacity. To address the issues this creates, ERCOT allows prices for energy to rise to very high levels (the cap is currently $9000/MWh). Generators rely on selling electricity during those few hours per year when energy prices are at their highest. Therefore, for Sherman, the operating strategy would be to shut off the PCC plant when prices are high and sell the additional MWh available that would have otherwise been lost because of PCC operation. This is estimated to be ~10 days per year concentrated during summer months based on data from 2018–2020 and the projected additions of solar photovoltaics (PV) in ERCOT.

Flue gas flow rate, temperature, and composition for the PCC design case, which corresponds to the power plant operating at guarantee conditions with duct burners off, is provided in Table 2-6. Some variations will occur based on power plant operating load and ambient conditions, but these are considered minor and do not generally impact the performance of the PCC plant.

Table 2-6

Flue Gas Conditions

Parameter	Normal
Mass flow (design case) (kg/s) diverted to PCC	704
Temperature (°C)	92.2
Composition (mass fraction, %)	
Oxygen	14.1
Nitrogen	73.9
Argon	1.2
Water	4.8
CO_2	6.0
NO	0.00019
NO_2	3.2E-05
NH_3	0.0004
SO_2	6.7E-05

2.2.9 Carbon Capture and Compression Plant Design Criteria

General

The PCC plant will be located adjacent to the NGCC plant in the northwest section of the 209-acre site as shown in Plot Plan Drawing 26301-000-P1-010-00001 in Appendix E. A site aerial image indicating PCC plant location is shown in Figure 2-4. Power plant design conditions defined in Section 2.2.2 were also used for the PCC design. During the detailed design stage, the latest codes and standards available will be used.



Figure 2-4

Aerial Image of Sherman Power Plant Site (from Google Maps) Indicating PCC Location and Fabrication Yard Areas

CO_2 is captured through an amine absorption process in absorber vessels; the amine solution used is low-cost generic MEA at 35% (wt) concentration (MEA plus dilution water). No solvent additives are expected to be required.

Absorbers and Stripper

The target CO_2 removal efficiency in the absorbers is 85%. The diameter of the absorber vessels (two at 50%) is sized based on a system factor of 0.85 for the amine section and 1.0 for the wash section. The system factor is used to derate capacity ratings. This capacity derating factor was applied to account for capacity loss due to potential foaming of amine. The system factor used provides some margin because a factor up to 0.9 could be used with packing. Additional design margin was provided by considering a maximum flooding factor of 80%. The final column diameter was then selected based on input from the vendors to allow a range of vendor packings to be installed.

Stripper vessel diameter is sized based on a system factor of 0.85 for amine and a flooding factor of 80%. Stripper reboilers were sized based on LP steam from the power plant at 3.13 bara (45.4 psia) and 135°C (275°F).

Cylindrical absorption and stripping vessels were selected for Sherman because their fluid flow patterns are well documented and understood compared with those of other geometric configurations. A single absorber vessel was not selected based on limited data from structural

packing/internals suppliers confirming efficient operation of a vessel >15 m in diameter.

Reclaimer

Reclaimer design is based on two-stage, dual-pressure continuous operation as described in Section 3.1.8. Thermal and oxidative degradation rates for solvent were estimated based on the results of a pilot test program at Mongstad in Norway [5] [6] after adjustment for variables such as stripper operating temperatures. Steam to the reclaimer flash exchangers is provided from the auxiliary boiler at the natural-gas combined cycle plant. When the reclaimer is in operation, approximately 2.2 tonnes/hr of saturated steam is required at 7 bara.

Compressors and Dryer

Compressors, pumps, and dryer are sized to provide the CO_2 product in dense phase at 150 bara and 38.6°C maximum, with moisture content less than 50 ppmw.

CO_2 Product Specifications

The design criteria for the CO_2 product being discharged from the PCC plant are provided in Table 2-7. The specification selected is consistent with the product that can be produced with only moisture removal during compression and minimize pipeline deterioration. If the wells finally selected as the end point of a future pipeline require a different specification, the additional treatment would then be added.

Table 2-7

CO_2 Product Specifications

Composition	Specification
Carbon dioxide (mol%)	>99.6
Nitrogen (wt%)	<0.04
Water (ppmw)	<50
Hydrogen sulfide (ppmw)	<100
Oxygen (ppmw)	<200
Ammonia	Trace
Amine	Trace

Cooling Water

The PCC plant is designed based on cooling water supply (circulating water) from the NGCC plant at 28.6°C during summer. The NGCC plant cooling tower is adequately sized to provide cooling water to the PCC plant at this temperature with the power plant design inlet wet bulb temperature of 25.56°C.

Noise

Flue gas blowers and compressors are located within buildings to limit the noise at the site boundary to its current permit limit. All other equipment will be specified to meet 85 dBA at 1 meter. A detailed noise study will have to be conducted during the EPC stage.

HVAC

HVAC design criteria for the PCC plant will be the same as those used in the power plant design. Design ambient temperatures are as follows:

Outside dry bulb	37°C (99°F)
Summer wet bulb	25°C (78°F)
Winter temperature	-7°C (20°F)

These temperatures were selected based on the criteria that summer dry and wet bulb temperatures will not

exceed more than 1% of the time and winter temperature will be within the design temperature 99% of the time.

HVAC is designed so that the normally occupied air-conditioned areas will have a maximum temperature of 25°C (summer with 55% RH) and minimum winter temperature of 21°C. The temperature of areas that are ventilated only will be limited to 35°C.

Freeze Protection

Freeze protection design criteria for the PCC plant will be the same as those used in the power plant design. Freeze protection insulation with heat tracing will maintain the pipe or equipment temperature to at least 7°C based on the minimum ambient temperature of -9.4°C and a wind velocity of 7 m/s.

Air Emissions

The PCC plant will create new locations and sources of emissions because the diverted flue gas will come in contact with MEA and be discharged through stacks on top of the absorbers. Therefore, the existing operating permit issued under Title V of the Clean Air Act by EPA and Texas Commission on Environmental Quality (TCEQ) will be amended. The expected air emissions from absorber stacks are provided in Chapter 3.

Electrical

Electrical supply to the PCC plant will be from the power plant 138 kV switchyard, which will be stepped down to the required voltages. Motor voltages will be as follows:

AC motors <¾ hp	115 Vac, single-phase
AC motors ¾ to 200 hp	460 Vac, three-phase, three-wire
AC motors > 200 hp (except blowers and compressors)	4000 Vac, three-phase, three-wire
DC motors	120 Vdc

The flue gas blowers and compressors are >6 MW and will be on a 13.8 kV circuit.

2.3 Project Approach

2.3.1 Project Team Organization

For the FEED study, Bechtel assigned a dedicated team to execute the project. The team was led by a principal investigator (PI) who provided operational oversight and direction. The PI also provided continuity and technical expertise between other Bechtel fossil-fueled projects and this project and liaised with senior management.

The PI managed the day-to-day details of project execution and interfaced with National Energy Technology Laboratory (NETL) who funded the project as well as Panda Power who owns the Sherman NGCC power plant. The dedicated project team reported to the PI for all matters associated with the project and for day-to-day direction. Functional departments provided technical and quality oversight of the work being performed by the team as well as staffing and personnel support. Members of the project team worked remotely for almost the entire project period due to COVID-19 restrictions and limited access to the home office. Meetings among team members were held on a regular basis for proper direction and communication using Microsoft Teams. In addition to the dedicated team working on the FEED study, Bechtel staff members/specialists were used when necessary.

To manage the effort, responsibilities were broken down as follows:

- Project engineer (PE) for design engineering
- Process engineer and a process consultant for the technical details of PCC design
- Project procurement manager (PPM) for equipment supplier interface and to obtain bids for major equipment
- Project controls manager (PCM) for planning, scheduling, and cost support
- Construction manager for constructability issues

2.3.2 Work Process and Tools

Bechtel standard procedures and tools were used for this FEED study. These procedures and work processes were implemented from the beginning of the project through its completion. Drawings and calculations were independently checked by an individual qualified to have originated the drawing or system description.

Bechtel Standard Application Programs (BSAPs) support all studies and EPC work performed by Bechtel. The BSAPs are considered “best in class” for the industry and are used successfully on hundreds of Bechtel projects across various business lines spanning multiple geographical sites and locations. The BSAPs consist of

commercial and/or Bechtel-developed applications that are fully supported by its staff. The IS&T Enterprise Systems group maintains a full suite of standard applications to support the project's engineering, procurement, construction, and support service groups.

The documentation created for this study was kept in *InfoWorks*, Bechtel's proprietary electronic document management system. *InfoWorks* provides complete document management of project documents from a common repository, streamlining and automating the document handling and management process.

2.3.3 Boards of Technical Consultants

The FEED study relied on a technical review of the design by a board of technical consultants that included Kunlei Liu from University of Kentucky, Jonathan Gibbins from University of Sheffield, August Benz (process consultant), Electric Power Research Institute (EPRI), and Nexant. This virtual cold-eye review was hosted over teleconference in September 2020. Bechtel participants included the PI, project engineer, process engineer, and two scribes for record keeping.

The relevant process design documents (process flow diagrams, data sheets, heat and material balances, and supporting evidence used for design) were shared with the team a week prior to the sessions for familiarization.

Two 3-hour sessions were conducted to discuss the process design. During these sessions, process flow diagrams were displayed on the screen and reviewed in order of flow; comments, suggestions, and questions were addressed. Suggestions made throughout the sessions were recorded, and these are to be addressed during detailed design or in pilot testing. The complete record of discussion for both sessions is included in Appendix B.

Chapter 3: PCC Plant Design

3.1 Process Description

3.1.1 Overview

The post-combustion capture (PCC) plant consists of the following process systems:

- **Flue gas blower and quench.** Flue gas is directed from the existing heat recovery steam generator (HRSG) stacks to the PCC plant and cooled to its water saturation temperature of 51°C before entering the absorbers.
- **CO_2 absorption.** Two parallel absorbers remove the CO_2 from the flue gas using both lean and semi-lean 35 wt% monoethanolamine (MEA) solution.
- **Semi-lean amine system.** This system preheats and flashes a portion of the combined rich amine stream to produce a semi-lean amine stream for injection to the absorbers.
- **CO_2 stripping and heat integration.** Rich amine from the absorbers is heat exchanged against hot lean amine to increase stripper feed temperature. The rich amine is regenerated for reuse by liberating the CO_2 from the amine solution in a refluxed steam-reboiler stripper.
- **CO_2 compression and drying.** The CO_2 gas is compressed, dried, further compressed, and liquefied.
- **CO_2 pumping and dense phase transfer.** Liquefied CO_2 is pumped to dense phase conditions and cooled to meet specifications for pipeline transport.
- **Amine reclaiming.** A two-stage, dual-pressure, semi-continuous thermal reclaimer unit removes non-volatile thermal and oxidative degradation products including heat stable salts (HSS) from the lean amine.
- **Amine storage.** Lean amine and rich amine tanks are provided for normal and emergency operations.

See Process Flow Diagram 26301-000-M5-YA-00001 at the end of this chapter, the Block Flow Diagram in Figure 3-1, and summary of process values in Table 3-1 for the overall process scheme characteristics. These systems are described in detail in the following sections.

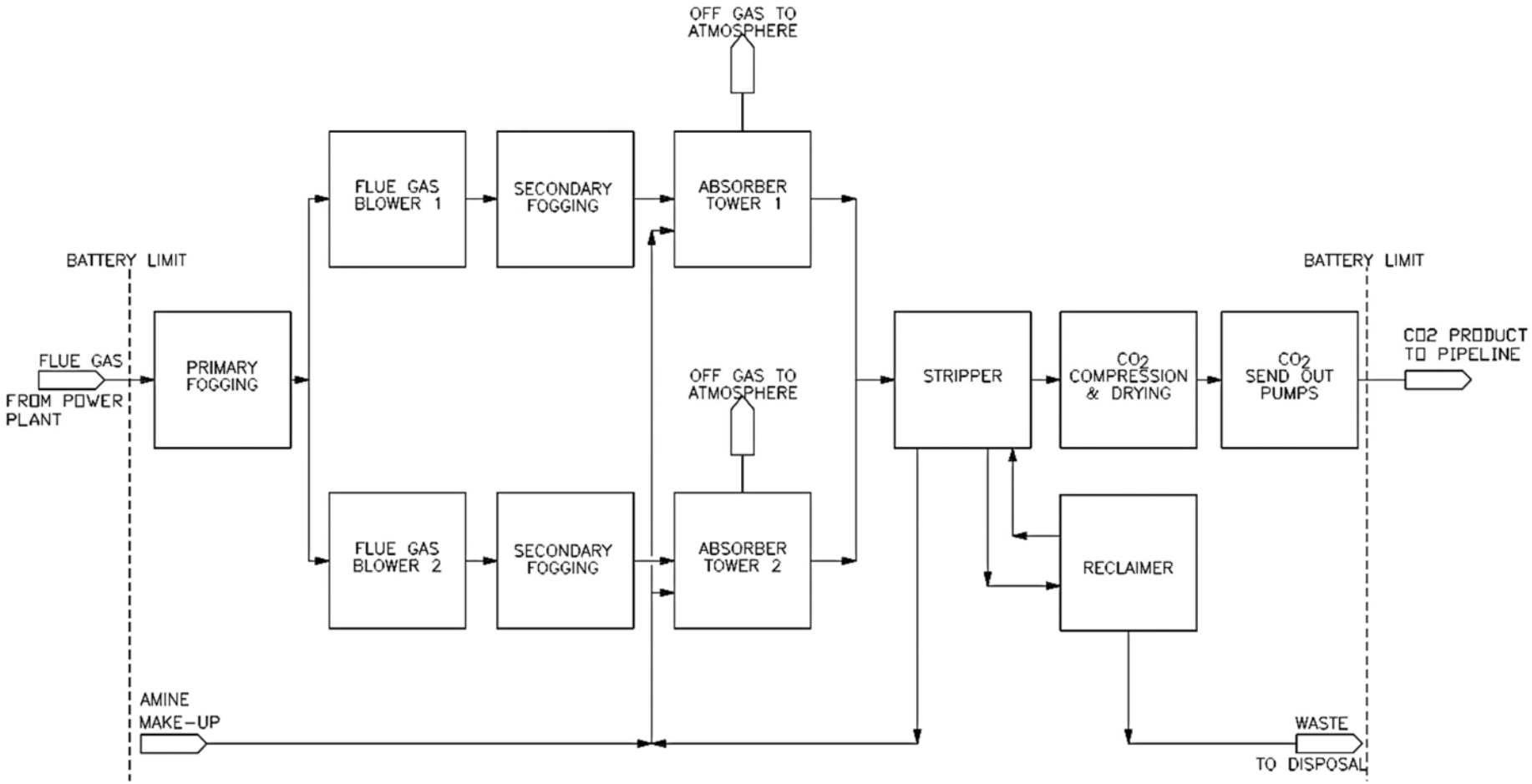

Figure 3-1

Block Flow Diagram

Table 3-1

Summary of Process Values

Flue Gas from NGCC Sm^3/h / kg/s	2,110,000 Sm^3/h / 704 kg/s
Flue Gas Velocity in Absorbers (superficial) m/s	2.76 m/s
Liquid-to-Gas ratio (L/G) kg/kg	1.069
kg Steam (3.3 bara) per kg CO_2 captured kg/kg	1.62
Heat Usage; Steam Flow kg/h	208,100 kg/h
GJ/tonne of CO_2 captured	3.65
Solvent Usage kg MEA/tonne CO_2 captured	2 kg/tonne
Reclaimer Feed; kg lean solvent per day kg/hr	2605 kg/hr
Lean Loading mole CO_2 per mole MEA	0.254
Rich Loading mole CO2 per mole MEA	0.475
Pressure Drop through Absorbers (total) kPa	6.10 kPa
Reclaimer Residue kg/h	354 kg/h

The process flows and equipment designs that make up this FEED study for the Sherman PCC plant are based on a heat and material balance (HMB) from a ProMax computer simulation, which was prepared based on the design criteria detailed in Section 2.0 of this report. It is recognized that there are uncertainties with the simulation HMB results. Section 17 of this report discusses these uncertainties and recommends mitigation efforts for future phases of the Sherman project.

The HMB and process flow diagrams referenced in the following sections are attached at the end of this chapter.

3.1.2 Flue Gas Blower and Quench

See Figure 3-2 and Diagram 26301-000-M5-BA-00001 for flue gas blower and quench process flow.

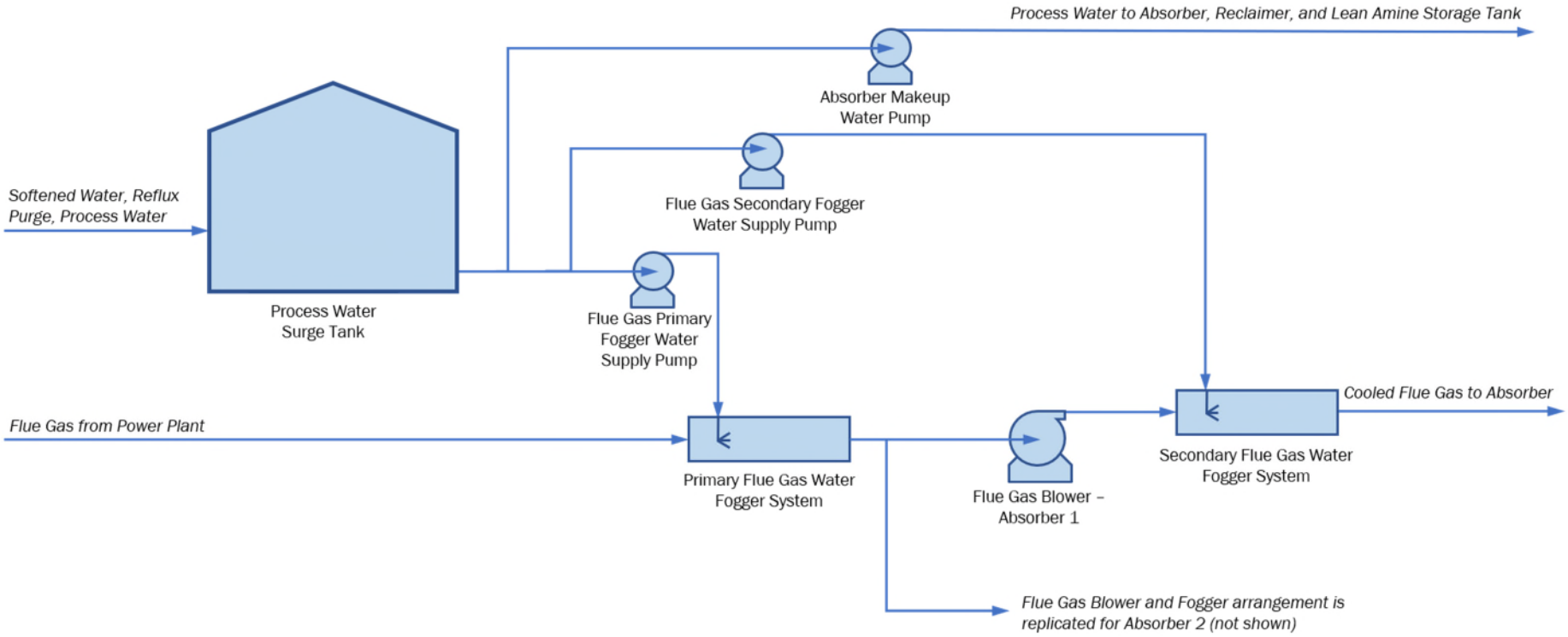

Figure 3-2

Flue Gas Blower and Quench Diagram

The flue gas is diverted from the existing NGCC stacks in a way that will not affect the operation of the power plant. The flue gas ducts to the PCC plant are tied into the existing HRSG stacks near their bases. Shutoff dampers are installed to isolate the ducts from the main stacks when the PCC plant is shut down. In normal operation, the PCC plant shutoff dampers will be wide open. The NGCC stack dampers will be replaced with modulating shutoff dampers to ensure that the desired flue gas flow is directed to the PCC plant.

The flue gas is drawn through the ducts to the PCC plant by two blowers operating in parallel. The flue gas blowers (MA-101/MA-102) are controlled using variable-frequency drives and suction-throttling dampers to control the pressure in the main ducts and maintain the desired flow through each blower. It is necessary to maintain precise pressure control in the ducts to avoid negative impacts on the NGCC operation and to prevent air ingress into the PCC plant through the stack openings.

The combined flue gas duct up to the flue gas water fogger system (MS-101A) is insulated to maintain a surface temperature greater than 75°C to avoid sulfurous acid (H_2SO_3) condensation.

The flue gas is analyzed online for CO_2 concentration and flow to each absorber. These measurements can be used to adjust the flow of lean amine to the two absorbers.

At the inlet to the PCC ductwork, a temperature measurement is used as a feed-forward signal to adjust the amount of water injected through the primary flue gas water fogger system (MS-101A), which cools the flue gas from 92°C to its water dewpoint of about 48°C. A temperature control signal downstream of the fogging system ensures that the gas is maintained at its water dewpoint.

After the flue gas passes through the flue gas blowers (MA-101, MA-102), its temperature increases about 13°C and a secondary fogging system is installed on the discharge of each blower to cool the flue gas to its final dewpoint of 51°C. It is advantageous to cool the flue gas for optimum CO_2 absorption. The water flow rate to the secondary flue gas water fogger systems (MS-101B/C) is adjusted by a downstream temperature controller.

The water used in both primary and secondary flue gas water fogger systems (MS-101A and B/C) is recycled process water from the process water surge tank (MT-104), which is primarily composed of condensate recovered from the CO_2 compression system and from stripper reflux purge. Tank MT-104 is also supplemented by condensate from the NGCC zero liquid discharge (ZLD) wastewater system.

The flue gas water fogger supply pumps (MP-109A/B and MP-209A/B) increase the pressure of the water to allow it to be filtered and injected into the duct through atomizing nozzles to cool the flue gas to its dewpoint temperature.

3.1.3 CO_2 Absorption

An absorber is shown in Figure 3-3 and Process Flow Diagrams 26301-000-M5-CN-00001 and -00002.

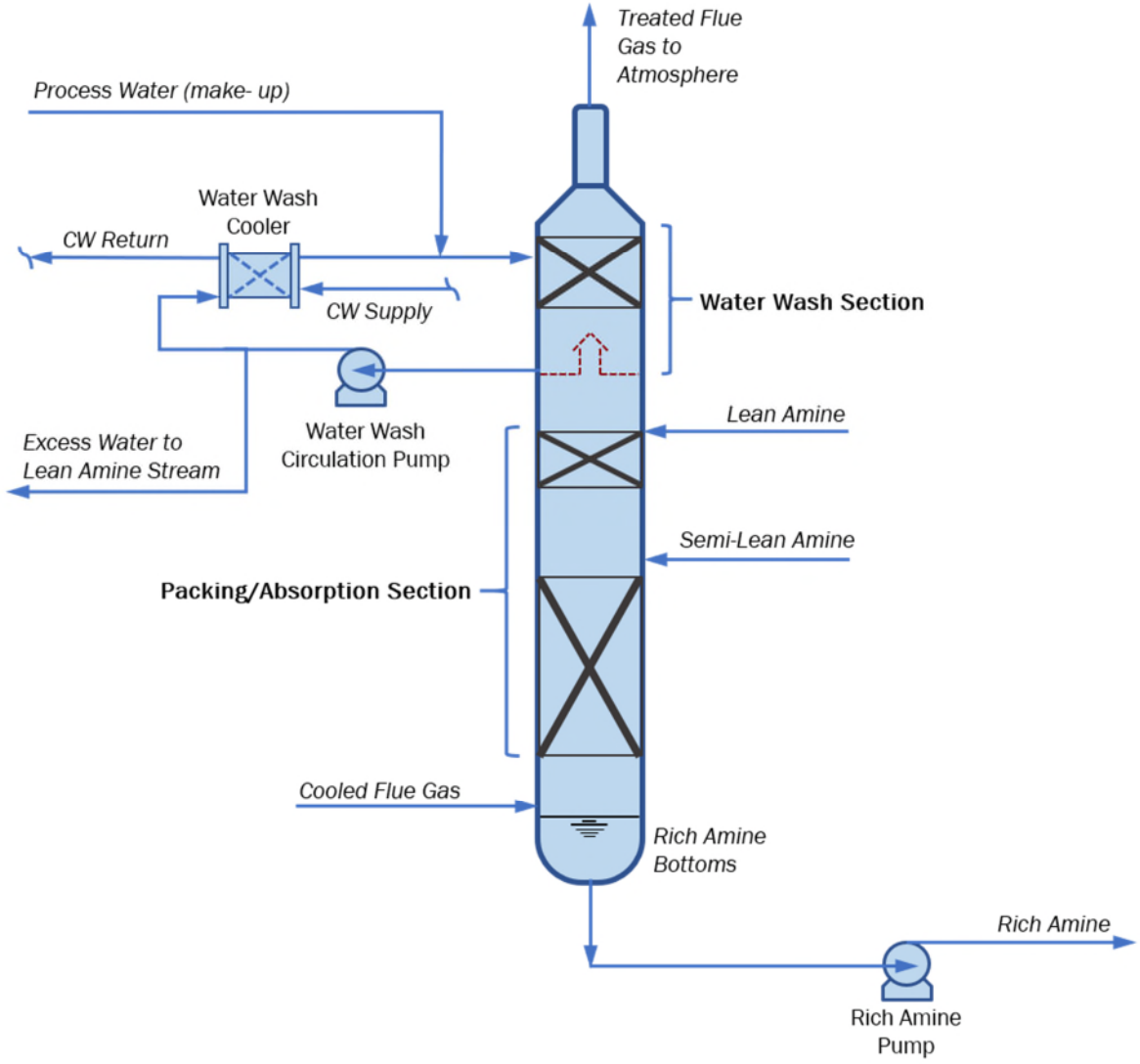

Figure 3-3

Absorber Diagram

The absorption of CO_2 from the flue gas is accomplished using two identical absorption towers operating in parallel.

Cooled flue gas at 51°C enters the bottom of the CO_2 absorbers (T-101 and T-102) through ducts from the flue gas blowers. Inlet distribution devices are not required because equal gas flow is quickly achieved across the absorber's cross-section soon after entering the first packed bed. Each absorber contains two packed absorption beds totaling 15 meters in height and a single water wash bed 4 meters in height. The beds contain stainless steel structured packing. The flue gas is contacted counter-currently with 35 wt% monoethanolamine (MEA) solution to absorb CO_2 as it passes through the absorption section of the tower.

Fully regenerated lean amine at 49°C is directed to the top absorption bed using a liquid distributor. The lean amine flow to the absorber can be adjusted based on the total amount of CO_2 in the flue gas entering the absorber to achieve a target CO_2 capture rate of 85%. As it leaves the absorption section, the flue gas passes through a mist eliminator to limit amine solution carryover into the water wash section of the absorber tower. Partially regenerated (semi-lean) amine at 57°C is also injected between the two packed absorption beds. The semi-lean amine, together with the amine from the top packed bed, is distributed across the lower packed bed using a liquid distributor.

Internal to the absorbers, the water wash section at the top of the column consists of one bed of stainless steel structured packing. Wash water is collected in a chimney tray below the water wash section and pumped out by the wash water recirculation pump (MP-102A/B [Absorber 1]; MP-104A/B [Absorber 2]). The recirculated water is cooled in the wash water cooler (ME-101 [Absorber 1]; ME-104 [Absorber 2]) to about 38°C and is then returned via flow control to a liquid distribution tray above the water wash packing. To maintain the absorber/stripper water balance, the temperature of the flue gas exiting the absorber is controlled at 49°C by throttling cooling water flow to ME-101/104. Wash water makeup is supplied from the process water surge tank, MT-104, by the absorber makeup water pump (MP-119A/B). Level control on the chimney tray sends excess water (makeup water and water condensed from the flue gas) and collected amine back to the lean amine stream. This blowdown of the water wash system keeps the amine concentration from building up in the water wash system. The water wash section reduces MEA content in the flue gas to <6 ppm. After the flue gas passes through a final mist eliminator, its flow rate and CO_2 content are measured and the resultant flue gas is discharged to the atmosphere.

Ammonia in the flue gas feed plus ammonia formed by degradation of MEA during operations is also emitted with the flue gas. Total ammonia emissions are estimated at 10 ppm for each absorber.

Rich amine bottoms product from the CO_2 absorbers (T-101 and T-102) is taken by the rich amine pumps (MP-101A/B [Absorber 1]; MP-124A/B [Absorber 2]), combined into a single stream, and passed through the rich amine mechanical filter (MF-102A/B)—which removes particulates 10 microns in size or greater. Approximately 80 wt% of the combined filtered rich amine is diverted to the lean/rich heat exchanger (ME-108A-H) and the remaining 20 wt% to the semi-lean/rich amine heat exchanger (ME-103A/B).

3.1.4 Semi-Lean Amine System

For the semi-lean system, see Figure 3-4 and Process Flow Diagrams 26301-000-M5-CN-00003 and -00004.

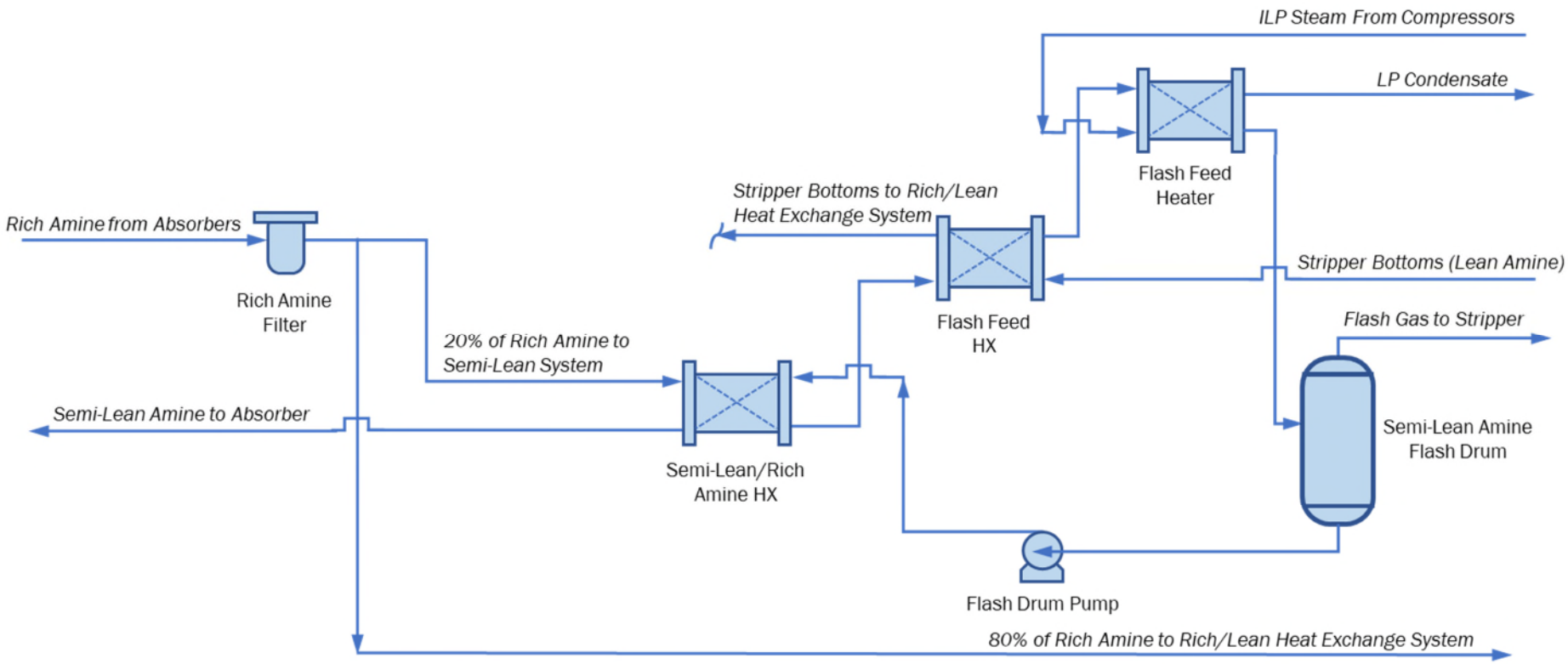

Figure 3-4

Semi-Lean Amine System Diagram

A total of 20 wt% of the combined rich amine flow is sent to the semi-lean/rich amine heat exchanger (ME-103A/B) where it is heated to about 110°C. The rich amine stream then flows to the flash feed heat exchanger (ME-107) where the rich amine is heated by the stripper bottoms stream to approximately 113°C. The rich amine then enters the flash feed heater (ME-109) where it is heated to approximately 123°C with low-pressure steam generated in the CO_2 compressor system. The flow of hot stripper bottoms (lean amine) to ME-107 is controlled to ensure that all the LP steam generated in the compression section is used to heat the rich amine stream in ME-109. The hot rich amine from ME-109 is depressurized and flashed in the semi-lean amine flash drum (MV-201). The CO_2-rich vapor leaves the top of the semi-lean flash drum (MV-201) at 115°C and is directed to the stripper (T-103). The semi-lean amine underflow leaves the bottom of the semi-lean flash drum (MV-201) and is pumped via the flash drum pump (MP-106 A/B) through the semi-lean/rich amine heat exchanger (ME-103A/B) where it is cooled to approximately 57°C. The cooled semi-lean amine is then fed to the two CO_2 absorbers (T-101 and T-102).

3.1.5 CO_2 Heat Integration and Stripping

Figures 3-5 shows rich/lean amine heat exchange, and Figure 3-6 shows the stripper function. See also Process Flow Diagrams 26301-000-M5-CN-00003 and -M5-CN-00005.

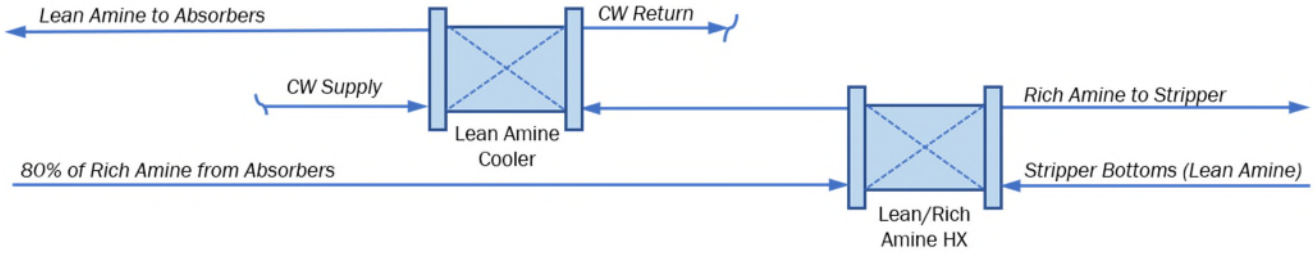

Figure 3-5

Rich/Lean Amine Heat Exchange Diagram

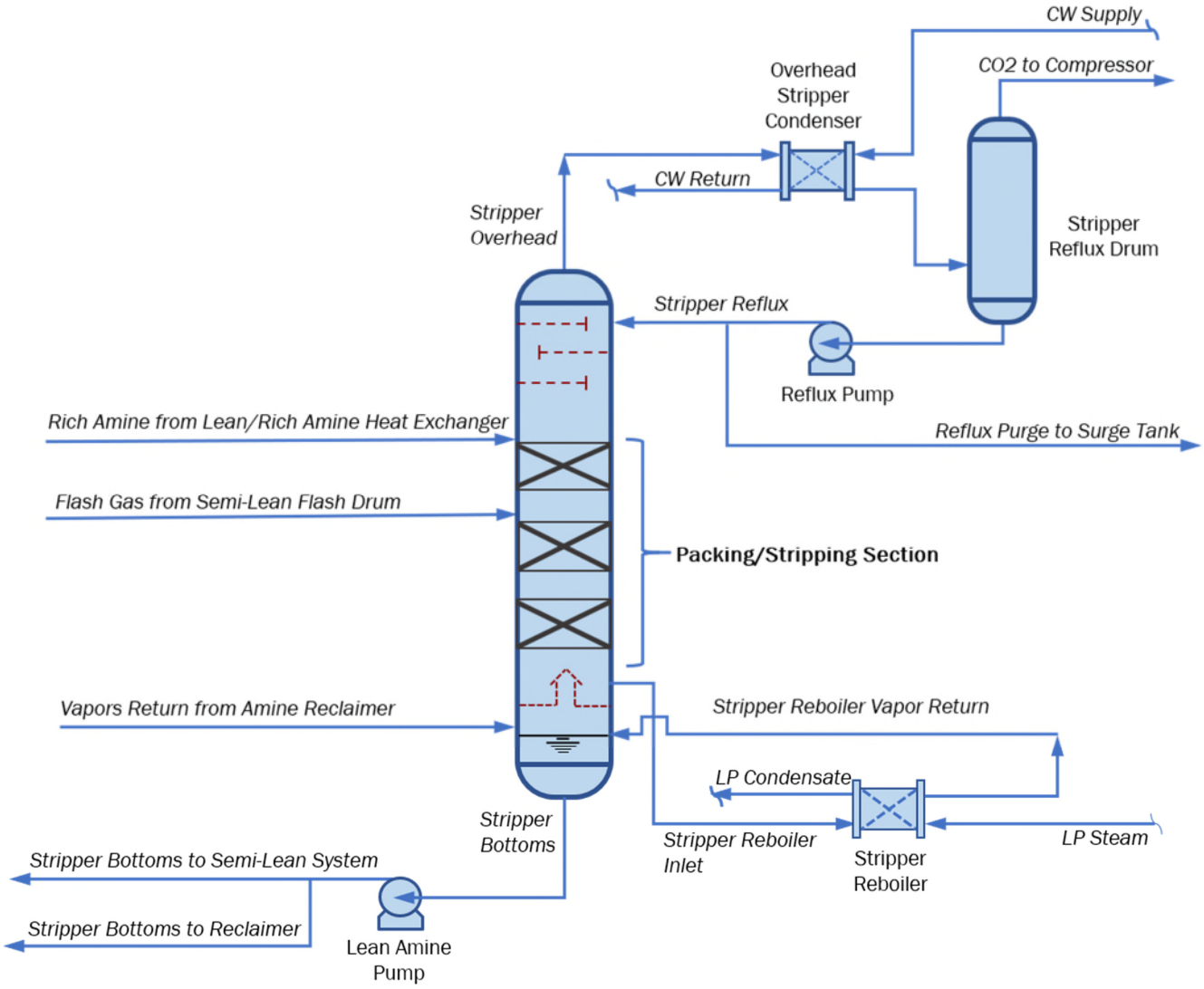

Figure 3-6

Stripper Diagram

A total of 80 wt% of the rich amine stream exiting the rich amine mechanical filter (MF-102A/B) is directed to the lean/rich amine heat exchanger (ME-108A-H) for heat recovery from stripper bottoms. The rich amine exits ME-108A-H at approximately 121°C and is fed to the stripper (T-103).

The stripper column contains three stripping beds of stainless steel structured packing totaling 20 meters in overall height, plus three rectifying trays with downcomers.

The rich amine feed flashes as it enters the stripper above the top of the packed beds. Flashed feed vapor, together with vapors from the stripping section, passes up through the rectifying trays. These trays are refluxed by condensate from the overhead stripper condenser (ME-111).

The flashed rich amine liquid is distributed across the column cross-section together with liquid from the rectifying section and falls through the three packed sections where it is counter-currently contacted with vapor generated in the stripper reboiler (ME-110A-H). As the temperature of the rich amine increases, the CO_2 is liberated from the solution.

Flash gas from the semi-lean flash drum (MV-201) enters the stripper between the second and third packed beds.

Heat input to the stripper is by once-through, natural circulation, thermosyphon stripper reboilers (ME-110A-H). Reboiler feed is through a chimney tray seal pan below the lower packed bed. The heating medium supplied to the stripper reboilers is 3.3 bara saturated steam. The heat input steam flow to the reboilers is controlled by the stripper bottom tray liquid temperature. This is further explained in Chapter 7.

The lean amine flows from the bottom of the stripper to the suction of the lean amine pump (MP-105A/B). The lean amine pump sends the stripper bottoms through the lean amine mechanical filter (MF-105A/B) to remove particulates larger than 10 microns in size. About 0.13 wt% of the lean amine mass flow is directed to the amine reclaimer system (MS-102), as discussed in Section 3.1.8. Lean amine is further cooled to 50°C using cooling water from the power plant in the lean amine cooler (ME-102). The cool lean amine is then sent to the CO_2 absorbers (T-101 and T-102).

Vapor leaves the top of the stripper at approximately 109°C and 2.3 bara and is fed to the overhead stripper condenser (ME-111), cooling the stream to approximately 49°C. The condensed MEA and water are separated from the gas stream in the stripper reflux drum (MV-202). From there, approximately 10% of the liquid is refluxed back to the trayed rectifying section of the stripper on flow control by reflux pump (MP-107 A/B) while the balance of stripper overhead condensate is sent to the process water surge tank (MT-104). The gas stream leaving the stripper reflux drum (MV-202) is approximately 97.6 wt% CO_2; the balance of the composition is water with traces of MEA vapor.

3.1.6 CO_2 Compression and Drying

Figure 3-7 shows CO_2 compression; see also Process Flow Diagrams 26301-000-M5-QG-00001 and -00002.

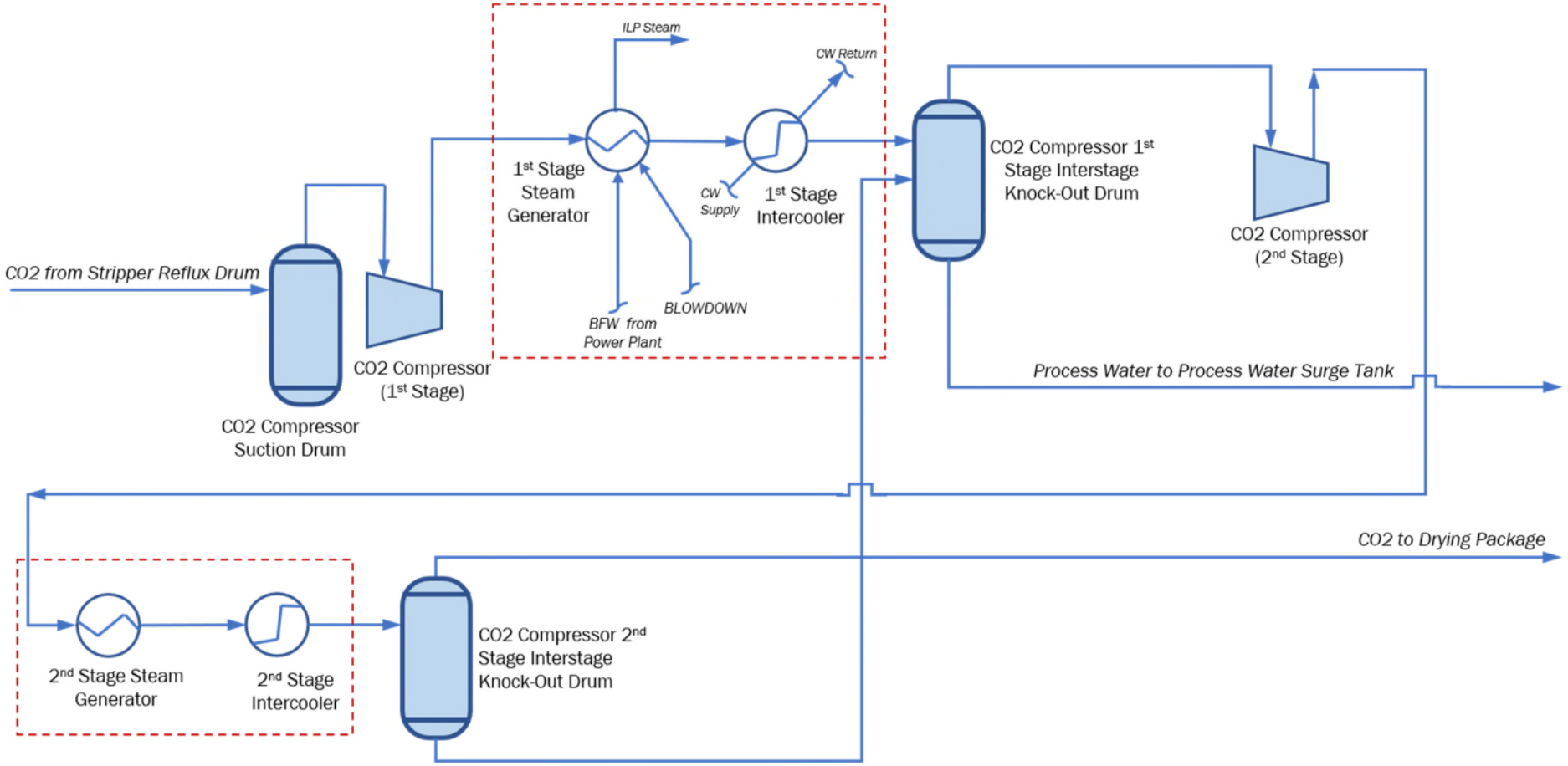

Figure 3-7

CO_2 Compression Diagram

The gas stream leaving the stripper reflux drum (MV-202) is approximately 97.6 wt% CO_2; the balance is predominantly water vapor. Any liquid carried over from the stripper reflux drum (MV-202) or that condenses in the line is removed in the CO_2 compressor suction drum (MV-203). Gas enters the CO_2 compressor with three in-line compression stages at 2 bara and is compressed to 7 bara in the first stage (MC-103A), 24 bara in the second stage (MC-103B), and 83 bara in the third stage (MC-103C). The pressures after the first and second stages may vary depending on the final compressor supplier. After each stage, heat generated during compression is recovered by generating intermediate low pressure (ILP) steam, which is used to heat rich amine in the flash feed heater (ME-109) for semi-lean amine production. Further cooling to 38°C is provided after each compression stage by heat exchange with cooling water. Condensed water is removed by Interstage Knock-Out Drums MV-104 and MV-105. The condensed water is recovered for amine system makeup from the two higher pressure drums.

Drying of the CO_2 to less than 50 ppmw water is done by passing the partially compressed (second-stage) gas to the CO_2 drying package (MS-104)—an adsorption bed–type dryer. Two beds are used, one dries while the other is regenerated. A side stream of dried CO_2 is used as a drying media. The CO_2 regeneration gas is compressed in a blower and heated before passing through the regenerating bed, then cooled for water removal. Recovered water is collected in a knock-out drum and the CO_2 returned to the main CO_2 inlet stream, Figure 3-8.

3.1.7 CO_2 Pumping and Dense Phase Transfer

See Figure 3-8 and Process Flow Diagram 26301-000-M5-QG-00002 for pumping of CO_2 product.

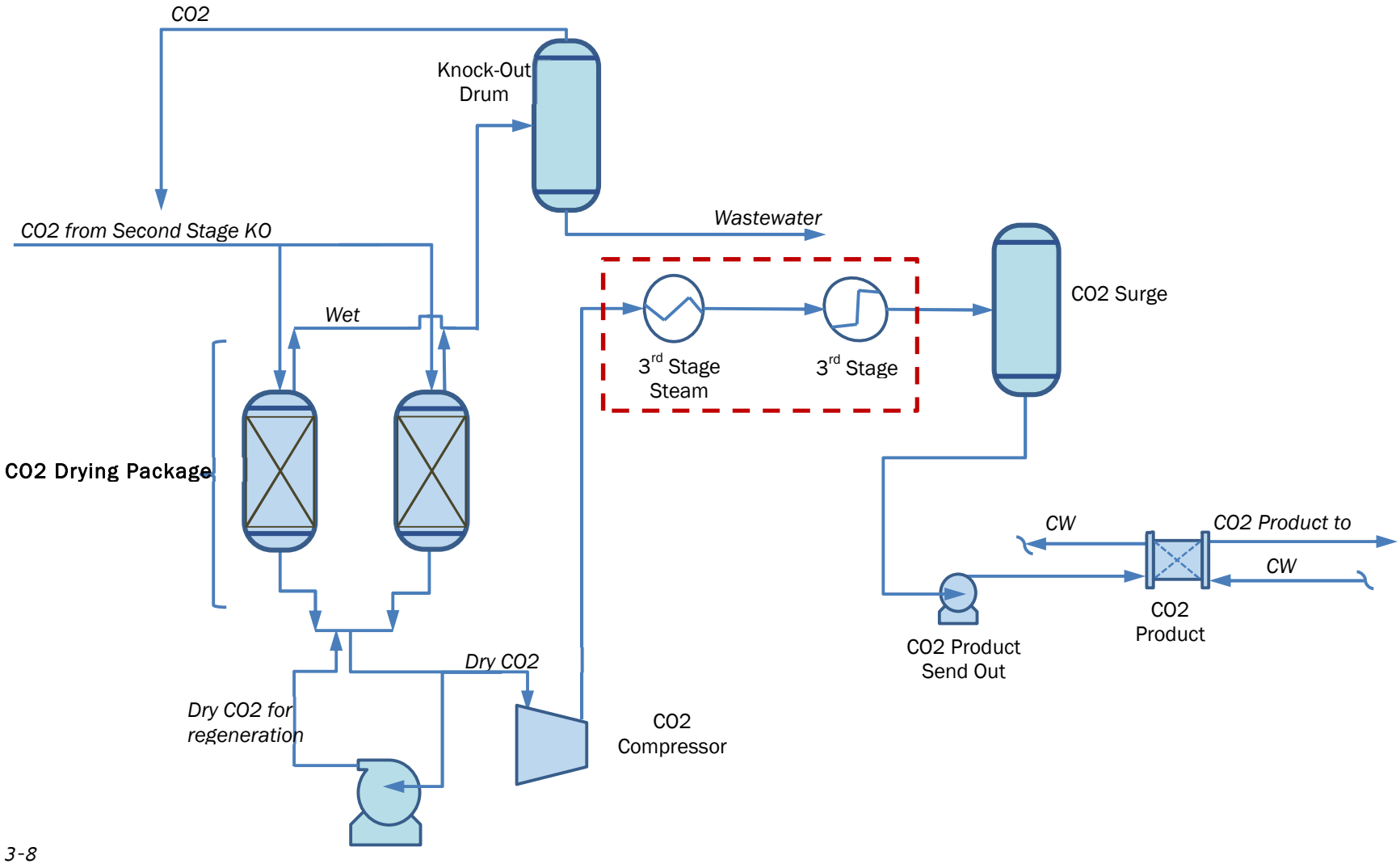

Figure 3-8

CO_2 Drying and Pumping Diagram

CO_2 from the third-stage compressor is a dense phase fluid at 83 bara. The dense phase CO_2 is cooled in the CO_2 compressor third-stage steam generator (ME-116) and the CO_2 cooler (ME-117). The dense phase CO_2 then flows to the CO_2 surge drum (MV-106) from which it is pumped to the battery limit by the CO_2 product send-out pump (ME-108A/B) at a pressure of 151 bara into the pipeline. The product CO_2 is finally cooled in the CO_2 product cooler (ME-118) to 38.6°C.

3.1.8 Amine Reclaiming

See Figure 3-9 and 26301-000-M5-CN-00006 for amine reclaimer process flow.

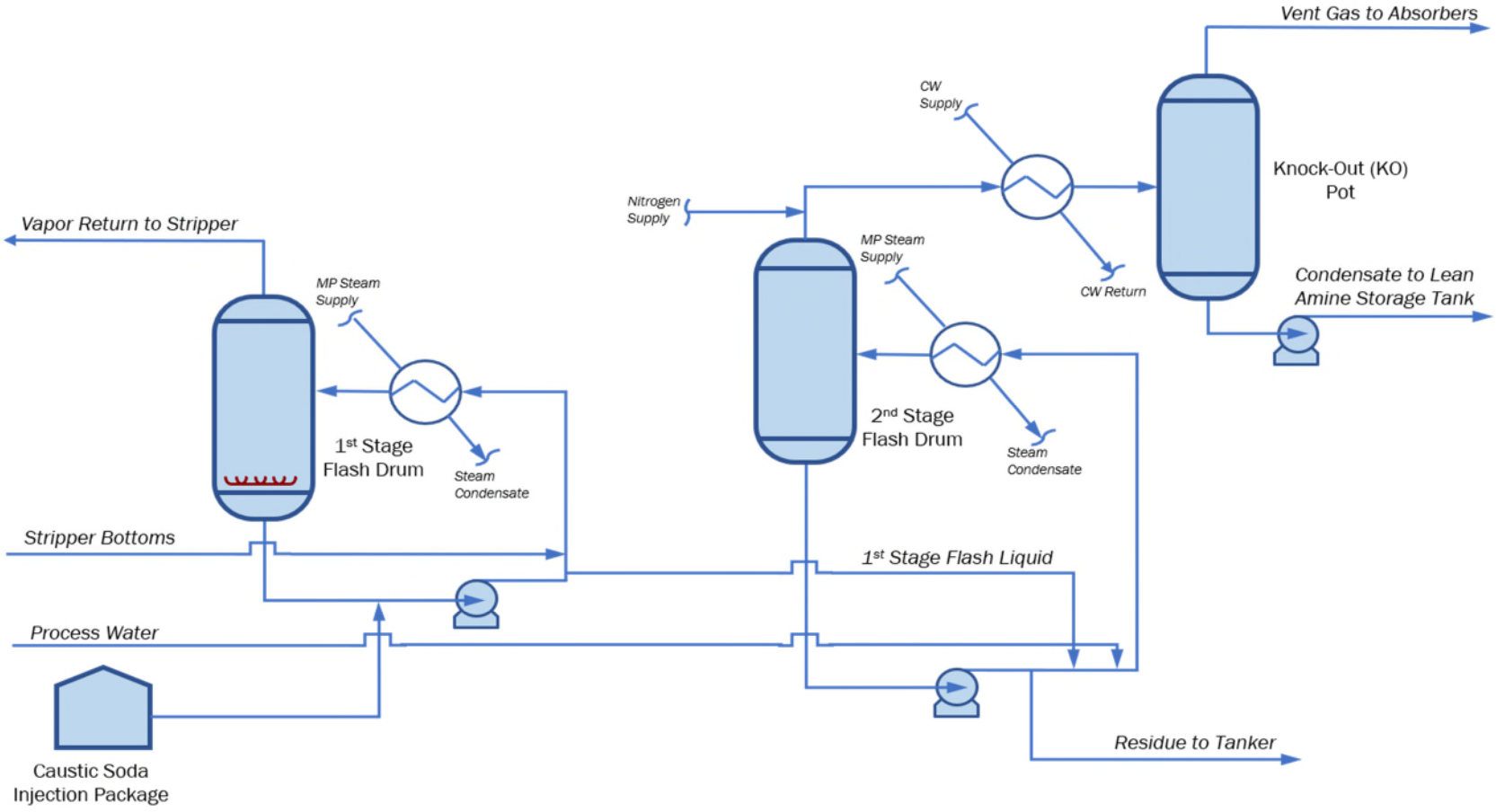

Figure 3-9

Amine Reclaimer Diagram

Approximately 0.13% of the lean amine flow from the lean amine pump (MP-105A/B) discharge is fed to the amine reclaimer system (MS-102). The reclaimer is a two-stage, dual-pressure, thermal flash reclaiming system, which includes a caustic injection unit for neutralization of heat-stable salts (HSS). During normal operation of the absorber/stripper system, the circulating amine is subject to thermal and oxidative degradation and undergoes chemical reactions, producing undesirable products. Chemical reactions with oxygen, sulfur dioxide, and other contaminants in the flue gas can produce acids, which combine with amine to produce HSS. Along with HSS, thermal degradation products formed primarily in the stripper are expected to be almost three times the amount of the HSS. These degradation products are expected to be similar to those characterized in work at TCM. Chemically bound amine is released from the HSS in the reclaimer system by heating with medium-pressure steam and neutralization with caustic soda.

Lean amine feed to the first reclaimer flash drum is flashed at 150°C and 2.6 bara, with the flash vapor vented directly to the stripper column. Process water is added to the first-stage flash residue stream to improve amine recovery in the second-stage flash. The residue/water mix is then flashed in the second-stage reclaimer flash drum at 150°C and 1.1 bara. Amine and water from the second-stage flash are condensed and pumped to the lean amine storage tank. Residual sludge from the second-stage flash, which contains the non-volatile amine degradation products, is quenched with water to 100°C and sent to a road tanker for off-site disposal. The off-gas from the second-stage vent condenser contains nitrogen and moisture only. It is vented through the stacks on top of the absorbers.

3.1.9 Amine Storage

Figure 3-10 and Process Flow Diagram 26301-000-M5-CY-00001 illustrate amine storage.

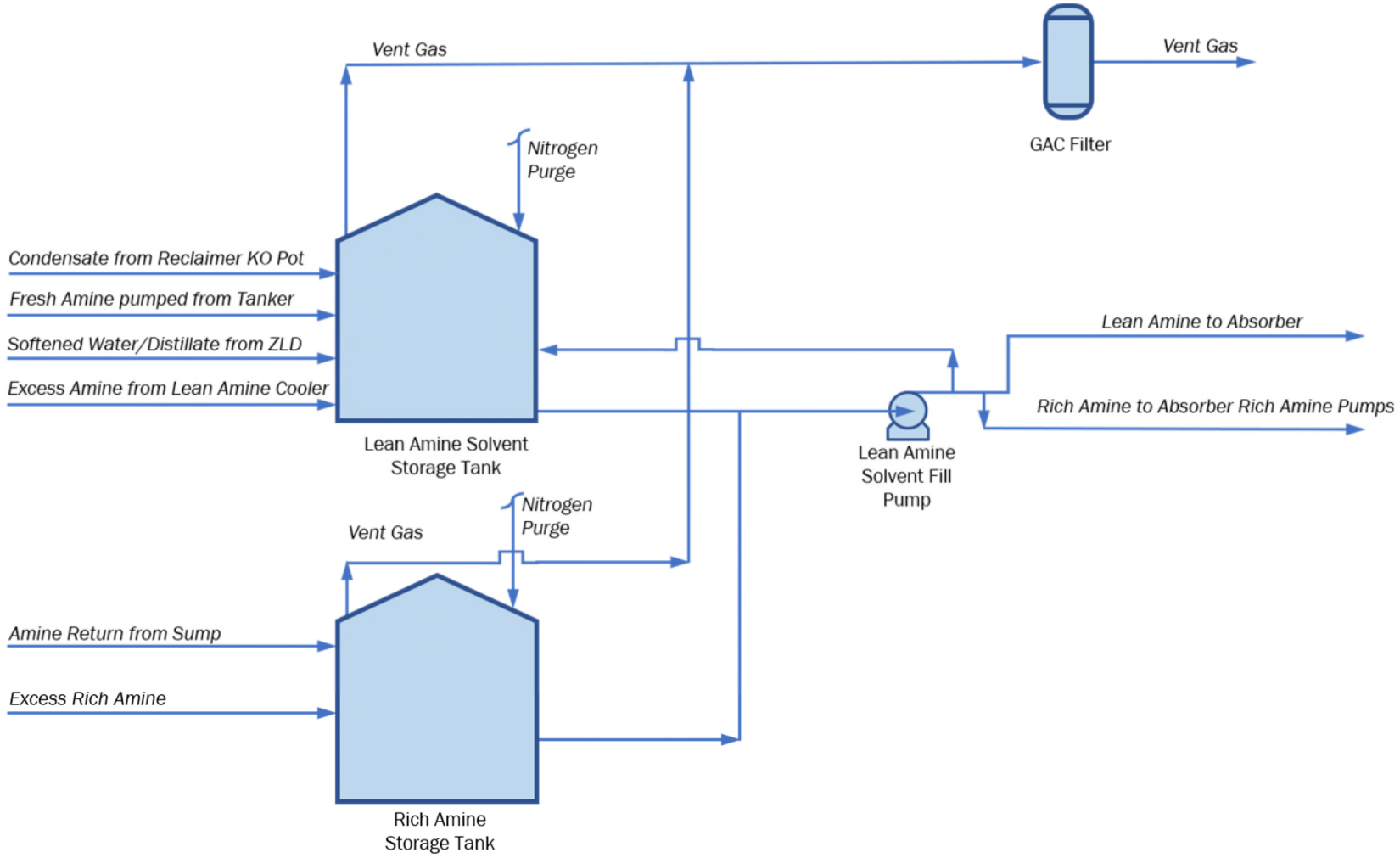

Figure 3-10

Rich and Lean Amine Storage Diagram

Amine storage is provided by two storage tanks of 1630 m^3 capacity each (working capacity of 1395 m^3 each). The tanks are provided with a nitrogen blanket system and have a common granulated activated charcoal (GAC) filter on their atmospheric vents. The estimated total solvent inventory in the PCC during normal operations is estimated to be about 1250 m^3.

The lean amine solvent storage tank (MT-102) is used to store lean amine produced or removed from the system during normal PCC plant operations or during shutdowns. Fresh amine from solvent suppliers is delivered by truck to MT-102 for dilution and inventory makeup.

Rich amine from the amine sump, which collects plant drains, or unstripped amine from the unit after sudden shutdown is stored in the rich amine storage tank (MT-101).

The lean amine solvent fill pump (MP-111A/B) provides for transfer and/or mixing of amine solvent to, from, or in tanks MT-101 or MT-102.

3.2 Process Performance

See Heat and Material Balance (HMB), Document 26301-000-M4-CN-00001, Rev 1, and process flow diagrams (PFDs) at the end of this section for process stream data. The process stream numbers are identified in the PFDs; major streams are listed in Table 3-1. Note that process stream data for the reclaimer system (MS-102) are shown only on the reclaimer PFD (26301-000-M5-CN-00006).

Table 3-2

Major Process Streams

Stream No.	Description	PFD
001	Flue Gas from NGCC	26301-000-M5-BA-00001
004A	Process Water to Primary Fogger, MS-101A	26301-000-M5-BA-00001
100 [200]	Cooled Flue Gas to Absorber 1 [2]	26301-000-M5-BA-00001 [00002]
106 [206]	Rich Amine Flow from Absorber 1 [2]	26301-000-M5-CN-00001 [00002]
302	Hot Rich Amine to Stripper	26301-000-M5-CN-00005
311	Rich Amine to Semi Lean Flash Tank	26301-000-M5-CN-00004
104 [204]	Lean Amine to Absorber 1 [2]	26301-000-M5-CN-00001 [00002]
105 [205]	Semi-Lean-to Absorber 1 [2]	26301-000-M5-CN-00001 [00002]
314	Stripper Bottoms	26301-000-M5-CN-00005
312	Flash Gas from Flash Drum to Stripper	26301-000-M5-CN-00004
316	Reclaimer Feed	26301-000-M5-CN-00005
546	LP Steam from NGCC	26301-000-M5-SC-00001
543	Cooling Water from NGCC	26301-000-M5-WL-00001
525	LP Steam to Reboiler	26301-000-M5-CN-00005
400	Stripped CO_2 to Compressor	26301-000-M5-CN-00005 26301-000-M5-QG-00001
418	CO_2 Product	26301-000-M5-QG-00002

The HMB for the PCC plant is based on the Normal Case, Reclaimer Off condition. The software used for process simulation was ProMax 4.0. The goal was to achieve the target CO_2 recovery rate of 85% at minimum capital investment. The model showed 85% CO_2 recovery with energy consumption of 1.62 kg steam/kg CO_2 (as measured in kg of steam consumed in the stripper reboiler per kg of CO_2 leaving the stripper overhead). Energy consumption is 3.65 GJ/Tonne CO_2 (this does not include electrical energy used in pumping and compression, which amounts to ~29.3 MW).

The normal case HMB is based on 704 kg/s flue gas feed from the power plant to the PCC plant. This corresponds to ~68.5% of the total power plant flue gas (3,700,080 kg/h; see Table 2-2) being diverted when both gas turbines are operating at full load at 95°F ambient temperature and 43% relative humidity, with the evaporators on and duct burners off. The temperature of the flue gas at HRSG exit is 92.2°C under these conditions. The CO_2 captured for this normal case is ~129 tonnes/hr.

The flue gas composition used in the HMB is provided in Section 2.2 (Design Basis) of the report. It is based on the flue gas composition provided by the gas turbine OEM, with minor adjustments based on flue gas analysis conducted during tests at the Sherman power plant.

The two 50-percent identical absorbers (T-101 and T-102) in the PCC plant were modeled as a single tower in ProMax with five theoretical stages. The absorber water wash section was modeled separately from the absorber with circulating water to two theoretical stages of packed bed and fresh water to the top of the bed. Lean amine loading to the absorber is 0.254 mol CO_2/mol MEA, and rich amine loading from the absorber is 0.475 mol CO_2/mol MEA. A total of 20% of the rich amine is returned to the absorbers as semi-lean amine after flashing and cooling.

For flue gas pressure drop, differential pressure in the absorption section is set at 5.5 kPa (0.8 psi) and wash water section as 2.5 kPa (0.4 psi) in the model. This includes 1 kPa for inlet and 1 kPa for outlet and for the demister, internal trays, and packing.

The stripper (T-103) was modeled with 11 theoretical stages with rich amine feed to Stage 2 and rich amine flash gas from the semi-lean system to Stage 4. Clean amine and water vapor from the reclaimer enter the stripper at the bottom. Differential pressure in the stripper is set at 0.34 bar (5 psi). Steam flow of 208,100 kg/h is provided to the reboiler at 3.13 bara and 135°C.

3.3 Process Cooling and Water Balance

The flue gas must be cooled from its supply temperature of 92.2°C to improve amine absorption of CO_2. A 17.1 kg/sec (61,456 kg/h) distillate stream at 50.5°C is modeled to saturate the flue gas feed stream to the absorbers.

The process design philosophy uses heat recovery to limit the quantity of externally supplied heating energy or heat sink medium to the degree that capital investment is not significantly increased. The cooling water supply temperature used in the model was 28.6°C (83.4°F) based on the existing NGCC circulating water design temperature. The actual cooling water supply temperature will be lower more than 95% of the time based on wet bulb temperature data for the Sherman area.

The existing power plant cooling tower is used as the heat sink for the PCC plant. This was possible because the cooling tower is sized for all steam entering the steam turbine being condensed. Power plant condenser heat load will reduce when the PCC plant is in operation due to diversion of LP steam; therefore, the load on the cooling tower will be reduced. An integrated water balance confirmed that the circulating water can be used for cooling the PCC plant and flue gas can be cooled using ZLD distillate and PCC process condensate without exceeding the raw water influent design flow to the power plant. No additional cooling tower capacity is envisaged for the PCC plant.

The integrated water balance is attached at the end of this section. For process water flows within the PCC see Appendix U.

3.4 Pressure Safety Valves and Relief Considerations

3.4.1 Pressure Relief Philosophy

Overpressure is a potential risk for the integrity of equipment and piping. The primary protection against overpressure is the detection of process parameter(s) outside of operating limits and initiation of an action(s) via DCS to prevent the design basis envelope from being exceeded. The primary protection is shown on the P&IDs (Appendix A) and in the Cause and Effect Chart (Appendix C, Doc. No. 26301-000-J4-JD-00001).

The secondary protection is a fail-safe relief system, for example, a mechanical device such as a pressure safety valve (PSV), which operates independently of the automated control and safeguarding systems. The secondary system is described in Doc. No. 26301-000-30R-M01G-00002 (Appendix D).

Inherently safe design features are provided for all causes, such as the following:

- Blocked outlets
- External fire
- Power failure
- Instrument air failure
- Exchanger tube rupture
- Abnormal heat input
- Control malfunction
- Loss of cooling
- Reverse flow

For additional information on potential risks due to overpressure, see HAZOP in Chapter 13.

3.4.2 Depressurization Philosophy

The PCC plant contains CO_2 at supercritical conditions. In the event of leakage or equipment failure, the released CO_2 will reach extremely low temperatures, causing a hazard to surrounding equipment and personnel. In addition, concentrations of CO_2 may reach dangerous levels (asphyxiation).

The bulk of the supercritical CO_2 is stored in the CO_2 surge drum (MV-106); the plant is provided with a valve to depressurize the CO_2 surge drum and associated equipment. While depressurizing, the compressor shall be shut down and outlet emergency shutdown (ESD) valve closed to limit the depressurizing volume to the CO_2 surge drum contents only. Separate depressurizing facilities are provided on the CO_2 compressor second-stage interstage knock-out drum (MV-105) to depressurize the compressor.

During depressurization, low temperatures are envisaged, and the metallurgy of the system is specified to protect against low-temperature embrittlement. The rate of depressurization will be designed to ensure that the temperature in the CO_2 surge drum is maintained above -50°C to avoid solid CO_2 ("dry ice") formation. The vessel will not be depressurized below 10 bara to avoid the risk of dry ice formation at 6 bara and below.

CO_2 vented from the CO_2 surge drum is routed to the absorber stacks to mix with the exiting flue gases to ensure sufficient buoyancy to disperse the CO_2. Assuming a supercritical CO_2 volume of 20 m^3 (CO_2 surge drum ullage between NLL and LLL), depressurizing over 15 minutes results in a CO_2 vent flow of 8 kg/s, on the order of 1% of the flue gas flow. Under these conditions, the flue gas exit temperature should not be significantly reduced. Computational fluid dynamics (CFD) analysis should be conducted in the next project stage to confirm that this routing scheme is acceptable when the flue gas flow has stopped or if the CO_2 surge drum vents separately.

3.5 Exhaust, Emissions, and Waste

The PCC plant will employ a 35 wt% aqueous solution of MEA to capture CO_2 gas from the diverted flue gas stream of a combined cycle–natural gas fired turbine power plant. The plant is expected to generate airborne, liquid, and solid wastes under normal operating conditions.

3.5.1 Continuous Airborne Emissions

Predictable continuous airborne emissions are expected from each of the two absorber towers based on process simulations. Table 3-3 shows these streams, which are enumerated as 103/203 in the normal case HMB (26301-000-M4-CN-00001).

Table 3-3

Airborne Emissions (per absorber)

Component	ppm (vol)	kg/h
MEA	<6	14.4
NO	<2	2.4
NO_2	<1	0.4
Ammonia	10**	7.8**
Formaldehyde	<1*	*
Acetaldehyde	<1*	*
Piperazine	<1*	*
CO	<1*	*
CH_4	<1*	*

Notes:

1. For items marked with an asterisk (*), the effluent has not been quantified in the HMB but is expected in quantities less than 1 ppm at the vent stack outlet.
2. For items marked (**), the effluent is partially quantified in the HMB as the ammonia derived from the flue gas feed. Ammonia derived from amine degradation is also included in the quantity reported here.

Total airborne venting is simulated to 1,065,450 Sm^3/h (per absorber). The absorber towers are designed to vent all uncaptured gases to atmosphere through a circular vent stack. The remaining gas components not enumerated above, to be vented from the absorbers, include carbon dioxide, oxygen, nitrogen, water vapor, and argon. CO_2 from the product dryer associated with regeneration is returned to the main CO_2 inlet stream.

3.5.2 Fugitive Emissions

Under normal operating conditions for the plant, the process systems will function as closed designs. Where gaseous fugitive emissions occur from valves, pumps, blower, and compressor seals, the composition will be predominantly carbon dioxide, oxygen, nitrogen, water vapor, MEA, and argon.

3.5.3 Continuous Liquid Effluent

Liquid amine at any concentration is not intended for disposal in any sewer or bodies of water. In general, water generated from process condensers, coolers, intercoolers, and aftercoolers are recycled to the internal process systems.

Any contaminated process stream materials will be handled through the dedicated amine waste sump (MT-103) and either recycled (via Amine Waste Sump Pumps MP-112A/B) back to the process internally or pumped for disposal by road tanker to external facilities.

3.5.4 Infrequent Liquid Effluent

Under normal operating conditions for the plant, the process systems will function as closed designs. In case of accidental release, Table 3-4 shows the expected process components in a circulating process stream.

Table 3-4

Process Stream Composition Assessment

Component	wt%
MEA	34.30–37.55
CO_2	6.88–11.74
Water	48.22–50.47
Amine degradation products and HSS	5.1–5.74

See Doc. No. 26301-000-M5D-CN-00054 in Appendix G.

During system maintenance and unit turnarounds, it is expected that standard shutdown procedures will be maintained to ensure that all systems remain normally closed until all process chemicals normally in circulation are flushed to a closed system or sump safely. This may include water washing and steam-out.

3.5.5 Continuous Sludge Effluent

Process calculations based on available literature data (See Doc. No. 26301-000-M5D-CN-00054 in Appendix G) have quantified the expected amine reclaimer (MS-102) waste production at 354 kg/h for 6 days per week, resulting in 222 tonnes/month. [7] Based on a capacity factor of 65%, approximately 1,730 tonnes of waste is anticipated per year.

It is expected that the reclaimer will generate a continuous residue product (sludge) that will routinely require collection and removal as hazardous waste. The materials listed in Table 3-5 are estimated to be in the amine reclaimer sludge.

Table 3-5

Waste Stream Composition Assessment

Component	wt%
MEA	26.5
CO_2	0.0
Water	35.7
Thermally degraded amine	27.3
Neutralized HSS	10.5

Composition of the waste product will vary over time. The sludge will be pumped to tank trucks or trailers for disposal to an off-site industrial waste disposal facility.

FEED STUDY FOR CARBON CAPTURE PLANT RETROFIT

HEAT AND MATERIAL BALANCE

Normal Case - Reclaimer Off

Acknowledgment: *This material is based upon work supported by the Department of Energy Award Number DE-FE0031848.*

Disclaimer: *This report was prepared as an account of work sponsored by an agency of the United States Government. Neither the United States Government nor any agency thereof, nor any of their employees, makes any warranty, express or implied, or assumes any legal liability or responsibility for the accuracy, completeness, or usefulness of any information, apparatus, product, or process disclosed, or represents that its use would not infringe privately owned rights. Reference herein to any specific commercial product, process, or service by trade name, trademark, manufacturer, or otherwise does not necessarily constitute or imply its endorsement, recommendation, or favoring by the United States Government or any agency thereof. The views and opinions of authors expressed herein do not necessarily state or reflect those of the United States Government or any agency thereof.*

BECHTEL											Document Number		
											BECHTEL: 26301-000-M4-CN-00001		
		2	8-Jan-21	ISSUED FOR INFORMATION	MJC	VS	MJC/AGB				OWNER : NOT USED		
		1	10-Jul-20	ISSUED FOR INFORMATION	AAR	DT	MJC/ADB				Rev	Job Number	Page
		0	12-Jun-20	ISSUED FOR INFORMATION	AAR	DT	MJC/ADB						
		Rev	Date	Description	BY	CHKD	APPD				2	26301	1 of 11

Process Streams	001	002	003	004A	004B	005	006	007	008	009	010	011	012	Process Streams
	Flue Gas from CCPP	Flue Gas from Common Fogger	Process Water to Foggers	Process Water to MS-101A	Waste Water from MS-101A	Process Water to Abs. 1 Fogger	Abs.1 Flue Gas Blower Discharge	Process Water to Absorbers	Process Water to Abs. 2 Fogger	Abs.2 Flue Gas Blower Discharge	Softened Water	Softened Water to MT-102	Process Water to MT-102	
Mole Fraction	%	%	%			%	%	%	%	%	%			**Mole Fraction**
Oxygen	12.5400	12.1579	9.29743E-09	0	0	9.29743E-09	12.1579	9.29743E-09	9.29743E-09	12.1579	0	0	9.29743E-09	Oxygen
Nitrogen	75.1124	72.8237	8.24600E-09	0	0	8.24600E-09	72.8237	8.24600E-09	8.24600E-09	72.8237	0	0	8.24600E-09	Nitrogen
Water	7.62500	10.4374	99.9265	100	100	99.9265	10.4374	99.9265	99.9265	10.4374	100	100	99.9265	Water
Carbon Dioxide	3.86597	3.74977	0.0524764	0	0	0.0524764	3.74977	0.0524764	0.0524764	3.74977	0	0	0.052476	Carbon Dioxide
Sulfur Dioxide	3.00000E-05	2.90867E-05	2.69702E-08	0	0	2.69702E-08	2.90867E-05	2.69702E-08	2.69702E-08	2.90867E-05	0	0	2.69702E-08	Sulfur Dioxide
MEA	0	0.000484624	0.0159051	0	0	0.0159051	0.000484624	0.0159051	0.0159051	0.000484624	0	0	0.015905	MEA
Argon	0.855800	0.829724	7.18751E-10	0	0	7.18751E-10	0.829724	7.18751E-10	7.18751E-10	0.829724	0	0	7.18751E-10	Argon
NO	0.000180000	0.000174515	0	0	0	0	0.000174515	0	0	0.000174515	0	0	0.00000E+00	NO
NO2	2.00000E-05	1.93906E-05	8.41110E-10	0	0	8.41110E-10	1.93906E-05	8.41110E-10	8.41110E-10	1.93906E-05	0	0	8.41110E-10	NO2
NH3	0.000614000	0.000752578	0.00516205	0	0	0.00516205	0.000752578	0.00516205	0.00516205	0.000752578	0	0	5.16205E-03	NH3
Molar Flow	kmol/h	kmol/h	kmol/h	kmol/h	kmol/h	kmol/h	kmol/h	kmol/h	kmol/h	kmol/h	kmol/h	kmol/h	kmol/h	**Molar Flow**
Oxygen	11162.6	11162.6	5.67051E-08	0	0	2.83526E-08	5581.32	1.14729E-05	2.83526E-08	5581.32	0	0	1.14171E-05	Oxygen
Nitrogen	66862.0	66862.0	5.02924E-08	0	0	2.51462E-08	33431.0	1.89217E-05	2.51462E-08	33431.0	0	0	1.88722E-05	Nitrogen
Water	6787.47	9582.94	609.45	2800.71	0	304.726	4791.47	3597.180	304.726	4791.47	0	1063.643	2997.621	Water
Carbon Dioxide	3441.33	3442.79	0.32005	0	0	0.160027	1721.40	3.744252	0.160027	1721.40	0	0	3.429394	Carbon Dioxide
Sulfur Dioxide	0.0267048	0.0267055	1.64491E-07	0	0	8.22456E-08	0.0133528	9.73518E-07	8.22456E-08	0.0133528	0	0	8.11697E-07	Sulfur Dioxide
MEA	0	0.444950	0.097005	0	0	0.0485026	0.222475	0.5732553	0.0485026	0.222475	0	0	0.4778250	MEA
Argon	761.798	761.798	4.38367E-09	0	0	2.19183E-09	380.899	8.42270E-07	2.19183E-09	380.899	0	0	8.37958E-07	Argon
NO	0.160229	0.160229	0	0	0	0	0.0801143	3.50053E-10	0	0.0801143	0	0	3.50053E-10	NO
NO2	0.0178032	0.0178032	5.12994E-09	0	0	2.56497E-09	0.00890161	1.00663E-07	2.56497E-09	0.00890161	0	0	9.56160E-08	NO2
NH3	0.546558	0.690968	0.031483	0	0	0.0157417	0.345484	0.1860970	0.0157417	0.345484	0	0	0.1551247	NH3
Mass Fraction	%	%	%	%	%	%	%	%	%	%	%	%	%	**Mass Fraction**
Oxygen	14.0937	13.8186	1.64954E-08	0	0	1.64954E-08	13.8186	1.64954E-08	1.64954E-08	13.8186	0	0	1.64954E-08	Oxygen
Nitrogen	73.9043	72.4617	1.28078E-08	0	0	1.28078E-08	72.4617	1.28078E-08	1.28078E-08	72.4617	0	0	1.28078E-08	Nitrogen
Water	4.82474	6.67888	99.8132	100	100	99.8132	6.67888	99.8132	99.8132	6.67888	100	100	99.8132	Water
Carbon Dioxide	5.97581	5.86167	0.128049	0	0	0.128049	5.86167	0.128049	0.128049	5.86167	0	0	0.128049	Carbon Dioxide
Sulfur Dioxide	6.75035E-05	6.61878E-05	9.57994E-08	0	0	9.57994E-08	6.61878E-05	9.57994E-08	9.57994E-08	6.61878E-05	0	0	9.57994E-08	Sulfur Dioxide
MEA	0	0.00105147	0.0538670	0	0	0.0538670	0.00105147	0.0538670	0.0538670	0.00105147	0	0	0.0538670	MEA
Argon	1.20077	1.17733	1.59199E-09	0	0	1.59199E-09	1.17733	1.59199E-09	1.59199E-09	1.17733	0	0	1.59199E-09	Argon
NO	0.000189703	0.000186000	0	0	0	0	0.000186000	0	0	0.000186000	0	0	0	NO
NO2	3.23171E-05	3.16863E-05	2.14550E-09	0	0	2.14550E-09	3.16863E-05	2.14550E-09	2.14550E-09	3.16863E-05	0	0	2.14550E-09	NO2
NH3	0.000367273	0.000455250	0.00487435	0	0	0.00487435	0.000455250	0.00487435	0.00487435	0.000455250	0	0	0.00487435	NH3
Mass Flow	kg/h	kg/h	kg/h	kg/h	kg/h	kg/h	kg/h	kg/h	kg/h	kg/h	kg/h	kg/h	kg/h	**Mass Flow**
Oxygen	357191	357191	1.81450E-06	0	0	9.07248E-07	178595	3.67119E-04	9.07248E-07	178595	0	0	3.65333E-04	Oxygen
Nitrogen	1.87303E+06	1.87303E+06	1.40886E-06	0	0	7.04431E-07	936515	5.30061E-04	7.04431E-07	936515	0	0	5.28675E-04	Nitrogen
Water	122278	172639	10979.5	50455.6	0	5489.73	86319.7	64804.20	5489.73	86319.7	0	19154.7	54002.99	Water
Carbon Dioxide	151451	151516	14.0854	0	0	7.04271	75757.8	164.78267	7.04271	75757.8	0	0	150.92590	Carbon Dioxide
Sulfur Dioxide	1.71081	1.71086	1.05379E-05	0	0	5.26897E-06	0.855429	6.23673E-05	5.26897E-06	0.855429	0	0	5.20004E-05	Sulfur Dioxide
MEA	0	27.1789	5.9254	0	0	2.96269	13.5895	35.01620	2.96269	13.5895	0	0	29.18702	MEA
Argon	30432.3	30432.3	1.75119E-07	0	0	8.75594E-08	15216.2	3.36470E-05	8.75594E-08	15216.2	0	0	3.34747E-05	Argon
NO	4.80784	4.80784	0	0	0	0	2.40392	1.05037E-08	0	2.40392	0	0	1.05037E-08	NO
NO2	0.819045	0.819046	2.36005E-07	0	0	1.18003E-07	0.409523	4.63104E-06	1.18003E-07	0.409523	0	0	4.39886E-06	NO2
NH3	9.30816	11.7675	0.53618	0	0	0.268089	5.88377	3.169329	0.268089	5.88377	0	0	2.641855	NH3

Process Streams		001	002	003	004A	004B	005	006	007	008	009	010	011	012	Process Streams	
Property	Units														Property	Units
Temperature	°C	92.2222	47.8031	50.4803	50.4803	47.6000	50.4803	60.3867	48.2710	50.4803	60.3867	20	20	48.2710	Temperature	°C
Pressure	bara	0.9999	0.9999	138	138	0.9999	138	1.08677	4.13685	138	1.08677	4.13685	4.13685	4.13685	Pressure	bara
Mole Fraction Vapor	%	100	100	0	0	0	0	100	0	0	100	0	0	0	Mole Fraction Vapor	%
Molecular Weight	kg/kmol	28.4713	28.1533	18.0357	18.0153	18.0153	18.0357	28.1533	18.0357	18.0357	28.1533	18.0153	18.0153	18.0357	Molecular Weight	kg/kmol
Mass Density	kg/m³	0.937250	1.05558	989.440	989.440	988.387	989.440	1.10390	988.48963	989.440	1.10390	997.993	997.993	988.490	Mass Density	kg/m³
Molar Flow	kmol/h	89015.9	91813.5	609.90	2800.71	0.00	304.950	45906.7	3601.7	304.950	45906.7	0	1063.643	3001.68	Molar Flow	kmol/h
Mass Flow	kg/h	2.53440E+06	2.58486E+06	11000.0	50455.6	0.0	5500	1.29243E+06	65007	5500	1.29243E+06	0	19154.749	54185.74	Mass Flow	kg/h
Std Vapor Volumetric Flow	m³/h	2.10882E+06	2.17510E+06	14448.8	66350.0	0.0	7224.40	1.08755E+06	85325	7224.40	1.08755E+06	0	10722.653	71111.11	Std Vapor Volumetric Flow	m³/h
Std Liquid Volumetric Flow	m³/h	2966.42	3016.94	11.0142	50.5053	0.0000	5.50710	1508.47	65.11	5.50710	1508.47	0	8.162	54.27	Std Liquid Volumetric Flow	m³/h
Compressibility		0.999860	0.999359	0.0934845	0.0934845	0.0006830	0.0934845	0.999451	0.002824	0.0934845	0.999451	0.00306380	0.00306380	0.00282438	Compressibility	
Specific Gravity		0.983040	0.972062	0.990376	0.990376	0.989322	0.990376	0.972062	0.989424	0.990376	0.972062	0.998936	0.998936	0.989424	Specific Gravity	
Mass Enthalpy	kJ/kg	-1111.62	-1396.81	-15721.5	-15721.5	-15759.1	-15721.5	-1383.40	-15742.36	-15721.5	-1383.40	-15875.0	-15875.0	-15742.4	Mass Enthalpy	kJ/kg
Dynamic Viscosity	cP	0.0205928	0.0186380	0.569211	0.569211	0.581641	0.569211	0.0191798	0.5765649	0.569211	0.0191798	1.02225	1.02225	0.576565	Dynamic Viscosity	cP
Thermal Conductivity	W/(m°C)	0.0299343	0.0268832	0.6364664	0.6364664	0.6350193	0.6364664	0.0277585	0.6339444	0.6364664	0.0277585	0.5991149	0.5991149	0.633944	Thermal Conductivity	W/(m°C)
Surface Tension	dyn/cm			67.6974	67.6974	68.2585	67.6974		68.1218	67.6974		73.6591	73.6591	68.1218	Surface Tension	dyn/cm
Mass Cp	kJ/(kg°C)	1.05678	1.06710	4.14557	4.14557	4.17627	4.14557	1.06896	4.17184	4.14557	1.06896	4.18897	4.18897	4.17184	Mass Cp	kJ/(kg°C)

Process Streams	100	101	102	103	104	105	106	107	108	Process Streams
	Cooled Flue Gas to Abs. 1	Warm Wash Water (Abs.1)	Excess Water (Abs.1)	Off Gas to Atm. (Abs. 1)	Lean Amine (Abs.1)	Cooled Semi-Lean Amine (Abs.1)	Rich Amine (Abs.1)	Process Water to Wash Water Bed (Abs.1)	Cooled Wash Water to Wash Water Bed (Abs.1)	
Mole Fraction	%	%	%	%	%	%	%	%	%	**Mole Fraction**
Oxygen	12.0777	2.07194E-04	2.07194E-04	12.4099	1.03962E-05	4.54011E-07	1.95828E-04	9.29743E-09	2.07194E-04	Oxygen
Nitrogen	72.3431	6.65759E-04	6.65759E-04	74.3337	3.34051E-05	8.99286E-07	6.08757E-04	8.24600E-09	6.65759E-04	Nitrogen
Water	11.0279	99.3768	99.3768	11.8400	81.8657	78.5839	78.3040	99.9265	99.3768	Water
Carbon Dioxide	3.72537	0.165798	0.165798	0.568192	3.672281	6.479120	6.978922	0.052476	0.165798	Carbon Dioxide
Sulfur Dioxide	2.88950E-05	1.58578E-08	1.58578E-08	0	2.28614E-02	2.36810E-02	2.33292E-02	2.69702E-08	1.58578E-08	Sulfur Dioxide
MEA	0.000586383	0.455990	0.455990	0.000524889	14.438665	14.912629	14.692225	0.015905	0.455990	MEA
Argon	0.824249	1.48170E-05	1.48170E-05	0.846920	7.43460E-07	3.16897E-08	1.36274E-05	7.18751E-10	1.48170E-05	Argon
NO	0.000173364	4.38271E-09	4.38271E-09	0.000178131	2.19907E-10	0.00000E+00	4.02523E-09	0.00000E+00	4.38271E-09	NO
NO2	1.92627E-05	4.48128E-09	4.48128E-09	1.97879E-05	2.26824E-10	0.00000E+00	4.19242E-09	8.41110E-10	4.48128E-09	NO2
NH3	0.000781676	4.94888E-04	4.94888E-04	0.000603204	4.65459E-04	6.46194E-04	6.78335E-04	5.16205E-03	4.94888E-04	NH3
Molar Flow	kmol/h	kmol/h	kmol/h	kmol/h	kmol/h	kmol/h	kmol/h	kmol/h	kmol/h	**Molar Flow**
Oxygen	5581.32	0.154449	0.00457775	5581.21	0.00457776	4.83085E-05	0.105756	2.78923E-08	0.154449	Oxygen
Nitrogen	33431.0	0.496279	0.0147093	33430.7	0.0147093	9.56874E-05	0.328754	2.47380E-08	0.496279	Nitrogen
Water	5096.20	74078.8	2195.64	5324.89	36048.1	8361.62	42287.5	299.779	74078.8	Water
Carbon Dioxide	1721.56	123.591	3.66315	255.537	1617.02	689.403	3768.91	0.157429	123.591	Carbon Dioxide
Sulfur Dioxide	0.0133529	1.18209E-05	3.50363E-07	0	10.0666	2.51974	12.5987	8.09105E-08	1.18209E-05	Sulfur Dioxide
MEA	0.270977	339.910	10.0747	0.236062	6357.81	1586.76	7934.42	0.0477152	339.910	MEA
Argon	380.899	0.0110451	0.000327369	380.892	0.000327369	3.37190E-06	0.00735935	2.15625E-09	0.0110451	Argon
NO	0.0801143	3.26702E-06	9.68320E-08	0.0801122	9.68320E-08	0	2.17379E-06	0	3.26702E-06	NO
NO2	0.00890161	3.34049E-06	9.90098E-08	0.00889935	9.98779E-08	0	2.26408E-06	2.52333E-09	3.34049E-06	NO2
NH3	0.361226	0.368906	0.0109341	0.271284	0.204957	0.0687575	0.366329	0.0154861	0.368906	NH3
Mass Fraction	%	%	%	%	%	%	%	%	%	**Mass Fraction**
Oxygen	13.7600	0.000363188	0.000363188	14.4315	1.32016E-05	5.55920E-07	0.000239465	1.64954E-08	0.000363188	Oxygen
Nitrogen	72.1547	0.00102166	0.00102166	75.6766	3.71363E-05	9.63997E-07	0.000651691	1.28078E-08	0.00102166	Nitrogen
Water	7.07354	98.0726	98.0726	7.75179	58.5279	54.1735	53.9085	99.8132	98.0726	Water
Carbon Dioxide	5.83737	0.399712	0.399712	0.908765	6.41361	10.9113	11.7373	0.128049	0.399712	Carbon Dioxide
Sulfur Dioxide	6.59077E-05	5.56515E-08	5.56515E-08	0	0.0581214	0.0580529	0.0571142	9.57994E-08	5.56515E-08	Sulfur Dioxide
MEA	0.00127527	1.52580	1.52580	0.00116519	35	34.8568	34.2958	0.0538670	1.52580	MEA
Argon	1.17234	3.24248E-05	3.24248E-05	1.22955	1.17862E-06	4.84424E-08	2.08036E-05	1.59199E-09	3.24248E-05	Argon
NO	0.000185212	7.20401E-09	7.20401E-09	0.000194249	2.61859E-10	0	4.61564E-09	0	7.20401E-09	NO
NO2	3.15521E-05	1.12936E-08	1.12936E-08	3.30840E-05	4.14113E-10	0	7.37067E-09	2.14550E-09	1.12936E-08	NO2
NH3	0.000473976	0.000461696	0.000461696	0.000373338	0.000314579	0.000421117	0.000441473	0.00487435	0.000461696	NH3
Mass Flow	kg/h	kg/h	kg/h	kg/h	kg/h	kg/h	kg/h	kg/h	kg/h	**Mass Flow**
Oxygen	178595	4.94218	0.146483	178592	0.146483	0.00154581	3.38405	8.92520E-07	4.94218	Oxygen
Nitrogen	936515	13.9025	0.412058	936506	0.412059	0.00268053	9.20952	6.92995E-07	13.9025	Nitrogen
Water	91809.4	1.33455E+06	39555.0	95929.4	649417	150637	761821	5400.61	1.33455E+06	Water
Carbon Dioxide	75764.9	5439.19	161.213	11246.1	71164.4	30340.3	165868	6.92838	5439.19	Carbon Dioxide
Sulfur Dioxide	0.855434	0.000757294	2.24456E-05	0	644.906	161.424	807.123	5.18344E-06	0.000757294	Sulfur Dioxide
MEA	16.5521	20762.8	615.393	14.4194	388355	96924.2	484659	2.91459	20762.8	MEA
Argon	15216.2	0.441230	0.0130777	15215.9	0.0130778	0.000134701	0.293991	8.61380E-08	0.441230	Argon
NO	2.40392	9.80305E-05	2.90555E-06	2.40385	2.90555E-06	0	6.52270E-05	0	9.80305E-05	NO
NO2	0.409523	0.000153681	4.55499E-06	0.409419	4.59493E-06	0	0.000104160	1.16087E-07	0.000153681	NO2
NH3	6.15186	6.28266	0.186213	4.62010	3.49052	1.17098	6.23878	0.263737	6.28266	NH3

Process Streams		100	101	102	103	104	105	106	107	108	Process Streams	
Property	Units										Property	Units
Temperature	°C	50.9994	53.9469	53.9469	49.2902	49.0893	57.4027	52.0525	48.2710	37.6	Temperature	°C
Pressure	bara	1.08677	4.47915	4.47915	1.00677	3.98912	5.32780	1.08677	4.13685	3.44494	Pressure	bara
Mole Fraction Vapor	%	100	0	0	100	0	0	0	0	0	Mole Fraction Vapor	%
Molecular Weight	kg/kmol	28.0866	18.2549	18.2549	27.5163	25.1988	26.1329	26.1678	18.0357	18.2549	Molecular Weight	kg/kmol
Mass Density	kg/m³	1.13333	987.410	987.410	1.03394	1098.79	1150.53	1158.48	988.490	994.289	Mass Density	kg/m³
Molar Flow	kmol/h	46211.7	74543.3	2209.41	44973.8	44033.2	10640.4	54004.2	300	74543.3	Molar Flow	kmol/h
Mass Flow	kg/h	1.29793E+06	1.36078E+06	40332.4	1.23751E+06	1.10958E+06	278064	1.41317E+06	5410.72	1.36078E+06	Mass Flow	kg/h
Std Vapor Volumetric Flow	m³/h	1.09477E+06	1.76596E+06	52341.8	1.06545E+06	1.04317E+06	252075	1.27938E+06	7107.12	1.76596E+06	Std Vapor Volumetric Flow	m³/h
Std Liquid Volumetric Flow	m³/h	1513.98	1362.93	40.3961	1439.05	1118.67	283.151	1441.80	5.41770	1362.93	Std Liquid Volumetric Flow	m³/h
Compressibility		0.999311	0.00304485	0.00304485	0.999405	0.00341453	0.00440314	0.000907883	0.00282438	0.00244795	Compressibility	
Specific Gravity		0.969756	0.988343	0.988343	0.950066	1.09982	1.15162	1.15958	0.989424	0.995229	Specific Gravity	
Mass Enthalpy	kJ/kg	-1444.15	-15536.5	-15536.5	-1095.95	-11378.5	-11136.9	-11174.8	-15742.4	-15604.2	Mass Enthalpy	kJ/kg
Dynamic Viscosity	cP	0.0187568	0.537737	0.537737	0.0187657	2.09466	2.31791	2.70503	0.576565	0.724365	Dynamic Viscosity	cP
Thermal Conductivity	W/(m*°C)	0.0271029	0.6288228	0.6288228	0.0272277	0.408973	0.381428	0.375653	0.633944	0.610790	Thermal Conductivity	W/(m*°C)
Surface Tension	dyn/cm		66.7730	66.7730		59.8497	93.9787	96.4522	68.1218	69.8935	Surface Tension	dyn/cm
Mass Cp	kJ/(kg*°C)	1.07122	4.13762	4.13762	1.08391	3.34907	3.19649	3.17036	4.17184	4.13573	Mass Cp	kJ/(kg*°C)

Process Streams	200	201	202	203	204	205	206	207	208	Process Streams
	Cooled Flue Gas to Abs. 2	Warm Wash Water (Abs.2)	Excess Water (Abs.2)	Off Gas to Atm. (Abs. 2)	Lean Amine (Abs.2)	Cooled Semi-Lean Amine (Abs.2)	Rich Amine (Abs.2)	Process Water to Wash Water Bed (Abs.2)	Cooled Wash Water to Wash Water Bed (Abs.2)	
Mole Fraction	%	%	%	%	%	%	%	%	%	**Mole Fraction**
Oxygen	12.0777	2.07194E-04	2.07194E-04	12.4099	1.03962E-05	4.54011E-07	1.95828E-04	9.29743E-09	2.07194E-04	Oxygen
Nitrogen	72.3431	6.65759E-04	6.65759E-04	74.3337	3.34051E-05	8.99286E-07	6.08757E-04	8.24600E-09	6.65759E-04	Nitrogen
Water	11.0279	99.3768	99.3768	11.8400	81.8657	78.5839	78.3040	99.9265	99.3768	Water
Carbon Dioxide	3.72537	0.165798	0.165798	0.568192	3.672281	6.479120	6.978922	0.052476	0.165798	Carbon Dioxide
Sulfur Dioxide	2.88950E-05	1.58578E-08	1.58578E-08	0	2.28614E-02	2.36810E-02	2.33292E-02	2.69702E-08	1.58578E-08	Sulfur Dioxide
MEA	0.000586383	0.455990	0.455990	0.000524889	14.438665	14.912629	14.692225	0.015905	0.455990	MEA
Argon	0.824249	1.48170E-05	1.48170E-05	0.846920	7.43460E-07	3.16897E-08	1.36274E-05	7.18751E-10	1.48170E-05	Argon
NO	0.000173364	4.38271E-09	4.38271E-09	0.000178131	2.19907E-10	0.00000E+00	4.02523E-09	0.00000E+00	4.38271E-09	NO
NO2	1.92627E-05	4.48128E-09	4.48128E-09	1.97879E-05	2.26824E-10	0.00000E+00	4.19242E-09	8.41110E-10	4.48128E-09	NO2
NH3	0.000781676	4.94888E-04	4.94888E-04	0.000603204	4.65459E-04	6.46194E-04	6.78335E-04	5.16205E-03	4.94888E-04	NH3
Molar Flow	kmol/h	kmol/h	kmol/h	kmol/h	kmol/h	kmol/h	kmol/h	kmol/h	kmol/h	**Molar Flow**
Oxygen	5581.32	0.154449	0.00457775	5581.21	0.00457776	4.83085E-05	0.105756	2.78923E-08	0.154449	Oxygen
Nitrogen	33431.0	0.496279	0.0147093	33430.7	0.0147093	9.56874E-05	0.328754	2.47380E-08	0.496279	Nitrogen
Water	5096.20	74078.8	2195.64	5324.89	36048.1	8361.62	42287.5	299.779	74078.8	Water
Carbon Dioxide	1721.56	123.591	3.66315	255.537	1617.02	689.403	3768.91	0.157429	123.591	Carbon Dioxide
Sulfur Dioxide	0.0133529	1.18209E-05	3.50363E-07	0	10.0666	2.51974	12.5987	8.09105E-08	1.18209E-05	Sulfur Dioxide
MEA	0.270977	339.910	10.0747	0.236062	6357.81	1586.76	7934.42	0.0477152	339.910	MEA
Argon	380.899	0.0110451	0.000327369	380.892	0.000327369	3.37190E-06	0.00735935	2.15625E-09	0.0110451	Argon
NO	0.0801143	3.26702E-06	9.68320E-08	0.0801122	9.68320E-08	0	2.17379E-06	0	3.26702E-06	NO
NO2	0.00890161	3.34049E-06	9.90098E-08	0.00889935	9.98779E-08	0	2.26408E-06	2.52333E-09	3.34049E-06	NO2
NH3	0.361226	0.368906	0.0109341	0.271284	0.204957	0.0687575	0.366329	0.0154861	0.368906	NH3
Mass Fraction	%	%	%	%	%	%	%	%	%	**Mass Fraction**
Oxygen	13.7600	0.000363188	0.000363188	14.4315	1.32016E-05	5.55920E-07	0.000239465	1.64954E-08	0.000363188	Oxygen
Nitrogen	72.1547	0.00102166	0.00102166	75.6766	3.71363E-05	9.63997E-07	0.000651691	1.28078E-08	0.00102166	Nitrogen
Water	7.07354	98.0726	98.0726	7.75179	58.5279	54.1735	53.9085	99.8132	98.0726	Water
Carbon Dioxide	5.83737	0.399712	0.399712	0.908765	6.41361	10.9113	11.7373	0.128049	0.399712	Carbon Dioxide
Sulfur Dioxide	6.59077E-05	5.56515E-08	5.56515E-08	0	0.0581214	0.0580529	0.0571142	9.57994E-08	5.56515E-08	Sulfur Dioxide
MEA	0.00127527	1.52580	1.52580	0.00116519	35	34.8568	34.2958	0.0538670	1.52580	MEA
Argon	1.17234	3.24248E-05	3.24248E-05	1.22955	1.17862E-06	4.84424E-08	2.08036E-05	1.59199E-09	3.24248E-05	Argon
NO	0.000185212	7.20401E-09	7.20401E-09	0.000194249	2.61859E-10	0	4.61564E-09	0	7.20401E-09	NO
NO2	3.15521E-05	1.12936E-08	1.12936E-08	3.30840E-05	4.14113E-10	0	7.37067E-09	2.14550E-09	1.12936E-08	NO2
NH3	0.000473976	0.000461696	0.000461696	0.000373338	0.000314579	0.000421117	0.000441473	0.00487435	0.000461696	NH3
Mass Flow	kg/h	kg/h	kg/h	kg/h	kg/h	kg/h	kg/h	kg/h	kg/h	**Mass Flow**
Oxygen	178595	4.94218	0.146483	178592	0.146483	0.00154581	3.38405	8.92520E-07	4.94218	Oxygen
Nitrogen	936515	13.9025	0.412058	936506	0.412059	0.00268053	9.20952	6.92995E-07	13.9025	Nitrogen
Water	91809.4	1.33455E+06	39555.0	95929.4	649417	150637	761821	5400.61	1.33455E+06	Water
Carbon Dioxide	75764.9	5439.19	161.213	11246.1	71164.4	30340.3	165868	6.92838	5439.19	Carbon Dioxide
Sulfur Dioxide	0.855434	0.000757294	2.24456E-05	0	644.906	161.424	807.123	5.18344E-06	0.000757294	Sulfur Dioxide
MEA	16.5521	20762.8	615.393	14.4194	388355	96924.2	484659	2.91459	20762.8	MEA
Argon	15216.2	0.441230	0.0130777	15215.9	0.0130778	0.000134701	0.293991	8.61380E-08	0.441230	Argon
NO	2.40392	9.80305E-05	2.90555E-06	2.40385	2.90555E-06	0	6.52270E-05	0	9.80305E-05	NO
NO2	0.409523	0.000153681	4.55499E-06	0.409419	4.59493E-06	0	0.000104160	1.16087E-07	0.000153681	NO2
NH3	6.15186	6.28266	0.186213	4.62010	3.49052	1.17098	6.23878	0.263737	6.28266	NH3

Process Streams		200	201	202	203	204	205	206	207	208	Process Streams	
Property	Units										Property	Units
Temperature	°C	50.9994	53.9469	53.9469	49.2902	49.0893	57.4027	52.0525	48.2710	37.6	Temperature	°C
Pressure	bara	1.08677	4.47915	4.47915	1.00677	3.98912	5.32780	1.08677	4.13685	3.44494	Pressure	bara
Mole Fraction Vapor	%	100	0	0	100	0	0	0	0	0	Mole Fraction Vapor	%
Molecular Weight	kg/kmol	28.0866	18.2549	18.2549	27.5163	25.1988	26.1329	26.1678	18.0357	18.2549	Molecular Weight	kg/kmol
Mass Density	kg/m³	1.13333	987.410	987.410	1.03394	1098.79	1150.53	1158.48	988.490	994.289	Mass Density	kg/m³
Molar Flow	kmol/h	46211.7	74543.3	2209.41	44973.8	44033.2	10640.4	54004.2	300	74543.3	Molar Flow	kmol/h
Mass Flow	kg/h	1.29793E+06	1.36078E+06	40332.4	1.23751E+06	1.10958E+06	278064	1.41317E+06	5410.72	1.36078E+06	Mass Flow	kg/h
Std Vapor Volumetric Flow	m³/h	1.09477E+06	1.76596E+06	52341.8	1.06545E+06	1.04317E+06	252075	1.27938E+06	7107.12	1.76596E+06	Std Vapor Volumetric Flow	m³/h
Std Liquid Volumetric Flow	m³/h	1513.98	1362.93	40.3961	1439.05	1118.67	283.151	1441.80	5.41770	1362.93	Std Liquid Volumetric Flow	m³/h
Compressibility		0.999311	0.00304485	0.00304485	0.999405	0.00341453	0.00440314	0.000907883	0.00282438	0.00244795	Compressibility	
Specific Gravity		0.969756	0.988343	0.988343	0.950066	1.09982	1.15162	1.15958	0.989424	0.995229	Specific Gravity	
Mass Enthalpy	kJ/kg	-1444.15	-15536.5	-15536.5	-1095.95	-11378.5	-11136.9	-11174.8	-15742.4	-15604.2	Mass Enthalpy	kJ/kg
Dynamic Viscosity	cP	0.0187568	0.537737	0.537737	0.0187657	2.09466	2.31791	2.70503	0.576565	0.724365	Dynamic Viscosity	cP
Thermal Conductivity	W/(m*°C)	0.027103	0.628823	0.628823	0.027228	0.408973	0.381428	0.375653	0.633944	0.610790	Thermal Conductivity	W/(m*°C)
Surface Tension	dyn/cm		66.7730	66.7730		59.8497	93.9787	96.4522	68.1218	69.8935	Surface Tension	dyn/cm
Mass Cp	kJ/(kg*°C)	1.07122	4.13762	4.13762	1.08391	3.34907	3.19649	3.17036	4.17184	4.13573	Mass Cp	kJ/(kg*°C)

Process Streams	300	302	303	304	305	306	307	308	309	310	311	Process Streams
	Combined Cold Rich Amine	Hot Rich Amine	Lean Amine from ME-107	Rich Amine to ME-103	Lean Amine to Absorbers	ME-107 Lean Amine Bypass	Fresh Amine	Lean Amine to ME-108	Rich Amine to ME-107	Rich Amine to ME-109	Rich Amine to V-201	
Mole Fraction	%	%	%	%	%	%	%	%	%	%	%	**Mole Fraction**
Oxygen	1.95828E-04	0.000195828	0	0.000195828	0.000010396	0	0	0	0.000195828	0.000195828	0.000195828	Oxygen
Nitrogen	6.08757E-04	0.000608757	0	0.000608757	0.000033405	0	0	0	0.000608757	0.000608757	0.000608757	Nitrogen
Water	78.3040	78.3040	79.9666	78.3040	81.8657	79.9666	0	79.9666	78.3040	78.3040	78.3040	Water
Carbon Dioxide	6.978922	6.97892	4.05473	6.97892	3.67228	4.05473	0	4.05473	6.97892	6.97892	6.97892	Carbon Dioxide
Sulfur Dioxide	2.33292E-02	0.0233292	0.0253317	0.0233292	0.0228614	0.0253317	0	0.0253317	0.0233292	0.0233292	0.0233292	Sulfur Dioxide
MEA	14.692225	14.6922	15.9529	14.6922	14.4387	15.9529	100.0000	15.9529	14.6922	14.6922	14.6922	MEA
Argon	1.36274E-05	1.36274E-05	0	1.36274E-05	7.43460E-07	0	0	0	1.36274E-05	1.36274E-05	1.36274E-05	Argon
NO	4.02523E-09	4.02523E-09	0	4.02523E-09	2.19907E-10	0	0	0	4.02523E-09	4.02523E-09	4.02523E-09	NO
NO2	4.19242E-09	4.19242E-09	0	4.19242E-09	2.26824E-10	0	0	0	4.19242E-09	4.19242E-09	4.19242E-09	NO2
NH3	6.78335E-04	0.000678335	0.000474255	0.000678335	0.000465459	0.000474255	0	0.000474255	0.000678335	0.000678335	0.000678335	NH3
Molar Flow	kmol/h	kmol/h	kmol/h	kmol/h	kmol/h	kmol/h	kmol/h	kmol/h	kmol/h	kmol/h	kmol/h	**Molar Flow**
Oxygen	0.211511	0.169209	0	0.0423022	0.0091555	0	0	0	0.0423022	0.0423022	0.0423022	Oxygen
Nitrogen	0.657508	0.526007	0	0.131502	0.029419	0	0	0	0.131502	0.131502	0.131502	Nitrogen
Water	84574.9	67659.9	12726.9	16915.0	72096.2	50907.4	0	63634.3	16915.0	16915.0	16915.0	Water
Carbon Dioxide	7537.82	6030.26	645.318	1507.56	3234.05	2581.27	0	3226.59	1507.56	1507.56	1507.56	Carbon Dioxide
Sulfur Dioxide	25.1975	20.1580	4.03160	5.03949	20.13325	16.1264	0	20.1580	5.03949	5.03949	5.03949	Sulfur Dioxide
MEA	15868.8	12695.1	2538.93	3173.77	12715.62	10155.7	0.799258	12694.6	3173.77	3173.77	3173.77	MEA
Argon	0.0147187	0.0117750	0	0.00294374	0.00065474	0	0	0	0.00294374	0.00294374	0.00294374	Argon
NO	4.34758E-06	3.47807E-06	0	8.69516E-07	1.93664E-07	0	0	0	8.69516E-07	8.69516E-07	8.69516E-07	NO
NO2	4.52817E-06	3.62253E-06	0	9.05634E-07	1.99756E-07	0	0	0	9.05634E-07	9.05634E-07	9.05634E-07	NO2
NH3	0.732659	0.586127	0.0754788	0.146532	0.409914	0.301915	0	0.377394	0.146532	0.146532	0.146532	NH3
Mass Fraction	%	%	%	%	%	%	%	%	%	%	%	**Mass Fraction**
Oxygen	0.000239465	0.000239465	0	0.000239465	0.000013202	0	0	0	0.000239465	0.000239465	0.000239465	Oxygen
Nitrogen	0.000651691	0.000651691	0	0.000651691	0.000037136	0	0	0	0.000651691	0.000651691	0.000651691	Nitrogen
Water	53.9085	53.9085	55.5121	53.9085	58.5279	55.5121	0	55.5121	53.9085	53.9085	53.9085	Water
Carbon Dioxide	11.7373	11.7373	6.87616	11.7373	6.4136	6.87616	0	6.87616	11.7373	11.7373	11.7373	Carbon Dioxide
Sulfur Dioxide	0.0571142	0.0571142	0.0625339	0.0571142	0.0581214	0.0625339	0	0.0625339	0.0571142	0.0571142	0.0571142	Sulfur Dioxide
MEA	34.2958	34.2958	37.5489	34.2958	35.0000	37.5489	100	37.5489	34.2958	34.2958	34.2958	MEA
Argon	2.08036E-05	2.08036E-05	0	2.08036E-05	1.17862E-06	0	0	0	2.08036E-05	2.08036E-05	2.08036E-05	Argon
NO	4.61564E-09	4.61564E-09	0	4.61564E-09	2.61859E-10	0	0	0	4.61564E-09	4.61564E-09	4.61564E-09	NO
NO2	7.37067E-09	7.37067E-09	0	7.37067E-09	4.14113E-10	0	0	0	7.37067E-09	7.37067E-09	7.37067E-09	NO2
NH3	0.000441473	0.000441473	0.000311228	0.000441473	0.000314579	0.000311228	0	0.000311228	0.000441473	0.000441473	0.000441473	NH3
Mass Flow	kg/h	kg/h	kg/h	kg/h	kg/h	kg/h	kg/h	kg/h	kg/h	kg/h	kg/h	**Mass Flow**
Oxygen	6.76810	5.41448	0	1.35362	0.29297	0	0	0	1.35362	1.35362	1.35362	Oxygen
Nitrogen	18.4190	14.7352	0	3.68381	0.82412	0	0	0	3.68381	3.68381	3.68381	Nitrogen
Water	1.52364E+06	1.21891E+06	229278	304728	1298833	917111	0	1.14639E+06	304728	304728	304728	Water
Carbon Dioxide	331736	265389	28400.1	66347.2	142328.8	113600	0	142001	66347.2	66347.2	66347.2	Carbon Dioxide
Sulfur Dioxide	1614.25	1291.40	258.279	322.849	1289.813	1033.12	0	1291.40	322.849	322.849	322.849	Sulfur Dioxide
MEA	969318	775454	155086	193864	776709	620343	48.8212	775428	193864	193864	193864	MEA
Argon	0.587983	0.470386	0	0.117597	0.026156	0	0	0	0.117597	0.117597	0.117597	Argon
NO	0.000130454	0.000104363	0	2.60908E-05	5.81110E-06	0	0	0	2.60908E-05	2.60908E-05	2.60908E-05	NO
NO2	0.000208321	0.000166657	0	4.16641E-05	9.18986E-06	0	0	0	4.16641E-05	4.16641E-05	4.16641E-05	NO2
NH3	12.4776	9.98205	1.28544	2.49551	6.98104	5.14177	0	6.42721	2.49551	2.49551	2.49551	NH3

Process Streams		300	302	303	304	305	306	307	308	309	310	311	Process Streams	
Property	Units												Property	Units
Temperature	°C	52.2015	120.7*	126.077	52.2015	49.0893	131.079	48.8889*	130.094	109.5*	113.311	122.8*	Temperature	°C
Pressure	bara	10.7394	9.70522	5.71280	10.7394	57.8572	6.40228	8.6049*	5.71280	9.70522	8.67101	7.63679	Pressure	bara
Mole Fraction Vapor	%	0	0	0	0	0	0	0	0	0	0	0	Mole Fraction Vapor	%
Molecular Weight	kg/kmol	26.1678	26.1678	25.9515	26.1678	25.1988	25.9515	61.0831	25.9515	26.1678	26.1678	26.1678	Molecular Weight	kg/kmol
Mass Density	kg/m³	1158.55	1138.03	1079.46	1158.55	1098.79	1076.58	993.667	1077.14	1142.55	1141.05	1137.12	Mass Density	kg/m³
Molar Flow	kmol/h	108008	86406.7	15915.2	21601.7	88066.5	63660.8	0.799258	79576.0	21601.7	21601.7	21601.7	Molar Flow	kmol/h
Mass Flow	kg/h	2.82635E+06	2.26108E+06	413023	565269	2219169	1.65209E+06	48.8212	2.06512E+06	565269	565269	565269	Mass Flow	kg/h
Std Vapor Volumetric Flow	m³/h	2.55876E+06	2.04701E+06	377038	511753	2086330	1.50815E+06	18.9348	1.88519E+06	511753	511753	511753	Std Vapor Volumetric Flow	m³/h
Std Liquid Volumetric Flow	m³/h	2883.61	2306.89	416.619	576.722	9850.752	1666.48	0.0478938	2083.10	576.722	576.722	576.722	Std Liquid Volumetric Flow	m³/h
Compressibility		0.00896698	0.00681480	0.00413761	0.00896698	0.00341453	0.00459186	0.0197553	0.00410521	0.00698655	0.00618863	0.00533825	Compressibility	
Specific Gravity		1.15965	1.13911	1.08048	1.15965	1.09982	1.07760	0.994606	1.07816	1.14363	1.14213	1.13819	Specific Gravity	
Mass Enthalpy	kJ/kg	-11173.5	-10946.2	-10797.3	-11173.5	-11378.5	-10779.4	-4315.19	-10783.0	-10985.3	-10972.2	-10939.0	Mass Enthalpy	kJ/kg
Dynamic Viscosity	cP	2.70208	0.688547	0.553913	2.70208	2.09466	0.516574	7.17192	0.523513	0.821676	0.772138	0.666704	Dynamic Viscosity	cP
Thermal Conductivity	W/(m*°C)	0.376282	0.389675	0.409238	0.376282	0.408973	0.408818	0.240295	0.408893	0.389386	0.389504	0.389529	Thermal Conductivity	W/(m*°C)
Surface Tension	dyn/cm	93.8928	87.7582	46.4302	93.8928	59.8497	45.5499	45.6798	45.7238	89.1755	88.9551	87.9765	Surface Tension	dyn/cm
Mass Cp	kJ/(kg*°C)	3.17010	3.53064	3.55653	3.17010	3.34907	3.58235	4.19824	3.57715	3.44143	3.46976	3.54939	Mass Cp	kJ/(kg*°C)

Process Streams	312	313	314	315	316	317	318	319	320	322	323	Process Streams
	Flash Gas	Semi-Lean Amine to ME-103	Stripper Bottoms	Lean Amine to ME-107/ME-108	Reclaimer Feed	Reclaimer Product	Stripper Reboiler Inlet	Stripper Reboiler Vapor Return	Stripper Overhead	Stripper Reflux	Reflux Purge	
Mole Fraction	%	%	%	%	%	%	%	%	%	%	%	**Mole Fraction**
Oxygen	0.0131510	4.54011E-07	0	0	-	-	0	0	0.00278133	2.48070E-07	2.48070E-07	Oxygen
Nitrogen	0.0409154	8.99286E-07	0	0	-	-	0	0	0.00864752	4.09606E-07	4.09606E-07	Nitrogen
Water	59.7443	78.5839	79.9666	79.9666	-	-	81.5055	81.5055	61.3917	99.8869	99.8869	Water
Carbon Dioxide	40.1205	6.47912	4.05473	4.05473	-	-	4.28813	4.28813	38.5837	0.0911250	0.0911250	Carbon Dioxide
Sulfur Dioxide	2.93114E-06	0.0236810	0.0253317	0.0253317	-	-	0.0224309	2.24309E-02	1.66839E-08	2.81178E-08	2.81178E-08	Sulfur Dioxide
MEA	0.0773969	14.9126	15.9529	15.9529	-	-	14.1829	14.182872	0.00979753	0.0165608	0.0165608	MEA
Argon	0.000915148	3.16897E-08	0	0	-	-	0	0	0.000193548	1.82019E-08	1.82019E-08	Argon
NO	2.69980E-07	1.44023E-11	0	0	-	-	0	0	5.71554E-08	7.53350E-12	7.53350E-12	NO
NO2	2.76961E-07	7.88511E-11	0	0	-	-	0	0	5.93507E-08	7.45025E-11	7.45025E-11	NO2
NH3	0.00280957	0.000646194	0.000474255	0.000474255	-	-	0.00103762	0.00103762	0.00318290	0.00537407	0.00537407	NH3
Molar Flow	kmol/h	kmol/h	kmol/h	kmol/h	kmol/h	kmol/h	kmol/h	kmol/h	kmol/h	kmol/h	kmol/h	**Molar Flow**
Oxygen	0.0422056	9.66169E-05	0	0	-	-	0	0	0.211416	1.11556E-06	1.00401E-05	Oxygen
Nitrogen	0.131310	0.000191375	0	0	-	-	0	0	0.657319	1.84198E-06	1.65778E-05	Nitrogen
Water	191.738	16723.2	63634.3	63634.3	-	-	73247.7	73247.68	4666.53	449.188	4042.69	Water
Carbon Dioxide	128.759	1378.81	3226.59	3226.59	-	-	3853.67	3853.668	2932.84	0.409786	3.68807	Carbon Dioxide
Sulfur Dioxide	9.40696E-06	5.03948	20.1580	20.1580	-	-	20.1583	20.158266666	1.26819E-06	1.26445E-07	1.13800E-06	Sulfur Dioxide
MEA	0.248391	3173.52	12694.6	12694.6	-	-	12745.9	12745.9135	0.744734	0.0744733	0.670260	MEA
Argon	0.00293700	6.74381E-06	0	0	-	-	0	0	0.0147120	8.18531E-08	7.36678E-07	Argon
NO	8.66451E-07	3.06492E-09	0	0	-	-	0	0	4.34452E-06	3.38779E-11	3.04901E-10	NO
NO2	8.88854E-07	1.67801E-08	0	0	-	-	0	0	4.51139E-06	3.35035E-10	3.01531E-09	NO2
NH3	0.00901681	0.137515	0.377394	0.377394	-	-	0.932496	0.932496	0.241940	0.0241670	0.217503	NH3
Mass Fraction	%	%	%	%	%	%	%	%	%	%	%	**Mass Fraction**
Oxygen	0.0147739	5.55920E-07	0	0	-	-	0	0	0.00317284	4.39872E-07	4.39872E-07	Oxygen
Nitrogen	0.0402398	9.63997E-07	0	0	-	-	0	0	0.00863615	6.35843E-07	6.35843E-07	Nitrogen
Water	37.7869	54.1735	55.5121	55.5121	-	-	58.1557	58.1557	39.4288	99.7166	99.7166	Water
Carbon Dioxide	61.9892	10.9113	6.87616	6.87616	-	-	7.47443	7.4744	60.5358	0.222230	0.222230	Carbon Dioxide
Sulfur Dioxide	6.59254E-06	0.0580529	0.0625339	0.0625339	-	-	0.0569145	5.69145E-02	3.81043E-08	9.98187E-08	9.98187E-08	Sulfur Dioxide
MEA	0.165977	34.8568	37.5489	37.5489	-	-	34.3123	34.31226	0.0213354	0.0560557	0.0560557	MEA
Argon	0.00128348	4.84424E-08	0	0	-	-	0	0	0.000275643	4.02929E-08	4.02929E-08	Argon
NO	2.84410E-07	1.65369E-11	0	0	-	-	0	0	6.11405E-08	1.25263E-11	1.25263E-11	NO
NO2	4.47333E-07	1.38813E-10	0	0	-	-	0	0	9.73415E-08	1.89932E-10	1.89932E-10	NO2
NH3	0.00167985	0.000421117	0.000311228	0.000311228	-	-	0.000699894	0.00069989	0.00193247	0.00507165	0.00507165	NH3
Mass Flow	kg/h	kg/h	kg/h	kg/h	kg/h	kg/h	kg/h	kg/h	kg/h	kg/h	kg/h	**Mass Flow**
Oxygen	1.35053	0.00309163	0	0	-	-	0	0	6.76504	3.56967E-05	0.000321270	Oxygen
Nitrogen	3.67845	0.00536106	0	0	-	-	0	0	18.4137	5.16002E-05	0.000464402	Nitrogen
Water	3454.22	301274	1.14639E+06	1.14639E+06	-	-	1.31958E+06	1319577	84068.9	8092.25	72830.2	Water
Carbon Dioxide	5666.63	60680.5	142001	142001	-	-	169598	169598.0	129073	18.0345	162.310	Carbon Dioxide
Sulfur Dioxide	0.000602645	322.848	1291.40	1291.40	-	-	1291.42	1291.4151641	8.12449E-05	8.10053E-06	7.29047E-05	Sulfur Dioxide
MEA	15.1725	193848	775428	775428	-	-	778560	778559.66	45.4906	4.54906	40.9415	MEA
Argon	0.117327	0.000269402	0	0	-	-	0	0	0.587717	3.26987E-06	2.94288E-05	Argon
NO	2.59988E-05	9.19663E-08	0	0	-	-	0	0	0.000130362	1.01654E-09	9.14889E-09	NO
NO2	4.08922E-05	7.71977E-07	0	0	-	-	0	0	0.000207549	1.54135E-08	1.38721E-07	NO2
NH3	0.153561	2.34195	6.42721	6.42721	-	-	15.8809	15.88090	4.12036	0.411576	3.70419	NH3

Process Streams		312	313	314	315	316	317	318	319	320	322	323	Process Streams	
Property	**Units**												**Property**	**Units**
Temperature	°C	115.025	115.080	131.010	131.079	-	-	128.439	131.010	109.300	48.7916	48.7916	Temperature	°C
Pressure	bara	2.5699*	6.01728	2.61016	6.40228	-	-	2.61016	2.61026	2.26543	5.54044	5.54044	Pressure	bara
Mole Fraction Vapor	%	100	0	0	0	-	-	0	11.45265085	100	0	0	Mole Fraction Vapor	%
Molecular Weight	kg/kmol	28.4837	26.1329	25.9515	25.9515	-	-	25.2485	25.2485	28.0503	18.0460	18.0460	Molecular Weight	kg/kmol
Mass Density	kg/m³	2.29575	1132.30	1076.56	1076.58	-	-	1075.64	17.16745	2.02126	988.472	988.472	Mass Density	kg/m³
Molar Flow	kmol/h	320.932	21280.7	79576.0	79576.0	-	-	89868.4	89868.4	7601.24	449.696	4047.27	Molar Flow	kmol/h
Mass Flow	kg/h	9141.33	556128	2.06512E+06	2.06512E+06	-	-	2.26904E+06	2269042	213217	8115.24	73037.2	Mass Flow	kg/h
Std Vapor Volumetric Flow	m³/h	7603.00	504150	1.88519E+06	1.88519E+06	-	-	2.12902E+06	2129018	180077	10653.5	95881.4	Std Vapor Volumetric Flow	m³/h
Std Liquid Volumetric Flow	m³/h	10.4199	566.302	2083.10	2083.10	-	-	2293.35	2293.346	242.339	8.12743	73.1469	Std Liquid Volumetric Flow	m³/h
Compressibility		0.987933	0.00430233	0.00187242	0.00459186	-	-	0.00183494	0.114238	0.988681	0.00377877	0.00377877	Compressibility	
Specific Gravity		0.983469	1.13337	1.07758	1.07760	-	-	1.07665		0.968504	0.989406	0.989406	Specific Gravity	
Mass Enthalpy	kJ/kg	-10510.2	-10945.5	-10780.0	-10779.4	-	-	-11131.9	-10932.9	-10601.8	-15733.7	-15733.7	Mass Enthalpy	kJ/kg
Dynamic Viscosity	cP	0.0169990	0.735706	0.516408	0.516574	-	-	0.489595		0.0166562	0.570639	0.570639	Dynamic Viscosity	cP
Thermal Conductivity	W/(m*°C)	0.0258446	0.392766	0.408676	0.408818	-	-	0.419666		0.0254131	0.633574	0.633574	Thermal Conductivity	W/(m*°C)
Surface Tension	dyn/cm		88.0537	45.5620	45.5499	-	-	46.3255			67.9951	67.9951	Surface Tension	dyn/cm
Mass Cp	kJ/(kg*°C)	1.32074	3.47190	3.58211	3.58235	-	-	3.59339	3.42502	1.32874	4.17165	4.17165	Mass Cp	kJ/(kg*°C)

Process Streams	324	325	330	332	333	334	Process Streams
	Cooled Stripper Overhead	Stripper Overhead Liquid	Semi-Lean Amine from V-201	Rich Amine to ME-108	Lean Amine to Absorbers	Lean Amine to ME-102	
Mole Fraction	%	%	%	%	%	%	**Mole Fraction**
Oxygen	0.00278133	2.48070E-07	4.54011E-07	0.000195828	1.01255E-08	0	Oxygen
Nitrogen	0.00864752	4.09606E-07	8.99286E-07	0.000608757	9.00881E-09	0	Nitrogen
Water	61.3917	99.8869	78.5839	78.3040	99.8965	79.9666	Water
Carbon Dioxide	38.5837	0.0911250	6.47912	6.97892	0.057229	4.05473	Carbon Dioxide
Sulfur Dioxide	1.66839E-08	2.81178E-08	0.0236810	0.0233292	7.85897E-08	0.0253317	Sulfur Dioxide
MEA	0.00979753	0.0165608	14.9126	14.6922	0.043704	15.9529	MEA
Argon	0.000193548	1.82019E-08	3.16897E-08	1.36274E-05	8.04663E-10	0	Argon
NO	5.71554E-08	7.53350E-12	1.44023E-11	4.02523E-09	0.00000E+00	0	NO
NO2	5.93507E-08	7.45025E-11	7.88511E-11	4.19242E-09	4.65218E-09	0	NO2
NH3	0.00318290	0.00537407	0.000646194	0.000678335	2.61391E-03	0.000474255	NH3
Molar Flow	kmol/h	kmol/h	kmol/h	kmol/h	kmol/h	kmol/h	**Molar Flow**
Oxygen	0.211416	1.11556E-05	9.66169E-05	0.169209	4.11717E-07*	0	Oxygen
Nitrogen	0.657319	1.84198E-05	0.000191375	0.526007	3.66309E-07*	0	Nitrogen
Water	4666.53	4491.88	16723.2	67659.9	4061.92*	63634.3	Water
Carbon Dioxide	2932.84	4.09786	1378.81	6030.26	2.32698*	3226.59	Carbon Dioxide
Sulfur Dioxide	1.26819E-06	1.26445E-06	5.03948	20.1580	3.19556E-06*	20.1580	Sulfur Dioxide
MEA	0.744734	0.744733	3173.52	12695.1	1.777049*	12694.6	MEA
Argon	0.0147120	8.18531E-07	6.74381E-06	0.0117750	3.27186E-08*	0	Argon
NO	4.34452E-06	3.38779E-10	3.06492E-09	3.47807E-06	0.00000E+00*	0	NO
NO2	4.51139E-06	3.35035E-09	1.67801E-08	3.62253E-06	1.89163E-07*	0	NO2
NH3	0.241940	0.241670	0.137515	0.586127	0.106285*	0.377394	NH3
Mass Fraction	%	%	%	%	%	%	**Mass Fraction**
Oxygen	0.00317284	4.39872E-07	5.55920E-07	0.000239465	1.79515E-08*	0	Oxygen
Nitrogen	0.00863615	6.35843E-07	9.63997E-07	0.000651691	1.39824E-08*	0	Nitrogen
Water	39.4288	99.7166	54.1735	53.9085	99.7101*	55.5121	Water
Carbon Dioxide	60.5358	0.222230	10.9113	11.7373	0.139543*	6.87616	Carbon Dioxide
Sulfur Dioxide	3.81043E-08	9.98187E-08	0.0580529	0.0571142	2.78950E-07*	0.0625339	Sulfur Dioxide
MEA	0.0213354	0.0560557	34.8568	34.2958	0.1479066*	37.5489	MEA
Argon	0.000275643	4.02929E-08	4.84424E-08	2.08036E-05	1.78097E-09*	0	Argon
NO	6.11405E-08	1.25263E-11	1.65369E-11	4.61564E-09	0.00000E+00*	0	NO
NO2	9.73415E-08	1.89932E-10	1.38813E-10	7.37067E-09	1.18581E-08*	0	NO2
NH3	0.00193247	0.00507165	0.000421117	0.000441473	0.00246642*	0.000311228	NH3
Mass Flow	kg/h	kg/h	kg/h	kg/h	kg/h	kg/h	**Mass Flow**
Oxygen	6.76504	0.000356967	0.00309163	5.41448	1.31744E-05*	0	Oxygen
Nitrogen	18.4137	0.000516002	0.00536106	14.7352	1.02616E-05*	0	Nitrogen
Water	84068.9	80922.5	301274	1.21891E+06	73176.5*	1.14639E+06	Water
Carbon Dioxide	129073	180.345	60680.5	265389	102.409*	142001	Carbon Dioxide
Sulfur Dioxide	8.12449E-05	8.10053E-05	322.848	1291.40	0.000204720*	1291.40	Sulfur Dioxide
MEA	45.4906	45.4906	193848	775454	108.5476*	775428	MEA
Argon	0.587717	3.26987E-05	0.000269402	0.470386	1.30704E-06*	0	Argon
NO	0.000130362	1.01654E-08	9.19663E-08	0.000104363	0.00000E+00*	0	NO
NO2	0.000207549	1.54135E-07	7.71977E-07	0.000166657	8.70255E-06*	0	NO2
NH3	4.12036	4.11576	2.34195	9.98205	1.81009*	6.42721	NH3

Process Streams		324	325	330	332	333	334	Process Streams	
Property	**Units**							**Property**	**Units**
Temperature	°C	48.8889*	48.7348	115.025	52.2015	46.6290*	57.5252	Temperature	°C
Pressure	bara	2.12753	2.09306	2.5699	10.7394	3.13695*	5.02333	Pressure	bara
Mole Fraction Vapor	%	40.8181	0	0	0	0	0	Mole Fraction Vapor	%
Molecular Weight	kg/kmol	28.0503	18.0460	26.1329	26.1678	18.0490	25.9515	Molecular Weight	kg/kmol
Mass Density	kg/m³	5.50157	988.447	1132.28	1158.55	989.272	1109.97	Mass Density	kg/m³
Molar Flow	kmol/h	7601.24	4496.96	21280.7	86406.7	4066.13	79576.0	Molar Flow	kmol/h
Mass Flow	kg/h	213217	81152.4	556128	2.26108E+06	73389.3*	2.06512E+06	Mass Flow	kg/h
Std Vapor Volumetric Flow	m³/h	180077	106535	504150	2.04701E+06	96328.2	1.88519E+06	Std Vapor Volumetric Flow	m³/h
Std Liquid Volumetric Flow	m³/h	242.339	81.2743	566.302	2306.89	73.4834	2083.10	Std Liquid Volumetric Flow	m³/h
Compressibility		0.405120	0.00142783	0.00183776	0.00896698	0.00283872	0.00427176	Compressibility	
Specific Gravity			0.989381	1.13335	1.15965	0.990207	1.11102	Specific Gravity	
Mass Enthalpy	kJ/kg	-11580.1	-15734.2	-10946.0	-11173.5	-15738.5	-11031.8	Mass Enthalpy	kJ/kg
Dynamic Viscosity	cP		0.570793	0.735446	2.70208	0.594759	2.02473	Dynamic Viscosity	cP
Thermal Conductivity	W/(m*°C)		0.633504	0.392565	0.376282	0.631477	0.398795	Thermal Conductivity	W/(m*°C)
Surface Tension	dyn/cm		68.0060	88.8447	93.8928	68.4232	57.7806	Surface Tension	dyn/cm
Mass Cp	kJ/(kg*°C)	2.14689	4.17233	3.47145	3.17010	4.16701	3.31183	Mass Cp	kJ/(kg*°C)

Process Streams	400	401	402	403	404	405	406	407	408	409	Process Streams
	Stripped CO2	1st Stage Suction	1st Stage Discharge	ME-112 CO2 Outlet	ME-113 CO2 Outlet	2nd Stage Suction	2nd Stage Discharge	ME-114 CO2 Outlet	ME-115 CO2 Outlet	CO2 Dryer Inlet	
Mole Fraction	%	%	%	%	%	%	%	%	%	%	**Mole Fraction**
Oxygen	0.00681010	0.00681010	0.00681010	0.00681010	0.00681010	0.00713485	0.00713485	0.00713485	0.00713485	0.00719072	Oxygen
Nitrogen	0.0211740	0.0211740	0.0211740	0.0211740	0.0211740	0.0221838	0.0221838	0.0221838	0.0221838	0.0223575	Nitrogen
Water	5.62626	5.62626	5.62626	5.62626	5.62626	1.13208	1.13208	1.13208	1.13208	0.363821	Water
Carbon Dioxide	94.3453	94.3453	94.3453	94.3453	94.3453	98.8381	98.8381	98.8381	98.8381	99.6061	Carbon Dioxide
Sulfur Dioxide	1.20480E-10	1.20480E-10	1.20480E-10	1.20480E-10	1.20480E-10	1.26083E-10	1.26083E-10	1.26083E-10	1.26083E-10	1.26961E-10	Sulfur Dioxide
MEA	2.84690E-08	2.84690E-08	2.84690E-08	2.84690E-08	2.84690E-08	2.30320E-09	2.30320E-09	2.30320E-09	2.30320E-09	4.52955E-10	MEA
Argon	0.000473902	0.000473902	0.000473902	0.000473902	0.000473902	0.000496500	0.000496500	0.000496500	0.000496500	0.000500388	Argon
NO	1.39942E-07	1.39942E-07	1.39942E-07	1.39942E-07	1.39942E-07	1.46615E-07	1.46615E-07	1.46615E-07	1.46615E-07	1.47763E-07	NO
NO2	1.45220E-07	1.45220E-07	1.45220E-07	1.45220E-07	1.45220E-07	1.50157E-07	1.50157E-07	1.50157E-07	1.50157E-07	1.49842E-07	NO2
NH3	8.69842E-06	8.69842E-06	8.69842E-06	8.69842E-06	8.69842E-06	7.51029E-06	7.51029E-06	7.51029E-06	7.51029E-06	6.55797E-06	NH3
Molar Flow	kmol/h	kmol/h	kmol/h	kmol/h	kmol/h	kmol/h	kmol/h	kmol/h	kmol/h	kmol/h	**Molar Flow**
Oxygen	0.211404	0.211404	0.211404	0.211404	0.211404	0.211404	0.211404	0.211404	0.211404	0.211403	Oxygen
Nitrogen	0.657300	0.657300	0.657300	0.657300	0.657300	0.657299	0.657299	0.657299	0.657299	0.657298	Nitrogen
Water	174.655	174.655	174.655	174.655	174.655	33.5432	33.5432	33.5432	33.5432	10.6961	Water
Carbon Dioxide	2928.74	2928.74	2928.74	2928.74	2928.74	2928.55	2928.55	2928.55	2928.55	2928.36	Carbon Dioxide
Sulfur Dioxide	3.74003E-09	3.74003E-09	3.74003E-09	3.74003E-09	3.74003E-09	3.73581E-09	3.73581E-09	3.73581E-09	3.73581E-09	3.73258E-09	Sulfur Dioxide
MEA	8.83757E-07	8.83757E-07	8.83757E-07	8.83757E-07	8.83757E-07	6.82431E-08	6.82431E-08	6.82431E-08	6.82431E-08	1.33166E-08	MEA
Argon	0.0147112	0.0147112	0.0147112	0.0147112	0.0147112	0.0147112	0.0147112	0.0147112	0.0147112	0.0147111	Argon
NO	4.34418E-06	4.34418E-06	4.34418E-06	4.34418E-06	4.34418E-06	4.34416E-06	4.34416E-06	4.34416E-06	4.34416E-06	4.34413E-06	NO
NO2	4.50804E-06	4.50804E-06	4.50804E-06	4.50804E-06	4.50804E-06	4.44910E-06	4.44910E-06	4.44910E-06	4.44910E-06	4.40527E-06	NO2
NH3	0.000270023	0.000270023	0.000270023	0.000270023	0.000270023	0.000222528	0.000222528	0.000222528	0.000222528	0.000192800	NH3
Mass Fraction	%	%	%	%	%	%	%	%	%	%	**Mass Fraction**
Oxygen	0.00512226	0.00512226	0.00512226	0.00512226	0.00512226	0.00522312	0.00522312	0.00522312	0.00522312	0.00524008	Oxygen
Nitrogen	0.0139426	0.0139426	0.0139426	0.0139426	0.0139426	0.0142171	0.0142171	0.0142171	0.0142171	0.0142633	Nitrogen
Water	2.38251	2.38251	2.38251	2.38251	2.38251	0.466583	0.466583	0.466583	0.466583	0.149266	Water
Carbon Dioxide	97.5980	97.5980	97.5980	97.5980	97.5980	99.5135	99.5135	99.5135	99.5135	99.8308	Carbon Dioxide
Sulfur Dioxide	1.81427E-10	1.81427E-10	1.81427E-10	1.81427E-10	1.81427E-10	1.84791E-10	1.84791E-10	1.84791E-10	1.84791E-10	1.85232E-10	Sulfur Dioxide
MEA	4.08759E-08	4.08759E-08	4.08759E-08	4.08759E-08	4.08759E-08	3.21857E-09	3.21857E-09	3.21857E-09	3.21857E-09	6.30097E-10	MEA
Argon	0.000444998	0.000444998	0.000444998	0.000444998	0.000444998	0.000453760	0.000453760	0.000453760	0.000453760	0.000455233	Argon
NO	9.87031E-08	9.87031E-08	9.87031E-08	9.87031E-08	9.87031E-08	1.00646E-07	1.00646E-07	1.00646E-07	1.00646E-07	1.00973E-07	NO
NO2	1.57040E-07	1.57040E-07	1.57040E-07	1.57040E-07	1.57040E-07	1.58039E-07	1.58039E-07	1.58039E-07	1.58039E-07	1.56991E-07	NO2
NH3	3.48211E-06	3.48211E-06	3.48211E-06	3.48211E-06	3.48211E-06	2.92614E-06	2.92614E-06	2.92614E-06	2.92614E-06	2.54349E-06	NH3
Mass Flow	kg/h	kg/h	kg/h	kg/h	kg/h	kg/h	kg/h	kg/h	kg/h	kg/h	**Mass Flow**
Oxygen	6.76469	6.76469	6.76469	6.76469	6.76469	6.76467	6.76467	6.76467	6.76467	6.76464	Oxygen
Nitrogen	18.4132	18.4132	18.4132	18.4132	18.4132	18.4132	18.4132	18.4132	18.4132	18.4132	Nitrogen
Water	3146.45	3146.45	3146.45	3146.45	3146.45	604.290	604.290	604.290	604.290	192.694	Water
Carbon Dioxide	128892	128892	128892	128892	128892	128884	128884	128884	128884	128876	Carbon Dioxide
Sulfur Dioxide	2.39600E-07	2.39600E-07	2.39600E-07	2.39600E-07	2.39600E-07	2.39330E-07	2.39330E-07	2.39330E-07	2.39330E-07	2.39123E-07	Sulfur Dioxide
MEA	5.39826E-05	5.39826E-05	5.39826E-05	5.39826E-05	5.39826E-05	4.16850E-06	4.16850E-06	4.16850E-06	4.16850E-06	8.13419E-07	MEA
Argon	0.587684	0.587684	0.587684	0.587684	0.587684	0.587682	0.587682	0.587682	0.587682	0.587680	Argon
NO	0.000130352	0.000130352	0.000130352	0.000130352	0.000130352	0.000130351	0.000130351	0.000130351	0.000130351	0.000130350	NO
NO2	0.000207395	0.000207395	0.000207395	0.000207395	0.000207395	0.000204683	0.000204683	0.000204683	0.000204683	0.000202667	NO2
NH3	0.00459863	0.00459863	0.00459863	0.00459863	0.00459863	0.00378977	0.00378977	0.00378977	0.00378977	0.00328349	NH3

Process Streams		400	401	402	403	404	405	406	407	408	409	Process Streams	
Property	**Units**											**Property**	**Units**
Temperature	°C	48.7348	48.7348	176.667*	129.444*	38.6*	38.4818	176.667*	129.444*	38.6*	38.5336	Temperature	°C
Pressure	bara	2.09306	2.09306	7.03751	6.76172	6.41698	6.34803	23.7980	23.5222	23.1775	23.1085	Pressure	bara
Mole Fraction Vapor	%	100	100	100	100	95.4395	100	100	100	99.2231	100	Mole Fraction Vapor	%
Molecular Weight	kg/kmol	42.5428	42.5428	42.5428	42.5428	42.5428	43.7108	43.7108	43.7108	43.7108	43.9105	Molecular Weight	kg/kmol
Mass Density	kg/m³	3.35894	3.35894	8.08504	8.71999	11.3891	11.0513	28.7098	32.2633	44.6062	44.3311	Mass Density	kg/m³
Molar Flow	kmol/h	3104.28	3104.28	3104.28	3104.28	3104.28	2962.97	2962.97	2962.97	2962.97	2939.94	Molar Flow	kmol/h
Mass Flow	kg/h	132065	132065	132065	132065	132065	129514	129514	129514	129514	129094	Mass Flow	kg/h
Std Vapor Volumetric Flow	m³/h	73541.6	73541.6	73541.6	73541.6	73541.6	70194.1	70194.1	70194.1	70194.1	69648.4	Std Vapor Volumetric Flow	m³/h
Std Liquid Volumetric Flow	m³/h	161.064	161.064	161.064	161.064	161.064	158.509	158.509	158.509	158.509	158.087	Std Liquid Volumetric Flow	m³/h
Compressibility		0.990536	0.990536	0.990131	0.985520	0.924755	0.969032	0.968789	0.952043	0.876233	0.883250	Compressibility	
Specific Gravity		1.46889	1.46889	1.46889	1.46889		1.50922	1.50922	1.50922		1.51611	Specific Gravity	
Mass Enthalpy	kJ/kg	-9027.47	-9027.47	-8907.62	-8954.69	-9086.72	-8954.73	-8832.27	-8880.38	-8978.36	-8956.57	Mass Enthalpy	kJ/kg
Dynamic Viscosity	cP	0.0161678	0.0161678	0.0216304	0.0197374		0.0158805	0.0220197	0.0201921		0.0164906	Dynamic Viscosity	cP
Thermal Conductivity	W/(m*°C)	0.0184448	0.0184448	0.0288630	0.0251240		0.0178747	0.0296531	0.0260632		0.0193933	Thermal Conductivity	W/(m*°C)
Surface Tension	dyn/cm											Surface Tension	dyn/cm
Mass Cp	kJ/(kg*°C)	0.901436	0.901436	1.01627	0.983338	0.954875	0.892321	1.03273	1.01173	1.00658	0.996079	Mass Cp	kJ/(kg*°C)

Process Streams	410	411	412	413	414	415	416	417	418	Process Streams
	3rd Stage Suction	3rd Stage Discharge	ME-116 CO2 Outlet	ME-117 CO2 Outlet	CO2 to ME-118	Interstage Liquid	Liquified CO2 to MP-108	Water from Dryer Package	CO2 Product	
Mole Fraction	%	%	%	%	%	%	%	%		**Mole Fraction**
Oxygen	7.21617E-03	7.21617E-03	7.21617E-03	7.21617E-03	7.21617E-03	9.06495E-07	0.00721617	0	0.00721617	Oxygen
Nitrogen	2.24366E-02	2.24366E-02	2.24366E-02	2.24366E-02	2.24366E-02	1.45703E-06	0.0224366	0	0.0224366	Nitrogen
Water	0.0110	0.0110	0.0110	0.0110	0.0110	99.7710	0.0109533	100	0.0109533	Water
Carbon Dioxide	99.958885	99.958885	99.958885	99.958885	99.958885	0.228969	99.9589	0	99.9589	Carbon Dioxide
Sulfur Dioxide	1.27414E-10	1.27414E-10	1.27414E-10	1.27414E-10	1.27414E-10	4.47810E-12	1.27414E-10	0	1.27414E-10	Sulfur Dioxide
MEA	4.54564E-10	4.54564E-10	4.54564E-10	4.54564E-10	4.54564E-10	5.30346E-07	4.54564E-10	0	4.54564E-10	MEA
Argon	5.02159E-04	5.02159E-04	5.02159E-04	5.02159E-04	5.02159E-04	6.69294E-08	0.000502159	0	0.000502159	Argon
NO	1.48286E-07	1.48286E-07	1.48286E-07	1.48286E-07	1.48286E-07	2.74784E-11	1.48286E-07	0	1.48286E-07	NO
NO2	1.50373E-07	1.50373E-07	1.50373E-07	1.50373E-07	1.50373E-07	6.25482E-08	1.50373E-07	0	1.50373E-07	NO2
NH3	6.58123E-06	6.58123E-06	6.58123E-06	6.58123E-06	6.58123E-06	4.71742E-05	6.58123E-06	0	6.58123E-06	NH3
Molar Flow	kmol/h	kmol/h	kmol/h	kmol/h	kmol/h	kmol/h	kmol/h	kmol/h	kmol/h	**Molar Flow**
Oxygen	2.11403E-01	2.11403E-01	2.11403E-01	2.11403E-01	2.11403E-01	1.48952E-06	0.211403	0	0.211403	Oxygen
Nitrogen	6.57298E-01	6.57298E-01	6.57298E-01	6.57298E-01	6.57298E-01	2.39415E-06	0.657298	0	0.657298	Nitrogen
Water	0.321	0.321	0.321	0.321	0.321	163.941	0.320884	10.4	0.320884	Water
Carbon Dioxide	2928.368648	2928.368648	2928.368648	2928.368648	2928.368648	0.376235	2928.37	0	2928.37	Carbon Dioxide
Sulfur Dioxide	3.73268E-09	3.73268E-09	3.73268E-09	3.73268E-09	3.73268E-09	7.35827E-12	3.73268E-09	0	3.73268E-09	Sulfur Dioxide
MEA	1.33168E-08	1.33168E-08	1.33168E-08	1.33168E-08	1.33168E-08	8.71448E-07	1.33168E-08	0	1.33168E-08	MEA
Argon	1.47111E-02	1.47111E-02	1.47111E-02	1.47111E-02	1.47111E-02	1.09976E-07	0.0147111	0	0.0147111	Argon
NO	4.34413E-06	4.34413E-06	4.34413E-06	4.34413E-06	4.34413E-06	4.51516E-11	4.34413E-06	0	4.34413E-06	NO
NO2	4.40527E-06	4.40527E-06	4.40527E-06	4.40527E-06	4.40527E-06	1.02777E-07	4.40527E-06	0	4.40527E-06	NO2
NH3	1.92802E-04	1.92802E-04	1.92802E-04	1.92802E-04	1.92802E-04	7.75153E-05	0.000192802	0	0.000192802	NH3
Mass Fraction	%	%	%	%	%	%	%	%	%	**Mass Fraction**
Oxygen	5.24767E-03	5.24767E-03	5.24767E-03	5.24767E-03	5.24767E-03	1.60482E-06	0.00524767	0	0.00524767	Oxygen
Nitrogen	1.42840E-02	1.42840E-02	1.42840E-02	1.42840E-02	1.42840E-02	2.25820E-06	0.0142840	0	0.0142840	Nitrogen
Water	0.0045	0.0045	0.0045	0.0045	0.0045	99.4424	0.00448447	100	0.00448447	Water
Carbon Dioxide	99.975525	99.975525	99.975525	99.975525	99.975525	0.557507	99.9755	0	99.9755	Carbon Dioxide
Sulfur Dioxide	1.85505E-10	1.85505E-10	1.85505E-10	1.85505E-10	1.85505E-10	1.58720E-11	1.85505E-10	0	1.85505E-10	Sulfur Dioxide
MEA	6.31018E-10	6.31018E-10	6.31018E-10	6.31018E-10	6.31018E-10	1.79228E-06	6.31018E-10	0	6.31018E-10	MEA
Argon	4.55892E-04	4.55892E-04	4.55892E-04	4.55892E-04	4.55892E-04	1.47924E-07	0.000455892	0	0.000455892	Argon
NO	1.01119E-07	1.01119E-07	1.01119E-07	1.01119E-07	1.01119E-07	4.56170E-11	1.01119E-07	0	1.01119E-07	NO
NO2	1.57219E-07	1.57219E-07	1.57219E-07	1.57219E-07	1.57219E-07	1.59203E-07	1.57219E-07	0	1.57219E-07	NO2
NH3	2.54719E-06	2.54719E-06	2.54719E-06	2.54719E-06	2.54719E-06	4.44487E-05	2.54719E-06	0	2.54719E-06	NH3
Mass Flow	kg/h	kg/h	kg/h	kg/h	kg/h	kg/h	kg/h	kg/h	kg/h	**Mass Flow**
Oxygen	6.76464E+00	6.76464E+00	6.76464E+00	6.76464E+00	6.76464E+00	4.76630E-05	6.76464	0	6.76464	Oxygen
Nitrogen	1.84132E+01	1.84132E+01	1.84132E+01	1.84132E+01	1.84132E+01	6.70684E-05	18.4132	0	18.4132	Nitrogen
Water	5.78	5.78	5.78	5.78	5.78	2953.44	5.7808	186.914	5.7808	Water
Carbon Dioxide	128876.0400	128876.0400	128876.0400	128876.0400	128876.0400	16.5579	128876	0	128876	Carbon Dioxide
Sulfur Dioxide	2.39130E-07	2.39130E-07	2.39130E-07	2.39130E-07	2.39130E-07	4.71399E-10	2.39130E-07	0	2.39130E-07	Sulfur Dioxide
MEA	8.13429E-07	8.13429E-07	8.13429E-07	8.13429E-07	8.13429E-07	5.32307E-05	8.13429E-07	0	8.13429E-07	MEA
Argon	5.87680E-01	5.87680E-01	5.87680E-01	5.87680E-01	5.87680E-01	4.39333E-06	0.587680	0	0.587680	Argon
NO	1.30350E-04	1.30350E-04	1.30350E-04	1.30350E-04	1.30350E-04	1.35482E-09	0.000130350	0	0.000130350	NO
NO2	2.02667E-04	2.02667E-04	2.02667E-04	2.02667E-04	2.02667E-04	4.72832E-06	0.000202667	0	0.000202667	NO2
NH3	0.00328352	0.00328352	0.00328352	0.00328352	0.00328352	0.00132013	0.00328352	0	0.00328352	NH3

Process Streams		410	411	412	413	414	415	416	417	418	Process Streams	
Property	Units										Property	Units
Temperature	°C	38.5336	176.6667	129.4444	38.6000	78.0497	38.4818	38.5518	38.5336	38.6*	Temperature	°C
Pressure	bara	22.76379	83.58257	83.30678	82.96204	152.000	6.34803	82.8931	22.1075	151.000*	Pressure	bara
Mole Fraction Vapor	%	100	100	100	0	0	0	0	0	0	Mole Fraction Vapor	%
Molecular Weight	kg/kmol	44.0022	44.0022	44.0022	44.0022	44.0022	18.0748	44.0022	18.0153	44.0022	Molecular Weight	kg/kmol
Mass Density	kg/m³	43.653	109.003	130.180	350.303	432.318	993.301	350.122	992.374	762.914	Mass Density	kg/m³
Molar Flow	kmol/h	2929.573	2929.573	2929.573	2929.573	2929.573	164.317	2929.57	10.38	2929.57	Molar Flow	kmol/h
Mass Flow	kg/h	128907.59	128907.59	128907.59	128907.59	128907.59	2970.00	128908	186.91	128908	Mass Flow	kg/h
Std Vapor Volumetric Flow	m³/h	69402.79	69402.79	69402.79	69402.79	69402.79	3892.73	69402.8	232.6	69402.8	Std Vapor Volumetric Flow	m³/h
Std Liquid Volumetric Flow	m³/h	157.90060	157.90060	157.90060	157.90060	157.90060	2.97663	157.901	245.795	157.901	Std Liquid Volumetric Flow	m³/h
Compressibility		0.88543023	0.90215969	0.84122008	0.40204036	0.52981653	0.00445816	0.401976	0.016187	0.335996	Compressibility	
Specific Gravity		1.519281	1.519281	1.519281	0.350303	0.432727	0.994240	0.35012	0.99331	0.76291	Specific Gravity	
Mass Enthalpy	kJ/kg	-8949.6	-8839.6	-8896.1	-9064.2	-9040.7	-15773.7	-9064.21	-15808.54	-9158.94	Mass Enthalpy	kJ/kg
Dynamic Viscosity	cP	0.016479	0.023811	0.022502	0.027350	0.016026	0.685071	0.0273379	0.6934499	0.0657033	Dynamic Viscosity	cP
Thermal Conductivity	W/(m*°C)	0.019344	0.033473	0.030802	0.038558	0.107259	0.618686	0.0385384	0.6241429	0.0869755	Thermal Conductivity	W/(m*°C)
Surface Tension	dyn/cm						69.8940		70.0444		Surface Tension	dyn/cm
Mass Cp	kJ/(kg*°C)	0.99110	1.17360	1.23869	8.40574	2.69000	4.09961	8.42980	4.10437	2.75208	Mass Cp	kJ/(kg*°C)

Process Streams	501	502	503	504	505	506	509	510	511	512	513	514	515	516	Process Streams
	CW Supply to ME-101	CW Return from ME-101	CW Supply to ME-104	CW Return from ME-104	CW Supply to ME-102	CW Return from ME-102	CW Supply to ME-111	CW Return from ME-111	LP Steam from ME-112	LP Condensate from ME-109	LP Steam from ME-114	LP Steam to ME-109	CW Supply to ME-113	CW Return from ME-113	
Mole Fraction	%	%	%	%	%	%	%	%	%	%	%	%	%	%	**Mole Fraction**
Oxygen	0*	0	0*	0	0*	0	0*	0	0	0	0	0	0*	0	Oxygen
Nitrogen	0*	0	0*	0	0*	0	0*	0	0	0	0	0	0*	0	Nitrogen
Water	100*	100	100*	100	100*	100	100*	100	100	100	100	100	100*	100	Water
Carbon Dioxide	0*	0	0*	0	0*	0	0*	0	0	0	0	0	0*	0	Carbon Dioxide
Sulfur Dioxide	0*	0	0*	0	0*	0	0*	0	0	0	0	0	0*	0	Sulfur Dioxide
MEA	0*	0	0*	0	0*	0	0*	0	0	0	0	0	0*	0	MEA
Argon	0*	0	0*	0	0*	0	0*	0	0	0	0	0	0*	0	Argon
NO	0*	0	0*	0	0*	0	0*	0	0	0	0	0	0*	0	NO
NO2	0*	0	0*	0	0*	0	0*	0	0	0	0	0	0*	0	NO2
NH3	0*	0	0*	0	0*	0	0*	0	0	0	0	0	0*	0	NH3
Molar Flow	kmol/h	kmol/h	kmol/h	kmol/h	kmol/h	kmol/h	kmol/h	kmol/h	kmol/h	kmol/h	kmol/h	kmol/h	kmol/h	kmol/h	**Molar Flow**
Oxygen	0*	0	0*	0	0*	0	0*	0	0	0	0	0	0*	0	Oxygen
Nitrogen	0*	0	0*	0	0*	0	0*	0	0	0	0	0	0*	0	Nitrogen
Water	113589.3*	113589.3	113589.3*	113589.3	63510.9*	63510.9	257388*	257388	148.685	472.002	149.045	472.014	21872.3*	21872.3	Water
Carbon Dioxide	0*	0	0*	0	0*	0	0*	0	0	0	0	0	0*	0	Carbon Dioxide
Sulfur Dioxide	0*	0	0*	0	0*	0	0*	0	0	0	0	0	0*	0	Sulfur Dioxide
MEA	0*	0	0*	0	0*	0	0*	0	0	0	0	0	0*	0	MEA
Argon	0*	0	0*	0	0*	0	0*	0	0	0	0	0	0*	0	Argon
NO	0*	0	0*	0	0*	0	0*	0	0	0	0	0	0*	0	NO
NO2	0*	0	0*	0	0*	0	0*	0	0	0	0	0	0*	0	NO2
NH3	0*	0	0*	0	0*	0	0*	0	0	0	0	0	0*	0	NH3
Mass Fraction	%	%	%	%	%	%	%	%	%	%	%	%	%	%	**Mass Fraction**
Oxygen	0*	0	0*	0	0*	0	0*	0	0	0	0	0	0*	0	Oxygen
Nitrogen	0*	0	0*	0	0*	0	0*	0	0	0	0	0	0*	0	Nitrogen
Water	100*	100	100*	100	100*	100	100*	100	100	100	100	100	100*	100	Water
Carbon Dioxide	0*	0	0*	0	0*	0	0*	0	0	0	0	0	0*	0	Carbon Dioxide
Sulfur Dioxide	0*	0	0*	0	0*	0	0*	0	0	0	0	0	0*	0	Sulfur Dioxide
MEA	0*	0	0*	0	0*	0	0*	0	0	0	0	0	0*	0	MEA
Argon	0*	0	0*	0	0*	0	0*	0	0	0	0	0	0*	0	Argon
NO	0*	0	0*	0	0*	0	0*	0	0	0	0	0	0*	0	NO
NO2	0*	0	0*	0	0*	0	0*	0	0	0	0	0	0*	0	NO2
NH3	0*	0	0*	0	0*	0	0*	0	0	0	0	0	0*	0	NH3
Mass Flow	kg/h	kg/h	kg/h	kg/h	kg/h	kg/h	kg/h	kg/h	kg/h	kg/h	kg/h	kg/h	kg/h	kg/h	**Mass Flow**
Oxygen	0*	0	0*	0	0*	0	0*	0	0	0	0	0	0*	0	Oxygen
Nitrogen	0*	0	0*	0	0*	0	0*	0	0	0	0	0	0*	0	Nitrogen
Water	2.04634E+06*	2.04634E+06	2.04634E+06*	2.04634E+06	1.14417E+06*	1.14417E+06	4.63692E+06*	4.63692E+06	2678.60	8503.25	2685.09	8503.47	394035*	394035	Water
Carbon Dioxide	0*	0	0*	0	0*	0	0*	0	0	0	0	0	0*	0	Carbon Dioxide
Sulfur Dioxide	0*	0	0*	0	0*	0	0*	0	0	0	0	0	0*	0	Sulfur Dioxide
MEA	0*	0	0*	0	0*	0	0*	0	0	0	0	0	0*	0	MEA
Argon	0*	0	0*	0	0*	0	0*	0	0	0	0	0	0*	0	Argon
NO	0*	0	0*	0	0*	0	0*	0	0	0	0	0	0*	0	NO
NO2	0*	0	0*	0	0*	0	0*	0	0	0	0	0	0*	0	NO2
NH3	0*	0	0*	0	0*	0	0*	0	0	0	0	0	0*	0	NH3

Process Streams		501	502	503	504	505	506	509	510	511	512	513	514	515	516	Process Streams	
Property	**Units**															**Property**	**Units**
Temperature	°C	28.6*	39.3889*	28.6*	39.3889*	28.6*	39.3889*	28.6*	39.3889*	125.829	124.433	125.829	125.829	28.6*	39.3889*	Temperature	°C
Pressure	bara	2.9999*	2.31042	2.9999*	2.31042	2.9999*	2.31042	2.9999*	1.965686	2.37913	2.27913	2.37913	2.37913	1.9999*	1.31042	Pressure	bara
Mole Fraction Vapor	%	0	0	0	0	0	0	0	0	100*	0*	100	100	0	0	Mole Fraction Vapor	%
Molecular Weight	kg/kmol	18.0153	18.0153	18.0153	18.0153	18.0153	18.0153	18.0153	18.0153	18.0153	18.0153	18.0153	18.0153	18.0153	18.0153	Molecular Weight	kg/kmol
Mass Density	kg/m³	995.500	991.758	995.487	991.758	995.487	991.758	995.487	991.753	1.31452	940.049	1.31452	1.31452	995.487	991.758	Mass Density	kg/m³
Molar Flow	kmol/h	113589.3*	113589.3	113589.3*	113589.3	63510.9	63510.9	257388	257388	148.685	472.002	149.045	472.014	21872.3	21872.3	Molar Flow	kmol/h
Mass Flow	kg/h	2.04634E+06	2.04634E+06	2.04634E+06	2.04634E+06	1.14417E+06	1.14417E+06	4.63692E+06	4.63692E+06	2678.60	8503.25	2685.09	8503.47	394035	394035	Mass Flow	kg/h
Std Vapor Volumetric Flow	m³/h	2.69098E+06	2.69098E+06	2.69098E+06	2.69098E+06	1.50460E+06	1.50460E+06	6.09763E+06	6.09763E+06	3522.36	11181.9	3530.90	11182.2	518163	518163	Std Vapor Volumetric Flow	m³/h
Std Liquid Volumetric Flow	m³/h	2048.36	2048.36	2048.36	2048.36	1145.29	1145.29	4641.48	4641.48	2.68120	8.51161	2.68770	8.51183	394.423	394.423	Std Liquid Volumetric Flow	m³/h
Compressibility		0.00144255	0.000916029	0.00144255	0.000916029	0.00144255	0.000916029	0.00144255	0.000675049	0.982899	0.00132129	0.982899	0.982899	0.00144255	0.000916029	Compressibility	
Specific Gravity		0.996428	0.992695	0.996428	0.992695	0.996428	0.992695	0.996428	0.992690	0.622021	0.940938	0.622021	0.622021	0.996428	0.992695	Specific Gravity	
Mass Enthalpy	kJ/kg	-15839.2	-15794.2	-15839.2	-15794.2	-15839.2	-15794.2	-15839.2	-15794.2	-13240.4	-15453.8	-13240.4	-13240.4	-15851.3	-15807.1	Mass Enthalpy	kJ/kg
Dynamic Viscosity	cP	0.844535	0.679165	0.844535	0.679165	0.844535	0.679165	0.844535	0.679115	0.0135380	0.219725	0.0135380	0.0135380	0.844535	0.679165	Dynamic Viscosity	cP
Thermal Conductivity	W/(m*°C)	0.611274	0.625192	0.611274	0.625192	0.611274	0.625192	0.611274	0.625192	0.0295720	0.684412	0.0295720	0.0295720	0.611274	0.625192	Thermal Conductivity	W/(m*°C)
Surface Tension	dyn/cm	71.9733	69.8791	71.9733	69.8791	71.9733	69.8791	71.9733	69.8791		53.4737			71.9733	69.8791	Surface Tension	dyn/cm
Mass Cp	kJ/(kg*°C)	4.18122	4.17650	4.18122	4.17650	4.18122	4.17650	4.18122	4.17657	1.94602	4.24824	1.94602	1.94602	4.10858	4.10712	Mass Cp	kJ/(kg*°C)

Process Streams	517	518	519	520	521	522	523	524	525	526	527	540	541	542	Process Streams
	CW Supply to ME-115	CW Return from ME-115	LP BFW to ME-112	LP BFW to ME-114	LP BFW to ME-116	CW Supply to ME-117	CW Return from ME-117	LP Steam from ME-116	LP Steam to ME-110	LP Condenstae from ME-110	MP Steam to Reclaimer	MP Condenstae from Reclaimer	CW Supply to ME-118	CW Return from ME-118	
Mole Fraction	%	%	%	%	%	%	%	%	%	%	%	%			**Mole Fraction**
Oxygen	0*	0	0*	0*	0*	0*	0	0	0*	0	-	-	0*	0	Oxygen
Nitrogen	0*	0	0*	0*	0*	0*	0	0	0*	0	-	-	0*	0	Nitrogen
Water	100*	100	100*	100*	100*	100*	100	100	100*	100	-	-	100*	100	Water
Carbon Dioxide	0*	0	0*	0*	0*	0*	0	0	0*	0	-	-	0*	0	Carbon Dioxide
Sulfur Dioxide	0*	0	0*	0*	0*	0*	0	0	0*	0	-	-	0*	0	Sulfur Dioxide
MEA	0*	0	0*	0*	0*	0*	0	0	0*	0	-	-	0*	0	MEA
Argon	0*	0	0*	0*	0*	0*	0	0	0*	0	-	-	0*	0	Argon
NO	0*	0	0*	0*	0*	0*	0	0	0*	0	-	-	0*	0	NO
NO2	0*	0	0*	0*	0*	0*	0	0	0*	0	-	-	0*	0	NO2
NH3	0*	0	0*	0*	0*	0*	0	0	0*	0	-	-	0*	0	NH3
Molar Flow	kmol/h	kmol/h	kmol/h	kmol/h	kmol/h	kmol/h	kmol/h	kmol/h	kmol/h	kmol/h	kmol/h	kmol/h	kmol/h	kmol/h	**Molar Flow**
Oxygen	0*	0	0*	0*	0*	0*	0	0	0*	0	-	-	0*	0	Oxygen
Nitrogen	0*	0	0*	0*	0*	0*	0	0	0*	0	-	-	0*	0	Nitrogen
Water	15917.8*	15917.8	148.685*	149.045*	174.272*	27191.6*	27191.6	174.272	11548.1*	11548.1	-	-	19120.5*	19120.5	Water
Carbon Dioxide	0*	0	0*	0*	0*	0*	0	0	0*	0	-	-	0*	0	Carbon Dioxide
Sulfur Dioxide	0*	0	0*	0*	0*	0*	0	0	0*	0	-	-	0*	0	Sulfur Dioxide
MEA	0*	0	0*	0*	0*	0*	0	0	0*	0	-	-	0*	0	MEA
Argon	0*	0	0*	0*	0*	0*	0	0	0*	0	-	-	0*	0	Argon
NO	0*	0	0*	0*	0*	0*	0	0	0*	0	-	-	0*	0	NO
NO2	0*	0	0*	0*	0*	0*	0	0	0*	0	-	-	0*	0	NO2
NH3	0*	0	0*	0*	0*	0*	0	0	0*	0	-	-	0*	0	NH3
Mass Fraction	%	%	%	%	%	%	%	%	%	%	%	%	%	%	**Mass Fraction**
Oxygen	0*	0	0*	0*	0*	0*	0	0	0*	0	-	-	0*	0	Oxygen
Nitrogen	0*	0	0*	0*	0*	0*	0	0	0*	0	-	-	0*	0	Nitrogen
Water	100*	100	100*	100*	100*	100*	100	100	100*	100	-	-	100*	100	Water
Carbon Dioxide	0*	0	0*	0*	0*	0*	0	0	0*	0	-	-	0*	0	Carbon Dioxide
Sulfur Dioxide	0*	0	0*	0*	0*	0*	0	0	0*	0	-	-	0*	0	Sulfur Dioxide
MEA	0*	0	0*	0*	0*	0*	0	0	0*	0	-	-	0*	0	MEA
Argon	0*	0	0*	0*	0*	0*	0	0	0*	0	-	-	0*	0	Argon
NO	0*	0	0*	0*	0*	0*	0	0	0*	0	-	-	0*	0	NO
NO2	0*	0	0*	0*	0*	0*	0	0	0*	0	-	-	0*	0	NO2
NH3	0*	0	0*	0*	0*	0*	0	0	0*	0	-	-	0*	0	NH3
Mass Flow	kg/h	kg/h	kg/h	kg/h	kg/h	kg/h	kg/h	kg/h	kg/h	kg/h	kg/h	kg/h	kg/h	kg/h	**Mass Flow**
Oxygen	0*	0	0*	0*	0*	0*	0	0	0*	0	-	-	0*	0	Oxygen
Nitrogen	0*	0	0*	0*	0*	0*	0	0	0*	0	-	-	0*	0	Nitrogen
Water	286764*	286764*	2679*	2685*	3140*	489864*	489864	3139.55	208042*	208042	-	-	344460*	344460	Water
Carbon Dioxide	0*	0	0*	0*	0*	0*	0	0	0*	0	-	-	0*	0	Carbon Dioxide
Sulfur Dioxide	0*	0	0*	0*	0*	0*	0	0	0*	0	-	-	0*	0	Sulfur Dioxide
MEA	0*	0	0*	0*	0*	0*	0	0	0*	0	-	-	0*	0	MEA
Argon	0*	0	0*	0*	0*	0*	0	0	0*	0	-	-	0*	0	Argon
NO	0*	0	0*	0*	0*	0*	0	0	0*	0	-	-	0*	0	NO
NO2	0*	0	0*	0*	0*	0*	0	0	0*	0	-	-	0*	0	NO2
NH3	0*	0	0*	0*	0*	0*	0	0	0*	0	-	-	0*	0	NH3

Process Streams		517	518	519	520	521	522	523	524	525	526	527	540	541	542	Process Streams	
Property	Units															Property	Units
Temperature	°C	28.6*	39.3889*	98.8889*	98.8889*	98.8889*	28.6*	39.3889*	125.829	135.049	133.935	-	-	28.6*	39.3889*	Temperature	°C
Pressure	bara	2.9999*	2.31042	2.67913*	2.67913*	2.67913*	2.9999*	2.31042	2.37913	3.13*	3.03	-	-	2.9999*	2.31042	Pressure	bara
Mole Fraction Vapor	%	0	0	0	0	0	0	0	100	100*	0*	-	-	0	0	Mole Fraction Vapor	%
Molecular Weight	kg/kmol	18.0153	18.0153	18.0153	18.0153	18.0153	18.0153	18.0153	18.0153	18.0153	18.0153	-	-	18.0153	18.0153	Molecular Weight	kg/kmol
Mass Density	kg/m³	995.487	991.758	959.571	959.571	959.571	995.487	991.758	1.31452	1.69746	931.991	-	-	995.487	991.758	Mass Density	kg/m³
Molar Flow	kmol/h	15917.8	15917.8	148.685	149.045	174.272	27191.6	27191.6	174.272	11548.1	11548.1	-	-	19120.5	19120.5	Molar Flow	kmol/h
Mass Flow	kg/h	286764	286764	2678.60	2685.09	3139.55	489864	489864	3139.55	208042*	208042	-	-	344460	344460	Mass Flow	kg/h
Std Vapor Volumetric Flow	m³/h	377100	377100	3522.36	3530.90	4128.95	644180	644180	4128.95	273579	273579	-	-	452972	452972	Std Vapor Volumetric Flow	m³/h
Std Liquid Volumetric Flow	m³/h	287.05	287.047	2.68120	2.68770	3.14293	490.347	490.347	3.14293	208.247	208.247	-	-	344.799	344.799	Std Liquid Volumetric Flow	m³/h
Compressibility		0.00144255	0.000916029	0.00144398	0.00144398	0.00144398	0.00144255	0.000916029	0.982899	0.978767	0.00173042	-	-	0.001442555	0.000916029	Compressibility	
Specific Gravity		0.996428	0.992695	0.960473	0.960473	0.960473	0.996428	0.992695	0.622021	0.622021	0.932872	-	-	0.996428	0.992695	Specific Gravity	
Mass Enthalpy	kJ/kg	-15839.2	-15807.1	-15561.3	-15561.3	-15561.3	-15839.2	-15807.1	-13240.4	-13225.1	-15396.0	-	-	-15851.3	-15807.1	Mass Enthalpy	kJ/kg
Dynamic Viscosity	cP	0.844535	0.679165	0.283008	0.283008	0.283008	0.844535	0.679165	0.0135380	0.0138811	0.202743	-	-	0.844535	0.679165	Dynamic Viscosity	cP
Thermal Conductivity	W/(m*°C)	0.611274	0.625192	0.675841	0.675841	0.675841	0.611274	0.625192	0.0295720	0.0305008	0.685639	-	-	0.611274	0.625192	Thermal Conductivity	W/(m*°C)
Surface Tension	dyn/cm	71.9733	69.8791	58.4630	58.4630	58.4630	71.9733	69.8791			51.5836	-	-	71.9733	69.8791	Surface Tension	dyn/cm
Mass Cp	kJ/(kg*°C)	4.18122	4.10712	4.17416	4.17416	4.17416	4.18122	4.10712	1.94602	1.95737	4.27550	-	-	4.10858	4.10712	Mass Cp	kJ/(kg*°C)

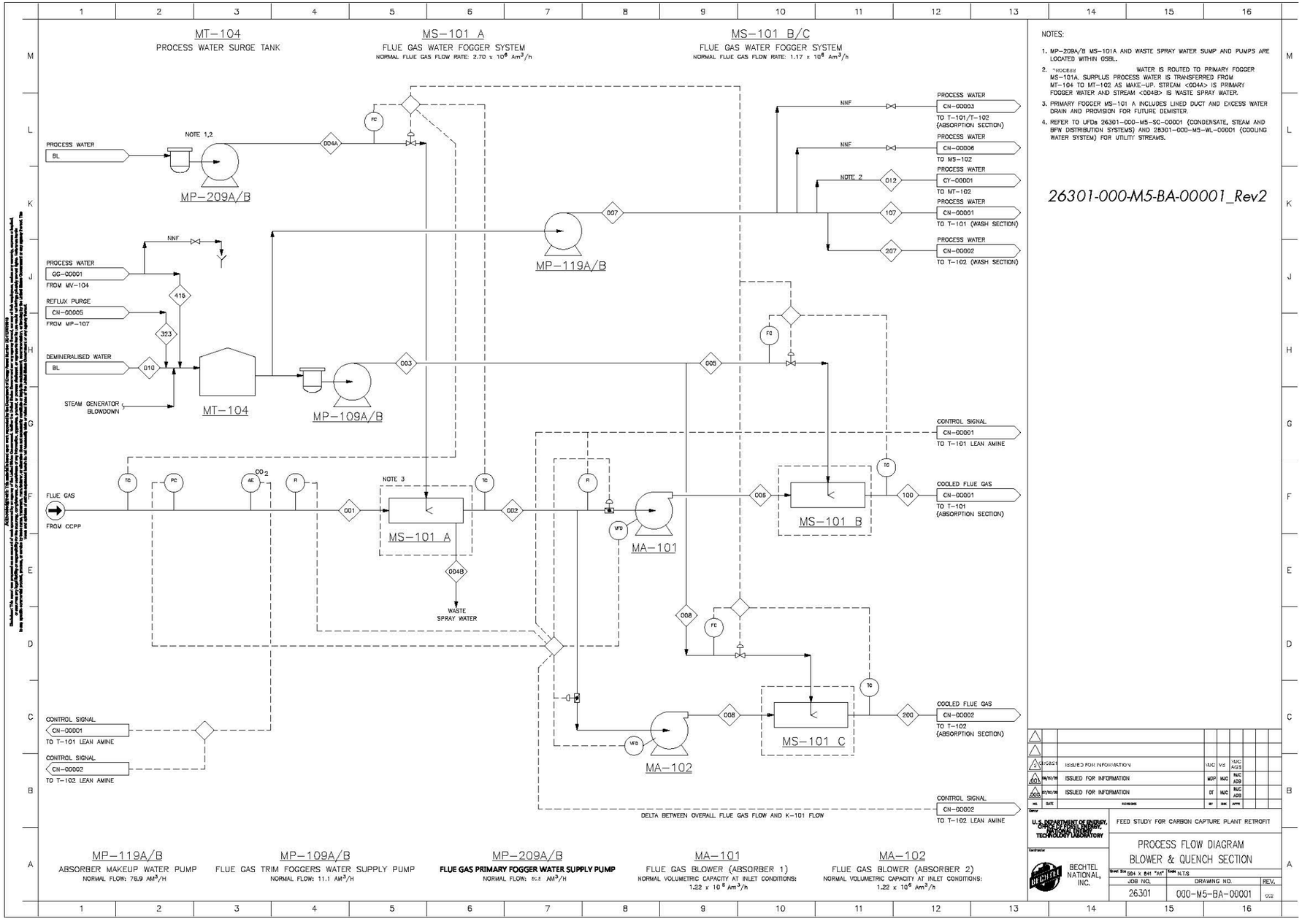
MT-104
PROCESS WATER SURGE TANK
MS-101 A
FLUE GAS WATER FOGGER SYSTEM
NORMAL FLUE GAS FLOW RATE: 2.70 x 10^6 Am3/h
MS-101 B/C
FLUE GAS WATER FOGGER SYSTEM
NORMAL FLUE GAS FLOW RATE: 1.17 x 10^6 Am3/h
NOTES:
1. MP-209A/B MS-101A AND WASTE SPRAY WATER SUMP AND PUMPS ARE LOCATED WITHIN OSBL.
2. "PROCESS" WATER IS ROUTED TO PRIMARY FOGGER MS-101A. SURPLUS PROCESS WATER IS TRANSFERRED FROM MT-104 TO MT-102 AS MAKE-UP. STREAM <004A> IS PRIMARY FOGGER WATER AND STREAM <004B> IS WASTE SPRAY WATER.
3. PRIMARY FOGGER MS-101 A INCLUDES LINED DUCT AND EXCESS WATER DRAIN AND PROVISION FOR FUTURE DEMISTER.
4. REFER TO UFDs 26301-000-MS-SC-00001 (CONDENSATE, STEAM AND BFW DISTRIBUTION SYSTEMS) AND 26301-000-MS-WL-00001 (COOLING WATER SYSTEM) FOR UTILITY STREAMS.
26301-000-M5-BA-00001_Rev2
PROCESS WATER
BL
NOTE 1,2
MP-209A/B
004A
FC
PROCESS WATER
CN-00003
TO T-101/T-102
(ABSORPTION SECTION)
NNF
PROCESS WATER
CN-00006
TO MS-102
NOTE 2
012
PROCESS WATER
CY-00001
TO MT-102
107
PROCESS WATER
CN-00001
TO T-101 (WASH SECTION)
207
PROCESS WATER
CN-00002
TO T-102 (WASH SECTION)
007
MP-119A/B
PROCESS WATER
QG-00001
FROM MV-104
418
REFLUX PURGE
CN-00005
FROM MP-107
323
DEMINERALISED WATER
BL
010
STEAM GENERATOR
BLOWDOWN
MT-104
MP-109A/B
003
005
FC
CONTROL SIGNAL
CN-00001
TO T-101 LEAN AMINE
TC
FLUE GAS
FROM CCPP
PC
AE
CO2
FI
001
NOTE 3
MS-101 A
002
TE
FI
004B
WASTE
SPRAY WATER
VFD
MA-101
006
MS-101 B
100
COOLED FLUE GAS
CN-00001
TO T-101
(ABSORPTION SECTION)
008
FC
TC
CONTROL SIGNAL
CN-00001
TO T-101 LEAN AMINE
CONTROL SIGNAL
CN-00002
TO T-102 LEAN AMINE
VFD
MA-102
008
MS-101 C
200
COOLED FLUE GAS
CN-00002
TO T-102
(ABSORPTION SECTION)
CONTROL SIGNAL
CN-00002
TO T-102 LEAN AMINE
DELTA BETWEEN OVERALL FLUE GAS FLOW AND K-101 FLOW
MP-119A/B
ABSORBER MAKEUP WATER PUMP
NORMAL FLOW: 76.9 Am3/H
MP-109A/B
FLUE GAS TRIM FOGGERS WATER SUPPLY PUMP
NORMAL FLOW: 11.1 Am3/H
MP-209A/B
FLUE GAS PRIMARY FOGGER WATER SUPPLY PUMP
NORMAL FLOW: 82.2 Am3/H
MA-101
FLUE GAS BLOWER (ABSORBER 1)
NORMAL VOLUMETRIC CAPACITY AT INLET CONDITIONS:
1.22 x 10^6 Am3/h
MA-102
FLUE GAS BLOWER (ABSORBER 2)
NORMAL VOLUMETRIC CAPACITY AT INLET CONDITIONS:
1.22 x 10^6 Am3/h
ISSUED FOR INFORMATION
ISSUED FOR INFORMATION
ISSUED FOR INFORMATION
U.S. DEPARTMENT OF ENERGY, OFFICE OF FOSSIL ENERGY, NATIONAL ENERGY TECHNOLOGY LABORATORY
BECHTEL NATIONAL, INC.
FEED STUDY FOR CARBON CAPTURE PLANT RETROFIT
PROCESS FLOW DIAGRAM
BLOWER & QUENCH SECTION
JOB NO. 26301
DRAWING NO. 000-MS-BA-00001
REV. 002

ME-101
WASH WATER COOLER (ABSORBER 1)
NORMAL DUTY: 25.6 x 10^3 KW

T-101
CO2 ABSORBER
INTERNAL DIAM: 11.8 m
LENGTH T/T: 43.4 m
PACKING TYPE: STRUCTURED PACKING
PACKING MATERIAL: SS

NOTES:
1. REFER TO UFDs 26301-000-M5-SC-00001 (CONDENSATE, STEAM AND BFW DISTRIBUTION SYSTEMS) AND 26301-000-M5-WL-00001 (COOLING WATER SYSTEM) FOR UTILITY STREAMS.

26301-000-M5-CN-00001_Absorber 1

OFF GAS TO ATMOSPHERE
103
CO_2
TC
AE
n
PROCESS WATER
BA-00001
FROM MP-119
107
FC
ME-101
CW RETURN
502
108
501
CW SUPPLY
LC
101
MP-102 A/B
CONTROL SIGNAL
BA-00001
FROM DUCT CO2 ANALYZER
EXCESS WATER
CN-00003
TO T-101/T-102
(ABSORPTION SECTION)
102
CONTROL SIGNAL
BA-00001
FROM MA-101 FLOW
T-101
COOLED FLUE GAS
BA-00001
FROM MS-101 B
100
RICH AMINE
CY-00001
FROM P-111
NNF
AMINE RETURN FROM SUMP
AMINE RETURN
CY-00001
TO MT-101
106
CONTROL SIGNAL
CN-00005
TO STRIPPER
3- ELEMENT CONTROL
SP
LEAN AMINE
CN-00003
FROM ME-102
104
CONTROL SIGNAL
CN-00004
FROM MV-201 LEVEL CONTROL
SEMI-LEAN AMINE
CN-00004
FROM ME-103
105
EQUALIZATION
CN-00002
TO/FROM T-102
(ABSORPTION SECTION)
CONTROL SIGNAL
CN-00003
TO EXCESS AMINE STORAGE
CONTROL SIGNAL
CN-00003
TO LEAN AMINE CHARGE
TO T-101/T-102
RICH AMINE
CN-00003
TO MF-102
MP-101 A/B

MP-102 A/B
WASH WATER RECIRCULATION PUMP (ABSORBER 1)
NORMAL CAPACITY: 1.42 x 10^3 Am^3/h

MP-101 A/B
RICH AMINE PUMPS (ABSORBER 1)
NORMAL CAPACITY: 1.22 x 10^3 Am^3/h

NO.	DATE	REVISIONS	BY	CHK	APPR
0	07/01/08	ISSUED FOR INFORMATION	DT	MJC	MJC ADB

Owner: U.S. DEPARTMENT OF ENERGY, OFFICE OF FOSSIL ENERGY, NATIONAL ENERGY TECHNOLOGY LABORATORY

Contractor: BECHTEL NATIONAL, INC.

FEED STUDY FOR CARBON CAPTURE PLANT RETROFIT

PROCESS FLOW DIAGRAM
ABSORBER T-101

Sheet Size 594 X 841 "A1" | Scale N.T.S

JOB NO.	DRAWING NO.	REV.
26301	000-M5-CN-00001	000

Disclaimer: This report was prepared as an account of work sponsored by the Department of Energy (herein Purchaser DE-FE0031994). Neither Purchaser, nor any of their employees, makes any warranty, express or implied, or assumes any legal liability or responsibility for the accuracy, completeness, or usefulness of any information, apparatus, product, or process disclosed, or represents that its use would not infringe privately owned rights. Reference herein to any specific commercial product, process, or service by trade name, trademark, manufacturer, or otherwise does not necessarily constitute or imply its endorsement, recommendation, or favoring by the United States Government or any agency thereof. The views and opinions of authors expressed herein do not necessarily state or reflect those of the United States Government or any agency thereof.

Acknowledgment: This material is based upon work supported by the Department of Energy Award Number DE-FE0031584.
Disclaimer: This report was prepared as an account of work sponsored by the United States Government. Neither the United States nor the United States Department of Energy, nor any of their employees, makes any warranty, express or implied, or assumes any legal liability or responsibility for the accuracy, completeness, or usefulness of any information, apparatus, product, or process disclosed, or represents that its use would not infringe privately owned rights. Reference herein to any specific commercial product, process, or service by trade name, trademark, manufacturer, or otherwise does not necessarily constitute or imply its endorsement, recommendation, or favoring by the United States Government or any agency thereof. The views and opinions of authors expressed herein do not necessarily state or reflect those of the United States Government or any agency thereof.

ME-104
WASH WATER COOLER (ABSORBER 2)
NORMAL DUTY: 25.6 x 10^3 KW

T-102
CO2 ABSORBER
INTERNAL DIAM: 11.8 m
LENGTH T/T: 43.4 m
PACKING TYPE: STRUCTURED PACKING
PACKING MATERIAL: SS

NOTES:
1. REFER TO UFDs 26301-000-M5-SC-00001 (CONDENSATE, STEAM AND BFW DISTRIBUTION SYSTEMS) AND 26301-000-M5-WL-00001 (COOLING WATER SYSTEM) FOR UTILITY STREAMS.

26301-000-M5-CN-00002

OFF GAS TO ATMOSPHERE
203
TC
CO_2 AE
FI
FC
PROCESS WATER
BA-00001
FROM MP-119
207
ME-104
CW RETURN
504
208
503
CW SUPPLY
LC
201
MP-104 A/B
CONTROL SIGNAL
BA-00001
FROM DUCT CO2 ANALYZER
EXCESS WATER
CN-00003
TO T-101/T-102 (ABSORPTION SECTION)
202
CONTROL SIGNAL
BA-00001
FROM DELTA BETWEEN OVERALL FLUE GAS FLOW AND MA-101 FLOW
COOLED FLUE GAS
BA-00001
FROM MS-101 C
200
T-102
SP
CONTROL SIGNAL
CN-00005
TO STRIPPER 3- ELEMENT CONTROL
LEAN AMINE
CN-00003
FROM ME-102
204
CONTROL SIGNAL
CN-00004
FROM MV-101 LEVEL CONTROL
SEMI-LEAN AMINE
CN-00004
FROM ME-103
205
EQUALIZATION
CN-00001
TO/FROM T-101 (ABSORPTION SECTION)
CONTROL SIGNAL
CN-00003
TO EXCESS AMINE TO STORAGE
CONTROL SIGNAL
CN-00003
TO LEAN AMINE CHARGE TO T-101/T-102
RICH AMINE
CN-00003
TO MF-102
MP-124 A/B

MP-104 A/B
WASH WATER RECIRCULATION PUMP (ABSORBER 2)
NORMAL CAPACITY: 1.42 x 10^3 AM^3/H

MP-124 A/B
RICH AMINE PUMP (ABSORBER 2)
NORMAL CAPACITY: 1.22 x 10^3 AM^3/H

NO.	DATE	REVISIONS	BY	CHK	APPR
1	07/27/20	ISSUED FOR INFORMATION	DT	MJC	MJC ADB

Owner: U.S. DEPARTMENT OF ENERGY, OFFICE OF FOSSIL ENERGY, NATIONAL ENERGY TECHNOLOGY LABORATORY

FEED STUDY FOR CARBON CAPTURE PLANT RETROFIT

Contractor: BECHTEL NATIONAL, INC.

PROCESS FLOW DIAGRAM
ABSORBER T-102

Sheet Size: 594 X 841 "A1" Scale: N.T.S

JOB NO.	DRAWING NO.	REV.
26301	000-M5-CN-00002	000

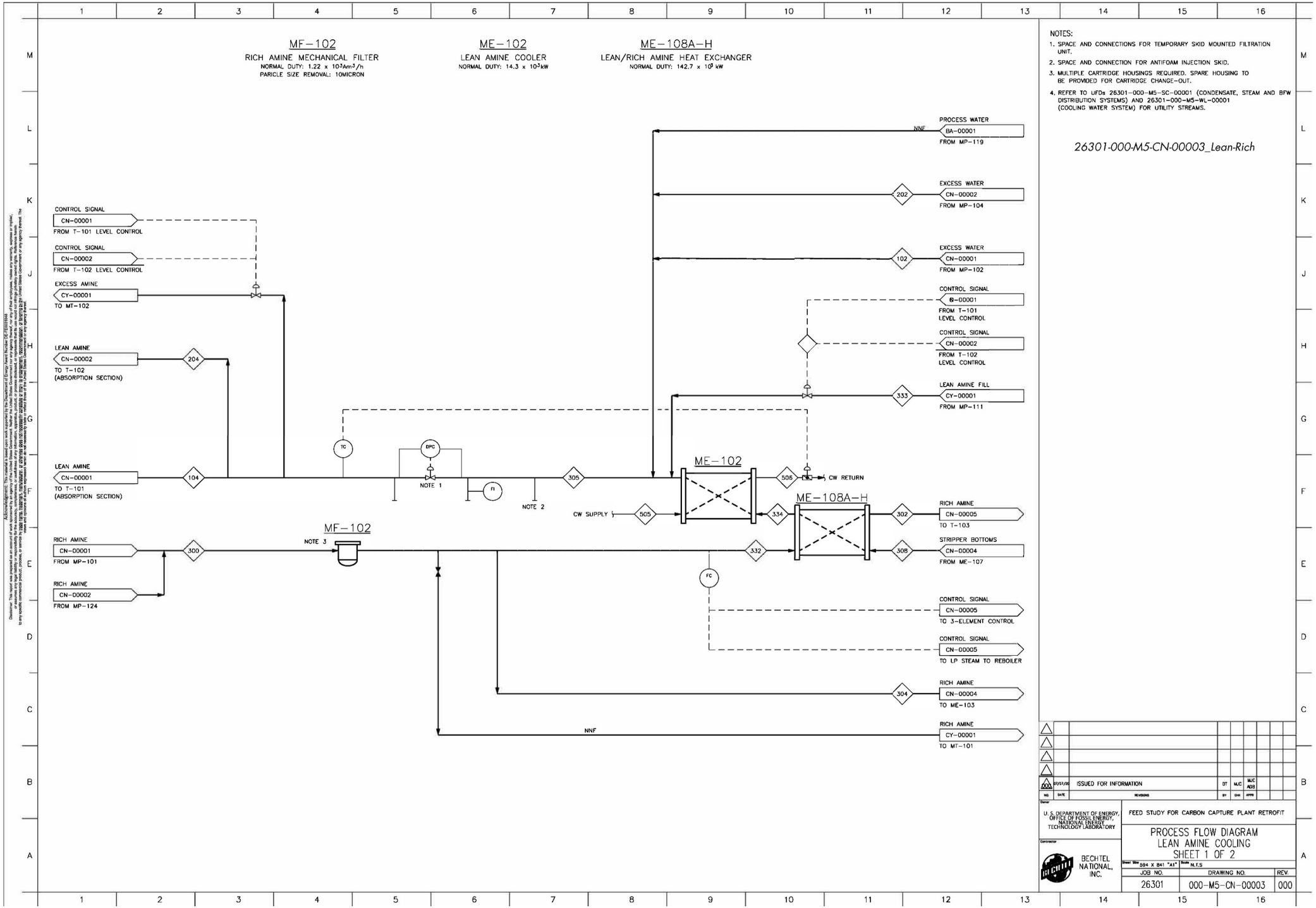

NOTES:

1. SPACE AND CONNECTIONS FOR TEMPORARY SKID MOUNTED FILTRATION UNIT.
2. SPACE AND CONNECTION FOR ANTIFOAM INJECTION SKID.
3. MULTIPLE CARTRIDGE HOUSINGS REQUIRED. SPARE HOUSING TO BE PROVIDED FOR CARTRIDGE CHANGE-OUT.
4. REFER TO UFDs 26301-000-M5-SC-00001 (CONDENSATE, STEAM AND BFW DISTRIBUTION SYSTEMS) AND 26301-000-M5-WL-00001 (COOLING WATER SYSTEM) FOR UTILITY STREAMS.

26301-000-M5-CN-00003_Lean-Rich

ME−103A/B
SEMI−LEAN/RICH AMINE HEAT EXCHANGER
NORMAL DUTY: 29.6 x 10^3kW

ME−107
FLASH FEED HEAT EXCHANGER
NORMAL DUTY: 20.5 x 10^3kW

ME−109
FLASH FEED HEATER
NORMAL DUTY: 5.23 x 10^3kW

MV−201
SEMI−LEAN AMINE FLASH DRUM

NOTES:
1. REFER TO UFDs 26301−000−M5−SC−00001 (CONDENSATE, STEAM AND BFW DISTRIBUTION SYSTEMS) AND 26301−000−M5−WL−00001 (COOLING WATER SYSTEM) FOR UTILITY STREAMS.

26301-000-M5-CN-00004

CONTROL SIGNAL
CN−00005
TO LP STEAM TO REBOILER

ILP STEAM
QC−00001
FROM ME−112/ ME−114/ME−116

STRIPPER BOTTOMS
CN−00003
TO ME−108

RICH AMINE
CN−00003
FROM MF−102

SEMI−LEAN AMINE
CN−00001
TO T−101 (ABSORPTION SECTION)

SEMI−LEAN AMINE
CN−00002
TO T−102 (ABSORPTION SECTION)

LP CONDENSATE

FLASH GAS
CN−00005
TO T−103

STRIPPER BOTTOMS
CN−00005
FROM MF−105

CONTROL SIGNAL
CN−00001
TO SEMI−LEAN AMINE TO T−101

CONTROL SIGNAL
CN−00002
TO SEMI−LEAN AMINE TO T−102

MP−106 A/B

MP−106 A/B
FLASH DRUM PUMP
NORMAL CAPACITY: 491 Am^3/h

NO.	DATE	REVISIONS	BY	CHK	APPR
1	07/31/08	ISSUED FOR INFORMATION	DT	MJC	MJC ACB

Owner: U.S. DEPARTMENT OF ENERGY, OFFICE OF FOSSIL ENERGY, NATIONAL ENERGY TECHNOLOGY LABORATORY

Contractor: BECHTEL NATIONAL, INC.

FEED STUDY FOR CARBON CAPTURE PLANT RETROFIT

PROCESS FLOW DIAGRAM
LEAN AMINE COOLING
SHEET 2 OF 2

Sheet Size: 594 X 841 "A1" | Scale: N.T.S

JOB NO.	DRAWING NO.	REV.
26301	000−M5−CN−00004	000

Disclaimer: This report was prepared as an account of work sponsored by an agency of the United States Government. Neither the United States Government nor any agency thereof, nor any of their employees, makes any warranty, express or implied, or assumes any legal liability or responsibility for the accuracy, completeness, or usefulness of any information, apparatus, product, or process disclosed, or represents that its use would not infringe privately owned rights. Reference herein to any specific commercial product, process, or service by trade name, trademark, manufacturer, or otherwise does not necessarily constitute or imply its endorsement, recommendation, or favoring by the United States Government or any agency thereof. The views and opinions of authors expressed herein do not necessarily state or reflect those of the United States Government or any agency thereof.

Publication Agreement: This material is based upon work supported by the Department of Energy Award Number DE-FE0031548.

MF−105A/B
LEAN AMINE MECHANICAL FILTER
NORMAL FLOW: 1.92 x $10^3 Am^3/h$
PARTICLE SIZE REMOVAL: 10 MICRON

T−103
STRIPPER
INTERNAL DIAMETER: 6.67 m
LENGTH T/T: 40.5 m
PACKING TYPE: STRUCTURED PACKING
PACKING MATERIAL: SS

ME−111A−D
OVERHEAD STRIPPER CONDENSER
NORMAL DUTY: 57.9 x 10^3kW

ME−110A−H
STRIPPER REBOILER
NORMAL DUTY: 125.5 x 10^3kW

MV−202
STRIPPER REFLUX DRUM

NOTES:
1. ANALYSER TO CHECK CONTAMINANTS RECYCLING TO THE SURGE WATER TANK MT−104.
2. REBOILER DUTY CONTROL TO BE CONFIRMED WITH EXCHANGER VENDOR IN NEXT PROJECT PHASE.
3. REFER TO UFDs 26301−000−M5−SC−00001 (CONDENSATE, STEAM AND BFW DISTRIBUTION SYSTEMS) AND 26301−000−M5−WL−00001 (COOLING WATER SYSTEM) FOR UTILITY STREAMS.

26301-000-M5-CN-00005_Stripper

COMPRESSOR FIRST STAGE RECYCLE
QG−00001
FROM MC−103A

CONTROL SIGNAL
CN−00001
FROM LEAN AMINE FLOW TO T−101

CONTROL SIGNAL
CN−00002
FROM LEAN AMINE FLOW TO T−102

CONTROL SIGNAL
CN−00003
FROM RICH AMINE FLOW TO ME−108

RICH AMINE
CN−00003
FROM ME−108

FLASH GAS
CN−00004
FROM MV−201

VAPORS RETURN
CN−00006
FROM MS−102

STRIPPER BOTTOMS
CN−00004
TO ME−107

STRIPPER BOTTOMS
CN−00006
TO MS−102

CW RETURN
CW SUPPLY
COMPOSITION
NOTE 1
NOTE 2
CO2
QG−00001
TO MV−203

RELUX PURGE
BA−00001
TO MT−104

LP CONDENSATE
LP STEAM

CONTROL SIGNAL
CN−00004
FROM RICH AMINE FLOW TO ME−103

CONTROL SIGNAL
CN−00003
FROM RICH AMINE FLOW TO ME−108

MP−105A/B
LEAN AMINE PUMP
NORMAL CAPACITY: 1.92 x $10^3 Am^3/h$

MP−107 A/B
REFLUX PUMP
NORMAL CAPACITY: 82 Am^3/h

NO.	DATE	REVISIONS	BY	CHK	APPR
01/31/06		ISSUED FOR INFORMATION	DT	MJC	MJC ADB

Owner: U.S. DEPARTMENT OF ENERGY, OFFICE OF FOSSIL ENERGY, NATIONAL ENERGY TECHNOLOGY LABORATORY

Contractor: BECHTEL NATIONAL, INC.

FEED STUDY FOR CARBON CAPTURE PLANT RETROFIT

PROCESS FLOW DIAGRAM
STRIPPER

Sheet Size 594 X 841 "A1" | Scale N.T.S

JOB NO.	DRAWING NO.	REV.
26301	000−M5−CN−00005	000

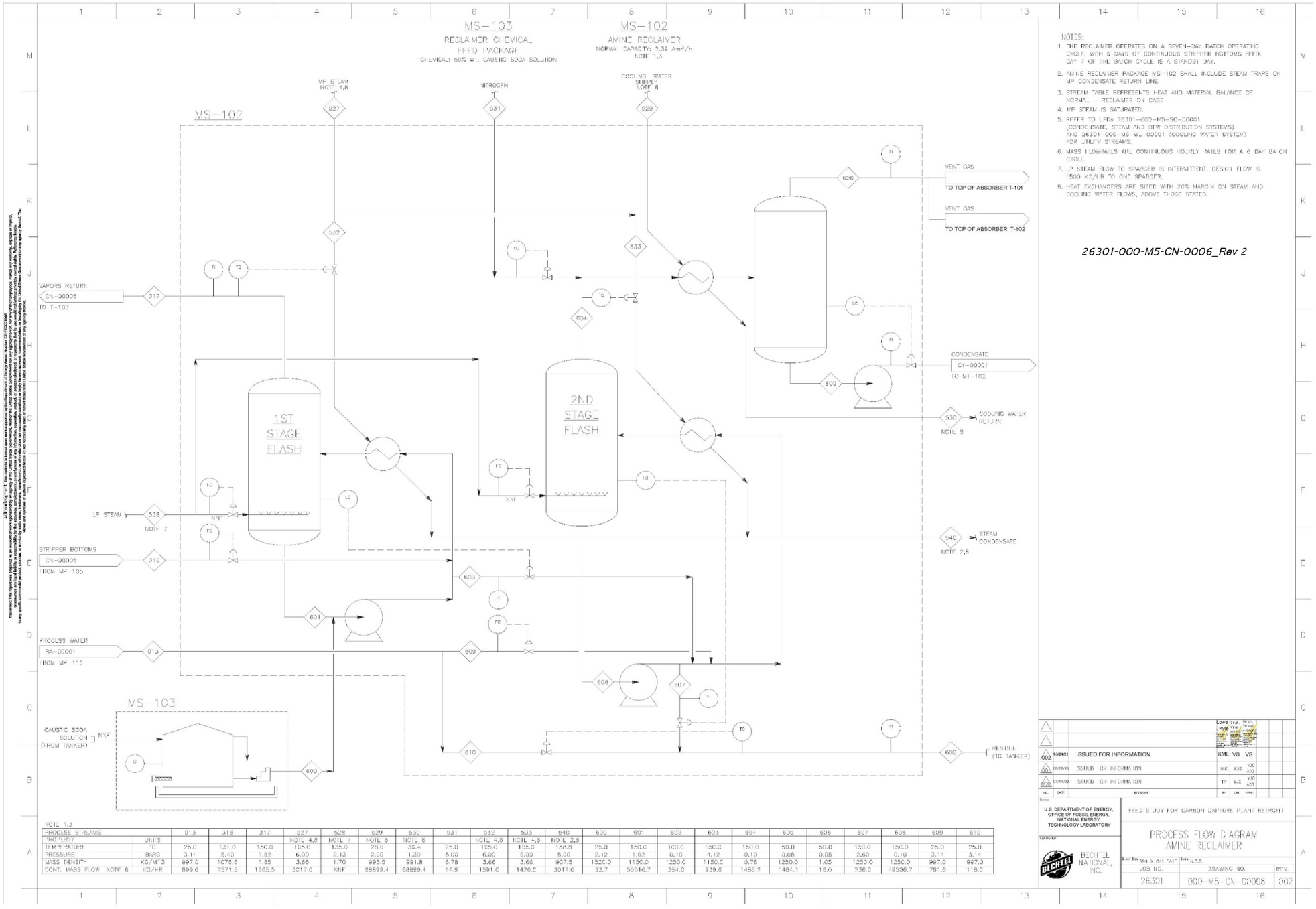

NOTES:

1. THE RECLAIMER OPERATES ON A SEVEN-DAY BATCH OPERATING CYCLE, WITH 6 DAYS OF CONTINUOUS STRIPPER BOTTOMS FEED. DAY 7 OF THE BATCH CYCLE IS A STANDBY DAY.
2. AMINE RECLAIMER PACKAGE MS-102 SHALL INCLUDE STEAM TRAPS ON MP CONDENSATE RETURN LINE.
3. STREAM TABLE REPRESENTS HEAT AND MATERIAL BALANCE OF NORMAL RECLAIMER ON CASE.
4. MP STEAM IS SATURATED.
5. REFER TO LFDs 26301-000-M5-SC-00001 (CONDENSATE, STEAM AND BFW DISTRIBUTION SYSTEMS) AND 26301-000-M5-WL-00001 (COOLING WATER SYSTEM) FOR UTILITY STREAMS.
6. MASS FLOWRATES ARE CONTINUOUS HOURLY RATES FOR A 6 DAY BATCH CYCLE.
7. LP STEAM FLOW TO SPARGER IS INTERMITTENT. DESIGN FLOW IS 1500 KG/HR TO ONE SPARGER.
8. HEAT EXCHANGERS ARE SIZED WITH 20% MARGIN ON STEAM AND COOLING WATER FLOWS, ABOVE THOSE STATED.

26301-000-M5-CN-0006_Rev 2

NO.	DATE	REVISIONS	BY	CHK	APPD
002	03/24/21	ISSUED FOR INFORMATION	KML	VS	VS
001	09/28/20	ISSUED FOR INFORMATION	MJC	ADJ	VJC ADJ
000	07/14/20	ISSUED FOR INFORMATION	DT	MJC	VJC ADJ

Owner: U.S. DEPARTMENT OF ENERGY, OFFICE OF FOSSIL ENERGY, NATIONAL ENERGY TECHNOLOGY LABORATORY

Contractor: BECHTEL NATIONAL, INC.

FEED STUDY FOR CARBON CAPTURE PLANT RETROFIT

PROCESS FLOW DIAGRAM
AMINE RECLAIMER

Sheet Size: 594 X 841 "A1" | Scale: N.T.S.

JOB NO.	DRAWING NO.	REV.
26301	000-M5-CN-00006	002

NOTE 1,3

PROCESS STREAMS		013	316	317	527	528	529	530	531	532	533	540	600	601	602	603	604	605	606	607	608	609	610
PROPERTY	UNITS				NOTE 4,8	NOTE 7	NOTE 8	NOTE 8		NOTE 4,8	NOTE 4,8	NOTE 2,8											
TEMPERATURE	°C	25.0	131.0	150.0	165.0	135.0	28.6	38.4	25.0	165.0	165.0	158.8	25.0	150.0	100.0	150.0	150.0	50.0	50.0	150.0	150.0	25.0	25.0
PRESSURE	BARG	3.14	5.40	1.82	6.00	2.13	2.00	1.30	5.00	6.00	6.00	5.00	2.12	1.62	0.10	4.12	0.10	0.05	0.05	2.60	0.10	3.14	3.14
MASS DENSITY	KG/M^3	997.0	1078.8	1.85	3.66	1.70	995.5	991.8	6.75	3.66	3.66	907.5	1520.0	1150.0	1250.0	1150.0	0.76	1250.0	1.05	1250.0	1250.0	997.0	997.0
CONT. MASS FLOW NOTE 6	KG/HR	899.6	2571.5	1865.5	3017.0	NNF	88899.4	68899.4	14.9	1591.0	1426.0	3017.0	33.7	55516.7	354.0	939.6	1485.2	1484.1	18.0	236.0	49506.7	781.6	118.0

MT-101
RICH AMINE STORAGE TANK

MT-102
LEAN AMINE SOLVENT
STORAGE TANK

NOTES:
1. REFER TO UFDs 26301-000-M5-SC-00001 (CONDENSATE, STEAM AND BFW DISTRIBUTION SYSTEMS) AND 26301-000-M5-WL-00001 (COOLING WATER SYSTEM) FOR UTILITY STREAMS.

26301-000-M5-CY-00001

N_2

FRESH AMINE
(FROM TANKER)
307

SOFTENED WATER/
DISTILLATE FROM ZLD
011

EXCESS AMINE
CN-00003
FROM ME-102

PROCESS WATER
BA-00001
FROM MP-119
012

MT-102

MP-111A/B

333
LEAN AMINE FILL
CN-00003
TO T-101/T-102
(ABSORPTION SECTION)

FC
NNF
RICH AMINE
CN-00001
TO MP-101

AMINE RETURN
CN-00002
FROM SUMP

RICH AMINE
CN-00003
FROM MF-102
NNF

MT-101

MP-111A/B
LEAN AMINE SOLVENT FILL PUMP
NORMAL CAPACITY: 74.2 NM3/H

NO.	DATE	REVISIONS	BY	CHK	APPD
0	09/01/06	ISSUED FOR INFORMATION	DT	MJC	MJC AGD

U.S. DEPARTMENT OF ENERGY, OFFICE OF FOSSIL ENERGY, NATIONAL ENERGY TECHNOLOGY LABORATORY

FEED STUDY FOR CARBON CAPTURE PLANT RETROFIT

PROCESS FLOW DIAGRAM
RICH & LEAN AMINE STORAGE

BECHTEL NATIONAL, INC.

Sheet Size 594 X 841 "A1" | Scale N.T.S

JOB NO.	DRAWING NO.	REV.
26301	000-M5-CY-00001	000

Disclaimer: This report was prepared as an account of work sponsored by the Department of Energy/ Award Number DE-FE0000568. Neither the United States Government nor any agency thereof, nor any of their employees, makes any warranty, express or implied, or assumes any legal liability or responsibility for the accuracy, completeness, or usefulness of any information, apparatus, product, or process disclosed, or represents that its use would not infringe privately owned rights. Reference herein to any specific commercial product, process, or service by trade name, trademark, manufacturer, or otherwise does not necessarily constitute or imply its endorsement, recommendation, or favoring by the United States Government or any agency thereof. The views and opinions of authors expressed herein do not necessarily state or reflect those of the United States Government or any agency thereof.

EQUIPMENT SYMBOLS

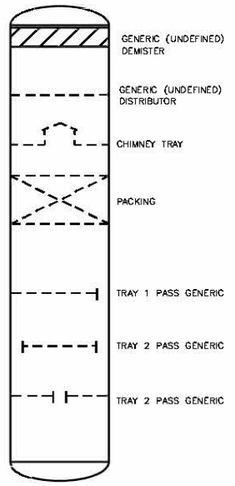

COLUMN

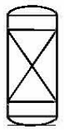
PACKED FILTER


VERTICAL VESSEL


HORIZONTAL VESSEL

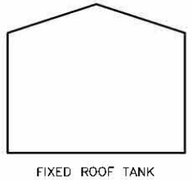
FIXED ROOF TANK

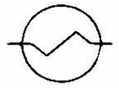
SHELL AND TUBE HEAT EXCHANGER

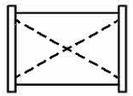
PLATE HEAT EXCHANGER


CENTRIFUGAL PUMP


BLOWER

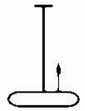
SUMP PUMP


METERING PUMP

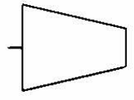
CENTRIFUGAL COMPRESSOR

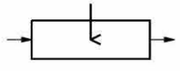
SPRAY NOZZLE



DRIVES TYPE BY XX

E: ELECTRICAL
H: HYDRAULIC
P: PNEUMATIC


CARTRIDGE FILTER

VALVES


GATE VALVE OPEN


GATE VALVE CLOSED


GLOBE VALVE


BUTTERFLY VALVE


CHECK VALVE


CONTROL VALVE ACTUATOR DIAPHRAM


PRESSURE REDUCER REGULATOR

FLUID CODES

FLG – FLUE GAS

LP – LOW PRESSURE STEAM / CONDENSATE

ILP – INTERSTAGE LOW PRESSURE STEAM

MP – MEDIUM PRESSURE STEAM / CONDENSATE

CW – COOLING WATER

BFW – BOILER FEED WATER

PW – PROCESS WATER

INSTRUMENTS


LOG OR SEQUENCE CONTROLLER



GENERAL SYMBOL



ANALYZER

THE LETTER 'A' DENOTES ANALYSIS VARIABLES

NOTE 1



VARIABLE FREQUENCY DEVICE

EQUIPMENT IDENTIFICATION LETTERS

ME – EXCHANGERS

MF – FILTERS

MC – COMPRESSORS

MA – BLOWERS

MP – PUMPS

T – COLUMNS

MT – TANKS

MV – VESSELS

MS – MISCELLANEOUS/VENDOR PACKAGE

OFF–PAGE CONTROLLER

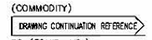

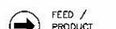

BL – BATTERY LIMIT

STREAM NUMBER



XXX – STREAM NUMBER – MASS AND HEAT BALANCE

INSTRUMENT IDENTIFICATION LETTERS

	FIRST LETTERS	SUCCEEDING LETTERS			
	MEASURED OR INITIATING VARIABLE	MODIFIER	READOUT OR PASSIVE FUNCTION	OUTPUT FUNCTION	MODIFIER
A	ANALYSIS		ALARM		
B	BURNER/COMBUSTION		USER'S CHOICE	USER'S CHOICE	USER'S CHOICE
C	CONDUCTIVITY (ELECTRICAL)			CONTROL	CLOSED/OFF
D	DENSITY OR SPECIFIC GRAVITY	DIFFERENTIAL			DIVERT
E	VOLTAGE		SENSOR (PRIMARY ELEMENT)		
F	FLOW	RATIO (FRACTION)			
G	GAUGING (DIMENSIONAL)		GLASS VIEWING DEVICE		
H	HAND (MANUAL)				HIGH/OPEN/ON
I	CURRENT (ELECTRICAL)		INDICATE		
J	POWER (ELECTRICAL)				
K	TIME, SEQUENTIAL	TIME RATE OF CHARGE			
L	LEVEL		LIGHT		LOW/CLOSED/OFF
M	MOISTURE/HUMIDITY	MOMENTARY			
N	NUMERICAL VALUE		USER'S CHOICE	USER'S CHOICE	USER'S CHOICE
O	YIELD		ORIFICE, RESTRICTION		OPEN/ON
P	PRESSURE, VACUUM		POINT (TEST) CONNECTION		
Q	QUANTITY/NUMBER	INTEGRATE, TOTALIZE			
R	RADIATION/LIGHT/RADIO		RECORD, PRINT		
S	SPEED OR FREQUENCY	SAFETY		SWITCH	
T	TEMPERATURE			TRANSMIT	THROUGH
U	MULTIVARIABLE		MULTIFUNCTION	MULTIFUNCTION	MULTIFUNCTION
V	VISCOSITY, VIBRATION			VALVE, DAMPER, LOUVER	
W	WEIGHT, FORCE		WELL/PROBE		
X	UNCLASSIFIED	X AXIS	UNCLASSIFIED	UNCLASSIFIED	UNCLASSIFIED
Y	EVENT/STATE	Y AXIS		RELAY, COMPUTE, CONVERT	
Z	POSITION	Z AXIS		DRIVER, ACTUATOR UNCLASSIFIED FINAL CONTROL ELEMENT	

HEATING & COOLING ELEMENTS

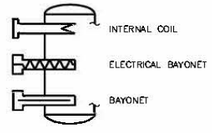

NOTES:

1. THE LETTER 'A' IS USED FOR ANALYSIS VARIABLES. THE FOLLOWING TERM IS PLACED OUTSIDE THE INSTRUMENT CIRCLE TO DENOTE THE SPECIFIC VARIABLE.

   CO_2 – CARBON DIOXIDE

26301-000-M5J-YA-00001

NO.	DATE	REVISIONS	BY	CHK	APPR
0	8/19/09	ISSUED FOR INFORMATION	DT	NJC	NJC ADD

Owner: U.S. DEPARTMENT OF ENERGY, OFFICE OF FOSSIL ENERGY, NATIONAL ENERGY TECHNOLOGY LABORATORY

Contractor: BECHTEL NATIONAL, INC.

FEED STUDY FOR CARBON CAPTURE PLANT RETROFIT

PFD SYMBOLS AND LEGENDS

Sheet Size: 594 X 841 "A1" | Scale: N.T.S

JOB NO.	DRAWING NO.	REV.
26301	000-M5J-YA-00001	000

Disclaimer: This report was prepared as an account of work sponsored by the Department of Energy Award Number DE-FE0031584. Neither the United States Government nor any agency thereof, nor any of their employees, makes any warranty, express or implied, or assumes any legal liability or responsibility for the accuracy, completeness, or usefulness of any information, apparatus, product, or process disclosed, or represents that its use would not infringe privately owned rights. Reference herein to any specific commercial product, process, or service by trade name, trademark, manufacturer, or otherwise does not necessarily constitute or imply its endorsement, recommendation, or favoring by the United States Government or any agency thereof. The views and opinions of authors expressed herein do not necessarily state or reflect those of the United States Government or any agency thereof.

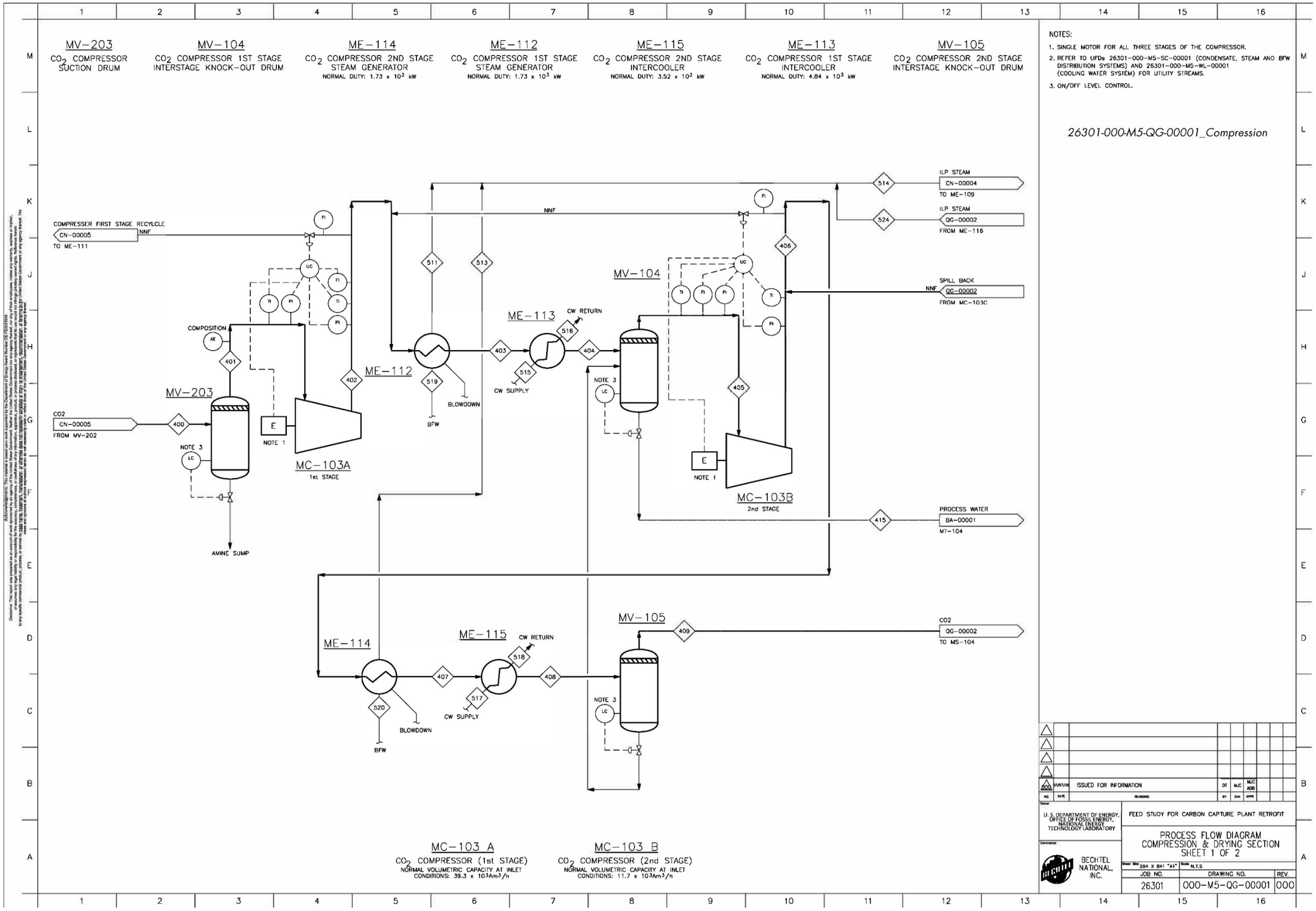

NOTES:

1. SINGLE MOTOR FOR ALL THREE STAGES OF THE COMPRESSOR.
2. REFER TO UFDs 26301-000-M5-SC-00001 (CONDENSATE, STEAM AND BFW DISTRIBUTION SYSTEMS) AND 26301-000-M5-WL-00001 (COOLING WATER SYSTEM) FOR UTILITY STREAMS.
3. ON/OFF LEVEL CONTROL.

26301-000-M5-QG-00001_Compression

NO.	DATE	REVISIONS	BY	CHK	APPR
000	07/07/20	ISSUED FOR INFORMATION	DT	MJC	MJC ADB

Owner: U. S. DEPARTMENT OF ENERGY, OFFICE OF FOSSIL ENERGY, NATIONAL ENERGY TECHNOLOGY LABORATORY

Contractor: BECHTEL NATIONAL, INC.

FEED STUDY FOR CARBON CAPTURE PLANT RETROFIT

PROCESS FLOW DIAGRAM
COMPRESSION & DRYING SECTION
SHEET 1 OF 2

Sheet Size 594 X 841 "A1" Scale N.T.S

JOB NO.	DRAWING NO.	REV.
26301	000-M5-QG-00001	000

MS−104
CO_2 DRYING PACKAGE
NORMAL FLOW RATE: 2.91 x $10^3 Am^3/h$

ME−116
CO_2 COMPRESSOR 3RD STAGE STEAM GENERATOR
NORAML DUTY: 2.02 x 10^3 kW

ME−117
CO_2 COOLER
NORAML DUTY: 6.02 x 10^3 kW

MV−106
CO_2 SURGE DRUM

ME−118
CO_2 PRODUCT COOLER
NORAML DUTY: 4.23 x 10^3 kW

NOTES:
1. DRYING PACKAGE CONSISTS OF ONE DRUM ON−LINE AND ONE DRUM ON REGENERATION.
2. SINGLE MOTOR FOR ALL THREE STAGES OF THE COMPRESSOR.
3. REFER TO UFDs 26301−000−M5−SC−00001 (CONDENSATE, STEAM AND BFW DISTRIBUTION SYSTEMS) AND 26301−000−M5−WL−00001 (COOLING WATER SYSTEM) FOR UTILITY STREAMS.

26301-000-M5-QG-00002_Compression

CO2 FROM QG−00001 MV−105
409
COMPOSITION
AE
TI
PI
FI
411
UC
NOTE 1
MS−104
417
DRYER WATER
410
NOTE 2
E
MC−103C
3rd STAGE
ME−116
521
BLOWDOWN
BFW
412
ME−117
CW RETURN
523
522
CW SUPPLY
413
416
PC
DEPRESSURIZATION TO STACK
SPILL BACK
NNF
QG−00001
MC−103B
MV−106
524
ILP STEAM
QG−00001
ME−109
ME−118
CW RETURN
542
414
418
FC
CO2 PRODUCT
541
CW SUPPLY
MP−108 A/B

MC−103 C
CO_2 COMPRESSOR (3rd STAGE)
NORAML VOLUMETRIC CAOACITY AT INLET CONDITIONS: 2.95 x 10^3 Am^3/h

MP−108 A/B
CO_2 PRODUCT SENDOUT PUMP
NORAML CAPACITY: 368 Am^3/h

NO.	DATE	REVISIONS	BY	CHK	APPR
0	07/27/20	ISSUED FOR INFORMATION	DT	MJC	MJC ADB

Owner: U.S. DEPARTMENT OF ENERGY, OFFICE OF FOSSIL ENERGY, NATIONAL ENERGY TECHNOLOGY LABORATORY

FEED STUDY FOR CARBON CAPTURE PLANT RETROFIT

PROCESS FLOW DIAGRAM
COMPRESSION & DRYING SECTION
SHEET 2 OF 2

Contractor: BECHTEL NATIONAL, INC.

Sheet Size 594 X 841 "A1" | Scale N.T.S

JOB NO.	DRAWING NO.	REV.
26301	000−M5−QG−00002	000

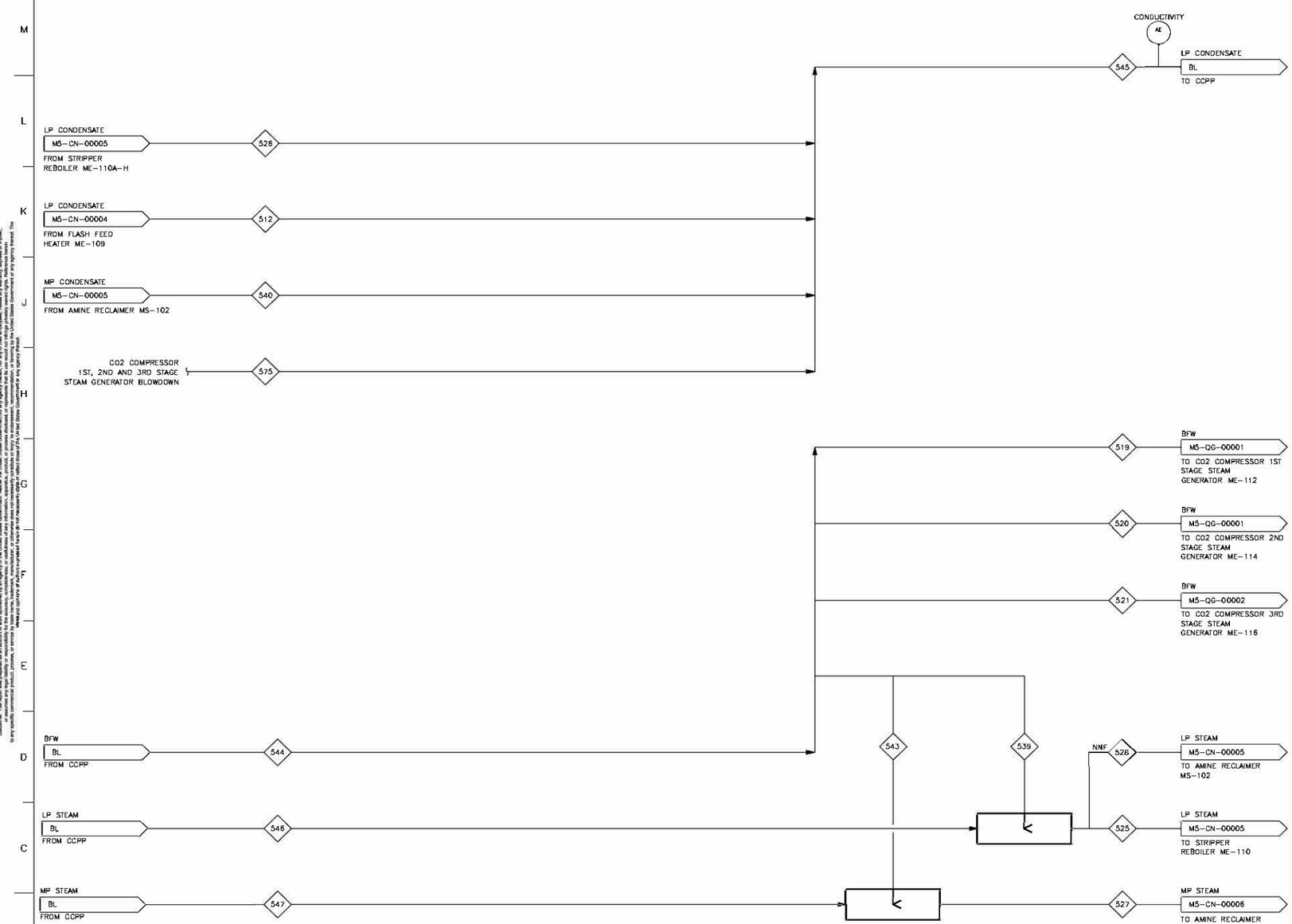

NOTES:

1. WHEN RECLAIMER MS-102 IS OPERATING, THE DESUPERHEATED MP STEAM CONSUMPTION AND CONDENSATE DISCHARGE IS 2388 KG/HR, BFW CONSUMPTION IS 225 KG/H
2. MP STEAM SHALL BE DESUPERHEATED PRIOR TO ENTRY TO RECLAIMER MS-102.
3. THE CONDITIONS (P@T) ARE AT CONSUMING/PRODUCING EQUIPMENT, NOT BATTERY LIMIT.
4. LP STEAM FLOWRATE TO RECLAIMER IS 1410 KG/H FOR 12 HOURS PER WEEK.

26301-000-M5-SC-00001_UFD

PROCESS STREAMS		512	519	520	521	525	526	527	528	539	540	543	544	545	546	547	575
PROPERTY	UNITS		NOTE 3	NOTE 3	NOTE 3			NOTES 1,2	NOTES 4	NOTE 3	NOTE 1	NOTES 1,2	NOTE 1	NOTE 1	NOTE 4	NOTE 1	
TEMPERATURE	°C	125.8	98.9	98.9	98.9	135.0	135.0	–	–	122.0	–	–	122.0	134.7	270.0	270.0	125.8
PRESSURE	BARG	1.38	1.68	1.68	1.68	2.13	2.13	–	–	8.00	–	–	10.00	0.50	2.13	6.00	1.38
MASS DENSITY	KG/M^3	938.9	941.0	941.0	941.0	1.7	931.0	–	–	941.0	–	–	941.4	931.3	1.26	2.85	938.9
MASS FLOW	KG/HR	8503	2679	2685	3140	208042	208042	0	0	23451	0	0	32006	217103	184591	0	100

NO.	DATE	REVISIONS	BY	CHK	APPR
000	07/16/12	ISSUED FOR INFORMATION	DT	MJC	MJC ADB

Owner: U.S. DEPARTMENT OF ENERGY, OFFICE OF FOSSIL ENERGY, NATIONAL ENERGY TECHNOLOGY LABORATORY

Contractor: BECHTEL NATIONAL, INC.

FEED STUDY FOR CARBON CAPTURE PLANT RETROFIT

PROCESS FLOW DIAGRAM
CONDENSATE, STEAM AND BFW WATER DISTRIBUTION SYSTEMS

Sheet Size 594 X 841 "A1" Scale N.T.S

JOB NO.	DRAWING NO.	REV.
26301	000-M5-SC-00001	000

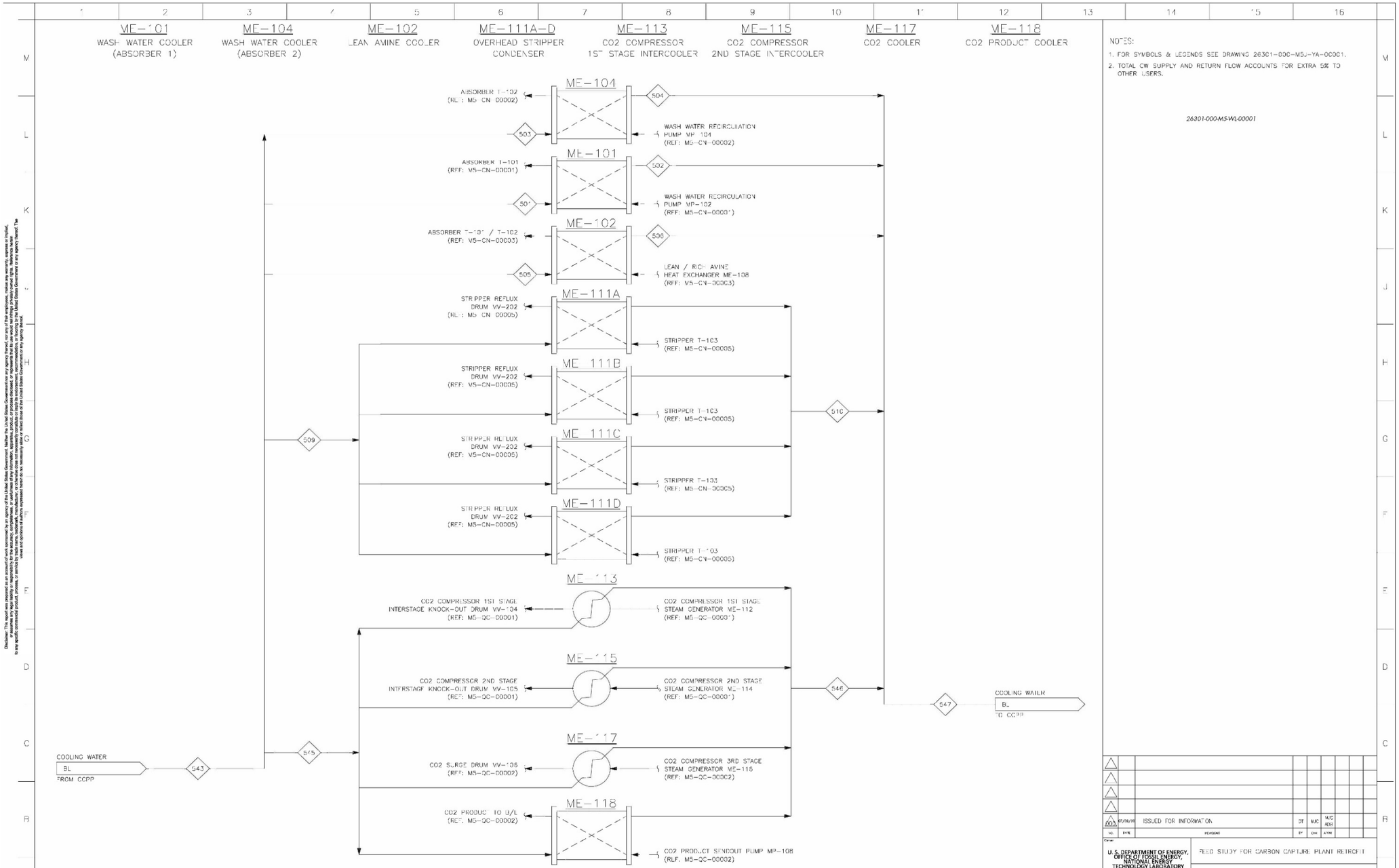

NOTES:

1. FOR SYMBOLS & LEGENDS SEE DRAWING 26301-000-M5J-YA-00001.
2. TOTAL CW SUPPLY AND RETURN FLOW ACCOUNTS FOR EXTRA 5% TO OTHER USERS.

26301-000-M5-WL-00001

PROCESS STREAMS		501	502	503	504	505	506	509	510	543	545	546	547
PROPERTY	UNITS									NOTE 2			NOTE 2
TEMPERATURE	°C	28.6	39.4	28.6	39.4	28.6	39.4	28.6	39.4	28.6	28.6	39.4	39.4
PRESSURE	BARG	2.0	1.3	2.0	1.3	2.0	1.3	2.0	1.0	2.0	2.0	1.0	1.0
MASS DENSITY	KG/M^3	995.5	991.8	995.5	991.8	995.5	991.8	995.5	991.8	995.5	995.5	991.8	991.8
MASS FLOW	KG/HR	2046343	2046343	2046343	2046343	1144167	1144167	4636921	4636921	11958344	1515125	1515125	11958344

NO.	DATE	REVISIONS	BY	CHK	APPR
000	07/09/10	ISSUED FOR INFORMATION	DT	MJC	MJC ADR

Client: U. S. DEPARTMENT OF ENERGY, OFFICE OF FOSSIL ENERGY, NATIONAL ENERGY TECHNOLOGY LABORATORY

Contractor: BECHTEL NATIONAL, INC.

FEED STUDY FOR CARBON CAPTURE PLANT RETROFIT

PROCESS FLOW DIAGRAM
COOLING WATER SYSTEM

Sheet Size 594 X 841 "A1" Scale N.T.S

JOB NO.	DRAWING NO.	REV.
26301	000-M5-WL-00001	000

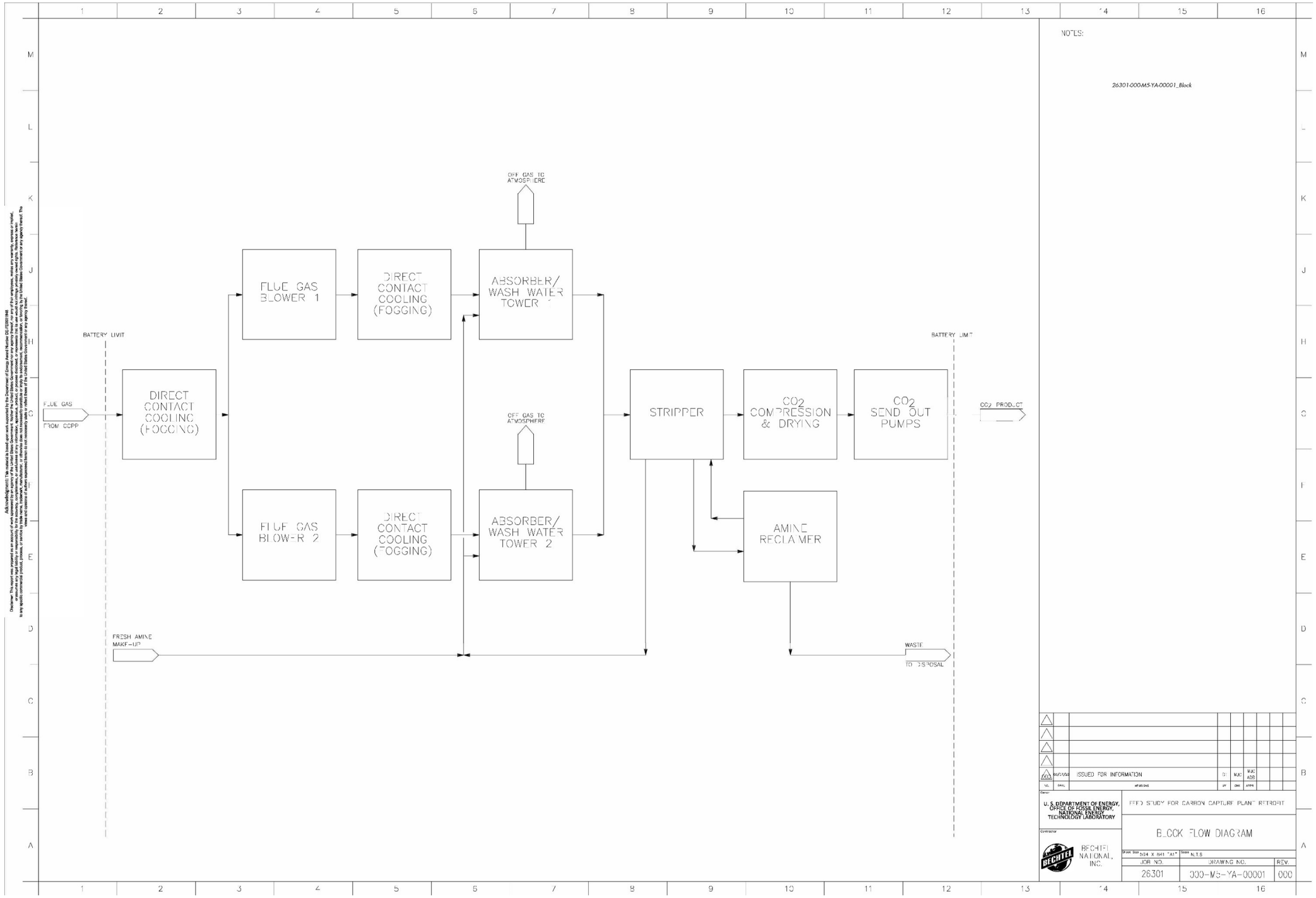
NOTES:
26301-000-M5-YA-00001_Block
BATTERY LIMIT
FLUE GAS
FROM CCPP
DIRECT CONTACT COOLING (FOGGING)
FLUE GAS BLOWER 1
DIRECT CONTACT COOLING (FOGGING)
ABSORBER/ WASH WATER TOWER 1
OFF GAS TO ATMOSPHERE
FLUE GAS BLOWER 2
DIRECT CONTACT COOLING (FOGGING)
ABSORBER/ WASH WATER TOWER 2
OFF GAS TO ATMOSPHERE
STRIPPER
CO2 COMPRESSION & DRYING
CO2 SEND OUT PUMPS
BATTERY LIMIT
CO2 PRODUCT
AMINE RECLAIMER
FRESH AMINE MAKE-UP
WASTE
TO DISPOSAL
ISSUED FOR INFORMATION
U. S. DEPARTMENT OF ENERGY, OFFICE OF FOSSIL ENERGY, NATIONAL ENERGY TECHNOLOGY LABORATORY
FEED STUDY FOR CARBON CAPTURE PLANT RETROFIT
BLOCK FLOW DIAGRAM
BECHTEL NATIONAL, INC.
N.T.S
JOB NO.
26301
DRAWING NO.
000-M5-YA-00001
REV.
000

Makeup Water from Lake Texoma
Lake Water
1
Raw Water Storage Pond
2
3
Raw Water Clarifier
4
Gravity Filter
5
6
12
7
Sludge Thickener
11
8
9
Raw Water Filter Press
10
Solids to Off-site Disposal
Fire Water Users
13
Service / Fire Water Storage Tank
14
34
40
From O/W Separator
F Effluent
16
Evaporation and Drift
19
From Distillate Storage Tank
C Distillate
32
Cooling Tower
49
45
42
18
From Neutralization Tank
G Waste Water
38
20
To Cooling Tower Blowdown Tank
B Blowdown
From Demineralization Trailers
H RO Reject
58
47
To Blowdown System
A Quench Water
Evaporation
43
41
Evaporative Coolers
42
Blowdown
39
Sludge to Off-site Disposal
17
O/W Separator
15
Service Water Users
16
To Cooling Tower Basin
F Effluent
From Distillate Collection Tank
D Distillate
33
57
Demineralization Trailers (Reverse Osmosis—RO)
35
Demineralized Water Storage Tank
54
To Aux Boiler
Demin Water
44
58
To Cooling Tower Basin
H RO Reject
36
Condensate from PCC
From Sheet 2
Condensate Polisher
HRSG/ Steam Cycle
45
Sampling and Miscellaneous Losses
37
BFW to PCC
To Sheet 2
LP Steam to PCC
To Sheet 2
Neutralization Tank
38
To Cooling Tower Basin
G Waste Water
46
Vent Losses
22
Vent Losses
26
From Cooling Tower
B Blowdown
20
Cooling Tower Blowdown Tank
21
Brine Concentrator
24
Crystallizer Feed Tank
25
Crystallizer
28
Filter Press
29
Solids to Off-site Disposal
From Aux Boiler
Steam
53
60
30
27
59
Filtrate Purge
23
31
Distillate Collection Tank
32
C Distillate
To Cooling Tower Basin
33
To Demineralization Trailers
D Distillate
From Cooling Tower Basin
A Quench Water
47
Blowdown System
48
Vent to Atmosphere
49
From the City
Potable Water
56
Potable Water Users
51
Sanitary Users
52
To the City
Sanitary Waste
75
To PCC

Rev	Date	Reason for Revision	Resp. Engr.	Checker	EGS	Project Engineer
			Sanjay, Vinay (vxsingh)	Singh, Vinay (vxsingh)		Singh, Vinay (vxsingh)
001	03/29/21	ISSUED FOR USE—UPDATED WATER SOURCE FOR PCC	Hyland bad			
000	10/30/20	ISSUED FOR USE	HGS	VS		VS

BECHTEL NATIONAL, INC.

Feed Study for Carbon Capture Plant Retrofit

Water Balance Diagram

26301	DWG. NO. 000-M5-YA-00002	REV. 001	Sheet: 1 of 3

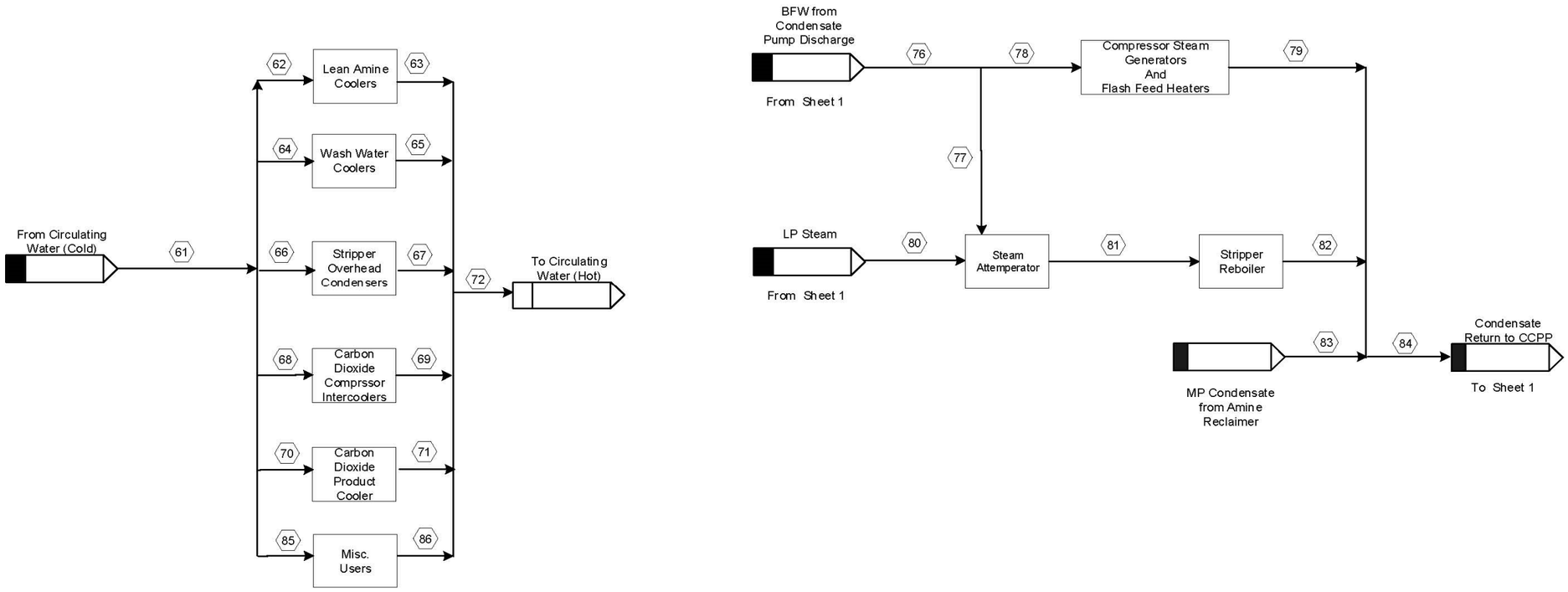

BECHTEL	BECHTEL NATIONAL, INC.		
Feed Study for Carbon Capture Plant Retrofit			
Water Balance Diagram			
JOB NO. 26301	DWG. NO. 000-M5-YA-00002	REV. 001	Sheet: 2 of 3

Water Balance Stream Flow Rate Table			
	Sherman Data Case	Integrated Water Balance	
	Fuel	Gas	
	Loading	100%	
	Dry bulb temperature, °F	95 °F	
	Relative Humidity, %	43%	
	Wet bulb temperature, °F	74.8 °F	
	Evaporative coolers	ON	
	Duct burners	OFF	
Stream No.	STREAM DESCRIPTION	Flow Rate	Notes
1	Makeup water from Lake Texoma, gpm	3,303.6	
2	Raw water storage pond effluent, gpm	3,303.6	
3	Raw water clarifier influent, gpm	3,378.3	
4	Gravity filter influent, gpm	3,370.7	
5	Service / fire water storage tank influent, gpm	3,303.3	
6	Gravity filter backwash, gpm	67.4	Notes 5 & 15
7	Sludge thickener influent, gpm	7.6	Notes 4 & 15
8	Raw water filter press influent, gpm	3.1	Note 15
9	Raw water filter press filtrate, gpm	2.7	Note 15
10	Filter press filtrate in filter press solids to off-site disposal, gpm	0.3	Note 15
11	Sludge thickener decant, gpm	4.6	Note 15
12	Combined filter press filtrate, sludge thickener decant and gravity filter backwash, gpm	74.7	Note 15
13	Fire water to fire water users, gpm	0.0	Note 3
14	Service water to service water users, gpm	30.0	Notes 6 & 15
15	Oil / Water separator influent, gpm	30.0	Note 15
16	Oil / Water separator effluent to cooling tower basin, gpm	30.0	Note 15
17	Oil / water separator sludge to off-site disposal, gpm	0.0	Notes 3 & 15
18	Service water to cooling tower basin, gpm	3,129.3	
19	Cooling tower evaporation and drift, gpm	2,911.0	Note 7,23
20	Cooling tower blowdown, gpm	415.9	Note 8
21	Brine concentrator influent, gpm	415.9	
22	Brine concentrator vent losses, gpm	6.2	
23	Brine concentrator distillate, gpm	395.4	Note 17
24	Brine concentrator slurry to crystallizer feed tank, gpm	14.3	
25	Crystallizer influent, gpm	14.3	
26	Crystallizer vent losses, gpm	0.0	
27	Crystallizer distillate, gpm	27.2	
28	Crystallizer slurry to filter press, gpm	13.3	Note 15
29	Filter press filtrate in filter press solids to off-site disposal, gpm	0.0	
30	Filter press filtrate, gpm	13.3	Note 15
31	Combined brine concentrator and crystallizer distillate, gpm	422.6	
32	Distillate to cooling tower basin, gpm	0.0	
33	Distillate to demineralization system, gpm	115.6	
34	Service water to demineralization system, gpm	118.0	Note 3
35	Demineralized water to demineralized water storage tank, gpm	175.2	
36	Demineralized water for condensate polisher regeneration, gpm	2.0	Notes 9 & 15
37	Condensate polisher wastewater, gpm	2.0	Note 15
38	Neutralized waste to cooling tower basin, gpm	2.0	Note 15
39	Demineralized water to evaporative coolers, gpm	118.0	Note 18
40	Service water to evaporative coolers, gpm	26.0	Note 18
41	Evaporative cooler influent, gpm	144.0	
42	Evaporative cooler blowdown, gpm	72.0	Note 10
43	Evaporation from evaporative coolers, gpm	72.0	
44	Demineralized water to HRSGs / steam cycles, gpm	42.2	
45	HRSGs / steam cycle sampling and miscellaneous losses, gpm	14.1	Note 11
46	HRSGs / steam cycle blowdown, gpm	28.2	Note 12
47	Quench water to blowdown system, gpm	21.8	Note 13
48	Blowdown vent, gpm	7.3	
49	Quenched HRSG blowdown to cooling tower basin, gpm	42.9	
50	Deleted		
51	Potable water to sanitary users, gpm	1.1	Note 15
52	Sanitary waste to the City, gpm	1.1	Note 15
53	Steam from auxiliary boiler, gpm	13.0	Note 18
54	Demineralized water to auxiliary boiler, gpm	13.0	Note 18
55	Deleted		
56	Potable water from the City, gpm	1.1	Note 15
57	Service water and distillate to demineralization system, gpm	233.6	Note 21
58	Demineralizer system (RO) reject to cooling tower, gpm	58.4	
59	Filtrate Purge from ZLD System, gpm	0.0	Note 20
60	Filtrate recycled to crystallizer system, gpm	13.3	
61	Circulating water (cold) to PCCC for cooling	52,728.0	Note 22
62	Cooling water to lean amine coolers	5,045.0	Note 22
63	Cooling water from lean amine coolers	5,045.0	Note 22
64	Cooling water to wash water coolers	18,046.0	Note 22
65	Cooling water from wash water coolers	18,046.0	Note 22
66	Cooling water to stripper overhead condensers	20,445.0	Note 22
67	Cooling water from stripper overhead condensers	20,445.0	Note 22
68	Cooling water to CO_2 compressor intercoolers	5,162.0	Note 22
69	Cooling water from CO_2 compressor intercoolers	5,162.0	Note 22
70	Cooling water to CO_2 product cooler	1,519.0	Note 22
71	Cooling water from CO_2 product cooler	1,519.0	Note 22
72	Cooling water (hot) return to cooling tower	52,728.0	Note 22
73	DELETED	0	
74	DELETED	0	
75	Demineralized/Distillate water to PCC Plant	307.0	Note 22
76	BFW (condensate pump discharge) to carbon capture plant	141.0	Note 22
77	BFW to LP steam attemperator	104.0	Note 22
78	BFW to compressor steam geneators/Flash Feed Heaters	37.0	Note 22
79	BFW from compressor steam generators/flash feed heater to CCPP BFP	37.0	Note 22
80	Flow to Steam Attemperator	815.0	Note 22
81	Flow from Steam attemperator to Stripper Reboiler	919.0	Note 22
82	From Stripper Reboiler to CCPP	919.0	Note 22
83	MP condensate return from Amine Reclaimer to CCPP	0.0	Note 22, 24
84	Total Condensate return to CCPP	956.0	Note 22
85	Cooling water to miscellaneous users	2,511.0	Note 22
86	Cooling water from miscellaneous user	2,511.0	Note 22

Notes:

1 Water flow rates are based on the specified process conditions for the plant configuration shown on Sheet 1 and are shown in gpm unless otherwise specified. These cases may or may not represent the appropriate design flow for a particular flow stream. Therefore, it is not appropriate to reference this
2 Design based on Panda Power Project Heat Flow Diagrams, US1096-XG05-H-4081-01, Issued March 16, 2012, Rev.
3 Normally no flow.
4 Raw water clarifier blowdown is 2% of the raw water clarifier influent flow.
5 Gravity filter backwash is 2% of the gravity filter influent low.
6 Service water usage estimated at 30 gpm.
7 Cooling tower drift is 0.0005% of the circulating water flow.
8 Cooling tower cycles of concentration estimated to be 8.
9 Assumes regeneration of one condensate polisher per week.
10 Assumes operation of CT evaporative cooler at 2 cycles of concentration.
11 Sampling and miscellaneous losses are estimated at 0.5% of the steam turbine exhaust flow.
12 HRSG blowdown is estimated at 1% of the steam turbine exhaust flow.
13 The quench water temperature for the boiler blowdown tank is assumed to be 70°F, the blowdown tank effluent is 212°F
14 For the power plant, potable water usage (daily average) calculated based on 34 people @ 35 gpd/person and 8 people at 15 gpd. Increased additional 20% for PCC .
15 Flows referenced to this note are associated with batch processes and represent average flows. Instantaneous flows will be higher.
16 Brine concentrator distillate is 95.1% of the brine concentrator influent flow.
17 Demineralized water and service water are blended such that the makeup water to the evaporative coolers does not exceed the maximum allowable chlorides concentration. Average chlorides concentration in the demineralized water and service water streams are used.
18 Crystallizer continuous steam usage is 6500 lb/hr.
19 Deleted
20 No flow during normal operations. In case of a system upset, small purge on the order of 5-10 gpm for 5 minutes may be required
21 Assumed 75% recovery
22 For cooling water and steam/condensate streams between the power plant and Post Carbon Capture (PCC) plant, see PFD 26301-000-M5-WL-00001, PFD 2630-000-M5-SC-00001 and HMB 26301-000-M4CN-00001.
23 From Sherman PCC project HB dated 21 July 2020
24 If reclaimer is operated continuously, approximately 11 gpm will return to HRSG cycle.

BECHTEL	BECHTEL NATIONAL, INC.		
Feed Study for Carbon Capture Plant Retrofit			
Water Balance Diagram			
JOB NO. 26301	DWG. NO. 000-M5-YA-00002	REV. 001	Sheet: 3 of 3

Chapter 4: Process Equipment and Plant Layout

The focus of the PCC equipment selection and plant arrangement is on safety, followed by ease of operation and employing the most economical and cost-effective measures that successfully and effectively minimize piping quantities, use the most cost-effective materials, and integrate automation and controls requirements.

4.1 Equipment Selection

The PCC plant equipment and process have been selected to reduce the risk and magnitude of impact on the health and safety of workers and neighbors and the impact on the surrounding environment. Specific examples include the following:

- **Closed amine drain system.** All amine-containing streams are drained into a closed system to limit fugitive emissions and worker exposure.
- **Sound limits.** Generally, equipment is selected to produce a noise level not exceeding 85 dB at 1 meter. Blowers and compressors are located indoors to limit noise level at the site boundary.
- **Pump seals.** Pumps are specified to have high-integrity seals to reduce the risk of environmental releases.

4.2 Major Process Equipment

All major process equipment data sheets are attached in Appendix G, and a list of all mechanical equipment is attached in Appendix J.

4.2.1 Absorber Towers

Based on the best knowledge of fluid flow patterns, two cylindrical absorbers (T-101 and T-102) with 11.8 meters internal diameter and 44.3 meters straight section were selected to operate in parallel. The absorber towers are 304L stainless steel and the amine section of each tower is fitted with two beds of stainless steel structured packings, a 6 meter bed and a 9 meter bed, totaling 15 meters in height, to achieve the required efficiency and low-pressure drop across the vessel internals. The value of the cylindrical geometry was confirmed when the internal packing suppliers completed a computational fluid dynamics (CFD) model showing good flow distribution through the packing without any flow straighteners. Absorber towers have been sized to provide a residence time of 6 minutes for rich amine between LL and HH levels.

The water wash section at top of the column serves to reduce MEA content in the flue gas to less than 6 ppm. This section has one bed of 4-meter stainless-steel structured packing. Residence time for the wash water is 5 minutes. More details about the wash water section are provided in section 3.1.3.

Each absorber tower will have a 3-meter diameter, 12-meter tall stack on top with a continuous emissions monitoring system.

Because of their large size, the absorber segments will be shipped to the site in largest possible sizes for final assembly and testing in a fabrication yard at the site prior to their installation.

Key information about the absorbers is provided in Table 4-1 and absorber vessel is shown in Figure 4-1. Further details are provided in Data Sheets 26301-000-M5D-CN-00011 and 26301-000-M5D-CN-00012 (Appendix G).

Table 4-1

Absorbers (T-101 and T-102)

Internal Diameter (m)	11.8
Straight Section Length (m)	44.3
Packing Type	Structured SS 304L
Max Design Temperature (°C)	100
Max Design Pressure (bara)	1.1
Inlet Flue Gas Flow (kg/hr)	1,297,000
Outlet Flue Gas Flow (kg/hr)	1,237,000
Inlet Amine Flow (kg/hr)	1,390,000
Outlet Rich Amine Flow (kg/hr)	1,413,000
Bottoms Residence Time (minutes)	6

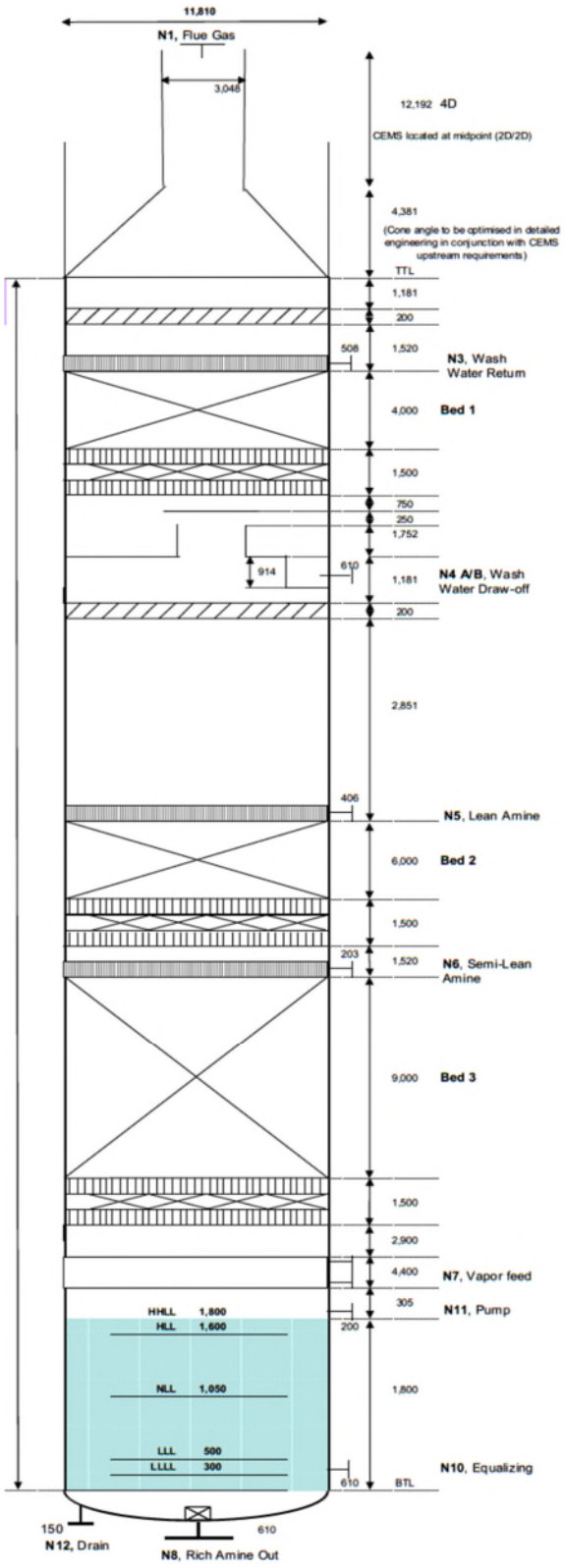

Figure 4-1

Absorber Vessel

4.2.2 Stripper Tower

The stripper vessel is 304L stainless steel with 6.7-meter internal diameter and a 43.6-meter straight section. The single stripper is fitted with structured stainless steel packing and has a 5-minute residence time for lean amine in the column bottom. The vessel is designed for a temperature of 160°C.

Similar to the absorbers, the stripper will be shipped to the site in the largest size possible and final assembly and testing performed at the site fabrication yard prior to its installation.

Key information about the stripper is provided in Table 4-2 and stripper vessel is shown in Figure 4-2. Further details are provided in Data Sheets 26301-000-M5D-CN-00051 and 26301-000-M5D-CN-00052 (Appendix G).

Table 4-2

Stripper (T-103)

Internal Diameter (m)	6.7
Straight Section Length (m)	43.6
Packing Type	Structured SS 304L
Max Design Temperature (°C)	160
Max Design Pressure (bara)	4.45
Inlet Rich Amine Flow (kg/hr)	1,131,000
Outlet CO_2 Vapor Flow (kg/hr)	213,000
Inlet Amine +Flash Gas (kg/hr)	567,000
Outlet Stripper Bottoms (kg/hr)	2,065,000
Bottoms Residence Time (minutes)	5

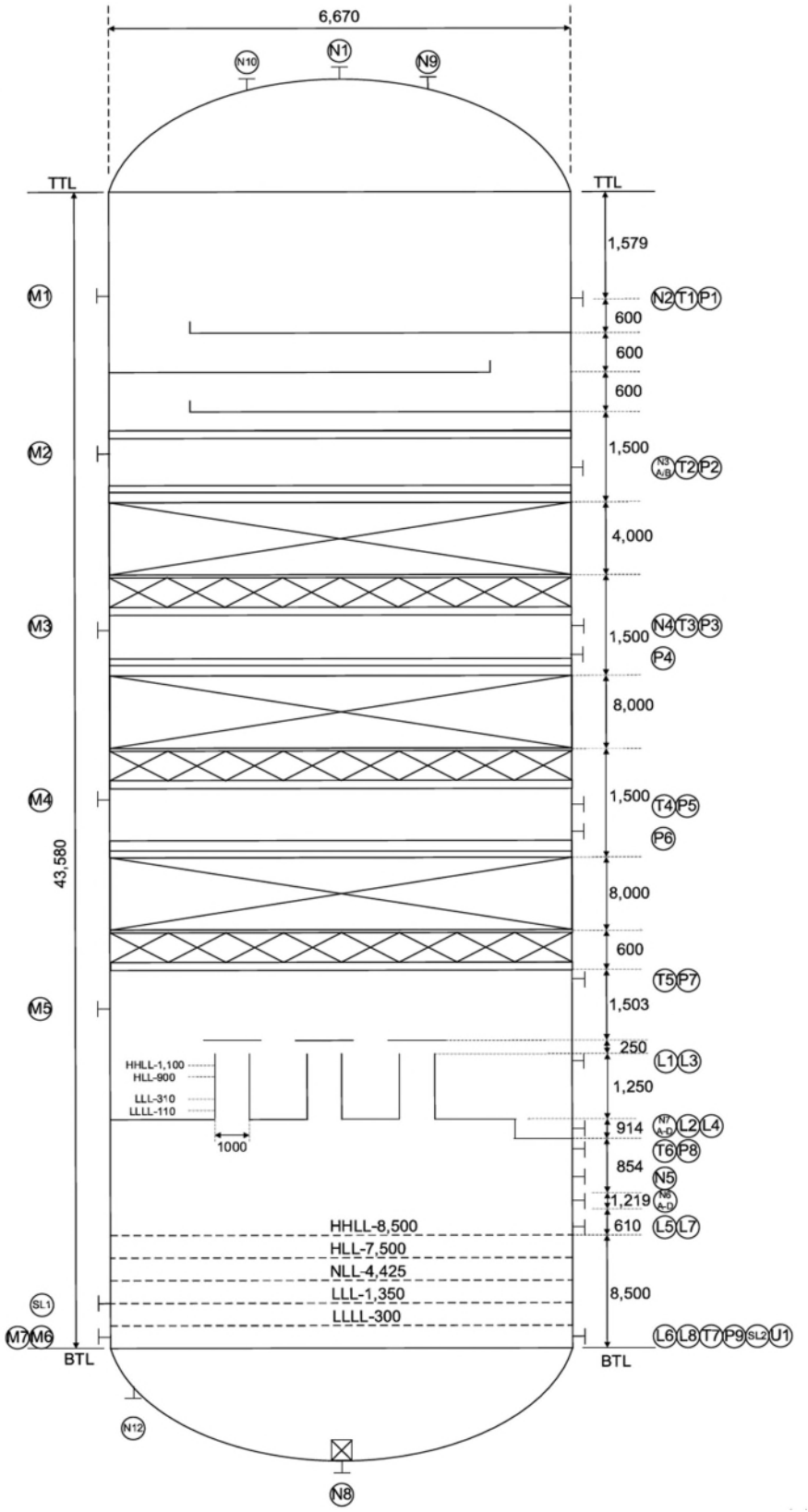

Figure 4-2

Stripper Vessel

4.2.3 Flue Gas Blowers

Two 50% horizontal centrifugal flue gas blowers (MA-101 and MA-102) were selected to draw flue gas through a duct from the Sherman power plant heat recovery steam generator (HRSG) stacks and discharge it to the absorbers. The blowers were sized for 0.128 bar differential pressure based on pressure drop information from the absorber suppliers. The flue gas flow to each blower is 1,292,000 kg/hr. Based on this high-pressure requirement, axial fans were not considered—but selection of the optimum fan may be revisited during the detail engineering phase, especially when a firm pressure drop in the absorbers is guaranteed by the packing suppliers. Axial fans are generally more economical but are noisier and require silencers.

The two flue gas blowers include a circulating lube oil system and vibration monitors.

Variable-frequency drives (VFDs) are provided on the blowers for smooth startup and stopping, lower starting current, and speed control at lower loads.

Major parameters for the flue gas blowers are provided in Table 4-3. Additional details on flue gas blowers can be found in Data Sheet 26301-000-M5D-BA-00011 in Appendix G.

Table 4-3

Flue Gas Blowers (MA-101 and MA-102)

Normal Flue Gas Inlet Temperature, °C	47.8
Inlet Pressure (bara)	0.97
Outlet Pressure (bara)	1.1
Design Flow Rate, Nm^3 /hr	1,131,847
Motor Size, HP	7500

4.2.4 Heat Exchange Equipment

The large mass flows associated with this CO_2 capture process require a significant amount of heat transfer at many points in the process. The process design philosophy maximizes heat recovery to limit the quantity of externally supplied heating energy or heat sink medium. To optimize the heat transfer and reduce the plot space required, plate-and-frame heat exchangers were selected for all the low-pressure (LP) services, including for the stripper reboiler. These exchangers can have much lower approach temperatures compared to other configurations; therefore, the amount of heat exchanged between streams and the plant's energy efficiency is increased.

For high-pressure services, the CO_2 product cooler (ME-118) is the only exception in which plate and welded plate-and-frame heat exchanger were used due to concerns over possible tube leakage if a shell-and-tube heat exchanger was selected. One major supplier has recommended a wet surface air cooler (WSAC) for this application, and this should be evaluated during the detail design.

Heat exchangers specifically using circulating water from the Sherman power plant use titanium plates because of chloride level in the cooling water. Heat exchangers that did not have contact with cooling water, such as lean amine/rich heat exchangers (ME108A-H) instead used 316L stainless steel for corrosion protection. Welded plate-and-frame heat exchangers were used in amine applications. For wash water coolers (ME101 and ME104) and stripper overhead condensers (ME111A-D), gasketed plate-and-frame heat exchangers were considered acceptable.

The steam generators and the interstage coolers in the CO_2 compression system are shell-and-tube heat exchangers. Because the duties in this area are relatively much smaller than those in the amine section, the effect on plot space is not pronounced.

The heat exchangers are listed in Table 4-4. The data sheets are provided in Appendix G.

Table 4-4

List of Heat Exchangers

HX Equipment No.	Description	HX Type	Data Sheet Doc. No.
ME-101/104	Wash Water Cooler (Abs. 1/Abs. 2)	Plate and Frame	26301-000-M5D-CN-00013
ME-102	Lean Amine Cooler	Plate and Frame	26301-000-M5D-CN-00032
ME-103	Semi-Lean/Rich Amine Heat Exchanger	Plate and Frame	26301-000-M5D-CN-00041
ME-107	Flash Feed Heat Exchanger	Plate and Frame	26301-000-M5D-CN-00042
ME-108	Lean/Rich Amine Heat Exchanger	Plate and Frame	26301-000-M5D-CN-00031
ME-109	Flash Feed Heater	Plate and Frame	26301-000-M5D-CN-00043
ME-110	Stripper Reboiler	Plate and Frame	26301-000-M5D-CN-00053
ME-111	Overhead Stripper Condenser	Plate and Frame	26301-000-M5D-CN-00055
ME-112	CO_2 Compressor First-Stage Steam Generator	Shell and Tube	-
ME-113	CO_2 Compressor First-Stage Intercooler	Shell and Tube	-
ME-114	CO_2 Compressor Second- Stage Steam Generator	Shell and Tube	-
ME-115	CO_2 Compressor Second- Stage Intercooler	Shell and Tube	-
ME-116	CO_2 Compressor Third- Stage Steam Generator	Shell and Tube	26301-000-M5D-QG-00023
ME-117	CO_2 Compressor Third-Stage Intercooler	Shell and Tube	26301-000-M5D-QG-00024
ME-118	CO_2 Product Cooler	Plate and Frame	26301-000-M5D-QG-00025

4.2.5 CO_2 Compressors

Compression of CO_2 to pipeline pressure can be achieved by using compressors only or by compressing CO_2 to the liquid/dense phase (Figure 4-3.) and pumping it to the required pressure. The configuration used in this study was three-stage in-line compressors followed by a pump; this was considered the lowest investment and operating cost option.

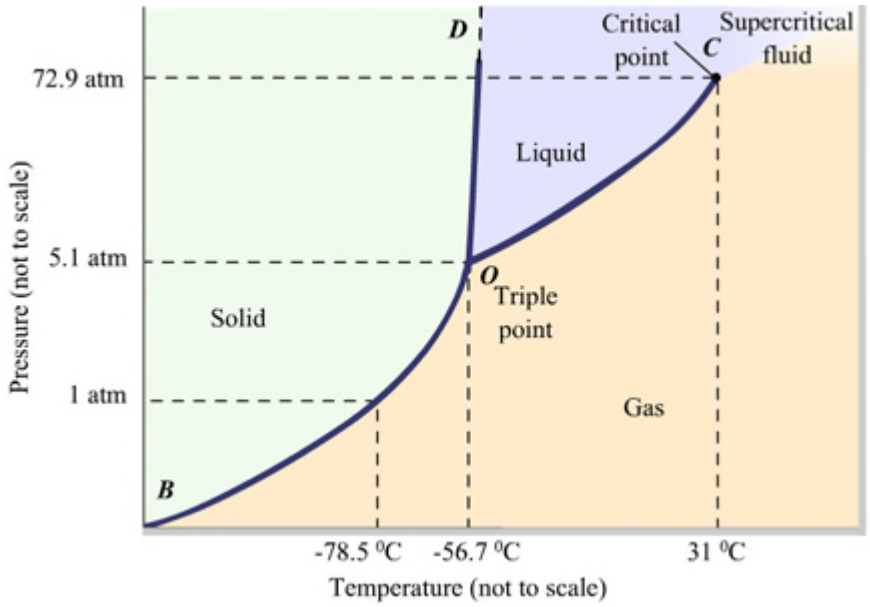

Figure 4-3

CO_2 Phase Diagram

Furthermore, there are two options for compressor type: several stages of in-line compressors or integrally geared compressors. The compressor type selected in this study was three-stage in-line compressor. Reliability is a major selection factor because no redundancy is included in the compression scheme.

During the detailed design phase, further investigation into integrally geared compressors is recommended.

CO_2 is compressed to 5 bara in the first-stage compressor and then cooled before entering the second-stage compressor. The CO_2 is compressed to 22 bara followed by cooling again before entering the third-stage compressor. In the third stage, the CO_2 is compressed to 83 bara and then cooled again. Cooling the gas between compression stages lowers the power consumption. The inter-stage cooling is achieved using three LP steam-generating heat exchangers and three water-cooled heat exchangers. The LP steam generated—which is a form of heat recovery—is used in the semi-lean stripping process.

The lubrication oil unit is mounted on a separate baseplate and provides lubrication oil to the motor, gearbox, and compressors. Compressors are provided with dry gas seal systems. Depending upon the supplier, the first-stage (LP) compressor may contain labyrinth-type gas seals and dry-type gas seals on the higher pressure stages. Compressors also include a vibration monitoring system and anti-surge control system.

The CO_2 gas compressor is driven by an induction motor coupled through a high-speed double helical gear with the combined LP/MP compressors (first and second stages) and the HP compressor (third stage). Compressor brake horsepower is approximately 13,300 kW. The motor is powered by a VFD that permits soft-start to avoid significant electrical power system inrush loading.

4.2.6 CO_2 Drying

The CO_2 gas stream leaving the stripper is saturated with water. The compression and cooling cycles of the first two stages of the compression system remove much of the water carried over from the stripper through knockout drums (MV-104/105). However, to meet the requirement of water content of less than 50 ppmw in the final CO_2 product going to the pipeline, the CO_2 stream must be dried using desiccant dryers. To meet this requirement, a CO_2 dryer package is located between the second and third compression stages. Some of the parameters of the CO_2 dryer package are listed in Table 4-5. Details are provided in the drying package data sheet, 26301-000-M5D-QG-00021 (Appendix G).

Table 4-5

CO_2 Drying Package (MS-104)

Supply Temperature (°C)	39
Supply Pressure (bar)	21
Inlet CO_2 Flow (kg/hr)	129,000
Water Content in Dry Gas (ppmw)	< 50
Target Purge Rate	2%

The CO_2 dryer package consists of two identical absorber vessels complete with valving, instrumentation, and other associated equipment. The two vessels are operated in parallel—one in regeneration mode and one in operation. Incoming CO_2 gas flows through one of the vessels and is dried by the desiccant. A portion of the dried gas is heated by an electric heater and is used to regenerate the second vessel. The flows are automatically switched after the first vessel is saturated and the regeneration in the second vessel is complete. The duration of the drying and regeneration cycles may vary based on the supplier but is approximately 24 hours. The regeneration method is extremely efficient because the dryer vessel is not depressurized and virtually no CO_2 is vented or recycled.

The desiccant drying process selected precludes the need to store and handle any liquids for drying.

4.2.7 CO_2 Send-Out Pumps

Two 100% CO_2 send-out centrifugal pumps (MP-108A/B) are provided to discharge the dense phase CO_2 from the CO_2 surge drum (MV-106) to the pipeline at 151 bara. The pumps are axially split, multi-stage, with a double-suction, first-stage impeller and are driven by a 3000 HP motor.

4.2.8 Reclaimer

The Sherman reclaimer is a two-stage, dual-pressure, continuous reclaimer design. Each of the two flash stages is equipped with a flash drum, a recirculation pump, and a steam heat exchanger. The recirculation pump is sized to produce 3 wt% vaporization during operation, which ensures good distribution of vapor and liquid in the shell-and-tube flash heat exchanger. A forced circulation heat exchanger was specified to reduce tube fouling and to simplify exchanger tube cleaning compared to kettle-type reclaimers used in lower temperature reclaiming operations.

The reclaimer equipment will be provided by the supplier as a complete package including a chemical skid to feed 50 wt% caustic to the reclaimer to stoichiometrically neutralize both organic and inorganic heat stable salts (HSSs). The rigorous, high level of reclaiming is expected to address the issues usually addressed with additive usage (if employed) such as foaming, although this should be tested to confirm reclaimer performance. The vessels and piping in contact with solvent are made of stainless steel.

The reclaimer feed rate is set to treat the entire Sherman solvent inventory (estimated at 1235 m^3, 36 wt% MEA) within four weeks' calendar time, assuming continuous operation six days per week (24 days of operation plus 4 days' standby per 28-day cycle). Reclaimer standby time allows for changeout of residue truck or trailer and for maintenance, inspection, and cleanup of the reclaimer equipment.

4.3 Carbon Capture Plant Layout

4.3.1 Health and Safety Considerations

The equipment has been laid out using industry best practices to ensure that incompatible pieces of equipment and processes are kept a sufficient distance apart as well as safe access to and egress from the operating areas.

For piping, safety measures are planned and incorporated with regard to head clearances, walkways, clear safety escape routes, pull spaces, and machinery maintenance areas.

The plant layout was reviewed regularly for hazard identification (HAZID) and hazard and operability (HAZOP) purposes to ensure that the layout was compatible with health, safety, and environment (HSE) requirements.

4.3.2 Arrangement

The PCC plant arrangement is shown on Plot plan 26301-000-P1-0010-00002 and on Layout/General Arrangement Drawings 26301-000-P1-0010-00001, 26301-000-P1-0310-00001, 26301-000-P1-0310-00002, and 26301-000-P1-0310-00003. These drawings are included at the end of this chapter and in Appendix E. Piping arrangement and elevations of the PCC plant are shown in "P4" drawings in Appendix E.

The PCC plant is located adjacent to the natural gas–combined cycle (NGCC) Sherman Power Plant in Grayson County, Texas, which is owned and operated by Panda Power. See Figure 4-4 for PCC location and in Appendix E. The PCC plant is within a fixed area of 70 m x 210 m that includes two flue gas blowers, two absorber columns, one stripper column, a CO_2 compressor building, an electrical building, a tanks/unloading area, and a control/administration/storage/laboratory building. Routing of the ducting from the NGCC HRSG stacks was a key factor in determining the location and arrangement of the absorbers. The two 11.8 m diameter absorber columns are set to accommodate the incoming 6.2 m square flue gas duct in an equal distribution through the two flue gas blowers. The associated equipment, pumps, exchangers, and so on are strategically located to accommodate the shortest possible pipe runs and symmetrical configuration for the process design. See Figure 4-5 for Power Plant layout and plot plan 26301-000-P1-0010-0002 at the end of this chapter, showing both facilities.

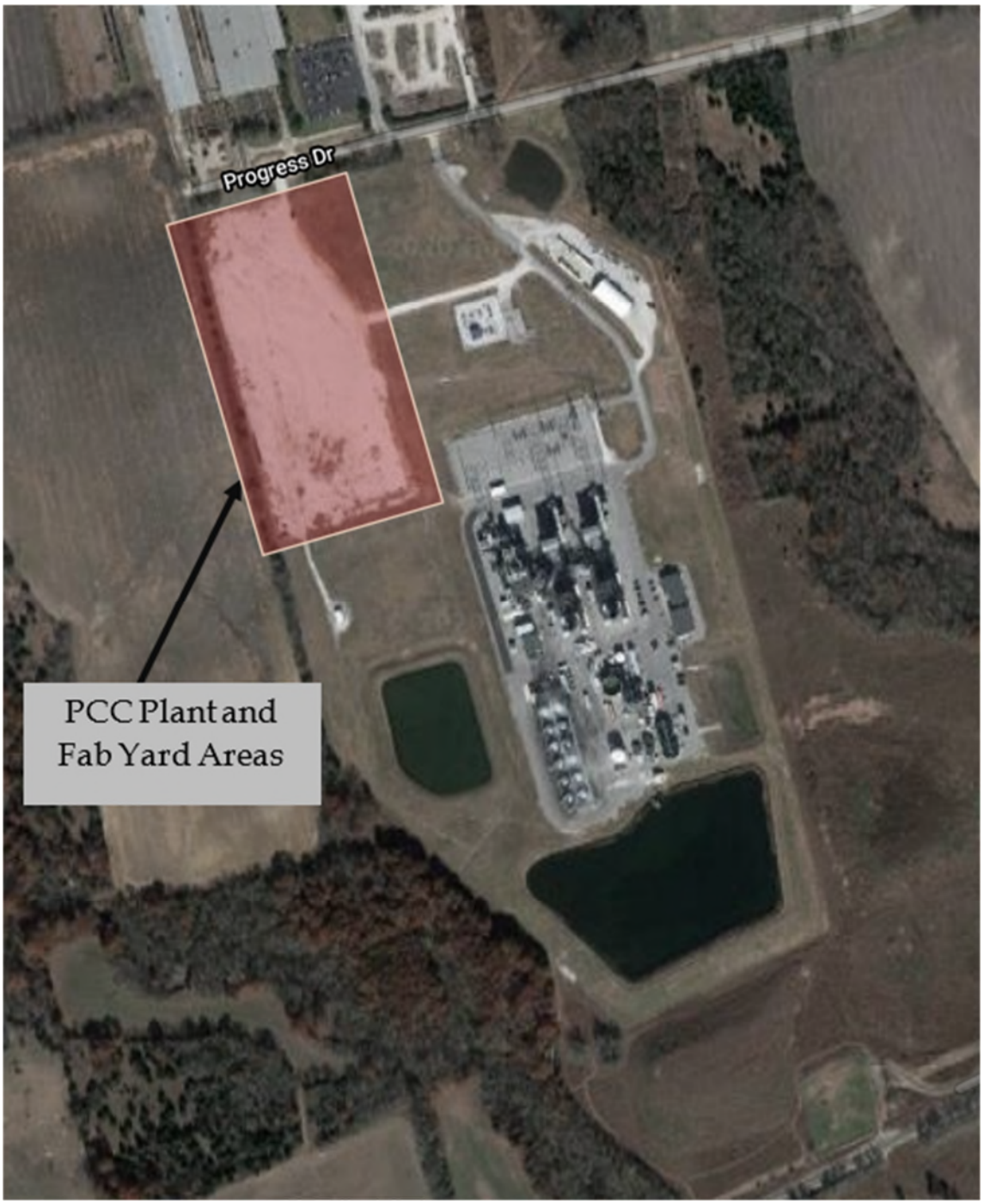

Figure 4-4

PCC Plant and Fab Yard Areas and Proximity to NGCC Power Plant

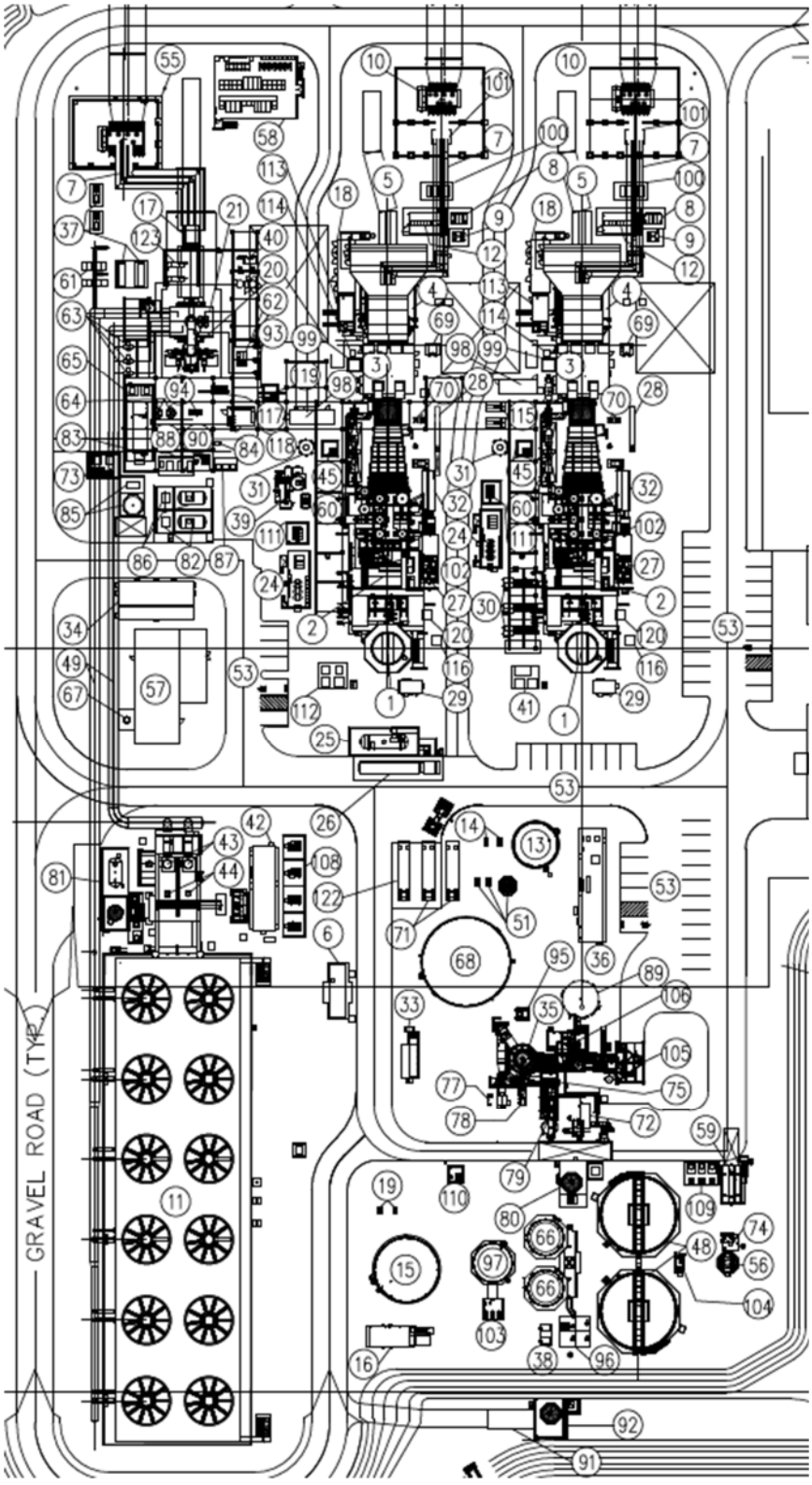

Legend*:

1	Stack
2	Heat Recovery Steam Generator (HRSG)
3	Combustion Turbine
20	Steam Turbine
21	Condenser
39	Auxiliary Boiler
49	Circulating Water Pipes
57	Control Room
*For complete legend, see Plot Plan 26301-000-P1-0010-0002 at the end of the chapter.	

Figure 4-5

Sherman NGCC Power Plant Layout

To control the average circuit and umbilical lengths, the electrical building and the continuous emissions monitoring system (CEMS) building have been located to be central to the process.

The tank unloading area is located to accommodate a road design that allows trucks to enter and exit the facility with minimal travel around the power plant process area. The control/administration building and parking are set to the far north of the site because the building acts as a safety bunker, placing it nearest the safety egress point. The plant loop road provides access to all sides of the process area. The pipe racks are designed to make available an additional access through the center of the site by permitting access under the center east-west pipe rack.

In addition to the PCC plant fixed area (see Figure 4-7 for PCC layout), a 152 m x 152 m fabrication yard is provided north of the PCC plant, which will be required for fabrication and assembly of large vessels (absorbers and stripper) and flue gas ductwork during construction.

4.3.3 Piping

The piping is routed with particular attention to achieving the shortest route. Certain process parameters have been incorporated with regard to equipment and piping symmetry. Special attention has been given to pipe supports and hangers. The piping sizes and wall thicknesses are based on the system design pressures and temperatures. The piping sizes and pipe class designations for each system are shown on their respective P&IDs (Appendix A). The piping material, size, and schedule information for each system are provided in Pipe Class Selection, document no. 26301-000-3DS-P72G-00001 (See Appendix F).

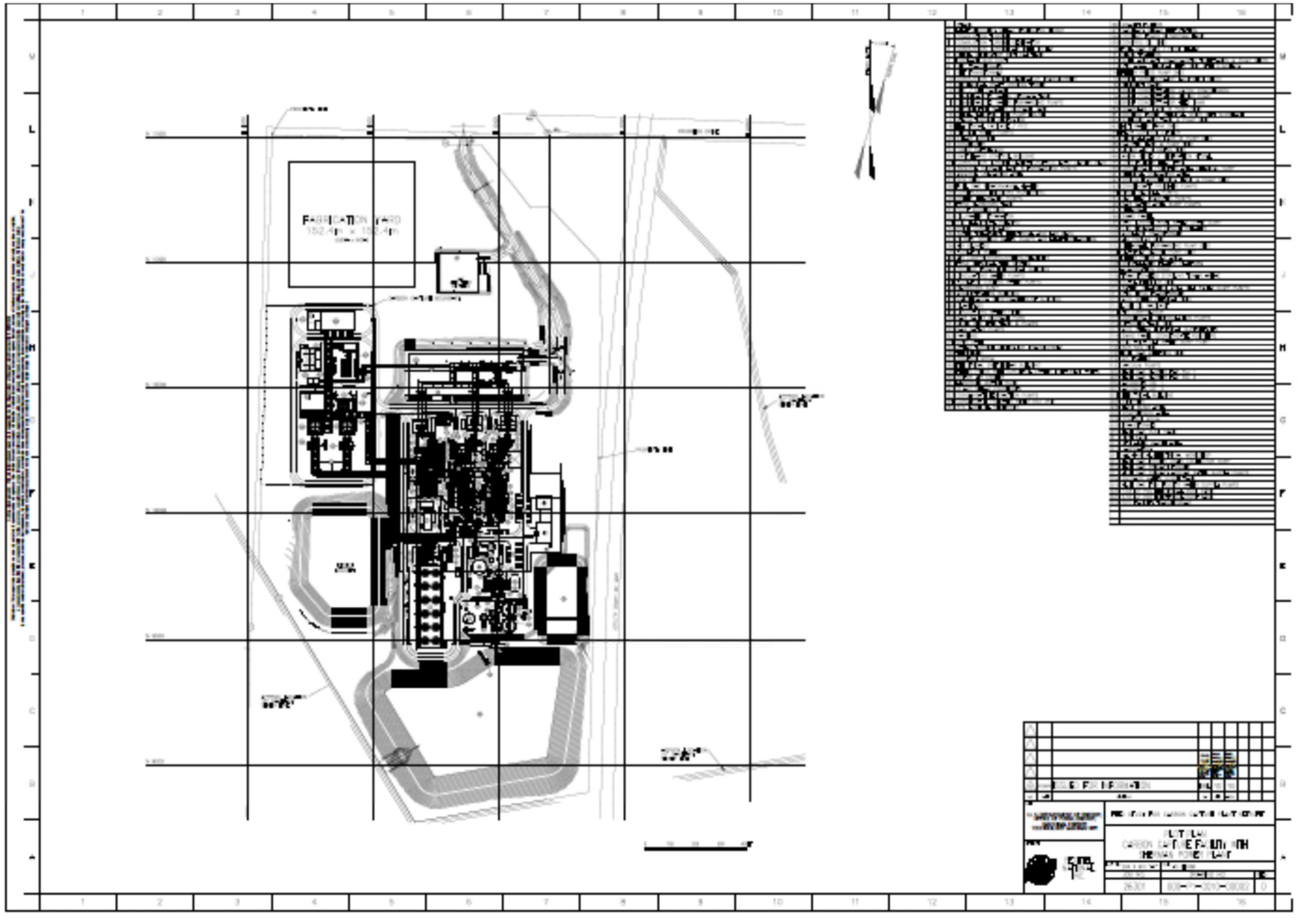

Plot Plan 26301-000-P1-0010-00002

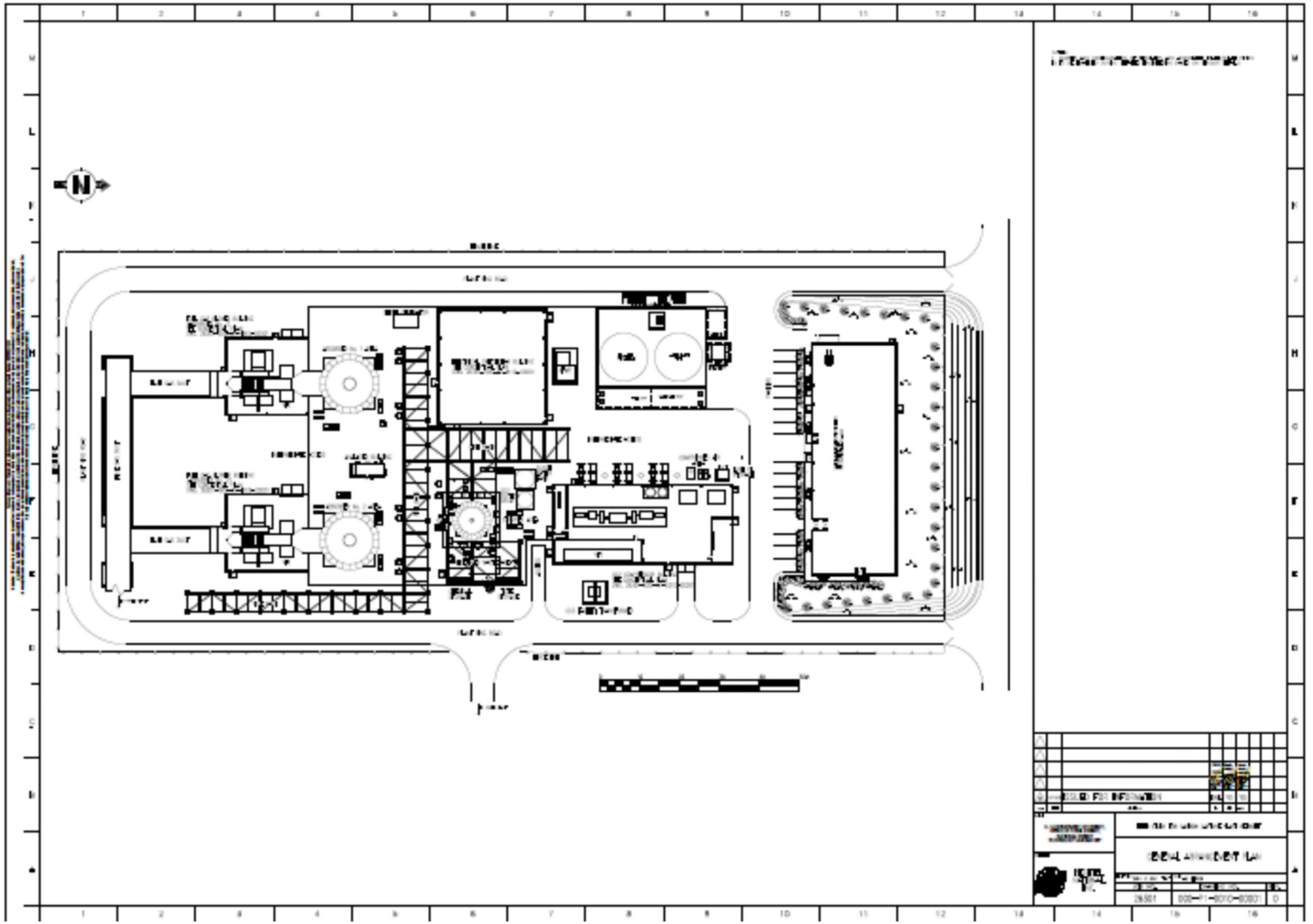

Layout/General Arrangement 26301-000-P1-0010-00001

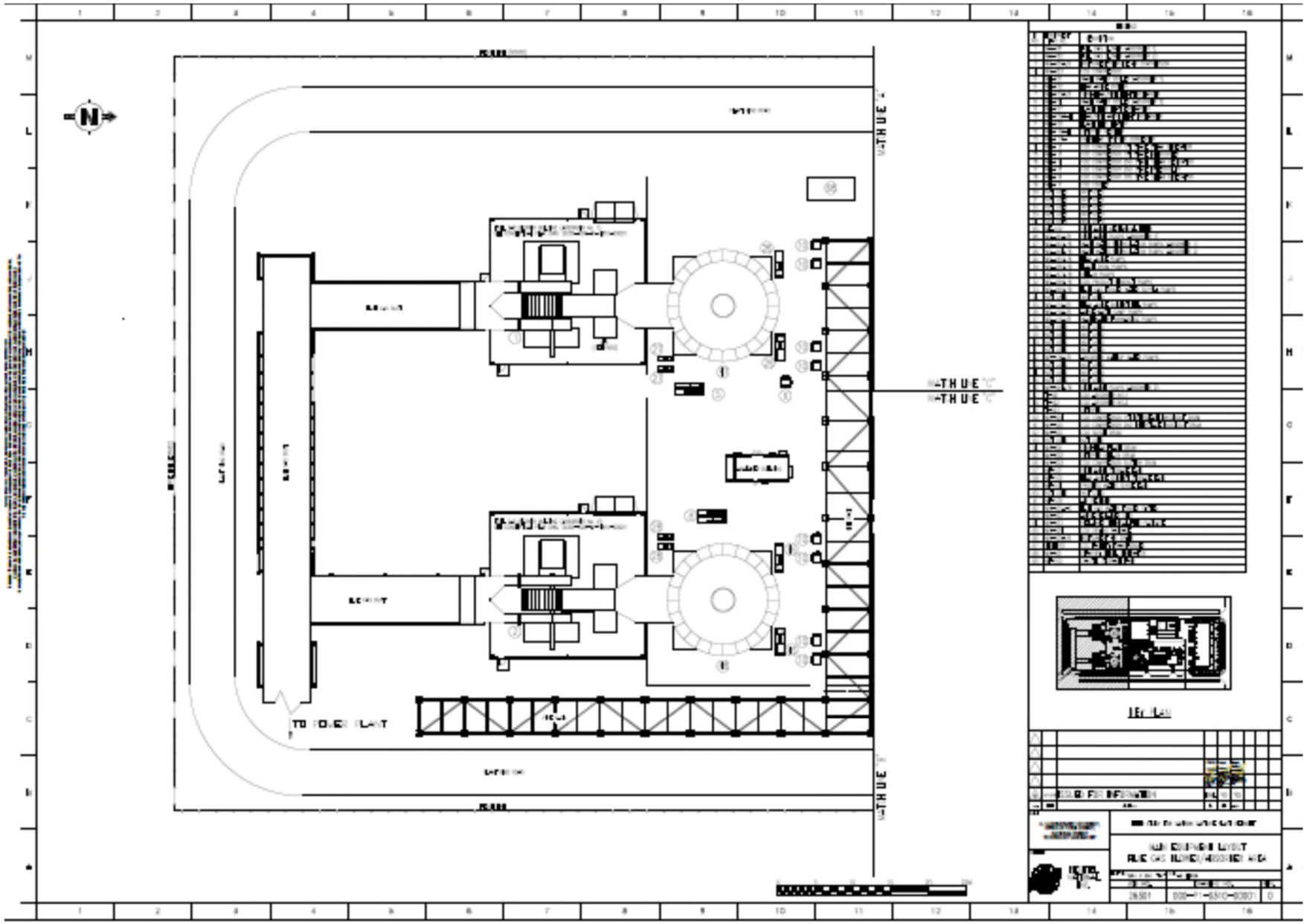

Layout/General Arrangement Drawing 26301-000-P1-0310-00001

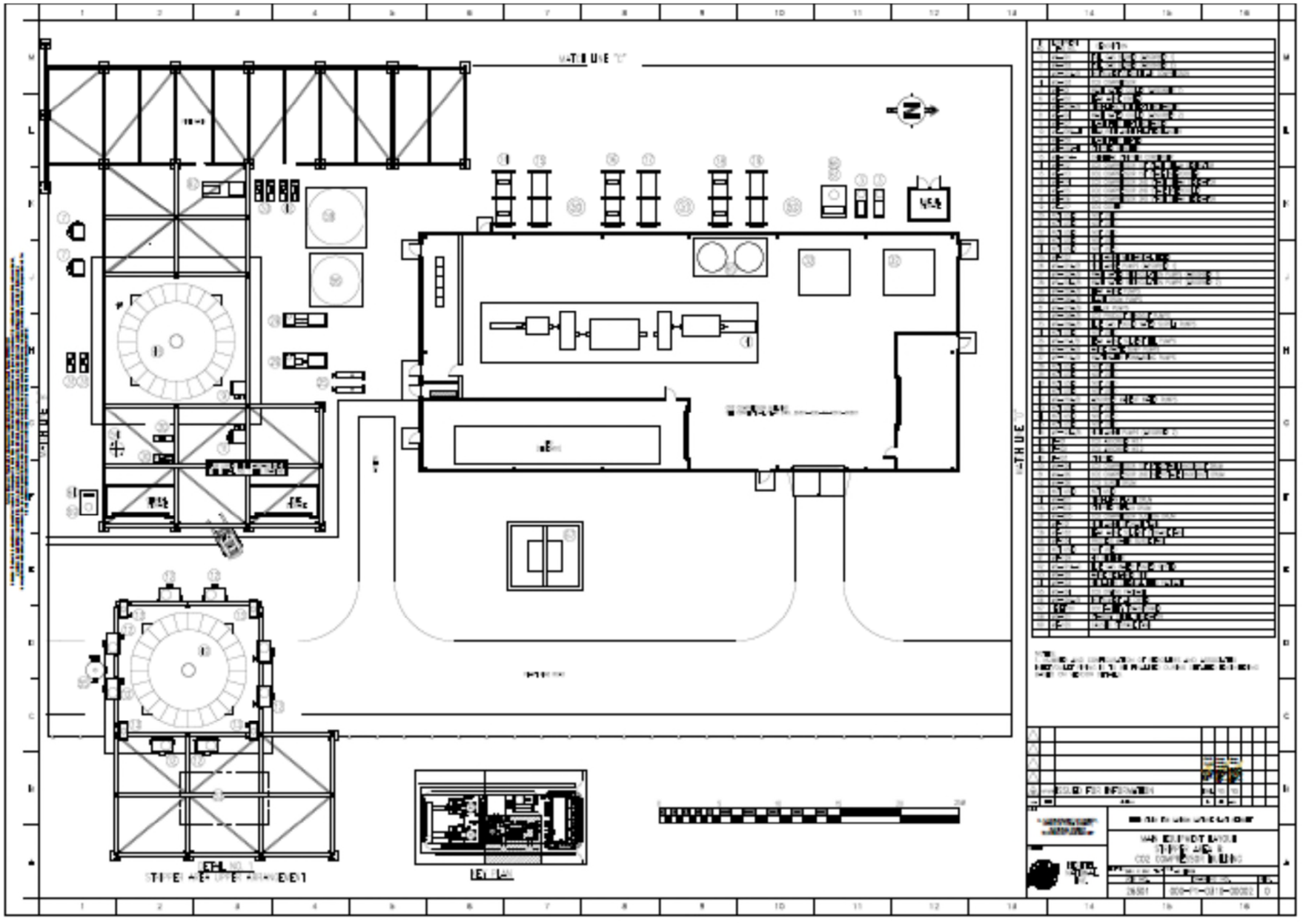

Layout/General Arrangement Drawing 26301-000-P1-0310-00002

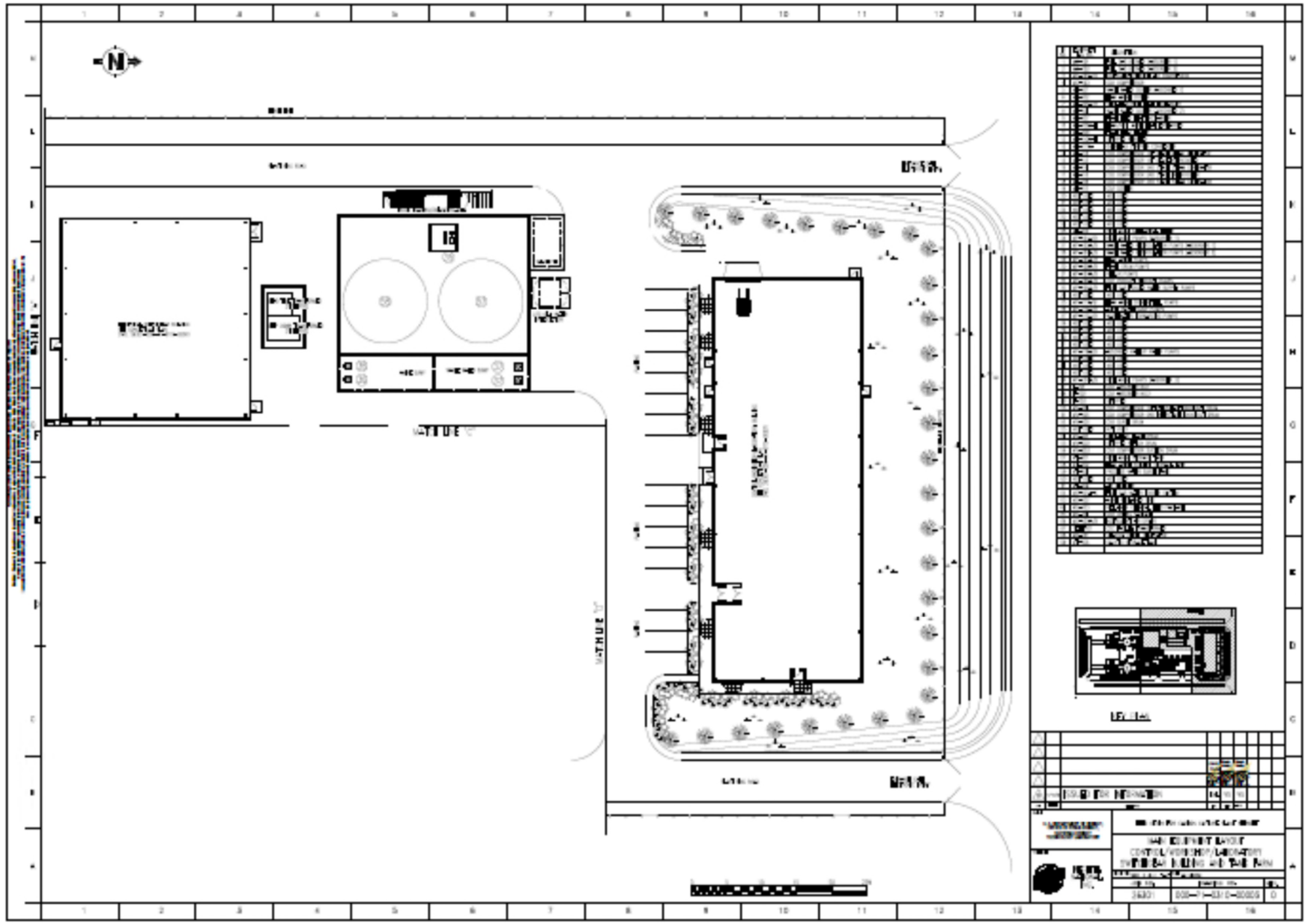

Layout/General Arrangement Drawing 26301-000-P1-0310-00003

Chapter 5: Mechanical Utility Systems

5.1 Utilities Consumptions

The mechanical utilities for the Sherman post-combustion carbon-capture and compression (PCC) plant are as follows:

- Steam (low pressure [LP] and medium pressure [MP])
- Condensate
- Cooling water
- Potable water
- Fire protection water
- Compressed air
- Inert gases (nitrogen)

The requirements for these utilities are summarized in Table 5-1, and a complete utility consumption list is shown in Appendix I. The estimated demands are based on using 35% monoethanolamine (MEA) solvent, the heat and mass balances in Document 26301-000-M4-CN-00001 (in Chapter 3), and other design factors. These utilities support the plant's main amine process for capturing CO_2.

Table 5-1

Utility Requirements

Commodity	Demand	Units	Comments
LP Steam	184.6	tonnes/hr	See Section 5.2
MP Steam	3.0	tonnes/hr	See Section 5.2 during reclaimer operation
Steam Condensate	217.1	tonnes/hr	See Section 5.2, returned to NGCC
Boiler Feedwater	32.0	tonnes/hr	See Section 5.3, returned to NGCC
Cooling Water	12,012	m^3/hr	See Section **Error! Reference source not found.**
Potable Water	26	m^3/hr	See Section **Error! Reference source not found.**, Intermittent
Compressed Air			See Section 5.7
Instrument Air	185	Nm^3/hr	Continuous (400 Nm^3/hr intermittent)
Plant Air	85	Nm^3/hr	Intermittent (maintenance tools)
Nitrogen Gas	85	Nm^3/hr	See Section **Error! Reference source not found.**5.8, Intermittent
Firewater	340	m^3/hr	See Section 5.6, Intermittent
Softened Water/Distillate from ZLD	69.7	m^3/hr	See Section **Error! Reference source not found.**

5.2 Steam and Condensate

LP steam. Rich amine is heated in the stripper to allow release of CO_2 from it. This thermal energy comes from the reboiler (ME-110A-H), which receives LP steam from the NGCC plant. A total of 208,100 kg/hr saturated steam at 3.13 bara is required by the reboiler (see Stream 525 in HMB 26301-000-M4-CN-00001 in Chapter 3).

The two suitable locations for LP steam extraction are the cold reheat line and IP to LP turbine crossover piping. Pressure/temperature conditions at these locations for the guaranteed heat balance cases (95°F ambient, 43% relative humidity, evaporative cooler = ON) are as follows:

	w/o duct firing	with duct firing
Cold reheat pressure, bara (psia)	26.53 (384.8)	38.98 (565.4)
Cold reheat temperature, °C (°F)	346.7 (656)	353.3 (668)
Crossover pressure, bara (psia)	3.90 (56.62)	5.41 (78.45)
Crossover temperature, °C (°F)	291.2 (556.1)	290.7 (555.3)

Cold reheat has considerably higher pressure, and adequate pressure steam can be provided at the reboiler even when the gas turbines are operating at low loads. However, this option has the following disadvantages:

- Higher power plant output loss compared to extraction from the crossover piping.
- Steam flow to the heat recovery steam generator (HRSG) reheater will decrease, and the HRSG supplier will have to evaluate its impact.
- Tie-in at the cold reheat line is more difficult.

For these reasons, and after discussion with Siemens—the power island supplier for Sherman—this cold reheat option was discarded in favor of LP steam extraction from the crossover piping shown in Figure 5-1 (an alternative view is shown in Figure 5-2). A new crossover piping will be required with LP steam extraction near the IP turbine exhaust and a backpressure valve to maintain pressure at the LP extraction point as shown in the sketch (Figure 5-3). Siemens has confirmed that the pressure at IP exhaust can be increased by 5–10 psi to ensure that there is sufficient pressure at the extraction point for PCC when the two gas turbines are operating at 60% load or when only one gas turbine is operating at full load without duct firing. It was also confirmed that the minimum flow requirement to the LP turbine can still be met despite this extraction. Siemens has indicated that there is no concern as long as steam going to the LP turbine is >20% of the design flow. The maximum steam flow going to the LP turbine is 1,855,551 lbs/hr, and 20% of that flow is 371,110 lbs/hr. Actual flows to the LP turbine during PCC operation are much higher so there is no concern in meeting Siemens requirements.

The 36 in. pipe LP steam piping from the interface point to PCC will be routed on a pipe rack. A desuperheating station in the piping will reduce the LP steam temperature to approximately 135°C for use in the reboiler using 23.5 tonnes/hr of boiler feedwater into 184.6 tonnes/hr superheated LP steam (see PFD 26301-000-M5-SC-00001 in Chapter 3).

The reboiler consists of eight 12.5% heat exchangers, and steam flow control valves are provided on the inlet piping to each heat exchanger. Steam line drains are provided throughout the system as required and routed to the LP condensate header (see P&IDs 26301-000-M6-AB-00002 and 26301-000-M6-SC-00001 in Appendix A).

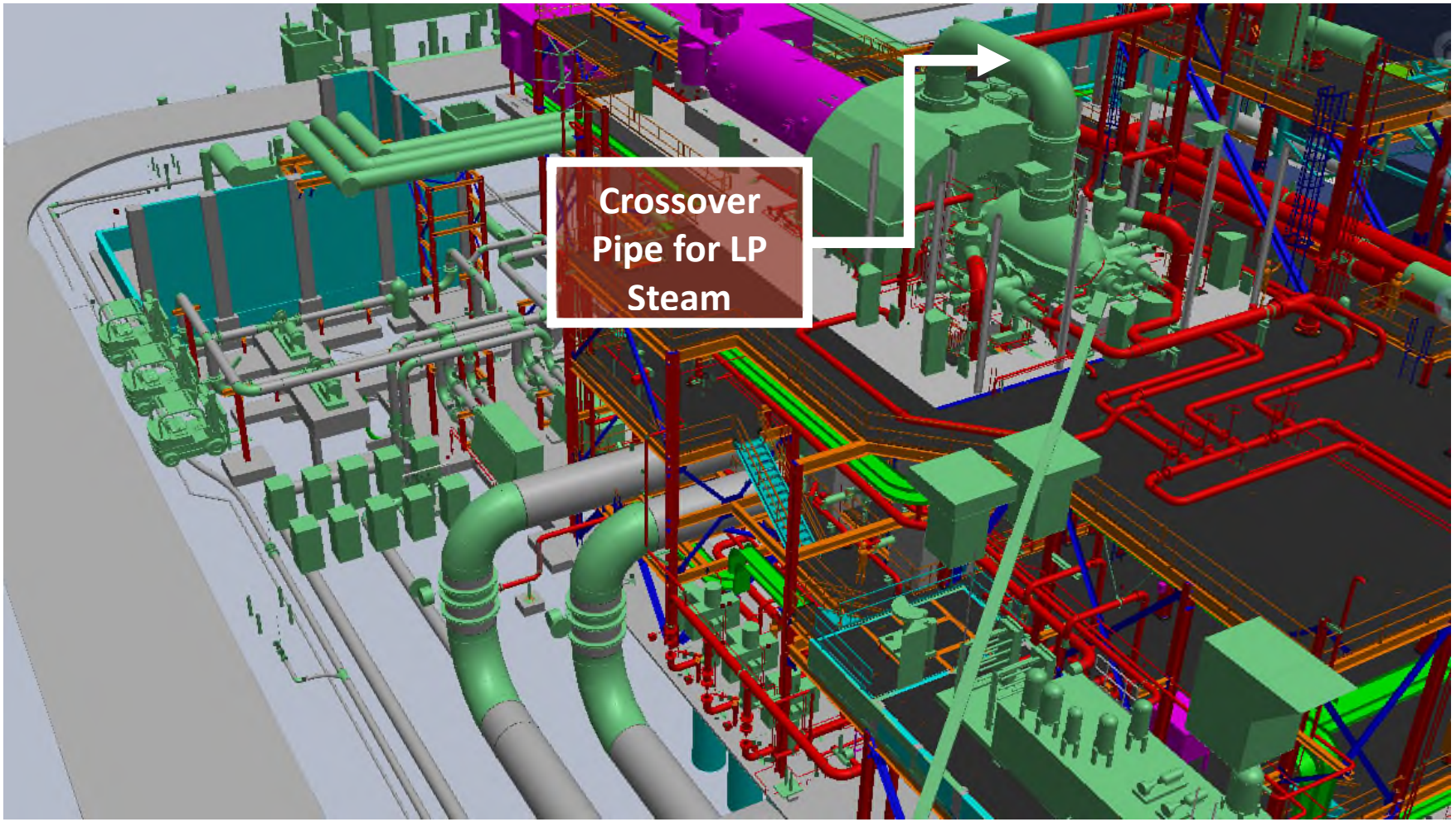

Figure 5-1

Existing Crossover Pipe for LP Steam Extraction

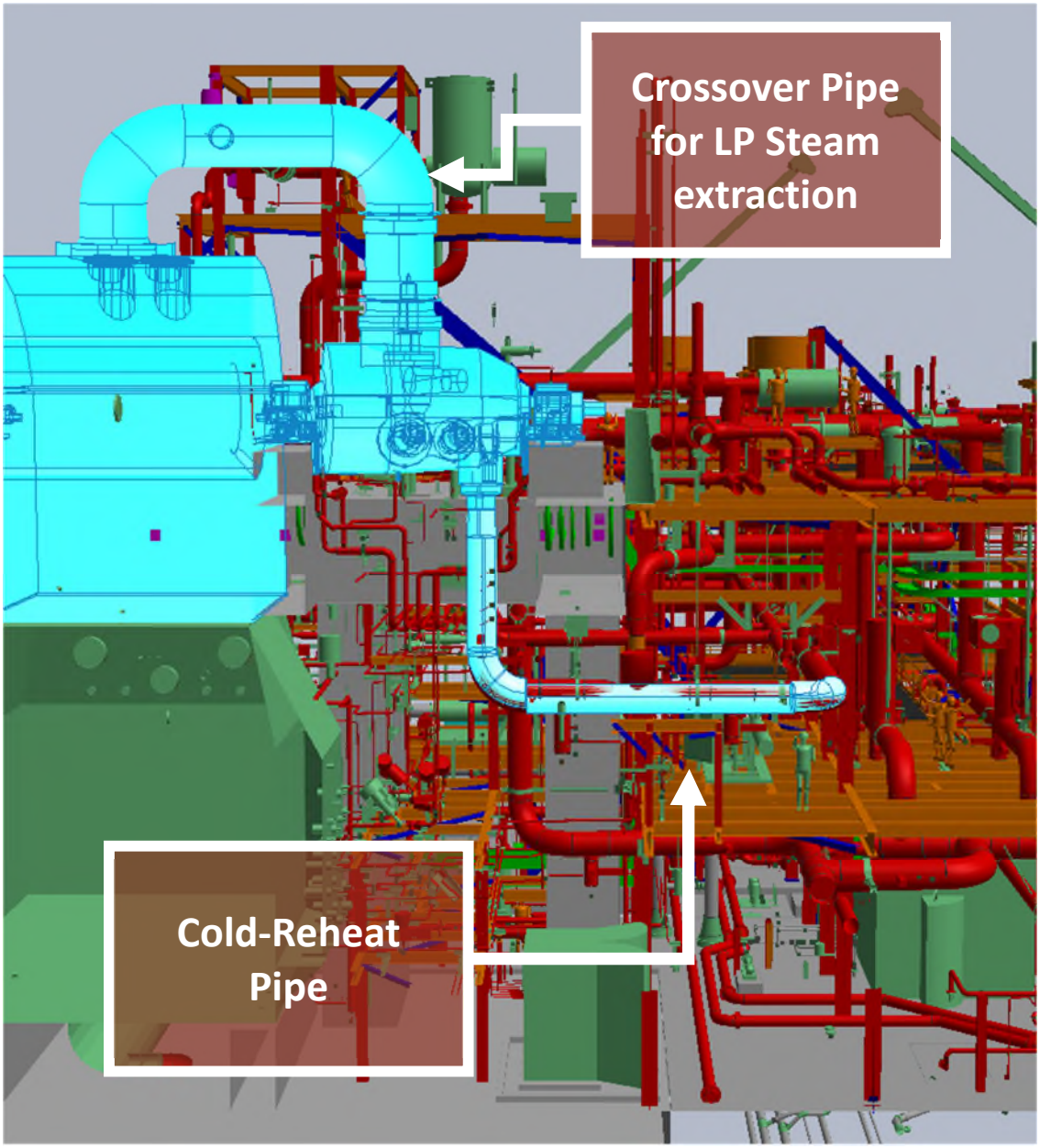

Figure 5-2

Existing Crossover Pipe for LP Steam Extraction: Alternative View

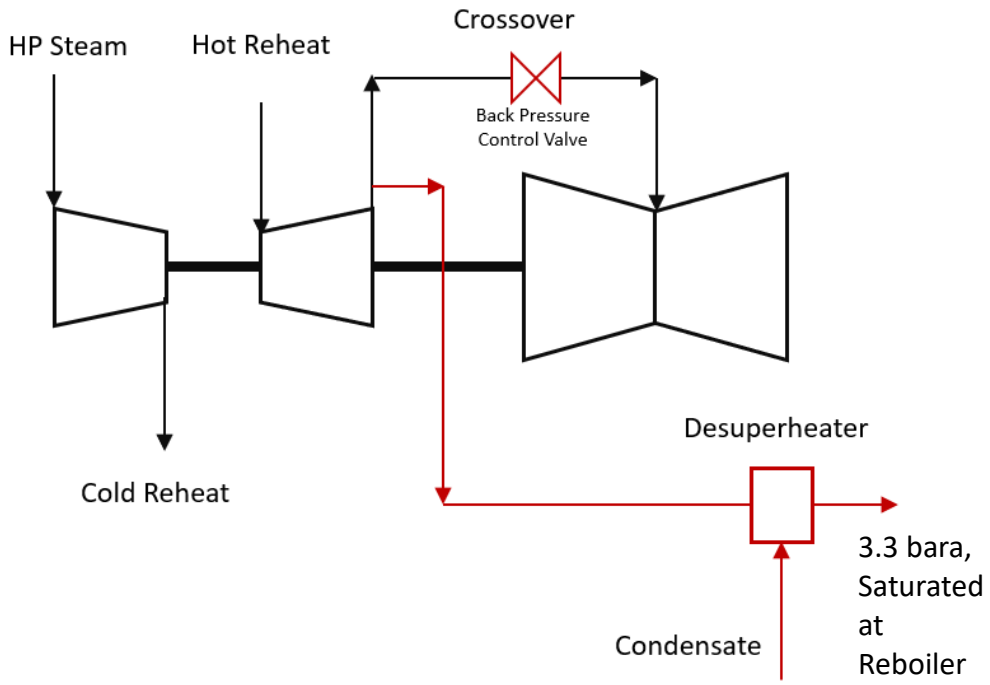

Figure 5-3

Sketch showing LP Extraction and Backpressure Valve

MP steam. The amine reclamation system requires thermal energy for release of chemically bound amine from the heat stable salts (HSS). This thermal energy is provided by the auxiliary boiler at natural-gas combined-cycle (NGCC) plant via a 4 in. line that ties to the 6 in. auxiliary boiler supply header. The supply line to PCC reclaimer is routed on the pipe rack.

The PCC plant amine reclamation is a nearly continuous process (six days per week) and the reclaimer (MS-102) requires ~3 tonnes/hr saturated steam at 7 bara at approximately 165°C. The steam conditions at the auxiliary boiler supply header interface point are approximately 10.5 bara, saturated, and the auxiliary boiler has sufficient capacity to provide the required quantity. To meet the supply conditions at the reclaimer, a steam flow control valve and desuperheating station are provided on the inlet piping to the reclaimer.

Steam line drains are provided throughout the system as required and routed to the LP condensate collection system. In addition, a manual globe valve is provided in the high-pressure (HP) steam line near the reclaimer to facilitate cleaning or aid in reclaimer waste removal.

LP condensate. The condensate system is shown in P&ID 26301-000-M6-SC-00001 in Appendix A.

LP steam condensate is produced in the stripper reboiler ME-110 A-H and MP condensate is produced in amine reclaimer MS-102 when the amine reclamation process is ongoing. In addition, LP condensate is produced in the flash feed heater (ME-109) from the steam it receives from compressor interstage steam generators. All three streams are combined and transferred to the condensate collection system.

In addition, small quantities (about 100 kg/hr) of blowdown from the CO_2 compressor first-, second-, and third-stage Steam Generators ME-112, ME-114, and ME-116 are also routed to the condensate collection system. The condensate is then reurned to the NGCC condenser. The minimum LP condensate conditions at the PCC boundary limit are 0.5 barg at 134.7°C.

An online sampling system monitors the conductivity of the condensate returning to NGCC condenser. In case of high conductivity, the PCC plant is shut down and condensate drained instead of returning it to NGCC. High

conductivity is alarmed in the distributed control system (DCS).

The condensate system is shown in P&IDs 26301-000-M6-AB-00002 and 26301-000-M6-SC-00001 in Appendix A.

5.3 Boiler Feedwater

Boiler feedwater (BFW) is supplied from the NGCC condensate pump to the PCC plant as shown in P&ID 26301-000-M6-SC-00001 in Appendix A.

This water is fed to CO_2 compressor first-, second-, and third-stage steam generators ME-112, ME-114, and ME-116 and used as spray water in the reboiler LP steam desuperheater and reclaimer MP steam desuperheater, if needed. A total of ~32 tonnes of water is needed, with approximately 23.5 tonnes/hr for LP steam desuperheating and 8.5 tonnes/hr for compressor steam generators. The steam generated in compressor steam generators is used in the flash feed heater. All the boiler feedwater is returned to NGCC via the condensate return line as explained in Section 5.2.

5.4 Cooling Water

Cooling water is required as the cooling medium for all of the heat exchangers in the PCC plant. This cooling water is provided from the existing NGCC plant cooling tower. No new cooling tower capacity is anticipated when adding the PCC. The cooling tower is adequate for the heat load from the PCC plant because part of the LP steam is diverted to the reboiler during PCC operation, reducing the load on the condenser.

The cooling water system design is based on a water supply and return temperatures of 28.6°C and 39.4°C, respectively.

The cooling water is supplied to the following users:

- Wash Water Coolers ME-101 and ME-104
- Lean Amine Cooler ME-102
- Overhead Stripper Condenser ME-111
- CO_2 Compressor First- and Second-Stage Intercoolers ME-113 and ME-115
- CO_2 Cooler ME-117
- CO_2 Product Cooler ME-118
- Rotating equipment and other minor users (assumed additional 5%)

Further discussions with cooling tower supplier and Panda Power are recommended to determine the most cost-effective way to supply cooling water to PCC with minimal risk to NGCC operation. This will be done during the pilot plant phase; modification to the cooling tower forebay with separate cooling water pumps, replacement of existing auxiliary cooling water pumps, and modifications to the circulating water line will be reviewed. This FEED study already incorporates adequate capital cost margin for this modification.

5.5 Potable Water

The potable water system is shown in P&ID 26301-000-M6-PW-00001 in Appendix A.

Potable water is supplied to PCC from a potable water underground header in the NGCC plant. It is in accordance with potable water standards and will meet the 5.0 barg pressure requirement at the NGCC and PCC boundary limit (B/L). Potable water is used for sanitary needs, emergency safety showers (ESSs), and at all utility stations. It is not used for any process needs. A hose connection for potable water is provided at each of the seven utility stations. Temperature-controlled ESSs are located in the following areas:

- Amine storage tank area
- CO_2 compressor area
- Absorber 1 area
- Absorber 2 area
- Stripper area
- Reboiler/reclaimer area
- Electrical building area

Heated emergency eyewash stations (EWSs) are supplied by bottled water. They are located adjacent to each ESS and in the analyzer building area. Total potable water demand is based on the simultaneous use of all sanitary water users and assuming two ESSs operating simultaneously.

5.6 Fire Protection Systems

The fire water system is shown in P&ID 26301-000-M6-PF-00001 in Appendix A.

The PCC plant is provided with an 8 in. fire loop that receives water from the NGCC underground fire loop. Two separate fire water supply lines feed the PCC plant fire loop. Isolation valves are provided so that fire water supply is available if a portion of the fire loop has to be isolated. The fire water will be supplied at approximately 11.5 barg and at ambient temperature. The system is sized to supply the design maximum water demand for automatic suppression system plus 114 m^3/hr for fire hydrants or hose stations based on National Fire Protection Association (NFPA) requirements.

The fire loop provides firefighting water to yard hydrants, hose stations, and the automatic wet pipe sprinkler system through service water branch lines. The only automatic suppression system is the wet pipe sprinkler system covering the CO_2 compressor area.

Fire hydrants are spaced at approximately 250 ft (76 m) intervals around the fire loop. The hydrants are located in accordance with NFPA 24 and local fire codes. Hose houses are provided for each hydrant. The fire protection system is augmented by portable fire extinguishers located throughout the plant.

The plant fire alarm system includes local fire alarms, automatic fire and gas detectors, and a fire- and gas-detection programmable logic controller (PLC), as required by design codes. The PLC interfaces with the plant DCS.

5.7 Compressed Air

The compressed air system is shown in P&IDs 26301-000-M6-PA-00001 and 00002 in Appendix A. The data sheet is shown in 26301-000-3SD-MCRA-00001 and -00002 in Appendix G.

The compressed air system (PA) supplies instrument air (IA) and service air (SA) for all consumers within the PCC plant. There is no interface with the NGCC compressed air system.

The PA system consists of two 100% air-cooled compressors, two 100% air dryers, and a single air receiver. The air receiver knocks out any water droplets and is of sufficient size to provide instrument air (IA) for 10 minutes at specified pressure in the event of a feed failure. The compressed air system supplies dry, oil-free air at 7.00 barg and a dewpoint of -40°C and can operate at 100% humidity. Both IA and SA are supplied dry air. SA connections are provided in each of the seven utility stations located within the plant. A hose connection for SA is provided at each utility station. Also provided is a connection for a temporary portable compressor, upstream of the dryers. The maximum allowable discharge pressure from this portable compressor is 13.8 barg.

Low-priority users (for example, SA) are automatically shut off in case of low IA system pressure. Both air compressors are connected to emergency power; however, only one runs on emergency power at a time. The continuous IA requirement is based on the modulating control valves being in service and the on/off valves not stroking. For the intermittent IA demand, the flow rate is based on typical sizing flow rate, assuming time-averaged stroking activity for the control valves—including dryer purge air, plus a 10% allowance. For plant air, the demand is based on an estimate of using a few pneumatic tools during maintenance.

5.8 Inerting Gases

Inerting gas is required at the PCC plant for system and equipment layup, as needed. The PCC plant inerting gases needs are supplied using nitrogen gas cylinders. The system is shown in P&ID 26301-000-M6-PG-00001 in Appendix A.

The rich amine storage tank (MT-101) and the lean amine solvent storage tank (MT-102) will have nitrogen blanketing. The supply header pressure to the storage tanks is controlled to approximately 2 barg. A nitrogen connection is also provided at each of the plant's seven utility stations. The nitrogen gas system supply header pressure to the utility stations is controlled to approximately 5 barg. Reserve nitrogen cylinders are maintained at the PCC plant.

5.9 Softened Water/ZLD Distillate

To improve amine absorption of CO_2, softened water is required to cool the flue gas in the primary and secondary foggers before it enters the absorbers. A 17.1 kg/sec (61,456 kg/h) water stream at 50.5°C is modeled; distillate from the zero liquid discharge (ZLD) system at NGCC is used for this purpose. In addition, the ZLD distillate provides makeup to the PCC process water tank, MT-104, when required. Normally, the PCC plant operates in a water-balanced mode requiring no makeup water; however, during startup and transition periods when the PCC plant may be out of water balance, process makeup is required.

As an alternative to using ZLD distillate, cooling tower blowdown was considered for use in the primary fogger. Using this water will result in savings due to reduced load on the ZLD system, but there was concern about potential corrosion because the quality of this water is poor. Further evaluation of using cooling tower blowdown should be performed during pilot plant phase or during EPC detail engineering.

5.10 Waste Collection and Drains

5.10.1 Amine Waste

The amine waste system is shown in P&ID 26301-000-M6-XW-00001 in Appendix A.

The amine (35% MEA) solvent needs to be drained from the PCC plant at shutdown and from individual equipment for maintenance activities.

For shutdown, MEA circulation continues without flue gas flow to ensure that the MEA solution is lean throughout all of the equipment. The equipment is pumped out to a minimum level directly or through other vessels to the lean amine solvent storage tank. The remaining MEA solution is drained by gravity through the amine waste piping to the amine waste sump MT-103. From the sump, the amine solution is pumped through filters to the Amine Solvent Storage Tank MT-101. Two 100% amine waste-forwarding pumps and two 100% amine waste filters are provided. The amine solvent storage tank has been sized to accommodate the MEA solution from all plant equipment and piping.

The amine waste sump provides the opportunity to test the drained amine to ensure that it is of acceptable quality before it is pumped to the storage tank. This sump has been sized to accommodate the entire contents of the largest vessel (one CO_2 absorber vessel). If the drained MEA solution is not acceptable, it can be pumped from the amine waste sump directly to road tankers for off-site disposal.

5.10.2 Wastewater

The wastewater system is shown on P&IDs, 26301-000-M6-XW-00002 and -0003 in Appendix A.

Any wastewater effluent from the PCC plant area open drains is routed to the wastewater sump. Two 100% wastewater forwarding pumps are provided. The wastewater effluent may contain oil; therefore, all wastewater from this sump is routed to an underground oil/water separator. This separator removes any oil to meet $\leq$1.5 ppm oil content. The oil collected in its reservoir is manually drained for off-site disposal and the clean water routed to the NGCC ZLD system.

The wastewater sump provides the opportunity to test the drained effluent and ensure that it is of acceptable quality before it is pumped out. This sump has been sized to accommodate the entire contents of the largest vessel (one CO_2 absorber vessel). If the drained effluent is not acceptable, it can be pumped from the wastewater sump directly to road tanks for off-site disposal.

5.11 Wastewater Treatment

No wastewater treatment facility is provided. Amine-laden water from the process is recycled back into the process within the PCC plant. Steam condensate is returned to the NGCC. Clean service water runoff and stormwater are discharged to the NGCC site drainage pond. Sewage from the PCC plant is collected and sent to the municipal sewer system through the discharge line from the NGCC site.

5.12 Piping and Insulation

5.12.1 Piping

The PCC plant piping design is governed by ASME B31.3, plumbing code, NFPA, and/or local codes as applicable. The line designation table is shown in Appendix H and piping material classes are given in the piping class selection document (26301-000-3DS-P72G-00001 in Appendix F).

Piping is designed to resist plant-specific loads. Typical loading for a piping system includes the following:

- Dead loads
- Live loads
- Wind loads
- Seismic loads
- Temperature and pressure loads
- Test loads

The plant is arranged to minimize the crossing of piping and electrical commodities.

Above-ground piping is routed as directly as possible to its destination, except for the addition of piping flex

loops. Routings avoid areas designated as equipment or instrument maintenance space, vertical access hatches, and maintenance crane or monorail travel space. Piping routed overhead maintains a minimum 6 ft, 9 in. headroom clearance above main floor level and walkways. Pipe routed above stairways maintains a minimum 7 ft headroom clearance above the nearest tread. Except for sloped piping, a two-level scheme is maintained to allow pipes to clear one another when a change in direction occurs in the routing path. Piping is routed above lighting fixtures located over floor access aisles.

Pipe racks support pipe routings between structures for piping requiring inspection or maintenance. Pipe rack that crosses access ways or roadways maintains a 20 ft minimum clearance.

Buried piping is routed in a common corridor between structures to minimize construction and traffic crossings.

Piping systems generally include high-point vents and low-point drains. Piping in unheated areas is either heat traced or designed for draining. Where feasible, steam piping is sloped in the direction of steam flow, with a minimum slope of 1/8 in. per foot. This general design requirement may be modified if it becomes impractical to maintain strict adherence; however, piping is designed to drain properly.

5.12.2 Insulation

Parts of the PCC plant requiring insulation to reduce heat loss or afford safety to personnel are thermally insulated. Piping, ducts, and other hot surfaces within reach of personnel are limited to 60°C regardless of ambient conditions or have standoffs or other protection in combination with insulation to meet this standard.

Thermal insulation materials are calcium silicate, fiberglass, or mineral fiber. Asbestos materials are prohibited. A jacket or suitable coating is provided on the outside surface of the insulation. Where a hard-setting compound is used as an outer coating, it is non-absorbent and non-cracking. Thermal insulation remains chemically inert even when saturated with water. Insulation system materials, including jacketing, have a flame spread rating of 25 or less when tested in accordance with ASTM E 84.

Insulation outside buildings and structures is weatherproofed using longitudinal laps below pipe centerline, downward end laps on vertical piping, and mastic plastic cements at penetrations. Removable insulation is provided at flanged valves 2-1/2 in. and larger.

Anti-sweat insulation with a moisture-proof barrier is furnished only in occupied (finished) areas. A fluid temperature of less than 10°C is the basis for using anti-sweat insulation.

Insulation at valves, pipe joints, and other points where maintenance access may be required is removable with minimal disturbance to the pipe insulation. At each flanged joint, the molded material terminates on the pipe at a distance from the flange equal to the overall length of the flange bolts to permit their removal without damaging the molded insulation. Above-ground insulated piping includes suitable material cladding. At joints, the sheets are sufficiently lapped to prevent moisture from penetrating the insulation.

Design temperature limits for thermal insulation are based on system operating temperature during normal operation.

Chapter 6: PCC Plant Electrical Distribution System

6.1 General

The Sherman PCC plant electrical distribution system is shown in single-line diagrams 26301-000-E1-0000-00001, 26301-000-E1-0000-00002, and 26301-000-E1-0000-00003 (Appendix K). Cable routing plans are shown in drawings 26301-000-ER-0300-00001, 26301-000-ER-0310-00001, and 26301-000-ER-0310-00002 (Appendix L).

The primary source of power to the PCC plant is from the Sherman natural gas–combined cycle (NGCC) 138 kV switchyard through high-voltage underground cables connected to a 50 MVA, 138/13.8 kV step-down transformer. This transformer is connected to the PCC plant 13.8 kV medium-voltage (MV) switchgear through an in-feed cable installed in a precast trench with sand bedding. The PCC plant receives its backup power (for maintenance only) from the NGCC 4.16 kV switchgear through a 3 MVA, 4.16/13.8 kV dead-time transformer, which is connected to the 13.8 kV switchgear through a cable in a sand-filled precast trench.

The 13.8 kV switchgear is the primary power feeding source for all plant loads. The 13.8 kV system feeds adjustable-speed drive systems for motor loads greater than 3,500 kW. Motors greater than 150 kW but less than or equal to 3,500 kW are fed from the 4.16 kV switchgear through a step-down transformer inside the boundary Limit (B/L). The 13.8 kV system also feeds the 480 V loads through redundant load center transformers connected to redundant 480 V load centers for further power distribution.

In the event of a complete loss of in-feed power, critical loads required to safely shut down the plant are fed from the DC and AC uninterruptible power supply (UPS) system. This system has redundant batteries, battery chargers, and inverters.

In the event of an extended loss of in-feed power, the plant has a 600 kWe/750 KVA standby emergency diesel generator (EDG). The standby diesel generator is connected to the plant's essential motor control center (MCC), which distributes emergency power to the plant's essential loads.

Power factor correction equipment is connected to the 13.8 kV switchgear. The power factor correction capacitors are designed with an automatic power factor controller to maintain the plant power factor at approximately 1.0.

The plant uses the following nominal distribution system voltages:

- 13.8 kV, three-phase, 60 Hz
- 4.16 kV, three-phase, 60 Hz
- 480 Vac, three-phase, 60 Hz, TN-S (separate neutral and protective earth)
- 480/277 Vac, three-phase, 60 Hz, TN-S (separate neutral and protective earth)
- 120/208 Vac UPS
- 125 Vdc
- The main electrical distribution components are located in or adjacent to the plant electrical building, as shown in Figure 6-1.

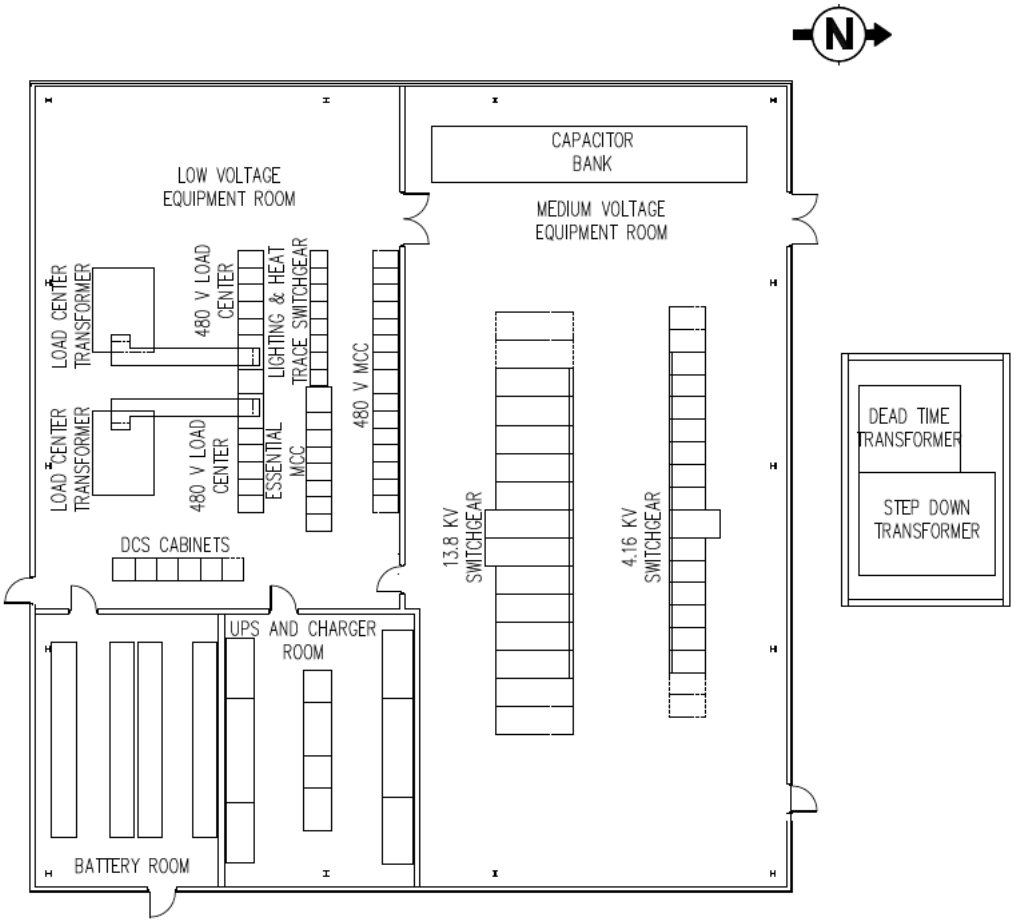

Figure 6-1

PCC Plant Electrical Building Layout

6.2 Switchgear

The PCC plant 13.8 kV and 4.16 kV metal clad switchgears are located indoors in the electrical building. The 13.8 kV switchgear uses manually initiated, load-limited, make-before-break transfer to transfer power between the maintenance source and the normal power source without service interruption. The 4.16 kV switchgear has a single in-feed.

The 480 V load centers and MCCs are located indoors in the electrical building and are of metal-enclosed (sheet-steel) construction. The load centers and MCCs have two busbar sections with a coupling breaker and two 100% in-feeds. An automatic fast bus-transfer provided with the load center closes the coupling breaker in the event of a loss of one of the in-feeds.

The plant also has a 480 V essential MCC with two 100% normal in-feeds and an emergency in-feed from the standby diesel generator. Interlocks are provided to ensure safe operation.

Low-voltage (LV) panelboards are located throughout the plant to supply power to convenience receptacles, lighting, and heat tracing. Indoor panelboards are metal enclosed (sheet-steel construction), and outdoor panelboards are of stainless steel construction, IP41 (minimum), and rated for use according to the hazardous area classification.

All switchgear is designed for future expandability, has electrical protection to isolate electrical faults as close as possible to the fault location, and communicates with safety and automation systems via digital bus.

The equipment location plan for the switchgear building is shown in drawing 26301-000-E4-0310-00001, which is attached at the end of this chapter.

6.3 Transformers

The PCC plant's transformers have copper windings, are sized to feed the plant's worst-case operating loads plus contingency for future growth and are designed according to ANSI standards. Main design features are summarized in Table 6-1.

Table 6-1

Transformer Ratings and Design Features

Transformer	Rating	Feed Source (input)	Feed Source (output)	Location
PCC plant transformer	50 MVA, 138 kV/ 13.8 kV, ONAN YNd11, mineral oil filled, deenergized tap changer	NGCC 138 kV switchyard	PCC plant 13.8 kV switchgear	Outdoors within PCC B/L
Dead-time transformer	3 MVA, 4.16 kV/ 13.8 kV, YNd1, ONAN, deenergized tap changer	NGCC 4.16 kV switchgear	PCC plant 13.8 kV switchgear	Outdoors adjacent to electrical building
Step-down transformer	15 MVA, 13.8 kV/ 4.16 kV, Dyn1, ONAN, oil-filled, deenergized tap changer	PCC plant 13.8 kV switchgear	PCC plant 4.16 kV switchgear	Outdoors adjacent to electrical building
Load center transformers	2,500 kVA, 13.8 kV/ 0.48 kV cast resin, Dyn1, deenergized tap changer	PCC plant 13.8 kV switchgear	480 V load centers	Indoors in electrical building

6.4 Power Factor Correction

The PCC plant's MV power factor correction equipment consists of a multistage, switched capacitor bank housed in a metal enclosed cubicle. The capacitor bank is located in the electrical building.

The capacitor bank has a power controller that automatically switches the individual capacitors ON or OFF to provide the required MVAR support to maintain the system power factor at the plant's B/L at a nominal 1.0. A four-stage capacitor bank with a total of 20 MVAR support was selected to cover various operating scenarios. The selected capacitor stages are listed in Table 6-2.

Table 6-2

Power Capacitor Stages

Stage	MVAR
A	0.5
B	2.5
C	5.0
D	12.0
Total	**20.0**

Note: Number of stages and MVAR values require adjustment during detailed design to suit final requirements.

The capacitor bank comprises the following:

- Power components. such as isolating switch, earth switch, surge arrestor, individual capacitor stage vacuum switch, capacitors, current limiting reactor, control voltage transformer, and current and voltage transformers.
- Digital power factor controller.
- Protection and metering. Protection for the capacitor includes overload, undervoltage, overvoltage, external fuse, and unbalance.

6.5 UPS Power

The PCC plant has emergency power sources to provide power if both normal and backup power are unavailable. Emergency power is provided through the UPS system located indoors in the electrical building. The UPS system has two 100% fully redundant batteries, battery chargers, inverters, and two 100% in-feed breakers to all sub-switchgear, as shown in Figure 6-2.

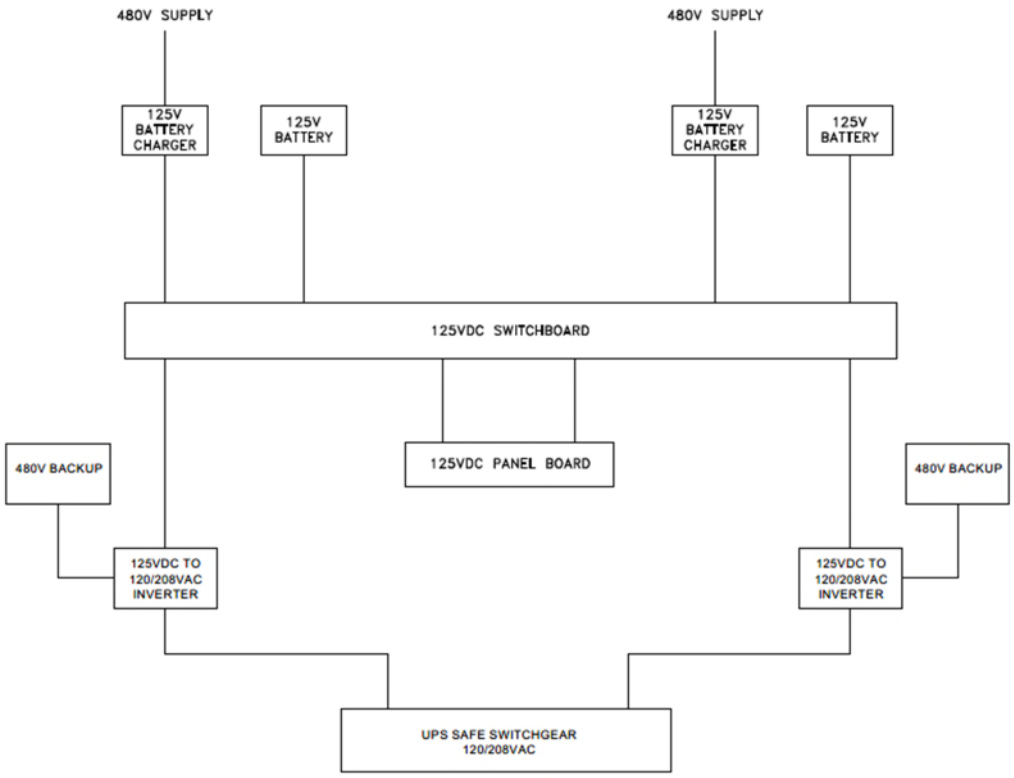

Figure 6-2

PCC Plant UPS System Diagram

6.6 Emergency Diesel Generator

The plant also has a 600 kWe/750 KVA standby diesel generator to provide power during an extended loss of in-feed power. The standby diesel generator is connected to the plant's essential MCC. Upon loss of voltage on both 480 V load center buses, an emergency condition will be initiated that opens both incoming breakers to the essential MCC, automatically starts the diesel generator using the 24 V battery provided with the diesel generator, and automatically closes the diesel generator breaker. Plant essential and emergency loads that do not disconnect on transfer to the EDG will be re-powered as soon as the EDG breaker closes. Presently identified loads that will be reenergized on EDG breaker closure are the UPS system, essential lighting, essential heat tracing, and essential heating, ventilation, and air conditioning (HVAC).

On restoration of normal power, the plant operator will issue a trip generator breaker command, which will open the diesel generator breaker and close the operator-selected incoming breaker to the essential MCC in a break-before-make sequence.

The diesel generator will be provided with main protective trips such as overspeed, overload, overvoltage/undervoltage, and low-low oil pressure.

6.7 Electrical Loads Summary

Electrical loads for the PCC plant were estimated for the operating scenarios listed below. They are summarized in Table 6-3.

Maximum Operation: This mode provides estimated load for system sizing and is based on design loads of equipment (that is, includes the margins) and a utilization factor of 1.0.

Continuous Operation: This mode provides estimated load when the PCC is operating at its intended design

base, that is, removing the target 85% CO_2 from 704 kg/s flue gas.

Standby Operation: This mode provides estimated loads when CO_2 capturing is not occurring, but the capturing will begin shortly (say, within one shift). In this mode, some of the facility pumps will be operating in recirculation mode.

UPS Load: Maximum load during the worst case (initial shutdown) of the PCC facility.

Essential Operation: This mode provides the maximum load when all normal power to the PCC facility is off and the emergency diesel generator is powering the essential loads described in section 6.6.

Details of major electrical consumers are provided in Appendix M.

Table 6-3

Electrical Loads Summary

Scenario	Load (kW)
Maximum Operation	~42,000
Continuous Operation	~30,000
Standby Operation	~5,000
UPS Operation	~65
Essential Operation	~470

Note: Values are conservatively estimated but are not to be construed as guarantees.

6.8 System Studies

The electrical system studies performed for the power plant design were reviewed to determine the impact of the PCC plant's electrical system design and the suitability of the selected electrical equipment. The review was performed based on the worst-case input parameters and indicated that the selected equipment provides stable, reliable, and expandable plant power. The system studies summary is outlined in Table 6-4.

Table 6-4

Electrical System Studies Summary

Study	Purpose	Result
Short-circuit study	To select the interrupting rating of the circuit breakers.	Selected equipment will safely withstand and interrupt the worst-case fault conditions and have suitable margin.
Load flow study	To validate that voltages are within required tolerances during different operating conditions and to validate that all equipment is properly rated for the electrical load.	Voltages remain within acceptable tolerances under each operating condition.

Study	Purpose	Result
Transient stability study	To validate that the largest motors on each bus are capable of accelerating their loads and to determine power system response to simulated system disturbances (electrical faults).	All motors safely accelerate their loads, and the electrical system can fully recover after clearing system disturbances.
Harmonic distortion analysis	To ensure that harmonic distortion levels on the electrical network are within acceptable tolerances.	Total harmonic distortion is within acceptable levels using harmonic filters provided with the adjustable-speed drives.

6.9 Hazardous Areas Classification

Electrical equipment and bulks are suitable for installation for their exposed hazards. Indoor electrical equipment and bulks are classified as nonhazardous. See document 26301-000-U5Y-0000-00001 (Appendix L) for detailed hazardous classifications.

6.10 Cable and Raceway

MV and LV power and control cables use stranded copper conductors. MV power cables are cross-linked polyethylene (XLPE) insulated, with polyvinyl chloride (PVC) jackets, and are designed with insulation levels commensurate with the applied grounding method. LV power cables are XLPE insulated, copper screened, and PVC over-sheathed. LV control cables are PVC insulated, with PVC over-sheath.

Aboveground circuits are designed for installation in cable ladder or conduit. Underground circuits are installed in pre-cast, sand-filled cable trenches.

6.11 Earthing and Lightning Protection

The earthing system is designed to obtain low-impedance earth paths for earth faults, static discharges, and lightning protection and to meet electromagnetic conductivity (EMC) requirements. The main earthing system consists of buried stranded copper conductors connected at four points to the NGCC earth grid.

A separate neutral and protective conductor is provided for the 480 V system. The MV system is earthed through surge arresters and acts as an ungrounded system.

Lightning protection is provided for the absorbers, strippers, and buildings.

6.12 Lighting

The plant has normal, emergency, and essential lighting. Dedicated lighting columns are used for street and flood lighting.

Lighting levels are as recommended in IES illumination level standards for work areas and meet applicable Occupational Safety and Health Administration (OSHA) guidelines.

Outdoor lighting fixtures are suitable for Zone 2 hazardous areas and are controlled with photocell-controlled switching circuits. Emergency lighting (escape way lighting) is powered from the 120/208 V UPS system. In addition to emergency lighting, lighting required for emergency egress is automatically transferred to the standby diesel generator in the event of power loss.

6.13 Electrical Interfaces

Electrical interfaces between the PCC and NGCC are described in Chapter 5 of this report.

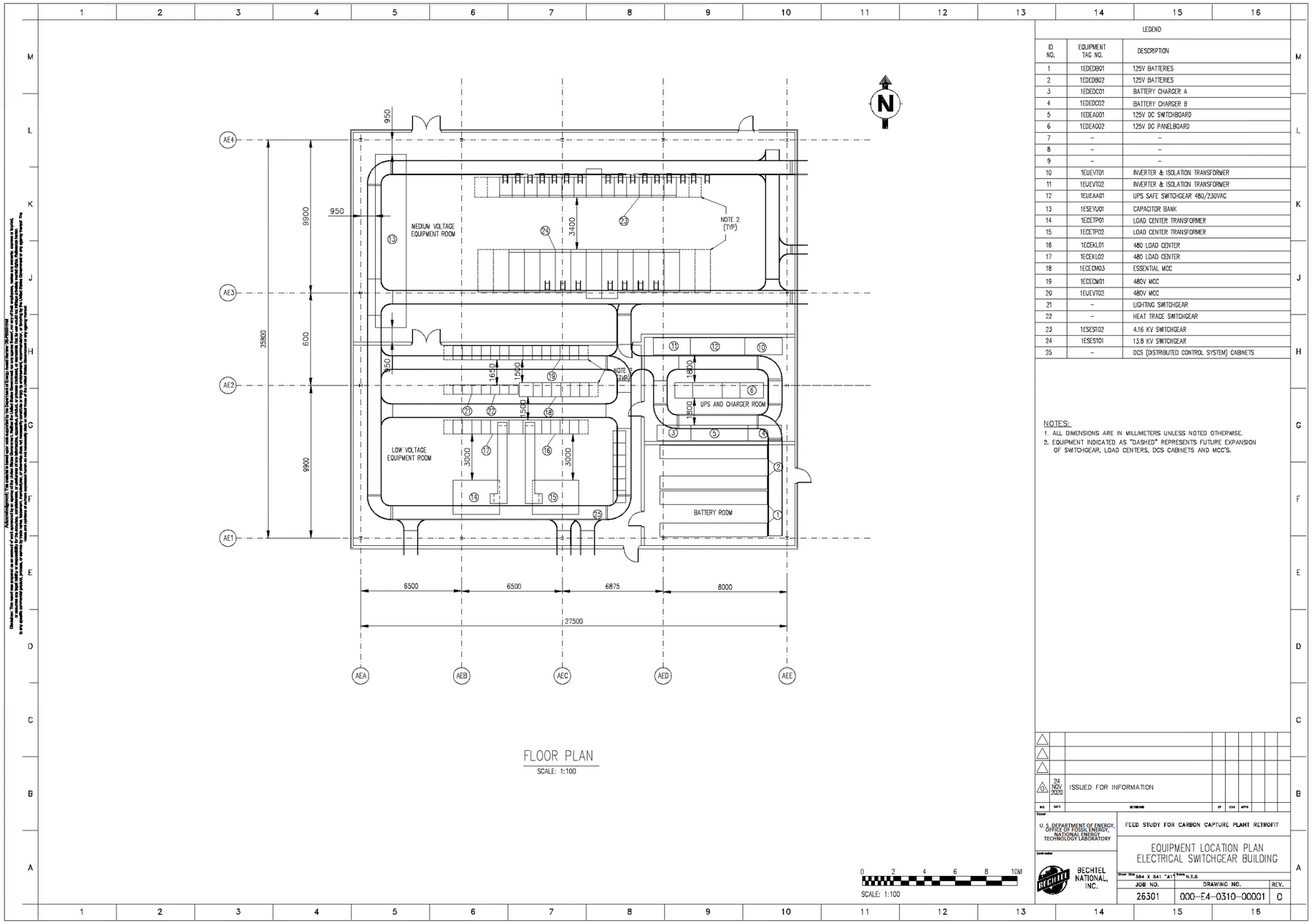

LEGEND

ID NO.	EQUIPMENT TAG NO.	DESCRIPTION
1	1EDEDB01	125V BATTERIES
2	1EDEDB02	125V BATTERIES
3	1EDEDC01	BATTERY CHARGER A
4	1EDEDC02	BATTERY CHARGER B
5	1EDEA001	125V DC SWITCHBOARD
6	1EDEA002	125V DC PANELBOARD
7	–	–
8	–	–
9	–	–
10	1EUEVT01	INVERTER & ISOLATION TRANSFORMER
11	1EUEVT02	INVERTER & ISOLATION TRANSFORMER
12	1EUEAA01	UPS SAFE SWITCHGEAR 480/230VAC
13	1ESEYU01	CAPACITOR BANK
14	1ECETP01	LOAD CENTER TRANSFORMER
15	1ECETP02	LOAD CENTER TRANSFORMER
16	1ECEKL01	480 LOAD CENTER
17	1ECEKL02	480 LOAD CENTER
18	1ECECM03	ESSENTIAL MCC
19	1ECECM01	480V MCC
20	1EUEVT02	480V MCC
21	–	LIGHTING SWITCHGEAR
22	–	HEAT TRACE SWITCHGEAR
23	1ESES102	4.16 KV SWITCHGEAR
24	1ESES101	13.8 KV SWITCHGEAR
25	–	DCS (DISTRIBUTED CONTROL SYSTEM) CABINETS

NOTES:
1. ALL DIMENSIONS ARE IN MILLIMETERS UNLESS NOTED OTHERWISE.
2. EQUIPMENT INDICATED AS "DASHED" REPRESENTS FUTURE EXPANSION OF SWITCHGEAR, LOAD CENTERS, DCS CABINETS AND MCC'S.

NO.	DATE	REVISION	BY	CHK	APPR
0	24 NOV 2020	ISSUED FOR INFORMATION			

Owner: U.S. DEPARTMENT OF ENERGY, OFFICE OF FOSSIL ENERGY, NATIONAL ENERGY TECHNOLOGY LABORATORY

Contractor: BECHTEL NATIONAL, INC.

FEED STUDY FOR CARBON CAPTURE PLANT RETROFIT

EQUIPMENT LOCATION PLAN
ELECTRICAL SWITCHGEAR BUILDING

Size: 584 X 841 "A1" Scale: N.T.S

JOB NO.	DRAWING NO.	REV.
26301	000-E4-0310-00001	0

Acknowledgement: This material is based upon work supported by the Department of Energy [Award Number DE-FE0031584].
Disclaimer: This report was prepared as an account of work sponsored by an agency of the United States Government. Neither the United States Government nor any agency thereof, nor any of their employees, makes any warranty, express or implied, or assumes any legal liability or responsibility for the accuracy, completeness, or usefulness of any information, apparatus, product, or process disclosed, or represents that its use would not infringe privately owned rights. Reference herein to any specific commercial product, process, or service by trade name, trademark, manufacturer, or otherwise does not necessarily constitute or imply its endorsement, recommendation, or favoring by the United States Government or any agency thereof. The views and opinions of authors expressed herein do not necessarily state or reflect those of the United States Government or any agency thereof.

26301-000-E4-0310-00001 Switchgear Building Equipment Location Plan

Chapter 7: Control Systems

7.1 Overall Control Systems Architecture

The Sherman PCC plant is operated from the central control room (CCR) in the control/administration/workshop/laboratory building. An operator stationed in the CCR has access to the following systems through the operator stations:

- Distributed control system (DCS)
- Process shutdown (PSD) system
- Emergency shutdown (ESD) system
- Fire and gas (F&G) detection system
- Continuous gas monitoring system (CGMS)

The operator can also access selected information from the vibration monitoring system (VMS) through the operator stations.

The operator also has access to the following systems from the CCR:

- ESD action panel
- F&G action panel
- Closed-circuit television (CCTV) system
- Phone and ultra-high-frequency (UHF) radios

7.2 Controls Philosophy and Approach: Human Factors

7.2.1 General Control Philosophy

The general control philosophy allows for control of major PCC plant functions, with priority placed on personnel safety and equipment protection followed by plant availability.

A single qualified operator stationed in the CCR controls the plant with the support of one or more qualified plant operators as needed during different operational modes. The plant incorporates sequences that automatically start it once all the systems have been filled, vented, and lined up in accordance with detailed operating procedures. The plant can also be shut down in automatic mode.

Normal operation is controlled automatically. Adjustable setpoints and manual control of devices outside the automatic control routines are incorporated where possible to maximize operating flexibility. Despite this, interlock logic prevents the operator from creating an undesirable operating condition that could endanger personnel or cause equipment damage. When in operation, the PCC will receive the design amount of flue gas and associated CO_2. This results in the normal operating mode to be at steady state with limited process adjustments. A multi-element control system is included to allow for potential future operating conditions when the PCC operates at part load for extended periods.

7.2.2 Normal Operation

Under normal operation, the PCC plant takes 704 kg/s flue gas from the Sherman NGCC plant to the absorbers. Both flue gas blowers are normally in service, providing flue gas to the absorbers. The HRSG stack dampers are partially open, and the blower suction dampers are fully open. The PCC isolation dampers and the blower isolation dampers are fully open.

The flue gas flow from Sherman NGCC to PCC is measured and the blower speed modulated to control this flow and minimize pressure variations at the HRSG outlets and in the ductwork. If the pressure rises at the HRSG outlet, the HRSG stack dampers are opened by the NGCC DCS. The flue gas pressure control scheme includes single-element and three-element control.

Manual control of the blower speeds and control dampers is not allowed due to the potential of tripping the power plant combustion turbine on high exhaust pressure. However, the operator can set a maximum capability limit for each absorber if the absorber capacity is limited for some reason. The operator can also set a flow bias between the two absorbers if higher flow is desired in one of the absorbers.

The flue gas is cooled by water foggers in two stages prior to entering each absorber at approximately 51°C. In each cooling stage, a spray water control valve throttles the flow to the cooler to control the temperature of the

flue gas downstream of the cooler. A feed-forward control scheme using flue gas flow and fogger inlet temperature reduces variability in the temperature leaving each cooler as well as the chance of excessive spray water due to time lag associated with temperature measurement.

The amount of lean amine inlet flow to the absorber is set at the design value unless long periods of part load (less than 60% load for weeks) are planned. Rich amine flow from the absorber to the stripper is controlled to maintain a constant level in the absorber. A portion of the rich amine flow is diverted, heated, and flashed to create semi-lean amine, which is returned directly to the absorbers. This system can be bypassed, however, and the system run using only lean amine.

Wash water to remove entrained amines from the off-gas is controlled at a constant flow rate into the water wash bed in the absorber. The amine concentration in the wash water system increases over time. To keep the amine concentration in the water wash system at a low level, a continuous flow of fresh process water is added to the system. The level of the water wash chimney tray is controlled by the wash water bleed valve, which sends the excess water to the lean amine system through the bleed line.

Excess water that may be generated by condensation from the flue gas is discharged to the lean amine system. The excess water is boiled off in the stripper and then removed from the stripper overhead, where the level of amine concentration is lowest, to minimize waste production and loss of amine from the process. When water is needed, it is added to the water wash system from the process water system. The makeup water in the water wash system cascades through the bleed line to maintain the proper level in the absorber bottom.

Low-pressure (LP) steam flow rate to the reboiler is controlled in proportion to the rich amine flow rate entering the stripper column. The steam flow rate is modified as needed to maintain the proper amount of reflux in the stripper overhead system.

Gas leaving the stripper contains some water and solvent. It enters the stripper overhead cooler where it is cooled, condensing the water and solvent. The gas and condensate then enter the stripper reflux drum, where they are separated.

The reflux liquid from the stripper reflux drum is pumped back to the top of the stripper reflux section and maintained in proportion to the gas stream flow to control overhead solvent loss with the CO_2 product. Excess liquid is pumped back to the process water surge tank. The stripper reflux system is shown in Figure 7-1.

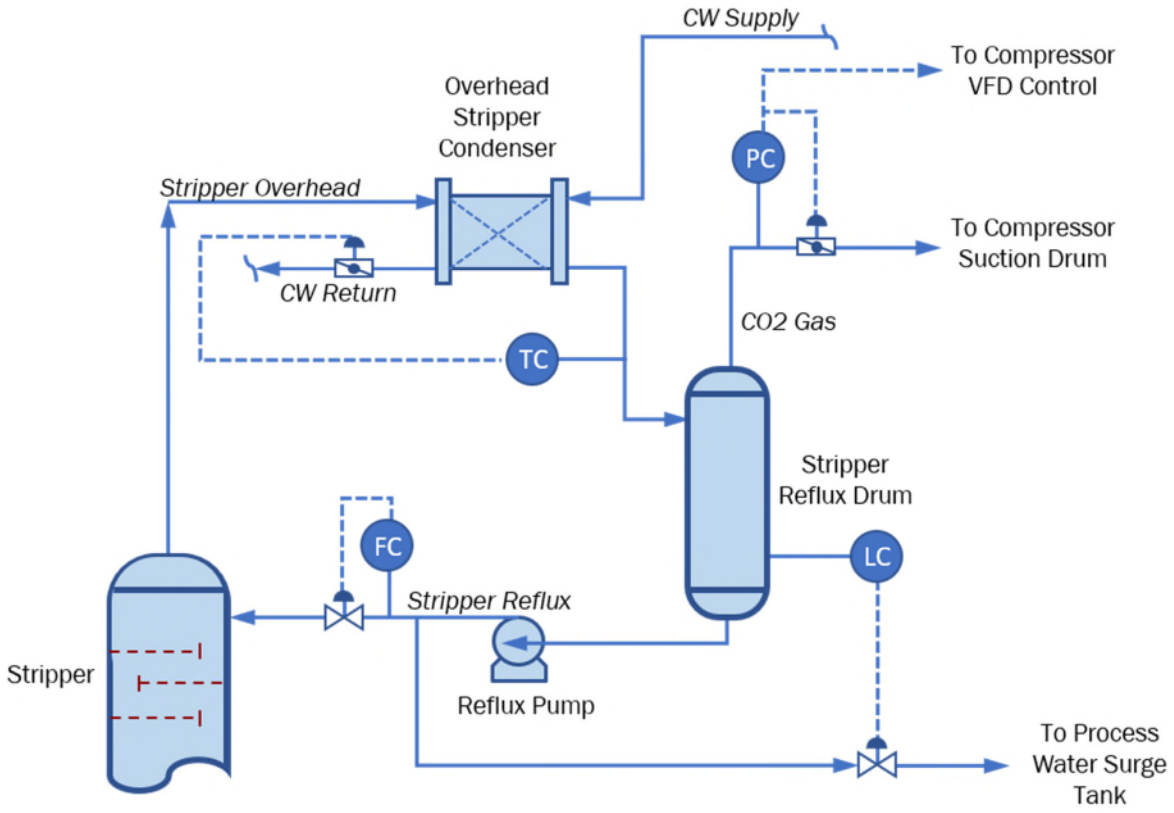

Figure 7-1

Stripper Reflux System

Gas leaving the stripper reflux drum goes to the CO_2 compression system. A constant backpressure in the stripper reflux drum (and consequently the stripper) is maintained by the compressor speed, which is controlled by a VFD.

The inlet to each stage of the CO_2 compressor has a knockout drum to remove condensed liquid from the gas stream. The liquid is recycled to the process water system in a sequential let-down scheme that minimizes any venting of CO_2 gas from the storage tank.

The CO_2 gas from each compressor stage passes through a steam generator, where it is cooled and used to heat boiler feedwater (BFW), creating interstage steam. The interstage steam is used to generate the semi-lean amine. The steam generators are controlled at a constant level and pressure.

Intercoolers at the inlet of the second and third compressor stages maintain the required CO_2 temperature entering each stage.

Prior to entering the compressor third stage, the CO_2 gas enters the CO_2 dryers to remove moisture to <50 ppm (wt). The output from the dryers is monitored by redundant analyzers, and an alarm is activated if moisture levels approach the required product specification. The CO_2 product is also monitored by redundant moisture and O_2 analyzers. If the levels exceed the required product specification at either location, the CO_2 product send-out pump is stopped and the CO_2 product shutdown and control valves are closed. The CO_2 is vented from the CO_2 surge drum until the product quality meets the required specification.

After leaving the final stage of the compressor, the CO_2 product is cooled to a liquid in the CO_2 cooler and sent to the CO_2 surge drum. Non-condensable gases in the CO_2 surge drum are vented to the absorber stacks by the vent valve on high pressure in the drum.

The CO_2 product send-out pump forwards the CO_2 product to the battery limit as a supercritical fluid. The flow to a pipeline is controlled at a steady rate, with reset from the CO_2 surge drum level.

7.2.4 Human Factors

7.2.4.1 Human-Machine Interface

The DCS has a human-machine interface (HMI) in the CCR. Preliminary considerations for CCR human factors include the following.

Hardware

- Dual-screen operator station and engineering workstation (EWS)
- Single-screen historian and CGMS data acquisition and handing system (DAHS)

Operational Control

- Automatic control of the PCC plant (manual control is not normally required)
- Unit startup and shutdown (at least weekly) using automatic sequence; manual control is not normally required

Operational Functions

- Alarm monitoring and acknowledgment (including the ESD, PSD, and F&G detection systems)
- Historian/historical data retrieval, if required for operating purposes
- Log printing
- Primary fault finding
- Tagging out/coordinating permit recording functions (if assigned to the operator or shift supervisor)

Engineering Functions

- EWS software, including configuration (logics and graphics)
- Alarm setup and management
- Detailed fault finding
- Historian maintenance (including DVD and storage media replacement)
- Serial link and Ethernet link configuration
- Periodic updates of anti-virus software
- User account management
- Information management system (IMS) server configuration

7.2.4.2 Operations During Upset Conditions

The plant is designed for fully automatic control during normal operation. During an upset, automatic overrides attempt to correct the problem prior to reaching PSD conditions. Further, redundant backup pumps automatically start on loss of the primary pump. Manual control may also be possible.

In the event of a PSD, the affected process is isolated. In some cases, the plant may continue operating; in other cases, it shuts down. Activity falls to fault finding by the operator and plant engineering.

7.2.4.3 CGMS Shelter and Compressor Building Analyzer Room

The CGMS shelter and compressor building analyzer room are normally unmanned. The two main activities in these locations include analyzer system maintenance and grab sampling.

Maintenance

- Troubleshooting failed calibration of O_2, H_2O, CO, and CO_2 analyzers (infrequent)
- Fourier transform infrared (FTIR) spectroscopy analyzer calibration (rare)
- Periodic calibration of conductivity, pH, dissolved oxygen (DO), and silica analyzers (weekly or monthly)
- Online gas chromatograph (OGC) maintenance (infrequent)
- Replacement of calibration gas cylinders (infrequent)

Centralized Grab Sampling

Grab sampling of centralized liquids and gases is anticipated in addition to the analyses performed by the online analyzers. The sampling system's design provides centralized access in the compressor building analyzer room for the most commonly sampled streams. For a list of centrally analyzed streams and analyzers, see Section 7.6.2.

Centralized grab sampling reduces any variation between grab samples that results from plant fluctuations because the samples are taken over a shorter overall time frame than if the operator walks to each point locally. This also facilitates more frequent sampling if required for a particular operating scenario. The time required to take the samples and the potential exposure of the operator to hazards are also minimized because it is not necessary for the operator to climb the columns or be in direct contact with process equipment while taking the samples.

Local Grab Sampling

Infrequent local grab sampling is anticipated. The primary sampling requirement comes from the amine waste and wastewater sumps.

Local grab samples are provided at the points listed in Table 7-1.

Table 7-1

Local Grab Sample Points

Grab Sample Point Description	Grab Sample Point Type
Stripper Reflux Water	Standard grab point
Amine Waste Sump	Standard grab point
Reclaimer Vapor	Closed grab sample with cooling
Reclaimer Waste	Closed grab sample with cooling
CO_2 Compressor First-Stage Inlet	Closed grab sample
CO_2 Compressor Second-Stage Inlet	Closed grab sample
CO_2 Compressor Third-Stage Inlet	Closed grab sample with heating
CO_2 Surge Drum Vapor	Closed grab sample with heating
ME-101 Cooling Water Outlet	Standard grab point
ME-102 Cooling Water Outlet	Standard grab point
ME-104 Cooling Water Outlet	Standard grab point
ME-111A Cooling Water Outlet	Standard grab point
ME-111B Cooling Water Outlet	Standard grab point
ME-111C Cooling Water Outlet	Standard grab point
ME-111D Cooling Water Outlet	Standard grab point
ME-113 Cooling Water Outlet	Standard grab point
ME-115 Cooling Water Outlet	Standard grab point
ME-117 Cooling Water Outlet	Standard grab point
Process Water Surge Tank	Standard grab point
Wastewater Sump	Standard grab point
Amine Sump	Standard grab point

ME-112 Blowdown	Standard grab point
ME-114 Blowdown	Standard grab point
ME-116 Blowdown	Standard grab point
Lean Amine Storage Tank	Standard grab point
Amine Storage Tank (concentrated)	Closed grab sample

7.3 Safety and Shutdown Analysis and Provisions

The PCC plant has an ESD system, a PSD system, and an F&G detection system.

7.3.1 Emergency Shutdown System

The ESD system essentially safely actuates the appropriate PSD sequence(s), deenergizes the necessary electrical equipment, and depressurizes the unit (for example, CO_2 compression system). The ESD functions are manually initiated by the operator, usually as a result of fire, major spill, and so on.

The ESD system is safety-programmable logic controller (PLC) based. The system is designed to meet safety integrity level (SIL) 1, 2, or 3 (as determined for each control loop) according to IEC 61508 and IEC 61511.

For situations not requiring immediate action, an audible and visible alarm is given in the CCR as well as locally. Alarms are sent to, handled by, and presented in the DCS alarm system.

For a detailed list of causes of ESD initiation and actions, see the Cause and Effect Diagram, 26301-000-J4-JD-00001 (Appendix C).

7.3.2 Process Shutdown System

The PSD system ensures that process conditions do not exceed specified process safety limits. The PSD system is functionally independent of the process control function but is implemented in the same DCS hardware with dedicated controllers and input/output (I/O) cabinets (see previous description of the DCS structure and function).

In the event of abnormal operating conditions that could cause permanent damage to the plant, endanger human safety, or exceed operating limits to the detriment of plant life, the PSD system automatically shuts down discrete equipment, a system, or the PCC plant in a safe and controlled manner.

For a detailed list of causes of PSD initiation and actions, see the Cause and Effect Diagram, 26301-000-J4-JD-00001 (Appendix C).

7.3.3 Fire and Gas Detection System

The F&G detection system is largely an alarm system, but it can also take actions other than activating remote or local area alarms devices—such as shutting off heating, ventilating, and air-conditioning (HVAC) systems upon combustible/toxic gas detection or starting HVAC systems upon CO_2 detection in case of fire or gas or spill detection. The system layout is shown in Figure 7-2.

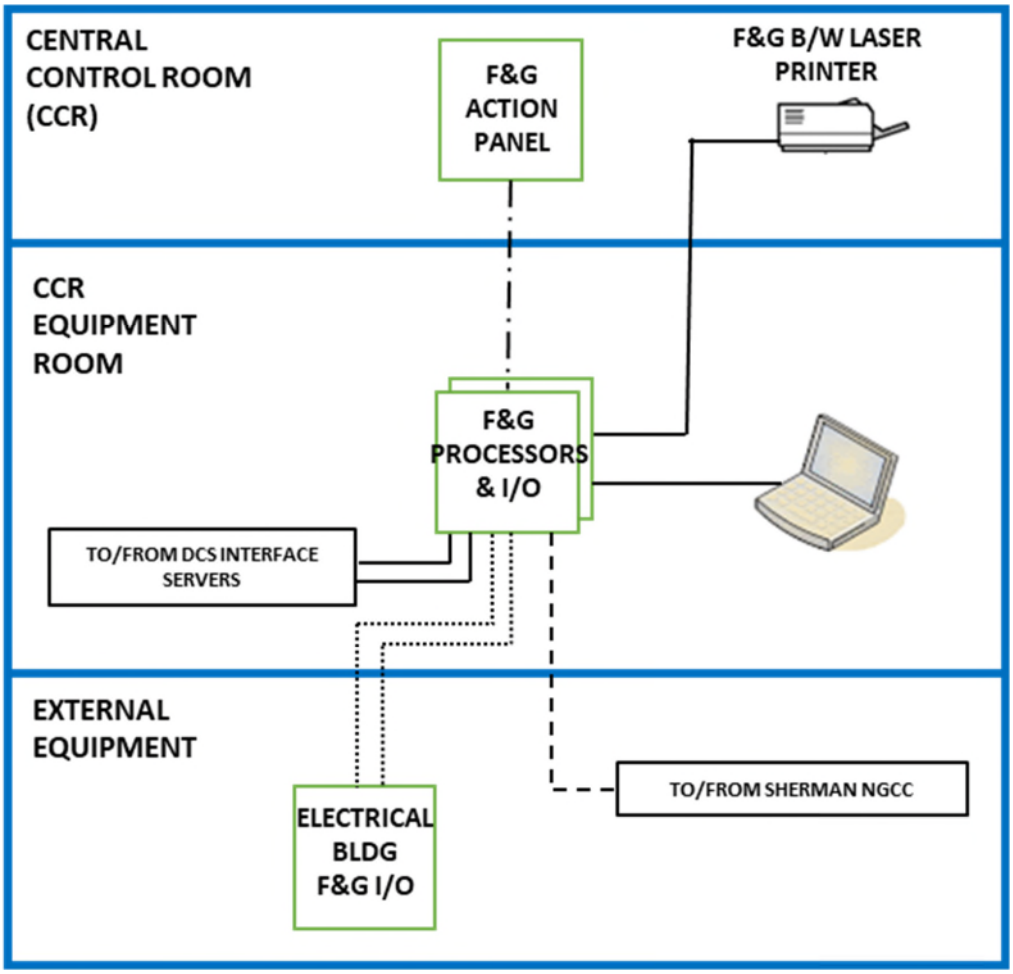

Figure 7-2

Conceptual Block Diagram for F&G Detection System

The F&G detection system is safety-PLC based and is designed to meet SIL 2. The F&G detection system interfaces with the Sherman power plant for exchange of alarms. Details of these interfaces must be decided during the next phase of the project.

For a detailed list of causes of fire and gas detection and actions to be taken, see the Fire and Gas System Cause and Effect Diagram, 26301-000-J4-JD-00002 (Appendix Q).

7.4 Safety and Automation System

The purpose of the PCC plant's DCS-based safety and automation system (SAS) is to safely and efficiently control and monitor plant equipment and processes. The DCS provides integrated modulating control, sequential control, and data acquisition for normal operation and PSD.

The DCS controls, monitors, and records physical and electrical parameters associated with the PCC plant. The system provides interface with the ESD, F&G, continuous gas monitoring system (CGMS), and CCTV systems and with existing installations. The DCS allows full operation from the CCR.

The DCS processors are centrally located in the CCR equipment room for safety and accessibility. Remote I/O is used for interface with field devices. The conceptual block diagram of the DCS is shown in Figure 7-3; further details of the hardware are provided in Section 7.8.

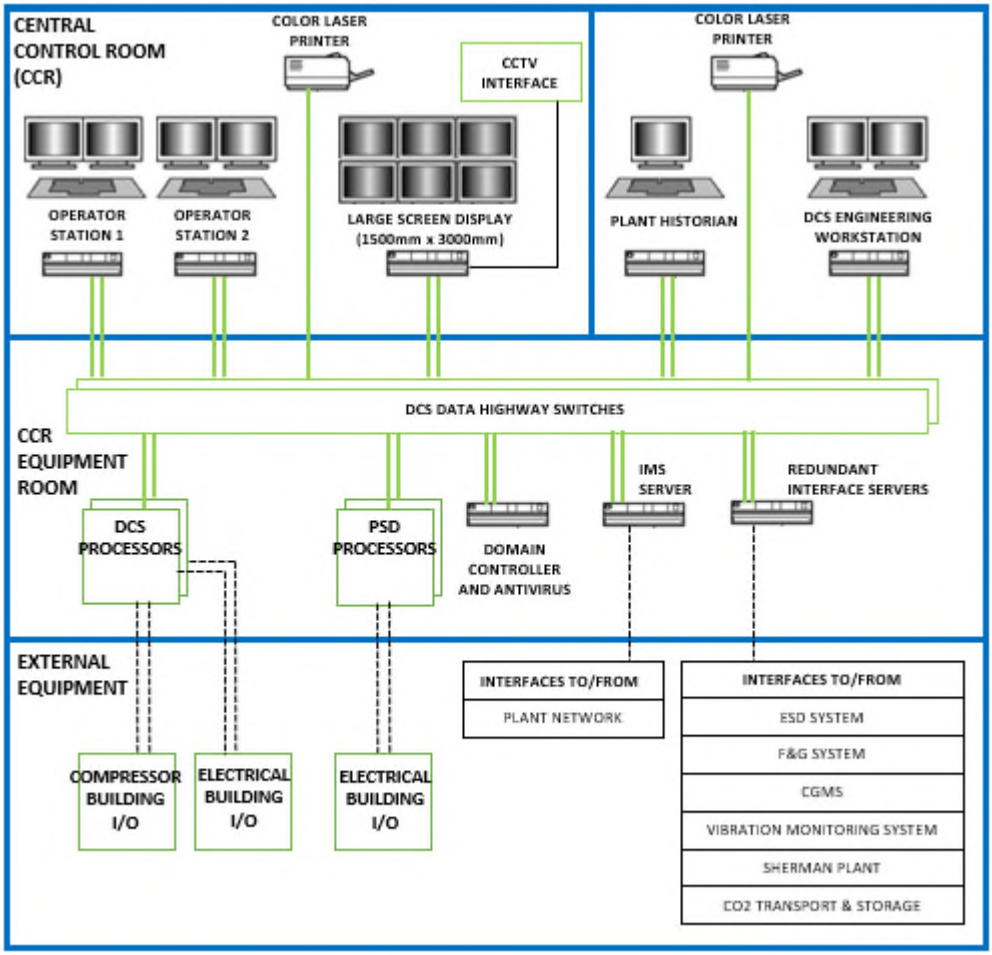

Figure 7-3

Conceptual Block Diagram for DCS and PSD System

7.5 Gas and Emissions Monitoring and Metering

7.5.1 Continuous Gas Monitoring System

The purpose of the PCC plant's CGMS is to sample, measure, and analyze incoming flue gas from the Sherman natural gas–combined cycle (NGCC) power plant, absorber off-gas emissions, and the CO_2 product stream and then calculate, record, report, and archive these emissions for use by plant management in reporting.

The CGMS for each absorber's off-gas is located between the absorbers in the CGMS shelter. The gas monitoring equipment for the CO_2 product is located in cabinets in a separate analyzer room in the compressor building. The CGMS interfaces with the DCS for exchange of control and reporting data. The conceptual block diagram is shown in Figure 7-4.

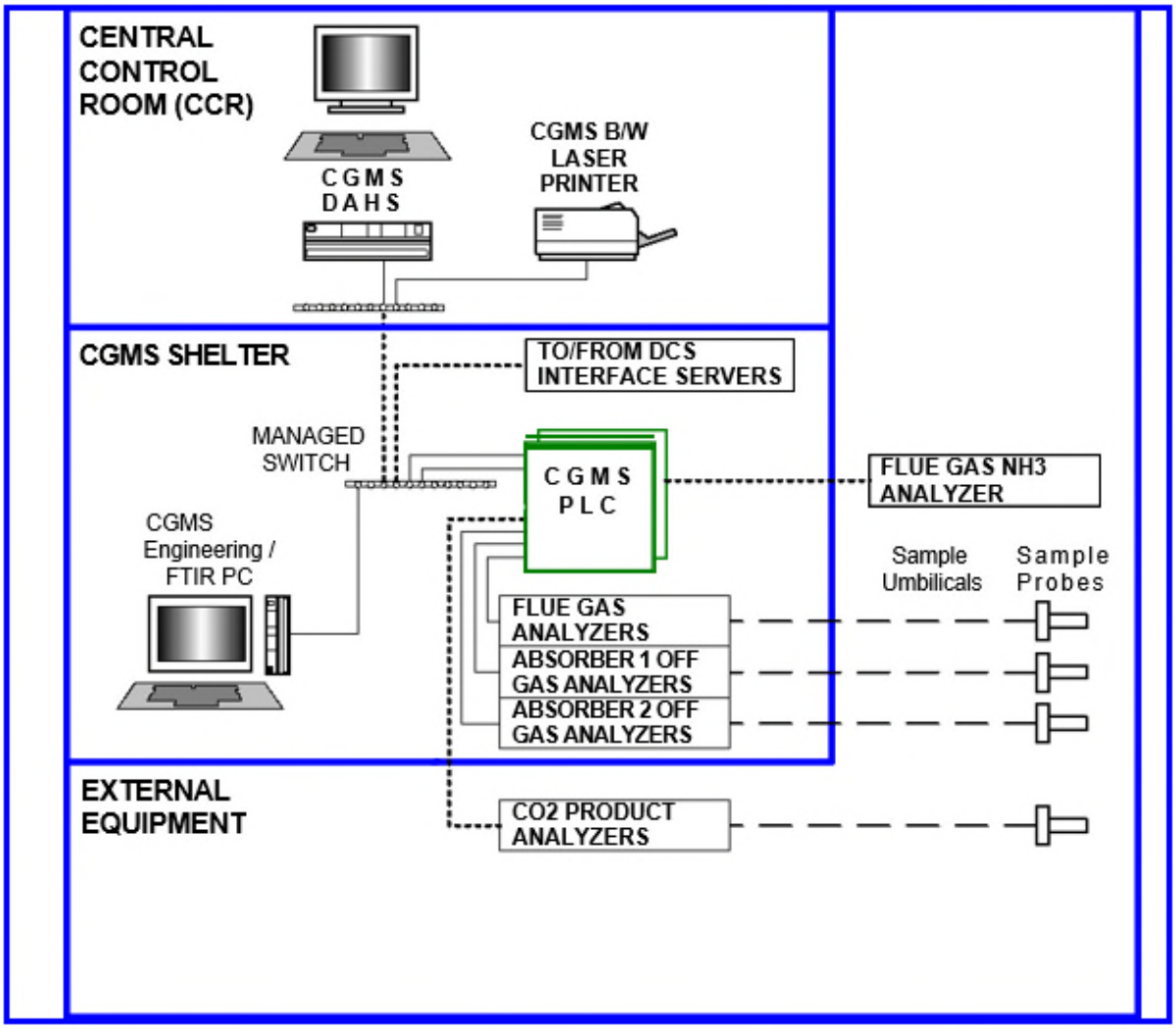

Figure 7-4

Conceptual Block Diagram for CGMS System

Although no air permit specific to the PCC plant has been issued to date, certification will be to the State of Texas.

The CGMS is a direct-extractive sampling system. Separate, dedicated CO_2 analyzers are included for the incoming flue gas and absorber off-gas streams for CO_2 master control. Ammonia in the flue gas from the NGCC is measured *in situ* to avoid potential transport problems associated with the long sample line. Redundant H_2O analyzers are provided on both the CO_2 dryer outlet and the CO_2 product stream, and redundant O_2 analyzers are provided on the CO_2 product stream to ensure that the product meets the required quality. Table 7-2 lists the measured components and analysis method for each monitored process stream within the plant.

Table 7-2

Gas Analysis Parameters and Analyzer Type

Component→ Sample ↓	Amine (MEA)	Carbon Dioxide (CO_2)	Carbon Monoxide (CO)	Ammonia (NH_3)	Nitrogen Oxides (NOx)	Water (H_2O)	Oxygen (O_2)	Analyzer Type
Flue Gas from NGCC	--	X	--	--	X	X	--	FTIR
	--	--	--	X	--	--	--	IR or TDLAS (*in situ*)
	--	--	--	--	--	--	X	ZrO_2 or para-magnetic
	--	X	--	--	--	--	--	NDIR
Off-Gas (each absorber)	X	X	--	X	X	X	--	FTIR
	--	--	--	--	--	--	X	ZrO_2 or para-magnetic
	--	X	--	--	--	--	--	NDIR
CO_2 Product	X	X	--	--	--	X	--	FTIR
	--	--	--	--	--	X	--	IR
	--	--	--	--	--	--	X	ZrO_2 or para-magnetic
	--	--	--	--	--	--	X	ZrO_2 or para-magnetic

7.5.2 Liquid Emissions

Samples from throughout the plant are routed to the sample panel where they are conditioned and distributed to the required analyzers and grab sample points. The samples, measured variables, and analyzers are shown in Table 7-3.

Table 7-3

Online Liquid Analysis

Sample	Measured Variable	Analysis Method
Absorber #1 Wash Water	% MEA	Shared OGC
Absorber #2 Wash Water	% MEA	Shared OGC
Rich Amine	% MEA and % CO_2	Shared OGC

Lean Amine	% MEA and % CO_2	Shared OGC
Semi-Lean Amine	% MEA and % CO_2	Shared OGC
LP Condensate	Cation conductivity	Online analyzer

To minimize MEA and water loss from the system, all the samples are pumped back to the absorber after analysis.

The cooling water discharge is sampled daily for the presence of amine to check for a possible leak in one of the heat exchangers. The exact method of monitoring is to be determined during detailed design once specific limits have been defined. If amine is found, grab samples from each heat exchanger outlet can be analyzed using online gas chromatography (OGC) or other method to determine the exact source of the leak.

The cooling water return line from each heat exchanger and the plant discharge cooling water line are also monitored for temperature and provided with high and high-high alarms.

The amine waste sump can be tested by grab sample for quality. If the quality is acceptable, the waste is recycled to either the lean amine solvent tank or either of the rich amine pump suctions.

The wastewater sump can likewise be tested by grab sample for quality. If the quality is acceptable, the waste can be pumped through the oil/water interceptor to the cooling water discharge.

Reclaimer sludge liquid is drained to a tanker for offsite disposal.

7.6 Startup and Shutdown Considerations

All startups and shutdowns must be coordinated with the Sherman NGCC plant operators. The PCC plant should be started only after approval from the NGCC plant operator has been received.

7.6.1 Startup

7.6.1.1 Startup Sequence

The PCC plant can be started manually or using automatic sequence. If started automatically, the sequence is initiated by the operator, and the sequencer guides the system through unit startup up to admission of flue gas. The general sequence is as follows:

1. Makeup is added to the absorber and stripper bottom levels, water wash chimney tray, and compressor steam generators as needed.
2. The LP steam line warmup process is started through the drain line.
3. Cooling water valves are opened.
4. Once the steam line is warmed up and the minimum required superheat is reached, steam is admitted to the reboiler and the drain valve closed.
5. The reflux and stripper are brought to operating pressure, and reflux flow is established.
6. The lean amine, rich amine, and flash drum pumps are started in recirculation mode.
7. Minimum lean/rich amine flow is established. At this point, CO_2 loading in the rich amine flow is minimal because there is no flue gas flow through the absorbers.
8. The wash water pump is started and wash water flow established.
9. The compressor is started at minimum speed in recirculation mode.
10. The PCC plant flue gas duct isolation dampers are opened.
11. The flue gas blower for the first absorber is started at minimum speed.
12. The output gradually increases from zero, admitting flue gas to the first absorber.
    - At first, the blower damper controls flow until it reaches maximum throttling position, at which point it opens and the blower speed increases to take more flue gas flow.
    - The HRSG stack dampers are gradually closed while maintaining steady pressure in the HRSG/PCC plant duct. HRSG dampers should

remain sufficiently open to pass any flue gas that is not being diverted to the PCC plant.

- Lean amine flow to the absorber is started.
- Steam to the reboiler increases as amine flow increases.
- At first, the stripper reflux drum pressure control valve keeps constant pressure in the stripper. As CO_2 flow increases, the pressure control valve fully opens, and the compressor speed is used to control constant stripper pressure.

13. The output is fixed to a minimum load until the CO_2 product system has been filled and started and the pipeline has been filled and is in service.
    - As CO_2 begins to fill the surge drum, the air vents from the motor-operated valves located on the CO_2 product send-out pump and from the piping upstream of the CO_2 product control valve.
    - Once the system is vented, the motor-operated valves close and a CO_2 product send-out pump starts.
    - Flow to the CO_2 pipeline is strictly controlled until the pressure in the pipeline approaches operating pressure (details to be determined during final design with input from outside the B/L).
14. The output begins to increase again.
15. After the first absorber takes approximately 50% of the normal flue gas flow, the second absorber is started in the same sequence as outlined previously. The HRSG stack dampers close during this step to operational setting, and the portion of the flue gas that is not diverted to the PCC exits out of the HRSG stacks.
16. Once the unit has stabilized, the operation is released for fully automatic steady-state control.
17. Semi-lean amine flow to the absorber is set at the design rate after the system is fully stabilized.

7.6.1.2 First Startup

The first startup of the unit after the system is completely drained requires additional manual steps as follows:

1. Operators must verify manual valve and equipment lineup.
2. The cooling water system piping may not be completely full if it was drained. The system should be filled in a controlled manner to preclude water hammer. This can be done by slightly opening the motor-operated isolation valve or by providing a fill line from the NGCC raw water system.
3. A 35% amine solution may need to be created if insufficient level exists in the lean amine solvent storage tank. The tank is filled with process water and concentrated amine added to make 35% MEA. A grab sample is taken and manually injected into the online gas chromatograph to confirm the proper amine concentration. The lean/semi-lean/rich amine system piping and pumps are filled and vented using the 35% amine and a lean amine solvent fill pump.
4. The wash water system piping and pumps are filled and vented using process water and an absorber makeup water pump.
5. The stripper reflux system piping and pumps are filled and vented using process water and an absorber makeup water pump.
6. The CO_2 product send-out system piping and pumps are filled and vented as determined during final design with input from outside the B/L.

Additional considerations for the automatic sequencing tasks are as follows:

- The 35% amine makeup to the unit is more than normal. The condensate blowdown tank fills to ensure an adequate water supply for the LP steam desuperheater until the system reaches equilibrium. Condensate may be rejected until the initial fill from the process water system is rejected back to the process water surge tank.
- If medium-pressure (MP) steam is required, confirmation is required from the NGCC operator that the auxiliary boiler is ready.

7.6.1.3 Startup After Short Downtime

After a short downtime (hot start where the NGCC is already running), the shutdown sequence outlined in Section 7.7.2 is normally executed, but equipment is already filled, vented, and ready for restart. The startup sequencer checks each step in order and continues to the next step once completed.

7.6.1.4 Startup After Long Downtime

After a long downtime (cold start where the NGCC is already running but the shutdown condition has crossed shift change), the shutdown sequence outlined in Section 7.7.2 is normally executed, but equipment is already filled, vented, and ready for restart. After an outside plant operator verifies the manual valve and equipment lineup, the control room operator initiates the normal startup sequence.

7.6.1.5 Restart Following Trip

After diagnosing and troubleshooting the cause of the trip, the operator can, in many cases, restart the unit using the startup sequencer.

7.6.2 Shutdown

7.6.2.1 Normal Shutdown

The PCC plant can be shut down manually or using automatic sequence. If shut down automatically, the sequence is initiated by the operator, and the sequencer guides the system through unit shutdown. The general sequence is as follows:

1. Automatic control is deactivated and flue gas flow is slowly reduced to zero, at first by reducing blower speed and then by the blower damper. One absorber is shut down at a time. The HRSG stack dampers open to maintain a stable pressure in the HRSGs and PCC plant duct.
2. The Sherman NGCC operator is informed that MP steam to the reclaimer is being shut down (if in operation).
3. LP steam to the reboiler is shut down after the CO_2 in the rich amine has been reduced through 1-hour operation without flue gas to the absorbers.
4. Semi-lean amine flow is stopped.
5. The reflux and stripper are slowly depressurized.
6. The compressor is stopped several minutes after CO_2 production stops.
7. Solvent flow is circulated until the stripper bottom temperature drops below 65°C.
8. Absorber, flash drum, stripper bottom, and reflux drum levels are decreased to minimum level by rejecting amine to the lean amine solvent storage tank (MT-102).
9. The wash water pump is stopped.
10. The reflux pump is stopped.
11. The lean and rich amine pumps are stopped.
12. The PCC plant isolation dampers are closed.
13. The cooling water valves are closed by the operator.

7.6.2.2 Extended Shutdown

If the unit is to be shut down for an extended period (>48 hours), the amine is drained manually from the absorbers to the amine storage tanks and forwarded to the lean amine storage tank to avoid oxygen degradation of the MEA.

7.6.2.3 Emergency Shutdown

Emergency shutdown of the entire plant will occur if the ESD button is pressed or there is loss of power to the ESD system.

When the plant-wide ESD button is activated, the HRSG stack dampers will automatically open and ESD system valves will automatically close and isolate the flue gas and lean amine entering the absorber, rich amine to the stripper, LP steam to the reboiler, MP steam to the reclaimer, and CO_2 within the compressor system. All pumps will be stopped.

The absorber column, lean and rich amine piping, and wash water piping will automatically depressurize to static conditions. The stripper, reflux system, and reclaimer will remain pressurized or at vacuum (depending on the temperature at the time of shutdown), and the CO_2 compressor section will remain pressurized because of ESD valve closure. The pressure will be released through the reflux drum vent valve and CO_2 surge drum vent valve when the emergency depressurization sequence starts. The operator will initiate the emergency depressurization sequence, which will be allowed to shortly after the plant-wide ESD occurs.

ESD valves require a local manual reset before the plant can be restarted. When the initiating condition is cleared and the ESD button is reset, the plant can be restarted.

If the compressor ESD button is pressed, it trips only the compressor and reduces the PCC plant to minimum load. For a detailed list of causes of ESD initiation and actions,

see the Cause and Effect Diagram, 26301-000-J4-JD-00001 (Appendix C).

7.6.2.4 Process Shutdown

Numerous conditions can cause a process shutdown of all or parts of the PCC plant. In the event of plant-wide shutdown, both rich and lean amine will be drained to their respective storage tanks and nitrogen blanket applied.

Some of the key conditions that cause process shutdown (PSD) and the resulting impact are provided in Table 7-4. For a detailed list of causes of PSD initiation and actions, see the Cause and Effect Diagram, 26301-000-J4-JD-00001 (Appendix C).

Table 7-4

Shutdown Conditions

Condition	Shutdown
Instrument air failure	Shut down entire plant
NGCC combustion turbine trip	Shut down and isolate flue gas, and open HRSG stack dampers
HH flue gas temperature; HHH or LLL flue gas pressure	Shut down and isolate flue gas, and open HRSG stack dampers
Loss of cooling water	Shut down entire plant
Compressor trip	Isolate/vent compressor, and reduce plant to minimum load
HH LP steam temperature	Shut down entire plant
HH MP steam temperature	Close MP steam shutoff valve, and shut down reclaiming operation
LLL absorber bottom level	Trip rich amine outflow; trip and isolate associated flue gas blower
HHH absorber bottom level	Trip feeds to absorber; trip and isolate associated flue gas blower
LLL stripper bottom level	Trip outflows from stripper; shut down reboiler and auxiliary boiler
HHH stripper bottom level	Trip feeds to stripper
HHH stripper pressure	Shut down reboiler
HHH compressor suction and knock-out drums level	Trip compressor and product send-out pump; isolate pipeline
HHH CO_2 surge drum level	Trip compressor
CO_2 pipeline/storage trouble	Trip compressor and product send-out pump; isolate pipeline
HH CO_2 product O_2 concentration	Isolate pipeline; vent CO_2
HH CO_2 product H_2O concentration	Isolate pipeline; vent CO_2

7.7 Primary Control System and Equipment

The PCC plant's primary control system is the DCS. The conceptual block diagram is shown in Section 7.5. For the detailed block diagram, see the SAS Architecture Diagram, 26301-000-JD-JD-00001 (Appendix P); (Appendix U).

The major components of the DCS are as follows:

- Operator stations (two)
- Large-screen visual display unit (VDU)
- EWS
- Plant historian

- IMS server
- Domain controller and anti-virus server
- Interface server
- Controller cabinets
- Remote I/Os and remote I/O cabinets
- I/O cards
- Data highway
- GPS-based clock system
- Color printers

The DCS provides direct detailed control of the PCC plant. This is accomplished by 1) direct manual control of system prime movers such as pumps and blowers, 2) direct manual control of system final control elements such as control valves and on/off valves, 3) direct monitoring of system instrumentation such as pressure transmitters, flow measurements, and temperature elements, 4) system alarm annunciation, 5) protective interlock logic, and 6) automatic control of most final control elements and system prime movers.

Manual control is provided for most final control elements to allow the operator to take direct control of an upset condition. Manual control is also useful for troubleshooting, startup, and shutdown. Interlock logic prevents the operator from creating an undesirable operating condition that could endanger personnel safety or cause equipment damage.

Automatic logic is used to execute routine corrective action on the system prime movers and final control elements, freeing the operator to focus on the overall plant condition.

The DCS and PSD systems are located on a common network. These systems are connected to the ESD and F&G systems through the interface servers. The ESD and F&G interface capabilities are outlined in the following sections.

Redundant components include the data highway, controllers, power feeds, and power supplies.

7.8 Central Control Room Layout

Central operation of the PCC plant is provided from the CCR located in the control/workshop/stores building. The conceptual layout for the CCR is shown in Figure 7-5.

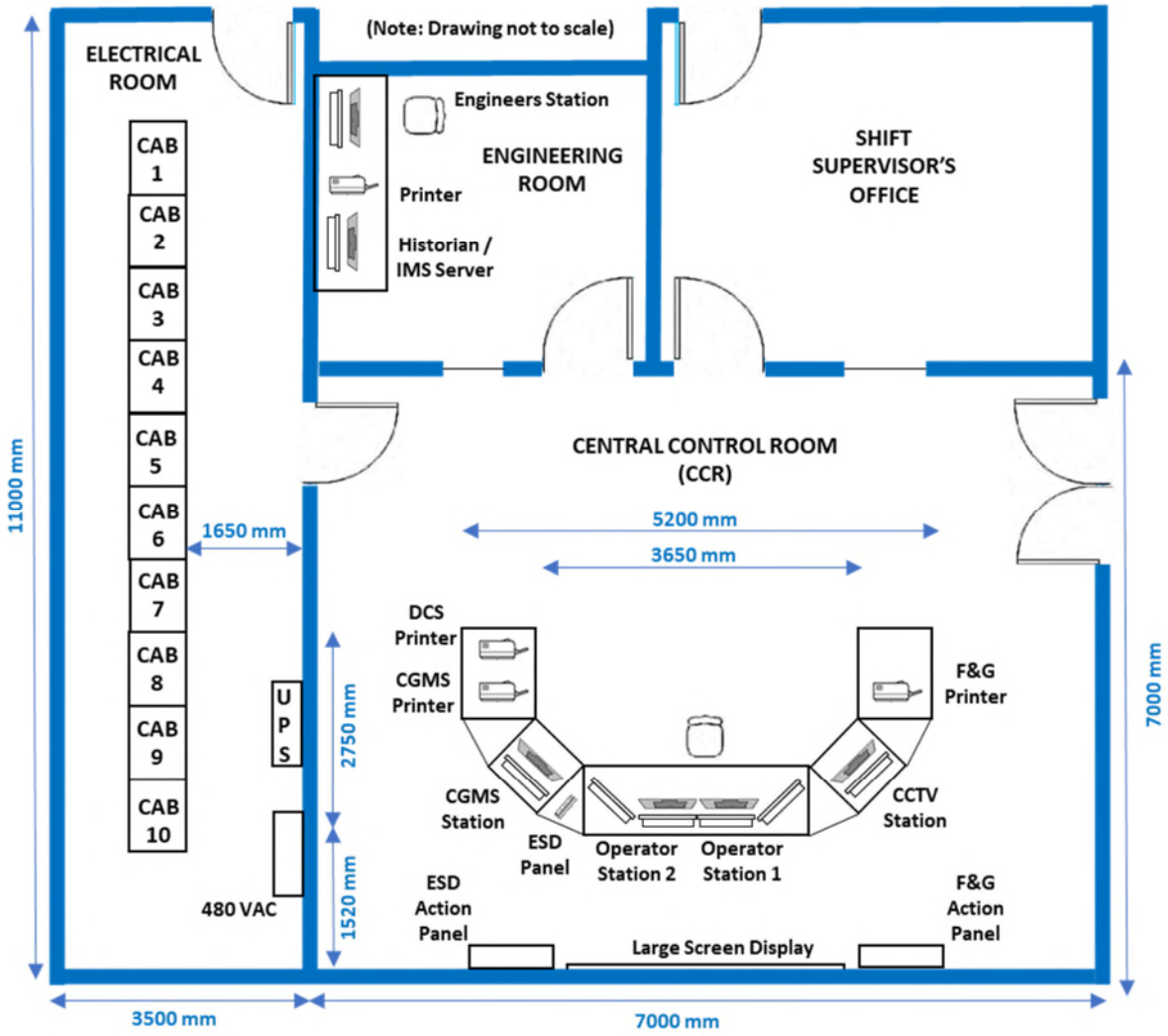

Figure 7-5

Conceptual Control Room Layout (not to scale)

The CCR has a U-shaped console where the operator sits facing two operator stations on the console and a large-screen VDU and emergency system action panels against the back wall. The operator has access to all other required central control functions on the sides of the console.

Rooms with functions associated with central operations and the DCS are arranged around the perimeter of the CCR. The engineering room contains the DCS and equipment associated with administering the system. The electrical room has processors and servers for the DCS, PSD, ESD, and F&G detection systems along with the support equipment such as network switches and the plant GPS time server. The shift supervisor's office can also be accessed through the CCR.

7.9 Local Equipment/Instrument Room Layouts

Analysis equipment is located in two local equipment/instrument rooms on the site. The CGMS shelter is centrally located between the two absorbers, and the compressor building analyzer room is located on the south side of the compressor building.

DCS, PSD, and F&G detection system equipment is located in the electrical building as indicated in Section 7.8.1.

7.9.1 CGMS Shelter

The CGMS shelter is a prefabricated building that houses the gas analysis equipment for the flue gas, Absorber 1 off-gas, and Absorber 2 off-gas samples. The shelter includes analyzers as outlined in Section 7.6.1. A separate room is located at the south end of the shelter for calibration gas bottle storage.

7.9.2 Compressor Building Analyzer Room

The compressor building analyzer room contains equipment for sampling and analysis of the CO_2 product stream as outlined in Section 7.6.1. The analyzer room also contains DCS remote I/O cabinets. A separate room is located at the east end of the analyzer room for calibration gas bottle storage. These rooms are shown in CO_2 Compressor Building Conceptual Plan Drawing 26301-000-A1-6310-00001 (Appendix S).

7.10 Packaged Equipment Controls Interface

The DCS interfaces with packaged systems in the PCC plant through redundant interface servers and managed Ethernet switches. This interface allows the operator in the CCR to monitor and/or control these systems. The DCS interfaces with the PLCs of the ESD, F&G detection, CGMS systems and with the Bentley Nevada vibration monitoring system (VMS) processors.

7.11 Field Instruments and Devices

Foundation Fieldbus digital bus instruments are used where practicable. HART smart, loop-powered, 4-20 mA dc instruments are used where Fieldbus cannot be used due to speed of response, safety requirements, and so on. The signal transfer to the medium-voltage switchgear and low-voltage motor control centers is also communicated by digital bus.

Field instrumentation that remains powered after gas is detected is intrinsically safe, certified for explosion group IIA, temperature class T2. The foundation Fieldbus instrumentation operates using FISCO (Fieldbus Intrinsically Safe Concept).

A Bentley-Nevada VMS is provided on the flue gas blowers and CO_2 compressors. X/Y radial vibration is monitored on the gearbox and motor bearing, thrust bearing position is monitored on each thrust bearing, and a key phasor is installed for each different shaft speed.

7.12 External Controls Systems Interfaces

The DCS interfaces with Sherman NGCC controls systems through the redundant interface servers and managed Ethernet switches. CO_2 transport and storage system interfaces will have to be added during detailed design phase once more information is available. Signals will be exchanged for communication of critical alarms and/or process parameters that may affect the other facilities. The detailed Signal Exchange List, 26301-000-J0-JD-00002 (Appendix AB), provides the signals that are exchanged.

7.13 Major Upset Conditions

7.13.1 Flue Gas

7.14.1.1 Combustion Turbine Trip

If the combustion turbines trip, the flue gas to the PCC plant will be shut down. The HRSG stack dampers will open fully, PCC shutoff dampers will close, blower inlet control dampers will close, and blowers will shut down. Because steam will no longer be available for the reboiler, the recommendations in Section 7.14.5 are also applicable.

7.13.1.2 High Flue Gas Temperature

On HHH flue gas temperature at the absorber inlet, the flue gas to the PCC plant will be shut down. The HRSG stack dampers will open fully, PCC shutoff dampers will close, blower inlet control dampers will close, and blowers will shut down. Because there will still be steam available, the remainder of the PCC plant can remain in operation until the condition clears.

The same actions will be initiated on HHH or LLL flue gas pressure.

7.13.1.3 Flue Gas Blower Trip

If a flue gas blower trips, the pressure in the HRSG and ductwork will begin to rise. To avoid a combustion turbine trip on high backpressure, the following automatic actions will occur.

If the other blower is in service:

1. The stack damper's fast open function will be activated.

2. The suction damper of the tripped blower will begin to close to avoid backflow through the absorber.
3. The other blower will increase speed if not already at maximum speed.
4. When the system has settled following the trip, the HRSG stack dampers can be released for modulation to restore the flow through the remaining absorber to normal.

If the other blower is not in service,

1. The stack damper's fast open function will be activated.
2. The suction damper of the tripped blower will open fully or remain open to allow flow to escape through the absorber and minimize pressure increase in the system.
3. After a brief period to allow the system to settle, the PCC shutoff dampers will close so that all the flue gas vents through the HRSG stacks until the PCC is restarted.

7.13.2 High/Low Level Solvent

7.13.2.1 Absorber

The following occurs for an absorber level increase:

- At H level, an alarm is annunciated.
- At HH level, an alarm is annunciated, and the solvent return valve is opened to remove excess solvent from the absorber.
- At HHH level, an alarm is annunciated and the feeds to absorbers are tripped to prevent uncontrolled overfilling and eventual interference and carryover due to solvent level at the flue gas inlet. HHH level also trips and isolates the associated flue gas blower.

The following occurs for an absorber level decrease:

- At L level, an alarm is annunciated.
- At LL level, an alarm is annunciated and the solvent makeup valve is opened to add solvent to the system.
- At LLL level, an alarm is annunciated and the associated rich amine outflow is tripped. LLL level also trips and isolates the associated flue gas blower.

7.13.2.2 Stripper

The following occurs for a stripper level increase:

- At H level, an alarm is annunciated.
- At HH level, an alarm is annunciated. The rich amine flow control valve position and rich amine pump speed will be automatically decreased, even if control is in manual.
- At HHH level, an alarm is annunciated and all feeds to the stripper are tripped to prevent uncontrolled overfilling of the column with eventual amine solution carryover into the reflux system.

The following occurs for a stripper level decrease:

- At L level, an alarm is annunciated.
- At LL level, an alarm is annunciated and the steam flow to the reboiler is decreased.
- At LLL level, an alarm is annunciated and the lean amine pumps and all outflows from the stripper are tripped to protect the lean amine pump. LLL level also shuts down reboiler.

7.13.2.3 Reflux Drum

The following occurs for a reflux drum level increase:

- At H level, an alarm is annunciated.
- At HH level, an alarm is annunciated. Reflux purge will be automatically increased.

The following occurs for a reflux drum level decrease:

- At L level, an alarm is annunciated.
- At LL level, an alarm is annunciated and the reflux purge is automatically stopped. Between LL and LLL level, the steam flow to the reboiler will be increased.
- At LLL level, an alarm is annunciated and the reflux pump is tripped.

7.13.2.4 Flash Drum

- At HH level, an alarm is annunciated and the rich amine flow to the flash drum will be shut down.
- At H level, an alarm is annunciated.
- At L level, an alarm is annunciated.
- At LL level, an alarm is annunciated and the flash pump is tripped.

7.13.2.5 Compressor

- At H and HH compressor suction drum level, an alarm is annunciated.
- At HHH compressor suction drum level, an alarm is annunciated, the compressor and CO_2 send-out pumps are tripped, and the pipeline is isolated.
- At H and HH compressor first-stage knock-out drum level, an alarm is annunciated.
- At HHH compressor first-stage knock-out drum level, an alarm is annunciated, the compressor and product send-out pumps are tripped, and the pipeline is isolated.
- At H and HH compressor second-stage knock-out drum level, an alarm is annunciated.
- At HHH compressor second-stage knock-out drum level, an alarm is annunciated, the compressor and CO_2 send-out pumps are tripped, and the pipeline is isolated.
- At H and HH CO_2 surge drum level, an alarm is annunciated.
- At HHH CO_2 surge drum level, an alarm is annunciated and the compressor is tripped.

7.13.3 High/Low Pressure

7.13.3.1 Stripper

The following actions occur for stripper pressure:

- At L pressure, an alarm is annunciated.
- At H pressure, an alarm is annunciated.
- At HH pressure, an alarm is annunciated. The LP steam flow control valve position will be automatically decreased.
- At HHH pressure, an alarm is annunciated and reboiler and MP steam flow are shut down.

Following an emergency shutdown, a vacuum condition may develop because of temperature drop of trapped vapors. A low-pressure alarm will be annunciated in the DCS, but the stripper is rated for full vacuum conditions—so no automatic actions are taken.

7.13.4 Pump Trips

7.13.4.1 Flue Gas Fogger Water Injection Pump Trip

If the water injection pump trips, the standby pump will be started. If both pumps are tripped, the temperature in the flue gas entering the absorber will immediately rise. The actions described in Section 7.14.1.2 will occur.

7.13.4.2 Lean Amine Pump Trip

If one of the lean amine pumps trips, the standby pump will be started. If both pumps trip, the CO_2 levels in the off-gas will rise to approach that of the flue gas. It will be determined during detailed design of the absorber whether any amine carryover might occur in this situation that may require the flue gas to the absorbers to be shut down. The rich amine pump flow will reduce and then stop as the level in the absorber decreases. With no flow in or out of the stripper, steam flow to the reboiler will decrease to the minimum level required to maintain temperature. The plant can be restarted after the lean amine pump is returned to service. If a pump cannot be restarted within a reasonable time frame, it is suggested that the PCC plant be shut down.

7.13.4.3 Rich Amine Pump Trip

If the rich amine pump trips, the standby pump will be started. If both pumps are tripped, the level in the corresponding absorber and temperature in the stripper will begin to rise, eventually causing a process shutdown.

7.13.4.4 Water Wash Pump Trip

If the water wash pump trips, the standby pump will be started. If both pumps are tripped, amine will begin to carry over into the off-gas and the system will begin to lose water to the off-gas. To avoid this, the flue gas to the affected absorber will be shut down and HRSG stack dampers sufficiently opened so there is no increase in backpressure on the combustion turbine.

The bleed valve from water wash to lean amine will also close on a water wash pump trip to avoid any backflow from the lean amine system into the water wash.

7.13.4.5 Reflux Pump Trip

If the reflux pump trips, the standby pump will be started. If both pumps are tripped, level in the reflux drum will begin to rise and there will be a high level alarm.

The recycle valves from the reflux system to the lean amine and water wash systems will also close on a reflux pump trip to avoid any backflow into the reflux system.

7.13.4.6 Flash Drum Pump

If the flash drum pump trips, the standby pump will be started. If both pumps are tripped, level in the flash drum will begin to rise. When the level reaches HH, the flow to the flash drum will be shut down. No further automatic actions will be taken because the unit can continue operating but at lower overall performance.

7.13.5 Loss of Reboiler Steam

If LP steam to the reboiler is lost, CO_2 levels in the lean amine will increase, causing increased corrosiveness of the lean amine and decreased CO_2 capture from the flue gas. The operator will shut down the plant if steam cannot be restored immediately.

7.13.6 Compressor Trip

If the compressor trips, it will be isolated and vented. The CO_2 being generated by the system will be vented from the top of the reflux drum through the vent control valve. The PCC unit will be run back to minimum load, where the operator can determine whether to wait until the compressor is returned to service or shut down the PCC plant.

7.14.7 Electrical

If the 13.8 kV or 4.16 kV power supply is interrupted, the ESD system will activate because all the main motors will trip. The HRSG stack dampers will open automatically, so there is no increase in backpressure on the combustion turbines. Power can be manually transferred to the dead time power supply, and equipment can be returned to operation if necessary.

In the event of undervoltage on one of the 480 V load centers, the feeder breaker will be tripped and the tie breaker closed to provide power from the other load center.

On loss of power to the plant, the emergency diesel generator will automatically start and supply power to equipment on the essential MCC.

In the event of undervoltage on one of the 480 V MCCs, the feeder breaker will be tripped and the tie breaker closed to provide power from the other MCC.

Chapter 8: Civil, Structural, and Architectural Design

8.1 Design Criteria and Features

8.1.1 Site Work

The PCC site is adjacent to the NGCC plant as shown in the plot plan, 26301-000-P1-0010-00001 (Appendix E). The site is relatively flat, and the amount of earthwork required for the rough grading of the site is minimal as shown in Drawing 26301-000-CG-0000-00001 (Appendix R).

Stormwater runoff determination will be based on design storm having a 10-year recurrence interval, 24-hour duration. Surface runoff will be controlled using ditches and/or catch basins and underground conduits. The drainage for uncontaminated runoff from the plant area, including roof drainage from the buildings and enclosures, will be diverted to natural watercourses through closed conduits and/or open ditches. The site drainage plan is shown in Drawing 26301-000-CD-0000-00001 (Appendix R). The site is above the 100-year flood boundary and has no wetlands.

The soil properties for the PCC site were considered the same as those for the NGCC plant due to proximity of the two sites. See Appendix T for the preliminary soil analysis. A geotechnical investigation was done for the NGCC plant prior to its construction, but it is recommended that an investigation be conducted specifically for the PCC site prior to the engineering, procurement, and construction (EPC) phase to confirm the site's soil properties. There are no known underground utilities in the PCC area, but this should also be confirmed during the EPC phase.

Prior to start of construction, a permit will be required from the Texas Commission on Environmental Quality (TCEQ) for stormwater discharges during construction. The U.S. Environmental Protection Agency (USEPA) has delegated the implementation of the National Pollutant Discharge Elimination System (NPDES) program to TCEQ. The requirements for erosion and sediment control for the PCC site are expected to be similar to the program adopted for the NGCC. Soil erosion and sediment controls will generally consist of control of runoff, vegetation stabilization, and sediment traps. All slopes, drainage ditches, and other exposed areas will be stabilized by vegetation. Sediment traps such as hay bales or synthetic filter fabric (silt fence) will be installed around catch basin inlets, culvert inlets, and at the top and toe of slopes.

Grading and pavement designs comply with the applicable codes and standards as well as national highway regulations.

The groundwater at this site is expected to fluctuate seasonally based on precipitation according to the observations made during NGCC geotechnical investigation. Where excavation is carried out below the groundwater surface, a dewatering system will be required to maintain groundwater elevation below the working surface of the excavation so that backfilling and material compaction are not affected by groundwater.

8.1.2 Foundations

For the ductwork foundation plan, refer to Drawings 26301-000-DB-0100-00001, 26301-000-DB-0100-00002, and 26301-000-DB-0200-00001. For the PCC site foundation and typical sections and details, see Drawings 26301-000-DB-0200-00002, 26301-000-DB-0200-00003, and 26301-000-DB-0200-00004. These are all included in Appendix R.

The geotechnical report for the NGCC plant indicated that soils consist of clay, CL (lean) to CH (fat), overlying shallow bedrock. The fat clay layer is thin near the ground surface; evaluation for NGCC foundations had concluded that shallow mat foundations are acceptable without the risk of heave and settlement. PCC plant foundations use the same basis as the NGCC; it was concluded that piles or piers are not required. After the geotechnical investigation of the PCC site, reevaluation

should be done to see if any soil must be replaced with structural backfill in any of the shallow foundations' areas to reduce the swell potential.

The allowable bearing pressure for shallow foundations is 190 kN/m^2 (4000 psf); for foundations on rock, it is 380 kN/m^2. A detailed specific site investigation is required for the design phase to refine design pressures.

Reactions at the base of the superstructure are transferred directly to the supporting foundations. To withstand horizontal loads on the superstructure due to an accident (thermal, impact), connections at the base of the superstructure are fixed. The foundations are designed to resist the moment that develops at the base of the superstructure.

Dimensions and weights of some of the major equipment are provided in Table 8-1. These are representative only and will change based on the suppliers selected during the EPC phase.

Table 8-1

Major Equipment Dimensions and Weights

Equipment	Tag No.	Equipment Size		Weight (kg)	Remarks
		Length/Height (mm)	Width/ Diameter (mm)		
CO_2 absorber	T-101/T-102	44,310	11,810	208,655	Length for straight section
Stripper	T-103	43,580	6,670	208,655	Length for straight section
Flue gas blower	MA-101/ MA-102	5,100	5,726	44,530	Fan only
CO_2 compressor skid	MC-103A/C	12,800	4,000	117,510	Total for all three stages
CO_2 gas drying package	MS-104	10,058	3,505	139,250	
Concentrated amine storage tank	MT-101	16,800	12,000	3,800	
Lean amine storage tank	MT-102	16,800	12,000	3,800	
Process water surge Tank	MT-104	9,144	4,724	4,000	
Transformers: step-down/reserve 15 MVA	IESETP03	4,850	3,650	20,000	
Transformer: step-down/reserve 3 MVA	1ESETP02	3,650	3,100	7,000	
Stripper reflux drum	MV-202	5,500	3,700	2,500	
CO_2 compressor suction drum	MV-203	6,000	4,000	3,000	

Flue gas guillotine damper	-	7,000 x 7,000	1,500	20,000	Each damper
Flue gas guillotine damper	-	7,000 x 3,500	1,500	15,000	Each damper

8.1.3 Structural Steel

For structural steel typical sections and details, refer to Drawings 26301-000-S0-0000-00001, 26301-000-S0-0000-00002, 26301-000-S0-0010-00003, and 26301-000-S0-0010-00004 in Appendix R.

Steel is used for the design and construction of structural members, connections, and "outfitting" structures or miscellaneous members. Design of structural and miscellaneous steel is in accordance with the American Institute of Steel Construction (AISC) Specification for Structural Steel Buildings. Materials for structural steel and miscellaneous steel conforms to the requirements of the American Society for Testing and Materials Standard Specification for Structural Steel, ASTM A36, A572 Grade 50, A913 Grade 65, A992. Structural steel and miscellaneous steel for exterior use are galvanized.

Structural steel grating is welded and galvanized and shall conform to Federal Specification RR-G-661, type I. Bearing bars will be 1-1/4 in. x 3/16 in. minimum at 1-3/16 in. on-center (O.C.) with crossbars at 4 in. O.C. minimum.

8.1.4 Architectural

For a conceptual architectural plan of the buildings, refer to Drawings 26301-000-A1-03110-00001, 26301-000-A1-04810-00001, 26301-000-A1-06110-00001, and 26301-000-A1-06310-00001 in Appendix S.

The plant consists mainly of equipment buildings and the control/ workshop/laboratory building. Building materials used for the PCC facility will be compatible with and complement the existing Sherman NGCC buildings. Wall panels will be able to withstand the specified wind loading with practical/economical support girt spacing. The exterior face of wall panels will be finished with the manufacturer's standard prime coat and a urethane or polyurethane finish coat. Roofing will be designed to withstand specified wind loading including appropriate uplift. Roofing will be sloped metal.

The design approach for the control/workshop/laboratory building considers flexibility of workspace and plant views from the building. This building will accommodate staff for full plant operations, and the control room will continue its function even during emergency evacuation. Safety and construction requirements including handicap access to the control/workshop/laboratory building will be in accordance with the requirements of applicable Texas and local codes.

The equipment buildings are designed to enclose the equipment. These buildings are steel framed and enclosed with insulated metal panels and insulated metal roof, which is traditional material for an industrial building. The flooring for equipment buildings is sealed concrete with hardener.

8.1.5 Underground Utilities

Underground piping will have a compacted granular bed underneath. Electrical and instrument cables are placed in concrete culverts. In off-site areas, direct-buried cable trenches may be considered. Culvert walls and top covers are designed to sustain the pressure from backfilling and imposed loads, if any. The culverts are completely filled with sand. Bottom slabs have adequate drainage holes to facilitate surface- and groundwater movement.

8.2 Structural Materials Selections

8.2.1 Concrete

Design of structural concrete will be in accordance with the American Concrete Institute (ACI) Building Code Requirements for Reinforced Concrete, ACI 318. Minimum concrete strength classes for the various structures will be as follows:

Item	Minimum Ultimate Compressive Strength, f_c' (psi) (at 28 days)
Subgrade leveling slab	2,000
All other construction	2,000
Major equipment/structures	4,000 minimum where required

Reinforcing bars will conform to ASTM A615, Grade 60. Welded wire fabric will conform to ASTM A185.

Cement will be portland cement conforming to ASTM C150, Type (as required by soil conditions after geotechnical investigation). Aggregates for normal weight concrete shall conform to ASTM C33. Admixtures will be free of chlorides.

8.2.2 Anchor Bolts and Embedment

High-strength bolts, nuts, and washers will conform to ASTM A325 or A490 or international equivalent. Unfinished bolts, including nuts, shall conform to ASTM A307 or international equivalent. Bolt heads and nuts shall be hexagonal.

Anchor bolts will conform to ASTM F 1554 Grade 36 or Grade 105 or equivalent DIN standard as appropriate. Anchor bolt sleeves will conform to ASTM A501.

Expansion bolts will be either unfinished in expansion shell anchors or wedge bolt anchors. Expansion shell anchors will conform to Federal Specification FF-S-325, Group III, Type 1 or Group VIII, Type 1. Wedge bolt anchors will conform to Federal Specification FF-S-325, Group II, Type 4, and Class 1. As an alternative, drilled holes with anchors set in epoxy may be used if in accordance with equipment manufacturer requirements.

Anchor bolts will be used for all structural and building columns, all major equipment, and all vibrating equipment.

Expansion bolts may be used for stairs, ladders, handrails, platform posts, and minor equipment. Expansion bolts should not be used where the required bolt diameter is larger than 3/4 in.

8.2.3 Structural and Miscellaneous Steel

Materials for structural steel and miscellaneous steel will conform to the requirements of ASTM Standard Specification for Structural Steel, ASTM A36, A572 Grade 50, A913 Grade 65, A992. Structural and miscellaneous steel for exterior use will generally be galvanized.

Structural steel checkered plate will be two-way diagonal raised pattern floor plate conforming to Federal Specification QQ-F-461, Flat Back, Class 1. Checkered plate for exterior use will be galvanized.

Steel pipe for handrail will conform to ASTM A53, Type E or S, Grade B or international equivalent. Handrails for exterior use will be galvanized.

8.3 Design Modifications for Tie-Up with NGCC

8.3.1 HRSG Stack Modifications

The Sherman NGCC HRSG stacks that exhaust the combustion turbine flue gas to atmosphere must be modified to accept the new connection for diverting the flue gas to the PCC absorbers.

A new exterior three-dimensional structural steel support structure will be constructed around each stack. This structure provides strength and stability to the HRSG stack and supports the new ductwork plenums attached to the modified HRSG stack. Moment-resisting trusses transfer gravity loads and overturning moments from the HRSG stack to the frame's columns. Along with these trusses, a single braced bay is constructed on the eastern side of the frame to transfer all lateral and longitudinal horizontal loads (from wind, temperature, and so on) into the existing foundation as well as additional footings for columns bearing outside the HRSG stack foundation mat.

The HRSG stack is fitted with support shoes at the mid-point level. These shoes are fitted to seats on the support structure to transfer the weight of the upper portion of the stack to the new support structure and relieve the weight from the lower half of the stack. No modification of or connection to the existing HRSG steel stair tower is required.

Each HRSG stack is modified by cutting an 80-hole pattern in the south face of the stack (see Figure 8-1). This modification is achieved during plant shutdown. The new stack breeching is placed as a single piece and

connected to the HRSG stack and new flue gas duct using the required expansion joints.

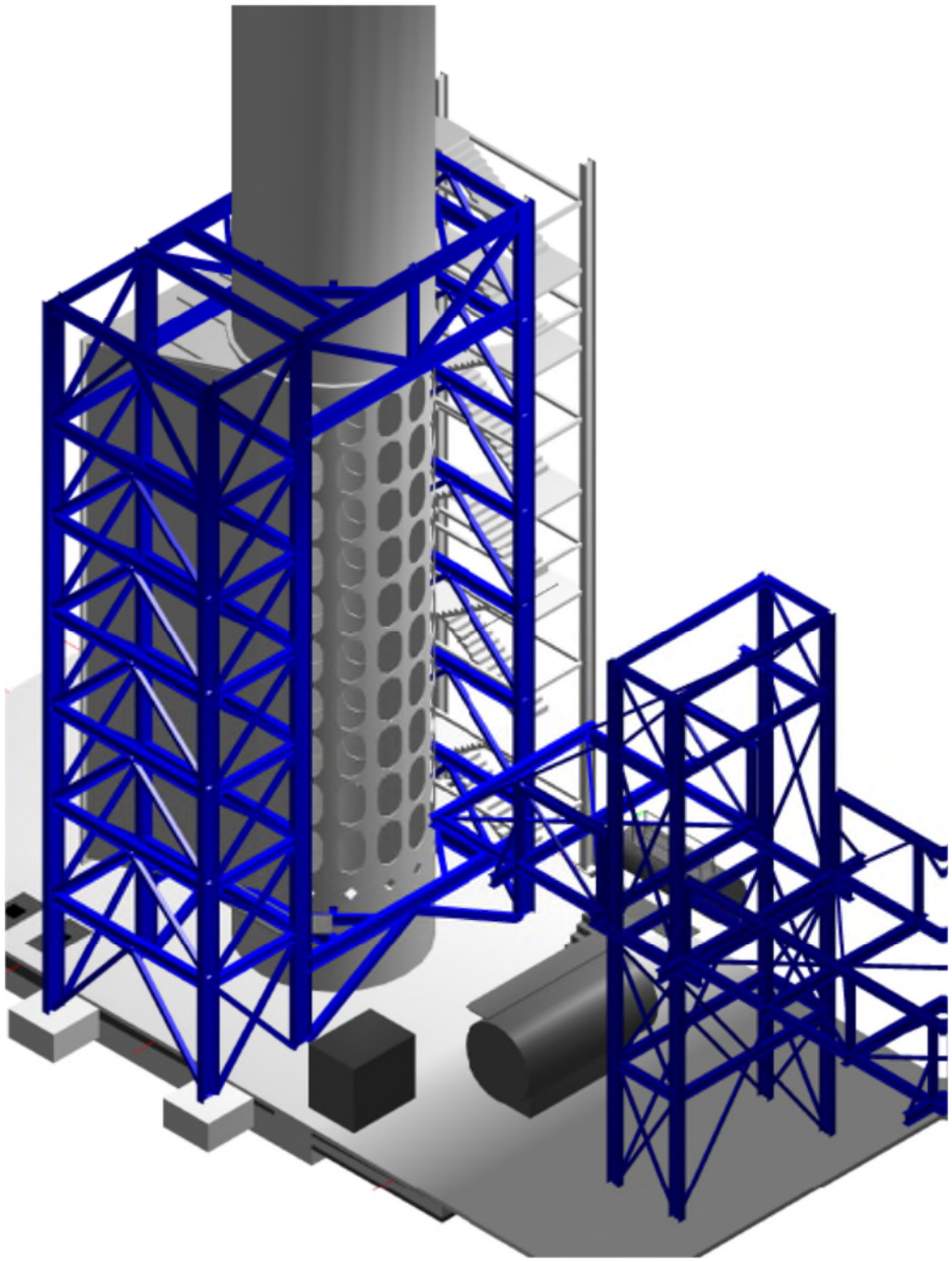

Figure 8-1

HRSG Stack: New Steel Support Structure and Stack Hole Pattern

The existing HRSG stack dampers are reused but modified with the addition of a pneumatic controller outfitted with a local air reservoir to permit the damper to be modulated rapidly.

A portion of the flue gas duct and isolation dampers associated with each HRSG stack must be installed during the tie-in to allow operation of one combustion turbine at a time and to allow the power plant to continue operation even when the ducting to the PCC plant is under construction.

Prior to making the stack modifications, other stack modification options should be studied with Siemens and the HRSG/stack's original equipment manufacturer (OEM) to see if lowering cost and possibly outage duration is possible. These options are most appropriately pursued during the project's EPC phase when opportunities to coordinate outages and modifications acceptable to Sherman can be openly discussed.

8.3.2 Flue Gas Ductwork

The flue gas duct to the PCC plant is approximately 6 m x 6 m and made of carbon steel up to the fogging system grid, at which point it changes to stainless steel all the way to the absorbers.

The flue gas ductwork is supported by a steel structure designed to support the flue gas ductwork extending from the modified HRSG stacks to the blowers/flue gas absorbers as illustrated in Figure 8-2. The steel structure also supports isolation dampers, the fogger injection system, small piping and instrumentation for the flue gas system, and electrical cable tray for multiple project purposes. Access is provided to the dampers and fogger system by ladders, platforms, and walkways. Duct supports consist of long-span prefabricated bridges and support towers that allow the duct to span roads while maintaining clearances.

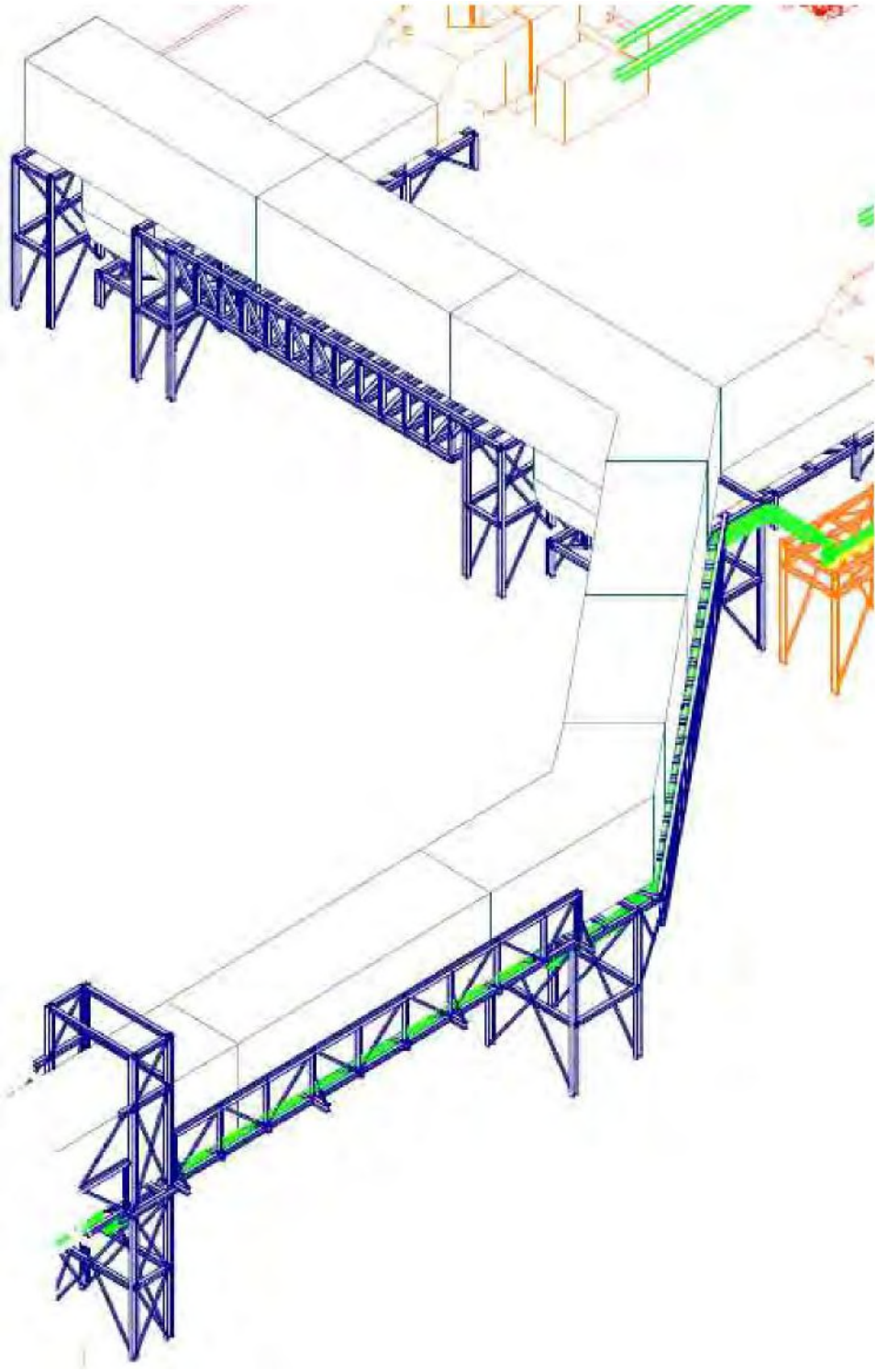

Figure 8-2

Ductwork Layout with Support Steel Structure

For the structural steel design, an analytical model is to be constructed using "beam" elements to represent beams/truss chords and columns and "truss" elements to represent vertical and horizontal bracing (members with axial load only).

Manufactured expansion joints are installed periodically to thermally isolate modular duct sections, and ducts are supported in a way that allows thermal movements without over-constrained loads.

8.3.3 Pipe Rack

The PCC plant's pipe rack is an unmanned steel structure designed to support multiple piping along with electrical cable trays extending from the battery limit and servicing the test facility. Pipe racks are designed and procured in modularized sections. These modular units are delivered with piping, valves, supports, and cable trays installed on the rack. Access is provided to piping and instrumentation.

8.3.4 Circulating Water/Cooling Tower Modification

Cooling water to the PCC plant is provided from the circulating water system. The FEED study has included adequate capital cost margin for this tie-in, but the final decision for the exact tie-in scheme will be taken during the pilot plant phase after site walk-down and discussion with the owner. A tie-in into the existing 78 in. prestressed concrete cylinder pipe (PCCP) circulating water system might prove difficult, and modification of existing forebay for installing new pumps will be evaluated. Replacing the existing auxiliary cooling water pumps to support NGCC and PCC is also an option and would not require any modification to the forebay.

8.4 Buildings and Enclosures

The PCC plant is laid out to accommodate the spaces required for equipment access and to maintain and operate the plant. Access aisles and clearances are provided to accommodate operations and maintenance and equipment removal. The plant includes paved roads to access the buildings.

Provisions are also made for personnel walkways to equipment (for routine maintenance only), doors, stairs/fixed ladders, and other access points. Vertical access hatches are located to facilitate moving equipment and materials. Fire separation walls and floors are provided in accordance with code requirements. Plant security and life safety features are also considered in the plant layout. Building sizes are listed in Table 8-2.

Table 8-2

Buildings and Enclosure Sizes

Building/ Enclosure	Dimensions			Exterior Envelope	
	Length	Width	Height	Wall	Roof
Control/ workshop/ laboratory	58.0 m	22.2 m	9.5 m/ 5.0 m	Insulated metal siding with interior liner panels	Membrane roofing over metal deck with insulation
Flue gas blower buildings	19.7 m	18.9 m	10.0 m	Insulated metal siding with interior liner panels	Membrane roofing over metal deck with insulation
CO_2 compressor building	43.8 m	18.8 m	10.0 m	Insulated metal siding with interior liner panels	Insulated standing-seam metal panels
Electrical building	25.8 m	27.5 m	6.0 m	Same as CO_2	Same as CO_2

The design and selection of the exterior envelope, including texture and colors for the buildings, is to blend with the existing facility and surrounding nature. Further description of the buildings is provided next.

8.4.1 Compressor Building

The compressor building can house equipment such as the compressor, storage drums, and pumps and is required for noise reduction. Acoustical walls, roof insulation, and acoustical louvers are provided for noise reduction. Laydown areas are provided to enable easy handling/transportation during maintenance and repair. Overhead cranes or hoists are provided as required for maintenance. Internal and external explosions are considered.

8.4.2 Flue Gas Blower Enclosures

The flue gas blower enclosures are buildings can house the blowers and ancillary equipment. The enclosures are intended for noise reduction.

8.4.3 Control/Workshop/Laboratory Building

The control/workshop/laboratory building is a single-story structure that houses control equipment, offices, meeting room, workshop area, storage area, and a laboratory. The building also houses the central control room (CCR) and restrooms, including the kitchen facility. The CCR and other rooms are designed with a false floor for installation of electrical/instrumentation cabinets.

The CCR and administration areas have wide corridors and clear exits designed in simple linear formation to facilitate emergency evacuation. The control/workshop/laboratory building is designed in full compliance with accessibility requirements. The office spaces used by permanent staff are designed with permanent partitions, and open offices are designed with system furniture for plant employees and visitors. The office floor has carpet and tile, and the CCR has recessed access flooring. Kitchen, restrooms, showers, and lockers have ceramic tile flooring. The workshop and stores area and the mechanical room have sealed concrete flooring with hardener.

Table 8-3 lists the recommended finishes for the main areas.

Table 8-3

Interior Finishes

Area	Floor	Walls		Ceiling	
		Material	Finish	Material	Height
Administration area	Carpet	Drywall	Paint	Acoustical ceiling tile	2.75 m
Conference room	Carpet	Drywall	Paint	Acoustical ceiling tile	2.75 m
Offices	Carpet	Drywall	Paint	Acoustical ceiling tile	2.75 m
CCR	Access floor	Drywall	Paint	Acoustical ceiling tile	2.75 m
Canteen/staff/social room	Vinyl tile	Drywall	Paint	Acoustical ceiling tile	2.75 m
Kitchen	Unglazed ceramic tile	Drywall	Ceramic tile/paint	Acoustical ceiling tile	2.75 m
Toilet/shower/lockers	Unglazed ceramic tile	Drywall	Ceramic tile	Drywall ceiling	2.75 m
Mechanical/ maintenance area	Concrete floor	CMU/ drywall	Paint	Exposed	–

Workshop/store area	Concrete floor	CMU/ drywall	Paint	Exposed	–
Equipment buildings	Concrete floor	Interior line	Paint/ prefinished	Exposed	–

8.4.4 Electrical Building

The electrical building is a two-story structure with an elevated concrete floor. Switchgear and other electrical equipment are located on the elevated floor, and a cable spreading room occupies the ground floor.

8.4.5 Continuous Gas Monitoring System Building

The continuous gas monitoring system (CGMS) building is a pre-engineered structure designed for the need for inspection, maintenance, cleaning, and repair.

8.5 Transformer Foundation and Oil Containment

Oil-filled transformers are supported on reinforced concrete foundations and are separated by a fire wall. The foundation supporting the transformers incorporates transformer rails (when applicable) for ease of transportation and placement. A containment pit is provided for the transformers, sized large enough to hold all the oil plus 500 gpm for 10 minutes, plus 6 inches of freeboard. To drain accumulated rainwater from all transformer oil containment areas, a portable sump pump with discharge hose will be provided. Drain piping with an above-ground “quick-disconnect” connection will be routed under and/or above ground to dump into a nearby oily water system drain funnel. 110 Vac power will be provided adjacent to the transformer oil containment areas for easy hook-up of the portable sump pump. An alternative arrangement that would allow valved drainage from the containment sump directly into the oily water separator drain system is also acceptable. In the event of a large oil spill, oil will be removed from the containment with a vacuum truck.

8.6 Tank Bund Area

The bund area is a reinforced concrete structure providing a diked area for chemical storage. The area is capable of collecting the larger of 110% of the inventory of the largest tank within the bund or 25% of the volumes of all the tanks within the bund.

8.7 Building Heating, Ventilation, and Air Conditioning

8.7.1 Compressor Building

The PCC plant’s CO_2 compressor building has wall-mounted ventilation supply fans. Air is exhausted through the wall-mounted backdraft dampers. The air circulation is from an upper building elevation out through the exhaust dampers located near grade. Each supply fan assembly consists of an inlet hood, motorized intake louver, replaceable filter (if required), differential pressure switch, and thermostat. The fan automatically cycles from the thermostat setting.

Thermostatically controlled electric unit heaters are provided to maintain the indoor temperature at 10°C during the winter in unoccupied areas.

In the event of a fire or combustible gas detection, the supply air fans automatically trip. In addition, the electric unit heaters remain in their previous operating state. In the event of a CO_2 leak, the supply air fans continue to operate or are automatically started to aid in venting the building of CO_2. Refer to the Fire and Gas System Cause and Effect Diagram 26301-000-J4-JD-00002 in Appendix Q.

8.7.2 Flue Gas Blower Enclosures

The flue gas blower buildings have wall-mounted ventilation supply fans. Air is exhausted through wall-mounted backdraft dampers. Each supply fan assembly consists of an inlet hood, motorized intake louver, replaceable filter (if required), differential pressure switch, and thermostat. The fan automatically cycles from the thermostat setting.

Thermostatically controlled electric unit heaters are provided to maintain the indoor temperature at 10°C during the winter.

In the event of a fire or combustible gas detection, the supply air fans automatically trip as noted in the Fire and

Gas System Cause and Effect Diagram (26301-000-J4-JD-00002 in Appendix Q). In addition, the electric unit heaters remain in their previous operating state.

8.7.3 Control/Workshop/Laboratory Building

The workshop area of the control/workshop/laboratory building has wall-mounted ventilation supply fans. Air is exhausted through wall-mounted backdraft dampers. Each supply fan assembly consists of an inlet hood, motorized intake louver, replaceable filter (if required), differential pressure switch, and thermostat. The fan automatically cycles from the thermostat setting.

Thermostatically controlled electric unit heaters are provided to maintain the indoor temperature at 10°C during the winter in unoccupied areas.

In the event of a fire or combustible gas detection, the supply air fans automatically trip as noted in the Fire and Gas System Cause and Effect Diagram 26301-000-J4-JD-00002 (Appendix Q). In addition, the electric unit heaters remain in their previous operating state.

The CCR and administrative areas of the control/workshop/laboratory building have two 100% thermostatically controlled, packaged heating, ventilating, and air-conditioning (HVAC) units. Each unit consists of a condensing unit, an air-handling unit, an electric heater, and an intake filter assembly. The conditioned air is supplied through a network of ductwork, dampers and supply diffusers/registers grills. The return air from the CCR and offices is routed back to the HVAC unit through return air ductwork. Air from areas such as the locker rooms, toilets, kitchen, mechanical room, instrumentation and controls shop, and so on is not included in the return air ducting back to the HVAC units. The air-conditioned areas are maintained at 25°C ±1.7°C and 55% relative humidity (summer) and 21°C ±1.7°C.

In the event of a fire, combustible gas, or CO_2 gas detection, the HVAC system automatically shuts down. Refer to the Fire and Gas System Cause and Effect Diagram 26301-000-J4-JD-00002 in Appendix Q.

8.7.4 Electrical Building

The electrical building has two 100% thermostatically controlled, packaged HVAC units. The HVAC supply is ducted to the low- and medium-voltage equipment areas, uninterruptible power supply (UPS), and battery charger area as well as the adjacent battery room. The battery room also has two 100% exhaust fans. The entire supply air from the battery room is exhausted outside. The fans are sized to limit the hydrogen concentration below 2% by volume. A fan malfunction alarm is provided in the plant DCS.

In the event of a fire, combustible gas, or CO_2 gas detection, the HVAC system automatically shuts down. Refer to the Fire and Gas System Cause and Effect Diagram 26301-000-J4-JD-00002 in Appendix Q.

8.8 Access, Paving, and Landscaping

8.8.1 Access Roads and Paved Areas

Table 8-4 indicates the types of roads and paved surfaces within the PCC boundary limit. Subgrade for roads and parking areas will be prepared during the site development phase of the project. Subgrade preparation and compaction criteria will be same as those used for NGCC roads, but final geotechnical investigation will be reviewed. The roads and surfaces will be cross-sloped to adequately drain all stormwaters to drainage ditches or to catch basins connected to a closed conduit drainage system. If a drainage ditch is not used to control the stormwater roadway runoff, a 2 ft wide concrete curb and gutter will be used with curb inlet connected to a closed conduit drainage system.

Roadways within the plant facility will be designed for AASHTO HS20-44 loading.

Pavement will be asphalt concrete and designed in accordance with the recommendation of The Asphalt Institute.

Table 8-4

Type of Roads and Paved Surfaces

Type	Material	Description
Main plant access road	Asphalt gravel	Main plant access roads serve as through-roads to and from PCC.
Main service road	Asphalt gravel	Main service roads provide primary access to the process areas, buildings, and equipment.
Module road	Asphalt concrete	Module roads provide transport for modules and other heavy equipment.
Service road	Asphalt gravel	Service roads provide secondary access to the process areas, buildings, and equipment.
Walkways	Concrete	Walkways provide access, by foot, along all main plant access roads and between plant facilities.
Light-duty paving	Concrete	These are paved areas subject to chemical spillage; they include retention curbs.

8.8.2 Landscaping

The site is to be landscaped with trees, shrubbery, and bushes to enhance the plant appearance, improve building appearance from the road, enhance the surrounding ecosystem, and control stormwater runoff.

8.9 Painting and Coating

Painting and coating requirements are provided in Chapter 10.

Chapter 9: Overall Facility Performance

9.1 PCC Plant Reliability/Availability/ Maintainability Analysis

9.1.1 Reliability Methodology

The objective of this analysis is to provide a high-level quantitative assessment of the level of performance that may be expected from the PCC plant during its 20-year operation.

The methodology used to assess the reliability of the Sherman PCC plant is based on the traditional reliability, availability, and maintainability (RAM) analysis provided for power plants. The PCC plant is first divided into systems, and a reliability block flow diagram is constructed to depict the system configuration. This is shown in Figure 9-1. The blocks representing the eight systems are not necessarily in any sequence. Each block is then further broken down into components and the reliability of each system estimated based on its configuration and component reliability data. The reliability of the entire plant is the aggregate of all the systems.

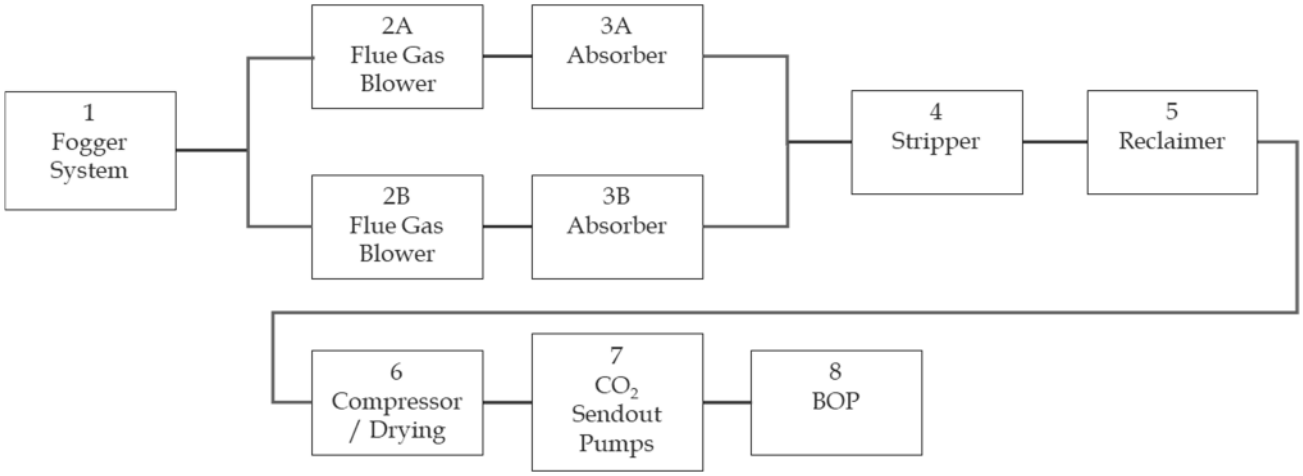

Figure 9-1

Block Diagram of PCC Systems

Component-level information on the systems is provided next; not every component is shown in this high-level reliability analysis.

- **Fogger system**. This system is shown in Figure 9-2. The component most vulnerable to failure is the fogger nozzles due to plugging. Because there are multiple nozzles in the fogger system and they are not likely to plug at the same time, the operators would know from the flue gas temperature if nozzles have started plugging. Access is provided to these nozzles for routine inspection, cleaning, and changeout. As long as proper maintenance is performed, the system should operate reliably. The water supply pumps in the system are redundant.

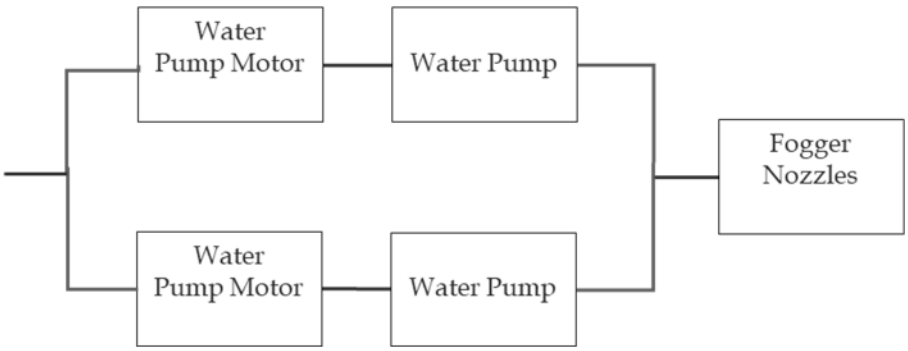

Figure 9-2

Fogger System (System 1)

- **Flue gas blowers.** Components of this system are shown in Figure 9-3. Two 50% blowers are provided, so the PCC plant will operate at 50% load if one of the blowers fails.



Figure 9-3

Flue Gas Blowers System (System 2)

- **Absorbers.** Absorber components are shown in Figure 9-4. Because the two 50% absorber towers are constructed with stainless steel materials, their failure due to metal corrosion has not been considered. The absorbers have stationary packing in them, which may foul or degrade over long periods but do not cause sudden plant outages. The effect of tower internals such as trays and packing is not included in this assessment. The rich amine pumps, water wash pumps, and semi-lean amine pumps are redundant. There is one wash water cooler for each absorber and a single lean amine cooler for the two absorbers.

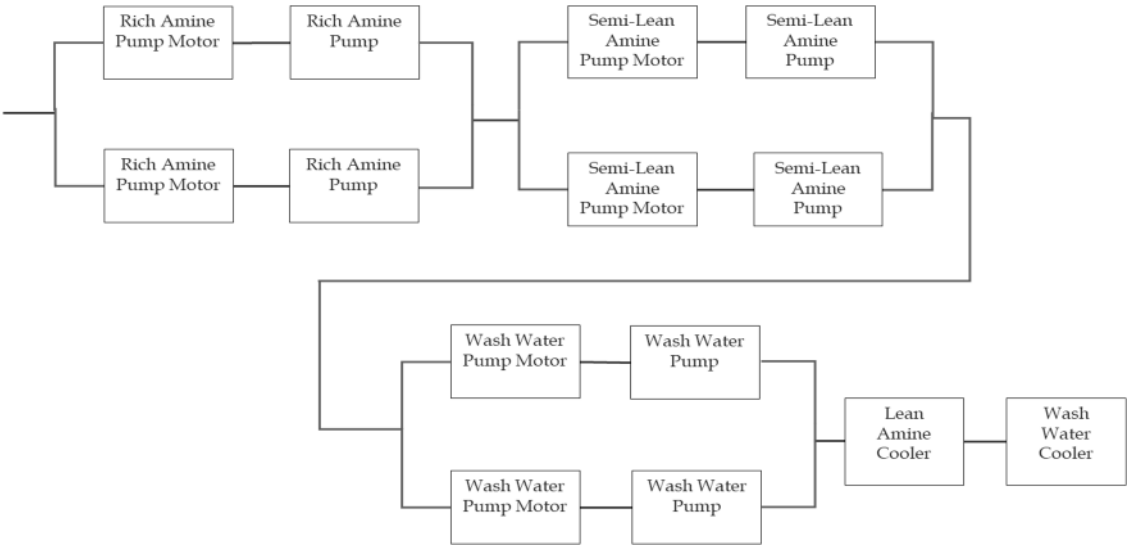

Figure 9-4
Absorber Tower System (System 3)

- **Stripper.** Components associated with the stripper system are shown in Figure 9-5. The stripper tower is also constructed with stainless steel materials and its failure due to metal corrosion is not considered. Similar to the absorber towers, stripper packing materials will not cause sudden plant outage. The effect of tower internals such as trays and packing is not included in this assessment. The pumps associated with this system are redundant and the heat exchangers—including the reboiler—consist of multiple units; therefore, impact on reliability will not be significant if one is out of service.

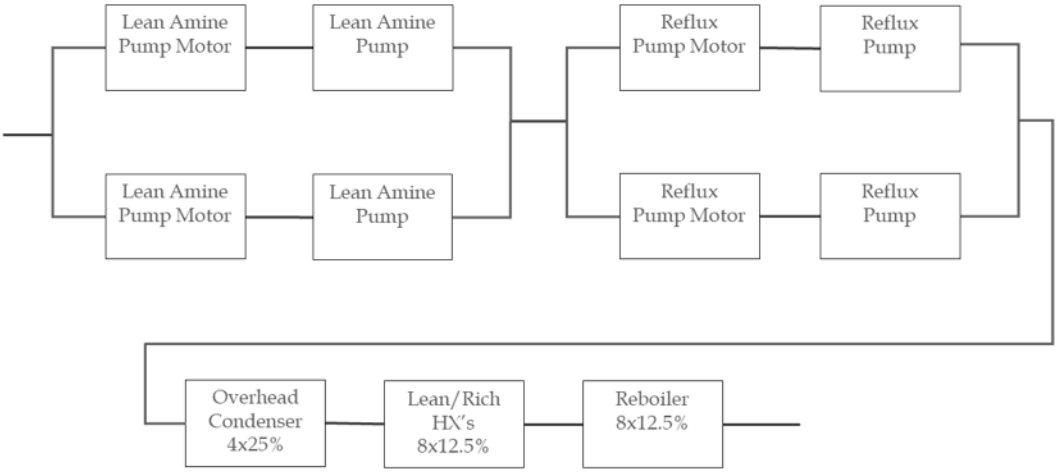

Figure 9-5

Stripper Tower System (System 4)

- **Amine reclamation.** Components associated with the reclaimer system are shown in Figure 9-6. The reclaimer operates six out of seven days; downtime of a few hours to replace a component will not stop the PCC plant from operating nor will availability of the PCC plant be affected.

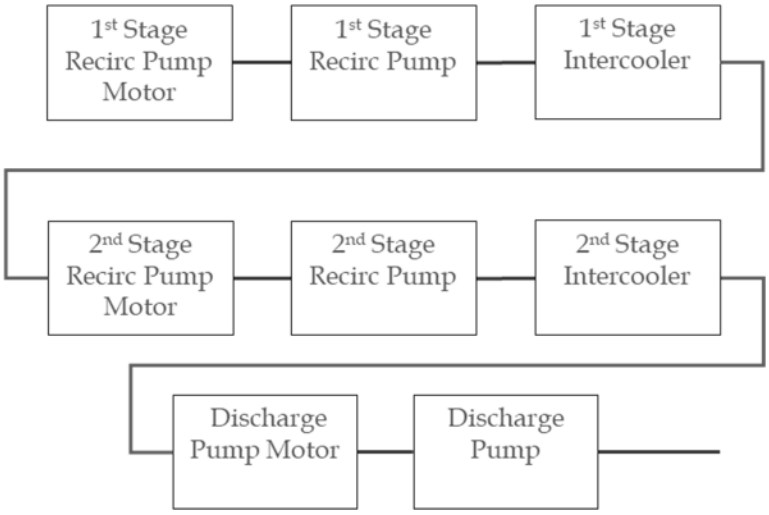

Figure 9-6

Amine Reclaimer System (System 5)

- **CO_2 compressor and dryer.** Compressor components are shown in Figure 9-7. The equipment that has the largest potential for reliability loss is the CO_2 compressor. Due to the high cost of this equipment, a redundant compressor has not been provided. To ensure reliable operation of the compressor, a scheduled outage will be required for inspection and maintenance according to the supplier's recommended schedule. An approximate one-week outage is expected every two years. If an NGCC plant outage is planned, the compressor outage should be taken to coincide with it.

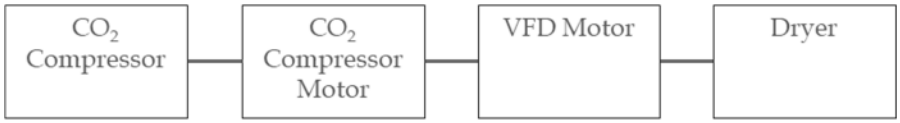

Figure 9-7

CO_2 Compression and Drying System (System 6)

- **CO2 send-out.** Two 100% send-out pumps are provided as shown in Figure 9-8.

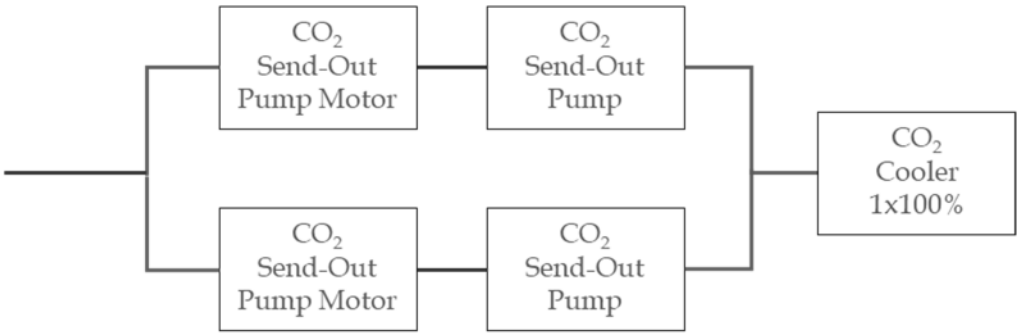

Figure 9-8

CO_2 Send-Out System (System 7)

- **Balance of plant (BOP).** Redundancy is provided in critical areas of BOP such as two sources of power supply for the 13.8 kV switchgear bus, redundant load center transformers, redundant 480 V load centers, and 480 V motor control centers (MCCs). See Figure 9-9.

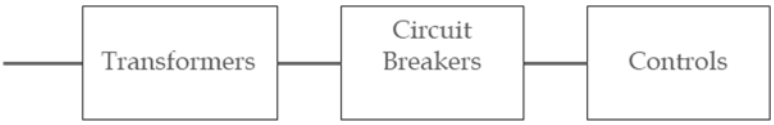

Figure 9-9

Balance-of-Plant System (System 8)

9.1.2 Reliability Estimation

Table 9-1 shows the component reliability data for the major components identified in system block diagrams. Reliability is defined as:

Reliability number = MTBF/(MTBF+MTTR)

Where:

MTBF = mean time between failures
MTTR = mean time to restore

The component reliability data are obtained from the following sources:

- North American Electric Reliability Corporation (NREC) Generating Availability Data System (GADS) 2008 [8]
- IEEE Standard 493-2007
- OREDA data [9]
- Data from Karsto Study RAM analysis

Table 9-1

Component Reliability Data

System	Component	MTBF (hrs)	MTTR (hrs)	Reliability	Source
1	Fogger	2240000	8	1.0000	
	Water pump	8760	27	0.9969	OREDA 2015
	Water pump motor	50808	22	0.9996	OREDA 2015
2	Blower fan	7300	24.5	0.9967	GADS ID fan
	Fan motor	18638	20	0.9989	GADS ID fan
	Variable-frequency drive	219000	15	0.9999	GADS ID fan
3	Rich amine pump	8760	158	0.9998	OREDA 2015
	Rich amine pump motor	50808	22	0.9996	OREDA 2015
	Semi-lean amine pump	8760	27	0.9969	OREDA 2015
	Semi-lean pump motor	50808	22	0.9996	OREDA 2015
	Wash water pump	8760	27	0.9969	OREDA 2015
	Wash water pump motor	50808	22	0.9996	OREDA 2015
	Lean amine cooler	17520	24	0.9986	
	Wash water cooler	17520	24	0.9986	
4	Lean amine pump	8760	27	0.9969	OREDA 2015
	Lean amine pump motor	50808	22	0.9996	OREDA 2015
	Reflux pump	8760	27	0.9969	OREDA 2015
	Reflux pump motor	50808	22	0.9996	OREDA 2015
	Overhead condenser	17520	24	0.9986	
	Lean/rich HXs	17520	24	.9986	
	Reboiler	17520	24	0.9986	
5	Amine reclamation			1.0000	

Table 9-1 (continued)

Component Reliability Data

System	Component	MTBF (hrs)	MTTR (hrs)	Reliability	Source
6	Compressor	60606	30	0.9995	OREDA/GADS
	Compressor motor	79636	36	0.9995	
	Variable-frequency drive	67680	16	0.9997	
	Dryer	3831360	5	1.0000	
	Compressor overhaul	17520	168	0.9905	1 week every 2 years
7	Send-out pump	5153	30	0.9942	GADS; use BFP data
	Pump motor	26545	58	0.9978	GADS; use BFP data
	CO_2 cooler	52560	36	0.9993	
8	Transformers	2136585	378	0.9998	IEEE
	Circuit breakers	1684615	32	1.0000	
	Controls	10345	3.68	0.9996	IEEE

Table 9-2 lists each system and its overall reliability.

Table 9-2

System Reliability

System	Equipment Name	Reliability
1	Fogger system	0.9965
2	Flue gas blowers	0.9955
3	Absorbers	0.9896
4	Stripper	0.9889
5	Amine reclamation	1.0000
6	CO_2 compressor/dryer	0.9892
7	CO_2 send-out	0.9913
8	Balance-of-plant equipment	0.9994
Total		0.9514

9.1.3 Reliability and Availability Results

In a MEA-based amine plant, the reliability losses are mainly due to equipment corrosion. The proposed design uses stainless steel vessels, heat exchangers, pumps, and piping where there is corrosion potential due to MEA. As a result, the common corrosion problems associated with MEA-based processes do not apply in the process described here. Another factor for reliability loss in a plant is due to rotating equipment. To account for this, all pumps are redundant. The only rotating equipment that is not redundant is the compressor because of its high cost. Blowers are not redundant but 50% capacity each. All other major equipment is either redundant as described in Section 9.1.1 or consists of multiple smaller pieces such as fogger nozzles and heat exchangers.

The estimated PCC plant reliability from Table 9-2 is 95.14%. If the compressor outage can be scheduled to coincide with the power plant outage, PCC plant availability will improve further.

9.1.4 Maintainability

The design of the CO_2 plant has considered maintainability. Appropriate materials and redundancies are provided as described in the sections above. Regular maintenance of equipment according to suppliers' recommendations and availability of critical spare parts at the site—such as compressor seal and electrical control parts—should render a high-reliability plant.

9.2 Emissions

The PCC plant will employ a 35 wt% aqueous solution of MEA to capture CO_2 gas from the diverted flue gas stream of a combined cycle–natural gas fired power plant. The plant will generate airborne emissions and liquid and solid wastes under normal operating conditions. The emissions from PCC plant absorbers are shown in Section 3.5, Exhaust, Emissions, and Waste. The process streams representing the airborne emissions in the Heat and Mass Balance (26301-000-M4-CN-00001) are 103 and 203. Heat and Mass Balance is included at the end of Chapter 3.

The emissions rates are based on the given design bases, simulation calculations, and/or assumed amine degradation rates. They will be further studied during the pilot plant phase for accuracy and to determine if improvements can be made.

9.3 Noise

The noise emission for all equipment will be specified to 85 dBA at 1 m. A detailed noise analysis will be required for noise level at the property line and amendment to the noise permit requested, if necessary.

The following major noise sources were identified and are considered in the FEED study:

- Heat recovery steam generator (HRSG) outlet
- Flue gas blowers
- CO_2 compressors
- Building ventilation

The following noise transmission paths are also identified and considered in the noise assessment:

- In-duct noise from the HRSG outlet and flue gas blowers transmitted through the flue gas ductwork, absorber shells, and absorber stack exits
- Casing-radiated acoustic energy from blowers and compressors transmitted through building walls, roofs, and ventilation openings

The mitigation measures taken are as follows:

- Flue gas blowers within a building with acoustical walls
- CO_2 compressor within a building with acoustical walls
- Acoustic lagging on flue gas ductwork
- Acoustic lagging of absorber shells
- Low-noise ventilation fans
- Acoustical building ventilation louvres
- Low-noise emergency diesel generator

Chapter 10: Materials Technology

10.1 Materials and Selection Basis

This section outlines the recommendations for metallic materials of construction for the post-combustion carbon (PCC) plant to mitigate against the effects of corrosion and identifies the materials used in this FEED. The following systems are addressed:

- Amine service
- CO_2 service
- Utility services

10.1.1 Amine Service

The specific metallic materials of construction for equipment and piping in amine service depend on the amine chosen to remove CO_2, the concentration of the amine and the oxygen content of the flue gas, and the design temperature/pressure conditions in the process. Stainless steel (SS) is the preferred material in this service to avoid corrosion.

For this project, which uses MEA at 35 (wt%), Type 304/304L SS was selected as the minimum required material of construction for all items of equipment and piping in amine service. It is important to note that in welded applications, Type 304L SS is required. The use of L-grade material minimizes sensitization of the weld heat-affected zone (HAZ) during fabrication, resulting in welds that maintain the required corrosion resistance.

10.1.1.1 Pressure Boundaries, Internals, Piping, and Valves

Because of the corrosivity of concentrated amine solutions, particularly the rich amine streams that contain a high loading of CO_2, solid Type 304L stainless steel was used for the pressure boundary and internal materials of all vessels, drums, heat exchangers, and pumps exposed to amines as well as all amine service piping and valves. For non-welded internals or other non-welded components, Type 304 SS is acceptable. Substituting Type 316L/316 SS for Type 304L/304 SS is acceptable because of the superior corrosion resistance of Type 316L/316 SS.

Depending on vessel, drum, or heat exchanger shell thickness, it may be more cost effective to use carbon steel material clad with 3 mm (1/8 in.) of Type 304L SS. This can be investigated during detail design.

10.1.1.2 Heat Exchangers

Because plate heat exchangers in amine service are cooled with cooling water from the power plant's circulating water system, which has elevated chloride levels (2216 ppm), titanium plate materials were used. The use of any of the 300 Series stainless steels is unacceptable because SS materials are susceptible to pitting, crevice corrosion, and chloride stress corrosion cracking in chloride-bearing media.

Plate exchangers that are strictly in amine service, such as the rich/lean exchangers, are Type 316L SS.

10.1.1.3 Pumps

Amines—particularly rich amine—are corrosive and become even more so as fluid velocity increases. Therefore, amine service pumps and piping are constructed of stainless steel materials. Cast material shall conform to Grade CF8 or CF8M (CF3 or CF3M if welded and not solution-annealed after weld repair), and wrought material shall conform to Type 304 or 316 SS (Type 304L or 316L SS if welded).

10.1.1.4 Stripper Tower

The stripper is in very corrosive service because the rich amine is flashed as it enters the tower, and the amine is further stripped by steam. The released CO_2 is free to combine with water vapor as it moves up the tower and forms carbonic acid in the tower and overhead system. The tower and all equipment and piping in the overhead system are exposed to carbonic acid; therefore, Type 304L SS was used. Structured packing in the stripper is also 304L SS.

10.1.1.5 Absorbers

The lean amine stream from the CO_2 stripper is recycled back to the absorbers. Although most of the CO_2 has been

removed from this stream, the lean amine still contains some CO_2 and amine degradation compounds that are corrosive; consequently, the absorber vessels are Type 304L SS. The lean amine that is recycled back to the absorbers combines with the CO_2 from the flue gas to form a corrosive rich amine in the absorbers. Both the absorber towers and the associated equipment and piping handling the rich amine stream that leaves the towers for the stripper must be fabricated from Type 304L SS or 316L SS.

The structured packing in the absorbers is 304/304L SS. All other internals such as the demisters, wash beds, support grids, etc. are 304L SS.

10.1.2 CO_2 Service

10.1.2.1 Vessels, Drums, Shells, and Piping

When water in the saturated CO_2 condenses in the overhead system (top of stripper), it forms carbonic acid. Carbonic acid is extremely corrosive toward carbon steel—therefore, vessels, drums, exchanger and condenser shells, and piping in CO_2 service, such as the overhead system of the CO_2 stripper, are Type 304L SS.

10.1.2.2 CO_2 Compression Section (1st and 2nd Stage)

To address the carbonic acid in the CO_2 compression section, 304L SS is used for the tube side of the steam generators that carry CO_2. Carbon steel is used on the shell side that contains low-pressure steam. For the Stage 1 and Stage 2 intercoolers, titanium is used for the tubes to resist high-chloride cooling water; Type 304L SS is used for the shell-side materials for carbonic acid resistance.

In this section, piping and drums in contact with CO_2 or carbonic acid are fabricated from stainless steel to resist carbonic acid corrosion.

10.1.2.3 Drying and 3rd Stage Compression Section

In the drying and compression section, 304L SS is used for the construction of the steam generator, intercooler, drums, and piping because of the potential for depressurization and auto-refrigeration if the system develops a leak. The gas is dry in this portion of the system, so carbonic acid is not a concern.

10.1.2.4 CO_2 Send-Out Pump, CO_2 Product Cooler, and Discharge Piping

Downstream of the 3rd stage compression section, 304L SS is used for CO_2 service because of potential low temperatures if a CO_2 leak occurs. The CO_2 product cooler tubes are made of titanium because they are cooled by cooling water with high chlorides.

10.1.3 Utility Services

10.1.3.1 Steam and Condensate Piping

Steam and condensate piping is ASTM A106 Grade B or ASTM A53 Grade B, with 1.2 mm (0.050 in.) corrosion allowance. Valves have a cast steel body, ASTM A216 WCB, with F6 valve trim.

10.1.3.2 Compressed Air, Nitrogen Service, Process Water, Amine Waste, and Wastewater Piping

The material for compressed air, nitrogen, process water, amine waste, and wastewater piping is ASTM A106 Grade B or ASTM A53 Grade B, with a corrosion allowance of 3 mm (1/8 inch).

Instrument air piping is Type 304/304L SS or copper piping.

10.1.3.3 Fire Water, Cooling Water, and Potable Water Piping

The fire water underground loop is National Fire Protection Association (NFPA)-approved high-density polyethylene (HDPE), consistent with what is used on the Sherman power plant.

The main supply and return cooling water pipe from the power plant circulating water system is prestressed concrete cylinder pipe (PCCP). HDPE is used for underground branches in the PCC plant.

Potable water piping at Sherman power plant is HDPE for underground and copper for aboveground; the same materials are used for the PCC plant.

10.2 Paintings and Coatings

Painting and coatings considered for PCC equipment and materials are listed in Table 10-1. The coating systems for these components were selected to maximize their corrosion protection.

Table 10-1

Paintings and Coatings

Description	Surface Prep	Primer	Finish Coat
1.0 Structural and Miscellaneous Steel			
1.1 Structural and miscellaneous steel including platform steel and pipe and cable racks – indoor	SP10	75–125 µm of inorganic zinc primer, single coat (two-component system solvent ethyl silicate–based inorganic zinc primer) system	N/A
1.2 Structural and miscellaneous steel including platform steel and pipe and cable racks – outdoor	SP10	75–125 µm of inorganic zinc primer, single coat (two-component system solvent ethyl silicate–based inorganic zinc primer)	N/A
1.3 High-strength (A-490) nuts and bolts – indoor	Dacromet (dip/spin application) N/A N/A		
1.4 Miscellaneous nuts and bolts other than A-490 – indoor	N/A	Hot dip galvanized ASTM A153 or mechanically galvanized per ASTM B695	N/A
1.5 Miscellaneous nuts and bolts other than A-490 – outdoor	N/A	Hot dip galvanized ASTM A153 or mechanically galvanized per ASTM B695	N/A
1.6 Structural and miscellaneous steel exposed to wet conditions – indoor or outdoor	SP10	150–225 µm high-build self-priming catalyzed epoxy primer	150–225 µm high-build self-priming catalyzed epoxy primer
2.0 Piping and Valves			
2.1 Non-insulated carbon steel piping and valves including hangers and supports <400°C – indoor	SP6	75–125 µm of ethyl silicate inorganic zinc	40–65 silicone or modified silicone with a total volume solids content of 40% silicone
2.2 Non-insulated carbon steel piping and valves including hangers and supports <104°C – outdoor	SP6	100–150 µm of organic zinc epoxy primer	75–125 µm high-build catalyzed aliphatic acrylic urethane or polyurethane

Table 10-1 (continued)

Paintings and Coatings

Description	Surface Prep	Primer	Finish Coat
2.3 Non-insulated carbon steel piping and valves including hangers and supports >104°C to <400°C – indoor/outdoor	SP6	75–125 µm of ethyl silicate inorganic zinc	40–65 silicone or modified silicone with a total volume solids content of 40% silicone
2.4 Non-insulated stainless-steel piping and valves <104°C - outdoor (hangers and supports per 2.1)	N/A	N/A	N/A
2.5 Non-insulated stainless-steel piping and valves <104°C – indoor (hangers and supports per 2.1)	N/A	N/A	N/A
2.6 Insulated stainless steel piping and valves <121°C – outdoor (hangers and supports per 2.1)	N/A	N/A	N/A
2.7 Insulated stainless steel piping and valves <121°C – indoor (hangers and supports per 2.1)	N/A	N/A	N/A
2.8 Insulated carbon steel piping and valves to <400°C – indoor (hangers and supports per 2.1 or 2.2)	Mfr. Std.	Mfr. Std.	N/A
2.9 Insulated carbon steel piping and valves <121°C outdoor (hangers and supports per 2.1 or 2.2)	SP10	150–200 µm of high-build catalyzed epoxy	N/A
2.10 Insulated carbon steel piping and valves >121°C to <400°C - outdoor (hangers and supports per 2.1 or 2.2)	SP10	150–200 µm of high-build catalyzed epoxy	N/A
3.0 Mechanical Equipment			
3.1 Non-insulated stainless-steel mechanical equipment and associated components including supports <104°C – outdoor	N/A	N/A	N/A
3.2 Non-insulated stainless-steel mechanical equipment and associated components including supports – indoor	N/A	N/A	N/A

Table 10-1 (continued)

Paintings and Coatings

Description	Surface Prep	Primer	Finish Coat
3.3 Non-insulated small (<5 m^2) carbon steel mechanical equipment and associated components including supports to <400°C – indoor/outdoor	Mfr. Std.	Mfr. Std. (suitable for exposure conditions)	Mfr. Std. (suitable for exposure conditions)
3.4 Non-insulated amine and other chemical skid steel – indoor/outdoor	SP 10	250–300 µm of chemical resistant coating	250–300 µm of chemical resistant coating
4.0 Tanks or Vessels			
4.1 Non-insulated shop fabricated carbon steel tanks and vessels <104°C – outdoor	SP10/Sa 2.5	100–150 µm rust-inhibitive catalyzed epoxy primer	75–100 µm of epoxy intermediate and 75–125 µm of polyurethane
4.2 Non-insulated shop fabricated carbon steel tank and vessels <104°C indoor	SP10/Sa 2.5	100–150 µm rust-inhibitive catalyzed epoxy primer	75–125 µm of polyurethane
4.3 Non-insulated field-erected carbon steel tanks and vessels <104°C – outdoor	SP10/Sa 2.5	75–125 µm ethyl silicate–based inorganic zinc primer	75–100 µm of epoxy intermediate and 75–125 µm of polyurethane
4.4 Non-insulated shop fabricated stainless steel tanks and vessels <104°C – outdoor	N/A	N/A	N/A
4.5 Non-insulated shop fabricated stainless steel	N/A	N/A	N/A
4.6 Insulated shop fabricated carbon steel tanks and vessels <121°C indoor	Mfr. Std.	Mfr. Std.	Mfr. Std.
4.7 Insulated shop fabricated carbon steel tanks and vessels <121°C – outdoor	SP10/Sa 2.5	150–200 µm high-build catalyzed epoxy	N/A
4.8 Insulated shop fabricated stainless steel tanks and vessels <121°C – outdoor	N/A	N/A	N/A
4.9 Insulated shop- fabricated carbon steel tanks and vessels >121°C to <400°C – outdoor	SP10/Sa 2.5	75–125 µm of ethyl silicate inorganic zinc	N/A
4.10 Interior of carbon steel tanks and vessels	Corrosion-resistant coating materials or alloy materials suitable for the design conditions		

Table 10-1 (continued)

Paintings and Coatings

Description	Surface Prep	Primer	Finish Coat
5.0 Pumps and Motors			
5.1 Non-insulated pumps, motors, and supports <104°C – outdoor	SP6	100–150 µm of organic zinc epoxy primer	75–125 µm high-build catalyzed aliphatic acrylic-urethane or polyurethane of mixed material
5.2 Non-insulated pumps, motors, and supports <400°C – indoor	SP6	Inorganic zinc single coat	Two-component Solvent ethyl silicate based inorganic zinc
5.3 Insulated pumps <121°C – indoor or outdoor	SP10/Sa 2.5	150–200 µm high-build catalyzed epoxy	N/A
6.0 Electrical and Control			
6.1 Switchgears, motor control center, chargers, inverters, switchboards, local device, local control panels and cabinets, and so on	Mfr. Std.	Manufacturer's standard primer and finish or 125–175 µm powder coatings suitable for service and environmental conditions	
6.2 Boards/consoles and other associated components	Mfr. Std.	Manufacturer's standard primer and finish or 125175 µm powder coatings suitable for service and environmental conditions	
6.3 Miscellaneous electrical and control instruments	Mfr. Std.	Manufacturer's standard primer and finish or powder coatings suitable for service and environmental conditions	
6.4 Power transformers, enclosure/modules and large (>5 m^2) electrical equipment	Mfr. Std.	Manufacturer's standard epoxy primer, epoxy intermediate and polyurethane powder coating suitable for design and atmospheric exposure conditions 75-100 µm of epoxy intermediate and 75- 125 µm of polyurethane	
6.5 Electrical motors indoor or outdoor	Mfr. Std.	Epoxy primer and epoxy or polyurethane topcoat	
7.0 Misc. Steel			
7.1 Outdoor platform grating, stair grating, toe plates, and so on – indoor or outdoor	Per Code	Hot dip galvanized to a minimum of 705 g/m^2 per ASTM A123 or equivalent ISO standard	N/A
7.2 Platform handrail, stair steel, and ladders – indoor	SP10	Hot dip galvanized to a minimum of 705 g/m^2 per ASTM A123 or equivalent ISO standard	N/A
7.3 Platform handrail, stair steel, and ladders – outdoor	SP10	Hot dip galvanized to a minimum of 705 g/m^2 per ASTM A123 or 75–100 µm rust-inhibitive catalyzed epoxy primer	N/A

Chapter 11: Environmental, Safety, and Health

11.1 ES&H Considerations in Design

The PCC plant equipment and process have been selected to reduce the risk and magnitude of impact on the environment and on the health and safety of workers and neighbors. Although impact on NGCC plant was also considered during the design, a thorough and independent ES&H impact assessment of PCC plant on NGCC plant should be conducted during the next phase.

Some of the areas that should be addressed are as follows:

- Project philosophy
- ES&H principles/policies
- Legal and other requirements
- Risks and opportunities
- Environmental aspects
- Duties and responsibilities
- Training and awareness
- Safety audits/assessments
- Emergency preparedness and response
- Incident investigations and recording
- Corrective/preventive action

11.2 Occupational Health and Safety

Project management should promote continual improvement in health and safety performance. This includes commitment to the following:

- Maintain a philosophy that all accidents are preventable.
- Comply with contractual commitments, internal process and procedures, and applicable codes, standards, and regulations.
- Measure, monitor, and review progress of annual objectives.
- Share lessons learned and best practices.
- Provide a safe working environment that reduces the likelihood of incidents or cases of occupational ill health to personnel.
- Build a health and safety culture.
- Ensure proper resources to support the health and safety philosophy.

A safety and risk reduction system should be implemented, such as the STARRT Process (Safety Task and Risk Reduction), in which a dynamic risk assessment is reviewed prior to beginning work. It should complement contractor processes and controls and provide a method to communicate these to the workforce. In addition, life critical work requirements (LCR) and proper consequence management should be adhered to at all times. Proper training, communication, and resources that ensure compliance should be provided to the workforce.

In terms of occupational health, service provider details should be clearly identified and communicated to workers. Project management should ensure the health and well-being of personnel through services and programs implemented in the project.

11.2.1 Working Environment

ISO standards for ES&H requirements mandate that the PCC working environment (WE) be assessed and analyzed during the engineering project development life cycle. The purpose of assessing occupational health through suitable ES&H management systems is to ensure that the design promotes a quality WE during a facility's operational phase. This is consistent with the overall ES&H philosophy of providing a "zero-harm" WE for both, the environment and personnel working at the facilities.

ISO 45001 Clause 6.1.2, Hazard Identification and Assessment of Risks and Opportunities recommends the standards and processes an organization should consider for the Occupational Health and Safety (OH&S) Management System. The management system covers hazard identification and control and should be ongoing

and proactive. The processes consider all hazards that may threaten the safety of workers, including those arising from the following:

- Infrastructure, equipment, materials, or physical conditions of the workplace
- Product and service design, research, development, testing, construction, etc.
- Human factors
- How the work is performed

The risks considered for the EMS and OH&S management system should have defined assessment criteria with respect to the scope, nature, and timing of the project to ensure effectiveness of controls and their implementation.

11.2.2 Project Hazards

Sufficiently detailed hazard identification (HAZID) and process hazard and operability analysis (HAZOP) studies were completed for the FEED study (see Chapter 13.0). Design optimization of the proposed PCC plant during detailed engineering is possible through careful implementation of the recommendations provided as a result of these risk analyses.

A fundamental conclusion of the assembled HAZID and FEED stage HAZOP teams is that, if the action items are implemented successfully and all recommendations are considered, the identified risks could be mitigated to a level considered as low as reasonably practicable (ALARP).

Further studies of fire and explosion properties of amine/water solutions is required at the outset of detailed engineering to conclusively determine their thermophysical characteristics. A determination of reduced combustibility may yield considerable opportunities to reduce active and passive fire protection requirements, extent of hazardous area classifications, and potential for additional unclassified areas.

Amine/water solutions under leakage conditions are not considered to present a credible explosion hazard or a potential for pool fire scenarios, except in concentrated form.

There is a significant risk to workers during a leakage in which CO_2 loss of containment occurs. Although extensive gas monitoring and process shutdown/emergency shutdown (PSD/ESD) systems are employed, the PCC plant represents a first-in-kind facility (in terms of size and scale) employing supercritical CO_2. Available research suggests that both thermal and toxic effects expose workers to potentially hazardous working conditions.

Further recommendations for fire and explosion strategy (FES) and escape strategies are detailed in Sections 11.4 and 11.5, respectively.

11.3 Environment

All environmental risks and hazards should be analyzed during EPC to implement proper mitigation techniques that align with the latest standards, contract requirements, and the Sherman power plant permits. Significant attention should be given to emission limits and chemical usage and storage.

The PCC plant FEED design includes features to monitor and manage emissions. The design considers the recycling of effluents to the process to minimize waste. Laboratory facilities are provided in the design to ensure that regulatory requirements documented in the Environmental Impact Assessment (EIA) and regulatory permits are adhered to.

11.4 Fire and Explosion Strategy

As part of safety and health plans, a FES should be developed in accordance with ISO 13702 to examine fire and explosion hazards associated with the PCC plant. Following are the design objectives of the FES:

- Provide direction to project management in controlling fire and explosion (F&E) hazards associated with this project
- Establish a strategy to ensure that the identified F&E hazards associated with the operational development phases are addressed

This section lists preliminary FES components and/or recommendations for the PCC.

11.4.1 Fire and Explosion Hazards

The PCC plant consists of three main zones for the development of the FES:

- Flue gas tie-in area (blower and quench section)
- CO_2 compression and drying section

- Amine process and storage areas

Flue Gas Tie-In Area

The potential for F&E in the blower and quench section is minimal because of the nature of the process materials (water and flue gas). However, there is a potential for a fire involving the flue gas blower lube oil skids. Lube oil fires are addressed in Chapter 5.

CO_2 Compression and Drying Section

The potential for F&E in the CO_2 compression and drying section is minimal because of the nature of the process and the materials handled. However, there is a potential for a fire involving the CO_2 compressor lube oil skids, similar to the blower lube oil fire discussed above. Available research indicates that a boiling liquid/ expanding vapor explosion (BLEVE) is unlikely to occur with the supercritical CO_2 present in the PCC plant. Although there may be a rapid release with some pressure rise, such an event is not followed by a vapor cloud explosion as could be the case with flammable liquids.

Amine Process and Storage Areas

The main PCC plant fire hazards involve the amine processing and storage areas, which can be subdivided into the following process sections:

- CO_2 absorption
- Heat integration
- CO_2 stripping
- Amine reclamation
- Amine storage

For FEED, amine solutions in water are treated as combustible mixtures in the compositions used in the design. Further study of aqueous amine solutions to confirm flammability could result in an optimized design in which reduced flammability is verified. Safety data, outside the scope of Chapter 11, for MEA is described in the MEA Safety Data Sheet (Appendix V).

11.4.2 Ignition Source Control

The potential for ignition is minimized because all outdoor equipment is suitable for Zone 2, Group IIA, and Temperature Class T2 hazardous area classification as a minimum. Equipment and piping surface temperatures are well below the auto-ignition temperature of monoethanolamine (MEA) (410°C).

Other plant areas are non-classified by design or are protected by spatial distancing such that, if an incident occurs in a classified area, it will not have an adverse impact on these areas.

Hot surface, electrostatic, lightning, and hot work ignition sources are well controlled due to features incorporated into the design.

11.4.3 Fire and Gas Detection

The fire and gas (F&G) detection system should have various detectors within the PCC plant battery limit (B/L) to detect the presence of CO_2, combustible gas, smoke, and fire.

The F&G detection system status and alarms are annunciated at the distributed control system (DCS) operator stations.

A manual operator response is required for F&G alarms. Some automatic actions are taken by the system, such as shutting down ventilation inside a building on combustible gas detection and discharging extinguishing agent. Automatic actions in response to F&G detection are described in the cause-and-effect chart (Appendix Q).

11.4.4 Depressurizing

The PCC plant contains CO_2 at supercritical conditions. If a leak or equipment failure occurs, the released CO_2 falls to extremely low temperatures, creating a hazard to surrounding equipment and personnel. In addition, the CO_2 concentrations in the local atmosphere may reach dangerous levels.

Depressurizing facilities are installed to ensure that the plant can be depressurized to mitigate the impact of containment loss. The depressurizing rate, valve, and piping need to be carefully designed to prevent excessively low temperatures and dry ice formation. The plant depressurizing philosophy is described in Chapter 3.0.

11.4.5 Active Fire Protection

The fire water network at the Sherman NGCC power plant site supplies fire water requirements for the PCC plant. The PCC plant design includes a full perimeter,

underground fire ring main tied to the Sherman site fire water system.

PCC plant workers do not approach structural fires. All buildings are fitted with full fire detection and alarming facilities and/or automatic suppression systems.

Further evaluation is needed during detailed engineering to consider the application of specialized, self-contained, high-momentum water mist extinguishing to provide fire suppression for specific hazards (for example, lube oil systems and stationary diesel engine bays).

11.4.6 Passive Fire Protection

The reduced combustibility of aqueous amine solutions limits the potential size of a fire resulting from leakage conditions and under these conditions passive means could be sufficient for protecting the equipment. Prior to implementing passive means, such as, fireproofing of steel with cementitious materials, calculations must be performed per NFPA guidelines to demonstrate that this protection is sufficient without an active fire suppression system.

The FEED design considers passive fire protection on pipe rack structures and skirts for the absorber towers and stripper column.

11.4.7 Emergency Power Systems

Emergency power supply requirements are provided by a dedicated EDG located within the PCC plant B/L.

All critical systems (for example, safety and automation system [SAS], ESD, PSD, F&G detection, and alarms) receive power from the emergency bus under primary power failure conditions to ensure control and monitoring integrity without interruption.

11.4.8 Drainage Systems

The PCC plant design employs both open and closed drainage systems and bunding in specific areas to contain spills of amine and process chemicals to minimize the potential for dimensioning of a spill condition.

The open drain system is used primarily for rain and surface water runoff, which is discharged as wastewater.

The closed drain system is used for amine processing area discharge and system drain-down. The design intent is to recycle amine discharge to the process to prevent effluent.

Pumps in amine service employ high-integrity seal technology to minimize leakage risk.

11.5 Escape, Evacuation, and Rescue Strategy

An escape, evacuation, and rescue (EER) strategy should be prepared for the project, describing the provisions to be implemented for the escape and mustering of personnel from the PCC plant. It should be coordinated with the NGCC power plant's current system. An EER strategy addresses issues such as organization, procedures, information, training, and emergency response—all of which are necessary to achieve a successful EER process.

11.5.1 Escape Strategy

The design must include escape routes so personnel can evacuate safely in case of a hazardous incident. Planning and development must ensure personnel can reach the designated mustering area from any part of the plant.

Escape route planning and preparation should consider the following plant and plant system design elements and interfaces:

- Equipment layout
- Alarms and emergency communication
- Emergency power and lighting
- Passive fire protection
- Structural integrity

An appropriate muster point should be designated for the escaping workers during a called emergency to ensure that a complete head count of all personnel can be made.

Escape may be triggered by an escape call from the plant control room or in response to a local fire or gas alarm annunciator.

All escape routes should employ normally used paths of travel and have signage in accordance with the regulatory requirements. Permanently and intermittently manned areas should have at least two means of egress.

Appropriate emergency lighting and alarm communication systems should be provided so that

personnel can effectively execute emergency duties. In the case of a site-wide escape call, a worker should be able to escape to a designated site-wide muster point.

11.5.2 Evacuation Strategy

The design of the plant and process fluids does not present a credible risk for fire, toxic gas, or explosions that could escalate to the muster area under a single failure event, for example, a localized spill or leak.

Evacuation provisions do not need to be included for all facility personnel. When the facility personnel have assembled in the designated muster point, they should escape to the designated Sherman site-wide muster point under the direction of site-wide emergency services personnel.

11.5.3 Rescue Strategy

Due to the operational requirement to perform field maintenance and intermittent work in confined spaces or above grade, rescue means need to be in place in the event of personnel injury. This emergency extrication planning is addressed in the job hazards analysis (JHA) process developed during detailed engineering.

The coordinated emergency response plan includes safety showers, safety cabinets, first-aid kits, and provisions to ensure that personnel can be safely removed for examination, first-aid, and transport to medical facilities.

11.6 Public Health

An EIA needs to be completed and emissions and discharge limitations for the PCC plant defined.

Emissions modeling is required to ensure that levels are below regulatory limits for both, the environment and worker exposure. Two new emission points will be added due to diversion of flue gas to the PCC plant but there will be no increase in emissions of the permitted constituents. Expected airborne emissions are detailed in Chapter 3, section 3.5. Pilot plant emission data could address whether the addition of a supplementary wash section (acid or water wash) to the absorbers should be considered to limit MEA degradation products such as ammonia from entering the atmosphere.

Open and closed drainage systems for spill and precipitation management must be validated during detailed engineering to ensure that the sizing requirements and treatment levels permit discharge.

Site-wide disposal procedures must be coordinated to ensure that non-hazardous wastes are handled in a manner consistent with site requirements.

Detailed noise modeling should be done to determine the near- and far-field noise levels so that adequate measures can be taken to meet the required limits.

11.7 Observations and Recommendations

ES&H requirements for the overall Sherman site, including requirements covering the owners of the NGCC plant, have not been fully defined for conditions common to process plant environments and should therefore be reviewed during EPC.

Routinely coordinating ES&H planning activities benefits the overall risk profile of a site that has the complexities of Sherman. Further definition of site-wide ES&H practices must be a design absolute during the detailed engineering process.

Additional FEED-stage recommendations offered for consideration during the detailed engineering stage are described in the following subsections.

11.7.1 Working Environment: Occupational Health

The following additional assessment and narratives should be performed during detailed engineering:

- Occupational health risk analyses (JHA, chemical health risk assessment, comparison risk analysis)
- Ergonomic analyses (task analysis, crisis intervention and operability, and valve and instrument access and operability)
- Occupational health design review report
- Material handling assessment (cranes, hoists, etc.)
- Illumination design philosophy
- Alarm management narrative

A formal working environmental risk assessment (WERA) study is also required, including an update of all working environment area charts resulting from actions identified in the WERA.

A full chemical risk analysis study is a design absolute during the appropriate phase of detailed engineering. The

presence of amine degradation products and hazardous wastes creates an exposure risk to the environment and workers that must be fully evaluated to establish the appropriate risk level and to document and validate the preliminary labeling requirements of various wastes anticipated in the operation of the PCC plant.

Due to paucity of data from full scale high-rate reclaimers on amine based PCC for CCGT plants, the decision was to consider reclaimer residuals as hazardous until it can be definitively proven that waste is not hazardous.

11.7.2 Noise and Vibration

Further detailed noise studies/assessments are needed during detailed engineering to model noise emissions that could endanger workers or the environment or affect permits for facility operations. Established working environment area limits (WEALs) must be updated through the EPC phase and validated during the commissioning phase.

11.7.3 Fire and Explosion Strategy

PCC plant staffing is limited. Therefore, the FES does not envision plant employees serving in a firefighting role beyond providing incipient response or triggering manual call points located throughout the facilities. Use of PCC plant fire hydrants and all structural and large-scale firefighting activities must be coordinated through main site fire and emergency services.

Fire protection impairment management procedures and coordination with the main Sherman site requirements require further definition during detailed engineering.

The response time and staff/work-hours from site-wide professional firefighting services must be further defined and documented in the FES when it is revised. To address specific fire potentials (for example, lube oil fire), consideration must be given to using prepackaged, skid-mounted fire suppression systems, such as high-momentum water mist for ordinary combustibles and liquid fires and inert gas systems for high-value concentration electronic equipment.

11.7.4 Escape, Evacuation, and Rescue Strategy/Escape Routes

Escape routes for the PCC plant shall be coordinated with the NGCC plant owner, Panda Power, to ensure site-wide compatibility among routes. Escape from elevated work surfaces in the PCC plant requires further study during detailed engineering to establish the most effective and efficient way for workers to travel to grade and move to a safe distance from a developing event. The philosophy should continue to employ the PCC plant ring road as a primary egress path.

The coordination and triggering of a PCC plant escape to the designated muster point and a site-wide escape call from the central control room (CCR) must be validated and documented.

The availability of emergency services (medical and extrication teams) must be confirmed during the initial stages of detailed engineering. The coordinated emergency response plan must include provisions to ensure that personnel can be safely removed for examination, first aid, and transport to medical facilities.

The availability of egress to the NGCC power plant and site-wide muster point must be ascertained and documented as soon as practicable during detailed engineering.

Because of operational requirements to perform field maintenance and intermittent work in confined spaces or above grade, rescue means need to be in place in the event of personnel injury. This emergency extrication planning must be addressed in the JHA process developed during detailed engineering.

11.7.5 Process Hazard Analysis: HAZID and HAZOP

The plant layout was reviewed for HAZID and HAZOP purposes to ensure that the layout is compatible with ES&H requirements.

All actions and recommendations entered into the recommendation registers for the HAZID and FEED HAZOP studies (see Chapter 13) must be reviewed during the initial stages of detailed engineering to confirm that FEED recommendations have been closed out. Outstanding items on both registers must receive prompt attention for closure as soon as practicable.

11.7.6 Layout Safety

The equipment has been laid out using industry best practices to ensure that incompatible pieces of equipment/processes are kept a sufficient distance apart

and to ensure safe access to and egress from the operating areas.

During detailed engineering, additional optimization of the plant layout should focus on further segregation of hazardous (i.e., amine/CO_2) process areas from the unclassified and manned areas (e.g., electrical building, control room/workshop/laboratory building).

11.7.7 Hazardous Area Classification/Ignition Source Control

The likelihood of fire within the battery limits of the PCC plant is greatly limited due to the limited combustibility of the MEA concentrations present in the amine sections of the plant.

The plant preliminary area classification is based on application of classified equipment to gas Group IIA, Temperature Class T2, specifications for all outdoor equipment. This classification needs to be validated during detailed engineering when absorption solvent thermophysical properties at process concentrations are confirmed.

Chapter 12: Operations and Maintenance

12.1 Operations Philosophy

The Sherman Post-Combustion Capture (PCC) plant system controls are accessible through the distributed control system (DCS) workstations located in the central control room (CCR). The control system design includes automatic control, with interlock functions to minimize operator actions. Operators can manually perform startup, operation, and shutdown functions, with sufficient interlocks to prevent unsafe operation. Abnormal or unsafe operating conditions initiate appropriate alarms followed by subsequent plant shutdown. Restart requires operator initiation.

Plant operations are controlled from the CCR. The following key operator actions are required:

- System line-up and verification that equipment is ready for service prior to system start
- Line-up of offline equipment
- Verification of manual valve (non-actuated) positions
- Verification of tank and vessel levels using sight glass or level gauge
- Operator initiation of plant start after trip or from standby condition
- Operator initiation of plant shutdown for standby (other than permissive/interlock condition)

The control room operator (CRO) operates the plant from the CCR. The CRO's duty station is normally at the main CCR control console. Shift operators assist in verifying system line-ups and equipment conditions as required and directed by the CRO.

12.2 Operations Training and Staffing

12.2.1 Training

The PCC plant training program addresses the operation of the supplied equipment, including applicable theory. The training program is all-inclusive—addressing all plant systems and equipment—and provides the operating personnel with the required knowledge to operate the systems and maintenance personnel with the required knowledge to properly maintain them. Personnel selected to participate in the program are generally limited to those who need such training to perform their duties. The typical training duration is approximately four weeks.

12.2.2 Operating Staff

PCC plant operations are handled by shift operators, the CRO, the shift supervisor, and backup operators (shift positions). In addition, the operations staff is complemented by a support staff (non-shift positions) handling plant administrative activities such as engineering; laboratory services; warehousing; accounting; human resources; and environmental, safety, and health.

The shift operators operate the physical plant equipment, including lining up systems (verifying valve positions for operation), verifying readiness of equipment, placing local control equipment in and out of service, and taking direction from the CRO for placing large equipment and systems in and out of service. The shift operators also assist in collecting data, administering the clearance program, performing light equipment maintenance (lubrication, strainer cleaning, general cleaning), and overall housekeeping.

The CRO operates and controls the overall plant, placing equipment and systems in and out of service using the DCS, directing shift operators on systems operation, maintaining the detailed operations log, coordinating PCC plant operation with the Sherman natural gas–combined cycle power plant (NGCC), advising the NGCC of PCC plant conditions, logging PCC plant conditions, taking appropriate actions as necessary, administering the lock-out/tag-out (LOTO) and safety system, and issuing work authorizations and lock-out tags and locks (clearances).

The shift supervisor manages the CRO and the operator mechanics and manages and administers day-to-day plant activities, including managing the schedule, procuring materials, preparing daily reports, and approving logs. The shift supervisor must be able to

perform the duties of the CRO and the shift operators and fill in on such duties when the need arises.

The plant engineer is a degreed chemical engineer who assists in interpreting supplier information, specifications, operating procedures, and additional instructions to the operators if deficiencies in such are found—as well as providing technical guidance in resolving identified problems. The plant engineer also provides guidance on process details such as required chemicals, solvent conditions, and information on handling various chemicals and materials.

See Figure 12-1, Plant Staffing Chart.

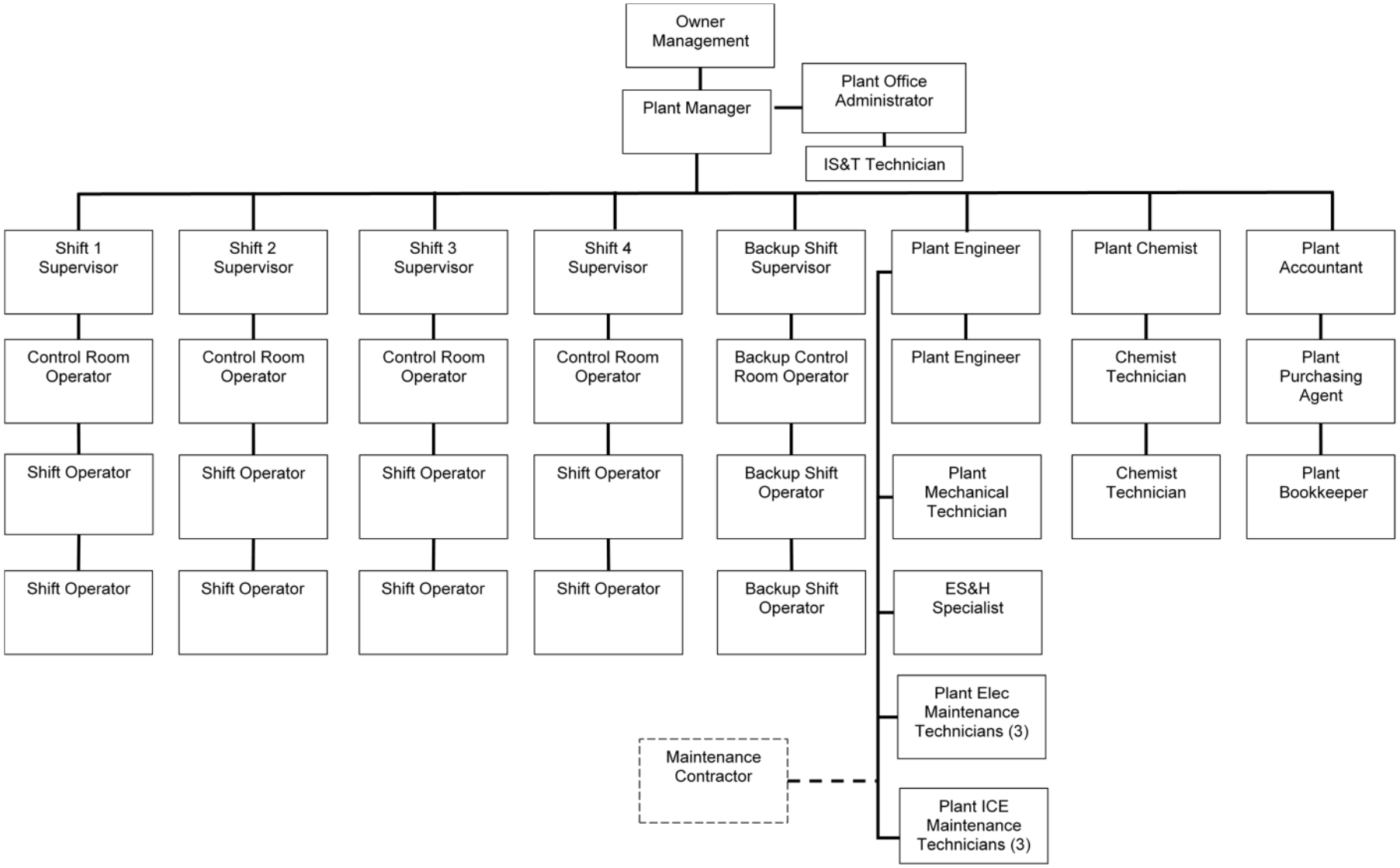

Figure 12-1

Plant Staffing Chart

12.3 Operations Particular Requirements

PCC plant operational prerequisites are discussed in this subsection.

A LOTO and safety system for issuing system lock-out tags and locks (clearances) and work authorizations and administration thereof must be in place. The exact nature of the system is worked out by the parties involved, both inside and outside the plant battery limit (B/L).

Additional required administrative control procedures specific to operations and maintenance include the following:

- **Confined space entry.** This procedure covers monitoring hazardous materials and atmospheres in confined spaces, controlling and accounting for persons entering, and the safety measures that are to be in place.
- **Job hazard analysis.** This procedure covers the step-by-step analysis of potentially hazardous tasks and the step-by-step mitigating measures to be taken.
- **Materials handling plan.** This procedure covers the measures to be in place to prevent spill or uncontrolled escape to the environment when handing chemicals, oils, waste, and so on.

PCC plant personnel must be trained in the plant-specific theory and operation of the equipment.

Plant equipment must be ready for operation, including turnover records documenting equipment commissioning. Monitoring equipment condition and maintaining equipment in a ready-to-operate condition are functions of PCC personnel.

The NGCC and PCC plant operations must be coordinated; this is an activity for the PCC personnel. In addition, status data must be transmitted via link to the Panda NGCC.

12.4 Maintenance Philosophy

In general, planned PCC plant maintenance is scheduled in accordance with original equipment manufacturer (OEM) recommendations. These recommendations are transferred from the supplier documentation to the maintenance list. The plant engineer is responsible for maintaining and updating the list with requirements as deemed appropriate by experience gained during operation.

In addition to their operations duties, the shift operators perform light-duty equipment maintenance (for example, lubrication, cleaning, and gasket replacement).

The personnel who perform routine maintenance are mechanical technicians for mechanical equipment and instrumentation/ controls/electrical (ICE) technicians for instrumentation and electrical items. Shift operators assist these technicians.

12.5 Maintenance Training and Staffing

See Subsection 12.2.1 for a description of PCC plant training.

The maintenance staff consists of the mechanical technicians, the ICE technicians, and the shift operators who perform light maintenance and assist the technicians.

12.6 Maintenance Program Overview

In general, planned PCC plant maintenance is scheduled in accordance with OEM recommendations. These recommendations are transferred from the supplier documentation to the maintenance list. The plant engineer is responsible for maintaining and updating the list with requirements as deemed appropriate by experience gained during operation. See the sample maintenance template in Figure 12-2.

Startup and Operations - Operating Maintenance Template

Bechtel Tag #	Seller Part ID, Serial, Mark #	Component Description	Subcomponent Description	Maintenance Action	Maintenance Frequency	Lubricant Specs	Lubricant Qty	Storage Category	Space Heater (V/kW/O)	Special Inst / Remarks

Operating Maintenance - Template Completion Instructions

Seller to complete the attached template in order to communicate their site operating maintenance requirements to the Buyer. Data inputs shall be complete and specific as stipulated below for all equipment provided by the Seller which requires storage maintenance. Columns which are not applicable shall be populated with "N/A." Entries such as "See IOM Manual" or email references are NOT acceptable and will be rejected. Any deviation from these requirements must be approved by the Project Startup Manager or Representative. Data inputs to this template will be uploaded electronically into Buyer's Equipment Storage and Maintenance Database for program management on the jobsite.

Bechtel Tag # Column

Per equipment list and associated P&IDs, the Buyer's tag number assigned to each piece of equipment.

Seller Part ID, Serial, Mark # Column - Instructions

The characters in this column will be the Seller's unique identifier for the equipment or skid. It is **REQUIRED** that the characters in this column MATCH the characters listed at line item detail on the Seller's Shippable Bill of Materials (SBOM) and Packing lists (as indicated in the Buyer's P.O.). Buyer will use this number/character string to link the technical storage and maintenance requirements to the physical equipment received on the jobsite.

Component Description Column

Description of the tagged item (e.g. Boiler Feed Pump, Air Preheater, Coal Conveyor, Filter Separator) consistent with the Supplier's Equipment List.

Subcomponent(s) Description Column

Subcomponent (requiring storage and maintenance) of the above equipment to be listed by the Seller individually.

For example:
Component – Boiler Feed Pump
Subcomponent: Motor
Subcomponent: Gearbox

Component – Troughed Belt Conveyor
Subcomponent: Gearbox
Subcomponent: Drive Motor
Subcomponent: Belt

Maintenance Action / Maintenance Frequency Columns

Description of storage maintenance or operating maintenance action (e.g. grease bearings, rotate shaft, check space heater) and the frequency in days, which the maintenance action is to occur. However, if action is to occur upon receipt, seller shall indicate "OR" in the frequency column. If action is to occur before commissioning, Seller to indicate "SU" in the frequency column

Examples:
"Rotate shaft several revolutions once a month"
Maintenance Action: Rotate shaft several revolutions
Maintenance Frequency: 30

"Fill Gearbox with Oil Upon Receipt"
Maintenance Action: Fill Gearbox With Oil
Maintenance Frequency: OR

Lubricant Specs / Quantity Columns:

Lubricant Specs Column:

If applicable, Seller to provide the recommended lubricant type and manufacturer associated with each maintenance action (ISO # only NOT acceptable, must name recommended mfr). Seller shall provide approved equivalent if the parent technical specification or PO documents request a specific manufacturer. Examples:
Mobil Gear 632 Falk LTG Lubriplate HO-2 Hydraulic Oil
Shell Turbo J32 Degol GS 1500

Quantity Column: Input required quantity and unit of measure (e.g. 10 gallons, 20 oz).

Storage Category Column – Instructions

Seller to input 1-5 for the required storage category for each piece of equipment requiring special storage maintenance.

Storage Category 1 – Outside Storage
Equipment will be stored as received. Pallets or cribbing as necessary.
Storage Category 2 - Outside Storage, Covered
Equipment will be stored outdoors as received, covered with a tarpaulin or equivalent method to prevent exposure to elements. Pallets or cribbing as necessary.
Storage Category 3 - Outside Covered with Heat
Equipment will be stored outdoors as received, covered with a tarpaulin or equivalent method to prevent exposure to elements and space heater energized to avoid condensation. Pallets or cribbing as necessary.
Storage Category 4 - Inside Storage
Equipment will be stored as received indoors. Space Heaters will be energized as required.
Storage Category 5 - Inside with Controlled Climate
Equipment will be stored as received indoors with controls to maintain temperature and humidity as specified.

Space Heater (V/W/O) Column

If space heater is required, Seller to indicate the voltage (V), Wattage (kW), and number of phases required for connection. This information is required for temporary power supply management on site.

Figure 12-2

Operating Maintenance Template

12.7 Spare Parts

Lists of recommended spare and wear parts for the PCC plant are provided by the equipment suppliers during the EPC phase for plant Owner's consideration. The Owner reviews the priced recommended spare parts lists and decides which spare parts should be procured.

Startup and commissioning spare parts necessary to commission the plant will be the EPC contractor's responsibility during the next phase of the project.

Spare parts are categorized into four classes:

- **Startup/commissioning spare parts** may be required at any time during equipment installation, pre-commissioning, commissioning, startup, and testing.
- **Operating spare parts** are required to maintain continuous operation of the supplied equipment and/or system and to replace those parts and components that fail due to operation. The operating spare parts cover the range of parts required to be on hand and available to effect reliable equipment operation for three years.
- **Capital spare parts** are major parts and equipment components and subsystems required to provide reliable equipment operation throughout the plant life and have a significant lead time for manufacture and delivery. Capital spare parts are major replacement parts or complete units or sets of equipment essential to the continuity of operations. Capital spare parts are considered long-term investments and are not required to be available during the commissioning period. They are acquired outside the B/L on a case-by-case basis based on economic considerations.
- **Special tools** are tools, instruments, devices, human-machine interfaces (HMIs), and software necessary to calibrate, set up, pre-commission, commission, start up, operate, and maintain the equipment within the scope of supply. Special tools do not include items found in a normal maintenance facility.

12.8 Consumables

The major PCC plant consumables are listed in Table 12-1. Not included is a breakdown of minor lubricants (such as for hinges or rollup doors), machining oils, incidental cleaning agents and solvents, rags, fasteners, gaskets, grinding disks, and so on. The values in the table are preliminary pending detailed design after front-end engineering and design (FEED). The types, material specifications, condition specifications, additional requirements and so on are also preliminary pending detailed design after FEED.

Table 12-1

List of Consumables

Description of Consumable	Unit of Measurement	Estimated Consumption Rate	Intermittent/ Continuous	Remarks
Amine Process Solvent	kg/year	1,250,000	Continuous	Makeup for emission losses through makeup metering pump and storage tank
Amine Cartridge Filter Element	each/year	300	Intermittent	Change once every 3–6 months
Nitrogen Gas	Nm^3/hr	85	Continuous	
Caustic Solution (106 G/Mole)	kg per hr	34	6 days per week	When reclaimer is charged
Diesel Fuel	liter/yr	<1000	Intermittent	Backup generator use only; main consumption during monthly testing
Blower Fan Lubricant	liters/yr	<500	Intermittent	
CO_2 Compressor Lubricant	liters/yr	<1000	Intermittent	
Centrifugal Pump Bearing Case Lubricant	liters/yr	<500	Intermittent	
Bearing/Joint Lubrication Grease	kg/month	<10	Intermittent	Several types required
Miscellaneous Lubricant/Grease	kg/month	<1	Intermittent	Several types required
Analyzer Reagents	lot	During detailed design	Intermittent	
Test Lab Reagents	lot	During detailed design	Intermittent	

Chapter 13: Hazards and Safety Analysis

13.1 HAZID

13.1.1 Introduction

This section describes and summarizes the Hazard Identification (HAZID) Study conducted during the FEED phase.

The HAZID is a record of the examination of the hazards associated with the addition of the post-combustion capture (PCC) facility to the natural-gas combined-cycle (NGCC) power plant in Sherman, Texas. The principal objective was to identify, and record potential health, safety, and environmental hazards associated with the design and construction of the PCC facility. The study reviewed a wide range of possible project issues and considered future project phases.

Commercial issues (for example, costs) were not the objective of the HAZID and are excluded from the FEED HAZID study.

The safeguards identified in the HAZID study are based on the design proposed during the FEED stage and served as the front-end input to other risk management and process hazards analysis studies conducted during later stages of the FEED. Recommendations made shall be addressed during the engineering, procurement, and construction (EPC) phase of the project. The team's HAZID findings for the FEED stage are included in the HAZID worksheet (Appendix N).

13.1.2 Team Members

The HAZID team meetings were conducted via video conferencing. The team consisted of Bechtel participants—the project engineer, process engineer, construction manager, power plant systems specialist, and scribe (see Table 13-1).

Table 13-1

HAZID Team Members

Name	Company	Area
Armin Kelly	Bechtel	Construction Manager
Martin Curtis	Bechtel	Process Engineer
Vinay Singh	Bechtel	Project Engineer
John Gulen	Bechtel	Power Plant Systems Specialist
Camila Bauer	Bechtel	Scribe

13.1.3 Scope and Methodology

The objective of the HAZID study is to identify hazards and their respective causes and consequences; it is not the goal of HAZID to solve the problems. The identified actions and recommendations shall be reviewed and resolved during EPC.

The study was conducted by senior personnel on an early revision of the layouts and process scheme. It focused on identifying major issues, particularly those that could

result in significant impact on people or material change affecting the project schedule.

The listed safeguards were identified based on the project design at the FEED stage. Incorporating such safeguards should eliminate or reduce the potential for hazards.

The following systems were addressed in the HAZID study:

- Impact of the existing Sherman NGCC power plant on the proposed post-combustion carbon capture facility
- Impact of the proposed carbon capture facility on the existing Sherman power plant, from the flue gas tie-in (at the heat recovery steam generator [HRSG] stacks) to the PCC plant absorber towers—-including the newly installed diversion duct, water mist injection facilities, and flue gas blowers
- Main carbon capture plant (processing trains from the absorber towers to the CO_2 compression building, bunded tank storage area, and general inside battery limit (ISBL) areas of the carbon capture plant)
- General construction and scheduling issues

The study began with a review of the overall NGCC and PCC plant sites. This included the layout of all major equipment, routing of major utilities, and their segregation rationale.

The PCC plant was divided among five sections listed as nodes next. Each node was reviewed to identify hazards within a specified category, the associated causes, potential consequences, and proposed safeguards. In addition, a general node was incorporated to account for construction and project hazards sitewide that were identified throughout the study.

Nodes:

1. Construction and project hazards sitewide
2. Rich gas processing
3. Flue gas
4. Amine section
5. CO_2 compression and send-out

The following categories of potential hazards were foreseen and considered for each node during the HAZID review:

- External and environmental hazards
- Facility/interface hazards
- Health hazards
- Project implementation issues

13.1.5 Findings

The safeguards identified in the study are those in the design that avoid hazards. If safeguards were considered insufficient to avoid hazards, additional recommendations were made—these are to be addressed during detailed engineering of the EPC phase. The recommendations are included in the HAZID worksheet (Appendix N). Examples of the hazards identified in the HAZID worksheet are provided in Table 13-2.

Table 13-2

Examples of HAZID Findings

Hazard	Cause	Consequences	Safeguards	Recommendations
Tornadoes and Lightning Node: 1	Extreme weather conditions	1. Personnel injury 2. Possible damage to equipment	1. Site emergency response and evacuation 2. Early warning system 3. Shelters	Establish adequate shelters on-site for both construction and operational phases
Construction Impact on Operating Power Plant Node: 1	Mechanical/electrical tie-ins to plant etc.	Impact on power plant operation	Construction strategy review with owner	Schedule tie-ins with Panda, the power plant owner
Construction Near Existing Buildings (control room, STG electrical room) Node: 3	Duct routing	Construction above/near buildings with personnel	Safety measures during construction	Discuss lifting of steel/ducting around control room and STG electrical room with Sherman plant
Proximity of Capture Plant Control Building from Compressor Node: 5	Compressor or pipe rupture	Asphyxiation due to CO_2 in control building	Compressors located within own building; therefore, CO_2 will be contained	Provide adequate distance between control room and compressor building to avoid hazard
CO_2 Release from Ruptured Pipeline Node: 5	Pipe failure	Pipeline damage and emergency shutdown	Pipe design	1. Identify location of CO_2 pipeline failure and plant response 2. Review compressor shutdown and hydraulic shock during design

13.2 HAZOP

13.2.1 Introduction

This section describes and summarizes the process hazard analysis (PHA) conducted as a hazard and operability study (HAZOP) for the PCC plant retrofit to an NGCC power plant in Sherman, Texas. The HAZOP study was conducted to identify any deviations within the project design that could result in unsafe operating conditions or unexpected operational difficulties. The facilitator for the meetings was a process safety engineer from Bechtel's oil, gas, and chemicals (OG&C) business unit.

The HAZOP team meetings were conducted via video conferencing. The HAZOP review team consisted of Bechtel participants—the HAZOP facilitator, project engineer, process consultant, process engineer, manager of startup, and two scribes. The team reviewed prior to and during the workshop all documents listed later in Table 13-9. The piping and instrument diagrams (P&IDs) are included in Appendix A and process flow diagrams (PFDs) in Chapter 3. The HAZOP findings worksheets are included in Appendix O. The description of each node is contained in Table 13-3. Associated PFDs displaying streams considered for each node are shown in Figure 13-1 at the end of this chapter.

13.2.2 HAZOP Methodology

HAZOP is a structured form of analysis that provides a systematic evaluation of the potential hazards associated with the specific process as well as operational issues that could, for instance, affect the power and/or carbon capture plant(s). Microsoft Excel® was used to record the HAZOP study results presented in this report.

In the HAZOP study methodology, questions are asked regarding the changes/deviations to the process parameters to examine consequences from a design intent perspective at selected locations in the process flow.

For this study, the operating mode addressed was normal operation. In addition, startup/shutdown and abnormal operation issues were considered as deviations within each node. The team's comments were recorded within each deviation as agreed upon by the team. When recommendations resulted from these discussions, they were noted on the worksheet as actions that need to be revisited during detailed design.

Worksheet

The worksheet developed for recording HAZOP findings was displayed on a monitor during the review. **Deviations** were chosen by the team, and any condition, function, malfunction, or operation that could cause the deviation being examined was noted in the **Cause** column. The **Consequences** column was used to record the resulting worst-case consequences from each cause if no safeguards were in place. If system safeguards were included in the design—such as instrumentation, alarms, shutdowns, relief valves, or operator action, which could mitigate the situation (consequences)—these were entered in the **Safeguards** columns of the worksheet. If the available safeguards were not sufficient to protect the plant from the identified consequences, the team decided that a change was warranted to improve safety or operability, and recommendations were noted in the **Recommendations** column for a revisit during the detailed design of the EPC phase. These changes could be in hardware, instrumentation, controls, or operating procedures. The HAZOP worksheet serves as a record of the sessions.

Nodes

The first step in the HAZOP study is to select defined areas, called *nodes*, where the process deviations are to be examined. The HAZOP facilitator reviewed the P&IDs and selected the nodes to be considered. The nodes identified by the HAZOP facilitator were systematically reviewed by the HAZOP team during the team meetings. The configuration of each node was flexible, allowing the facilitator/team to vary the size of a node according to process complexity. The nodes were numbered for record keeping and are recorded on the header of each HAZOP worksheet. These nodes are listed in Table 13-3.

Table 13-3

List of Nodes and Node Intents

Node	Node Intent	PFDs 26301-000-M5-	P&IDs 26301-000-M6-
Node 1: Flue Gas System from Flue Stack to the Absorber	To blow flue gas toward the absorber, cool it with fogging water, remove the CO_2 with an amine solution, and water wash to remove entrained amine in the flue gas prior to discharge to atmosphere.	BA-00001, CN-00001/2	BA-00001/2/3, CN-00010/20/30
Node 2: Rich Amine from Bottom of CO_2 Absorber, T-101, to the Stripper T-103, included	To recover energy from the lean amine exiting the stripper. Use LP steam in reboiler to heat rich amine. Separate CO_2 from rich amine and condense the resulting steam in the overhead condenser.	CN-00001/2/3/5	CN-00010/40/81/120/130/140/150
Node 3: Semi-Lean Amine from Lean Amine Cooler, ME-102, to the Absorber	To use energy recovered from compression section to heat and flash a rich amine side stream. Semi-lean amine returned to the absorber; flashed CO_2 and associated vapor sent to stripper.	CN-00003/4/5/1/2	CN-000040/85/100/110/10/120
Node 4: Lean Amine from Stripper Bottoms	Lean amine flow to the absorber via rich amine HX. Small side stream to reclaimer.	CN-00005/4/3/1/2	CN-00120/170/100/81/80/10
Node 5: CO_2 Compression and Drying	To compress CO_2 from top of stripper to dense phase and dry it to comply to pipeline specification before pumping into pipeline	CN-00005, QG-00001/2	CN-00140, QG-00010/20/30/40/50/60/70/80/90/100/110/ 120
Node 6: General	To cover the entire CCU plant.	All drawings	All drawings

Guidewords/Deviations

In the HAZOP methodology, guidewords are combined with process parameters to examine deviations from design intent within each node. Process parameters include flow, temperature, pressure, and level. Examples of guidewords used include no, low, high, and reverse. An example of the type of deviation generated by this structure would be “high flow.” For each credible deviation identified, the team discussed the causes, consequences, and existing system safeguards for that deviation. If appropriate, a recommendation was made to change the system design or operating procedures. In some cases, further study is required; this is also included as a recommended follow-up action.

Cause

A condition, function, malfunction, or operation that could cause the deviation being examined was noted as a cause in the HAZOP worksheets. To avoid repetition,

similar causes resulting in the same deviation were considered only as a single cause. For instance, if a valve fails open or closed, either the valve or its associated safeguards such as alarms, transmitters, or controls are considered to have failed as well; therefore, independent protection layers are recommended for consideration in the detailed engineering phase to mitigate the hazard.

Causes are generally assumed to originate within the node being analyzed. For any one deviation, there may be multiple causes.

Consequences

For each cause evaluated, the resulting consequences were recorded. Consequences included any unintended or undesirable condition that arose from the deviation being considered. Consequences were recorded in the worksheets before system safeguards were evaluated and were not influenced by the safeguards. The consequences of the cause being analyzed may be found inside or outside the node.

Safeguards

If existing system features such as instrumentation, alarms/shutdowns, relief valves, or operator action could help mitigate the situation (the consequences) or reduce its frequency, these were entered in the Safeguards column on the HAZOP worksheets. Safeguards are something that could either prevent or mitigate the consequences listed by the team.

Risk Ranking

Each deviation developed in the study was risk-ranked according to the risk matrix presented in Table 13-4. The consequence severity of the scenario was ranked without considering any safeguards. The likelihood (frequency) of the scenario was determined after all safeguards were considered.

Table 13-4

Risk Matrix Used for HAZOP

CONSEQUENCE CATEGORY			CONSEQUENCE / IMPACT						NOTES:
Safety/Health (impact on work force)			Single first aid	Serious Injury – temporary	Disabling Injury – permanent	1-2 fatalities or multiple personnel disabilities	3 - 10 fatalities	> 10 fatalities	Numbers in the matrix indicate the number of required IPLs to reduce risk to acceptable levels.
Safety/Health (impact on public)			No impact	Single first aid	Severe Injury – temporary	Disabling Injury - permanent	1-2 fatalities or multiple disabilities	≥ 3 fatalities	When IPLs = 0 there is no need for additional IPLs if safeguards are reasonable and operator has a functional safety management system in place.
Environmental (impact to the natural environment)			No impact	Minor impact, fully contained, readily mitigated.	Short term impact, confined to site	Significant impact but contained on site	Severe – offsite impact; media interest	Long term offsite impact; significant media interest	
Property Damage/Financial loss			< $ 100,000	$100,000 to $1million	$1 million to $10million	$10 million to $100 million	$100million to $1billion	> $1 billion	
LIKELIHOOD		Annual Frequency	(1) NEGLIGIBLE	(2) MINOR	(3) MODERATE	(4) MAJOR	(5) SEVERE	(6) CATASTROPHIC	
(F) FREQUENT	Expected to occur several times within the facility lifetime.	10^{-1}	IPLs =0	IPLs =1	IPLs =2	IPLs =3	IPLs =4	Not Acceptable	
(E) OCCASIONAL	Expected to occur once or twice during the facility lifetime.	10^{-2}	IPLs =0	IPLs =0	IPLs =1	IPLs =2	IPLs =3	IPLs =4	
(D) POSSIBLE	Might occur once in ten similar facility lifetimes	10^{-3}	IPLs =0	IPLs =0	IPLs =0	IPLs =1	IPLs =2	IPLs =3	
(C) UNLIKELY	Known to have occurred, but unlikely within ten facility lifetimes.	10^{-4}	IPLs =0	IPLs =0	IPLs =0	IPLs =0	IPLs =1	IPLs =2	
(B) VERY UNLIKELY	Similar event has occurred in OG&C industry.	10^{-5}	IPLs =0	IPLs =0	IPLs =0	IPLs =0	IPLs =0	IPLs =1	
(A) RARE	Has not yet occurred in OG&C industry	10^{-6}	IPLs =0	IPLs =0	IPLs =0	IPLs =0	IPLs =0	IPLs =0	

Recommendations

If the team decided that a change was warranted to improve safety or operability, those actions and/or recommendations were noted in the Recommendations column of the worksheets. Changes could be recommended for hardware, instrumentation, controls, alarms, operating procedures, or additional studies.

13.2.3 Team Members

Members of the HAZOP team are listed in Table 13-5 and in the attendance log shown in Table 13-6.

Table 13-5

HAZOP Team Members

Name	Company	Area
Antonino Nicotra	Bechtel	Facilitator/Process Safety Engineer
Martin Curtis	Bechtel	Process Engineer
August Benz	Bechtel	Process Consultant
Vinay Singh	Bechtel	Project Engineer
Joseph Diaz	Bechtel	Manager of Startup
Camila Bauer	Bechtel	Scribe
Kameron Flournoy	Bechtel	Scribe

Table 13-6

HAZOP Team Members Attendance

Name	Nov 16	Nov 17	Nov 18	Nov 19	Nov 20	Nov 23
Antonino Nicotra	✓	✓	✓	✓	✓	✓
Martin Curtis	✓	✓	✓	✓	✓	✓
August Benz	✓	✓	✓	✓	✓	✓
Vinay Singh	✓	✓	✓	✓	✓	✓
Joseph Diaz	✓	✓	✓	✓	✓	✓
Camila Bauer	✓	✓	✓	✓	✓	✓
Kameron Flournoy	✓	✓	✓	✓	✓	✓

13.2.4 HAZOP Worksheet Interpretation

The list of nodes selected for analysis is shown in Table 13-3, and the abbreviations used in the study are in Table 13-7. For each scenario, different causes were discussed, the resulting consequences and safeguards recorded, and recommendations developed as needed. Considering all nodes, the scenarios identified as the most concerning are shown later in Table 13-8. The nodes are marked with distinct colors in the Process Flow Diagrams in Figure 13-1.

Table 13-7

Abbreviations

Abbreviations	Definitions
barg	Bar Gauge
BFW	Boiler Feedwater
CCU	Carbon Capture and Utilization
DCS	Distributed Control System
ESD	Emergency Shutdown
GTG	Gas Turbine Generator
H (H/HH/HHH)	High
HX	Heat Exchanger
HRSG	Heat Recovery Steam Generator
HSS	Heat Stable Salts
IPL	Independent Protection Layer
Max.	Maximum
OG&C	Oil, Gas, and Chemicals
PI	Pressure Indicator
PP	Power Plant
PT	Pressure Transmitter
PIC	Pressure Indicating Controller
PSH/PSHH or PAH/PAHH	High-Pressure Switch or High-Pressure Alarm
PSL/PSLL or PAL/PALL	Low-Pressure Switch or Low-Pressure Alarm
PSV	Pressure Safety Valve
PSD	Process Shutdown
TI	Temperature Indicator
TIC	Temperature Indicating Controller

TSH/TSHH or TAH/TAHH	High-Temperature Switch or High-Temperature Alarm
TSL or TAL/TALL	Low-Temperature Switch or Low-Temperature Alarm
FI	Flow Indicator
FIC	Flow Indicating Controller
FSL/FSLL or FAL/FALL	Low-Flow Switch or Low-Flow Alarm
L (L/LL/LLL)	Low
LI	Level Indicator
LP	Low Pressure
LT	Level Transmitter
LSH/LSHH or LAH/LAHH	Low-Level Switch or Low-Level Alarm
S/D	Shut Down
FC	Fail Closed
FO	Fail Open

When reading the worksheets, the generic scenarios that could cause a deviation were not detailed in the worksheet. For example, when a "No Flow" scenario was examined, the reason for it (for example, pump failure or valve closure) was not listed.

13.2.5 HAZOP Risk Ranking

To determine the risk rankings for each entry, as noted on the HAZOP worksheets, the HAZOP team followed these steps:

1. A severity was assigned to the defined consequences, without considering safeguards. Severity was assigned one of the six levels (catastrophic, severe, major, moderate, minor, or negligible) for each of the three potentially impacted categories: safety (both to plant personnel and the public), environment, and financial/asset damage (plant equipment and downtime).
2. The frequency or likelihood of occurrence was assigned, including consideration of the initiating deviation and how the identified safeguards would reduce the likelihood. Frequency was assigned one of six levels (frequent, occasional, possible unlikely, very unlikely, or rare).
3. The risk ranking was developed using the risk assessment matrix provided in Table 13-4.

13.2.6 HAZOP Top Risk Findings

The most concerning findings were recognized as the scenarios that presented a hazard even after considering their safeguards. The top risk rating corresponded to the orange or red zones seen in the risk matrix in Table 13-4. In this study, the top risk scenarios threatened the categories of Property, Environment, or Safety; some of the major findings are listed in Table 13-8. For the majority of high-risk scenarios, the EPC contractor will be responsible for conducting a thorough HAZOP after detailed engineering while considering the hazards recognized during FEED stage.

Table 13-8

Top Risk Identified HAZOP Scenarios

Deviation	Cause	Consequence	Safeguards	Mitigated Risk Ranking (RR)	Comments	Recommendations
NODE 1: No/Less Flow	1-BA-MD-900 fails close or FD912 fails close [Dampers at HRSG fail closed]	No flow of flue gas from HRSG will upset and damage the gas turbine, possibly leading to loss of containment. Potential fatalities. No flow into blowers might create vacuum in the ductwork and potential collapse.	Gas turbine is protected by HP exhaust gas trip. PI902C with H and L pressure alarms. LLL pressure in duct from HRSG will trip the blower.	E3 [Property]	There will be a change in the logic to add interlock to flue gas dampers to prohibit the startup of the turbine. The flow to T-102 is monitored by delta FI0058. Add L, LL, and LLL to PI0006A/B to M6-BA-00001.	Add a trip to the turbine in case all dampers are closed. Consider the need for a low-flow alarm in this section. Consider NFPA85 requirements for HRSG protection.
NODE 5: No/Less Flow	LV0704 fails close [H_2O knockout drum drain]	Builds up liquid level in MV-203 leading to carry over to the compressor. Potential	None identified.	E4 [Safety]		Consider designing the level protection for MV-203 with additional IPLs

		compressor damage and fatalities via rotor failure and ejecting high-velocity metal fragments through compressor casing.				and therefore shut down the compressor from the ESD system. This recommendation applies to all CO_2 compression suction drums.

Table 13-8 (continued)

Top Risk Identified HAZOP Scenarios

Deviation	Cause	Consequence	Safeguards	Mitigated Risk Ranking (RR)	Comments	Recommendations
NODE 5: Higher Pressure	Blocked compressor outlet due to failure of HV2516 fully closed or any valve downstream closed	Pressure of CO_2 stream will increase, leading to potential compressor and/or pipe rupture, CO_2 release, fatalities, and environmental impact. Third-stage steam generator will run dry, pressure in surge drum will decrease, CO_2 phase will change into liquid and vapor leading to cavitation in pump suction MP-108A/B, pump damage, and release of CO_2 to atmosphere, fatalities, and environmental impact.	H pressure alarm on PI2506. Anti-surge will protect the compressor.	F4 [Safety]		Consider reviewing the location of HV2516 with regard to the nearest location of PSVs to protect against this scenario.
NODE 5: Higher Pressure	Tube rupture in ME-116 and/or ME-117	High-pressure CO_2 entering the cooling water or BFW HXs can lead to pipe rupture with release	PSV0906 on ME-116 set at 86 barg.	D4 [Safety]		Consider transient analysis in CW and BFW systems to assess lower pressure and

	[HXs transferring heat from high-pressure CO_2]	of CO_2 to the atmosphere and potential fatalities.	PSV0909 on cooling water return [WL-00003].			adequate piping pressure and support. Recommendation applies to all similar heat exchangers.
NODE 5: Lower Level	LV0704 failing fully open [CO_2 escape via waste drains]	Potentially drain the drum empty to floor drain causing CO_2 to enter the wastewater sump and be released to atmosphere, resulting in potential fatalities and environmental impact.	None identified.	E4 [Safety]		Consider designing the level protection for MV-203 with additional IPLs and therefore shut down the compressor from the ESD system. This recommendation applies to all CO_2 compression suction drums.

13.2.7 Document List

Table 13-9

Document List for FEED HAZOP Study

Document #	Title	Rev.
N/A	Process Description	0
26301-000-M5-BA-00001	Process Flow Diagram - Blower and Quench Section	1
26301-000-M5-CN-00001	Process Flow Diagram - Absorber T-101	0
26301-000-M5-CN-00002	Process Flow Diagram - Absorber T-102	0
26301-000-M5-CN-00003	Process Flow Diagram - Lean Amine Cooling Sheet 1 of 2	0
26301-000-M5-CN-00004	Process Flow Diagram - Lean Amine Cooling Sheet 2 of 2	0
26301-000-M5-CN-00005	Process Flow Diagram - Stripper	0
26301-000-M5-CN-00006	Process Flow Diagram - Amine Reclaimer	1
26301-000-M5-CY-00001	Process Flow Diagram - Fresh and Lean Amine Storage	0
26301-000-M5-QG-00001	Process Flow Diagram - Compression & Drying Section - Sheet 1 of 2	0
26301-000-M5-QG-00002	Process Flow Diagram - Compression & Drying Section - Sheet 2 of 2	0
26301-000-M5-SC-00001	Process Flow Diagram Condensate, Steam, and BFW Water Distribution Systems	0
26301-000-M5-WL-00001	Process Flow Diagram - Cooling Water System	0
26301-000-M5J-YA-00001	PFD Symbols and Legends	0
26301-000-M6-AB-00001	Piping & Instrument Diagram LP Steam System	0
26301-000-M6-AB-00002	Piping & Instrument Diagram LP Steam System	0
26301-000-M6-AB-00003	Piping & Instrument Diagram MP Steam System	0
26301-000-M6-AB-00004	Piping & Instrument Diagram LP Steam Supply to CC	0
26301-000-M6-AB-00005	Piping & Instrument Diagram MP Steam Supply to CC	0
26301-000-M6-BA-00001	Piping & Instrument Diagram Flue Gas System	0
26301-000-M6-BA-00002	Piping & Instrument Diagram Flue Gas System	0
26301-000-M6-BA-00003	Piping & Instrument Diagram Flue Gas System	0
26301-000-M6-CN-00010	Piping & Instrument Diagram CO_2 Absorber T-101 (Amine Section)	0
26301-000-M6-CN-00020	Piping & Instrument Diagram CO2 Absorber T-101 (Wash Water Cooling Section)	0
26301-000-M6-CN-00030	Piping & Instrument Diagram Absorber 1 Wash Water Cooling System	0
26301-000-M6-CN-00040	Piping & Instrument Diagram Absorber 1 Rich Amine Pumps	0

26301-000-M6-CN-00080	Piping & Instrument Diagram Lean Amine Cooling System	0
26301-000-M6-CN-00081	Piping & Instrument Diagram Lean Amine/Rich Amine Heat Exchangers	0
26301-000-M6-CN-00085	Piping & Instrument Diagram Semi-Lean Amine/Rich Amine Heat Exchanger	0
26301-000-M6-CN-00100	Piping & Instrument Diagram Flash Feed Heaters	0
26301-000-M6-CN-00110	Piping & Instrument Diagram Semi-Lean Amine Flash System	0
26301-000-M6-CN-00120	Piping & Instrument Diagram Amine Stripper (Packed Section)	0
26301-000-M6-CN-00130	Piping & Instrument Diagram Amine Stripper (Trayed Section)	0

Table 13-9 (continued)

Document List for FEED HAZOP Study

Document #	Title	Rev.
26301-000-M6-CN-00140	Piping & Instrument Diagram Amine Stripper (Reflux Section)	0
26301-000-M6-CN-00150	Piping & Instrument Diagram Stripper Reboilers	0
26301-000-M6-CN-00170	Piping & Instrument Diagram Lean Amine Pump	0
26301-000-M6-CN-00180	Piping & Instrument Diagram Amine Reclaimer	0
26301-000-M6-CN-00190	Piping & Instrument Diagram Reclaimer Chemical FEED Package	0
26301-000-M6-CY-00010	Piping & Instrument Diagram Rich and Lean Amine Storage	0
26301-000-M6-PA-00001	Piping & Instrument Diagram Compressed Air System	0
26301-000-M6-PA-00002	Piping & Instrument Diagram Compressed Air System	0
26301-000-M6-PF-00001	Piping & Instrument Diagram Fire Protection System	0
26301-000-M6-PG-00001	Piping & Instrument Diagram Nitrogen Gas System	0
26301-000-M6-PW-00001	Piping & Instrument Diagram Potable Water System	0
26301-000-M6-QG-00010	Piping & Instrument Diagram CO_2 Compressor Suction Drum	0
26301-000-M6-QG-00020	Piping & Instrument Diagram CO_2 Compressor 1st Stage	0
26301-000-M6-QG-00030	Piping & Instrument Diagram CO_2 Compressor 1st Stage Steam Generator & Intercooler	0
26301-000-M6-QG-00040	Piping & Instrument Diagram CO_2 Compressor 1st Stage Interstage Knock-Out Drum	0
26301-000-M6-QG-00050	Piping & Instrument Diagram CO_2 Compressor 2nd Stage	0
26301-000-M6-QG-00060	Piping & Instrument Diagram CO_2 Compressor 2nd Stage Steam Generator & Intercooler	0

26301-000-M6-QG-00070	Piping & Instrument Diagram CO_2 Compressor 2nd Stage Interstage Knock-Out Drum	0
26301-000-M6-QG-00080	Piping & Instrument Diagram CO_2 Drying Package	0
26301-000-M6-QG-00090	Piping & Instrument Diagram CO_2 Compressor 3rd Stage Interstage	0
26301-000-M6-QG-00100	Piping & Instrument Diagram CO_2 Compressor 3rd Stage Steam Generator & Intercooler	0
26301-000-M6-QG-00110	Piping & Instrument Diagram CO_2 Surge Drum & Product Send-Out Pump	0
25474-000-M6-QG-00120	Piping & Instrument Diagram CO_2 Cooler and Export Pipeline	0
26301-000-M6-SC-00001	Piping & Instrument Diagram LP Condensate System	0
26301-000-M6-WL-00002	Piping & Instrument Diagram Cooling Water Supply System	0
26301-000-M6-WL-00003	Piping & Instrument Diagram Cooling Water Return System	0
26301-000-M6-WP-00010	Piping & Instrument Diagram Absorber Makeup Water Pumps	0
26301-000-M6-WR-00001	Piping & Instrument Diagram Raw Water System	0
26301-000-M6-XW-00001	Piping & Instrument Diagram Amine Waste System	0
26301-000-M6-XW-00002	Piping & Instrument Diagram Wastewater System	0
26301-000-M6-XW-00003	Piping & Instrument Diagram Waste Spray Water System	0

Table 13-9 (continued)

Document List for FEED HAZOP Study

Document #	Title	Rev.
26301-000-M6J-YA-00001	Piping & Instrument Diagram Symbols and Legends	0
26301-000-M6J-YA-00002	Piping & Instrument Diagram Symbols and Legends	0
26301-000-M6J-YA-00003	Piping & Instrument Diagram Symbols and Legends	0
26301-000-M6J-YA-00004	Piping & Instrument Diagram Symbols and Legends	0
26301-000-M6J-YA-00005	Piping & Instrument Diagram Symbols and Legends	0
26301-000-J4-JD-00001	Cause & Effect Diagram	0

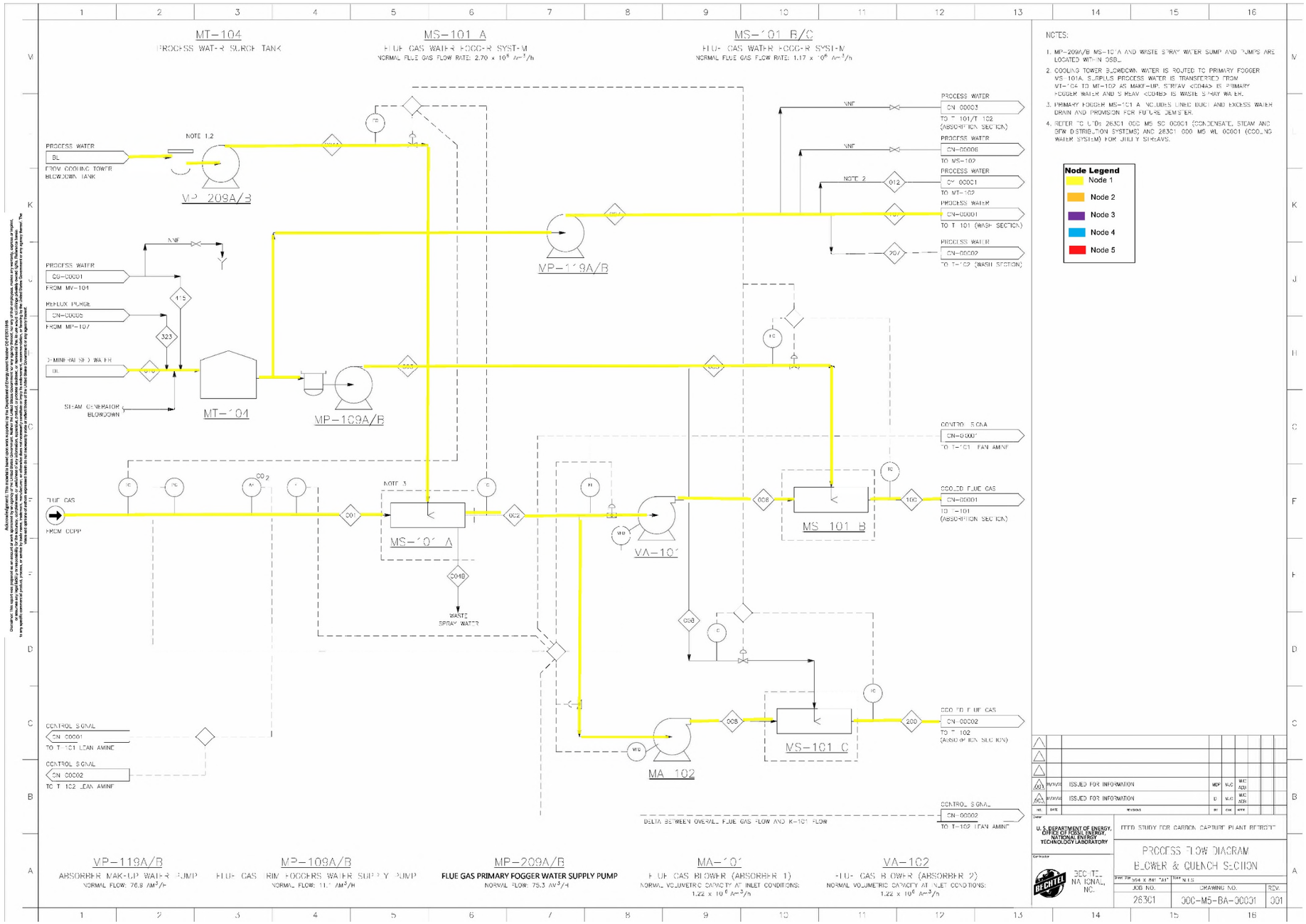

Figure 13-1

PFDs: Markup of Nodes: Blower /Quench Section

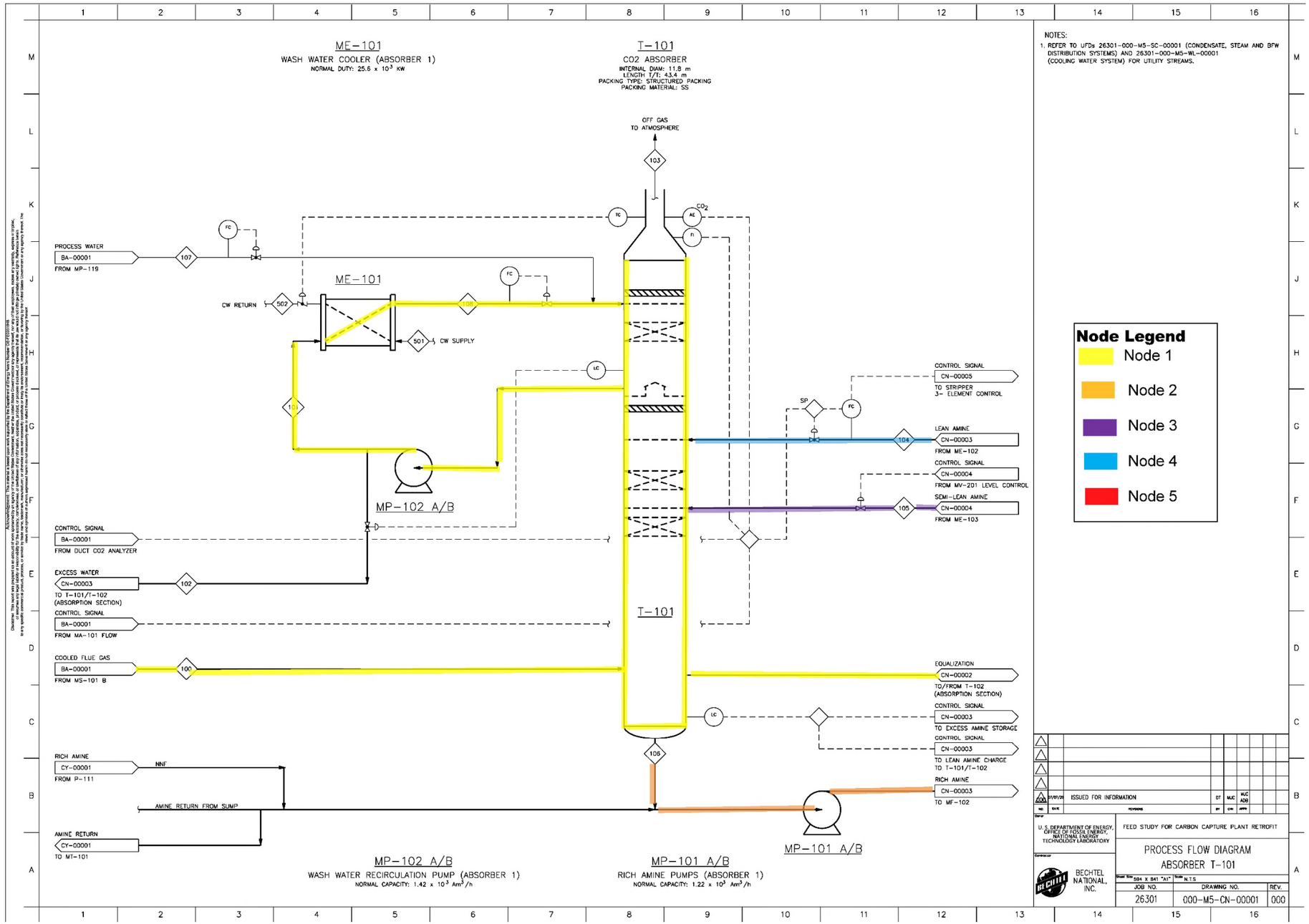

Figure 13-2

PFDs: Markup of Nodes: Absorber Section 1

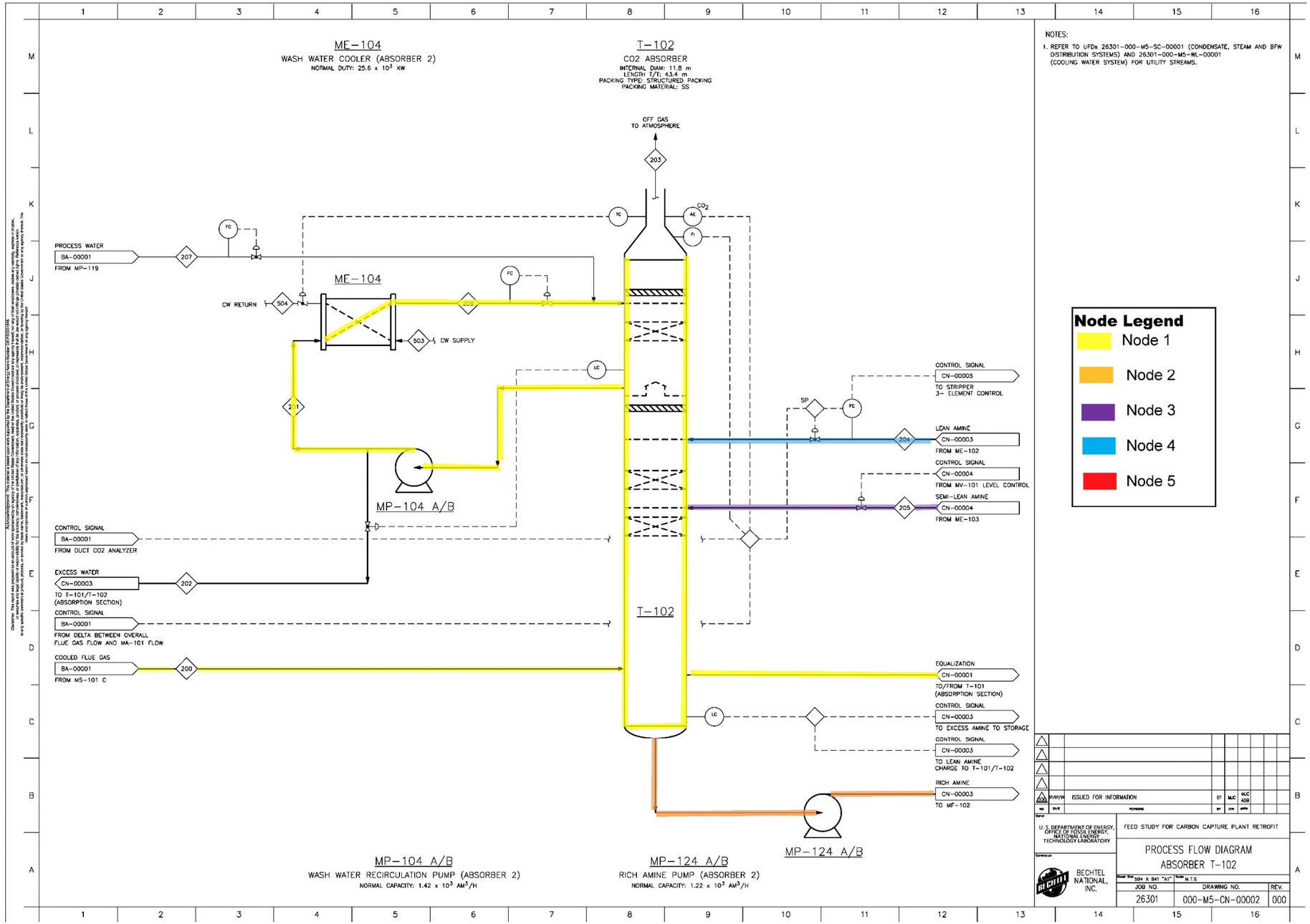

Figure 13-3

PFDs: Markup of Nodes: Absorber Section 2

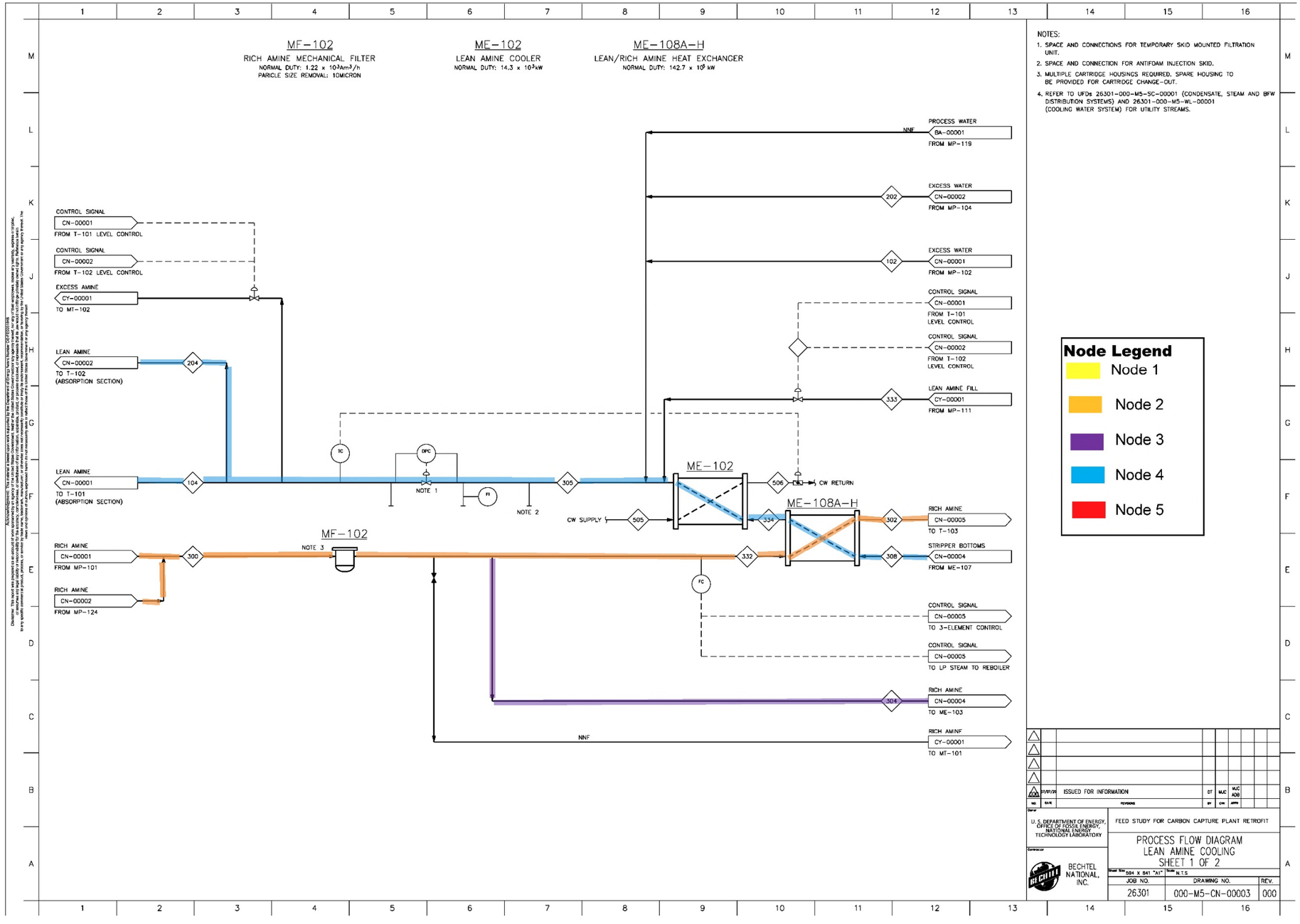

Figure 13-4

PFDs: Markup of Nodes: Lean Amine Cooling 1

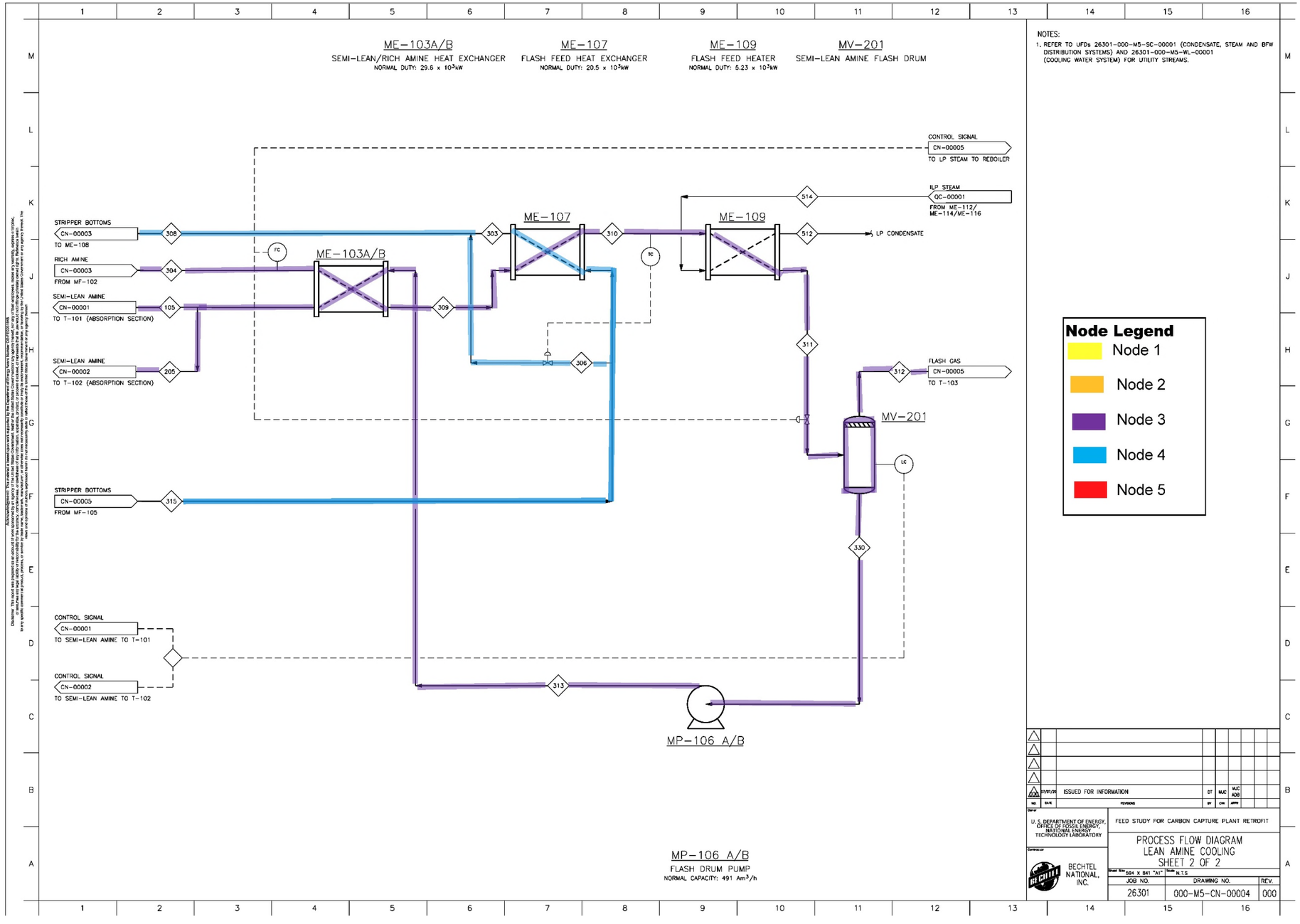

Figure 13-5

PFDs: Markup of Nodes: Lean Amine Cooling 2

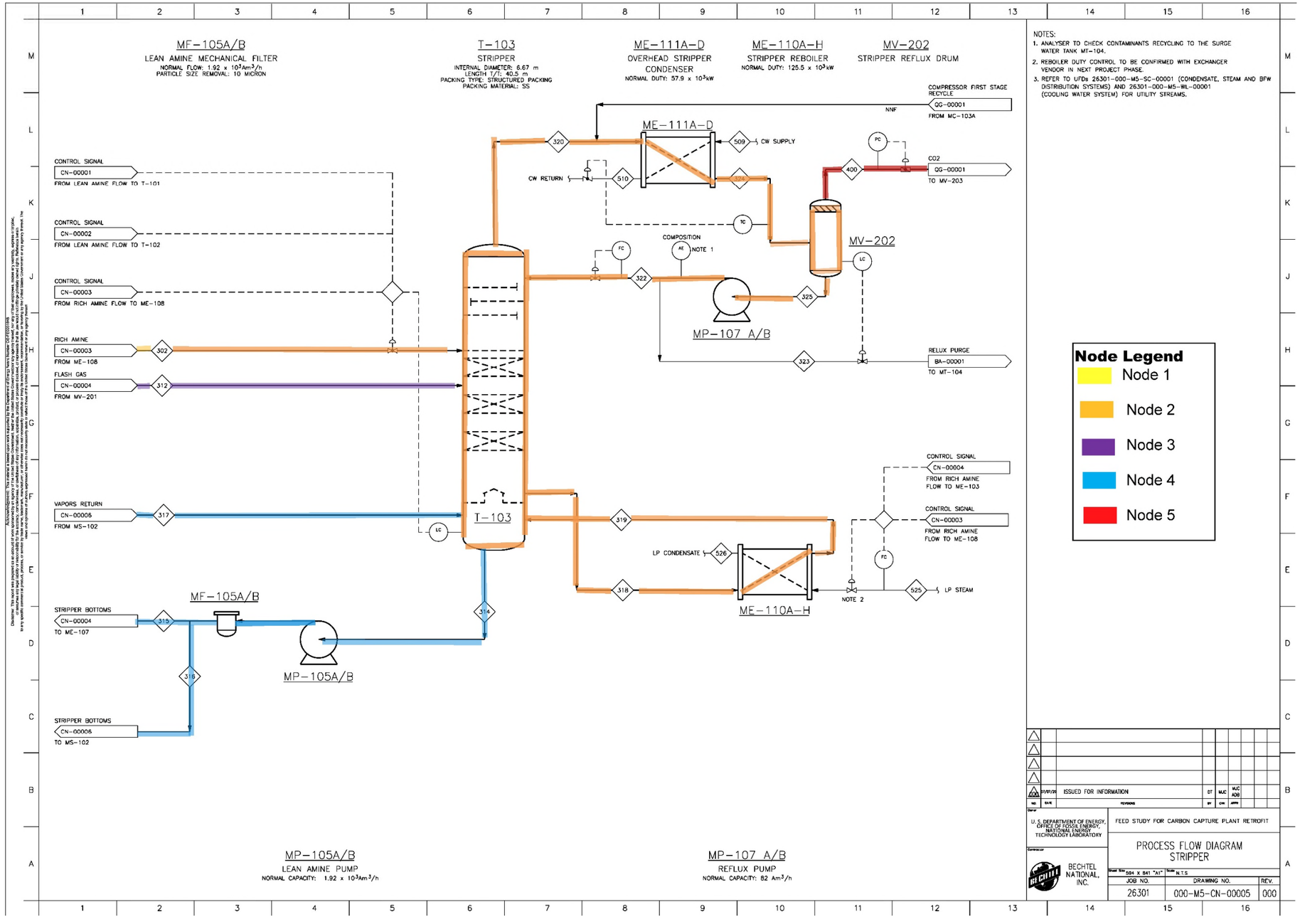

Figure 13-6

PFDs: Markup of Nodes: Amine Stripper

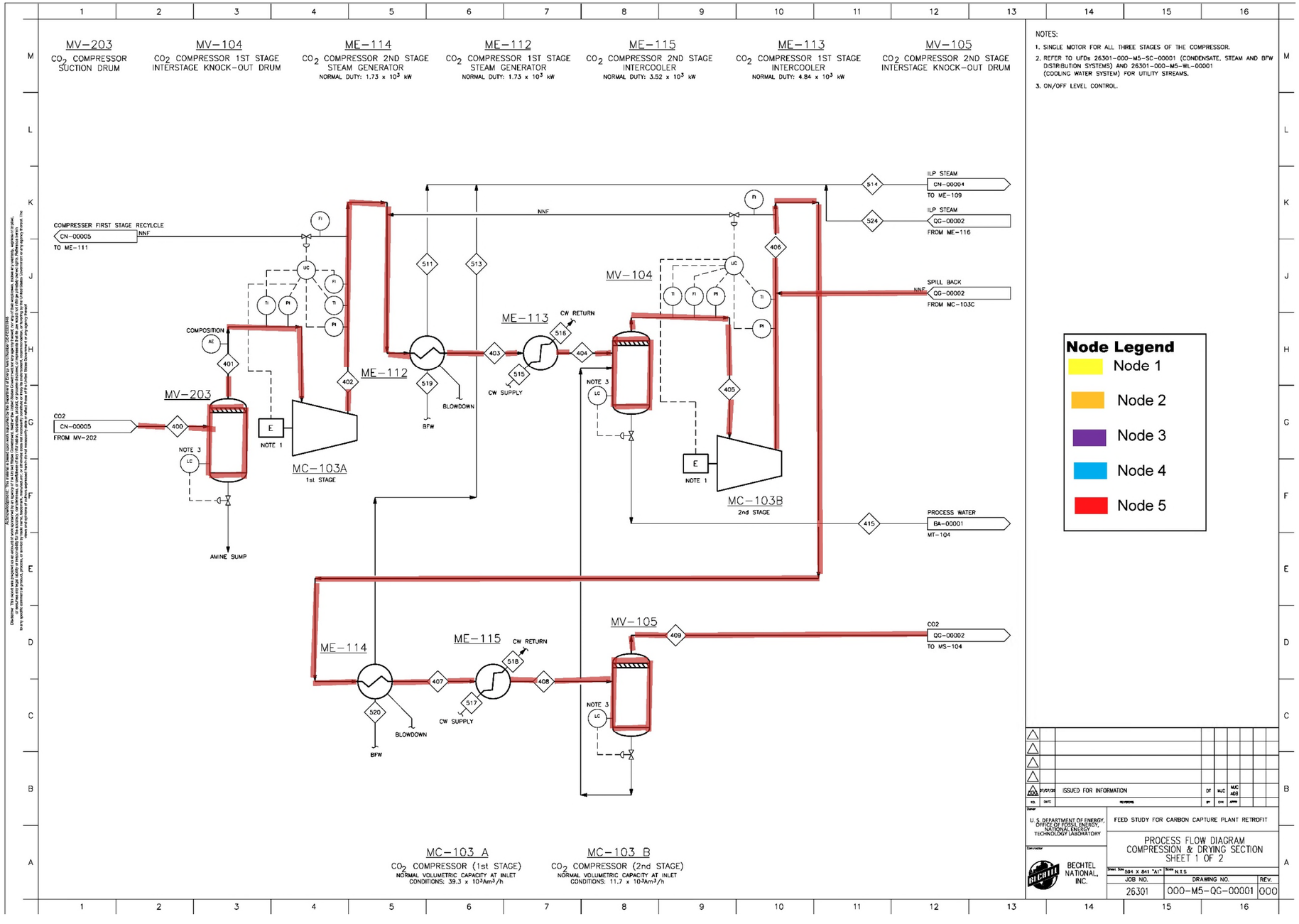

Figure 13-7

PFDs: Markup of Nodes: Amine Reclaimer

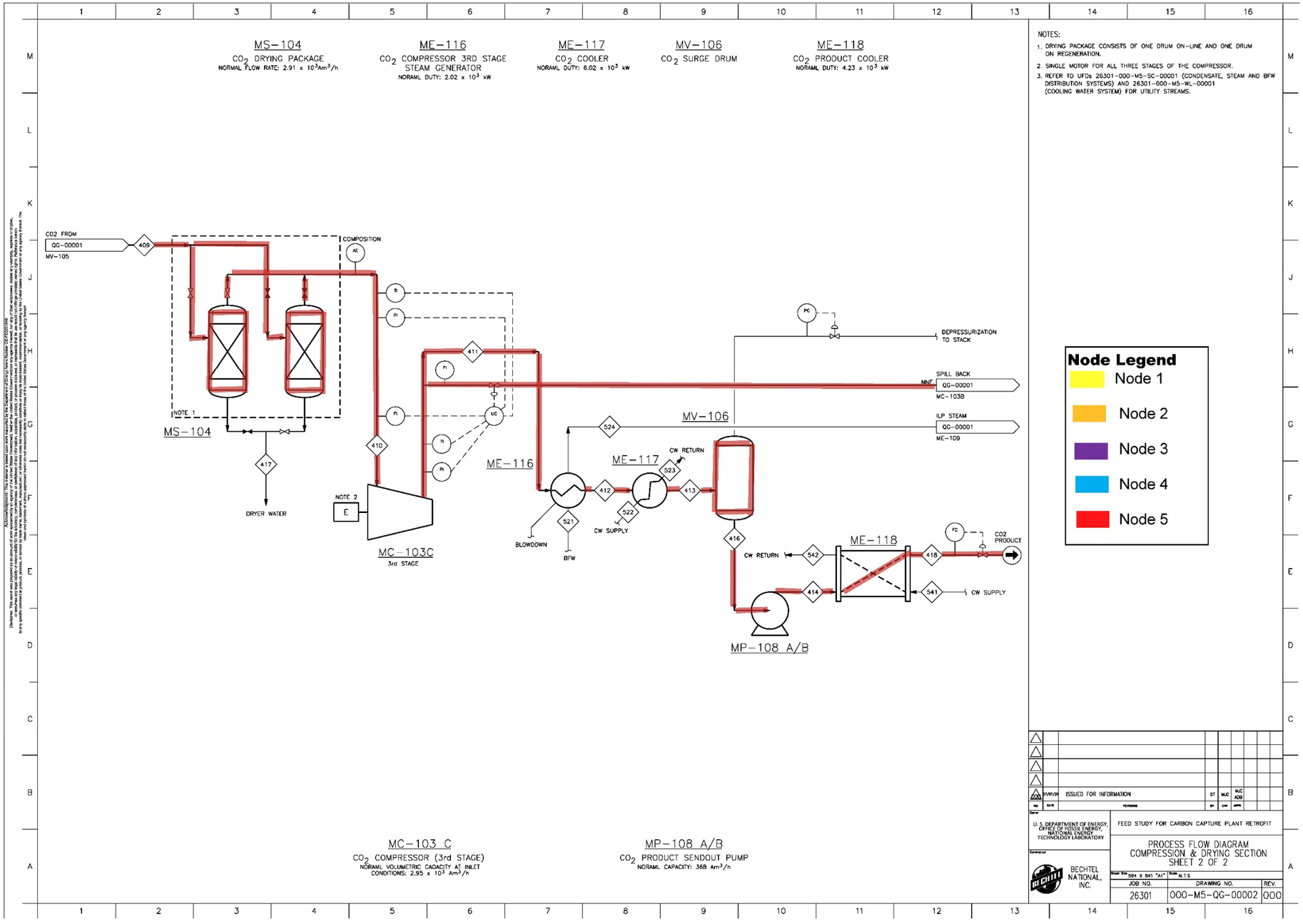

Figure 13-8

PFDs: Markup of Nodes: Compression and Drying 1

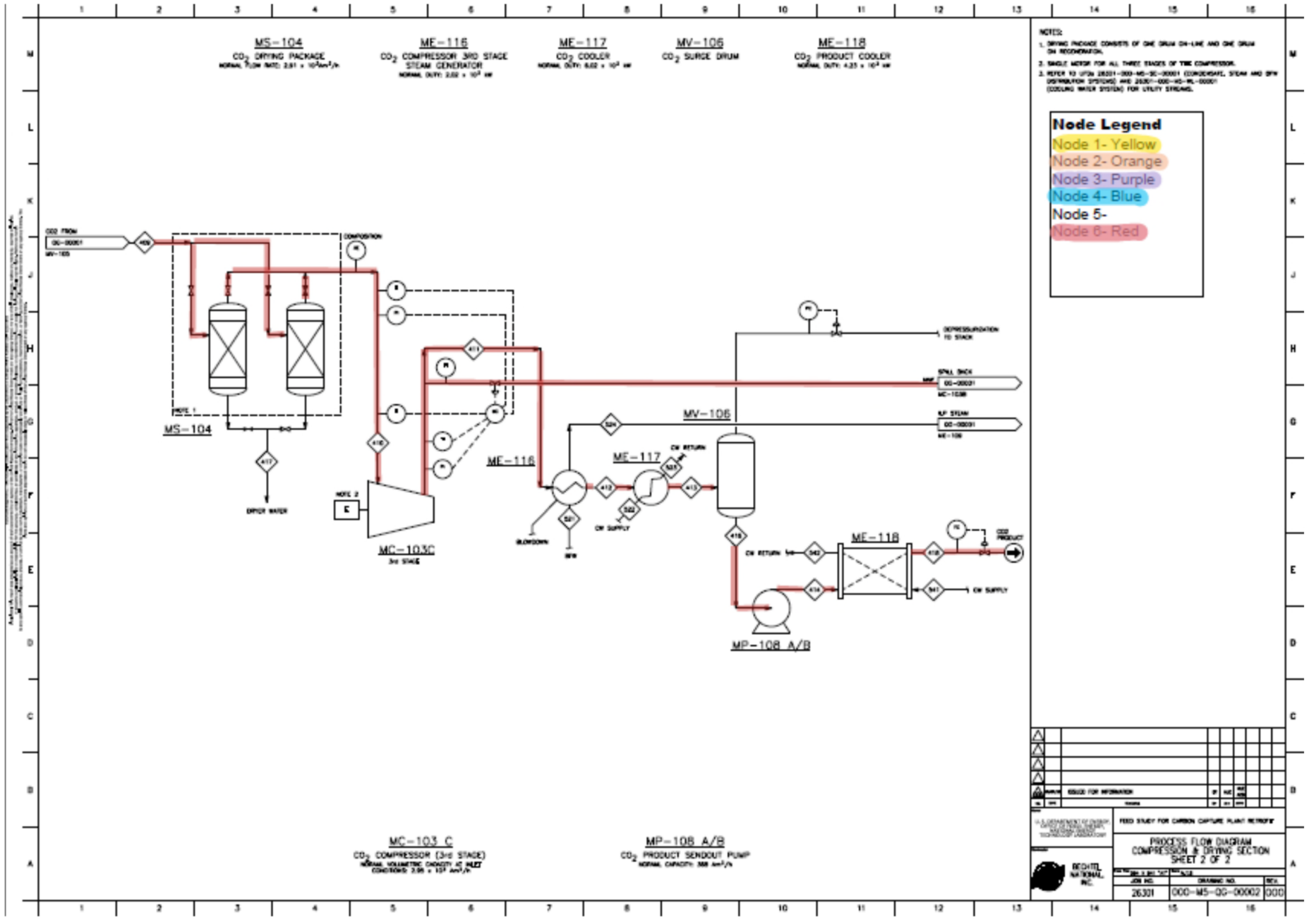

Figure 13-9

PFDs: Markup of Nodes: Compression and Drying 2

Chapter 14: Risk Management

14.1 Purpose

The section outlines all identified risks related to engineering, technology, manufacturing, supply, assembly, erection, commissioning, testing, and operation phases of the PCC project. In addition, it outlines measures to prevent/mitigate those risks.

The risk analysis relates to risks for the FEED phase, the EPC phase, and the final operation phase of the PCC plant. The knowledge of risk will increase during the development of the design from the FEED stage into EPC, and the risks listed in this chapter should be updated accordingly.

14.2 Approach

The approach taken for risk management was to identify as many risks as possible. In some cases, the actual impact of the risk could not be fully assessed and will likely be known only during further design development in the EPC stage. In other cases, the suggested mitigation measures are preliminary and based on the information available during the FEED study.

At the time of issue of this report, the following risk categories were identified:

- Engineering
- Technology
- Procurement
- Manufacturing
- Transportation
- Permits and environmental
- Construction
- Commissioning and testing
- Schedule
- Project finance
- CAPEX
- OPEX
- CO_2 capture cost

The risks and mitigation suggestions identified in this section can be used as the starting point for EPC risk management. Weekly risk management meetings are recommended during EPC as well as the participation of the owner's team in these meetings. All aspects of risk should be assessed, including the financial impacts.

14.3 Risk Register

14.3.1 General

The risks for each category listed in Section 14.2 and the mitigation measures are contained in the Risk Register, which is included at the end of this chapter as Table 14-2.

14.3.2 Format

The following components are included in the Register:

- ID No.
- Risk title
- Group (category)
- Description of risk and impact
- Exposure before mitigation
- Mitigation measures
- Exposure after mitigation
- Mitigation cost
- Residual risk

14.3.3 Probability and Impact

The following factors were used in assessing probability and impact of the risks:

Probability

Scale	Description	Score
High	Definitely	4
Medium	Probably	3
Low	Possibly	2
Negligible	Unlikely	1

Impact

Scale	Description	Score
High	Large	4
Medium	Significant	3
Low	Small	2
Negligible	Minimal	1

The rating of exposure to a risk was considered as the product of the scores for the probability and impact.

14.4 Top Risks

A summary of the top risks is listed in Table 14-1 and complete Risk Register is seen in Table 14-2. As can be seen, these range from engineering issues and technology through construction, schedule, cost, and operation. The exposure of these risks will likely change over the course of EPC development as the mitigation measures are developed and other new risks become known. It is essential that all risks (not just the high-ranking risks) are assessed as part of the mitigation plan.

14.5 HAZID/HAZOP Risks

HAZID and HAZOP were conducted as part of the FEED scope. Chapter 13 and Appendices N and O detail additional risks and the plan for mitigation.

14.6 Emissions and Public Safety Risks

Exact requirements for air emissions will be determined after the pilot plant provides additional information on emissions although no increase in air emissions of the permitted constituents is expected due to diversion of the flue gas to the PCC plant. There is always a risk that air quality regulations may change.

Table 14-1

Summary of Major Risks and Mitigation Measures

ID	Risk	Description of Risk and Impact	Risk score	Mitigation Measure
EN9	Gas turbine back-pressure requirements are met	Ensure that gas turbine back-pressure requirements are met for all operating scenarios and that gas turbines do not trip due to high backpressure.	9	Owner to get final information from Siemens, the turbine supplier, and ensure that Siemen's agrees with the dampers interlocking logic during EPC design.
EN14	LP steam pressure	LP steam conditions not according to the reboiler requirement.	9	Confirm with Siemens that modifications made by them are adequate to provide sufficient pressure for the required operating scenarios as designed. progresses.

ID	Risk	Description of Risk and Impact	Risk score	Mitigation Measure
T2	Scale-up issue with liquid distribution in columns	Concerns with liquid distribution.	12	Use of circular columns. Vendor performed engineering of distributors during FEED study. Further studies should be undertaken in EPC for final design.
CC3	Hours of operation of power plant	If NGCC plant runs for less than 5,000 hours, it will have major impact on CO_2 capture cost	16	Consider range when evaluating CO_2 capture cost. Consider Monte-Carlo simulation.
SC1	Long-lead items	Lead time for compressor and columns could impact the overall EPC schedule.	12	Evaluate market conditions and consider Pre-NTP so the long-lead items can be procured early. Negotiate delivery with vendors that meets schedule requirements.
SC8	Environmental permit delays	Amendments to existing environmental permits will be required. There is a risk that agencies may impose extra conditions due to change in air quality regulations and would delay approval.	12	Coordinate with Sherman and environmental agencies prior to EPC and ensure that appropriate contingency is included in the EPC schedule.
CO6	Delay by a subcontractor to finish work at fabrication yard, impacting other subcontractors who also need the fabrication yard	Construction delay.	9	Include in contract negotiations with owner/power plant. Monitor work progress at the fabrication yard closely and take steps to rectify situation if schedule starts slipping. Maintain the right to step in.
CC1	Intermittent/ infrequent power plant operation	Impact on solvent due to frequent start/stop of the plant; increased cost of maintaining the PCC plant.	12	Ensure that adequate solvent storage is available to protect the solvent so it does not degrade.
CT10	Inexperience of PCC plant operators	Concern that there is limited availability of operators with PCC or equivalent experience. Could impact schedule, cost, and safety.	12	Provide plant operator with training, simulators, and experienced shift operators. Hire key personnel with chemical plant experience.

Investigation is required regarding a proper disposal site for the reclaimer waste which is anticipated to be approximately 1730 tonnes as described in Section 3.5.5.

Noise modeling should be done to determine the near- and far-field noise levels so that adequate measures can be taken to meet the required limits.

14.7 Technology Risk

The proposed PCC plant design is based on established technology first proposed by R. R. Bottoms in 1930 (see Section 2.1.1). It is anticipated that any risk will be associated more with the economics of full-scale operation and not with the major workings of the PCC plant. A pilot plant will provide more information on potential unknowns and possible long-term operational issues that may emerge.

There are three “technology” risks identified in the Risk Register (Table 14-2), and they all relate to scale-up issues. It is believed that these can all be mitigated with due diligence during the EPC design phase.

Table 14-2

Risk Register

ID	Risk	Group	Description of Risk and Impact	Exposure Before Mitigation			Mitigation Measures	Exposure After Mitigation		
				Probability	Impact	Exposure		Probability	Impact	Exposure
EN1	Approval process for design	Engineering	Owner may require extensive input into detailed design process. May impact overall EPC schedule.	2	3	6	Owner to discuss this with the EPC bidder during the bid phase.	1	4	4
EN2	Far-field noise requirements	Engineering	During FEED stage, the external (background) noise factors were not available; therefore, no noise analysis was done. Although major noise sources are within buildings, this may not be sufficient to meet the final noise requirements. Final design must not be approved until this issue is addressed.	2	3	6	Obtain detailed noise requirements from owner so that they are addressed in EPC pricing.	1	3	3
EN3	Site investigations	Engineering	Sherman power plant site investigation is available, but geotechnical investigation for the PCC site was not done.	2	3	6	Owner to issue site investigation report prior to EPC bid.	1	3	3
EN4	Failure of semiconductor converters	Engineering	Failure of semiconductor converters would limit operation of the VFD for flue gas blowers and CO_2 compressor.	2	4	8	Specify bypass switch	1	2	2

Table 14-2 (continued)

Risk Register

ID	Risk	Group	Description of Risk and Impact	Exposure Before Mitigation			Mitigation Measures	Exposure After Mitigation		
				Probability	Impact	Exposure		Probability	Impact	Exposure
EN5	Interfaces with power plant	Engineering	Exact locations of interface points may change. Design may have to change to accommodate final interface requirements.	2	3	6	Confirm interface points with Sherman power plant owner and incorporate any changes in the EPC cost and schedule.	1	2	2
EN6	Codes and standards	Engineering	Some codes and standards that were referenced in the FEED study documents are out of date. New code requirements may impact cost and schedule.	1	2	2	Finalize all requirements for codes and standards in EPC contract.	1	1	1
EN7	Utilities survey	Engineering	As-built undergrounds were checked in the FEED, but no underground survey has been performed at the site. If any unexpected undergrounds are encountered during construction, it could have major impact on cost and schedule.	2	3	6	Owner to undertake survey of all existing undergrounds in the relevant project site areas.	1	2	2
EN8	Schedule power plant work for tie-ins	Engineering	Power plant schedule may not match EPC schedule requirements.	2	3	6	Finalize interface between tie-in schedule and EPC schedule during EPC negotiations.	1	3	3

Table 14-2 (continued)

Risk Register

ID	Risk	Group	Description of Risk and Impact	Exposure Before Mitigation			Mitigation Measures	Exposure After Mitigation		
				Probability	Impact	Exposure		Probability	Impact	Exposure
EN9	Gas turbine back-pressure requirements are met	Engineering	Ensure that gas turbine back-pressure requirements are met for all operating scenarios and that gas turbines do not trip due to high backpressure.	3	3	9	Owner to get final information from Siemens and ensure that Siemens agrees with the dampers interlocking logic during EPC design.	2	3	6
EN10	Fouling of heat transfer surfaces	Engineering	Impacts process efficiency.	2	2	4	Address in detailed design.	1	2	2
EN11	MV grounding	Engineering	Increased project costs (full insulation on equipment); increased risk of equipment damage; decreases operator safety if plant continues to operate during a ground fault condition.	2	3	6	Address in detailed design.	1	2	2
EN12	Fogging temp control	Engineering	Minimal distance is available between the secondary fogger and the absorber. The short distance may prevent adequate temperature control due to incomplete evaporation prior to reaching the thermocouple.	2	3	6	Determine during EPC if the distance has to be increased.	1	2	2

Table 14-2 (continued)

Risk Register

ID	Risk	Group	Description of Risk and Impact	Exposure Before Mitigation			Mitigation Measures	Exposure After Mitigation		
				Probability	Impact	Exposure		Probability	Impact	Exposure

EN13	Change in stack due to air permit	Engineering	Change stack height and monitoring requirements.	3	3	9	Obtain air permit amendment, and include any impact in the design during the next project phase.	1	4	4
EN14	Low LP steam pressure	Engineering	LP steam conditions not according to the reboiler requirement.	3	3	9	Confirm with Siemens that modifications made by them are adequate to provide sufficient pressure for the required operating scenarios.	1	2	2
EN15	CO_2 environment in the compressor building	Engineering	Exposure to CO_2 environment in the building unless CO_2 system analyzer is located in a room by itself.	2	3	6	Isolate the analyzer room from the rest of CO_2 compressor building areas.	1	1	1
EN16	Amine effect on cable insulation systems	Engineering	Cable failure due to exposure.	2	2	4	Specify cable jacket systems for service. May require special cable.	1	2	2
EN17	HRSG stacks structural failure	Engineering	First-of-a-kind tie-in to an existing metal stack.	2	3	6	Peer review of design modification.	1	2	2
T1	Scale of PCC plant equipment	Tech risks	Potential gas distribution problems in absorber and stripper columns.	2	3	6	CFD modeling by the internals supplier and verification of suppliers' experience with similar size design.	1	1	1

Table 14-2 (continued)

Risk Register

ID	Risk	Group	Description of Risk and Impact	Exposure Before Mitigation			Mitigation Measures	Exposure After Mitigation		
				Probability	Impact	Exposure		Probability	Impact	Exposure
T2	Scale-up issue with liquid distribution in columns	Tech risks	Concerns with liquid distribution.	3	4	12	Use of circular columns. Vendor performed engineering of distributors during FEED study. Further studies should be undertaken in EPC for final design.	1	2	2
T3	Large thermosiphon reboilers	Tech risks	Limited experience with this size and type of welded plate-and-frame heat exchangers.	3	3	9	Due diligence on design and procure from a supplier who has demonstrated prior experience.	1	2	2
PR1	Delays in supplying forgings for compressors	Procurement	Potential large demand for forgings during procurement phase due to market condition. Forging work is often subcontracted out by compressor vendors. Delay in supply would have major impact on project schedule.	2	4	8	Start procurement process early. Detailed investigation of forging capability/availability. Address risk in schedule.	1	4	4
PR2	Piping, valve, and fitting lead time for stainless steel	Procurement	Potential schedule delays on delivery of SS pipe and fittings.	2	3	6	Undertake detailed investigation of supplier's lead times and existing orders.	1	3	3

Table 14-2 (continued)

Risk Register

ID	Risk	Group	Description of Risk and Impact	Exposure Before Mitigation			Mitigation Measures	Exposure After Mitigation		
				Probability	Impact	Exposure		Probability	Impact	Exposure
PR3	Unable to obtain stainless steel pipe reducers in 48" x 34" and 34" x 20" sizes to ASME B16.9	Procurement	Late delivery and construction delay.	3	3	9	Start the procurement process early for these commodities.	1	2	2
PR4	Equipment deliveries of major equipment: absorbers, stripper	Procurement	Construction schedule.	2	3	6	Procure early and/or pay premium for fast delivery; ensure that adequate space is provided at the site fabrication yard and that supplier has adequate work-hours.	1	2	2
PR5	Supplier quality for new suppliers	Procurement	Equipment quality and delivery.	3	3	9	Implement a combined engineering and supplier quality audit and shop inspection program for those suppliers.	2	2	4
PR6	Equipment packaging not being bid as part of the bids	Procurement	Equipment ships without proper packaging from overseas suppliers.	2	2	4	Prepare packaging requirements for each supplier or use consolidator for shipping	1	2	2

Table 14-2 (continued)

Risk Register

ID	Risk	Group	Description of Risk and Impact	Exposure Before Mitigation			Mitigation Measures	Exposure After Mitigation		
				Probability	Impact	Exposure		Probability	Impact	Exposure
PR7	Equipment deliveries for major equipment: compressor, compressor motor, CO_2 send-out pumps	Procurement	Construction schedule.	2	3	6	Investigate purchase of shop schedule space; procure early and/or pay premium for fast delivery, and plan delivery into schedule.	1	2	2
PR8	Commodity pricing and availability	Procurement	Market conditions change, resulting in increased commodity prices and supply/delivery issues.	2	3	6	Commodity pricing and availability to be reconfirmed and incorporated in EPC cost; long term contract negotiated.	2	2	4
PR9	Worldwide economic issues	Procurement	Risk of supplier or sub-supplier bankruptcy.	2	4	8	Check supplier's financials prior to award. Require sub-supplier list with bids.	1	1	1
PR10	Availability of subcontractors	Procurement	May affect ability to have local fabrication.	2	3	6	Due diligence on subcontractor's workload.	1	2	2
PR11	Inventory control on-site, including fabrication yard	Procurement	Concern with poor inventory control resulting in inability to maintain schedule.	1	3	3	Place a supplier quality lead in fabrication yard.	1	2	2

Table 14-2 (continued)

Risk Register

ID	Risk	Group	Description of Risk and Impact	Exposure Before Mitigation			Mitigation Measures	Exposure After Mitigation		
				Probability	Impact	Exposure		Probability	Impact	Exposure
PR12	Lead time for HRSG stack structural steel	Procurement	Tie-in schedule.	1	3	3	Predetermine jumbo steel size, and order early.	1	2	2
PR13	Limited number of suppliers for some critical equipment: packing reboilers reclaimer	Procurement	Lack of competition may impact price and delivery.	2	2	4	Due diligence by procurement to qualify experienced vendors.	1	1	1
MA1	Sub-suppliers not following specification requirements	Manufacturing	Standards not being flowed down to sub-suppliers; consequently, equipment does not meet specification.	2	2	4	Use shop inspectors with knowledge of applicable standards.	1	2	2
MA2	Sub-suppliers not following specification requirements	Manufacturing	Risk of using unidentified sub-suppliers.	2	2	4	Restrict use of unidentified sub-suppliers in procurement contract.	1	2	2
MA3	Quality control for major equipment	Manufacturing	Construction schedule delay.	2	3	6	Shop quality surveillance; engineering shop visit; previous supplier experience.	1	2	2

Table 14-2 (continued)

Risk Register

ID	Risk	Group	Description of Risk and Impact	Exposure Before Mitigation			Mitigation Measures	Exposure After Mitigation		
				Probability	Impact	Exposure		Probability	Impact	Exposure
TR1	Loss of major/long-lead equipment during transportation	Transportation and logistics (T&L)	Risk of loss of major/long-lead equipment due to damage during crane lift or accident during transport.	1	4	4	Provide appropriate insurance provisions. Thoroughly review all transportation plans.	1	3	3
TR2	Transporter inability to mitigate problems with local requirements	Transportation	Construction delay.	1	3	3	Due diligence on transporter.	1	1	1
TR3	Local unrest	Transportation	Use caution on routing of equipment.	1	3	3	T&L planning.	1	2	2
TR4	Damage to equipment during onloading and offloading	Transportation	Construction delay and project cost due to repair or remanufacturing.	1	3	3	Ensure that proper plan is prepared and approved; adequate insurance.	1	1	1
TR5	Transportation from fab yard to installation site	Transportation	Possible equipment damage.	1	2	2	Rigging and transportation plan.	1	1	1
TR6	Weather delay	Transportation	Construction delay.	2	2	4	Include schedule contingency; planning of heavy lifts.	1	2	2

Table 14-2 (continued)

Risk Register

ID	Risk	Group	Description of Risk and Impact	Exposure Before Mitigation			Mitigation Measures	Exposure After Mitigation		
				Probability	Impact	Exposure		Probability	Impact	Exposure
PE1	Changes in air quality regulations	Permits and environmental	Change in design to incorporate air permit requirements resulting in impact on cost and schedule.	2	3	6	Apply for permit early, and plan for changes.	1	2	2
PE2	Availability of reclaimer waste disposal site	Permits and environmental	The disposal site may be far and disposal cost higher than expected.	2	2	4	Owner to resolve prior to EPC contract.	1	1	1
PE3	Noise issues during construction and startup	Permits and environmental	Unknown at this time.	2	2	4	Identify prior to EPC contract.	1	2	2
CO1	Local approval for permits	Construction	May be delay in obtaining permits. Would impact EPC schedule.	2	4	8	Finalize responsibility for permits during EPC bid phase. Review local requirements in detail.	1	3	3
CO2	Other construction activity at power plant site	Construction	There is a risk that other construction activity will be undertaken at the power plant at the same time as the CO_2 project. This will impact labor availability and nearby fabrication facility availability, delays in tie-ins.	1	3	3	Work with owner to determine risk; develop mitigation plan options (include early agreements with fabrication shops for shop space).	1	2	2
CO3	Damage to NGCC plant during power plant operation	Construction	Risk of damage to NGCC plant while operating during tie-in works.	2	4	8	Develop detailed work packages and safety reviews prior to construction.	1	3	3

Table 14-2 (continued)

Risk Register

ID	Risk	Group	Description of Risk and Impact	Exposure Before Mitigation			Mitigation Measures	Exposure After Mitigation		
				Probability	Impact	Exposure		Probability	Impact	Exposure
CO4	Damage to NGCC plant during power plant shutdown for tie-ins	Construction	Risk of damage to NGCC plant during shutdown, which could result in delay of restart of power plant.	2	4	8	Develop detailed work packages and safety reviews prior to construction.	1	3	3
CO5	Availability of craft (manual workers)	Construction	May have difficulty obtaining craft if there are other major construction jobs in the area at the time.	2	4	8	Complete thorough labor survey prior to EPC. Develop contingency plans.	1	4	4
CO6	Delay by a subcontractor to finish work at fabrication yard, impacting other subcontractors who also need the fabrication yard	Construction	Construction delay.	3	3	9	Include in contract negotiations with owner/power plant. Monitor work progress at the fabrication yard closely, and take steps to rectify situation if schedule starts slipping. Maintain right to step in.	2	2	4
CO7	Weather impact on construction	Construction	Risk of schedule delay and construction cost.	2	3	6	Construction schedule accounts for known weather in the area.	1	1	1

Table 14-2 (continued)

Risk Register

ID	Risk	Group	Description of Risk and Impact	Exposure Before Mitigation			Mitigation Measures	Exposure After Mitigation		
				Probability	Impact	Exposure		Probability	Impact	Exposure
CO8	Local craft labor availability (direct hire and subcontracts)	Construction	Impacts schedule, safety, and cost.	1	3	3	Conduct thorough labor survey.	1	2	2
CO9	Language barrier with international craft	Construction	Impacts schedule, safety, and cost.	1	2	2	Conduct thorough labor survey.	1	1	1
CO10	Productivity	Construction	Impacts schedule, safety, and cost.	2	3	6	Conduct thorough labor survey.	1	3	3
CO11	Quality control of labor	Construction	Impacts schedule, safety, and cost.	2	2	4	Conduct thorough labor survey.	1	2	2
CO12	Safety awareness of craft pool	Construction	Impacts schedule, safety, and cost.	2	3	6	Extensive safety training.	1	2	2
CO13	Availability of construction laydown at site	Construction	Impacts schedule, safety, and cost.	1	3	3	Address issue prior to EPC contract with the owner to provide sufficient area.	1	1	1
CO14	Scheduled power plant outage	Construction	Impacts schedule, safety, and cost.	2	3	6	Address issue with the power plant owner prior to EPC contract.	1	2	2
CO15	Availability of cranes	Construction	Impacts schedule, safety, and cost.	2	3	6	Address issue early during EPC contract.	2	2	4

Table 14-2 (continued)

Risk Register

ID	Risk	Group	Description of Risk and Impact	Exposure Before Mitigation			Mitigation Measures	Exposure After Mitigation		
				Probability	Impact	Exposure		Probability	Impact	Exposure
CO16	Access for cranes	Construction	Impacts schedule, safety, and cost.	2	2	4	Early planning per schedule.	1	2	2
CT1	If power plant is not operating, PCC will not have sufficient steam for startup	Commissioning and testing	Delay to startup and commissioning of the plant.	2	3	6	Agree to plan upfront with power plant owner as part of EPC negotiations. Coordinate cleaning of steam lines. May use mechanical cleaning of steam lines in lieu of steam blow.	1	2	2
CT2	Major PCC equipment failures	Commissioning and testing	Impact to schedule.	1	3	3	Majority of equipment is redundant, except for stripper, flue gas blowers (2x50%), and CO_2 compressor. Review warranties, spare parts, local/nearest repair shops, and so on. Insurance to cover cost but not schedule delay.	1	1	1
CT3	Potential failure of flue gas blowers	Commissioning and testing	Impact to schedule.	1	3	3	Examine option for shop test, if possible. Recommend rotors are shop balanced.	1	1	1

Table 14-2 (continued)

Risk Register

ID	Risk	Group	Description of Risk and Impact	Exposure Before Mitigation			Mitigation Measures	Exposure After Mitigation		
				Probability	Impact	Exposure		Probability	Impact	Exposure
CT4	CO_2 pipeline outside the PCC Plant battery limit is not available	Commissioning and testing	Impact to schedule.	3	3	9	Install temporary provisions such as CO_2 gas measurement to the absorbers to continue with startup. PCC schedule has to match construction and availability of the pipeline.	1	2	2
CT5	Absorber/stripper foaming	Commissioning and testing	Impact to schedule.	1	3	3	Resolve with internals packing supplier.	1	2	2
CT6	Availability of startup technicians	Commissioning and testing	Impact to cost.	2	3	6	Ensure that experienced EPC contractor is selected.	1	2	2
CT7	Chemical price fluctuation	Commissioning and testing	Impact to cost.	2	2	4	Final cost estimate to include possible price fluctuations; long term contract	1	2	2
CT8	Failure to meet performance guarantees	Commissioning and testing	Impact to schedule and cost.	1	3	3	Design in margins between design point and guarantee point. Additional support information from technical verification/pilot plant program.	1	2	2

Table 14-2 (continued)

Risk Register

ID	Risk	Group	Description of Risk and Impact	Exposure Before Mitigation			Mitigation Measures	Exposure After Mitigation		
				Probability	Impact	Exposure		Probability	Impact	Exposure
CT9	Potential rework	Commissioning and testing	Impact to schedule and cost.	2	2	4	Quality assurance and control.	1	1	1
CT10	Inexperience of PCC plant operators	Commissioning and testing	Concern that there is limited availability of operators with PCC or equivalent experience. Could impact schedule, cost, and safety.	3	4	12	Provide plant operator with training, simulators, and experienced shift operators. Hire key personnel with chemical plant experience.	1	2	2
SC1	Long-lead items	Schedule	Lead time for compressor and columns could impact overall EPC schedule.	3	4	12	Evaluate market conditions and consider pre-NTP so the long-lead items can be procured early. Negotiate delivery with vendors that meets schedule requirements.	2	3	6
SC2	Loss and/or critical equipment damage	Schedule	Loss of equipment during shipping or installation.	1	3	3	Insurance including liquidated damages (LDs).	1	2	2
SC3	Delay to startup and operation due to delay in CO_2 pipeline	Schedule	Impact cost, schedule, enforcement of warranties, and so on.	2	3	6	Unknown; however, may buy extended warranties; confirm pipeline schedule just prior to EPC and incorporate in schedule	2	2	4

Table 14-2 (continued)

Risk Register

ID	Risk	Group	Description of Risk and Impact	Exposure Before Mitigation			Mitigation Measures	Exposure After Mitigation		
				Probability	Impact	Exposure		Probability	Impact	Exposure
SC4	Delay to startup and operation due to power plant not operating regularly and/or at full power	Schedule	Impact cost, schedule, enforcement of warranties, and so on.	2	3	6	Unknown; however, may buy extended warranties.	2	2	4
SC5	Delays of power plant owner milestones for turnover of utilities (for example, modifications to steam turbine)	Schedule	Impact to schedule.	2	3	6	Schedule to be negotiated during EPC.	1	3	3
SC6	Extreme weather	Schedule	Impact to schedule.	1	3	3	Plan for extreme/work arounds.	1	2	2
SC7	Interface issues between subcontractors	Schedule	Field mismatches.	3	2	6	Hold discussions with subcontractors, and implement proper quality control.	2	2	4

Table 14-2 (continued)

Risk Register

ID	Risk	Group	Description of Risk and Impact	Exposure Before Mitigation			Mitigation Measures	Exposure After Mitigation		
				Probability	Impact	Exposure		Probability	Impact	Exposure
SC8	Environmental permit delays	Schedule	Amendments to existing environmental permits will be required. There is a risk that agencies may impose extra conditions due to change in air quality regulations and would delay approval.	3	4	12	Coordinate with the owner and environmental agencies prior to EPC, and ensure that appropriate contingency is included in EPC schedule.	2	3	6
PF1	Impact of exchange rate fluctuation on capital costs	Project finance	Exchange rate fluctuations could impact capital costs.	3	3	9	Hedge currencies as needed, and maintain procurement source flexibility.	1	4	4
PF2	Restriction of credit availability at the supplier level	Project finance	May impact cash flow, availability of suppliers, sub-suppliers, and fabricators.	2	3	6	Title transfer to owner phased; use established suppliers with solid balance sheets.	1	3	3
PF3	Wide variations in major component cost between estimate and execution	Project finance	Impact on capital cost estimate.	2	3	6	Refresh cost estimate during EPC.	2	3	6
PF4	Lack of lump sum bids	Project finance	Impact on the ability to set the financing level.	4	2	8	EPC contractor to provide lump sum bid. Contingency to reflect cost-reimbursable contract.	1	2	2

Table 14-2 (continued)

Risk Register

ID	Risk	Group	Description of Risk and Impact	Exposure Before Mitigation			Mitigation Measures	Exposure After Mitigation		
				Probability	Impact	Exposure		Probability	Impact	Exposure
PF5	Over-capitalization due to future enhanced technology improvements	Project finance	Capital investment reflecting current technology.	2	3	6	Reevaluate possible technology improvements after the pilot plant data are available.	1	2	2
CP1	General CAPEX risks	CAPEX	Risk of impact on CAPEX price.	2	3	6	Refer to sensitivity analysis in FEED study.	1	2	2
CP2	Scale of PCC plant equipment	CAPEX	Potential gas distribution problems in absorber and stripper columns.	2	3	6	Select experienced internals supplier, and perform CFD modeling.	1	2	2
CP3	Missing optimal electrical design	CAPEX	Impact on O&M and capital costs.	2	3	6	Optimization in design of electrical systems, motors sizing, and so on during EPC	2	2	4
CP4	Labor pricing	CAPEX	Labor pricing could change from that assumed in the CAPEX. Depends in part on labor demand due to work in surrounding areas at the time.	2	3	6	EPC to complete detailed labor study/survey according to normal standards. Address findings with owner.	1	2	2
OP1	General OPEX risks	OPEX	Impact on OPEX.	2	3	6	Refer to sensitivity analysis in FEED study	1	2	2
OP2	Consumable costs	OPEX	Impact on costs.	2	3	6	Possible long-term contracts.	2	2	4

Table 14-2 (continued)

Risk Register

ID	Risk	Group	Description of Risk and Impact	Exposure Before Mitigation			Mitigation Measures	Exposure After Mitigation		
				Probability	Impact	Exposure		Probability	Impact	Exposure
OP3	Missing optimal electrical design	OPEX	Impact on O&M and capital costs.	3	3	9	Optimization in design of electrical systems, motors sizing, and so on during EPC.	1	2	2
CC1	Intermittent/ infrequent power plant operation	CO_2 capture cost	Impact on solvent due to frequent start/stop of the plant; increased maintenance cost of the PCC plant.	3	4	12	Ensure that adequate solvent storage is available to protect the solvent, so it does not degrade.	2	2	4
CC2	Energy costs (also see OPEX costs)	CO_2 capture cost	Electricity is a large cost, and it may increase over the 20-year life.	2	4	8	Consider range when evaluating CO_2 capture costs as part of investment decision.	2	2	4
CC3	Hours of operation of the power plant	CO_2 capture cost	If NGCC plant runs for less than 5,000 hours, it will have major impact on CO_2 capture cost.	4	4	16	Consider range when evaluating CO_2 capture costs as part of investment decision. Consider Monte-Carlo simulation.	2	2	4
OPR2	Process risk	Operation	Process-related risks.	2	2	4	See Chapter 13 for PCC plant HAZID and HAZOP.	1	1	1

Chapter 15: Procurement, Construction, and Commissioning

15.1 Contracting and Purchasing Strategy

15.1.1 Introduction

For contracting and procurement, the contractor should source globally and think locally, matching project schedules with market conditions, shop availability, and potential local capacity to find the best materials and services at the most competitive prices.

For supply chain, the goal of safely delivering equipment, materials, and services of the right quality, on time, and within established commercial budgets can be achieved using a combination of the following buyout strategies:

- A competitive bid, evaluate, award (BEA) process. For select items, shortlisting may take place based on a preliminary technical and commercial assessment to expedite award. To the extent practical, low-cost country sourcing from proven suppliers and "manufacturer's standard" strategies should be used.
- Single-source procurements. The procurement group should evaluate single-source procurements based on customer standardization initiatives (if any; that is, limit operational spare holdings), positive past performance, favorable commercial terms from recent projects, and where there are appropriate opportunities to leverage strategic agreements. This strategy will save both Engineering and Procurement service hours while striving for target pricing at or below previous project levels and foster business relationships within the supply chain.
- Sole-source procurements. Equipment selections resulting from the FEED study and lessons from the pilot plant should be considered for sole-source procurement in collaboration with Engineering and vendors.
- Consider online bidding (reverse auction) for commodities where it may be commercially advantageous. These commodities consist of items such as cable, cable trays, bulks, and general service pumps.
- Identify commodities that could be procured off-the-shelf (OTS), eliminating the need for a technical evaluation.
- Consolidate commodities, where possible, to reduce the number of purchase orders which will reduce job hours and increase purchasing volume to drive down commitment costs.
- Promote opportunities to procure the supplier's standard equipment ("buy what they build") to reduce cost, improve quality, shorten vendor drawing review, and shorten delivery.
- Direct hire execution supplemented by specialty subcontractors.
- Incentivize early receipt of critical vendor data and critical path services with key selected suppliers/subcontractors.
- Make limited use of liquidated damages.

15.1.2 Traffic and Logistics Plan

A traffic and logistics (T&L) plan must be prepared early in the project before the contracting and purchasing strategy is finalized. Most equipment and materials for the project would be purchased on a "delivered" basis, and the EPC contractor must have a plan for how the equipment and materials will be delivered. This is particularly important for oversized and/or heavy equipment.

The Sherman plant is located on approximately 103 acres in the Progress III Industrial Park in the city of Sherman, in Grayson County, Texas. The physical address of the project is 525 Progress Drive, TX. The property is located about 1-1/2 miles from US-75 (the nearest highway) and can be accessed via local roadways FM 1417, Howe Drive, and Progress Drive; these details will have to be reconfirmed when the traffic plan is prepared.

Access via rail should also be determined. Burlington Northern Santa Fe (BNSF) Railroad Rail is in the vicinity of the jobsite. Potential location for unloading railcars is at the section of BNSF-owned track (920 ft) running parallel to Howe Drive. If rail cars are used, the goal should be to prevent or minimize any demurrage on railcars following arrival and to minimize any standby costs on the heavy haul subcontractor's equipment. This will require close coordination with the shipper, the heavy haul subcontractor (for railcar placement under hook, unloading, and transport to the site), and the project procurement and construction teams.

Most equipment and materials should be purchased, so the responsibility for shipment to the site is the supplier's responsibility. In the event of an incident resulting in damage prior to receipt at the job site, the project should file appropriate claims to ensure replacement and/or repair by the supplier.

15.1.3 Identification of Critical Equipment

The project should identify equipment and materials critical to the construction and startup schedule. The following categories should be considered in deciding which items are critical:

- Lead time for their replacement.
- Value agreed to by project management.
- The weight of any single piece.
- Whether any special handling, lifting, or transport is required.
- Equipment/material where the size exceeds a standard 40-ft container (12 m length, 2.5 m wide, 2.5 m high) or equivalent road trailer and with a single unit value greater than a predetermined limit.
- Where a single item has a center of gravity off balance and its value exceeds a predetermined limit.
- On-deck shipments (excluding container cargo) and where a single item value is greater than $1,000,000.
- Ocean tug and/or barge shipments (where agreed by underwriters).

15.1.4 Strategies for Specific Commodities

Major equipment: major rotating equipment should be competitively bid using only qualified suppliers based on global sourcing. For a small number of select items, shortlisting of bidders may be considered based on the budgetary bids received during the FEED study. To the extent practical, low-cost country sourcing from proven suppliers and "manufacturer's standard" strategies should be used.

Columns and vessels: within the shipping limitations, fabricators should be shortlisted based on the following:

- Technical and commercial evaluations
- Safety and quality evaluation
- Projected shop capacity use
- Prior experience
- Potential division of total scope among several qualified fabricators to minimize shop capacity
- Finance
- Other performance risk associated with committing to a single supplier

Subcontractors' ability to combine the field-erected tanks scope of work with CO_2 absorbers and stripper should also be considered to limit the number of individual contractors on-site and leverage work volume (that is, single mobilization fee).

To the extent practical, columns and vessels should be shipped in the largest sizes possible to minimize field work. Column dress-out will be done on-site prior to erection.

Exchangers: fabricators should be shortlisted based on technical and commercial evaluations, projected shop capacity use, prior experience, and division of total scope among several qualified fabricators to minimize potential capacity, finance, or other performance risk.

Fabricated structural steel: to be purchased from steel fabricator(s) with a proven quality and delivery record on previous projects. There are several quality fabricators in Texas, Louisiana, and Oklahoma that should be considered. The advantages of local suppliers on "think local" and delivery schedule should be considered in the execution decision. To expedite the procurement and fabrication cycle, advance bills of materials should be furnished to the fabricator by engineering to facilitate pre-buying structural steel shapes ahead of the issue for fabrication shop drawings. After fabrication, structural steel should be galvanized prior to shipment to the jobsite.

Fabricated pipe spools: timely pipe spool deliveries are essential to successful project execution. The EPC contractor may consider a strategic fabricator, on a single source basis, if the contractor is confident of outcome in terms of quality and timely delivery.

There are fabricators with an in-house vertical supply chain that enables them to manufacture their own pipe and fittings and provide pipe spool fabrication at one location. Having work performed at one location mitigates the possibility of material damage, carrier delays, and other risks common to shipping materials around the world.

The EPC contractor should provide initial material take-offs (MTOs) for the 2-in. and smaller pipe and bulk materials, and the fabricator should perform final MTOs from issued-for-construction (IFC) isometrics to identify any shortages and "top off" these items by procuring additional quantities. Spools should be delivered to the jobsite on shipping racks with finish coating applied. Work packages will be shipped together from the fabricator to the extent practical.

The pipe fabricator should:

- Have a fully integrated engineering, procurement, and materials management processes to provide optimized schedules without compromising quality.
- Be able to manage change effectively.
- Establish a technical query (TQ) system for fast and traceable TQ correspondence.
- Adapt to changing construction priorities. Spool fabrication planning and material hard allocation are performed in small batches.
- Have an advanced material management expertise and supporting system.

Limited pipe fabrication by others may be implemented based on construction priority, pipe material and size, assembly location, raw material sourcing locations, or other criteria. The team should continue to review the acquisition strategy as spool fabricators' shop capacities are confirmed closer to potential award dates to ensure certainty of outcome and on-time performance.

Electrical cable and bulks: the recommended electrical bulks acquisition strategy is to competitively bid and source based on the supplier's local support and expertise within the proximity of the jobsite. The project would likely bid cable reel and bulk materials management as part of the electrical bulk supplier's scope.

15.1.5 Procurement and Contracting Plan Options

One major EPC vertical lump sum turnkey (LSTK) contract package is recommended for easier coordination and to ensure that all responsibilities lie with one contractor.

The alternative contracting plan options are based on the principle of identifying a small number of large contracts. This allows the larger, more capable construction companies to be engaged in their area of expertise. In addition, there will be several smaller service-type contracts in which smaller companies will participate. Contract packages should be determined using the following parameters:

- Integrated project schedule requirements
- Technical and functional uniqueness
- Engineering design schedule
- Equipment and material delivery schedule
- Capability and availability of local contractors

The contracts could be a mixture of horizontal and vertical packages.

The selection of the form of contract to be used should depend on several factors:

- The nature of the work and/or technology
- The maturity of engineering completion
- Capability of contractors
- Availability of contractors
- The degree of schedule control required
- The risk profile of the work package
- The amount of risk transfer vs. cost

15.2 Construction Approach and Overview

This section outlines the recommended construction philosophy. It addresses the construction methods and sequences of operations required to safely construct the PCC processing facility and perform the required tie-ins to the power plant.

15.2.1 Responsibilities

The EPC contractor is responsible for managing the construction site. The responsibility of the owner's organization is to provide access, obtain permits, and provide utilities according to the agreement in the EPC contract.

15.2.2 General Approach

The construction approach recommended is direct hire, supplemented by subcontracts for specialty work such as security, survey, site preparation, earthwork, field-erected vessels and tanks, insulation, cathodic protection, fire protection, asphalt paving, landscaping, architectural finishes, prefab buildings, HVAC work, and so on.

The construction sequence should consider items such as the following:

- Time of year the site will be mobilized
- Amount of sitework/earthwork required
- The size of the process and off-site areas
- Location of the utilities, large vessels, pipe rack(s), storage areas, large rotating equipment, and buildings
- Grade changes within the construction boundaries, that is, benched or steep slopes
- Available construction window, that is, time between construction mobilization and mechanical completion
- Accessibility of the construction site
- Laydown and pre-assembly areas
- Equipment delivery dates
- Types of construction, for example, underground utilities/services, rack piping, and open multi-level process structures or enclosed buildings
- Availability of basic building materials such as concrete, select fill, lumber, and steel
- Availability of construction utilities such as power and water
- Availability of skilled craft
- Outage/work schedule of existing plant

The construction methodology should include a mix of a modularization approach, where possible, and stick-built construction. Pre-assembly prior to an NGCC plant outage for the tie-ins should be maximized to keep the power plant outage durations as short as possible.

To minimize the use of scaffolding, use of manlifts is recommended, where possible.

15.2.3 Mobilization

Mobilization should occur approximately two to three months before the first foundation is scheduled to start to manage the earthwork subcontractor and/or to establish site security and install the temporary facilities such as power, water, fencing, parking, warehouse(s), offices, laydown yard(s), and pre-assembly areas. A superintendent and small office trailer should be mobilized ahead of the main construction force. Consideration should be given to items such as the following:

- Site survey and establishment of monuments tied to existing plant and determination of location of underground utilities, stormwater and drainage tie-in points, and so on
- Disposal of waste and excess materials
- Establishing a site ES&H and emergency response procedures
- Size and type of excavation and hauling equipment required
- Excavation and fill sequence
- Permits required
- Sources of fill material, if needed
- Testing requirements
- Historical weather data
- Stormwater management
- Trenching and shoring requirements
- Coordination of dewatering activities to ensure permit compliance

15.2.4 Earthwork, Underground Utilities, and Foundations

After Notice to Proceed (NTP), the project's priority should be to onboard the earthwork subcontractor, complete design for underground utilities, and procure the necessary material. The earthwork subcontractor will finish clearing/grubbing and mass earthwork for the site;

then the underground utilities installation will start. Installation of underground utilities—especially the stormwater piping—will be by the earthwork subcontractor. Pre-cast concrete cable trenches, manholes, and catch basins should be used to the extent possible to minimize the amount of poured-in-place concrete required for these items.

The foundation form, rebar, embeds, and concrete placement (FREP) activities shall then commence. If possible, they should be installed in conjunction with the earthwork to avoid double-handling the soil. Mat foundations are expected to be used for major plant structures. From a construction standpoint, shallow depth reinforced concrete mats with pedestals and pads are the preferred type of foundation for equipment and drilled bell-bottom piers for pipe racks.

A seal slab of lean concrete (mud mat) may be poured immediately after the excavation of a large foundation(s) to provide protection from the weather/groundwater seepage as well as a good working surface for anchoring formwork and a bearing surface for rebar chairs or cement blocks to support the reinforcement steel. Smaller foundations that will be poured the same day will not require a seal slab.

It is recommended that the rebar cages/mats and formwork be pre-tied and ganged in the largest sections, where possible, ahead of or concurrently with the excavation work to expedite schedule and improve productivity and quality.

Templates should be standard for all embedded anchor bolts.

The bulk of ready-mix concrete can be placed by chute directly from trucks and supplemented using buckets and/or concrete pumps for large or elevated placements. Admixtures are included in the mix designs to improve the workability of the concrete.

15.2.5 Mechanical Equipment

The construction team should provide input to Procurement on how the equipment should be shipped to the site and whether vendor representatives are needed at the site to assist with the installation. Where possible, equipment should be completely insulated and/or the finish coat of paint applied prior to the delivery of equipment to reduce the size of the on-site labor force and improve the construction schedule.

All equipment—including heat exchangers, pumps, compressors, motors, lube oil skids, and filters—is to be delivered to the jobsite, then assigned to the construction team to perform required preventive maintenance. To the extent possible, equipment should be unloaded and set on the foundation as it arrives. Delivery of equipment that arrives in multiple pieces, such as compressors, should be scheduled in a sequence that minimizes the number of pieces that have to be stored on-site and double-handled.

Long-lead critical path items such as the absorber and stripper columns are fabricated on-site. These large vertical columns are then dressed out with ladders, platforms, piping, instruments, lighting fixtures, and raceways to the extent possible at grade and set using heavy lift cranes. Large tanks are also field-fabricated.

The CGMS analyzer building is a prefabricated structure manufactured with all its internal equipment installed at the manufacturing facility.

15.2.6 Structural Steel

Miscellaneous structural steel should be fabricated and painted at the steel supplier's fabrication facility. Structural steel requiring fireproofing is coated at the fabrication facilities, and touchup can be performed after installation. Structural steel walkways and ladders are shipped with the steel to aid in erection.

Pipe racks should be designed and procured in modularized sections.

15.2.7 Piping

The large-bore pipe should be shop-fabricated. Pipe supports, shoes, guides, and anchors should be standardized to the maximum extent possible and purchased/fabricated and delivered early so that they are available, when needed, and the use of temporary supports is almost non-existent. Installation of small-bore piping should follow the large-bore pipe work. Small-bore piping can be shop-fabricated, but—if the schedule does not allow shop fabrication—it can be field-fabricated.

The above-ground piping in the pipe racks can be handled in two ways:

- The pipe can be loaded into the racks from the sides as the structural work is completed using either a crane or large forklift, the pipe positioned, and the

welding performed in multiple locations along the rack using scaffolding and/or scissor lifts.

- Welding stations can be set up at the ends of the rack(s), the pipe fed into the rack from a dummy section of rack for alignment, the weld made, and the pipe pulled into the rack to the next weld using an air tugger and rollers.

Most of the field welding of carbon steel and stainless piping uses the shielded metal arc welding (SMAW) process. The field welding of thin-wall and stainless steel piping can be done using the tungsten inert gas (TIG) process, supplemented by a flux-cored arc welding (FCAW) process for large-bore pipe. Welders must be qualified in accordance with applicable codes. Nondestructive examination (NDE) work is coordinated with other construction activities to avoid impacting them and preferably performed during off hours, that is, nights and weekends.

Piping should be hydro-tested, but in-service testing may be performed on low-pressure piping, if approved by the owner.

15.2.8 Electrical

The electrical work should commence with the underground grounding and duct bank work. The grounding should be installed after the rough grading is completed and before the area paving is ready to start, depending on how susceptible it will be to damage from other construction activities. HV cables from the power plant switchyard to the PCC plant should be in duct banks.

Motor control centers, switchgear, transformers, bus ducts, UPS systems, batteries, distribution panels, and the rest of the electrical equipment should be installed in the buildings or on its equipment pad as it arrives. The electrical/switchgear building requires a stick-build construction approach.

Plant lighting must be installed early for use during construction. Temporary power could initially be used for plant lighting.

Final calibration and testing of the equipment are performed at the jobsite.

15.2.9 Instrumentation

Control valves and inline instruments such as orifice flanges, sightglasses, and instrument bridles should be installed with the piping by the pipefitters. The balance of the field-mounted instrumentation should be installed by the electricians supplemented by instrument fitters to do the tubing work. Instrument mounting stands and supports should be standardized.

Instruments should be factory-calibrated by the vendor and have certification papers shipped with the instrument, so they do not require field bench testing.

The DCS should be delivered and installed as soon as the main control room and equipment room are ready. Most, if not all, of the loop checks and functional checks will be performed from the DCS control console(s).

15.2.10 Roads

Temporary roads shall be provided to all areas of the construction site. Roads that will have light vehicle (cars and pickup trucks) traffic should be 16 ft wide with a 3–4 in. thick layer of stabilized material crowned along the centerline of the road. Roads that will have heavy construction equipment traffic (RT cranes, trailers, flat-bed trucks, and so on) should be 20 ft wide with a 6 in. thick layer of stabilized material. Heavy haul roads for towers and other large/heavy equipment items should be 24 ft wide, 8–10 in. thick, and have no sharp turning radiuses.

15.2.11 Field Fabrication Yard

A field fabrication yard is required for the fabrication of large vessels (absorbers and stripper), large tanks, and flue gas ductwork. The FEED study has allocated an approximately 152 m x 152 m area north of the PCC plant for this purpose as shown in the plot plan, 26301-000-P1-0010-00002, in Appendix E.

15.2.12 System Turnover and Construction Completion

When overall construction is approximately 70–75% complete, the focus changes from construction by area to completion by system. By this time, the civil and structural work is substantially complete, the equipment is set, and most of the large-bore piping is installed. The construction group should start turning over systems to the startup group for commissioning after their

mechanical completion in accordance with the system turnover schedule.

As the piping installation, hydrotesting, and equipment erection are completed and the density of craft personnel and construction equipment is reduced within each area, the balance of the painting and insulation work is completed. The pipe and duct racks are completed first, followed by the process and utility areas. After the equipment and piping have been installed, the final road paving, site grading, and cleanup are done. The temporary construction facilities are demobilized progressively as they are no longer needed.

15.3 Constructability Reviews

A construction representative was assigned to the PCC plant FEED study and constructability reviews initiated. The construction representative provides early detailed construction planning in coordination with engineering design and procurement activities. Front-end construction planning is the start of the constructability program that addresses and incorporates the following:

- Safety
- Quality
- Timely completion
- Productivity
- Environmental
- Cost-effectiveness
- Operability
- Maintainability
- Reliability
- Special project concerns

The construction schedule and details in this chapter are based on the constructability review that was jointly done for this FEED study by construction and engineering groups. This front-end planning and integration of construction knowledge and experience into the planning, design, and engineering process are the greatest benefits of the constructability program.

Constructability review considered the delivery dates of the equipment for the construction sequencing and ensured that sufficient space is available to set each heavy lift.

Constructability reviews performed for the heat recovery steam generator (HRSG) stack tie-in determined that the limited four-week outage window would not be sufficient to complete the tie-in scope of work unless some of the construction activities are performed prior to the outage.

Constructability reviews performed to ensure that no operational disruptions occur from working within the operating NGCC during pre-outage construction led to the decision to use a mix of stick-build and pre-assembly approach as the preferred construction method.

Another key constructability issue related to the stack tie-in is the ability to isolate the flue gas ductwork system upstream of the absorber towers. An evaluation of the potential impacts to construction led to the decision to ensure that the guillotine dampers are installed during the pre-outage scope of work. The dampers are installed and tested pre-outage to ensure that the flue gas can be isolated once the tie-in is made. This permits construction and testing activities to continue on all equipment downstream of the dampers.

The identification of installation dates for the absorber and stripper towers allowed the rigging sequence for related ductwork and pipe racks to be established.

After the absorbers and stripper towers are set, the installation of large-bore pipe commences. An important constructability issue is crane access around the towers during pipe installation. Therefore, areas with restricted access are a primary focus early in the piping phase.

The compressors are long-lead critical equipment. Constructability reviews revealed that the building design needs to accommodate late delivery of the compressors. Compressor sections are transported into the building through the roll-up door and rigged onto the foundation. This approach permits the bulk of the building to be constructed without the compressors.

15.4 Construction Plan

The construction scope is subdivided into two construction areas:

- PCC plant
- Modifications within the Sherman NGCC plant

Before the construction starts, a security barrier between the operating power plant and the PCC plant should be established.

A high-level construction plan for these two areas is described next and shown in the storyboards attached at the end of this chapter in Figures 15-4 to 15-38.

15.4.1 PCC Plant

Mobilizing will occur with a small construction team before the earthwork subcontractor is on-site. Clearing, grubbing, and site grading are done first. In addition, the fabrication yard, laydown area, and parking lot should be prepared at this time. Major civil activities can then commence. Initial focus should be the fire water loop, cooling water pipe, stormwater pipe and catch basins, potable water, electrical trenches, and other underground utilities. All pipe testing should be performed prior to backfilling. The electrical trenches are candidates for pre-casting. Trenches underneath the road crossings should be designed for HS-20 loading.

As underground pipe backfilling progresses away from the flue gas blowers and absorber tower areas, FREP activities for the blowers, transformers, electrical building, and pipe and duct rack foundations can commence.

The footers for the pipe rack should be designed to permit a self-propelled motorized transporter (SPMT) to deliver a modularized pipe rack section between the footers as well as setting of the rack columns directly over the anchor bolts. The modularized rack temporary bracing will be designed to permit unrestricted removal of the SPMT after setting the rack.

Absorbers and stripper foundations will be next. Utilizing pre-assembled rebar cages, pre-assembled forms and anchor bolt templates will help accelerate these activities. Absorbers and the stripper tower are two largest pieces of equipment, and their completion is critical to meeting the construction schedule. Therefore, preparation of these foundations is a key milestone activity.

When the blowers, absorbers, and stripper foundations are complete, FREP activities will shift to foundation work for the reclaimer, amine storage tank/sump pits, control building, area slabs around the stripper, and compressor building. In parallel, erection of the electrical building commences and installation of equipment arriving at the site, such as the transformers and blowers, will start. (See Figures 15-11 to 15-14, Months 15–18, later in this chapter.)

Installation of the duct rack and pipe rack steel can also start at Month 18; however, some of the areas will have to be kept open for crane movement and to move absorbers and the stripper from the fabrication yard to their foundations. Certain equipment foundations that might interfere with equipment movement will also be left out for later installation.

With the foundations ready, absorbers and the stripper can be installed as soon as they are ready. The absorbers and stripper vessels will arrive at the site in large sections that can be transported via road and fabricated and tested at the site. Installation of tower access platforms/ladders and riser piping will be candidates for ground assembly. The degree of assembly will depend on the crane plans. Detailed crane rigging plans are to be as design matures.

The stripper and Absorber #2 will be installed first using a heavy lift crane and tailing crane followed by Absorber #1. The heavy crane will be in the area between the two absorbers as shown later in Figure 15-15, Month 19. Smaller cranes for steel erection are not shown and will be positioned as required.

After the absorber and stripper vessels are set on their foundation, installation of the internals and the equipment around the absorbers and stripper such as the reclaimer can begin. The frame around the stripper will require stick-building. The frame supports the reboilers, overhead condenser, and reflux drum. The equipment will be inserted onto the platform frame during steel erection. Following steel erection, the installation of large-bore piping and electrical will start.

The lean amine and amine solvent tanks are field-fabricated and can be installed when the foundation for these tanks is ready.

Erection of the compressor building and control room/workshop building will continue in parallel with equipment installation throughout the site. Critical path for the compressor building and the project will be the delivery of the CO_2 compressors. The long lead delivery time of the compressors will require work-arounds within the compressor building area. All auxiliary equipment and most piping and electrical work will progress until compressors have been delivered on-site. Any leave-out piping will be completed when the compressors arrive.

15.4.2 Modifications Within the NGCC -Plant

Construction activities within this zone should be performed only after proper coordination and approval of plant personnel.

The main scope within this area is the utility tie-ins and routing of these utilities through the power plant to the PCC plant boundary. Because this work will be performed in an operating power plant, the construction approach will require different methodologies than PCC, and the tie-ins should be made with minimum disruption to plant operation and without damaging the plant equipment.

Much of the routing of the utilities between NGCC and PCC will be completed during the PCC construction work and does not require an outage.

The tie-ins are described in Chapter 5 of this report. The critical tie-ins are as follows:

- At the two flue gas stacks: for diverting the flue gas to the carbon capture plant
- At the cross-over pipe between the IP and LP turbine: to provide LP steam to the PCC plant
- At circulating water line: for supply and return of cooling water between the power plant and PCC users
- At the 138 kV and 4.16 kV power supply lines from the power plant to PCC plant
- At the fire water underground loop: to connect the PCC plant fire water underground loop at two locations

Stack Tie-In

Construction of the tie-in must be completed during the designated four-week outage windows. Therefore, the key factors from a constructability standpoint will be to minimize the scope of work required during this time. This should be achieved by planning and scheduling most work surrounding the stacks as pre-outage work as described next. Impact on the operating plant will also be minimized by modifying one stack at a time so that the power plant can operate at least at reduced load during this period.

The first priority should be to identify any equipment adjacent to the stack that will require relocation. Determination of all available options needs to be made during the detailed design, for example, the proximity between the CGMS buildings and HRSG chemical feed system with the new support structure for the stack. These buildings and/or equipment may have to be permanently relocated or temporarily shifted during the construction. In addition, if any underground utilities interfere with the new installations, they may require temporary or permanent rerouting. An added concern that will impact constructability is the limitation of loads on existing undergrounds. Crane selection will be influenced by load limits as well as access restrictions.

During the pre-outage civil phase, localized excavations and FREP activities for the stack support structure foundations, damper support foundations, and ductwork support foundations should be performed. These excavations should be evaluated for earth retaining/support systems and access restrictions created for plant operations determined. Excavation equipment should be selected with load limits and access restrictions in mind. All surveying and site control work will use a project-specific coordinate system transposed from the existing plant monument system.

After the civil foundation work is accomplished, structural steel erection should commence. The pre-outage phase should include erection of the stack support structure. A constructability review of the erection sequence indicates that the lower elevations of this steel may necessitate stick-building. Large pre-assembled sections will be difficult to maneuver around the operating equipment on the south side. Stick-building the lower elevations will help minimize any safety risks. At elevations above the existing equipment, pre-assembled sections could be considered. Manlifts should be used to the extent possible to minimize congestion created by scaffolding. On the north side of the HRSG stack, temporary removal of the existing stair tower should be evaluated. Detailed design will determine if stair tower removal is required. After the flue gas tie-in structural framing is completed, the steel will be torqued down in preparation for the seat connection to the stack. During the four-week outage, the structural seat connection supports will be welded to the stack wall.

Along with the stack support structure, the guillotine duct dampers are critical pre-outage installations. These isolation dampers will isolate the flue gas when the stack tie-in is complete in the upstream section and allow continuation of ductwork construction up to the PCC plant when the outage is completed. Isolation dampers

must be tested for leak-tightness prior to restarting the power plant unit.

Construction shall coordinate with the plant operations group to address the safety hazards and constructability challenges associated with erecting over the top of or near existing equipment. A detailed rigging execution plan should be prepared for each of these scopes of work.

When all pre-outage construction activities are completed, the focus will shift to preparation for the outage scope of work. The outage activities should follow a 24/7 schedule in the following sequence.

After shutdown of the Sherman NGCC plant, the seat connection supports for the flue gas tie-in structure will be installed and welded to the exterior stack wall. Once completed, the new structure will support the upper stack loads. This will permit breaching of the east side of the stack wall.

At this point, cutting for the new gas path holes will commence. Templates will be used to mark the locations of the gas path holes (approximately 80), and the holes will be flame cut. A rigging plan will be prepared to safely remove the cut sections down to grade. In parallel with the cutting operation, welding of a new frame for the ductwork transition piece will commence. The frame will be a welded connection to the stack and a bolted connection to the ductwork. In parallel with the cutting operation, welding of the new frame for the ductwork transition piece will commence.

When the frame has been welded, the new transition piece will be rigged into position between the stack frame and the guillotine dampers. The transition piece will be connected via bolts to the stack frame and temporarily supported until the last section of duct is installed. When the last section of duct is installed and all testing completed, the outage scope is considered complete. The guillotine dampers will serve as the isolation point between the operating power plant and CO_2 plant construction.

LP Steam Pipe Tie-In

LP steam pipe tie-in will be done during one of the two stack tie-in outages. A complete plant outage will be required during this period, so minimization of downtime is critical. To reduce downtime, new cross-over piping is assumed in the FEED rather than modifying the existing. The EPC contractor must ensure that all material in turbine supplier (Siemens') scope such as the new cross-over piping, backpressure valve, and instrumentation is available at the site before this modification is started. Modifications of the turbine controls and DCS will be done by Siemens.

Circulating Water/Cooling Tower Tie-In

Tie-in to the circulating water system will also require a complete plant outage and should be done at the same time as the LP steam piping tie-in to the cross-over piping to avoid an additional outage. All pre-outage activities possible should be completed to ensure that tie-ins can be made within the allocated duration. The exact tie-in scheme, including modification of the existing forebay will be decided during the pilot plant phase.

Power Supply Tie-Ins

The high-voltage tie-ins at the power plant switchyard (138 kV) for installation of the new ring-bus breaker and the electrical switchgear (4.16 kV) connection should also be done during the LP steam tie-in because the power plant will be in outage.

Fire Water Tie-In

The existing power plant fire loop has isolation valves so that the section of the fire loop where the tie-ins would occur can be isolated. Because of this, the tie-ins do not require a power plant outage and can be done any time after the PCC fire loop piping has been installed.

15.5 Commissioning Approach

Once a system is mechanically complete, the construction group turns the process over to the startup group to begin cold commissioning. A system's acceptance by Startup constitutes its mechanical completion and indicates that it is ready to be commissioned.

The startup group is part of the EPC contractor's team and includes specialized technicians. If any design-related issues are discovered during commissioning, they are resolved by the engineering group. If physical modifications to the system are required, they will be made with the help of the construction team.

15.5.1 Cold Commissioning

Once a system has been accepted by Startup, it is green-tagged and cold commissioning activities begin, followed by hot commissioning and startup. This is generally known as the *startup phase*. The EPC contractor should have a manual that describes the startup process, including administrative and technical procedures, detailed commissioning schedule, organization chart, and definition of the subdivision of the plant into discrete portions to facilitate phased turnover from Construction to Startup.

The cold commissioning phase is sometimes referred to as *pre-commissioning*, *construction completion*, or *pre-op*. Tests and checks conducted in this phase are done before the process fluids are introduced in the system. Typically, this phase of execution follows system/component turnover from Construction but may vary depending on contract requirements. Activities in this phase are typically executed by Startup personnel; however, some may be executed in the construction completion phase by other experienced testing personnel knowledgeable of startup processes and procedures. Support labor for these activities may be subcontractors, Construction, or Startup direct, depending on project execution plan.

Standard test and commissioning procedures (STCPs) should be used to perform cold commissioning in a manner compliant with any owner's requirements.

Permanent plant operations personnel assist with cold commissioning activities, which provides them with their initial on-the-job training (OJT).

In addition to planning and scheduling, Startup should perform the following tasks during this phase:

1. Monitor pre-commissioning activities.
2. Inspect construction records.
3. Check equipment/systems, and prepare preliminary punchlists.
4. Verify that mechanical completion checks have been performed.
5. Prepare all necessary inspection records and test certificates; ensure that all documentation is in place to allow systems to progress to the commissioning phase.
6. Generally, expedite the transition from pre-commissioning to commissioning.
7. Monitor vendor representative activities so that personnel are used efficiently and contribute effectively to the vendor training program, both in the classroom and in the field.
8. Perform final inspection of vessels and other equipment internals on a selected basis, and close and leak-test such vessels and equipment where applicable. (Final inspection of some vessels may take place in the initial stage of the commissioning phase.)
9. Perform final cleanliness inspection prior to closing key piping.

Figure 15-1 lists typical activities undertaken during cold commissioning along with the applicable STCPs.

	5	6	7	8	9
A		Install temporary commissioning test equipment as required	Complete preparations for flushing, chemical cleaning, and steam and air blows	Perform flushing, chemical cleaning, and steam and air blows	Install all orifice plates
B	Calibrate and test instruments	Initially energize and test control loops		Stroke control valves/dampers and so on	
C	Install temporary pipe for flushing and cleaning	Perform API valve tightness test		Inspect temporary strainers and differential gages	Perform equipment oil flushes
D	Schedule vendors for functional testing	Load catalyst and chemicals and close up	Provide chemistry consulting services	Load initial charge of resins, filter media, chemicals, and so on	Make all support utilities available
E	Calibrate/test meters, relays, CTs, PTs, and secondary circuits	Perform additional cable and equipment hi-pot/megger tests as required	Test power transformers and major electrical equipment	Initially energize major power supply systems, including phase checks	
F			Bump motors for rotation	Run-in and vibration test motors uncoupled	Couple rotating equipment
G	Check out and perform in-service test of control room HVAC	Power up DCS	Complete preparations for process system high-pressure leak tests		
H	Set MOV torque switches, and adjust limit switches	Electrically operate MOVs	Remove and set safety relief devices	Perform required maintenance on equipment and systems	Complete the data sheets and test records
J		Manage the clearance and safety tagging program	Complete insulation and painting	Identify design problems to Engineering for resolution	Remove all scaffolding and combustible materials

Figure 15-1

Cold Commissioning Activities

15.5.2 Hot Commissioning

Once cold commissioning is finished, plant startup enters the hot commissioning phase. System testing and integrated system testing on fluids are performed in this phase, and systems are placed in service to support overall plant startup. Carried out by the startup group, hot commissioning is essentially a seamless phase transition in the plant's startup with respect to administration of the safety lock-out program and the care, custody, and control of the equipment and systems.

Permanent plant operations personnel assist with hot commissioning activities, which provides them with the primary part of their OJT. During this time, these operators are expected to operate plant systems safely and efficiently as directed. Responsibility for hot commissioning rests with the startup group, augmented by field engineering, safety, and maintenance personnel as well as permanent plant operations personnel.

Plant equipment and systems are made ready to receive combined heat and power, CO_2 amine solvent, and other chemicals to process flue gas during hot commissioning.

Arranging for vendor service/startup representatives for major equipment at the appropriate times is a critical function during this phase. These activities also include the following:

- Performing initial charging of solvents and chemicals
- Performing system functional checkout
- Cleaning and checking temporary strainers during initial circulation or fluid flow operations
- Checking and testing hazard detection, firefighting, and other loss-prevention systems and equipment
- Ensuring that documentation is in place to allow a system to progress to the operation phase
- Supervising and directing permanent plant personnel in startup, testing, maintenance, and operation activities until turnover (these personnel are used only in ways consistent with staff position and responsibility)
- Performing formal system walkdowns before startup, with appropriate prior notifications
- Preparing and submitting system turnover packages to the owner, as scheduled. As a minimum, these packages consist of the following:
  - General
    - Turnover package and section indices
    - Copy of not-yet-incorporated design change notices (DCNs)
    - Punchlist
    - Copy of system and specialty commissioning procedures that contain recorded data or sign-off
  - Mechanical
    - Current red-line, as-built, approved boundary piping and instrumentation diagrams (P&IDs)
    - Hydrostatic test records
    - Pipe cleaning records (flush, blow, chemical cleaning, and so on)
    - Safety/relief valve field setting record
    - Coupling alignment records (with and without pipe attachment)
    - Driven equipment data sheets
    - Vibration data sheets
    - Drive turbine data sheets
  - Electrical
    - Approved, highlighted schematic wiring diagrams or cable schedule indicating completion of proper cable checkout
    - Block diagram(s)
    - Busbar torque data
    - Electrical scheme test data sheet
    - Termination/continuity record
    - Cable test record
    - Motor data sheets
    - Motor-operated valve (MOV) data sheets
    - Battery data sheets
    - Megger data sheets
    - High-pot test data sheets
    - Switchgear test records
    - Transformer test records
    - MCC test records
    - Earth loop impedance test records
  - Instrumentation and control
    - Calibration sheets
    - Loop test records
    - Control logics/diagrams
    - DCS interface drawing
    - DCS configuration diagram
    - As-built setpoints, alarms, and trips
    - Level setting drawings
    - DCS input/output (I/O) list highlighted to reflect verified I/Os
    - Instrument index
  - Operation and maintenance
    - Lubrication records
    - Construction/storage phase records
    - Maintenance/lubrication/heating records

    - Startup phase maintenance and lubrication records
    - Vendor service engineer's reports
- Administering and conducting system walkdowns in preparation for turnover

Before the scheduled turnover date—and allowing sufficient time for review—the startup-to-customer turnover package is submitted for acceptance. The turnover package typically includes those items listed above plus the startup-to-customer system/facility turnover form, identifying the items being turned over. This form is completed and properly signed by the responsible personnel. Signatures indicate the following:

- The project startup manager's signature signifies that the system/facility testing is complete to the extent that it is ready for operation and that exceptions are listed on the punchlist.
- The customer's, or customer designee's, signature indicates turnover acceptance of the system/facility, including any exceptions noted.

Punchlists are updated to show the current status of turnover exceptions. Each exception item that has been completed before turnover is signed as complete by the responsible personnel. Each exception that is not completed before turnover has an estimated completion date and responsible party entered on the form. The form is included in the turnover package.

The customer reviews the turnover package for completeness, accuracy, and exception status. If the turnover is acceptable, the facility manager indicates acceptance by signing the startup-to-customer system/facility turnover form transmitted with the package and distributes a signed copy to the project startup manager. If a turnover is not acceptable, the turnover package is returned to the project startup manager with a written explanation of why the turnover was rejected.

Upon receiving the signed copy of the startup-to-customer turnover form, Startup removes green turnover tags and replaces them with blue tags if the blue tag process is being used by the project. If the blue tag process is not being used, the green tags remain in place until the customer takes care, custody, and control of the facility.

Figure 15-2 lists typical activities undertaken during hot commissioning along with the applicable SCTPs. Figure 15-3 provides a basic schedule of aggregate commissioning and startup activities.

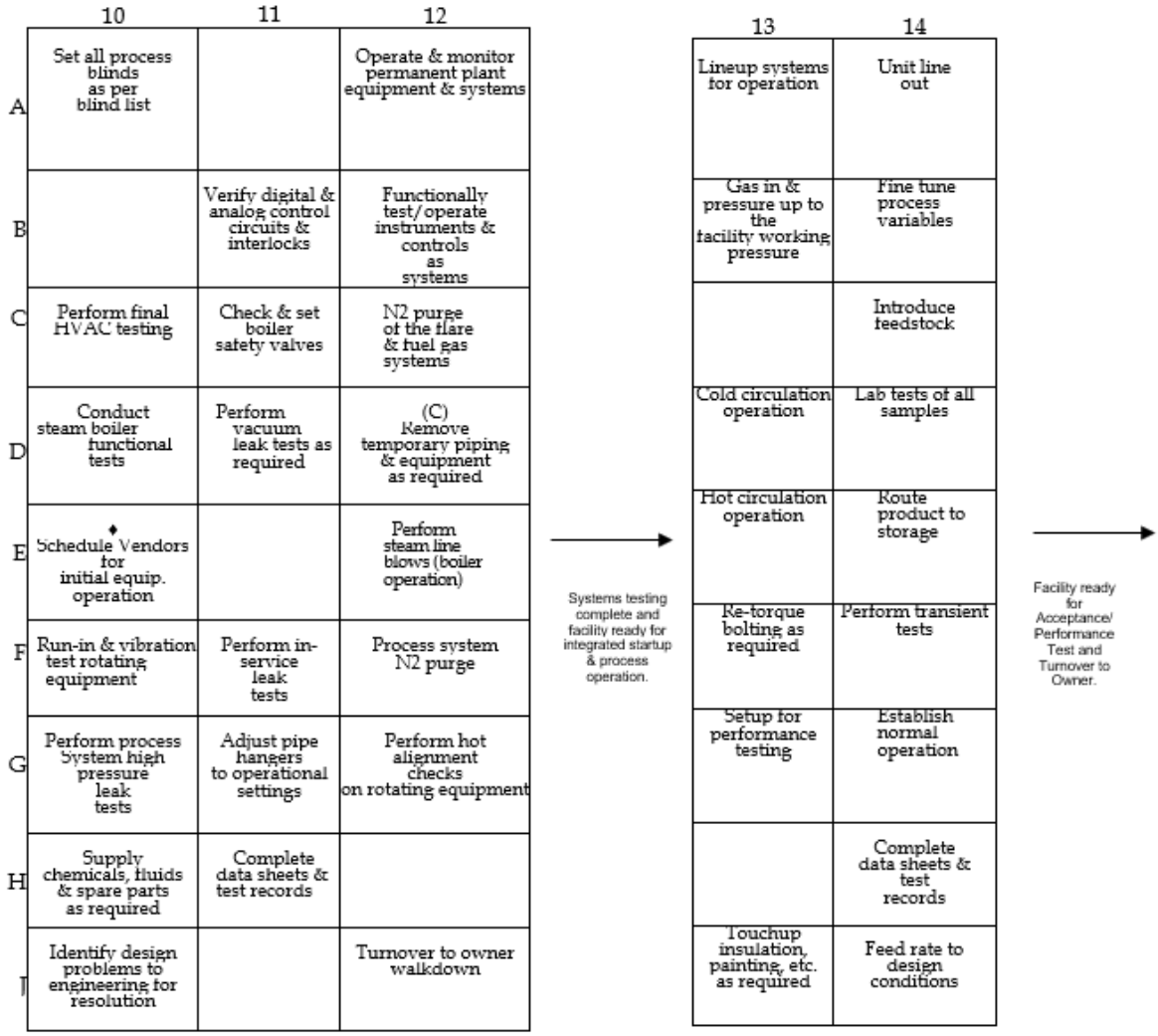

Figure 15-2

Hot Commission Activities

Phase	System	Duration (Days)			MONTH 1					MONTH 2					MONTH 3					MONTH 4					MONTH 5					MONTH 6				
	Overall Schedule	**183**																															
COLD	Checkout High Voltage	**30**																															
COLD	DCS Control System Checkout	**183**																															
COLD	**ENERGIZE**	**1**																															
COLD	Checkout Medium and Low Voltage Distribution	**60**																															
COLD	I/O and Loop Continuity Check	**124**																															
COLD	Panel Checks	**30**																															
COLD	**ELECTRICAL AND I/O CHECK**																																
COLD	Motor Runs/Pump Checks	**42**																															
COLD	Piping System Flush	**30**																															
COLD	Fan and Compressor Lube Oil Flush	**30**																															
COLD	Alkaline Flush of Amine Path	**30**																															
COLD	Restoration	**7**																															
COLD	**MECHANICAL CHECK AND SYSTEM FLUSH**																																
HOT	Recirculate Amine Loop on Water	**7**																															
HOT	ID Fan Run on Cold Gas/Open Damper	**14**																															
HOT	Initial Pump Runs	**30**																															
HOT	Initial CO2 Compressor Run on Air	**5**																															
HOT	Fire CCPP if not already operating	**1**																															
HOT	Load Amine to System/Recirculate	**3**																															
HOT	First Flue Gas to Towers	**1**																															
HOT	Steam to HX and Amine Warmup	**7**																															
HOT	***First CO2 to Pipe Line***	**14**																															
HOT	***Tune and Test Period***	**30**																															
HOT	***HOT COMMISSIONING***																																
	Target Complete - T/O to Owner	**1**																															

Figure 15-3

High-Level Schedule of Commissioning Activities

15.6 Schedule Overview

An overall project schedule was developed during the FEED based on delivery schedule of the equipment received from the vendors in budgetary quotes. The schedule is attached at the end of this chapter as Figures 15-4 and 15-5. The schedule assumes that there will be no delays caused by the owner and that power plant outages will be according to the schedule to support the tie-ins.

15.6.1 Key Schedule Durations

Based on the schedule, the key schedule durations after completion of pilot plant testing are as follows:

Milestone Description	Months from NTP
NTP	0
Site mobilization	9
First concrete	12
Compressor delivery	22
Energization	23
Absorbers installation completion	25
Project target completion	28

15.6.2 Critical Path Activities

The critical path begins with initial system engineering. This leads to preparing the specification for the compressor and continues with bidding, evaluating, and awarding (BEA) the compressor. The compressor is the long-lead-time item based on delivery schedule received during the FEED; however, market conditions may change—and it is likely that the absorbers and stripper will become the critical path. Similar to the compressor, the path will begin with initial engineering, preparation of specification, and the BEA cycle. The path continues with fabricating, delivering, and setting the columns and installing the column internals.

The path then follows through pre-commissioning and concludes with project completion at the end of hot commissioning.

15.6.3 Schedule Basis and Assumptions

Schedule is based on a mix of a modular and stick-built construction approach. Equipment lead times are based on budgetary quotes. Construction schedule development is based on equipment delivery schedule and storyboard analysis.

It has been assumed that power plant outages will be in accordance with the tie-in schedule.

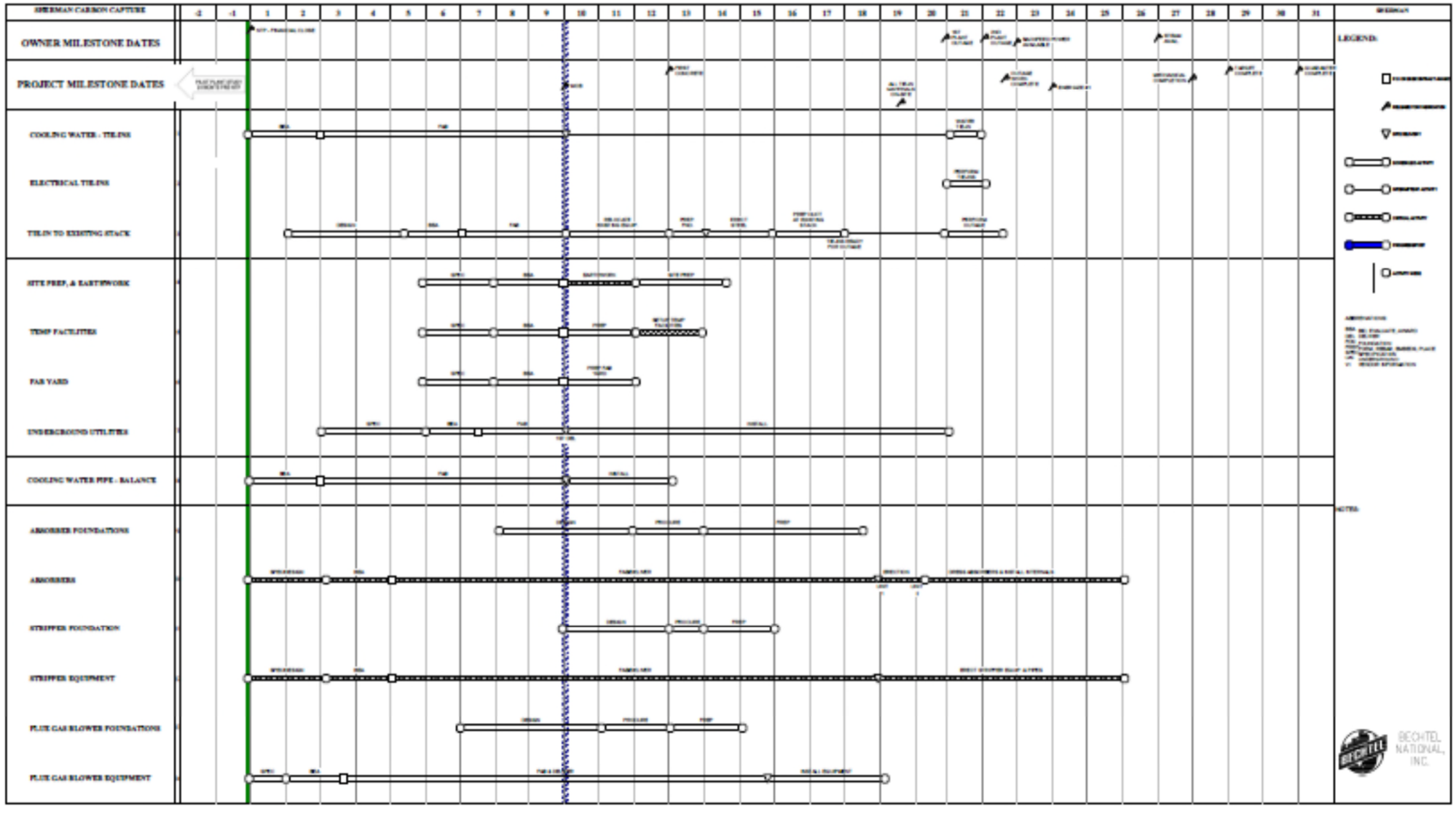

Figure 15-4

Milestone Schedule (Part A)

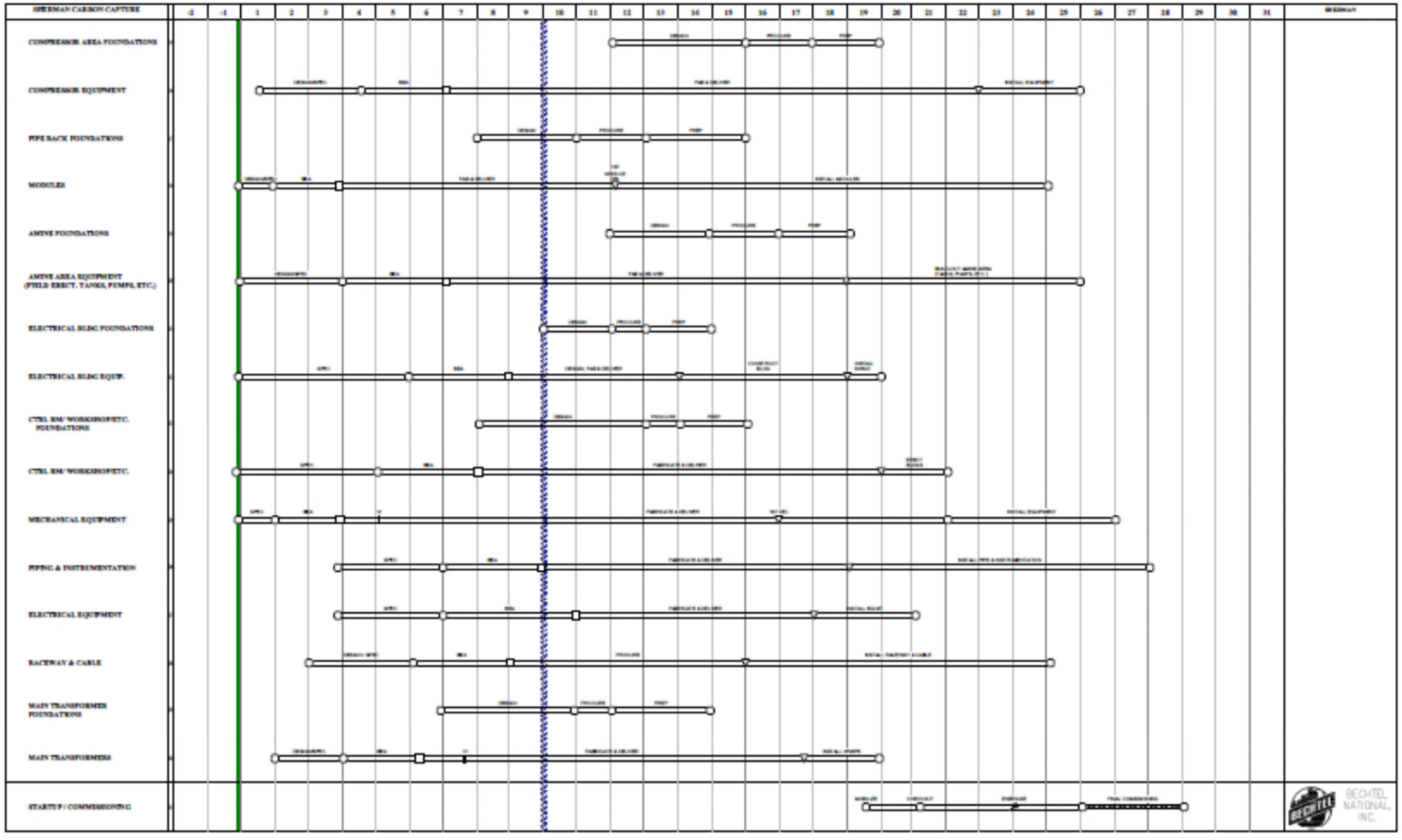

Figure 15-5

Milestone Schedule (Part B)

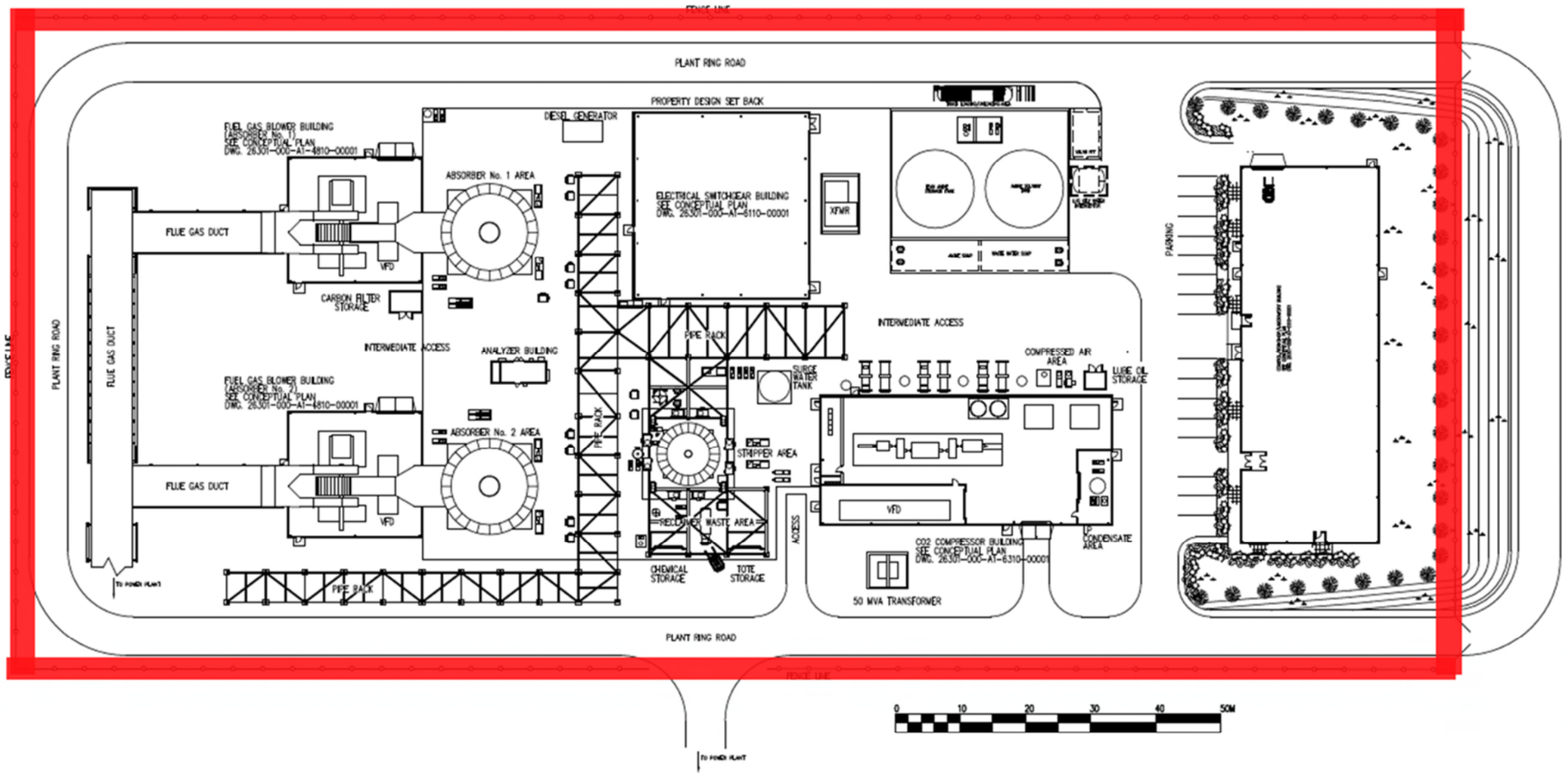

Month 10

Construction Activities:

- Site Mobilization
- Security barrier
- Setup Site Offices
- Establish Parking Lots
- Start Site Grading
- Prepare Fab Yard
- Start installation of storm water piping and catch basins

Color Legend

- Underground Utilities
- Mechanical Equipment
- Electrical Equipment
- FREP/Concrete
- Steel/Duct/Building Finishing
- Crane
- Security Barrier

Figure 15-6

PCC Plant Construction Plan (Month 10)

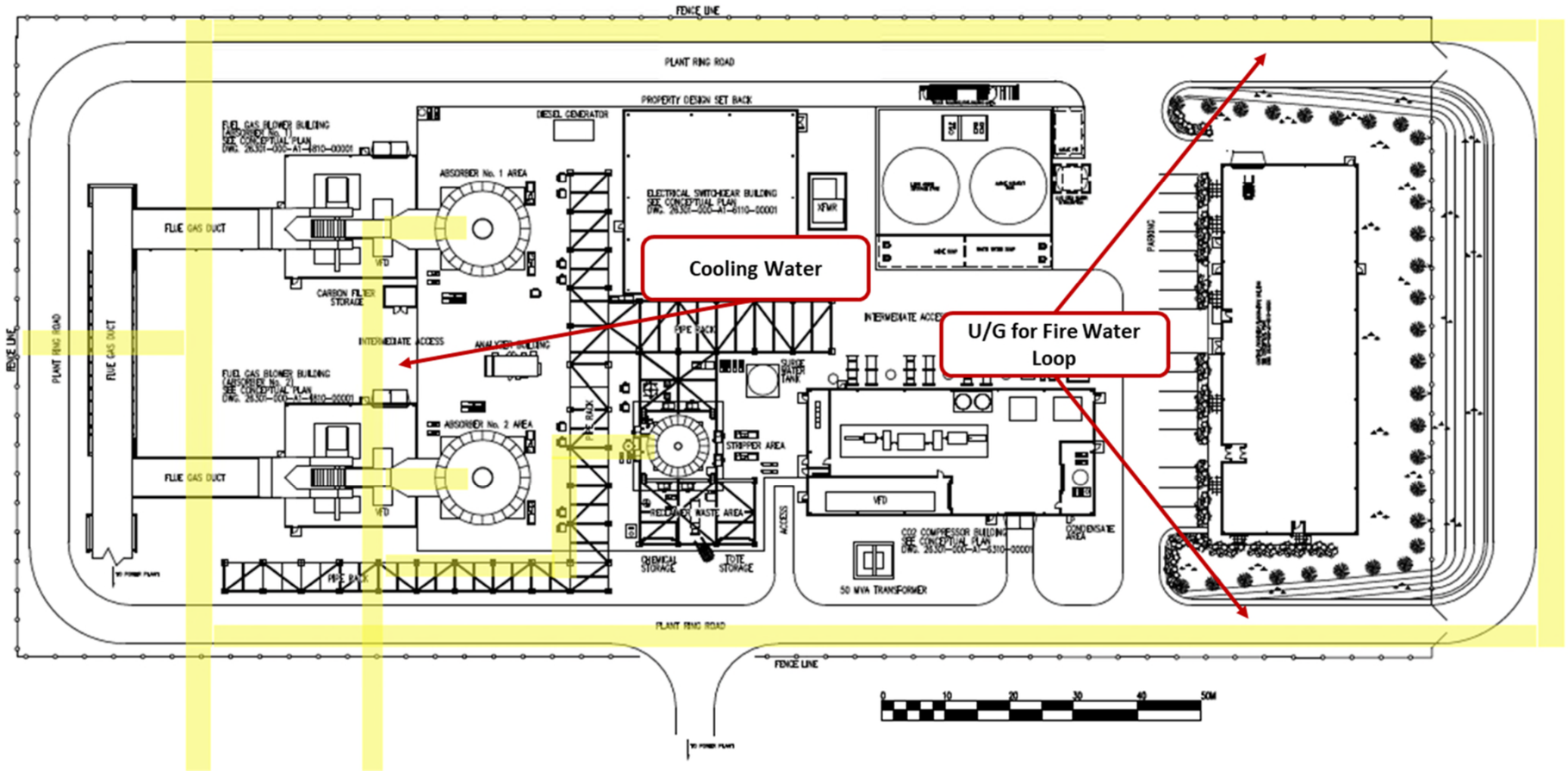

Month 11

Construction Activities:

- Setup Site Offices
- Establish Parking Lots
- Complete Site Grading
- Complete Fab Yard
- Complete installation of storm water piping and catch basins
- Start Cooling Water U/G piping (to various users not shown)
- CO2 lines, fire water loop, electrical grounding, potable water etc. (not all are shown)

Color Legend

- Underground Utilities
- Mechanical Equipment
- Electrical Equipment
- FREP/Concrete
- Steel/Duct/Building Finishing
- Crane
- Security Barrier

Figure 15-7

PCC Plant Construction Plan (Month 11)

Month 12

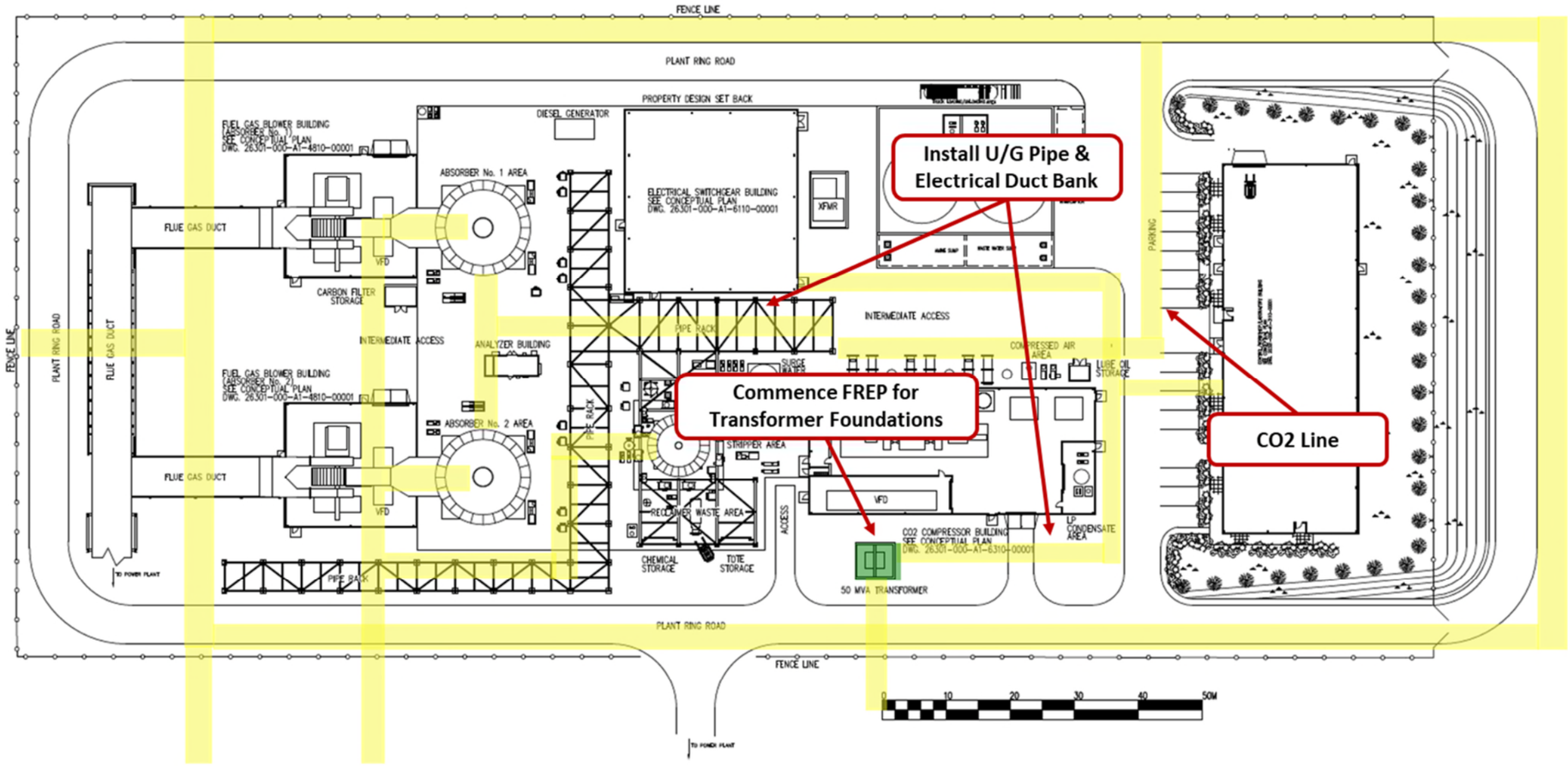

Construction Activities:

- Set up temporary facilities
- Finish installation of Cooling Water U/G piping (to various users not shown)
- Start Electrical duct banks (not all are shown)
- Commence foundation for main transformers
- Continue fire water loop, electrical grounding, potable water etc. (not all shown)

Color Legend

- Underground Utilities
- Mechanical Equipment
- Electrical Equipment
- FREP/Concrete
- Steel/Duct/Building Finishing
- Crane
- Security Barrier

Figure 15-8

PCC Plant Construction Plan (Month 12)

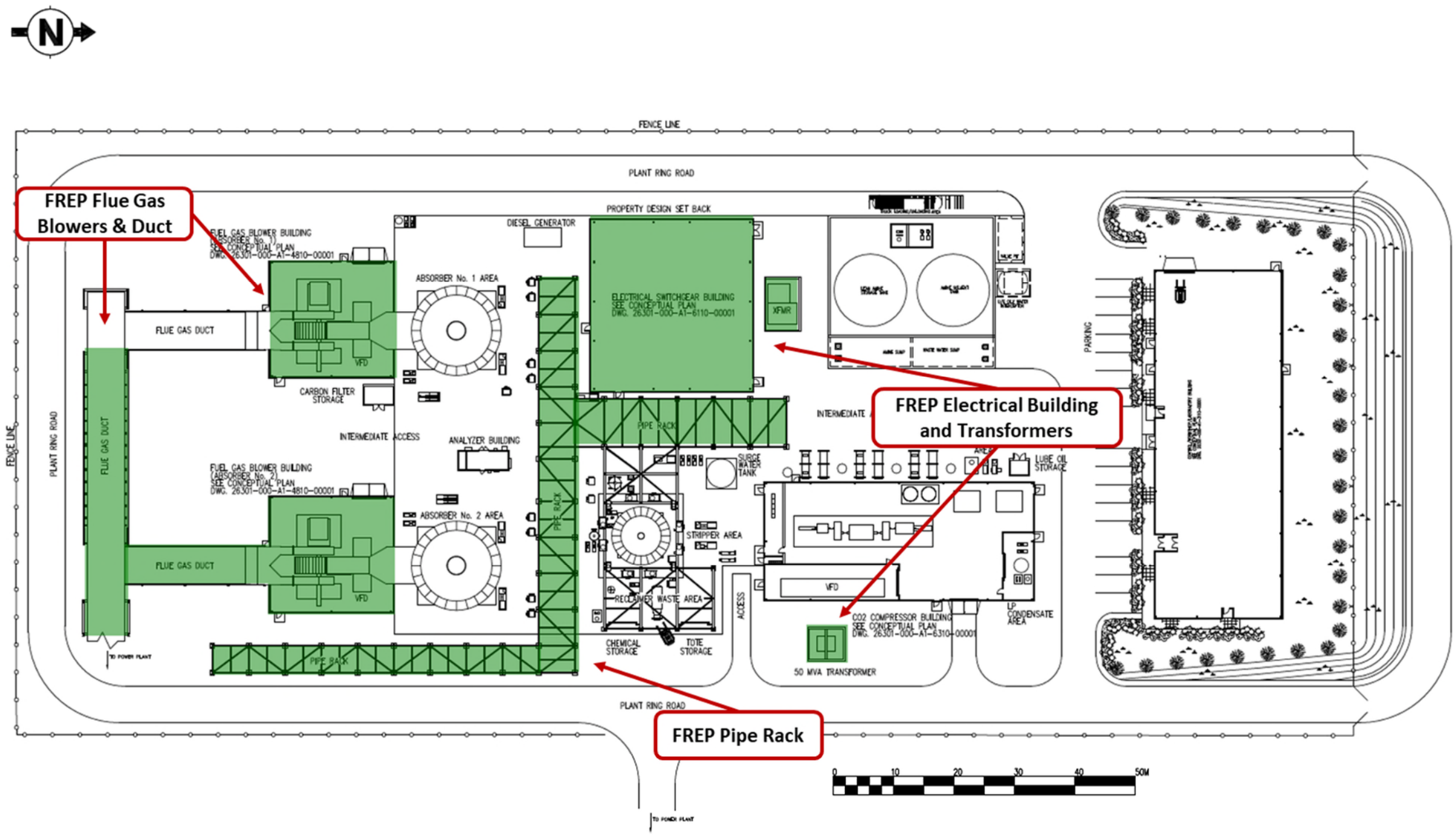

Month 13

Construction Activities:

- Finish mobilization activities
- Continue remaining U/G work
- Commence foundation for Flue Gas Blowers, Duct & Pipe Racks, and Electrical Building
- Continue foundation for Transformers

Color Legend

- Underground Utilities
- Mechanical Equipment
- Electrical Equipment
- FREP/Concrete
- Steel/Duct/Building Finishing
- Crane
- Security Barrier

Figure 15-9

PCC Plant Construction Plan (Month 13)

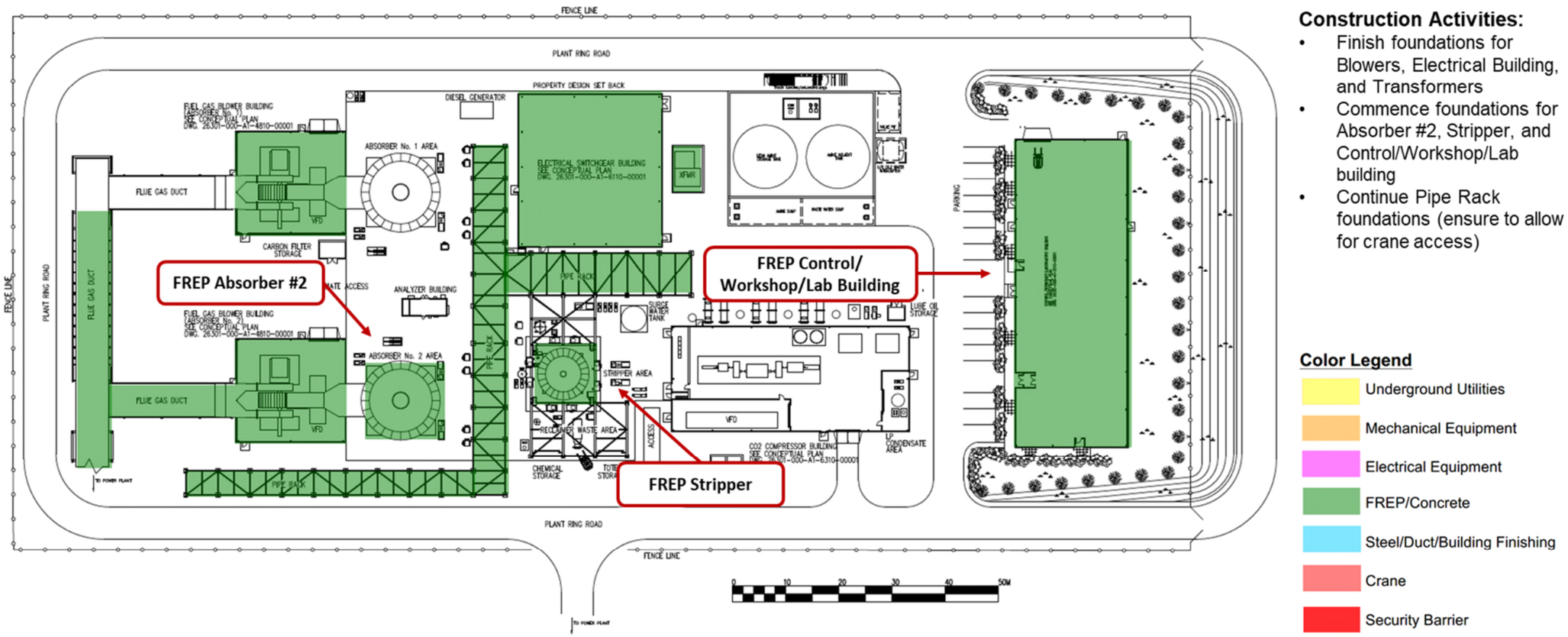

Month 14

Construction Activities:

- Finish foundations for Blowers, Electrical Building, and Transformers
- Commence foundations for Absorber #2, Stripper, and Control/Workshop/Lab building
- Continue Pipe Rack foundations (ensure to allow for crane access)

Color Legend

- Underground Utilities
- Mechanical Equipment
- Electrical Equipment
- FREP/Concrete
- Steel/Duct/Building Finishing
- Crane
- Security Barrier

Figure 15-10

PCC Plant Construction Plan (Month 14)

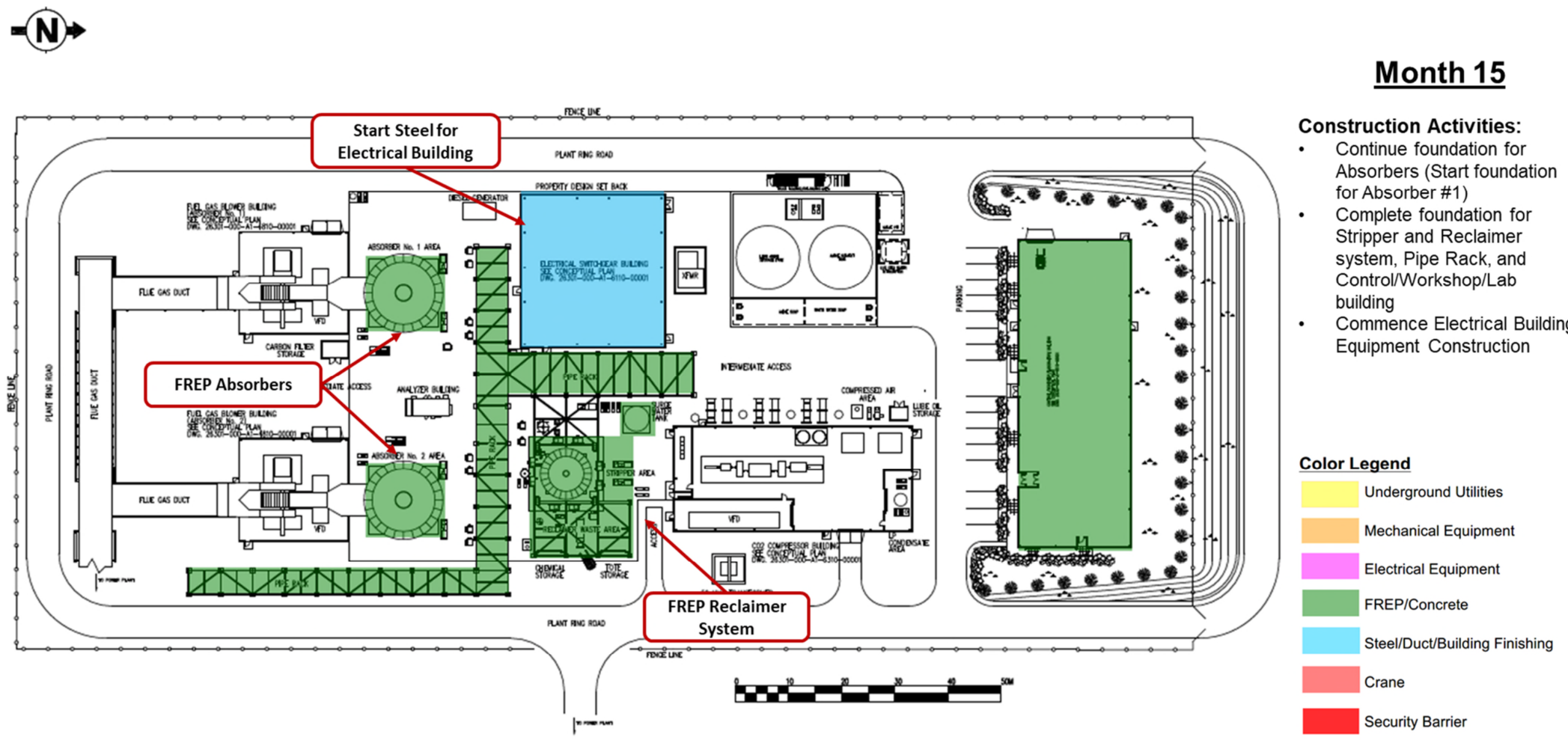

Month 15

Construction Activities:

- Continue foundation for Absorbers (Start foundation for Absorber #1)
- Complete foundation for Stripper and Reclaimer system, Pipe Rack, and Control/Workshop/Lab building
- Commence Electrical Building Equipment Construction

Color Legend

- Underground Utilities
- Mechanical Equipment
- Electrical Equipment
- FREP/Concrete
- Steel/Duct/Building Finishing
- Crane
- Security Barrier

Figure 15-11

PCC Plant Construction Plan (Month 15)

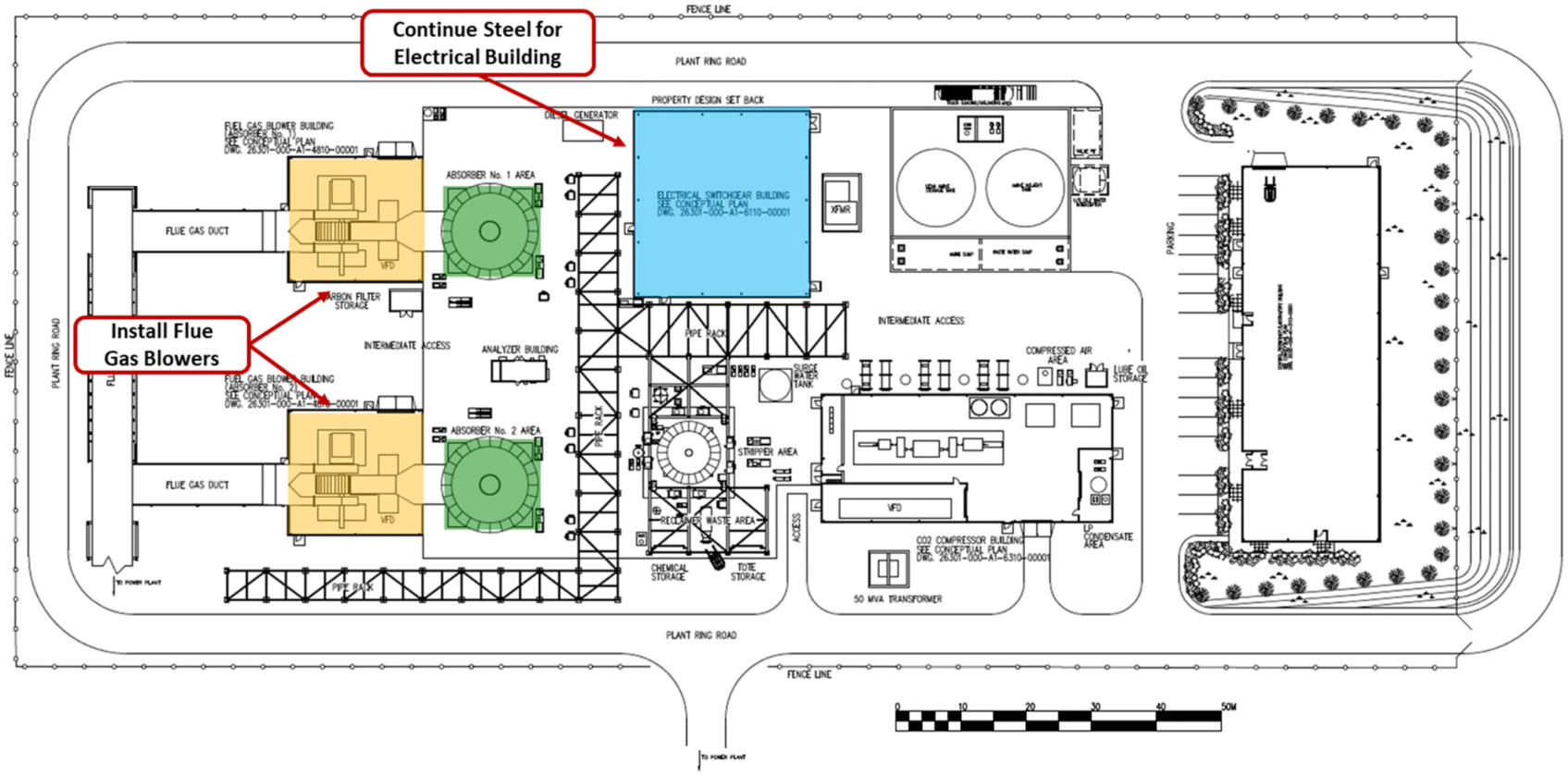

Month 16

Construction Activities:

- Foundations for Absorbers
- Commence installing Flue Gas Blowers
- Continue construction of Electrical Equipment building
- Foundations for amine storage area and compressor, will start if schedule permits

Color Legend

- Underground Utilities
- Mechanical Equipment
- Electrical Equipment
- FREP/Concrete
- Steel/Duct/Building Finishing
- Crane
- Security Barrier

Figure 15-12

PCC Plant Construction Plan (Month 16)

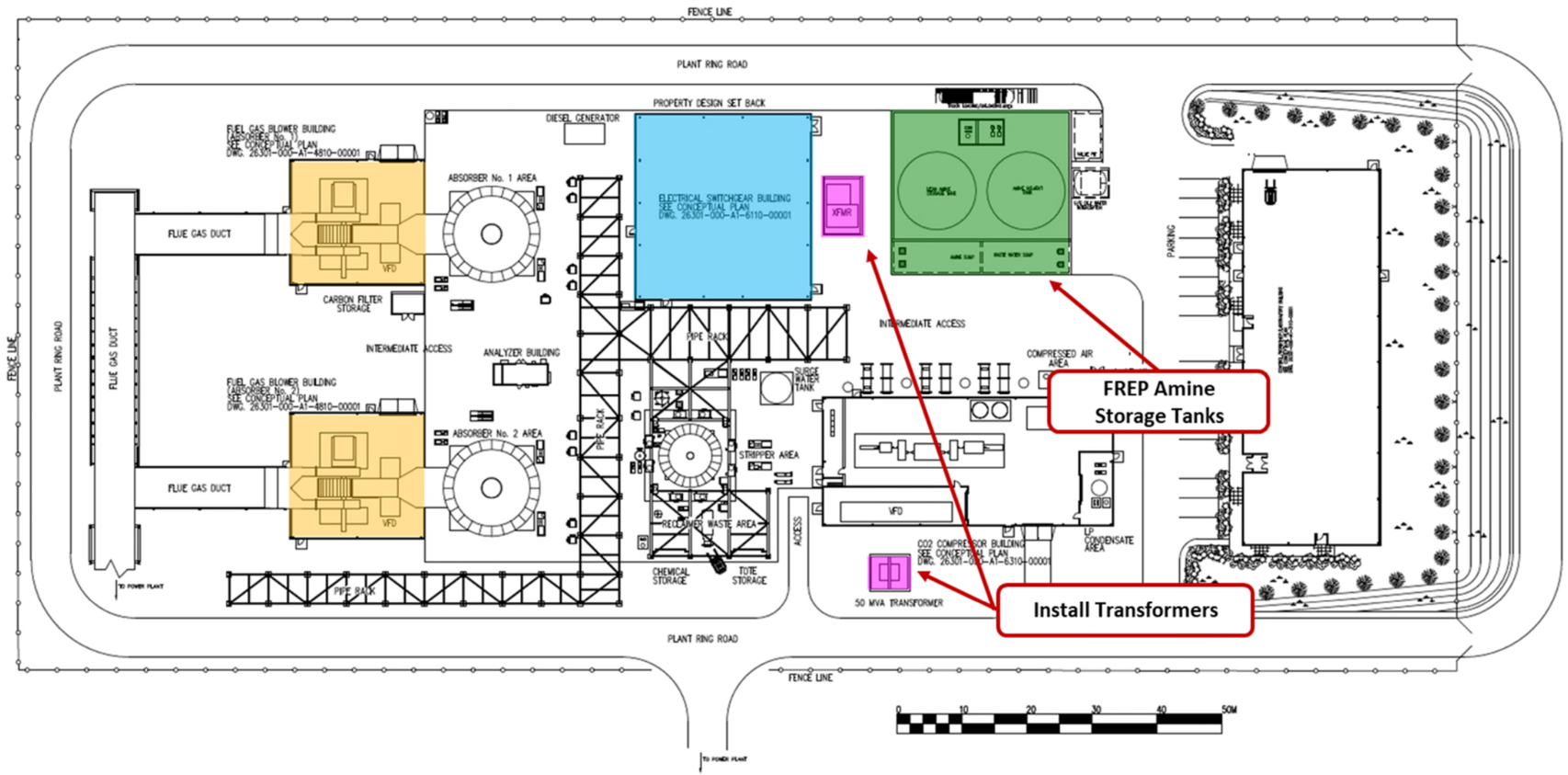

Month 17

Construction Activities:

- Continue setting Flue Gas Blowers
- Continue Electrical Building construction
- Commence installation of Transformers
- Commence Amine storage foundations

Color Legend

- Underground Utilities
- Mechanical Equipment
- Electrical Equipment
- FREP/Concrete
- Steel/Duct/Building Finishing
- Crane
- Security Barrier

Figure 15-13

PCC Plant Construction Plan (Month 17)

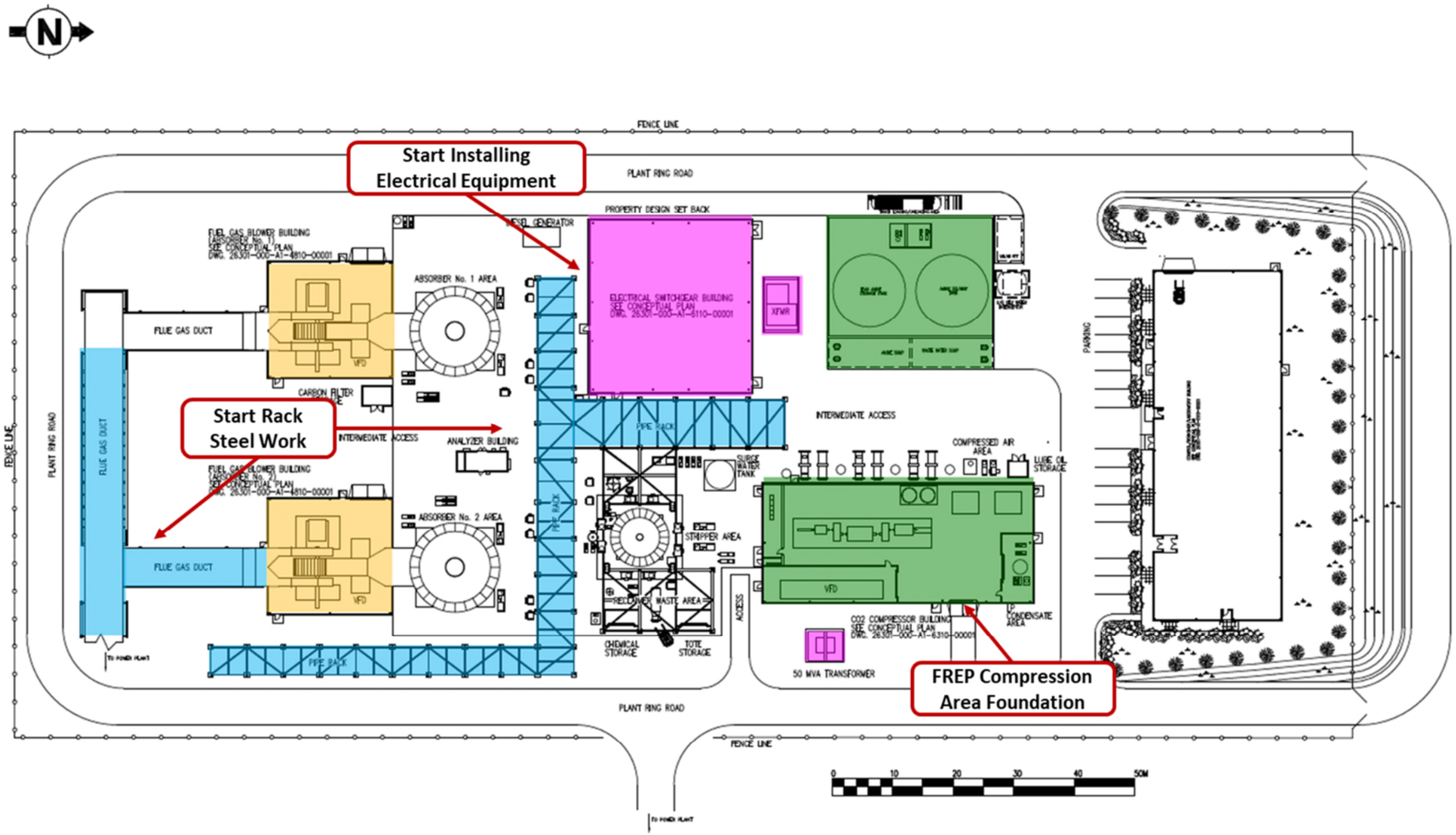

Month 18

Construction Activities:

- Complete installation of Flue Gas Blowers
- Commence foundation for Compression area
- Complete foundation for Amine Storage area
- Install Electrical Equipment
- Continue installation of Transformers
- Commence Pipe/Duct Rack Steel (allowing for crane access)

Color Legend

- Underground Utilities
- Mechanical Equipment
- Electrical Equipment
- FREP/Concrete
- Steel/Duct/Building Finishing
- Crane
- Security Barrier

Figure 15-14

PCC Plant Construction Plan (Month 18)

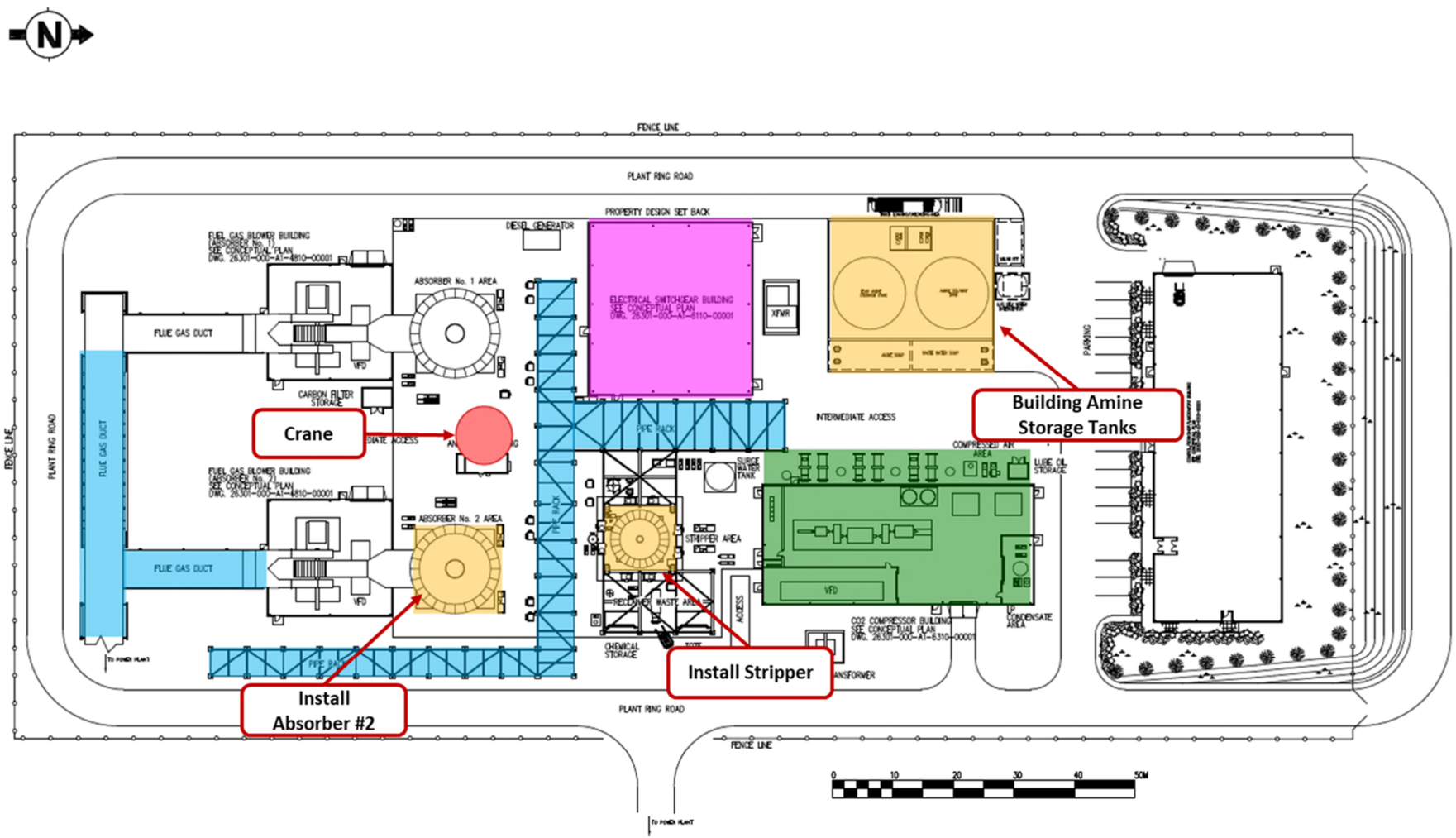

Month 19

Construction Activities:

- Set Stripper and CO2 Absorber #2
- Complete foundations for Compressor and Intercooler Area
- Commence building Amine Tank Storage area
- Install Switchgear
- Continue Pipe/Duct Work

Color Legend

- Underground Utilities
- Mechanical Equipment
- Electrical Equipment
- FREP/Concrete
- Steel/Duct/Building Finishing
- Crane
- Security Barrier

Figure 15-15

PCC Plant Construction Plan (Month 19)

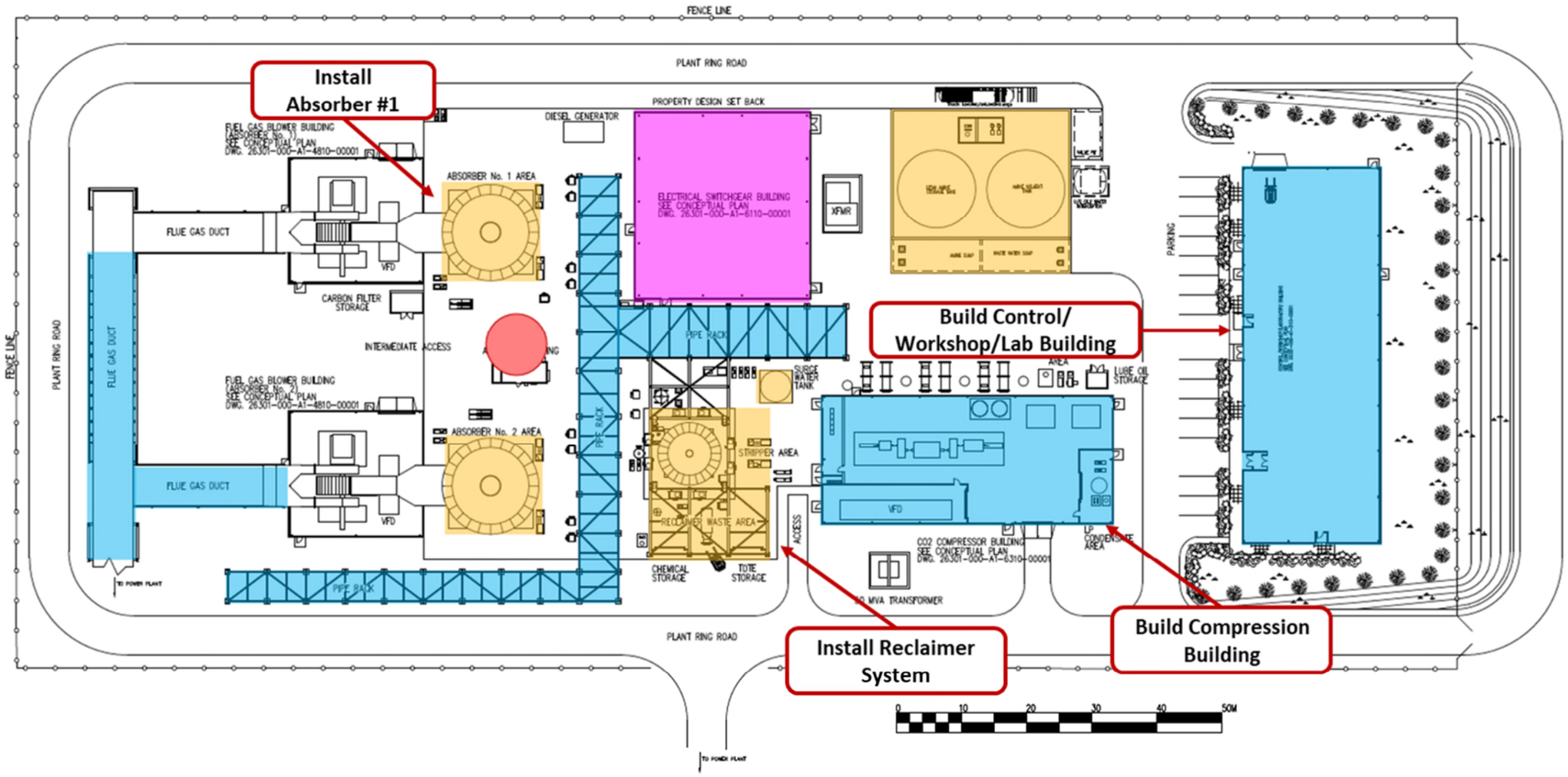

Month 20

Construction Activities:

- Set CO2 Absorber #1
- Continue installing Absorber #2 and Stripper/Reclaimer area
- Continue building Amine Storage area
- Commence Compression and Control/Workshop/Lab buildings
- Finish setting Electrical Equipment
- Begin installing Piping & Instrumentation
- Continue Pipe/Duct Work

Color Legend

- Underground Utilities
- Mechanical Equipment
- Electrical Equipment
- FREP/Concrete
- Steel/Duct/Building Finishing
- Crane
- Security Barrier

Figure 15-16

PCC Plant Construction Plan (Month 20)

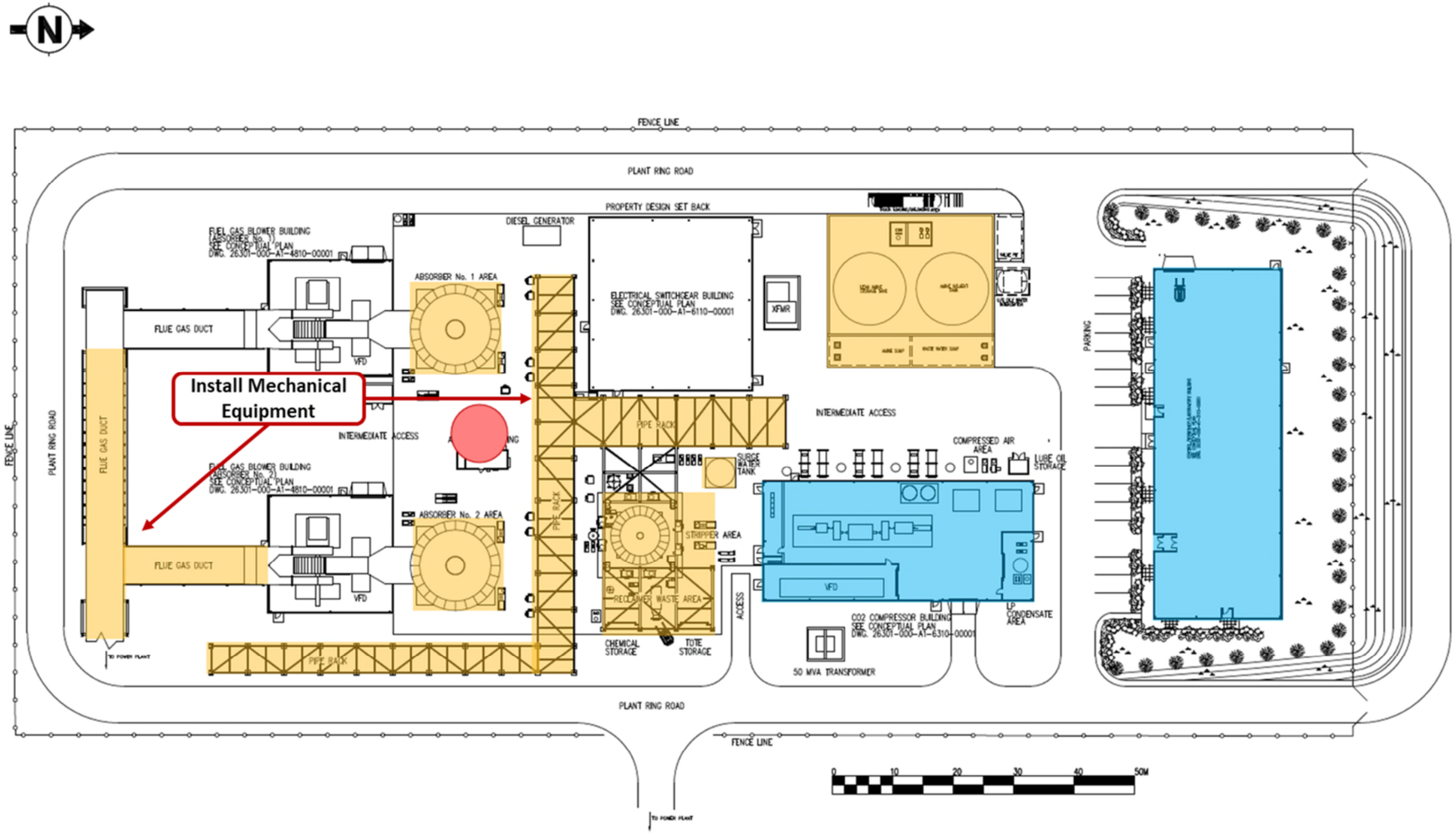

Month 21

Construction Activities:

- Continue installing Absorber and Stripper internals
- Continue building Amine Storage area
- Complete building Control/Workshop/Lab
- Continue installing Piping & Instrumentation
- Start installing mechanical equipment pipes/duct
- Compressor Building

Color Legend

- Underground Utilities
- Mechanical Equipment
- Electrical Equipment
- FREP/Concrete
- Steel/Duct/Building Finishing
- Crane
- Security Barrier

Figure 15-17

PCC Plant Construction Plan (Month 21)

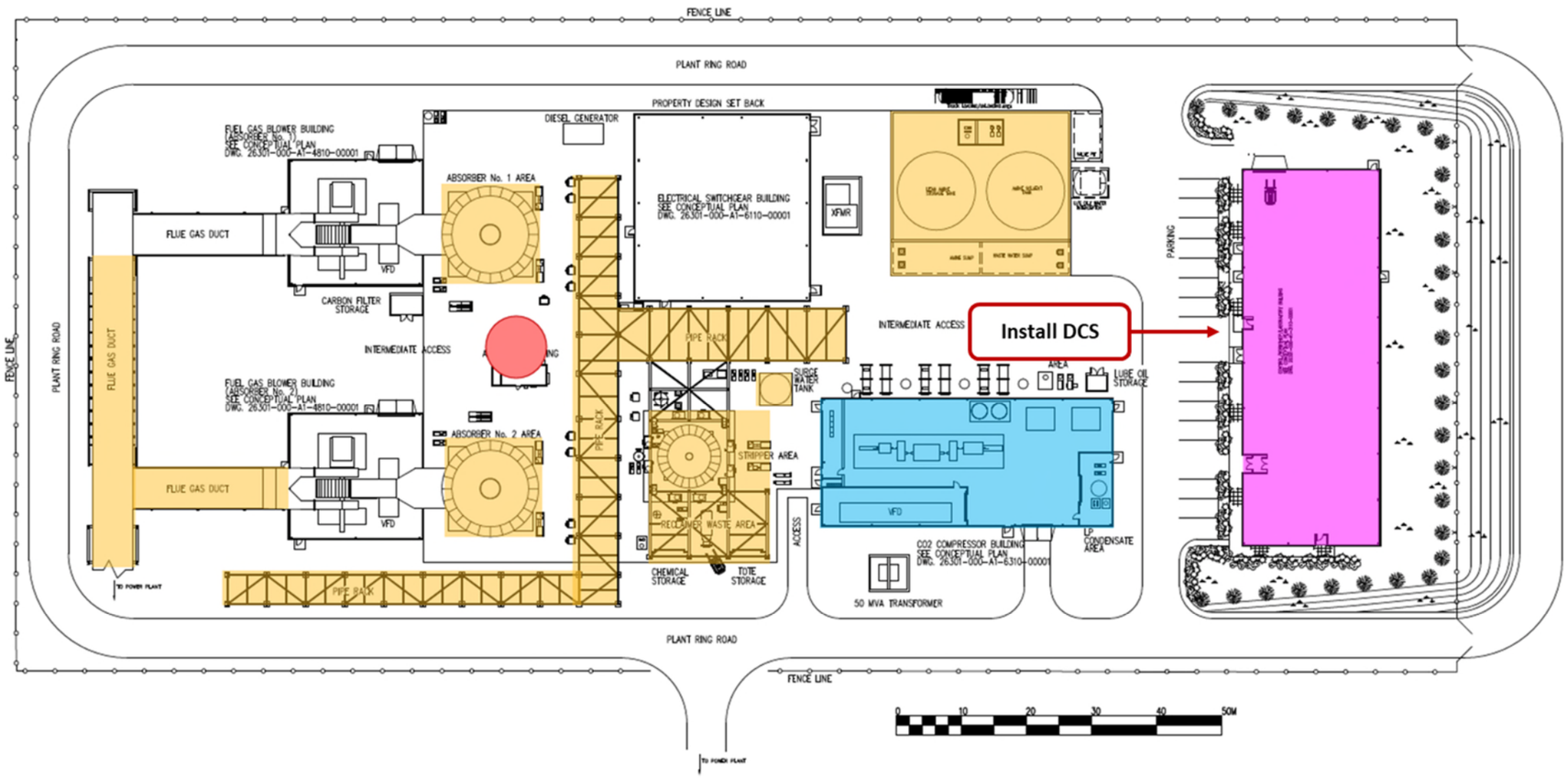

Month 22

Construction Activities:

- Continue installing Absorber and Stripper internals
- Continue building Amine Storage area
- Continue installing mechanical equipment
- Install DCS
- Compressor Building
- Install Piping & Instrumentation

Color Legend

- Underground Utilities
- Mechanical Equipment
- Electrical Equipment
- FREP/Concrete
- Steel/Duct/Building Finishing
- Crane
- Security Barrier

Figure 15-18

PCC Plant Construction Plan (Month 22)

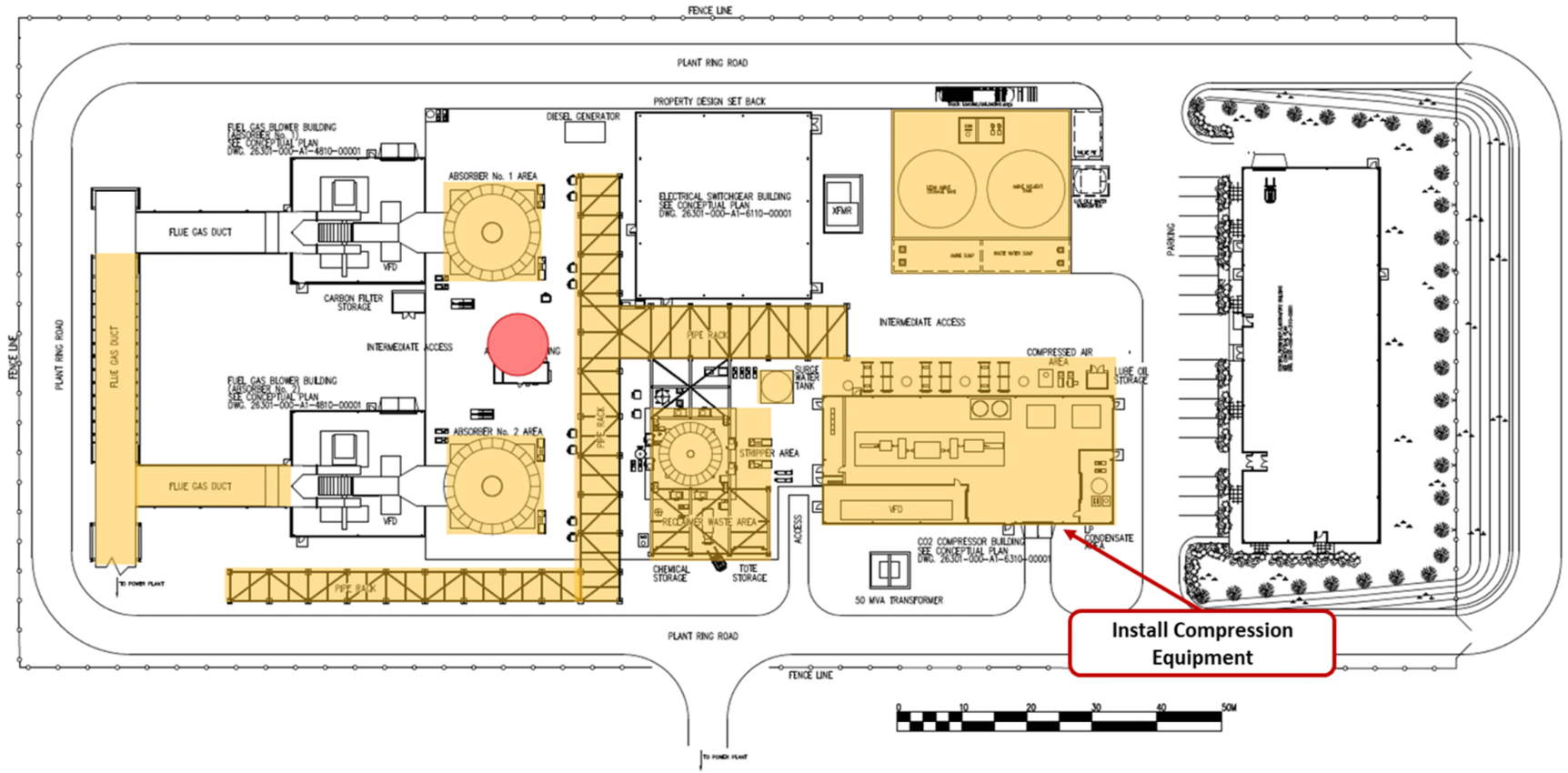

Month 23

Construction Activities:

- Continue installing Absorber and Stripper internals
- Install Compressor Equipment
- Continue building Amine Storage area
- Continue installing mechanical equipment
- Continue Piping & Instrumentation

Color Legend

- Underground Utilities
- Mechanical Equipment
- Electrical Equipment
- FREP/Concrete
- Steel/Duct/Building Finishing
- Crane
- Security Barrier

Figure 15-19

PCC Plant Construction Plan (Month 23)

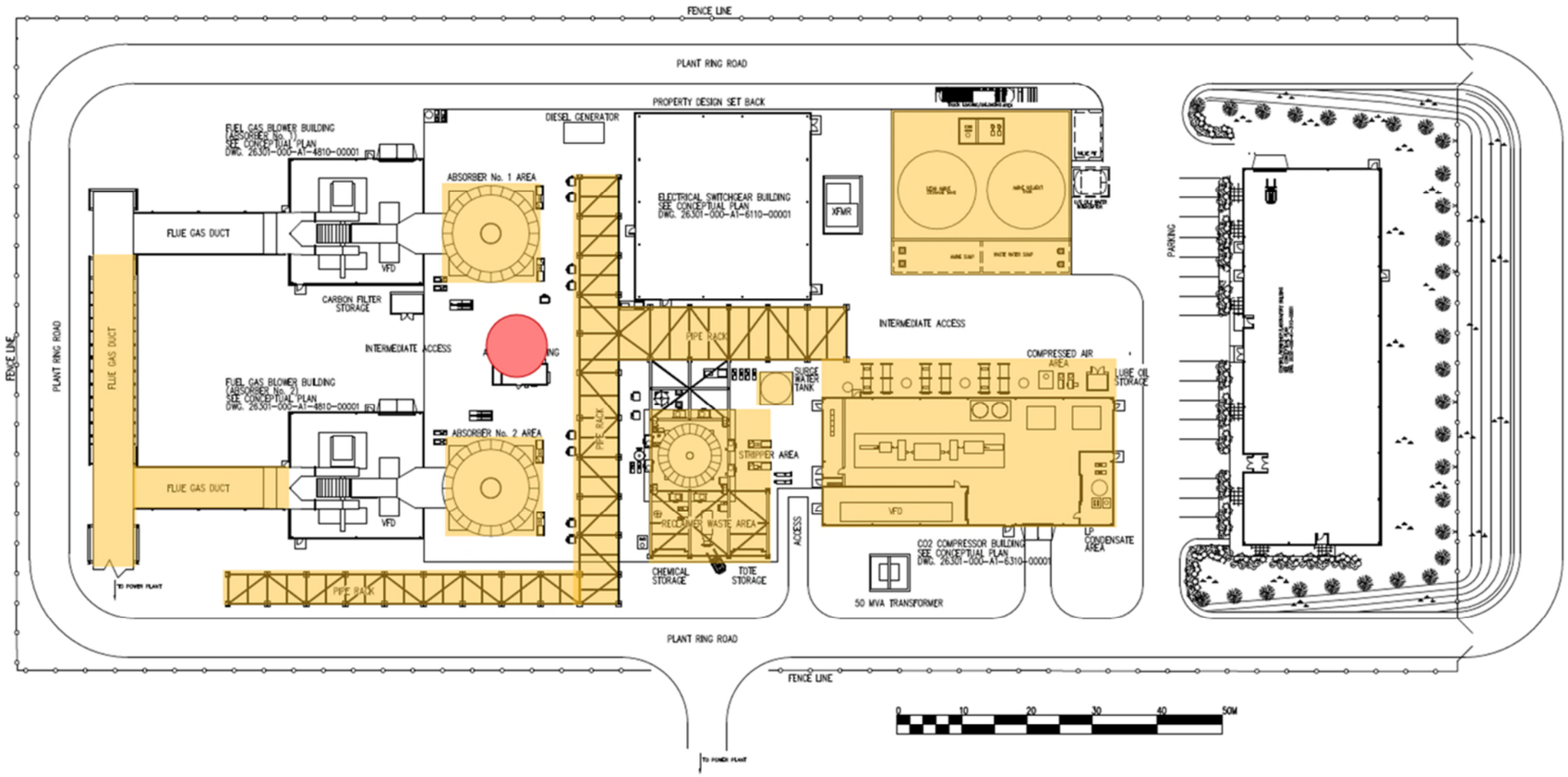

Month 24

Construction Activities:

- Continue installing Absorber and Stripper internals
- Continue installing Compressor Equipment
- Continue building Amine Storage area
- Continue installing leftover mechanical equipment
- Continue Piping & Instrumentation

Color Legend

- Underground Utilities
- Mechanical Equipment
- Electrical Equipment
- FREP/Concrete
- Steel/Duct/Building Finishing
- Crane
- Security Barrier

Figure 15-20

PCC Plant Construction Plan (Month 24)

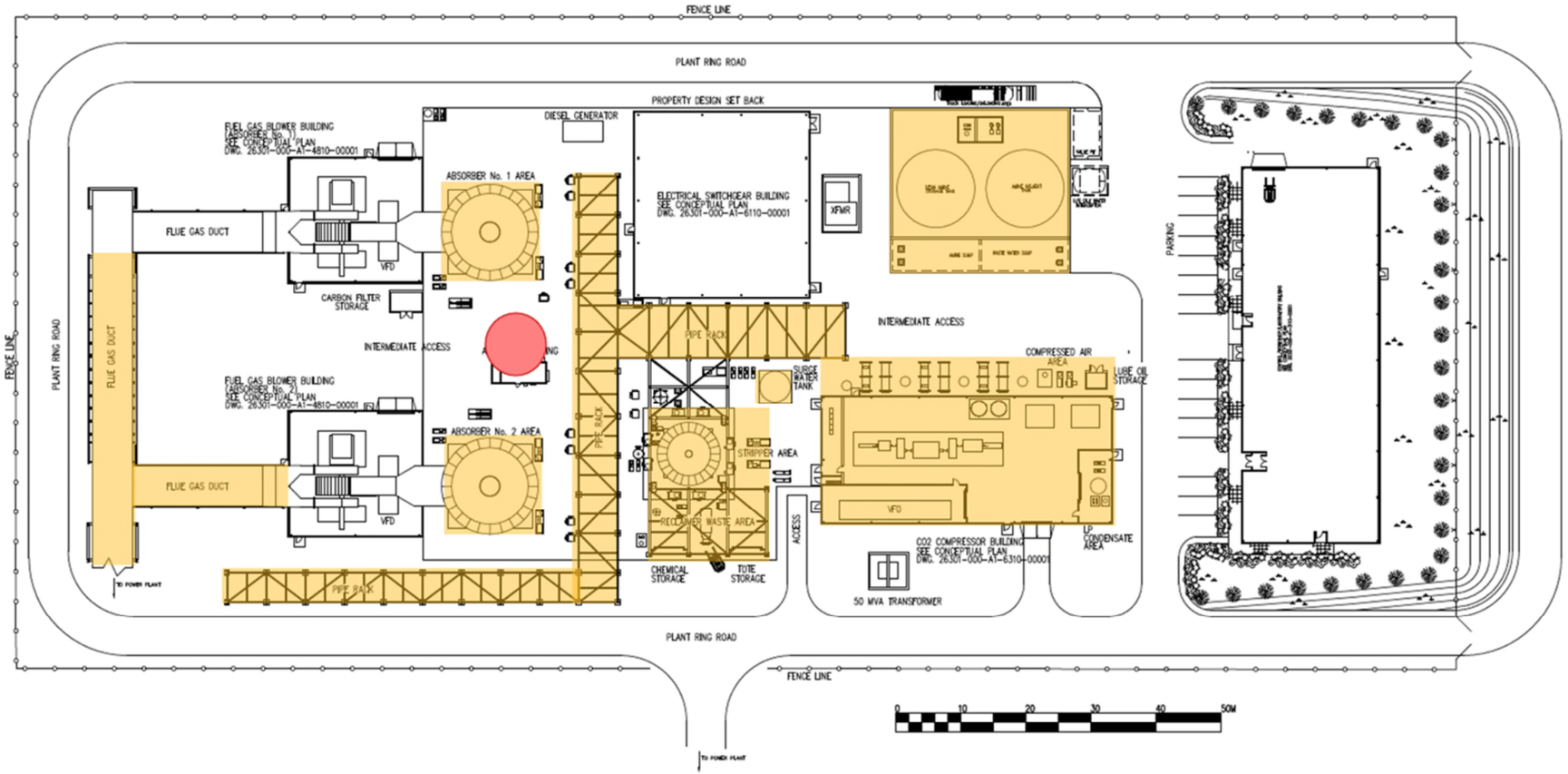

Month 25

Construction Activities:

- Complete installing Absorber and Stripper internals
- Complete installing Compressor Equipment
- Complete building Amine Storage area
- Continue installing leftover mechanical equipment
- Continue Piping & Instrumentation

Color Legend

- Underground Utilities
- Mechanical Equipment
- Electrical Equipment
- FREP/Concrete
- Steel/Duct/Building Finishing
- Crane
- Security Barrier

Figure 15-21

PCC Plant Construction Plan (Month 25)

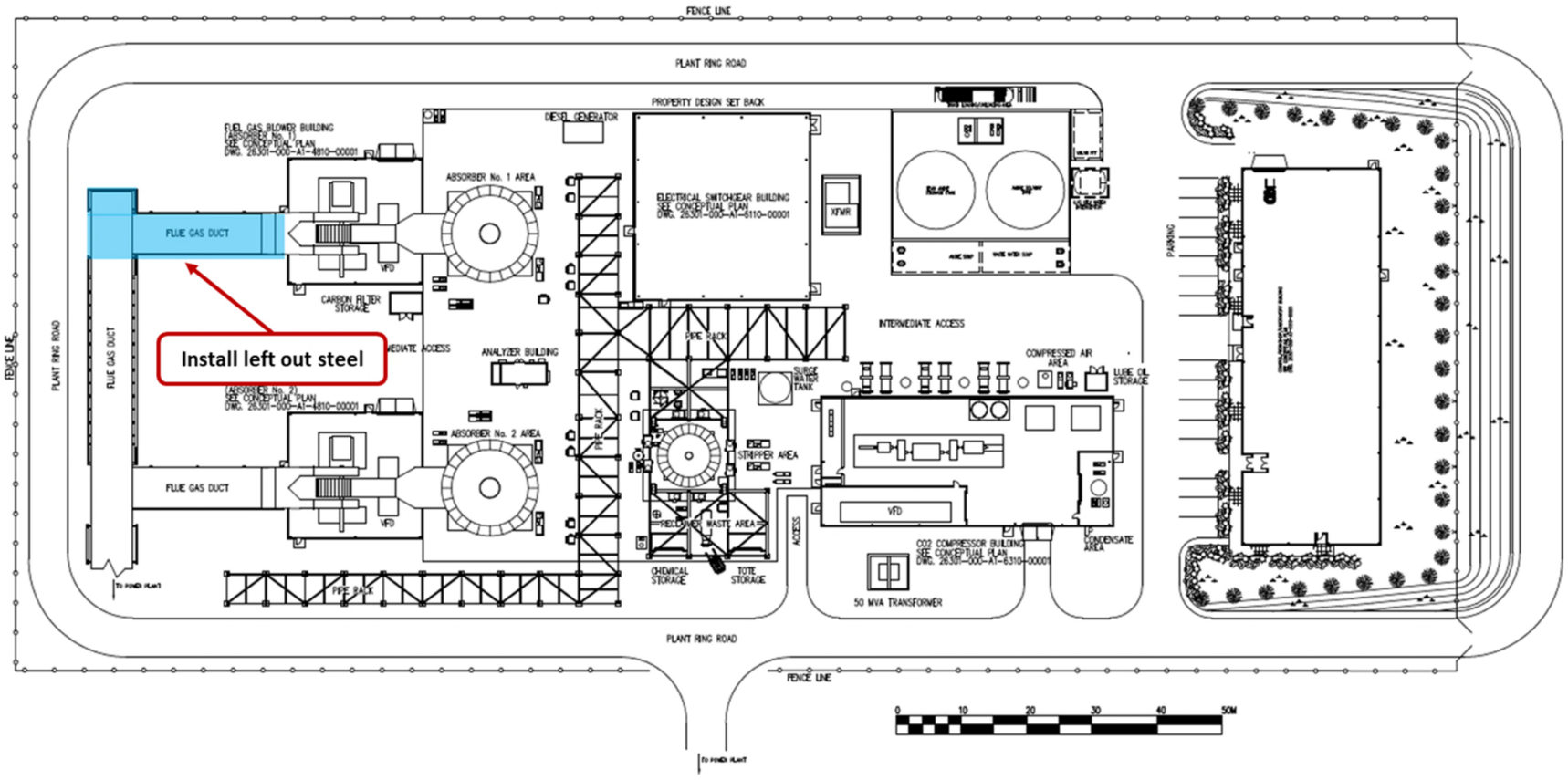

Month 26

Construction Activities:

- Install left out steel
- Finish remaining mechanical equipment and Piping & Instrumentation work
- Commissioning

Color Legend

- Underground Utilities
- Mechanical Equipment
- Electrical Equipment
- FREP/Concrete
- Steel/Duct/Building Finishing
- Crane
- Security Barrier

Figure 15-22

PCC Plant Construction Plan (Month 26)

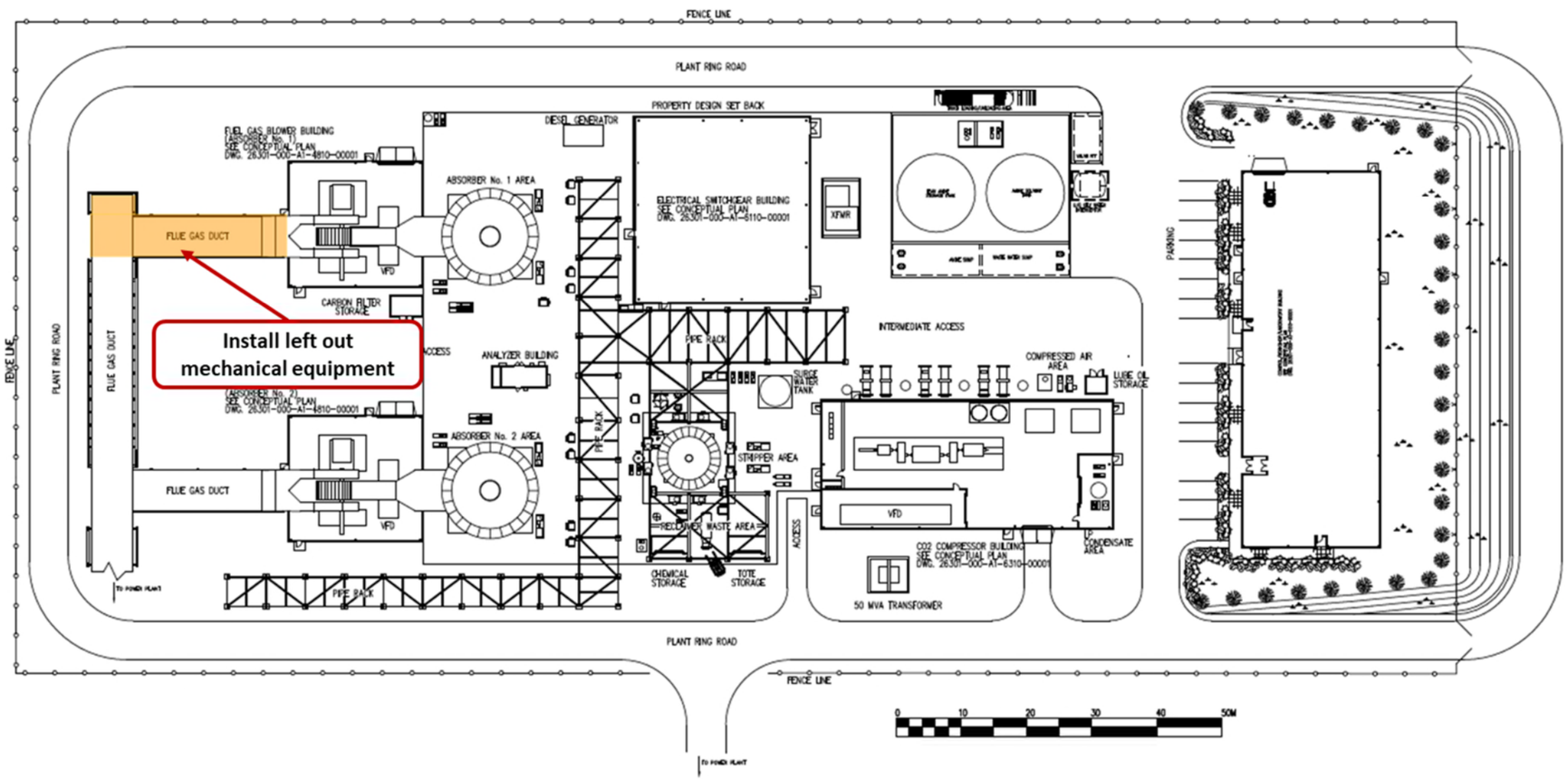

Month 27

Construction Activities:

- Install leave out duct
- Finish remaining Piping & Instrumentation work
- Commissioning

Color Legend

- Underground Utilities
- Mechanical Equipment
- Electrical Equipment
- FREP/Concrete
- Steel/Duct/Building Finishing
- Crane
- Security Barrier

Figure 15-23

PCC Plant Construction Plan (Month 27)

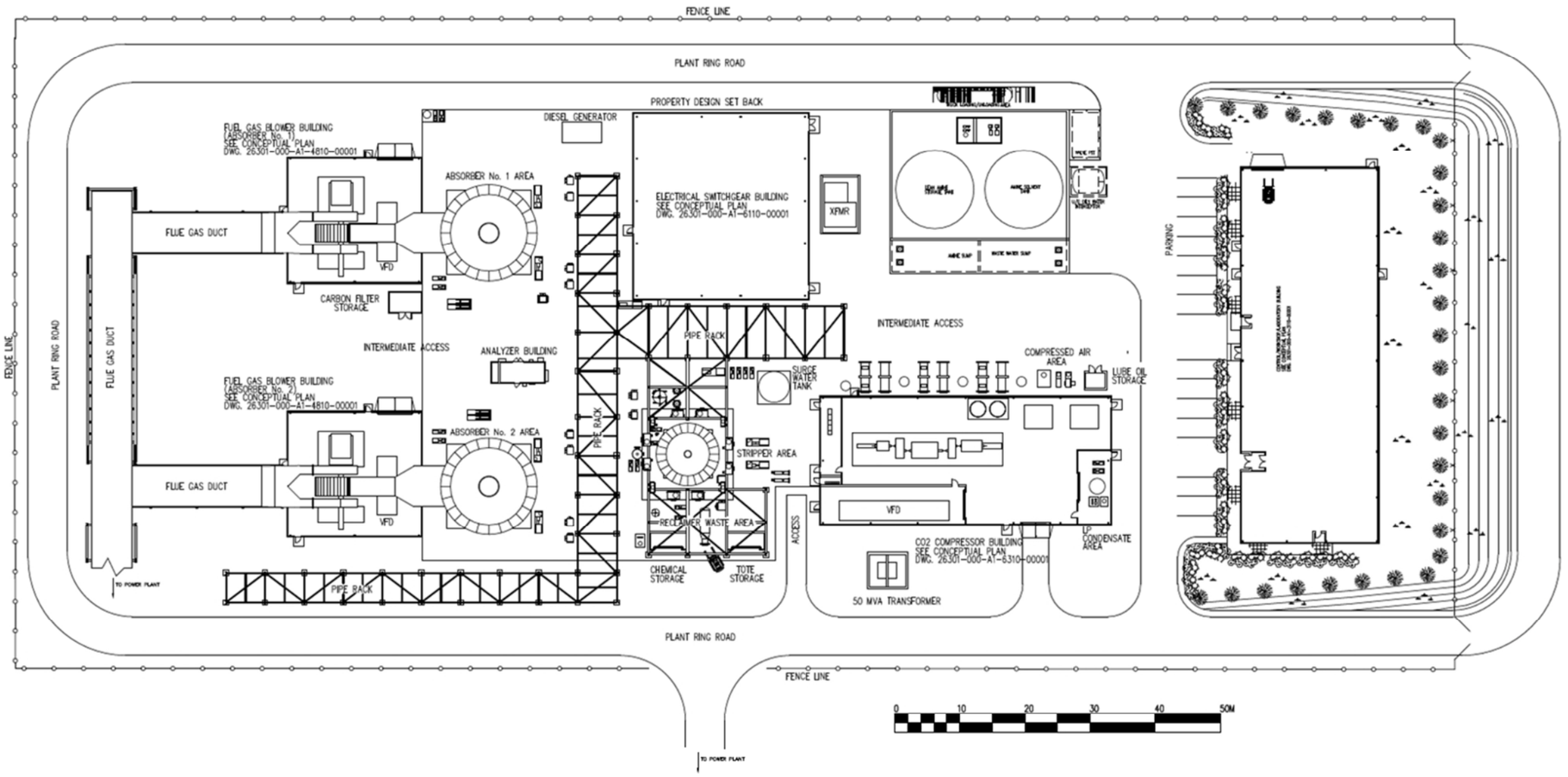

Month 28

Construction Activities:

- Finish remaining Piping & Instrumentation work
- Finish Commissioning

Color Legend

- Underground Utilities
- Mechanical Equipment
- Electrical Equipment
- FREP/Concrete
- Steel/Duct/Building Finishing
- Crane
- Security Barrier

Figure 15-24

PCC Plant Construction Plan (Month 28)

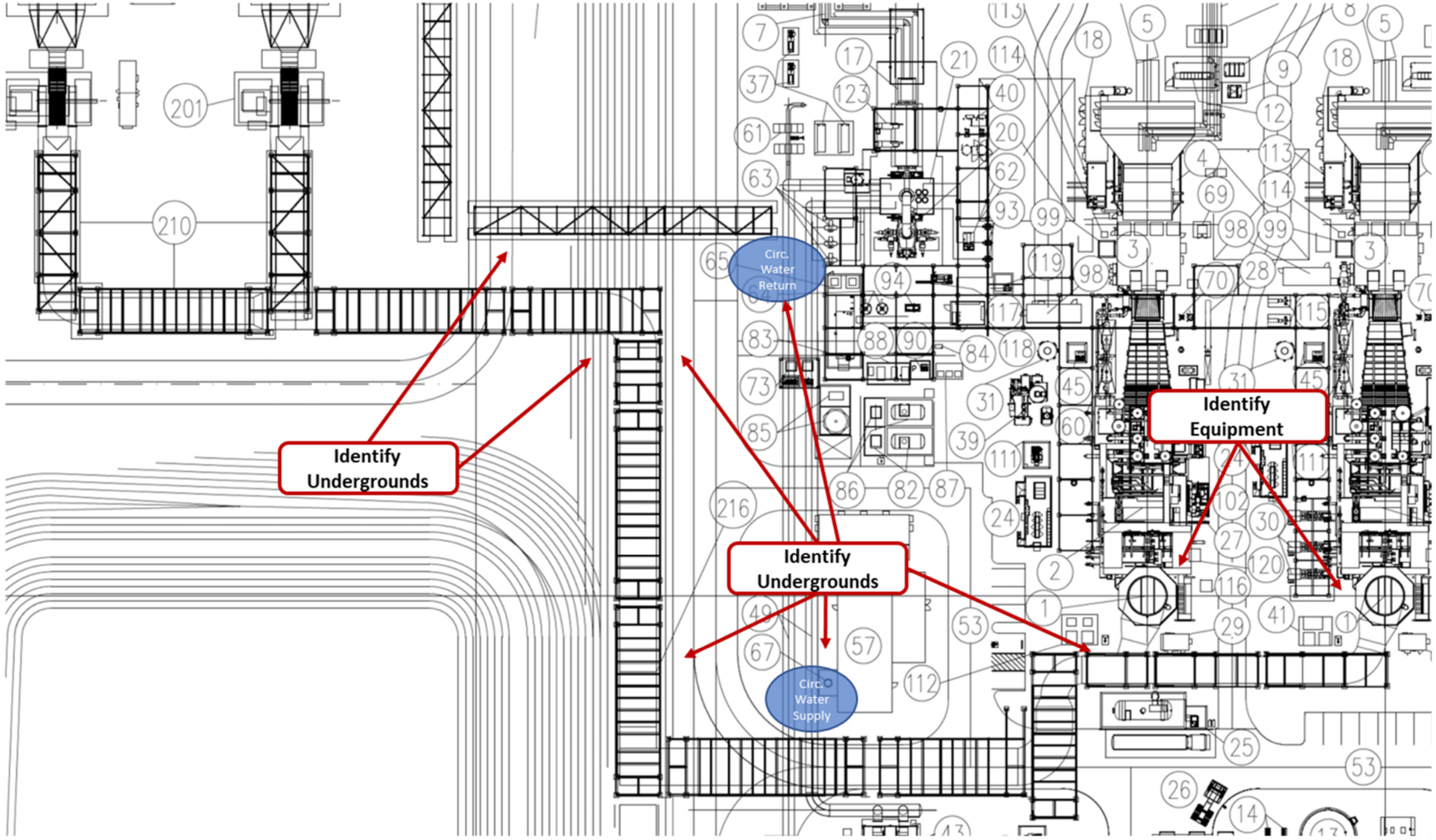

Month 10

Construction Activities:

- Identify all Equipment and Utilities that need relocation
- Procure necessary materials required for relocation
- Coordination with site owner

Color Legend

- Underground Utilities
- Mechanical Equipment
- Electrical Equipment
- FREP/Concrete
- Steel/Duct/Building Finishing
- Crane
- Security Barrier

Figure 15-25

Sherman Power Plant Construction Plan (Month 10)

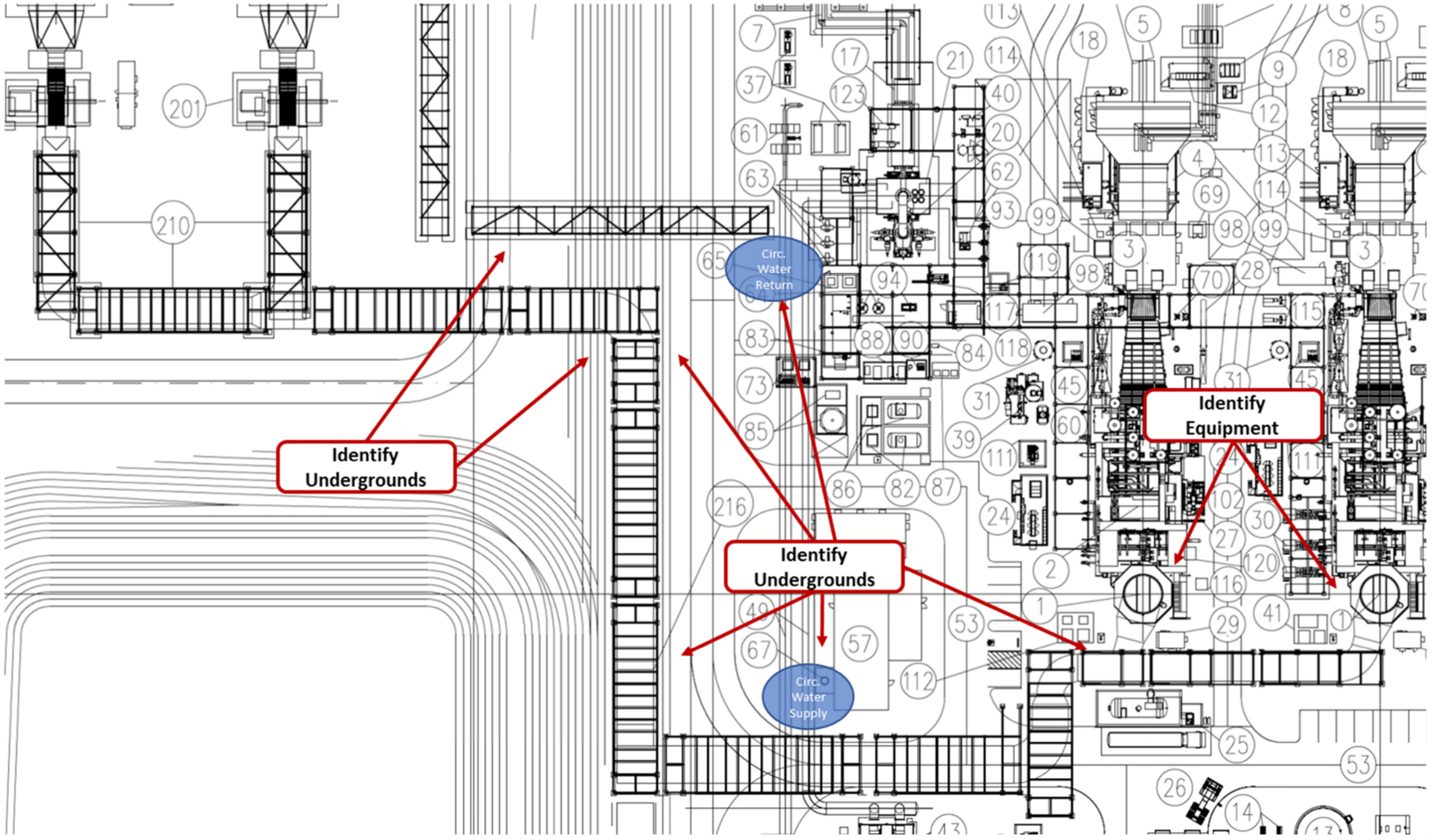

Month 11

Construction Activities:

- Identify all Equipment and Utilities that need relocation
- Procure necessary materials required for relocation
- Coordination with site owner

Color Legend

- Underground Utilities
- Mechanical Equipment
- Electrical Equipment
- FREP/Concrete
- Steel/Duct/Building Finishing
- Crane
- Security Barrier

Figure 15-26

Sherman Power Plant Construction Plan (Month 11)

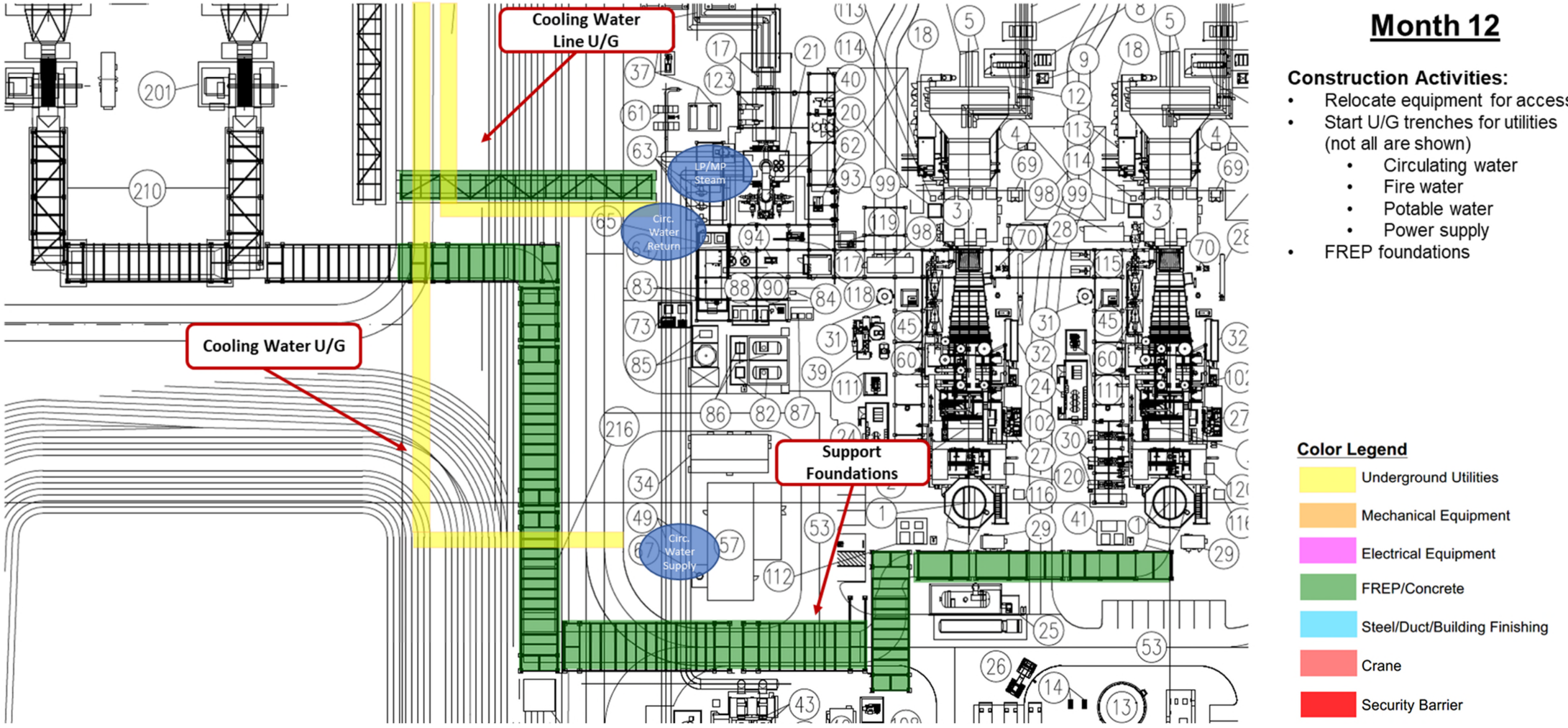

Month 12

Construction Activities:

- Relocate equipment for access
- Start U/G trenches for utilities (not all are shown)
  - Circulating water
  - Fire water
  - Potable water
  - Power supply
- FREP foundations

Color Legend

- Underground Utilities
- Mechanical Equipment
- Electrical Equipment
- FREP/Concrete
- Steel/Duct/Building Finishing
- Crane
- Security Barrier

Figure 15-27

Sherman Power Plant Construction Plan (Month 12)

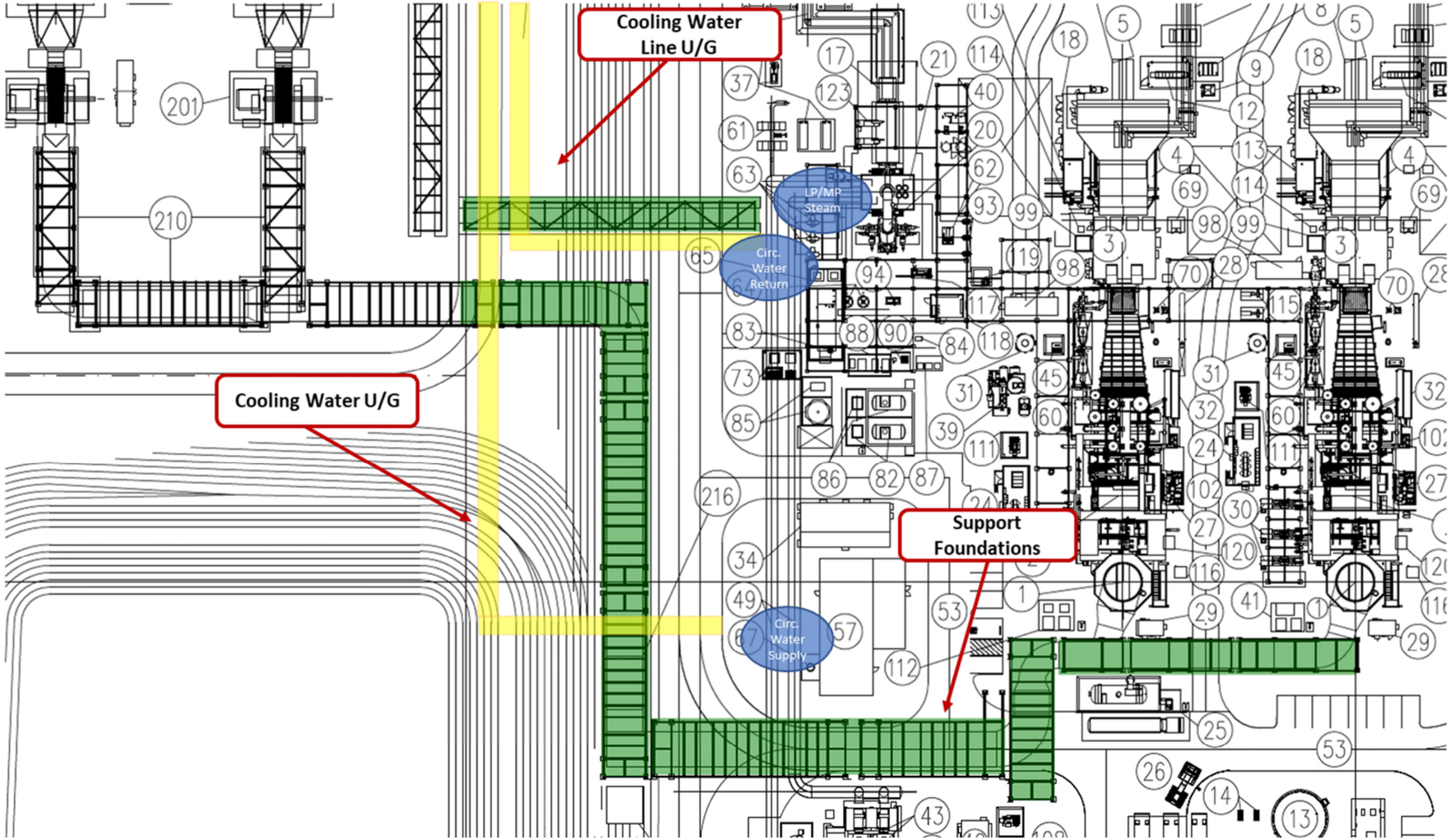

Month 13

Construction Activities:

- Relocate equipment for access
- Start U/G trenches for utilities (not all are shown)
  - Circulating water
  - Fire water
  - Potable water
  - Power supply
- FREP foundations

Color Legend

- Underground Utilities
- Mechanical Equipment
- Electrical Equipment
- FREP/Concrete
- Steel/Duct/Building Finishing
- Crane
- Security Barrier

Figure 15-28

Sherman Power Plant Construction Plan (Month 13)

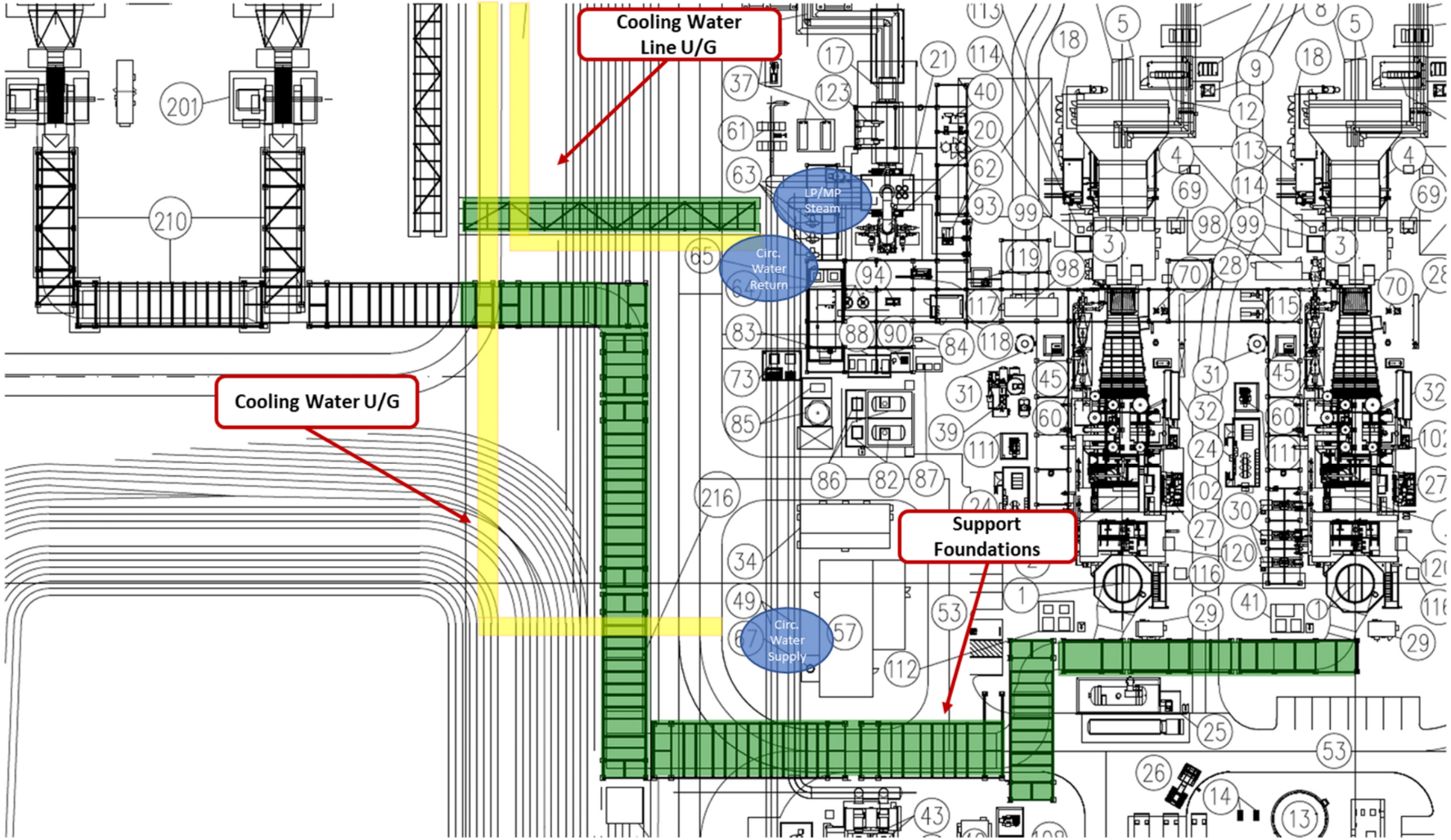

Month 14

Construction Activities:

- Relocate equipment for access
- Start U/G trenches for utilities (not all are shown)
  - Circulating water
  - Fire water
  - Potable water
  - Power supply
- FREP foundations

Color Legend

- Underground Utilities
- Mechanical Equipment
- Electrical Equipment
- FREP/Concrete
- Steel/Duct/Building Finishing
- Crane
- Security Barrier

Figure 15-29

Sherman Power Plant Construction Plan (Month 14)

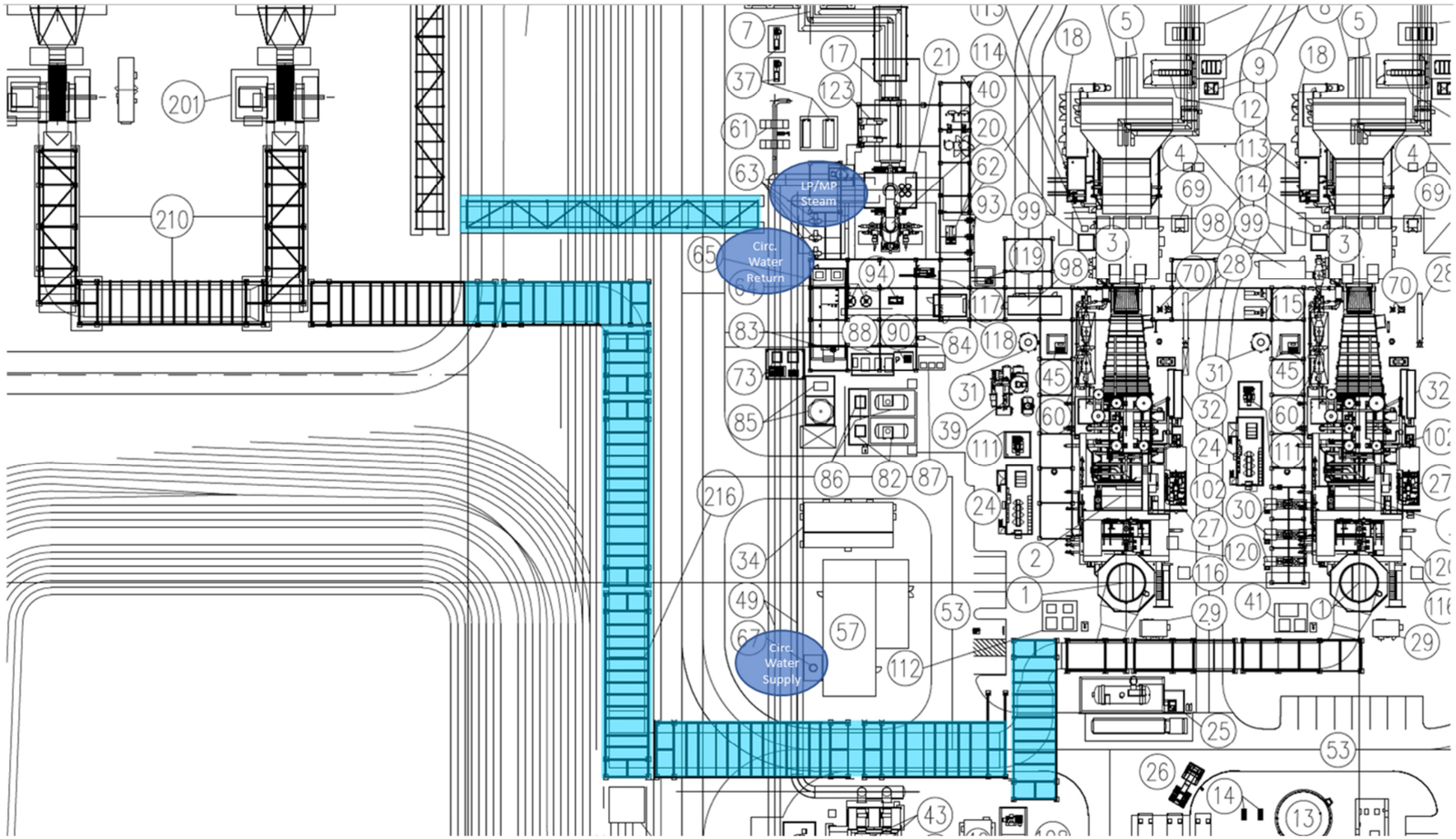

Month 15

Construction Activities:

- Steel and duct work

Color Legend

- Underground Utilities
- Mechanical Equipment
- Electrical Equipment
- FREP/Concrete
- Steel/Duct/Building Finishing
- Crane
- Security Barrier

Figure 15-30

Sherman Power Plant Construction Plan (Month 15)

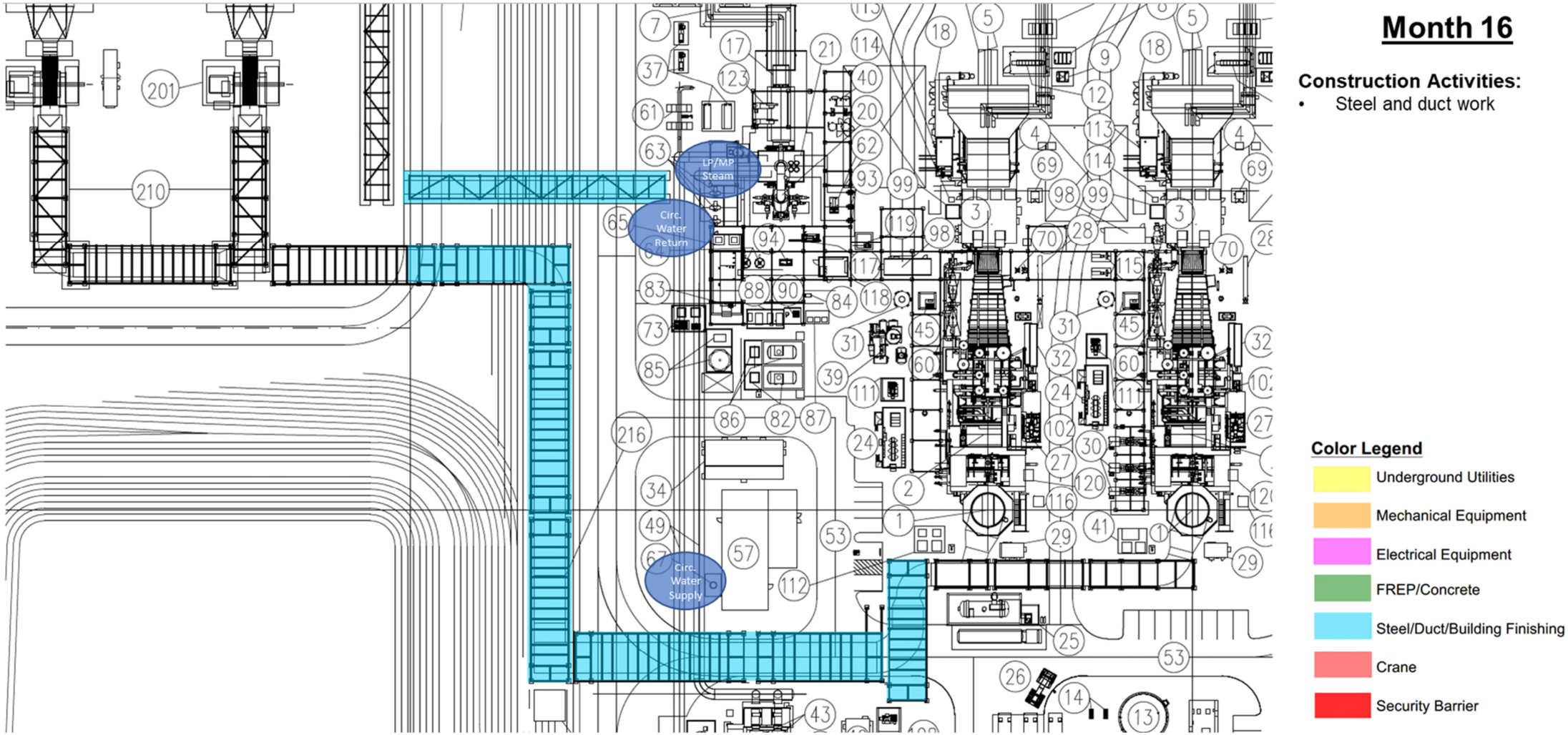

Figure 15-31

Sherman Power Plant Construction Plan (Month 16)

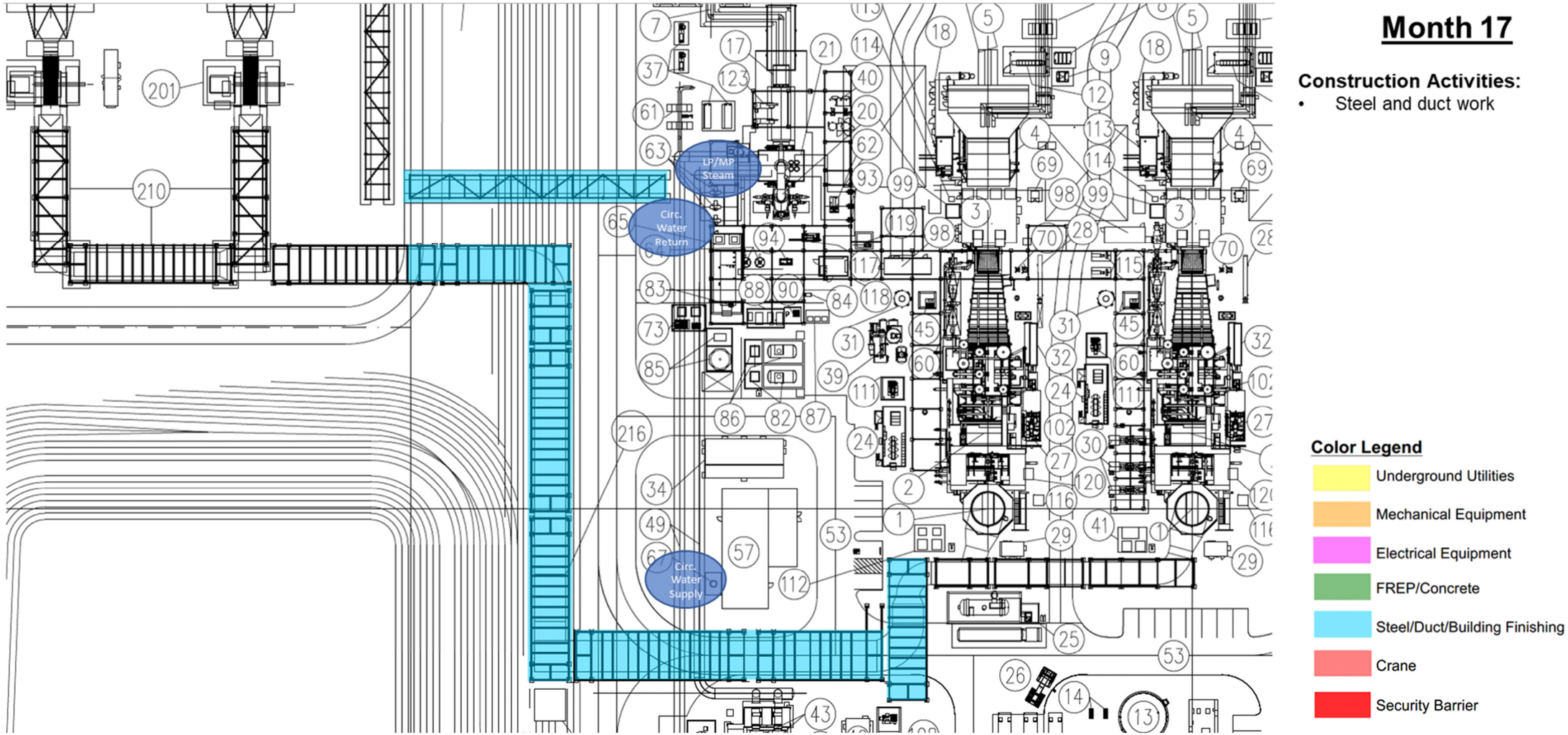

Figure 15-32

Sherman Power Plant Construction Plan (Month 17)

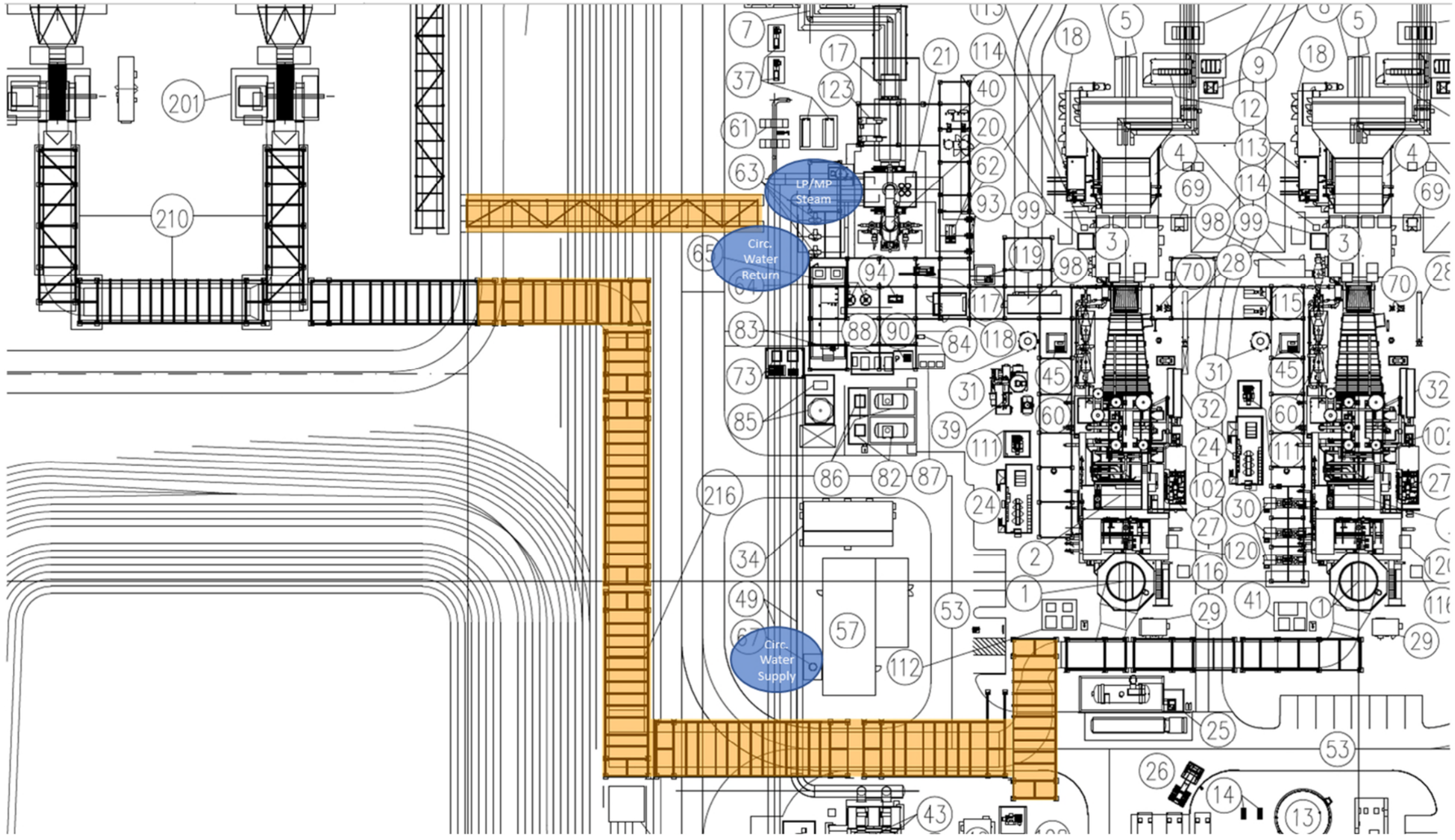

Month 18

Construction Activities:

- Mechanical work on duct and pipes

Color Legend

- Underground Utilities
- Mechanical Equipment
- Electrical Equipment
- FREP/Concrete
- Steel/Duct/Building Finishing
- Crane
- Security Barrier

Figure 15-33

Sherman Power Plant Construction Plan (Month 18)

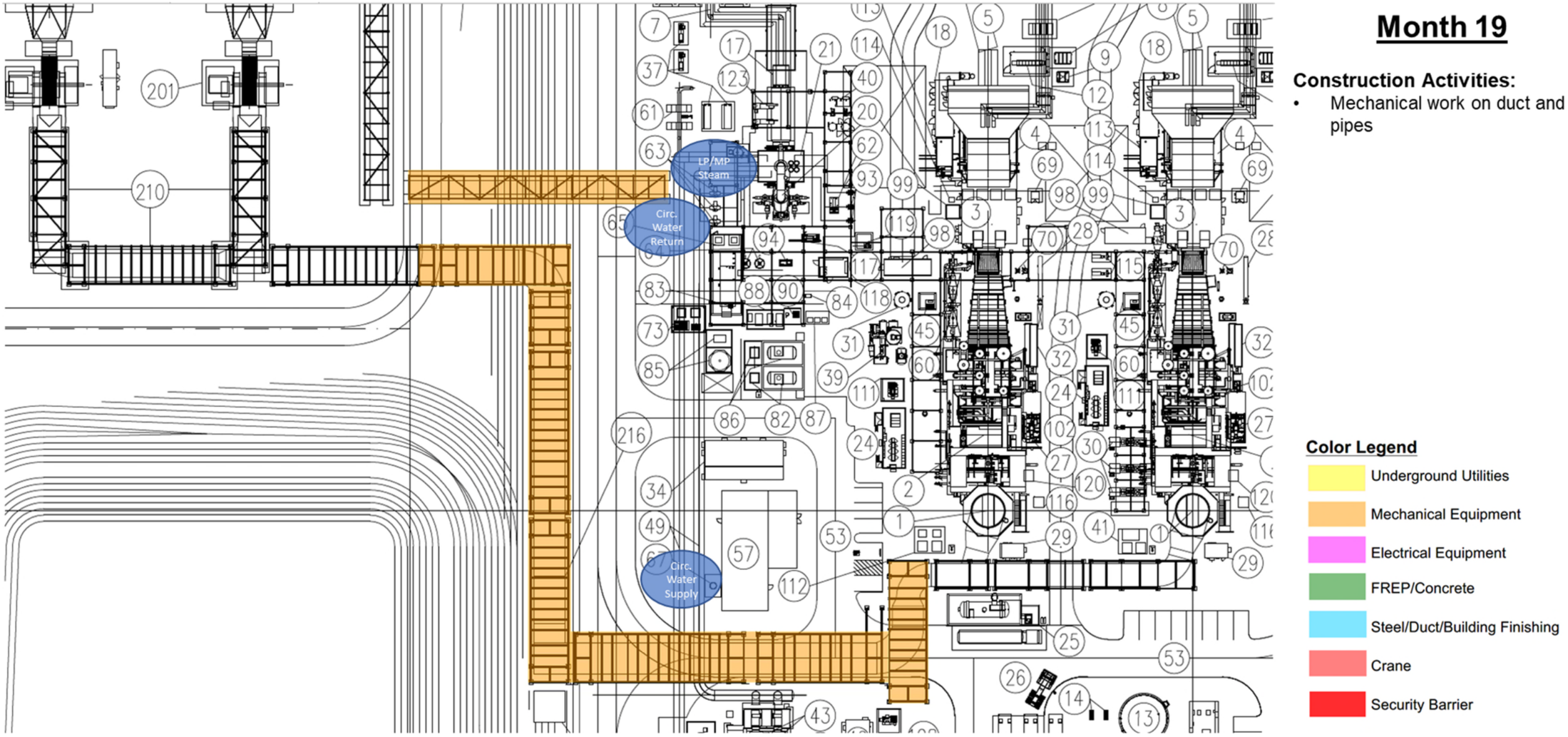

Figure 15-34

Sherman Power Plant Construction Plan (Month 19)

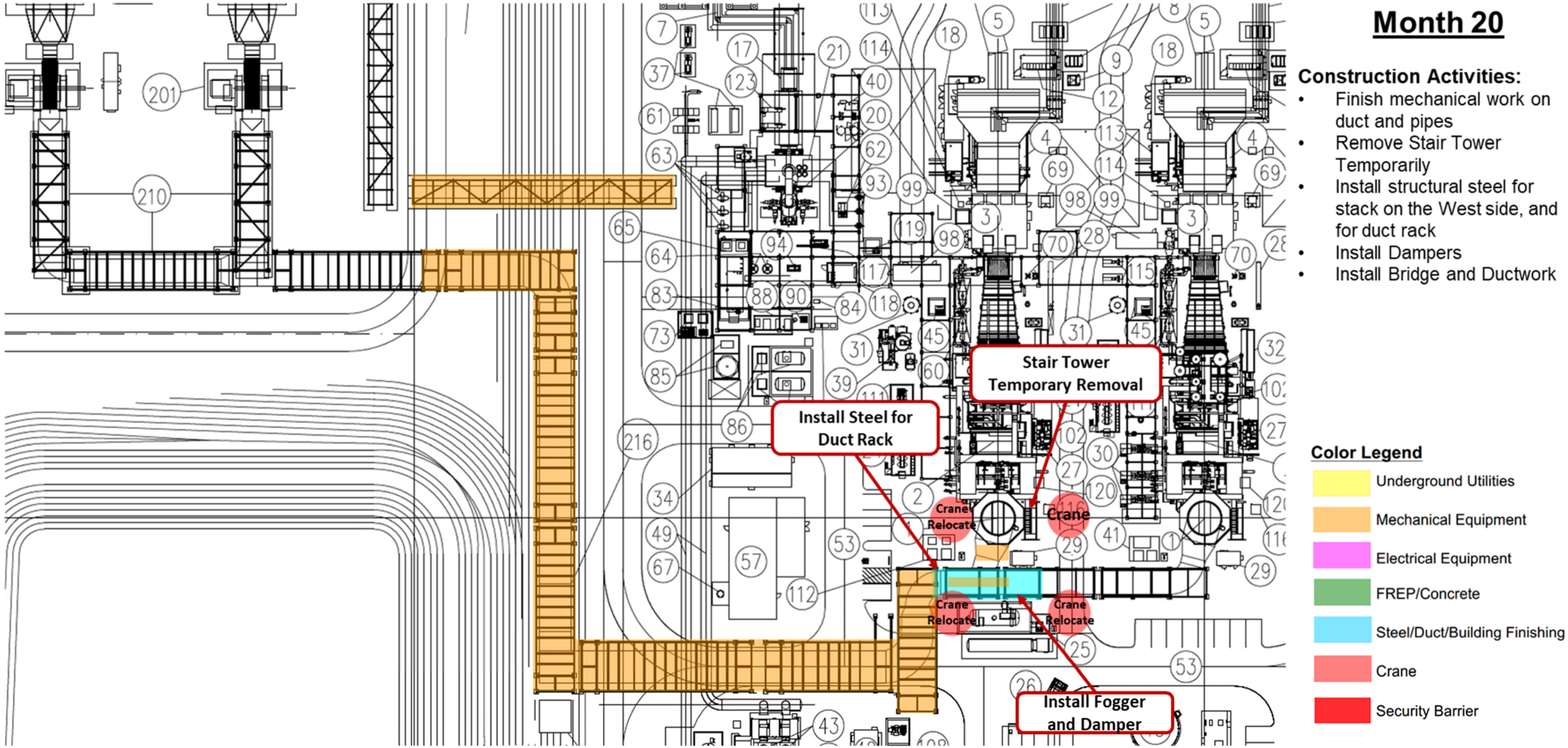

Figure 15-35

Sherman Power Plant Construction Plan (Month 20)

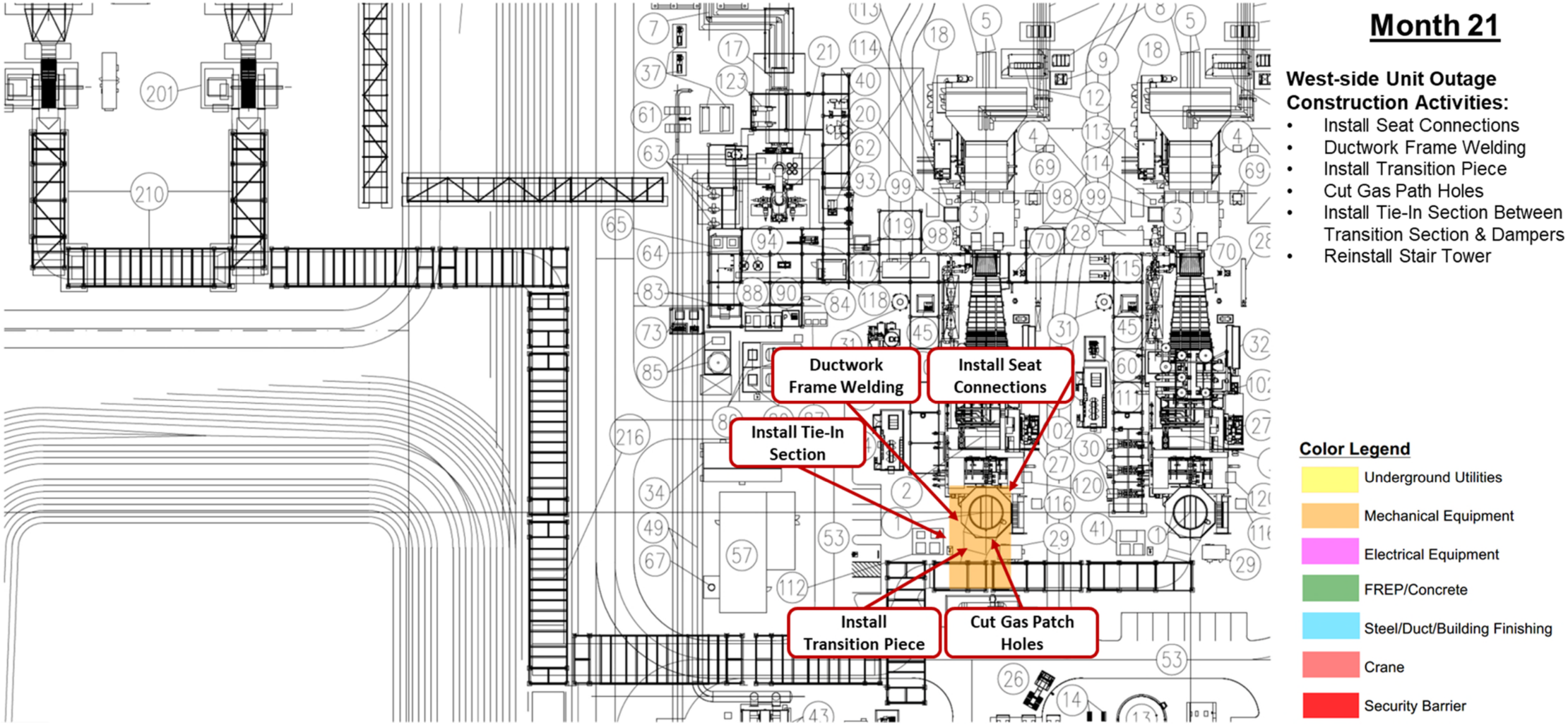

Month 21

West-side Unit Outage Construction Activities:

- Install Seat Connections
- Ductwork Frame Welding
- Install Transition Piece
- Cut Gas Path Holes
- Install Tie-In Section Between Transition Section & Dampers
- Reinstall Stair Tower

Color Legend

- Underground Utilities
- Mechanical Equipment
- Electrical Equipment
- FREP/Concrete
- Steel/Duct/Building Finishing
- Crane
- Security Barrier

Figure 15-36

Sherman Power Plant Construction Plan (Month 21)

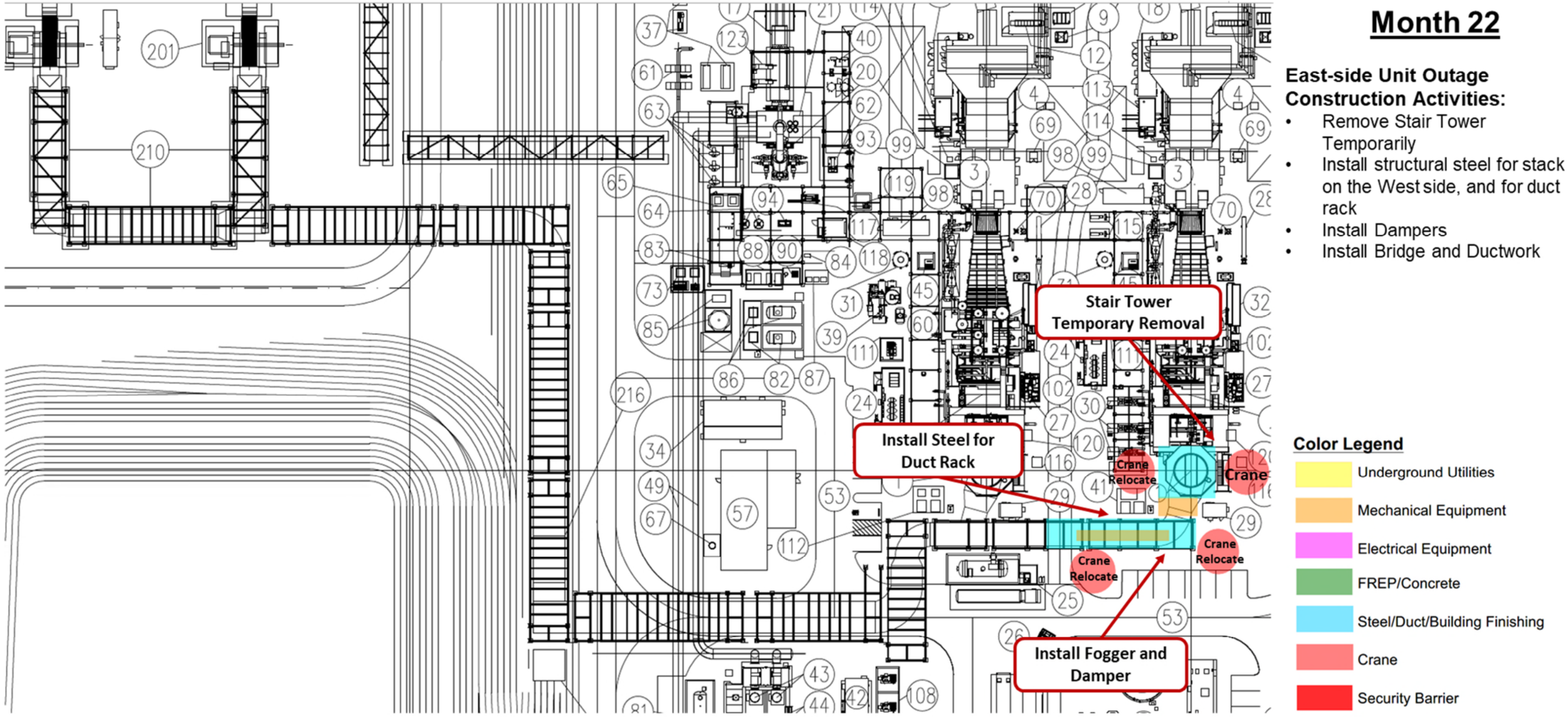

Figure 15-37

Sherman Power Plant Construction Plan (Month 22a)

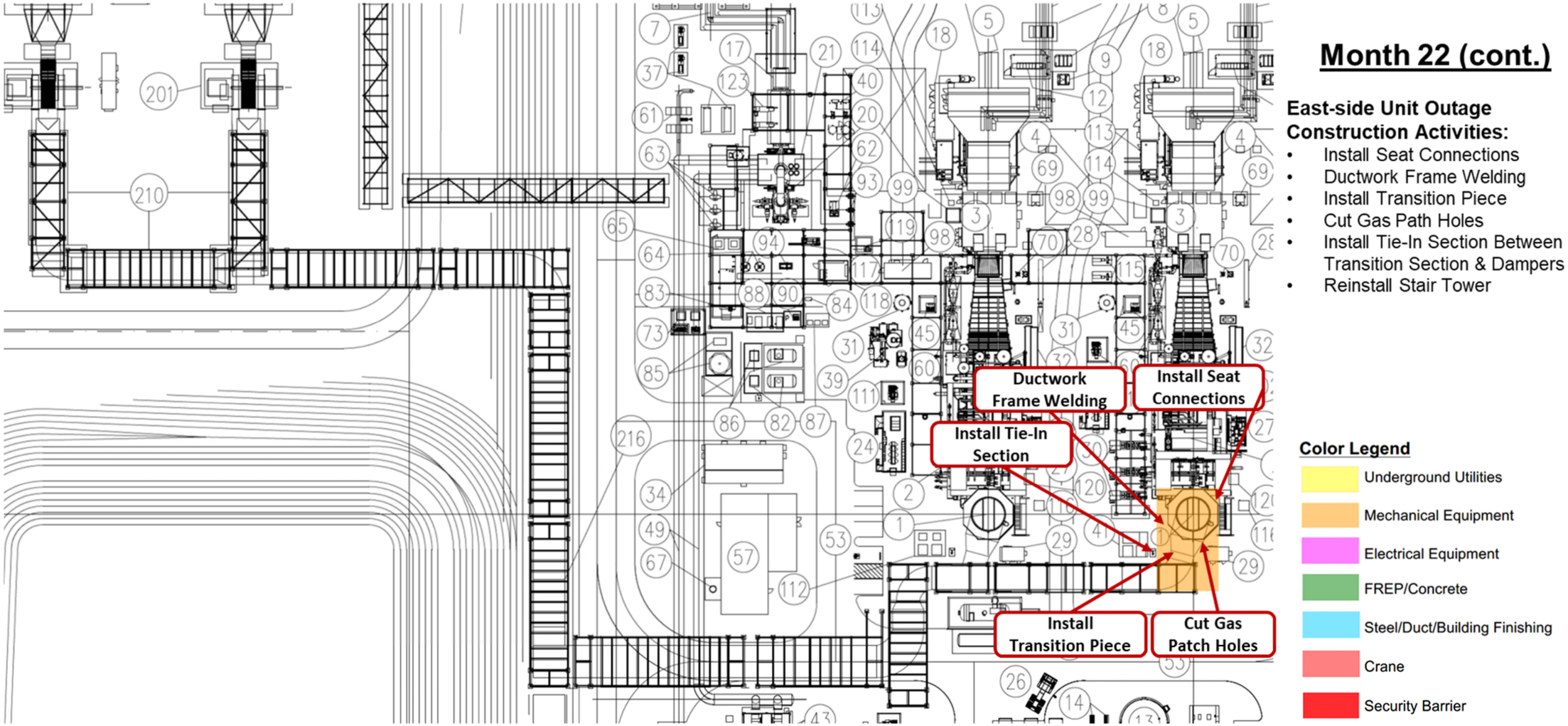

Month 22 (cont.)

East-side Unit Outage Construction Activities:

- Install Seat Connections
- Ductwork Frame Welding
- Install Transition Piece
- Cut Gas Path Holes
- Install Tie-In Section Between Transition Section & Dampers
- Reinstall Stair Tower

Figure 15-38

Sherman Power Plant Construction Plan (Month 22b)

Chapter 16: Cost and Economics

16.1 Cost Estimate

The capital and operating costs for the PCC plant at Sherman, which is sized to treat the flue gas from the power plant operating at 420 MW output, is contained in this chapter and in Appendix AC, Cost Estimate. The quantities associated with the costs presented in this chapter are also summarized in Appendix AC[5].

A capital cost summary is provided in Table 16-1.

Table 16-1

Capital Cost Estimate Summary

1	**Stack connection/modification including engineering, procurement, construction, and all ducting within the operating plant property**	**$15,851,337**
1.1	Flue gas plenum including support structure and foundation, reinforcement where necessary	$2,439,837
1.2	Demolition, relocation of equipment in stack area, modification of existing stack dampers and associated instrumentation	$3,781,483
1.3	Flue gas transfer duct including insulation in the stack area, measurement devices, and support structure and foundation works	$8,699,412
1.4	Cable and raceway for support of new power, instrumentation, lighting in stack area	$930,605
2	**Flue gas conditioning including engineering, procurement, construction from operating plant fence to absorber inlet flange**	**$52,418,588**
2.1	Flue gas foggers	$815,187
2.2	Flue gas fan including drives	$11,475,234
2.3	Process piping including valves and fittings	$1,470,883
2.4	Heat and sound insulation	$1,219,136
2.5	Ductwork	$34,575,785
2.6	Field equipment in flue gas conditioning area	$2,862,363
3	**CO_2 absorption including engineering, procurement, construction from flange in flue gas conditioning, and utility systems to flange toward solvent regeneration system**	**$79,589,477**
3.1	Absorbers	
3.1.1	Absorber vessels	$20,233,132
3.1.2	Internal packing including distribution, collectors, and associated equipment	$9,574,227
3.1.3	Piping, fittings	$20,678,653
3.1.4	Platforming	$2,179,443
3.2	All utilities, that is, heat exchanger, pumps including drives	$20,876,925
3.3	Insulation and cladding	$322,371
3.4	Field equipment in CO_2 absorption area	$5,724,726

[5] Refer to Appendix AD Responses to DOE-NETL Questions on Final Report for clarifications related to Cost Estimate, including taxes and insurance.

Table 16-1 (continued)

Capital Cost Estimate Summary

4	**Solvent regeneration including engineering, procurement, construction**	**$40,740,128**
4.1	Tanks and storage vessels	$1,078,635
4.2	Stripper	$13,765,874
4.3	Reboiler	$5,195,841
4.4	Overhead condenser	$1,552,815
4.5	Reclaimer	$2,977,354
4.6	All internal piping including valve and fittings	$13,199,788
4.7	Heat and sound insulation where applicable	$107,457
4.8	Field Equipment in Solvent Regeneration Area	$2,862,363
5	**CO_2 compressor and conditioning including engineering, procurement, construction from flange solvent regeneration system, and utility system to flange of the CO_2 pipeline to transport project**	**$43,349,473**
5.1	Multistage compression and conditioning package comprising all internal piping, valves, and fittings	$39,518,747
5.2	Heat and sound insulation	$382,433
5.3	Painting and coating	$488,629
5.4	Field equipment in compression and conditioning area	$2,959,664
6	**General utility system including engineering, procurement, construction**	**$51,319,711**
6.1	Cooling water system	$7,331,320
6.2	Process steam system	$12,959,151
6.3	Condensate system	$2,804,663
6.4	Sewage, waste water, potable water, sump pump systems	$7,756,702
6.5	Compressed air and instrument air system	$1,909,959
6.6	Storage tanks and chem feed	$3,703,609
6.7	Filters	$682,167
6.8	Firefighting system	$926,711
6.9	Other (including painting and coating and field instrumentation)	$13,245,429
7	**Civil structural work including engineering, procurement, construction**	**$46,915,097**
7.1	Site preparation comprising leveling works, roads, parking areas, pavements, utilities, fencing, and gates	$2,435,776
7.2	Foundations comprising formworks, concrete works, rebar, embeds	$19,914,944
7.3	Supporting steel for duct support, pipe racks, and all platforms and gratings	$11,525,265
7.4	Trenches for cables and piping	$3,525,187
7.5	Buildings (except control room building) comprising HVAC, sanitary installation, and cladding	$5,670,483
7.5.1	Control room, lab, storage building	$3,843,442

Table 16-1 (continued)

Capital Cost Estimate Summary

8	**DCS, communication, main power supply, all distribution system and auxiliary system including engineering, procurement, construction**	**$55,674,815**
8.1	Power transformers	$1,785,542
8.2	Medium-voltage switchgear including power factor compensation	$2,531,865
8.3	Low-voltage switchgears and MCCs	$1,133,026
8.4	DC equipment	$1,374,756
8.5	Safe AC equipment	$0
8.6	Emergency diesel generator set including prime mover and all necessary auxiliary equipment such as AVR and generator protection	$563,873
8.7	Cabling including cable connecting, cable terminations, cable joints	$19,042,808
8.8	Earthing and lightning protection	$1,440,883
8.9	Lighting and small power installations	$5,497,165
8.10	All raceway including conduit, cable tray in amine area	$17,021,049
8.11	All raceway including conduit, cable tray in CO_2 area	$1,092,687
8.12	Switchyard tie-in	$404,156
8.13	DCS	$1,436,493
8.14	Plant communication systems	$381,531
8.15	Fire and gas monitoring and alarm system	$1,968,979
9	**General (indirect) costs**	**$59,132,274**
9.1	Project engineering (including project management, documentation, other)	$10,351,364
9.2	Construction preliminaries	$34,668,036
9.3	Mechanical completion; commissioning and testing	$13,112,874
9.4	Training	$1,000,000
10-A	**Contractor's costs**	**$444,990,899**
10-B	**Owner's cost**	**5,009,101**
10.1	Siemens' cost for STG modifications, including crossover pipe	1,800,000
10.2	Miscellaneous owner's cost for tie-in systems (allowance)	3,209,101
	Direct cost	**450,000,000**
10-C	**Interest during construction, 1-1/2 years at 4%**	**27,000,000**
	Total cost	**477,000,000**

Figure 16-1 depicts the capital cost of the five major portions of the PCC plant. The flue gas blowers are included in the flue gas conveyance segment of the chart. As areas for capital cost savings are contemplated in subsequent stages of the work, it is probable that absorption and flue gas conveyance are the initial targets because these are the two largest segments of the capital cost.

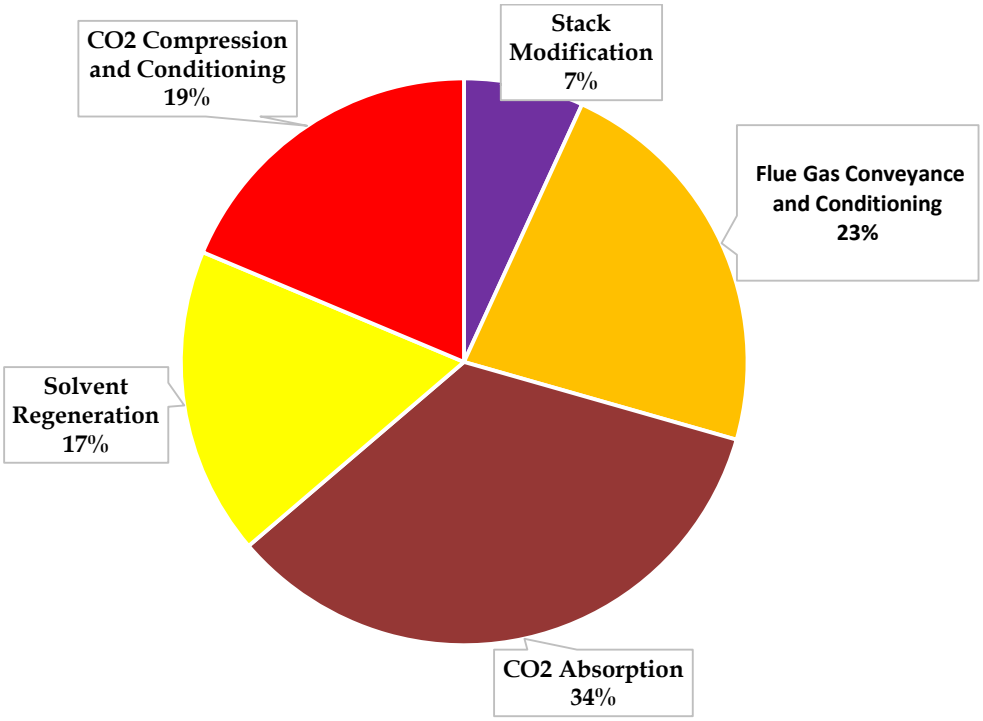

Figure 16-1

Cost for PCC Areas as Percent of Contractor's Cost

Note: Cost of utilities and indirects is included within each PCC area and is assumed to be proportional to the direct cost of the facilities shown in the chart.

Figure 16-2 depicts the capital cost of the PCC plant broken down into the commodities and classes of costs used in the EPC estimating process. Details of each segment in the chart are provided in Appendix AC.

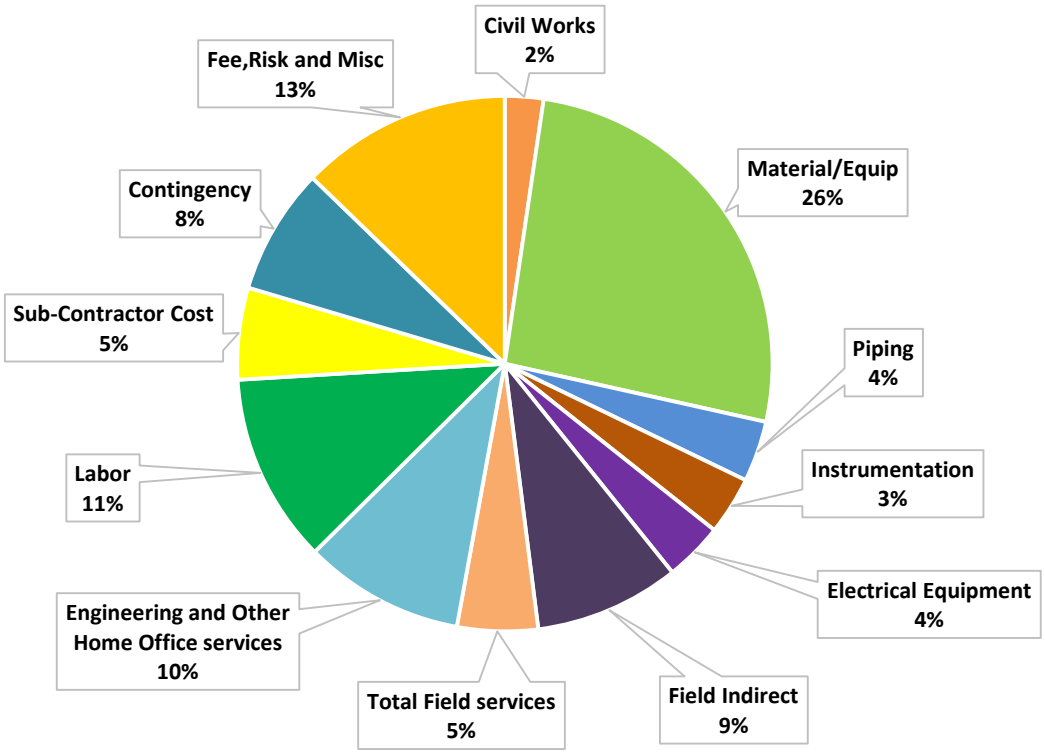

Figure 16-2

Costs as Percentage of Contractor's Cost

Field indirects may be reduced in subsequent stages of the project through better crane usage schedules and coordination with vendors using the fabrication yard. Fee, risk, and miscellaneous may be reduced as responsibilities and liabilities are apportioned to various participants.

16.2 Contingency Analysis

Contingency has been added to account for expected expenditures that are not possible to delineate at the time of the estimate. An @ Risk model was prepared based on input from Project Management, Estimating, Construction, Engineering, and Procurement regarding their confidence level in each category that contributed to the total cost. The resulting Range of Outcome curve is shown in Figure 16-3. The current estimate basis, shown in Table 16-2, is the P80 (confidence level that cost will not exceed 80% of the time) Estimate Uncertainty plus two months of house load for a typical duration between target and guaranteed complete. Also shown are the key uncertainties identified by the team.

Table 16-2

Contingency Chart

Evaluated Contingency	Cost ($1000)	Contingency @ P50	%	Contingency @ P80	%
Labor	63,760	2,700	4.2%	4,570	7.2%
Material and subcontracts	199,080	8,980	4.5%	15,190	7.6%
Services	87,750	4,430	5.0%	7,490	8.5%
Other costs	12,270	0	0.0%	0	0.0%
Total cost contingency	362,860	16,100	4.4%	27,250	7.5%
Schedule contingency		6,390	1.8%	6,390	1.8%
Total contingency	362,860	22,490	6.2%	33,640	9.3%

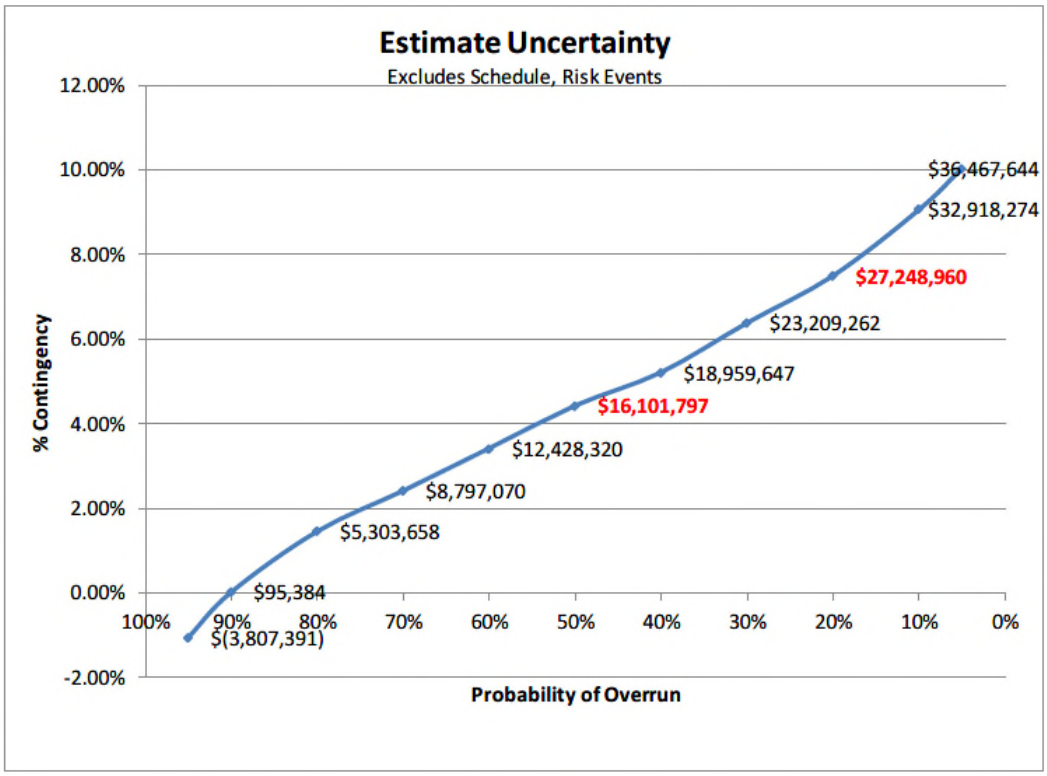

Figure 16-3

Estimate Uncertainty Probability Chart

16.3 Qualifications and Assumptions

- Estimate is based on worldwide sourcing, with 1) no country and or melt of origin restrictions, 2) no Buy American Act obligations, and/or 3) any other potential project financing obligations such as export credit agencies (ECA), overseas private investment corporations (OPIC), international financial institutions (IFI), and international commercial and investment banks.
- Includes per diem for 60% of craft.

- Assuming NTP is today for the purposes of escalation and only 2% forward escalation has been included.
- Pilot plant costs are excluded from this estimate.
- Costs are specific to the Sherman, Texas site and associated T&L, soils, craft, climate, and so on.
- Contractor's cost excludes costs for Siemens tie-in to STG (separate work directly for power plant owner).
- Estimate includes builder's risk insurance and general liability. All other insurances are excluded (marine cargo, terrorism, and so on).
- Taxes are excluded.

Securities included 10% escalating letter of credit and 5% warranty bond.

The annualization of the capital cost prior to final investment decision by the PCC plant owner will require detailed modeling with final data inputs, debt sources, and costs as well as owner's decisions on levels of return on equity viewed commensurate with risks being undertaken. Modeling will include required reserve funds and debt service coverages, tax projections, and other considerations unique to each stakeholder. For this study, an engineering economics approach to annualizing the capital costs is used. The inputs to that simplified approach are included in Table 16-3.

Table 16-3

Annualized Capital Cost Assumptions

Debt-to-equity ratio	70/30
Duration of debt (put in place at commercial operation date)	15 years
Interest rate on debt	6%
Return on equity	12%

$$Annualized\ Capitial\ Cost = \left(Debt\ amount \times CRF_{15\ yrs}^{6\%}\right) + \left(Equity\ amount \times CRF_{20\ yrs}^{12\%}\right)$$

$$\$477\ mil \times 0.7 = \$333.9\ mil\ Debt$$

$$\$477\ mil \times 0.3 = \$143.1\ mil\ Equity$$

$$\$333.9\ mil\ \times 0.103 = \$34.40\ mil$$

$$\$\ 143.1\ mil\ \times 0.134 = \$19.20\ mil$$

$$Total\ Annualized\ Capital\ Cost = \$53.60\ mil$$

In this study, 15 years is selected for the debt period; this is typical for independent power projects (IPP) financing. Furthermore, 20 years is selected for the equity return to roughly match the projected Sherman NGCC life span.

16.4 OPEX Cost Estimate

The annual cost of operation and maintenance is based on the assumptions contained in Table 16-4. Details on the data behind these assumptions are provided in Chapter 12, Operation and Maintenance. Cost of personnel is similar to that experienced at the existing Sherman power plant. The cost of MEA is based on quotes obtained for bulk delivery to the Sherman site. The cost of energy is based on the prices actually received by the Sherman power plant for its generation.

Table 16-4

Basis of Operating Cost[6]

Operating hours per year (assumed at full PCC capacity)	5000 hrs
Level of operation	420 MW equivalent
Average value of reduced electricity sales to ERCOT ($/MWh)	$25/MWh
Electricity sales reduction (MW)	67.3 MW
Average total wage per person ($/yr)	$100,000/yr
MEA cost ($/kg)	$1.14/kg
Annual maintenance allowance (1% of contractor's cost) ($/yr)	$4.5 mil
Non-labor operation cost allowance ($/year)	$1.0 mil
Reclaimer bottoms disposal ($/tonne)	$500/tonne

16.5 Annual Operating Costs

The values in Table 16-4 are used to calculate the annual operations and maintenance costs developed in Table 16-5.

Table 16-5

Annual Operating Cost; Excludes Capital Cost Recovery

Energy (steam and electricity)	$5000\ \frac{hrs}{yr} \times 67.3\ MW \times \frac{\$25}{MWh} = \$8.4\ \frac{mil}{yr}$
Personnel	$40\ people \times \frac{\$100{,}000}{person \times yr} = \$4.0\ \frac{mil}{yr}$
Solvent	$\frac{\$1.14}{yr} \times \frac{2\ kg}{tonne\ CO_2} \times \frac{645{,}000\ tonne}{yr} = \$1.5\ \frac{mil}{yr}$
Maintenance allowance	$\$4.5\ \frac{mil}{yr}$
Admin allowance (parent company)	$\$1.0\ \frac{mil}{yr}$
Reclaimer waste disposal	$\frac{1732\ tonne}{yr} \times \frac{\$500}{tonne} = \$\ 0.87 \frac{mil}{yr}$
Annual operating cost	$\$20.30 \frac{mil}{yr}$

[6] Property taxes and insurance are not included.

The annual tonnes of CO_2 captured are estimated to be 645,000 tonnes per year. The cost per tonne of CO_2 captured based on the annual cost contained in Table 16-5 is reflected in Table 16-6.

Table 16-6

Annual Operating Cost; Costs per Tonne CO_2 Captured at 5,000 Hrs/Yr—Excludes Capital Cost Recovery

	$/tonne
Energy	13.00
Maintenance	7.00
Personnel	6.20
Solvent	2.30
Admin allowance	1.55
Waste disposal	1.35
Annual operating cost	31.40

16.6 Economics

The hours of operation that the PCC plant will operate each year have a significant impact on the annualized capital cost per tonne of CO_2 captured, as seen in Table 16-7.

Table 16-7

Operating Hours Impact on Capacity Factor and Capital Cost

Hours of PCC[7] Operation Per Year	Tonnes/yr CO_2 Captured	Capacity Factor	$/tonne CO_2 @ $53.6 mil[8] Annualized Capital Cost
5000	645,000	57%	83.10[9]
4000	516,000	46%	103.90
6000	774,000	68%	69.25
7750	1,000,000	88%	53.60

[7] Equivalent hours at full PCC capacity (129 tonnes/hr).

[8] See Section 16.3.

[9] See Table 16-9.

As can be seen in the example above, the over-estimation of the capacity factor (hours and rate of operation) of the PCC results is a dramatic under-estimation of the real capture cost.

The following economic review of the Sherman PCC project will be based on 5,000 hours per year of operation of the PCC at its full capacity (see Table 16-8). Although this may be overly optimistic in the context of the ERCOT market with its high rate of increase in renewable generation, the ancillaries market in ERCOT continues to evolve and may provide opportunities for additional generation hours at Sherman. [10] The capacity factor assumption requires detailed interrogation prior to the customer's financial investment decision.

Table 16-8

Total Annual Cost; 5,000 hrs per year basis

	$ mil/yr
Annualized capital cost (from Section 16.3)	53.6
Annual O&M cost (from Table 16-5)	20.3
Total annual cost	73.9

The sum of the annualized capital cost per tonne plus the annual operation and maintenance cost per tonne of CO_2 captured is shown in Table 16-9.

Table 16-9

Total Cost per Tonne CO_2 Captured (5000 hrs per year basis)

	$/Tonne CO_2
Annualized capital cost	83.10
Annual O&M cost	31.40
Total cost per tonne CO_2	114.50

16.6.1 Sensitivity Analysis

Sensitivity analyses were performed for the unit costs ($/t) shown in the tables above; these are shown in Table 16-10. The output is presented in terms of a "tornado" diagram (Figure 16-4) with the higher impacts shown at the top of the diagram.

Table 16-10

Cost Sensitivities and Uncertainty Levels

Item	Base	Range	Delta	Outcome
Units	$/Tonne CO_2	%	$/Tonne CO_2	$/Tonne CO_2
Capital cost	83.10	±15	±12.50	70.60–95.60
Energy	13.00	±20	±2.60	10.40–15.60
Maintenance	7.00	±50	±3.50	3.50–10.50
Personnel	6.20	±30	±1.90	4.30–8.10
Solvent	2.30	±50	±1.15	1.15–3.45
Other ops. allowance	1.55	±50	±0.80	0.80–2.40
Waste disposal	1.35	±50	±0.70	0.65–2.10

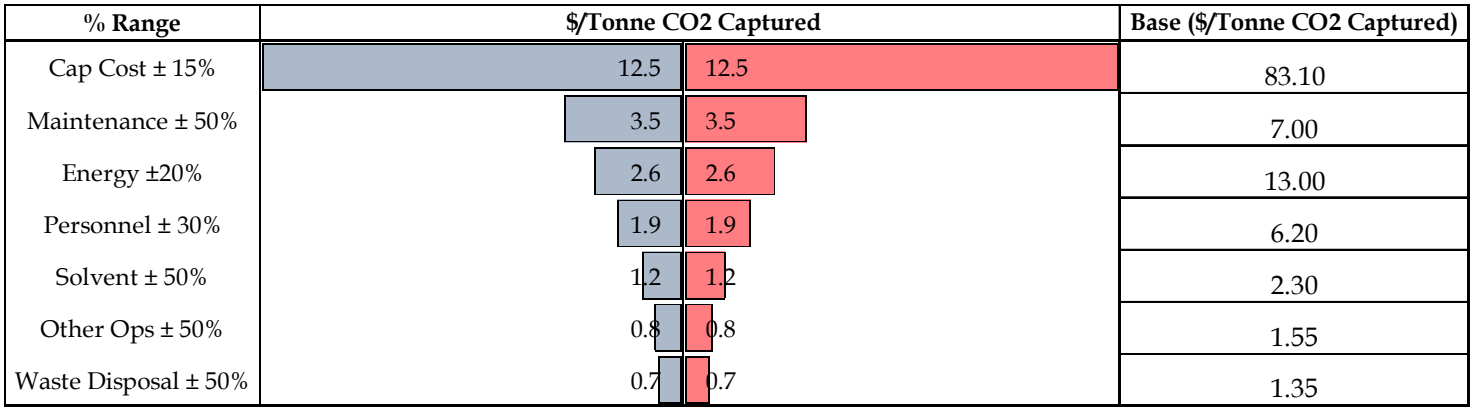

Figure 16-4

Cost Sensitivities and Uncertainty Levels Tornado Diagram

Chapter 17: Uncertainties and Optional Functionalities

The major uncertainties and design risks related to this front-end engineering design (FEED) package are presented in this section, together with a summary of design margins, pilot plant testing, and potential process enhancements.

17.1 Simulation Approach

The Sherman PCC plant design used ProMax® process simulation software to develop the mass and energy balances for the design operating case. Industry and academia also use a variety of similar commercially available software, such as ASPEN PLUS™ and ProTreat®, which were used to compare results. The CCSI Toolset (by NETL) was also applied to compare results using ASPEN PLUS™. Some differences in the results of simulation models were found, examples of which can be seen in Table 17-1. Additional discussion about comparison between different models is provided in Section 17.2.

Table 17-1

Comparison of Simulation Models

		ProMax®	CCSI/Aspen (10 m)	CCSI/Aspen (15 m)
Absorber packing height	m	15	10	15
CO_2 capture rate	%	85	85	85
Lean loading to absorber	molCO_2/mol MEA	0.254	0.15	0.216
Rich loading out of absorber	molCO_2/mol MEA	0.475	0.3976	0.4363
L/G ratio (includes semi-lean)	kg/kg	1.069	0.992*	1.069*
Reboiler heat input	MW	125.45	153.55	132.43
Specific heat consumption+	GJ/tCO_2	3.51	4.29	3.70
Stripper bottom temperature	C	131	130.46	128.57
Stripper top temperature	C	109.3	114.20	110.96
Stripper bottom pressure	bar	2.6	2.4	2.4
Stripper top pressure	bar	2.3	2.27	2.27

* Slightly lower energy requirements are predicted for lower lean loadings down to about 0.13 and correspondingly lower L/G ratios, see Table 17-6

+ Reboiler heat input only, additional 0.14 GJ/tCO_2 from compressor intercoolers is used for the rich flash

ProMax® Simulation

The basis for simulation for the Sherman NGCC power plant carbon capture plant is the approach Bechtel typically adopts for open art amine process designs in which equilibrium simulation is used to estimate theoretical stages and industry practice and tray/packing vendor feedback is used to determine preliminary column sizing. Detailed sizing is confirmed in conjunction with the selected tray/packing vendor because only it has

accurate performance data for the column internal design—and a vendor performance guarantee may be obtained.

The main features of the ProMax® simulation are:

- The absorber and stripper columns are modeled using an ideal stage model for the gas-liquid contacting and incorporating TSWEET kinetics in the aqueous phase. The ideal stage model is easy to use because a detailed equipment design is not required. The ideal stage model requires a minimum amount of data—only equilibrium relationships and enthalpy data for the heat balance. These are solved along with a material balance for each component and the requirement that the mole fractions in each phase sum to one.
- The assumptions of the ideal stage approach are that 1) the vapor and liquid are both perfectly mixed so that the vapor and liquid leaving a stage are at the same composition as the material on the stage and 2) thermodynamic equilibrium is obtained on each stage. Columns often do not operate under these conditions. The equilibrium assumption also means that liquid and vapor leaving a stage are at the same temperature—a reasonable approximation for many industrial columns.
- The TSWEET kinetics incorporated into the model are designed for amine absorption of acid gases to account for the rate-dependent kinetic effects of the slower reaction rate of CO_2 with amines and are required for accurate vapor-liquid equilibrium (VLE) predictions. TSWEET modifies CO_2 absorption by considering the effect of ionic dissociation kinetics on the amount of CO_2 that can be absorbed based on the column internals design, inlet conditions, and so on.

To use the ideal stage approach with columns that do not operate under these ideal assumptions, one of several types of efficiency approaches is normally used.

For packed columns, the Height Equivalent to a Theoretical Plate (HETP) approach is used to convert the number of theoretical trays to be used in an ideal stage simulation to the corresponding height of packing required. The number of ideal stages in the absorber was determined by ProMax® to be five to achieve 85% CO_2 capture. A typical estimate of HETP in amine service is about 2.0 m (6 ft) or 0.5 HETP/m. This analysis results in 10 m of absorption packing required.

More detailed work with the packing vendors has shown that the very high rich amine loadings desired in the absorber may not be achieved using these typical HETP values. The expected performance may more resemble the least efficient end of packing performance curves at 0.33 HETP/m, giving a bed height of 15 m. This excludes additional bed height that may be required for vendor and/or performance margins. Therefore, the base case ProMax® simulation of a 15-m absorption bed height was selected.

In addition to the typical absorber and regenerator/stripper column amine system design, the Sherman design has additional features captured in the ProMax® simulation:

- A wash water section in the absorber
- A water fogger provided to cool the absorber inlet flue gas stream
- A semi-lean amine split implemented to maximize amine loading and reduce amine circulation and thus reboiler steam consumption

ProMax® Simulation Sensitivities

Analysis of absorber and stripper performance identified the following optimizations in the ProMax® model:

1. With the stripper bottoms pressure of 2.3 bara, a sensitivity analysis showed that the optimum reflux ratio is 6% to minimize the lean amine CO_2 loading, which is then 0.265 (mol/mol).
2. A sensitivity analysis showed that 2.6 bara is the optimum stripper bottoms pressure to achieve the lowest lean amine CO_2 loading of 0.254 (mol/mol).
3. The absorber was found to achieve 85.0% CO_2 capture with a lean amine loading of 0.254 (which was determined to be the optimal lean amine loading in terms of stripper reboiler steam rate to obtain 85.0% CO_2 capture).
4. The absorber inlet conditions of 51°C with 11% mol water for the flue gas were confirmed as adequate for the desired performance—achieved by fogging the flue gas.
5. The amine split implemented to maximize amine loading and reduce amine circulation and thus reboiler steam consumption will be retained. The amine split diverts 20% of the rich amine from the stripper. The diverted rich amine is heated and flashed before returning as semi-lean amine to the

absorber with an amine loading of 0.434 mol CO_2/mol MEA. This split was shown to reduce reboiler duty by 0.5% to 4.0% and increase the energy efficiency of the plant.

6. Reducing lean amine and semi-lean amine temperatures before the absorber did not show noticeable performance benefits.

ProTreat® and Packing Vendor Simulation

ProTreat® is a rigorous rate-based simulator used by leading packing vendors in conjunction with their own knowledge of their structured packing designs and their own in-house carbon capture testing. During the procurement phase of the project, the selected packing vendor would be engaged for their recommendations on the final column internals design including packing type and depth. For this FEED study, one of the leading packing vendors was engaged to investigate absorber performance. The findings from this work determine the following:

1. The very high rich amine loadings desired in the absorber cannot be achieved using typical amine HETP values. Expected absorber performance approaches the least efficient end of packing performance curves at 0.33 HETP/m, giving an amine packing height of 15 m. This excludes additional bed height for vendor and/or performance margins, so a final amine packing height of 15–20 m could be contemplated.
2. The precise entry level of the semi-lean amine is not particularly sensitive to CO_2 recovery, so two similarly sized beds with a semi-lean inlet between the two amine packed beds is adequate.
3. Reduction of the lean and semi-lean amine inlet temperatures do not have noticeable benefit.
4. The most significant factor affecting performance (after amine circulation rate) is the lean amine loading; lower lean amine loadings permit either greater CO_2 capture or reduced packing height.

Aspen Plus Simulations

The Sherman absorber/stripper system has also been studied with the Aspen Plus V10 simulation model, using the current Carbon Capture Simulation Initiative (CCSI) data package. Results from these CCSI/Aspen studies indicate somewhat lower CO_2 recovery rates compared to ProMax® results. Table 17-2 presents CCSI/Aspen results for the Sherman absorber compared to the ProMax® base case conditions.

Table 17-2

Comparison of ProMax® and CCSI/Aspen Simulation Results

Packing Height, m	Lean Loading, mol/mol	CO_2 Capture Rate, %	Rich Loading, mol/mol	L/G kg/kg	L/G for 85%	Rich loading mol/mol
ProMax® Base Case: 5 stages/15 m	0.254	85.0	0.475	1.069	-	-
CCSI/Aspen:						
10	0.254	66.4	0.4267	1.068	2.1	0.3713
15	0.254	75.1	0.4457	1.066	1.367	0.4226
20	0.254	79.9	0.4561	1.066	1.175	0.4501
25	0.254	82.6	0.4621	1.065	1.106	0.4605
30	0.254	84.2	0.4656	1.065	1.077	0.4653
40	0.254	85.6	0.4688	1.064	1.056	0.4689
34.28	0.254	85.0	0.4674	1.065	-	-

As can be seen from the table, the CCSI/Aspen model indicates only 75.1% CO_2 capture when running the absorber at Sherman base case conditions. CCSI/Aspen predicts that CO_2 capture could be increased to 85% at base case amine flow rates if lean loading is reduced to about 0.216 versus the base case lean amine loading of 0.254, or at 0.254 lean loading if the L/G is increased to 1.367, with reduced rich loading. Reduced lean or rich amine loading and higher L/G would all be expected to require increased reboil duty at the stripper. CCSI/Aspen runs at close to the design conditions of 0.254 lean, 0.475 rich and L/G 1.069 show approximately 7% lower reboiler energy requirements than the ProMax® run at these conditions (see Table 17-6). But CCSI/Aspen also predicts that increasing packing height to a commercially infeasible 34.28 m at base case 0.254 lean loading and 1.065 L/G is required to achieve 85% CO_2 recovery rate and 0.467 rich loading and hence deliver this lower reboiler energy (note, the slightest differences in loadings and L/G to the stripper for the same capture rate are due to different flash performance predictions between ProMax® and CCSI/Aspen).

It is believed that the CCSI/Aspen absorber results are somewhat conservative, and the ProMax® simulation has been selected as the basis for the Sherman base case Heat and Material Balance (HMB). Considering the variation in simulation model results, it is strongly recommended that a pilot plant test program be implemented prior to the detailed design phase of the Sherman PCC project to determine actual CO_2 capture rates as a function of amine flow rates and lean loadings. A pilot plant concept is proposed in Section 17.6.

17.2 Simulation Uncertainties

17.2.1 Background

CO_2 capture from flue gases using MEA has been widely demonstrated, and the basic feasibility of the process and general trends for capture performance, energy consumption and so on are not in doubt. But the process parameters of this natural gas power plant application differ in several respects from the bulk of experience to date, which largely relates to capture from coal-fired power plants.

This has two major consequences:

1. For process modeling, which assumes fresh amine and clean equipment—as might be the case with initial plant acceptance trials—the modeling correlations (for example, for vapor-liquid equilibrium [VLE] and mass transfer rates) tend to be tuned for coal plant conditions. Modeling natural gas PCC plant performance may then effectively represent extrapolation beyond the data sets underpinning the models rather than interpolation within them.

   Examples of the possible differences from "typical" coal PCC MEA applications are shown below:

Parameter	Common Value	This Study
MEA concentration	30% w/w	35% w/w
CO_2 concentration	10–14% v/v	4% v/v
Capture rate	90%	85%
L/G ratio	~2:1	~1:1
Packing height	20 m or above	10–15 m

2. In addition, parameters that would not affect process modeling results but that will affect plant design and/or performance in service—particularly through the amounts and types of degradation products that might be estimated to occur based on pilot plant tests, compared again to "typical" coal plant operation—include those shown below:

Parameter	Common Value	This Study
Operating mode	Baseload	Variable, including possibly frequent stop/start
Reclaiming regime	None (in most pilot tests)	Continuous
Oxygen concentration	~5% v/v	12.5% v/v
SOx content	Possibly significant	Negligible
Ash content	Possibly significant	Negligible
NOx content	~50–100 mg/Nm^3	2 ppmv

The process modeling uncertainties for natural gas under new solvent and fresh plant conditions are not possible to quantify; currently there are no large-scale PCC plants operating on natural gas. In addition, pilot plant data under commercially attractive conditions (short packing

heights, low L/G ratios) as used in this study appear to be lacking. If process modeling predictions using different software were in close agreement with one another and matched process measurements, it would also suggest that uncertainties might be expected to be low—but, as described in the following section, several differences in exact values have been found during this study.

17.2.2 Modeling Software and Pilot Data Comparisons

Process modeling work at the University of Sheffield has used Aspen Plus V10 with the add-on model developed by the DOE CCSI.[10] The various developed user models contained in the library include physical property models for viscosity, density, surface tension, diffusivity, the hydraulics model, the interfacial area model, and the reaction kinetics model. As part of CCSI development, these sub-models have been integrated into a MEA steady-state process model representative of the configuration of the National Carbon Capture Center (NCCC) in Wilsonville, Alabama—for which data have been obtained to validate this model. The hydrodynamic models developed in the CCSI work include models for pressure drop and hold-up. The Billet and Schultes correlation is regressed with data from Tsai (2010) for MellapakPlus™ 250Y packing. [11]

Because the CCSI model uses rate-based modeling rather than assumed packing height per equilibrium-stage correlations, the estimates it gave for capture levels for a given absorber packing height were of particular interest. CCSI predictions for absorber packing height for the previous Kårstø FEED study were significantly larger than the estimates made at the time, 19.5 m instead of 10 m, for the same gas and solvent inlet and exit conditions. This apparently large packing height difference was investigated and is considered to be due to a combination of factors:

- A systematic underestimation of overall mass transfer performance in short beds for CCSI.
- Differences (relatively small) between VLE data for ProMax® and CCSI.
- The high sensitivity of packing height to capture rate at certain lean loading and L/G ratios—small changes in lean loading could achieve the same increase in capture rate as large changes in packing height. A bulge in the absorber temperature profile for both ProMax® and CCSI is observed at the top of the absorber. (Shown in Figure 17-1 and Figure 17-2.)

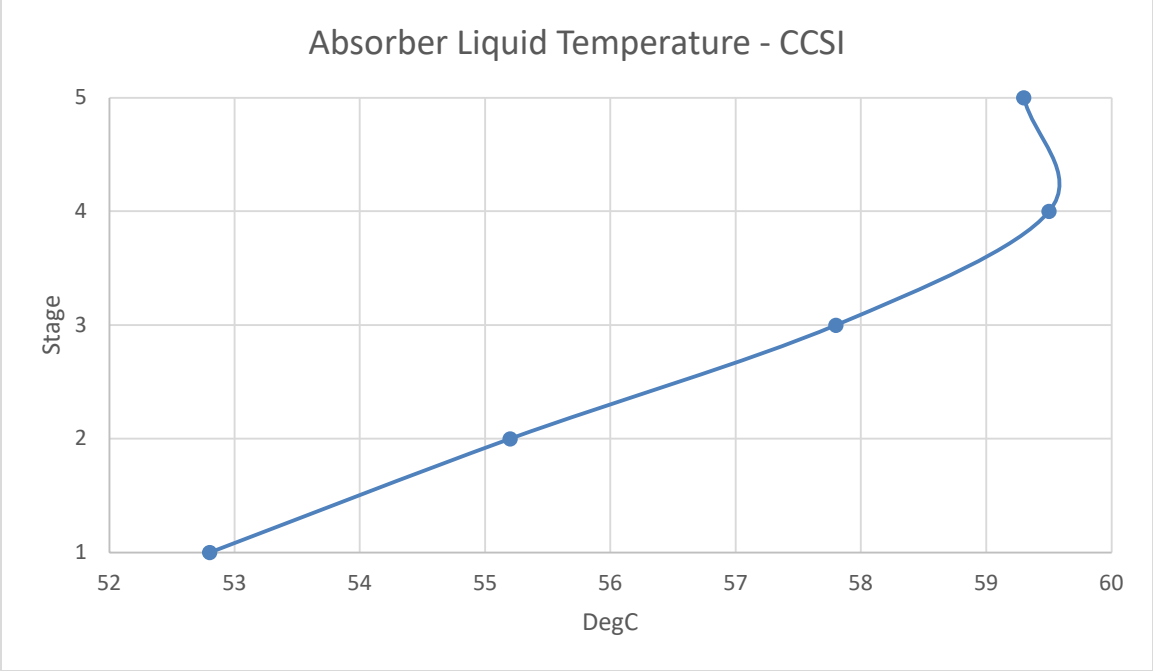

[10] https://github.com/CCSI-Toolset/ProcessModels_bundle

Figure 17-1

CCSI Model Absorber Liquid Temperature Profile

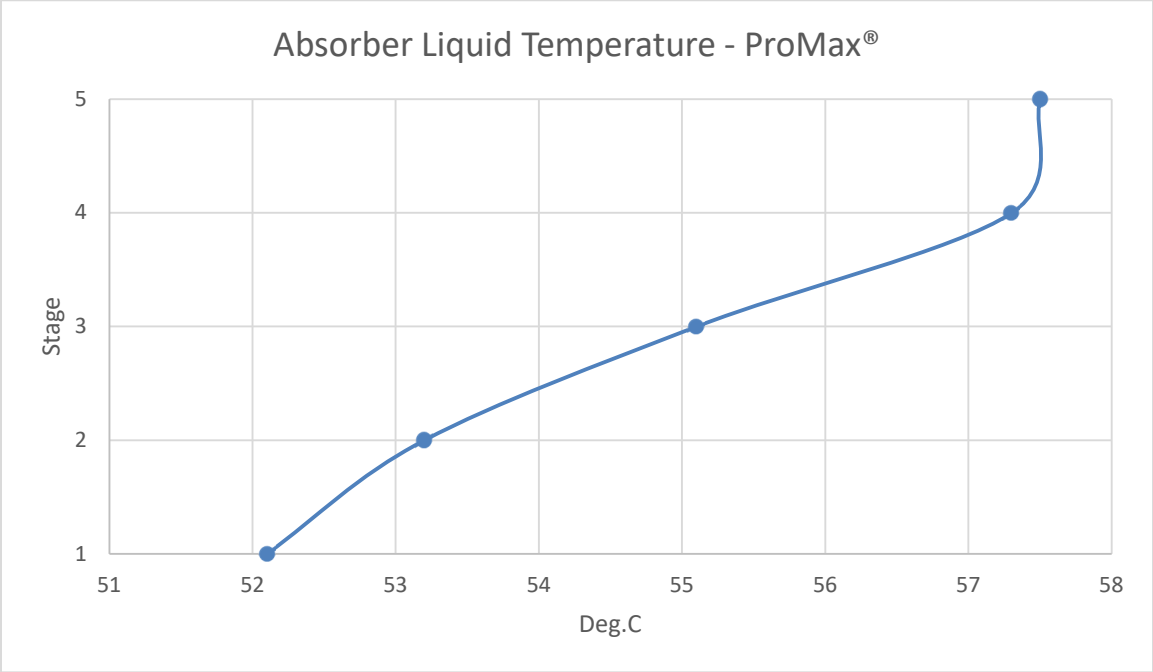

Figure 17-2

ProMax Model Absorber Liquid Temperature Profile

- **Systematic underestimation of overall mass transfer performance in short beds for CCSI**

  This is shown in Table 17-3, where NCCC test data are compared to results using mass transfer correlation from a version of the CCSI software implemented under Aspen 8.4 [12] and CCSI software implemented under Aspen 10 at the University of Sheffield. As can be seen, the CCSI/Aspen software systematically underpredicts performance for these short bed heights, which are only a small part of the data used to establish mass transfer correlations—most of the pilot test runs use 12 or 18 m of packing rather than a 6-m single bed (CCSI/Aspen V10 software also underpredicts capture rates more than the V8.4 version shown (Physical Property Modeling of Solvent-Based Carbon Capture Processes with Uncertainty Quantification and Validation with Pilot Plant Data, J. C. Morgan, 2017), reflecting some adjustment in correlations between versions). This overprediction of required bed height by 5–30% compared to pilot data for coal flue gas conditions suggests that the CCSI/Aspen V10 software might give similar overestimates in required packing height for a given capture rate for natural gas flue gases.

Table 17-3

Comparison Between NCCC 6-m Packing Data and CCSI Software Predictions

NCCC Data No.	L/G Ratio	Lean Loading (mol/mol)	Data Capture Ratio (%)	CCSI/Aspen V8.4 Capture Ratio (%)	CCSI/Aspen V10 Capture Ratio UoS (%)	Height to Match Data UoS (m)	Height to Match V8.4 UoS (m)
1C	3.10	0.15	97.1	95.4	95.4	7.2	6.1
2C	3.11	0.2	92.3	87.6	86.9	7.9	6.4
3C	3.73	0.25	89.5	84	82	8.8	6.7
4C	4.11	0.25	88.9	87.6	85.6	7.4	6.9
5C	3.50	0.26	86.4	87.3	85.8	6.4	6.7
6C	2.84	0.31	60.2	58.8	58.3	6.7	6.3
7C	5.41	0.34	76.4	78.8	76.7	6.1	6.6

- **Differences (relatively small) between VLE data for ProMax® and CCSI/Aspen and the high sensitivity of packing height to capture rate and lean loading**

  Comparisons between CCSI/Aspen V10 and ProMax® predictions for Sherman process conditions are shown in Tables 17-4, 17-5, and 17-6. As Table 17-4 shows, ProMax® predicts a higher rich loading to be achieved in five equilibrium stages than is calculated using CCSI's rate-based model for any practical packing height. This is seen as primarily due to a slight difference in VLE predictions between the two software packages. It was assumed that 3 m per equilibrium stage would be a conservative estimate, so packing height for Sherman was set at 15 m.

Table 17-4

Comparison, for a Fixed Lean Loading, Between Predicted CCSI/Aspen Capture Rates as a Function of Packing Height and ProMax® Equilibrium Stage Predictions

Packing Height, m	Lean Loading, mol/mol	Capture Ratio, %	Rich Loading, mol/mol	L/G ratio kg/kg
ProMax® Base Case: 5 stages/15 m	0.254	85.0	0.475	1.069
CCSI/Aspen:				
10	0.254	66.4	0.4267	1.068
15	0.254	75.1	0.4457	1.066
20	0.254	79.9	0.4561	1.066
25	0.254	82.6	0.4621	1.065
30	0.254	84.2	0.4656	1.065
40	0.254	85.6	0.4688	1.064
34.28	0.254	85.0	0.4674	1.065

Table 17-5 shows that, with a reduction in lean loading to approximately 0.16, CCSI/Aspen rate-based modeling predicts that the specified design 85% capture rate can be achieved with 15 m of packing.

Table 17-5

CCSI Capture Rate as a Function of Lean Loading with Variable L/G

Height, m	Lean Loading, ol/mol	Capture Ratio, %	Rich Loading, mol/mol	L/G kg/kg
15	0.22	85.0	0.4354	1.093
15	0.216	85.0	0.4363	1.069
15	0.21	85.0	0.4374	1.036

Table 17-6 shows CCSI stripper calculations, indicating that this is predicted to require a lower energy input than ProMax® calculations for identical loadings and solvent flow (although a separate analysis by Nexant suggests that the breakdown in stripper energy balance components may be different; see Appendix Z), but when absorber predictions for 15m of packing are included then the lower lean and rich loadings give higher stripper energy requirements, even for calculated optimum L/G ratio. Capture rates of 85% with 10m of packing are predicted to be feasible, with approximately 20% increase in energy over the 15 m case. This might be an advantageous trade-off under certain market conditions

Table 17-6

CCSI/Aspen Reboiler Duty as a Function of Lean and Rich Loadings and L/G ratio

	Rich Loading, mol/mol	Reboiler Duty, MW	Bottoms Temp, °C	Lean Loading, mol/mol	L/G kg/kg
ProMax®:	0.475	125.45	131	0.254	1.069
34.28 m packing	0.467	116.97	126.92	0.254	1.065
15 m, design L/G	0.436	132.43	128.57	0.216	1.069
15 m, min energy L/G	0.449	127.74	131.10	0.12	0.720
10 m, higher L/G	0.398	153.55	130.46	0.15	0.992
10 m, min energy L/G	0.401	151.06	130.87	0.13	0.905

These comparisons illustrate the importance of examining all dimensions of the process design, in particular, being prepared to exploit the scope for reducing packing heights more aggressively than appears to have been the case in most studies to date. This tendency toward the assumption of greater bed heights may be attributable to some or all of the following factors:

- **Conservative design.** Greater than necessary packing height has no impact on performance; lower packing height may.
- **Focus on energy use rather than CAPEX.** More packing tends to give slightly greater rich loading and therefore lower specific energy consumption but with greater CAPEX; however, CAPEX is much more important with natural gas flue gas (less CO_2 to capture) and plants that operate only intermittently.

It is extremely important that these trade-offs among energy requirements, capture rate, and packing height are fully understood and that no categorical assumptions are made—for example, that a certain minimum packing height is essential or that a maximum capture rate exists.

17.2.3 Modeling Uncertainties for Commercial Design

Although there appears to be good correlation between ProMax® and CCSI model predictions for overall design performance, when input parameters are slightly adjusted in an appropriate way, there are still uncertainties related to using these modeling software packages for commercial PCC plant design purposes:

- Neither model has been compared to pilot data obtained using 35% w/w MEA and over a similar range of L/G ratios, packing heights and so on and for natural gas power plant flue gases—and had internal correlations tuned if required to best match these conditions; the necessary pilot data do not appear to exist.
- These pilot data would also be able to indicate actual variation in performance under nominally constant process conditions; process modeling software gives misleadingly precise results (although stochastic modeling could indicate possible practical performance variation).
- During normal operation, the solvent and plant will not be fresh. Solvents will attain an equilibrium composition as degradation and buildup of impurities are matched by reclaiming. Fouling in service will degrade component performance (for example, heat exchangers, pumps, and fans); these effects can be assessed only by realistic long-term testing (see Section 17.4).
- The power plants and PCC plant will not be operated under steady-state design conditions; not only will operating parameters differ from the design cases, in practice they may change rapidly enough for the plant to never achieve complete steady-state operation as these process models assume. Transient modeling can indicate possible effects but again requires verification by comparison with long-term pilot or full-scale data and a good understanding of the variable conditions that will actually be applied.

In practice, however, it must be accepted that there will always be limits to what modeling can achieve for plant design and that uncertainties will need be addressed first by realistic piloting, if possible, and then by adding design margins (which can be reduced by piloting). The final tuning and assessment of plant performance then must take place in service, over several years of operation. Modeling—even if not 100% accurate—will obviously still be extremely useful to guide plant engineers during this in-service improvement stage.

17.3 CO_2 Compression

The strategy for compression is to minimize the number of stages of gas compression to achieve a dense phase fluid (at >74 bara) and allow the final boost to pipeline pressure to be achieved by pumping to reduce investment and operating costs. The simulation is constrained to a maximum compressor stage discharge temperature of 177°C to represent expected mechanical limitations; this sets the interstage pressures. The CO_2 is maintained in the gas phase until the supercritical region is reached.

The benefit of compression and cooling is used to stage-wise condense water and dry the CO_2, minimizing the water load to the desiccant dryer package—which is located after the second-stage compressor. This achieves an optimal balance between the reduced water load after each compression stage versus the higher investment cost of higher pressure rated equipment.

17.4 Emissions, Solvent Degradation, and Reclaiming

17.4.1 Emissions

Estimated airborne emissions from each of the two absorber vent stacks during design PCC plant operations are listed in Section 3.5.1. The estimated MEA, NO, and NO_2 emissions are as calculated by the ProMax® base case simulation based on design flue gas feed rate and composition and on the calculated vapor-liquid equilibrium for these components within the absorber/stripper system. The calculated ammonia emissions sourced from the flue gas feed are 4.6 kg/hr per absorber. An allowance of 3.2 kg/hr per absorber has been added for ammonia formed during MEA degradation in the absorber/stripper system, giving an estimated total ammonia emissions rate of 7.8 kg/hr per absorber or 15.6 kg/hr total for the PCC plant.

These emissions rates are based on the given design bases, simulation calculations, and/or assumed amine degradation rates and are therefore somewhat uncertain. Actual emissions rates at the Sherman PCC plant can be confirmed only by actual full-scale operations. Early pilot testing of the PCC plant absorber/stripper system is

recommended to generate actual emissions data during absorber/stripper operations, which should permit detailed design assessment of probable full-scale emissions levels. One of the primary objectives of the pilot test program (described in Section 17.6) is to confirm airborne emissions rates during extended operations and evaluate the impact of PCC plant operating conditions (for example, liquid residence times, stripper reboiler temperature, frequent shutdowns/restarts) on emissions.

17.4.2 Solvent Degradation

The primary solvent degradation products generated during absorber/stripper operations are heat-stable salts (HSS) and thermal degradation products. The HSS are formed by oxidation of MEA, which produces organic acids that then tie up MEA as heat-stable organic salts. Thermal degradation products are decomposition/ condensation/polymerization products, primarily formed in the stripper column at temperatures above 100°C.

The generation rate and composition of degradation products for the Sherman PCC plant have been estimated based on reported operating data from the 2015 Mongstad pilot test program in Norway. The Mongstad test program showed solvent degradation rates to be essentially linear with operating time over a 78-day test period. The Mongstad data were adjusted to reflect the design operating conditions at Sherman, reflecting differences in MEA solvent strength, flue gas oxygen content, absorber and stripper operating temperatures, and liquid residence times. The estimated rates and composition of solvent degradation products are documented in the Package Data Sheet: Amine Reclaimer (26301-000-MSD-CN-00054). Actual degradation rates and compositions at the Sherman PCC plant can be confirmed only by actual full-scale operations. Early pilot testing of the PCC plant absorber/stripper system is recommended to generate actual degradation data during pilot absorber/stripper operations, which should permit detailed design assessment of probable full-scale degradation rates and compositions. One of the primary objectives of the pilot test program described in Section 17.6 is to confirm degradation rates and composition during extended operations and evaluate the impact of PCC plant operating conditions (liquid residence times, stripper reboiler temperature, frequent shutdowns/restarts) on solvent degradation.

17.4.3 Reclaiming

The Sherman reclaimer design is documented in the Package Data Sheet: Amine Reclaimer (26301-000-MSD-CN-00054 in Appendix G). The reclaimer is a two-stage, dual-pressure, continuous reclaimer design; reclaimer feed is hot lean amine from stripper bottoms at 131.0°C. The first-stage flash operates on lean amine feed only at 150°C and 2.62 bara, venting flash vapor directly to the stripper column. Liquid from the first-stage flash is mixed with injection water and charged to the second stage. The second-stage flash operates at 150°C and 1.10 bara, venting through a water-cooled condenser and knockout (KO) drum to one of the absorber columns. Amine-rich condensate from the KO drum is pumped to the lean amine tank. Liquid residue from the second-stage flash is quenched with cold water and pumped to a tanker truck or trailer for off-site disposal.

The proposed pilot plant reclaimer has a simplified process flow scheme, based on single-stage continuous flash operation at 150°C, as detailed in Section 17.6.

The mass and energy balances for the full-scale and pilot plant Sherman reclaimers are based on Aspen-Plus simulation runs. Although we expect these balances to be accurate, actual flash compositions during reclaiming need to be confirmed by actual operations. In addition, potential for foaming in the reclaimer flash drums should be tested, and the fouling rate of the reclaimer flash heat exchangers operating at 150°C needs confirmation. These uncertainties can be confirmed only by actual full-scale operations. Early pilot testing of the PCC plant reclaimer system is recommended to permit detailed design assessment of probable full-scale reclaiming operations as well as adjustment to reclaimer feed rates, holdup times, and foam control if needed.

17.5 Design Margins

Design margins are applied to increase certainty that the plant will meet its design specifications despite uncertainties in the process and mechanical design. In particular, the designer or vendor will apply design margins wherever a performance guarantee is demanded. Design margins should be applied carefully because they result in oversizing equipment, resulting in additional investment cost and normal operation away from best efficiency points.

17.5.1 Columns

No overall design margin is applied to the columns, but the final packing design will incorporate necessary vendor and performance margins for packing height and pressure drop. In addition, a flooding limit of maximum 80% used in the current design provides a significant capacity margin.

17.5.2 Rotating Equipment

A hydraulic performance guarantee would be expected for all flowing lines, including pump and compressor circuits. A margin of 10% on top of the design (guaranteed) flow is normally applied, giving a rated flow of 110% design. In addition, designing for minimum suction pressure (that is, low liquid level) and maximum discharge pressure provides additional margin under normal conditions. In-line equipment such as filters are also rated for 110% design flow.

17.5.3 Vessels

Vessels are sized for 110% of design vapor and liquid flows.

17.5.4 Shell-and-Tube Exchangers

A 10% design margin on both flowrate and duty is provided in addition to accounting for fouling in the thermal design.

17.5.6 Plate and Frame Exchangers

Because the thermal design of plate-and-frame heat exchangers is sensitive to velocity, it is important to avoid overdesigning the exchanger. Because applying a thermal fouling factor is not appropriate to this type of exchanger, a margin of 10% to allow for fouling is provided according to API Std.662: "Conventional fouling-resistance values used with shell-and-tube heat exchangers should not be used in the thermal design of plate-and-frame heat exchangers. A minimum of 10% fouling margin should be included." (API Std. 662 [ISO 15547-1:2005, Petroleum, petrochemical and natural gas industries-Plate-type heat exchangers-Part 1: Plate-and-frame heat exchangers.])

An additional design margin of only 5% is added on both flow and duty. During the procurement phase, care should be taken to determine whether this margin is appropriate if it pushes the size selection to the next frame size. The stripper reboilers are particularly sensitive to the logarithmic mean temperature difference (LMTD), so close attention should be paid to ensuring adequate margin in the LMTD (where 1°C LMTD represents 20–25% exchanger area increase) rather than to the margin on the area itself.

17.6 Pilot Plant Testing

A pilot testing program is proposed to resolve most of the design uncertainties discussed in Sections 17.1 and 17.3 and to confirm design assumptions and operating conditions for the Sherman carbon capture and compression (PCC) unit. The pilot plant will generally duplicate all process elements of the full-scale PCC unit, except that it will not include a CO_2 product compression section. From a process operations standpoint, the CO_2 compression section is virtually independent from the carbon capture process and is considered sufficiently demonstrated at commercial scale to preclude the need for pilot demonstration.

The proposed pilot plant scope includes the following:

- Flue gas blower with cooling by single-stage water injection fogging
- One absorber column, including water wash section
- Stripper with thermosiphon reboiler, condenser, and reflux drum
- Semi-lean amine flash system
- Rich/lean amine heat exchange
- Associated pumps, coolers, controls and sampling capability, and emission testing
- Reclaimer system

The pilot plant will operate solely on flue gas from the Sherman power plant. Because the Sherman plant is a non-base-loaded power plant that has typically run at a 60–65% capacity factor, frequent shutdowns of up to 48 hours are expected. The pilot plant will therefore experience frequent loss of flue gas feed, requiring frequent planned shutdowns and restarts. Operating the pilot plant on a non-baseload basis is important because frequent shutdowns and restarts can potentially impact PCC solvent quality and overall system performance. The power plant will provide steam and cooling water as needed to operate the pilot plant.

17.6.1 Pilot Plant Equipment Size

The pilot plant size has been tentatively selected based on an absorber column diameter of 1 m, which will ensure that test results can be credibly scaled up by

from pilot plant to full-scale plant of 1:278.5, based on prorating the cross-sectional area of the full-scale absorber columns to the single pilot absorber at 1 m diameter (scaling ratio = $(11.8^2 + 11.8^2)/(1.0^2) = 278.5$). Based on applying this scale-up ratio to the Sherman PCC base case design, major equipment sizes and flow rates for the pilot plant are as follows:

- Absorber ID = 1.0 m = 40”
- Stripper ID = 0.4 m = 16”
- Semi-lean flash drum ID = 0.3 m = 12”
- Hot flue gas from power plant = 9,100 kg/hr
- Quantity of CO_2 captured = 462 kg/hr @ 85% capture
- Fogging water = 125 kg/hr
- Lean amine to absorber = 7968 kg/hr or 7.64 m^3/hr or 34 gpm
- Rich amine from absorber = 10,159 kg/hr or 8.76 m^3/hr or 39 gpm
- Rich amine to semi-lean flash = 20% or 2,030 kg/hr or 1.75 m^3/hr or 8 gpm

column packing vendors to the full-size PCC unit. It results in a stripper column of 0.4 m, which is considered by some packing vendors as the minimum diameter for meaningful test data. This results in a scale-up factor

- Stripper reflux = 29.1 kg/hr
- 3.13 bara steam to stripper reboiler = 747 kg/hr

The tangent-tangent height of the pilot plant absorber vessel, including space for three absorption beds totaling 20 m of absorption packing, will be about 36 m compared to the full-scale vessels at 44.3 m, reflecting the reduced space needed for packing supports, inlet ducting, and disengaging space with a 1-m diameter vessel. For similar reasons, the pilot plant stripper vessel will be about 40 m high compared to the full-size stripper at 43.6 m. It is planned to oversize the pilot plant pumps, blower, and heat exchangers by at least 25% to ensure flexibility to test off-normal operations. The pilot plant will also have lean and rich amine storage tanks of about 7.5 m^3 capacity each, an amine sump and containment system, a small on-site laboratory area for solvent and gas analyses, and a small maintenance shop.

Final scoping, layout, equipment design, and operational results of the Sherman pilot plant will be confirmed prior to start of the detailed design stage of the project.

A simplified process flow diagram for the Sherman pilot plant is shown in Figure 17-3.

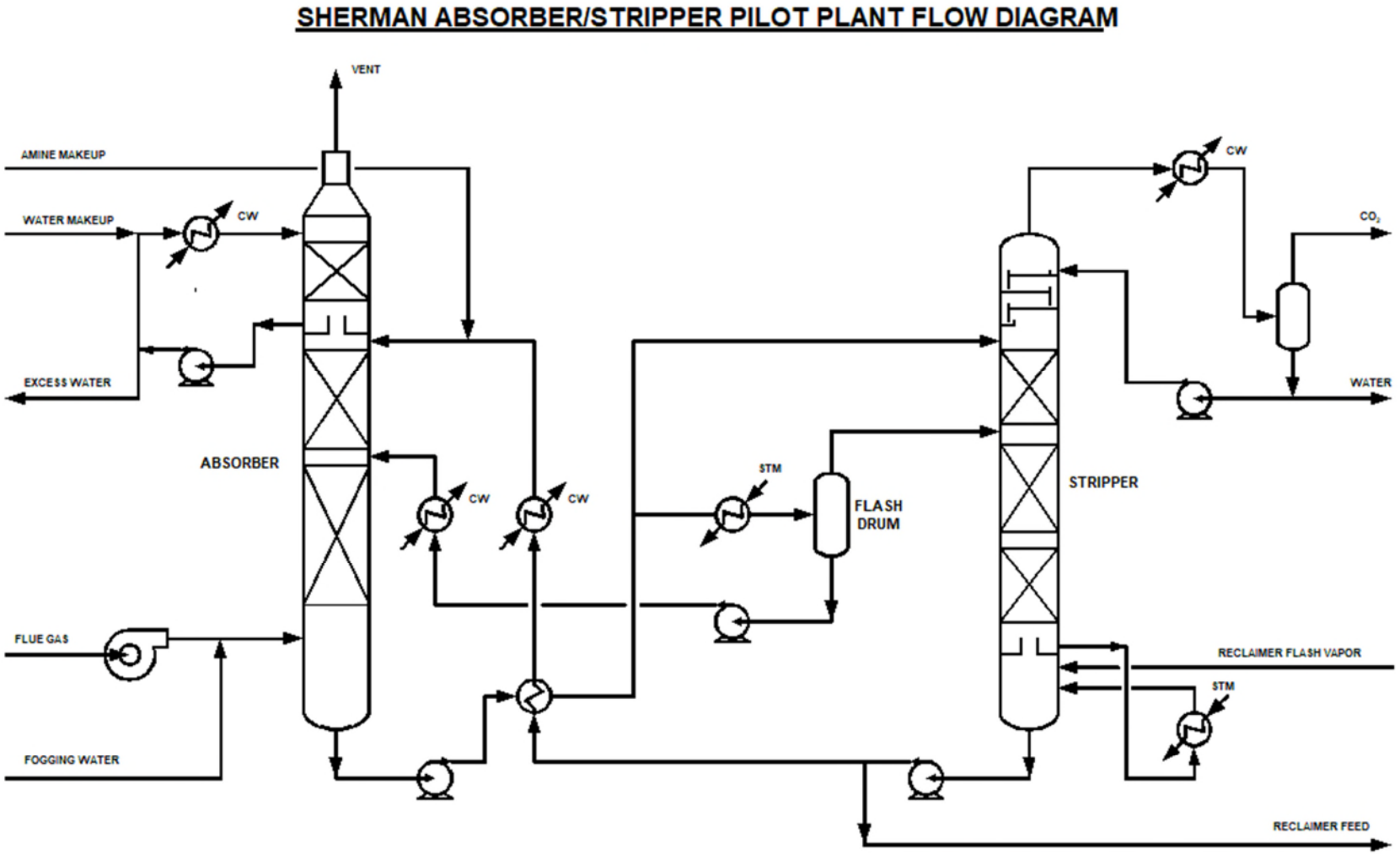

Figure 17-3

Process Flow Diagram for Pilot Plant

17.6.2 Pilot Test Objectives

The primary pilot plant test objectives are as follows:

1. Confirm the base case mass and energy balances for the PCC unit at design flue gas feed rates, including CO_2 recovery, lean and rich amine loadings, lean and rich amine circulation rates, stripper reboil and reflux rates, and overall system water balance at base case absorber packing height of 15 m. Some simulation studies have indicated that it may be desirable to reduce the lean amine CO_2 loading (increase reboil rate) and/or increase the lean amine flow rate to obtain desired CO_2 recovery. These options can be tested during a long-term pilot program. Because simulation studies have also indicated that base case absorber performance may require more or less than 15 m of packing, the pilot absorber will be designed to allow testing with an absorber section packing height of 10, 15, or 20 m.
2. Confirm generation rates and compositions for HSS and for thermal degradation products in the MEA solvent during long-term PCC operations, including whether degradation is generally linear with operating time. In addition, confirm that a continuous thermal reclaimer can maintain suitable amine quality during a long-term (12-month) run, and confirm long-term amine consumption rates. To produce credible degradation rates during pilot testing, liquid holdup times in the absorber, stripper, flash drum, and reclaimer vessels will be controlled to match the normal holdup times in the full-scale plant. Limited testing at reduced liquid holdup times can also be performed to determine the impact on amine degradation rates and on ammonia emissions.
3. Confirm emissions levels of MEA, ammonia, and precursors of nitrosamines in the absorber vent gas during long-term operations.
4. Determine equipment corrosion rates and confirm materials selection for the full-scale PCC unit. Demonstrate the ability to handle frequent shutdowns and restarts of the PCC unit while maintaining solvent quality, controlling emissions, and maintaining equipment performance.

In addition to these four primary objectives, several less critical test objectives could be investigated during long-term pilot testing. Some of these added tests may require modifications to pilot test equipment.

- Confirm stripper operation at reduced packing heights. Because simulation studies have indicated that base case stripper performance may not require the full 20 m of packing specified for the stripper, we may elect to test the stripper with reduced packing height of, say, only 12 or 15 m. This is somewhat tempered by the Aspen 10-CCSI simulation run, showing 0.232 lean loading at the current steam flow to the reboil system.
- Check PCC unit operation without the semi-lean amine system. This test, which should require no new pilot test equipment, would confirm the efficacy of the semi-lean system and whether the minimal capital investment associated with this system is justified.
- Check amine degradation rates when operating the stripper at lower pressure, which will lower stripper bottoms temperature. Operation of the stripper at reboiler pressures down to 2.0 bara (vs. 2.6 bara design) should be possible without changes in equipment size.

17.6.3 Pilot Test Duration

Initial confirmation of CO_2 recovery and heat and mass balances for the PCC unit should be possible with a 30- to 60-day pilot test program. However, credible confirmation of amine degradation rates, reclaiming effectiveness, emissions rates, and system corrosion should be based on at least a 12-month run. Because we expect that several test campaigns will be planned to evaluate the effect of lean amine loading and lean amine circulation rates—plus possibly some runs at reduced or increased packing heights—we expect the overall pilot test program to be planned for an 18- to 24-month schedule.

17.6.4 Pilot Reclaimer System

The base case reclaimer for the full-scale PCC unit is a continuous, two-stage, dual-pressure thermal reclaimer system, designed to recover >90% of the MEA contained in reclaimer feed. This base case system is complex but energy efficient, consisting of three flash/KO drums, three pumps, two reboilers, and a condenser. For the pilot plant, we propose a simpler, single-stage continuous thermal reclaimer system, consisting of only a single flash drum with recirculation pump and reboiler. This single-stage pilot reclaimer will also recover >90% MEA but uses more steam and injects more stripping water per unit of solvent treated. The single-stage pilot reclaimer

feed is lean amine (stripper bottoms) plus caustic solution plus 150 wt% injection water; the full-scale two-stage reclaimer uses only 30 wt% injection water. The mixed feed stream to the single-stage reclaimer is flashed at 150°C and stripper pressure, venting all flash gas back to the stripper—the same as the first stage of the full-scale reclaimer. Residence time at temperature for feed and residue in the single-stage pilot reclaimer will be adjusted to match the overall time-temperature conditions of the full-scale base case reclaimer. This alternative pilot plant reclaimer design should provide credible data on amine recovery and degradation rates compared to the base case reclaimer design, without the complexity of the two-stage, dual-pressure system. During detailed design of the full-scale Sherman PCC unit, we plan to further consider the use of a single-stage reclaimer system.

A simplified process flow diagram of the single-stage pilot reclaimer is shown as Figure 17-4.

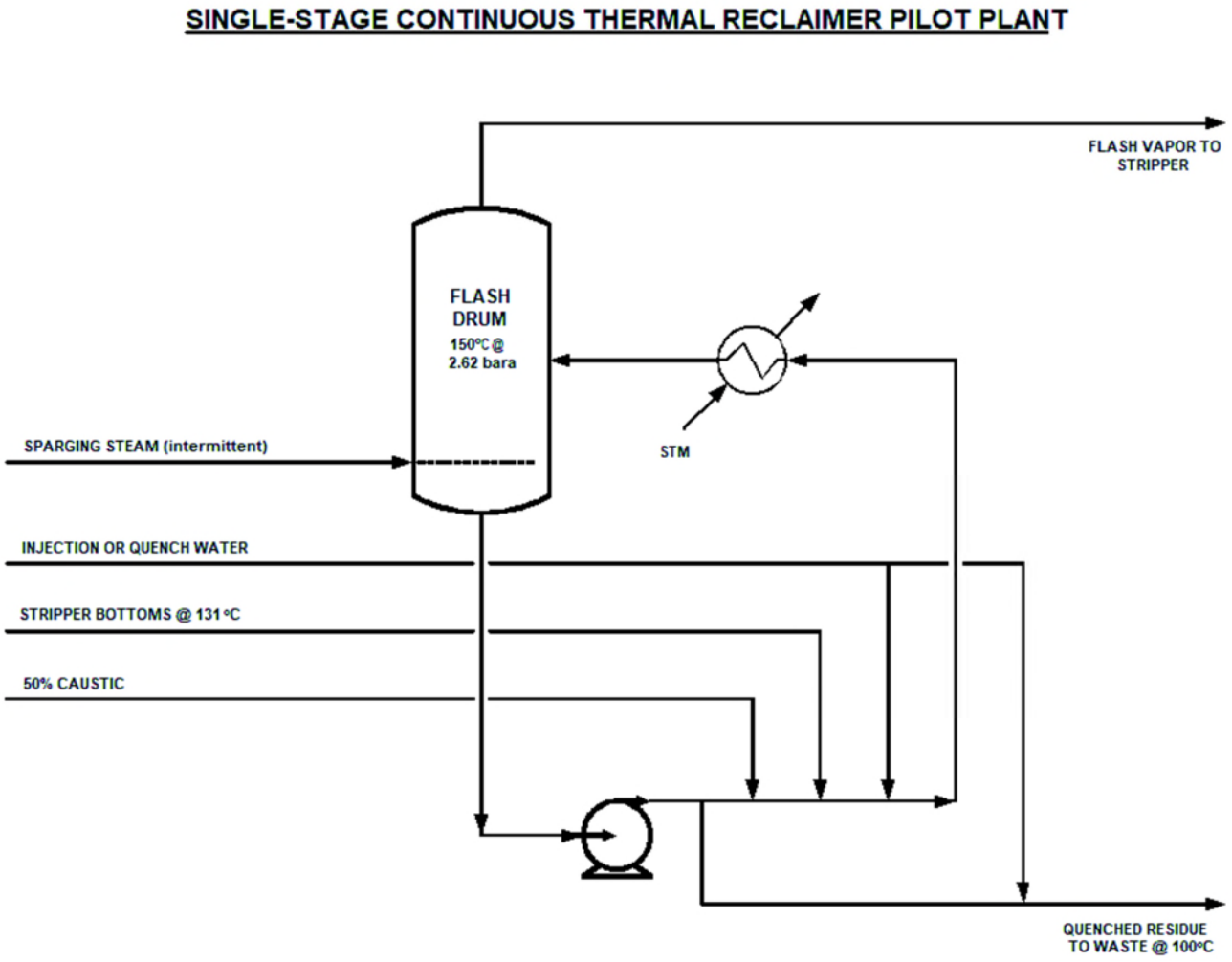

Figure 17-4

Process Flow Diagram for Single-Stage Pilot Reclaimer

Expected equipment sizes and flow rates for the single-stage pilot reclaimer are listed next. The pilot reclaimer system could be readily designed as a single equipment skid.

- Flash drum = 0.25 m ID x 1.5 m tan/tan = 10” x 5’- 0”
- Recirculating pump = 750 kg/hr = 0.7 m^3/hr = 3 gpm
- Reboiler = 1.6 m^2 surface area (probably two 20’ double-pipe hairpins)
- Lean amine feed rate = 9.3 kg/hr
- Water injection to feed = 14.0 kg/hr
- 50% caustic injection to feed = 120 g/hr

- Total reclaimer feed = 23.4 kg/hr
- Flash vapor returned to stripper = 22.4 kg/hr
- Quenched residue produced to waste = 1.5 kg/hr
- 7.0 bara steam to reboiler = 29 kg/hr

17.7 Process Scheme Enhancements

This section presents several possible improvements to the Sherman PCC plant process scheme that are not part of this FEED report but that have potential to improve the design, increase recovery, and/or reduce capital or operating costs. It is recommended that these improvements or enhancements be studied during the detailed design phase of the Sherman project.

17.7.1 PCC Plant Mass and Energy Balance Including Continuous Reclaimer Operation

The current base case HMB (26301-000-M4-CN-00001), based on ProMax®, does not include the reclaimer operation and therefore excludes the effects of MEA solvent degradation such as buildup of degradation products in the circulating amine solvent, generation of ammonia, and increased solvent viscosity. These effects are not expected to impact PCC plant equipment design by more than a few percent but should be quantified in a full plant simulation run. A rerun of this base case simulation that includes these effects during the detailed design phase would provide a more accurate HMB for final plant design. Data from the extended reclaimer run during pilot plant operations should also provide at least qualitative insights.

17.7.2 Single-Stage Continuous Reclaimer

The base case PCC plant design is based on a two-stage, dual-pressure continuous reclaimer. An alternative single-stage continuous reclaimer design has been proposed, operating at 2.62 bara and 150°C and venting all flashed vapor back to the stripper. This single-stage concept is briefly described in Section 17.6. A full-scale single-stage reclaimer may be less costly and easier to operate than the two-stage unit, although its impact on the stripper heat balance and the plant water balance must be evaluated. This option should be considered in more detail during the detailed design phase of the Sherman project.

17.7.3 Stripper Operation at Lower Reboiler Pressure

Final input from packing vendors has indicated that the stripper reboiler pressure can be reduced by about 0.2 bar (from 2.6 to 2.4 bara) while maintaining the same CO_2 compressor suction conditions. This would reduce stripper bottoms temperature from 131°C to about 129°C, which would increase the mean temperature difference in the reboiler and reduce reboiler size and cost. The lower reboil temperature would also reduce thermal degradation of MEA in the stripper and improve reclaimer operations. This option should be evaluated in detail during the detailed design phase of the Sherman project.

17.7.4 Semi-Lean Amine System Optimization

The base case Sherman PCC plant diverts 20% of the total rich amine stream to a semi-lean flash system, as described in Chapter 3 of this report. This semi-lean system provides for efficient use of low-pressure steam generated in the CO_2 compression section and therefore reduces net external steam demand for the plant. Based on the preliminary simulation studies for Sherman, it has been proposed that this scheme may be amenable to simplification or further optimization. The low-pressure steam could also be used in the rich amine heat exchange train or in a side reboiler on the stripper. This option should be evaluated in more detail during the detailed design phase of the Sherman project.

17.7.5 Alternative Water Source for Flue Gas Foggers

Cooling of hot flue gas feed to the PCC plant is done by injecting distillate water into the inlet ducting through fogging nozzles. Cooling tower (CT) blowdown water from the Sherman power plant is an alternative water source for these foggers. Use of blowdown water would reduce the electric (vapor compressor) load on the power plant zero discharge unit and reduce overall system operating costs. Distillate water fogging was selected for the base case PCC plant design because of concern that the high solids content of the CT blowdown might cause solids buildup on the blower fans, leading to excess fan maintenance and reduced reliability. It is proposed that a small fogger unit be installed ahead of the pilot plant blower to demonstrate operability of CT blowdown fogging during long-term (>12-month) pilot operations. If the pilot test is successful, CT blowdown in the full-scale PCC plant can be implemented.

17.7.6 Oxygen Removal from Product Carbon Dioxide

Oxygen content of product CO_2 is projected to be 72 ppmv, which is within the Sherman design specification. Depending on the ultimate disposition of the product CO_2 (that is, enhanced oil recovery, alkaline aquifer sequestration, and so on), oxygen content may have to be reduced. Lower oxygen content CO_2 would require an oxygen removal step, for which the commercially available technology is catalytic oxidation. This would require an additional treatment package system with a small injection of hydrogen or methane with which the oxygen would react. This treatment package would be located upstream of the desiccant dryer, putting additional water load on the dryer and additional pressure drop between compressor stages. This option should be evaluated in more detail during the detailed design phase of the Sherman project.

17.8 Design Codes and Standards

Traditional amine units have been designed and constructed in oil and gas plants, which contain flammable hydrocarbons, and the codes and standards selected for engineering and procurement reflect this history—focusing on API codes, for example. For the Sherman plant, the amine unit does not contain flammable hydrocarbons, and so there may be an opportunity to select codes and standards from other industries that are more relevant and that would result in a less costly and less complex plant and equipment. It is proposed that a review of the applicable codes from related industries be conducted to ensure that the most relevant and cost-effective code is applied prior to detailed engineering and procurement. One area of attention should be pressure relief design because the absence of the scenario of a major pool fire renders the widespread application of pressure safety valves unnecessary. Although MEA is combustible, it should be confirmed whether the scenario of major pool fire is credible and whether the widespread provision of pressure safety valves can be reduced in conjunction with the intrinsically safe design aspects already incorporated into the design.

Chapter 18: References

In Text Cited References

[1] R. (. C. Bottoms, "Separating Acid Gases.". United States Patent 1783901, 1930.

[2] E. Gjernes, S. Pedersen, T. Cents, G. Watson, B. Fostås, M. Shah, G. Lombardo, C. Desvignes, N. Flø, A. Morken, T. de Cazenove, L. Faramarzi and E. Hamborg, "Results from 30 wt% MEA Performance Testing at the CO2 Technology Centre Mongstad," *Energy Procedia*, vol. 114, no. ISSN 1876-6102, pp. 1146-1157, 2017.

[3] Bechtel Power Corporation, "CO2 Capture Facility at Karsto, Norway FEED Report," 2009. [Online]. Available: https://ukccsrc.ac.uk/wp-content/uploads/2020/03/8.5-x-11-Full-Karsto-FEED-Study-Report-Redacted-Updated_OCR-1.pdf.

[4] DOE, NETL, "Carbon Storage Atlas," 2015. [Online]. Available: https://www.netl.doe.gov/coal/carbon-storage/strategic-program-support/natcarb-atlas.

[5] N. e. a. Flø, "Results from MEA Degradation and Reclaiming Processes at the CO2 Technology Centre Mongstad," *Energy Procedia, Elsevier*, no. www.sciencedirect.com/science/article/pii/S1876610217321021, 2017.

[6] A. Morken, S. Pedersen, E. Kleppe, A. Wisthaler, K. Vernstad, Ø. Ullestad, N. Flø, L. Faramarzi and E. Hamborg, "Degradation and Emission Results of Amine Plant Operations from MEA Testing at the CO2 Technology Centre Mongstad," *Energy Procedia (GHGT-13)* , vol. 114, no. https://doi.org/10.1016/j.egypro.2017.03.1379, pp. 1245-1262, 2017.

[7] E. Gjernes, S. Pedersen, T. Cents, G. Watson, B. Fostås, M. Shah, G. Lombardo, C. Desvignes, N. Flø, A. Morken, T. de Cazenove, L. Faramarzi and E. Hamborg, "Results from 30 wt% MEA Performance Testing at the CO2 Technology Centre Mongstad," *Energy Procedia*, vol. 114, no. ISSN 1876-6102, https://doi.org/10.1016/j.egypro.2017.03.1276, pp. 1146-1157, 2017.

[8] North American Electric Reliability Corporation (NERC), "Generating Availability Data System (GADS)," 2019. [Online]. Available: https://www.nerc.com/pa/RAPA/gads/Pages/Reports.aspx. [Accessed 2020].

[9] OREDA, Offshore and onshore reliability data handbook (6th ed.), OREDA, 2015.

[10] Electric Reliability Council of Texas (ERCOT), "Report on the Capacity, Demand and Reserves (CDR) in the ERCOT Region, 2021-2030 (Rep.)," 16 December 2020. [Online]. Available: http://www.ercot.com/content/wcm/lists/197379/CapacityDemandandReservesReport_Dec2020.pdf. [Accessed 20 December 2020].

[11] R. Tsai, Mass transfer area of structured packing, The University of Texas at Austin, 2010.

[12] J. Morgan, "Physical Property Modeling of Solvent-Based Carbon Capture Processes with Uncertainty Quantification and Validation with Pilot Plant Data," Graduate Theses, Dissertations, and Problem Reports. 6262, 2017.

[13] J. Morgan, "Physical Property Modeling of Solvent-Based Carbon Capture Processes with Uncertainty Quantification and Validation with Pilot Plant Data," 2017.

Additional References Used in this Study but not Cited in Text

L. Faramarzi, D. Thimsen, S.Hume, A. Maxon, G. Watson, S. Pedersen, E. Gjernes, B. F. Fostås, G. Lombardo, T.Cents, A. K. Morken, M. I. Shah, T. de Cazenove, E. S. Hamborg, Results from MEA Testing at the CO2 Technology Centre Mongstad: Verification of Baseline Results in 2015, *Energy Procedia*, Volume 114, 2017, Pages 1128-1145, ISSN 1876-6102, https://doi.org/10.1016/j.egypro.2017.03.1271.

E. Gjernes, S. Pedersen, T. Cents, G. Watson, B. F. Fostås, M. I. Shah, G. Lombardo, C. Desvignes, N. E. Flø, A. K. Morken, T. de Cazenove, L. Faramarzi, E. S. Hamborg, Results from 30 wt% MEA Performance Testing at the CO2 Technology Centre Mongstad, *Energy Procedia*, Volume 114, 2017, Pages 1146-1157, ISSN 1876-6102, https://doi.org/10.1016/j.egypro.2017.03.1276.

S. Hjelmaas, E. Storheim, N. Enaasen Flø, E. S. Thorjussen, A. Kolstad Morken, L. Faramarzi, T. de Cazenove, E. S. Hamborg, Results from MEA Amine Plant Corrosion Processes at the CO2 Technology Centre Mongstad, *Energy Procedia*, Volume 114, 2017, Pages 1166-1178, ISSN 1876-6102, https://doi.org/10.1016/j.egypro.2017.03.1280.

N. Brigman, M. I. Shah, O. Falk-Pedersen, T. Cents, V. Smith, T. De Cazenove, A. K. Morken, O. A. Hvidsten, M. Chhaganlal, J. K. Feste, G. Lombardo, O. M. Bade, J. Knudsen, S. C. Subramoney, B. F. Fostås, G. de Koeijer, E. S. Hamborg, Results of Amine Plant Operations from 30 wt% and 40 wt% Aqueous MEA Testing at the CO2 Technology Centre Mongstad, *Energy Procedia*, Volume 63, 2014, Pages 6012-6022, ISSN 1876-6102, https://doi.org/10.1016/j.egypro.2014.11.635.

D. Dux, B. Schallert, Study of Degradation Products at Different MEA Based Capture Pilot Plants, *Energy Procedia*, Volume 86, 2016, Pages 262-271, ISSN 1876-6102, https://doi.org/10.1016/j.egypro.2016.01.027.

P. Moser, G. Wiechers, S. Schmidt, J. Garcia Moretz-Sohn Monteiro, C. Charalambous, S. Garcia, E. Sanchez Fernandez, Results of the 18-month test with MEA at the post-combustion capture pilot plant at Niederaussem – new impetus to solvent management, emissions and dynamic behaviour, International Journal of Greenhouse Gas Control, Volume 95, (2020), 102945, ISSN 1750-5836, https://doi.org/10.1016/j.ijggc.2019.102945.

S. Khambaty, S. Reddy, Fluor's Econamine FG PlusSM process to Coal-based Power Plant, Fluor, (2003).

A. K. Morken, S. Pedersen, S. O. Nesse, N. E. Flø, K. Johnsen, J. K. Feste, T. de Cazenove, L. Faramarzi, K. Vernstad, CO2 capture with monoethanolamine: Solvent management and environmental impacts during long term operation at the Technology Centre Mongstad (TCM), *International Journal of Greenhouse Gas Control*, Volume 82, 2019, Pages 175-183, ISSN 1750-5836, https://doi.org/10.1016/j.ijggc.2018.12.018.

CO2 removal by amine absorption and condensed rotational separation: energy consumption & equipment sizing de Rijke, S. J. M. (Author). 31 Dec 2011.

S. Reddy, J. Yonkoski, H. Rode, R. Irons, W. Albrecht, Fluor's Econamine FG PlusSM Completes Test Program at Uniper's Wilhelmshaven Coal Power Plant, *Energy Procedia*, Volume 114, 2017, Pages 5816-5825, ISSN 1876-6102, https://doi.org/10.1016/j.egypro.2017.03.1719.

N. Brown, G. A. Staab, T. R. Silverman, G. W. Heller, R. Kupfer, C. Panaccione, A. Brown, ProTreat® Simulation Accurately Represents Experimental Results for Post-combustion Carbon Dioxide Capture with Novel Mixed Amine Solvent in Real Process Environment, *Energy Procedia*, Volume 114, 2017, Pages 1380-1387, ISSN 1876-6102, https://doi.org/10.1016/j.egypro.2017.03.1259.

L. Øi, K. A. Sætre, E. Hamborg. Comparison of simulation tools to fit and predict performance data of CO2 absorption into monoethanol amine at CO2 Technology Centre Mongstad (TCM). (2018). 230-235. 10.3384/ecp18153230.

X. Luo, J.N. Knudsen, D. de Montigny, T. Sanpasertparnich, R. Idem, D. Gelowitz, R. Notz, S. Hoch, H. Hasse, E. Lemaire, P. Alix, F.A. Tobiesen, O. Juliussen, M. Köpcke, H.F. Svendsen, Comparison and validation of simulation codes against sixteen sets of data from four different pilot plants, *Energy Procedia*, Volume 1, Issue 1, 2009, Pages 1249-1256, ISSN 1876-6102, https://doi.org/10.1016/j.egypro.2009.01.164.

R. H. Weiland, J. C. Dingman, Column Design Using Mass Transfer Rate Simulation, 2001, Optimized Gas Treating Inc.

N. A. Hatcher, Mass Transfer Rate Modeling Basics, 2014, Optimized Gas Treating Inc.

N. E. Flø, L. Faramarzi, F. Iversen, E. R. Kleppe, B. Graver, H. N. Bryntesen, K. Johnsen, Assessment of material selection for the CO2 absorption process with aqueous MEA solution based on results from corrosion monitoring at Technology Centre Mongstad, *International Journal of Greenhouse Gas Control*, Volume 84, 2019, Pages 91-110, ISSN 1750-5836, https://doi.org/10.1016/j.ijggc.2019.02.004.

Philip Loldrup Fosbøl, Randi Neerup, Susana Almeida, Amirali Rezazadeh, Jozsef Gaspar, Anette Beate Nesse Knarvik, Nina Enaasen Flø, Results of the fourth Technology Centre Mongstad campaign: LVC testing, *International Journal of Greenhouse Gas Control*, Volume 89, 2019, Pages 52-64, ISSN 1750-5836, https://doi.org/10.1016/j.ijggc.2019.06.025.

Gjernes, Erik and Pedersen, Steinar and Jain, Divya and Åsen, Knut Ingvar and Hvidsten, Odd Arne and De Koeijer, Gelein and Faramarzi, Leila and de Cazenove, Thomas, Documenting Modes of Operation with Cost Saving Potential at the Technology Centre Mongstad. 14th Greenhouse Gas Control Technologies Conference Melbourne 21-26 October 2018 (GHGT-14) , Available at SSRN: https://ssrn.com/abstract=3366235.

Johnsen, Kim and Romslo Kleppe, Eirik and Faramarzi, Leila and Benquet, Christophe and Gjernes, Erik and De Koeijer, Gelein and de Cazenove, Thomas and Kolstad Morken, Anne and Enaasen Flø, Nina and Ismail Shah, Muhammad and Aronsson, Magnus and Ullestad, Øyvind, CO2 Product Quality: Assessment of the Range and Level of Impurities in the CO2 product Stream from MEA Testing at Technology Centre Mongstad (TCM). 14th Greenhouse Gas Control Technologies Conference Melbourne 21-26 October 2018 (GHGT-14) , Available at SSRN: https://ssrn.com/abstract=3365995.

Kvamsdal, Hanne Marie and Hauger, Svein Olav and Gjertsen, Fredrik and Mejdell, Thor and Enaasen Flø, Nina and Johnsen, Kim and Hillestad, Magne, Demontration of Two-Level Non-Linear Model Predictive Control of Co2 Capture Plants. 14th Greenhouse Gas Control Technologies Conference Melbourne 21-26 October 2018 (GHGT-14) , Available at SSRN: https://ssrn.com/abstract=3366015.

Lombardo, Gerard and Shah, Muhammad Ismail and Fostås, Berit and Hvidsten, Odd Arne and Faramarzi, Leila and de Cazenove, Thomas and Lepaumier, Hélène and Rogiers, Pieter, Results from Testing of a Brownian Diffusion Filter for Reducing the Aerosol Concentration in a Residue Fluidized Catalytic Cracker Flue Gas at the Technology Center Mongstad. 14th Greenhouse Gas Control Technologies Conference Melbourne 21-26 October 2018 (GHGT-14) , Available at SSRN: https://ssrn.com/abstract=3366032.

Shah, Muhammad Ismail and Lombardo, Gerard and Fostås, Berit and Benquet, Christophe and Kolstad Morken, Anne and de Cazenove, Thomas, CO2 Capture from RFCC Flue Gas with 30w% MEA at Technology Centre Mongstad, Process Optimization and Performance Comparison. 14th Greenhouse Gas Control Technologies Conference Melbourne 21-26 October 2018 (GHGT-14) , Available at SSRN: https://ssrn.com/abstract=3366149 or http://dx.doi.org/10.2139/ssrn.3366149.

Sundal, Anja and Weber, Ulrich and Brennwald, Matthias and Ringrose, Philip and Flø, Nina and Johnsen, Kim and Faramarzi, Leila and Aagaard, Per and Kipfer, Rolf, Monitoring Real Time, In-Line Variations of Noble Gas Concentrations During CO2 Capture Operations by Means of a Portable Mass Spectrometer. 14th Greenhouse Gas Control Technologies Conference Melbourne 21-26 October 2018 (GHGT-14) , Available at SSRN: https://ssrn.com/abstract=3366166.

Gerard Lombardo, Berit F. Fostås, Muhammad Ismail Shah, Anne Kolstad Morken, Odd Arne Hvidsten, Jan Mertens, Espen Steinseth Hamborg, Results from Aerosol Measurement in Amine Plant Treating Gas Turbine and Residue Fluidized Catalytic Cracker Flue Gases at the CO2 Technology Centre Mongstad, *Energy Procedia*, Volume 114, 2017, Pages 1210-1230, ISSN 1876-6102, https://doi.org/10.1016/j.egypro.2017.03.1377.

Mikoviny, Tomas & Nielsen, Claus & Tan, Wen & Wisthaler, Armin & Zhu, Liang & Morken, Anne & Nilsen, Terje. (2017). Ambient Measurements of Amines by PTR-QiTOF: Instrument Performance Assessment and Results from Field Measurements in the Vicinity of TCM, Mongstad. *Energy Procedia*. 114. 1017-1021. 10.1016/j.egypro.2017.03.1246.

Mocholí Montañés, Rubén & Flø, Nina & Dutta, Rohan & Nord, Lars & Bolland, Olav. (2017). Dynamic Process Model Development and Validation with Transient Plant Data Collected from an MEA Test Campaign at the CO 2 Technology Center Mongstad. *Energy Procedia*. 114. 1538-1550. 10.1016/j.egypro.2017.03.1284.

Hamborg, Espen & Smith, Vian & Cents, A. & Brigman, Natasha & Pedersen, Olav & Cazenove, Thomas & Chhaganlal, Milan & Feste, Jane & Ullestad, Øyvind & Ulvatn, Helge & Gorset, Oddvar & Askestad, Inga & Gram, Lars & Fostås, Berit & Shah, Muhammad & Maxson, Andrew & Thimsen, David. (2014). Results from MEA testing at the CO2 Technology Centre Mongstad. Part II: Verification of baseline results. *Energy Procedia*. 63. 5994-6011. 10.1016/j.egypro.2014.11.634.

Morken, Anne & Nenseter, Bjarne & Pedersen, Steinar & Chhaganlal, Milan & Feste, Jane & Tyborgnes, Rita & Ullestad, Øyvind & Ulvatn, Helge & Zhu, Liang & Mikoviny, Tomas & Wisthaler, Armin & Cents, A. & Bade, Otto & Knudsen, Jacob & de Koeijer, Gelein & Falk-Pedersen, Olav & Hamborg, Espen. (2014). Emission Results of Amine Plant Operations from MEA Testing at the CO2 Technology Centre Mongstad. *Energy Procedia*. 63. 6023-6038. 10.1016/j.egypro.2014.11.636.

Thimsen, David & Maxson, Andrew & Smith, Vian & Cents, A. & Falk-Pedersen, Olav & Gorset, Oddvar & Hamborg, Espen. (2014). Results from MEA testing at the CO2 Technology Centre Mongstad. Part I: Post-Combustion CO2 capture testing methodology. *Energy Procedia*. 63. 5938-5958. 10.1016/j.egypro.2014.11.630.

Cazenove, Thomas & Bouma, Richard H. B & Goetheer, Earl & Os, Peter & Hamborg, Espen. (2016). Aerosol Measurement Technique: Demonstration at CO2 Technology Centre Mongstad. *Energy Procedia*. 86. 160-170. 10.1016/j.egypro.2016.01.017.

Gelein de Koeijer, Yngvil Oftebro Enge, Cyril Thebault, Svein Berg, Julia Lindland, Sverre Johannesen Overå, European CO2 test centre mongstad–Testing, verification and demonstration of post-combustion technologies, *Energy Procedia*, Volume 1, Issue 1, 2009, Pages 1321-1326, ISSN 1876-6102, https://doi.org/10.1016/j.egypro.2009.01.173.

de Koeijer, Gelein & Enge, Yngvil & Sanden, Knut & Graff, Oscar & Falk-Pedersen, Olav & Amundsen, Tore & Overå, Sverre. (2011). CO2 Technology Centre Mongstad - Design, Functionality and Emissions of the Amine Plant. *Energy Procedia*. 4. 1207-1213. 10.1016/j.egypro.2011.01.175.

Andersson, Vibeke & Wittmeyer, Kristina & Gorset, Oddvar & Maree, Yolandi & Sanden, Knut. (2013). Operational Experience and Initial Results from the First Test Period at CO2 Technology Centre Mongstad. *Energy Procedia*. 37. 6348-6356. 10.1016/j.egypro.2013.06.564.

Erik Gjernes, Laila Iren Helgesen, Yolandi Maree, Health and environmental impact of amine based post combustion CO2 capture, *Energy Procedia*, Volume 37, 2013, Pages 735-742, ISSN 1876-6102, https://doi.org/10.1016/j.egypro.2013.05.162.

Yolandi Maree, Sissel Nepstad, Gelein de Koeijer, Establishment of Knowledge base for Emission Regulation for the CO2 Technology Centre Mongstad, *Energy Procedia*, Volume 37, 2013, Pages 6265-6272, ISSN 1876-6102, https://doi.org/10.1016/j.egypro.2013.06.555.

DOE/NETL Carbon Capture Program. Carbon Dioxide Capture Handbook. National Energy Technology Laboratory. 2015. https://www.netl.doe.gov/sites/default/files/netl-file/Carbon-Dioxide-Capture-Handbook-2015.pdf.

Minge, J. C., Brouillette, D. R., et. al. (2019, December). Meeting the Dual Challenge: A Roadmap to At-Scale Deployment of Carbon Capture, Use, and Storage (Rep.). Retrieved January, 2021, from National Petroleum Council website: https://dualchallenge.npc.org/.

Gaffney Cline. (2019, December). NPC CCUS Cost Assessment Calculator [Computer software]. Retrieved January, 2021, from https://www.gaffneycline.com/calculator/npc-ccus-cost-assessment-calculator.

Electric Reliability Council of Texas (ERCOT). (2020, December 16). Report on the Capacity, Demand and Reserves (CDR) in the ERCOT Region, 2021-2030 (Rep.). Retrieved December 20, 2020, from http://www.ercot.com/content/wcm/lists/197379/CapacityDemandandReservesReport_Dec2020.pdf.

North American Electric Reliability Corporation (NERC). (December 2019). 2019 Long-Term Reliability Assessment (Rep.). Retrieved December 20, 2020 from https://www.nerc.com/pa/RAPA/ra/Reliability%20Assessments%20DL/NERC_LTRA_2019.pdf.

2021 TECHNICAL REPORT

Front-End Engineering Design (FEED) Study for a Carbon Capture Plant Retrofit to a Natural Gas-Fired Gas Turbine Combined Cycle Power Plant: Appendices, Volume 1

WORK PERFORMED UNDER AGREEMENT
DE-FE0031848
December, 2021

Report Number: DOE-BECHTEL-FE0031848



Sponsoring Program Office: National Energy Technology Laboratory (NETL)
Name of Recipient: Bechtel National, Inc.
Principal Investigator: W. Elliott
Consortium/teaming members: The Electric Power Research Institute (EPRI) as a Sub-Awardee

Front-End Engineering Design (FEED) Study for a Carbon Capture Plant Retrofit to a Natural Gas-Fired Gas Turbine Combined Cycle Power Plant

APPENDICES: Volume 1

WORK PERFORMED UNDER AGREEMENT

DE-FE0031848

December 2021

Final Report, December 2021

DISCLAIMER OF WARRANTIES AND LIMITATION OF LIABILITIES

THIS REPORT WAS PREPARED AS AN ACCOUNT OF WORK SPONSORED BY AN AGENCY OF THE UNITED STATES GOVERNMENT. NEITHER THE UNITED STATES GOVERNMENT NOR ANY AGENCY THEREOF, NOR ANY OF THEIR EMPLOYEES, MAKES ANY WARRANTY, EXPRESS OR IMPLIED, OR ASSUMES ANY LEGAL LIABILITY OR RESPONSIBILITY FOR THE ACCURACY, COMPLETENESS, OR USEFULNESS OF ANY INFORMATION, APPARATUS, PRODUCT, OR PROCESS DISCLOSED, OR REPRESENTS THAT ITS USE WOULD NOT INFRINGE PRIVATELY OWNED RIGHTS. REFERENCE HEREIN TO ANY SPECIFIC COMMERCIAL PRODUCT, PROCESS, OR SERVICE BY TRADE NAME, TRADEMARK, MANUFACTURER, OR OTHERWISE DOES NOT NECESSARILY CONSTITUTE OR IMPLY ITS ENDORSEMENT, RECOMMENDATION, OR FAVORING BY THE UNITED STATES GOVERNMENT OR ANY AGENCY THEREOF. THE VIEWS AND OPINIONS OF AUTHORS EXPRESSED HEREIN DO NOT NECESSARILY STATE OR REFLECT THOSE OF THE UNITED STATES GOVERNMENT OR ANY AGENCY THEREOF.

Table of Contents

Appendix A: Piping and Instrument Diagram.....A-1

Appendix B: Cold Eye Review Discussion Record ...B-1
Review Dates.....B-1
Participants B-1
Abbreviations B-2
SESSION 1: September 17, 2020.....B-3
SESSION 2: September 21, 2020.....B-5
Comments Via Email B-9

Appendix C: ESD-PSD Cause and Effect Diagram....C-1

Appendix D: Relief, Depressurization and Process Draining Philosophy D-1

Appendix E: Plot Plan, GA, Piping Arrangement and Elevations E-1

Appendix F: Pipe Class Selection..... F-1

Appendix A: Piping and Instrument Diagram

26301-000-M6-AB-00001	Piping & Instrument Diagram LP Steam System
26301-000-M6-AB-00002	Piping & Instrument Diagram LP Steam System
26301-000-M6-AB-00003	Piping & Instrument Diagram MP Steam System
26301-000-M6-AB-00004	Piping & Instrument Diagram LP Steam Supply to CC
26301-000-M6-AB-00005	Piping & Instrument Diagram MP Steam Supply to CC
26301-000-M6-BA-00001	Piping & Instrument Diagram Flue Gas System
26301-000-M6-BA-00002	Piping & Instrument Diagram Flue Gas System
26301-000-M6-BA-00003	Piping & Instrument Diagram Flue Gas System
26301-000-M6-CN-00010	Piping & Instrument Diagram CO2 Absorber T-101 (Amine Section)
26301-000-M6-CN-00020	Piping & Instrument Diagram CO2 Absorber T-101 (Wash Water Cooling Section)
26301-000-M6-CN-00030	Piping & Instrument Diagram Absorber 1 Wash Water Cooling System
26301-000-M6-CN-00040	Piping & Instrument Diagram Absorber 1 Rich Amine Pumps
26301-000-M6-CN-00080	Piping & Instrument Diagram Lean Amine Cooling System
26301-000-M6-CN-00081	Piping & Instrument Diagram Lean Amine/Rich Amine Heat Exchangers
26301-000-M6-CN-00085	Piping & Instrument Diagram Semi-Lean Amine/Rich Amine Heat Exchanger
26301-000-M6-CN-00100	Piping & Instrument Diagram Flash Feed Heaters
26301-000-M6-CN-00110	Piping & Instrument Diagram Semi-Lean Amine Flash System
26301-000-M6-CN-00120	Piping & Instrument Diagram Amine Stripper (Packed Section)
26301-000-M6-CN-00130	Piping & Instrument Diagram Amine Stripper (Trayed Section)
26301-000-M6-CN-00140	Piping & Instrument Diagram Amine Stripper (Reflux Section)
26301-000-M6-CN-00150	Piping & Instrument Diagram Stripper Reboilers
26301-000-M6-CN-00170	Piping & Instrument Diagram Lean Amine Pump
26301-000-M6-CY-00010	Piping & Instrument Diagram Rich and Lean Amine Storage
26301-000-M6J-YA-00001	Piping & Instrument Diagram Symbols and Legends
26301-000-M6J-YA-00002	Piping & Instrument Diagram Symbols and Legends
26301-000-M6J-YA-00003	Piping & Instrument Diagram Symbols and Legends
26301-000-M6J-YA-00004	Piping & Instrument Diagram Symbols and Legends
26301-000-M6J-YA-00005	Piping & Instrument Diagram Symbols and Legends
26301-000-M6-PA-00001	Piping & Instrument Diagram Compressed Air System
26301-000-M6-PA-00002	Piping & Instrument Diagram Compressed Air System
26301-000-M6-PF-00001	Piping & Instrument Diagram Fire Protection System
26301-000-M6-PG-00001	Piping & Instrument Diagram Nitrogen Gas System
26301-000-M6-PW-00001	Piping & Instrument Diagram Potable Water System
26301-000-M6-QG-00010	Piping & Instrument Diagram CO2 Compressor Suction Drum

26301-000-M6-QG-00020	Piping & Instrument Diagram CO2 Compressor 1st Stage
26301-000-M6-QG-00030	Piping & Instrument Diagram CO2 Compressor 1st Stage Steam Generator & Intercooler
26301-000-M6-QG-00040	Piping & Instrument Diagram CO2 Compressor 1st Stage Interstage Knock-Out Drum
26301-000-M6-QG-00050	Piping & Instrument Diagram CO2 Compressor 2nd Stage
26301-000-M6-QG-00060	Piping & Instrument Diagram CO2 Compressor 2nd Stage Steam Generator & Intercooler
26301-000-M6-QG-00070	Piping & Instrument Diagram CO2 Compressor 2nd Stage Interstage Knock-Out Drum
26301-000-M6-QG-00080	Piping & Instrument Diagram CO2 Drying Package
26301-000-M6-QG-00090	Piping & Instrument Diagram CO2 Compressor 3rd Stage Interstage
26301-000-M6-QG-00100	Piping & Instrument Diagram CO2 Compressor 3rd Stage Steam Generator & Intercooler
26301-000-M6-QG-00110	Piping & Instrument Diagram CO2 Surge Drum & Product Send Out Pump
25474-000-M6-QG-00120	Piping & Instrument Diagram CO2 Cooler and Export Pipeline
26301-000-M6-SC-00001	Piping & Instrument Diagram LP Condensate System
26301-000-M6-WL-00002	Piping & Instrument Diagram Cooling Water Supply System
26301-000-M6-WL-00003	Piping & Instrument Diagram Cooling Water Return System
26301-000-M6-WP-00010	Piping & Instrument Diagram Absorber Makeup Water Pumps
26301-000-M6-XW-00001	Piping & Instrument Diagram Amine Waste System
26301-000-M6-XW-00002	Piping & Instrument Diagram Waste Water System
26301-000-M6-XW-00003	Piping & Instrument Diagram Waste Spray Water System

Acknowledgment: This material is based upon work supported by the Department of Energy Award Number DE-FE0031848

Disclaimer: This report was prepared as an account of work sponsored by an agency of the United States Government. Neither the United States Government nor any agency thereof, nor any of their employees, makes any warranty, express or implied, or assumes any legal liability or responsibility for the accuracy, completeness, or usefulness of any information, apparatus, product, or process disclosed, or represents that its use would not infringe privately owned rights. Reference herein to any specific commercial product, process, or service by trade name, trademark, manufacturer, or otherwise does not necessarily constitute or imply its endorsement, recommendation, or favoring by the United States Government or any agency thereof. The views and opinions of authors expressed herein do not necessarily state or reflect those of the United States Government or any agency thereof.

NOTES:

1. FOR SYMBOLS AND LEGENDS SEE DRAWINGS M6J-YA-00001 THROUGH M6J-YA-00005.
2. ALL LINES, VALVES, EQUIPMENT, AND INSTRUMENT NUMBERS ARE PREFIXED WITH "AB", UNLESS NOTED OTHERWISE.
3. ALL VENTS DRAINS AND INSTRUMENTATION ROOT VALVES ARE 1" UNLESS NOTED OTHERWISE.
4. * SYMBOL INDICATES EQUIPMENT SUPPLIED BY VENDOR.
5. ALL INSTRUMENT SEQUENCE NUMBERS ARE PREFIXED WITH "0" UNLESS NOTED OTHERWISE.
6. FOR FULL DETAILS OF SHUTDOWN LOGIC (PSD) REFER TO 26301-000-J4-JD-00001.
7. CONTROL VALVE SIZE TO BE CONFIRMED DURING DETAILED ENGINEERING.

RICH AMINE FLOW RATE M6-CN-00040 (K-1)
FROM STRIPPER LEVEL M6-CN-00120 (M-1)
LP STEAM FLOW TO REBOILER ME-110E/F M6-AB-00002 (C-5)
LP STEAM FLOW TO REBOILER ME-110G/H M6-AB-00002 (B-5)
BFW M6-SC-00001 (C-2)
LP CONDENSATE TEMPERATURE M6-SC-00001 (B-1)
ENTHALPY CONTROL
LP STEAM
OSBL ISBL
1-SC-L061-C1E-2.5"
1-AB-L001-C1E-36"
1-AB-L002-C1E-24"
1-AB-L003-C1E-24"
1-AB-L004-C1E-18"
1-AB-L005-C1E-2"
1-AB-L006-C1E-1"
1-AB-L007-C1E-18"
1-AB-L008-C1E-2"
1-AB-L009-C1E-2.5"
1-AB-L010-C1E-2.5"
1-AB-L011-C1E-18"
1-AB-L012-C1E-10"
1-AB-L013-C1E-1.5"
1-AB-L014-C1E-1.5"
1-AB-L015-C1E-18"
1-AB-L016-C1E-10"
1-AB-L017-C1E-1.5"
1-AB-L018-C1E-1.5"
1-AB-L039-C1E-14"
1-AB-L040-C1E-14"
1-AB-L041-C1E-14"
1-AB-L042-C1E-14"
1-AB-L043-C1E-10"
1-AB-L044-C1E-1.5"
1-AB-L045-C1E-1.5"
1-AB-L053-C1E-2"
STRIPPER AREA (UTILITY STATION NO. 3)
LP STEAM M6-AB-00002 (C-6)
LP STEAM TO REBOILER ME-110A M6-CN-00150 (J-12)
LP STEAM TO REBOILER ME-110B M6-CN-00150 (J-12)
LP STEAM TO REBOILER ME-110C M6-CN-00150 (F-12)
LP STEAM TO REBOILER ME-110D M6-CN-00150 (E-12)
STEAM/COND. BALANCE LINE 1-SC-L017-C1E-4" M6-SC-00001
STEAM/COND. BALANCE LINE 1-SC-L018-C1E-4" M6-SC-00001
TO LP COND. DISTRIBUTION M6-AB-00002 (D-6)
TO LP COND. DISTRIBUTION M6-AB-00002 (A-3)
TO LP COND. DISTRIBUTION M6-AB-00002 (A-3)
TO LP COND. DISTRIBUTION M6-AB-00002 (A-3)
TO LP COND. DISTRIBUTION M6-AB-00002 (A-3)
PSD NOTE 6
SLOPE
36x24
24x18

NO.	DATE	REVISIONS	BY	CHK	APPR
000	07/24/20	ISSUED FOR INFORMATION	MDP	MJC	MJC/ADB

Owner: U. S. DEPARTMENT OF ENERGY, OFFICE OF FOSSIL ENERGY, NATIONAL ENERGY TECHNOLOGY LABORATORY

FEED STUDY FOR CARBON CAPTURE PLANT RETROFIT

PIPING & INSTRUMENT DIAGRAM
LP STEAM SYSTEM

Contractor: BECHTEL NATIONAL, INC.

Sheet Size 594 X 841 "A1" Scale N.T.S

JOB NO.	DRAWING NO.	REV.
26301	000-M6-AB-00001	000

Acknowledgment: This material is based upon work supported by the Department of Energy Award Number DE-FE0031648.
Disclaimer: This report was prepared as an account of work sponsored by an agency of the United States Government. Neither the United States Government nor any agency thereof, nor any of their employees, makes any warranty, express or implied, or assumes any legal liability or responsibility for the accuracy, completeness, or usefulness of any information, apparatus, product, or process disclosed, or represents that its use would not infringe privately owned rights. Reference herein to any specific commercial product, process, or service by trade name, trademark, manufacturer, or otherwise does not necessarily constitute or imply its endorsement, recommendation, or favoring by the United States Government or any agency thereof. The views and opinions of authors expressed herein do not necessarily state or reflect those of the United States Government or any agency thereof.

NOTES:

1. FOR SYMBOLS AND LEGENDS SEE DRAWINGS M6J-YA-00001 THROUGH M6J-YA-00005.
2. ALL LINES, VALVES, EQUIPMENT, AND INSTRUMENT NUMBERS ARE PREFIXED WITH "AB", UNLESS NOTED OTHERWISE.
3. ALL VENTS DRAINS AND INSTRUMENTATION ROOT VALVES ARE 1" UNLESS NOTED OTHERWISE.
4. * SYMBOL INDICATES EQUIPMENT SUPPLIED BY VENDOR.
5. ALL INSTRUMENT SEQUENCE NUMBERS ARE PREFIXED WITH "0" UNLESS NOTED OTHERWISE.
6. CONTROL VALVE SIZE TO BE CONFIRMED DURING DETAILED ENGINEERING.

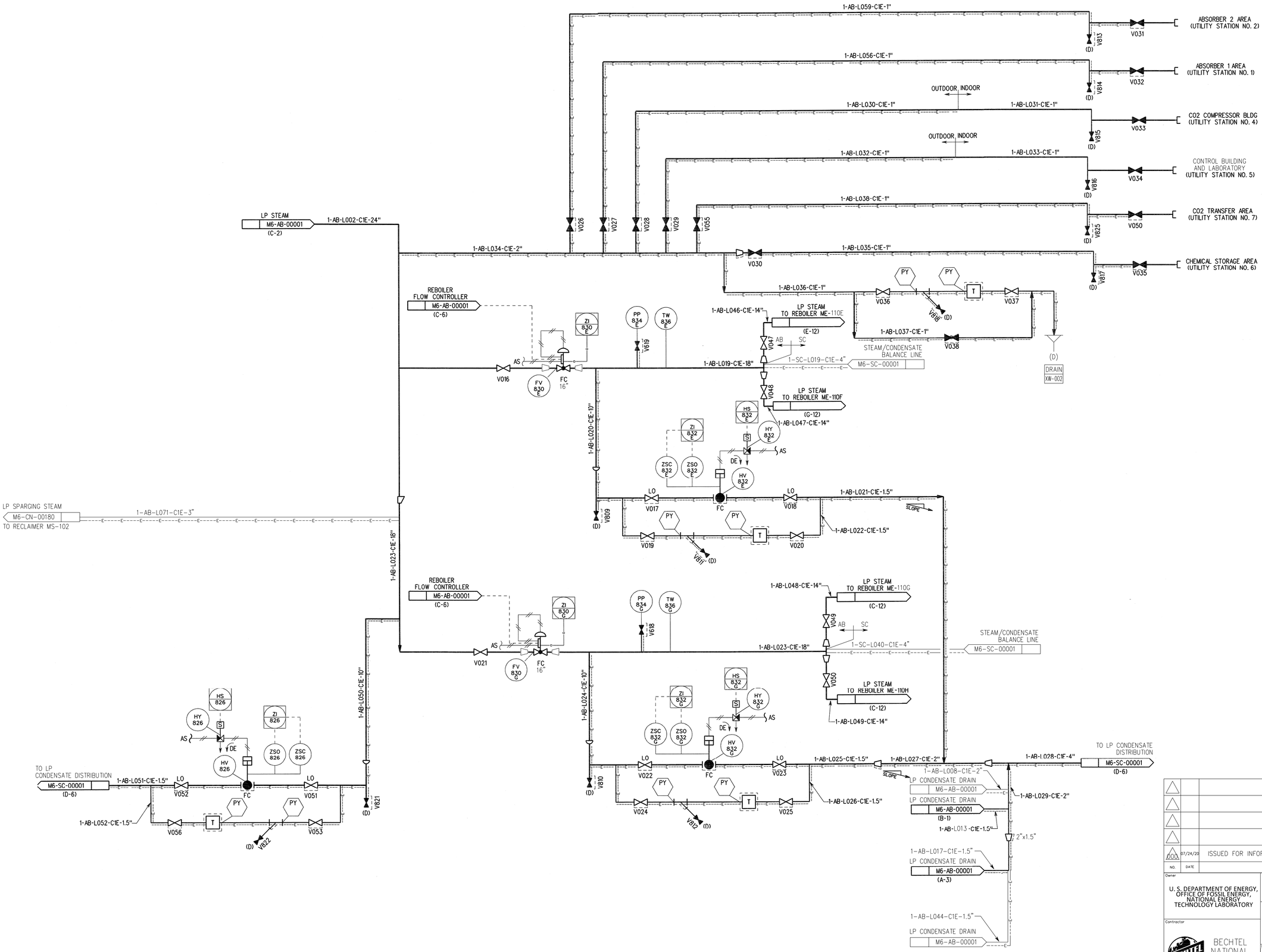

NO.	DATE	REVISIONS	BY	CHK	APPR			
000	07/24/20	ISSUED FOR INFORMATION	MDP	MJC	MJC/ADB			

Owner
U. S. DEPARTMENT OF ENERGY, OFFICE OF FOSSIL ENERGY, NATIONAL ENERGY TECHNOLOGY LABORATORY

Contractor
BECHTEL NATIONAL, INC.

FEED STUDY FOR CARBON CAPTURE PLANT RETROFIT

PIPING & INSTRUMENT DIAGRAM
LP STEAM SYSTEM

Sheet Size	Scale
594 x 841 "A1"	N.T.S

JOB NO.	DRAWING NO.	REV.
26301	000-M6-AB-00002	000

Acknowledgment: This material is based upon work supported by the Department of Energy Award Number DE-FE0031848
Disclaimer: This report was prepared as an account of work sponsored by an agency of the United States Government. Neither the United States Government nor any agency thereof, nor any of their employees, makes any warranty, express or implied, or assumes any legal liability or responsibility for the accuracy, completeness, or usefulness of any information, apparatus, product, or process disclosed, or represents that its use would not infringe privately owned rights. Reference herein to any specific commercial product, process, or service by trade name, trademark, manufacturer, or otherwise does not necessarily constitute or imply its endorsement, recommendation, or favoring by the United States Government or any agency thereof. The views and opinions of authors expressed herein do not necessarily state or reflect those of the United States Government or any agency thereof.

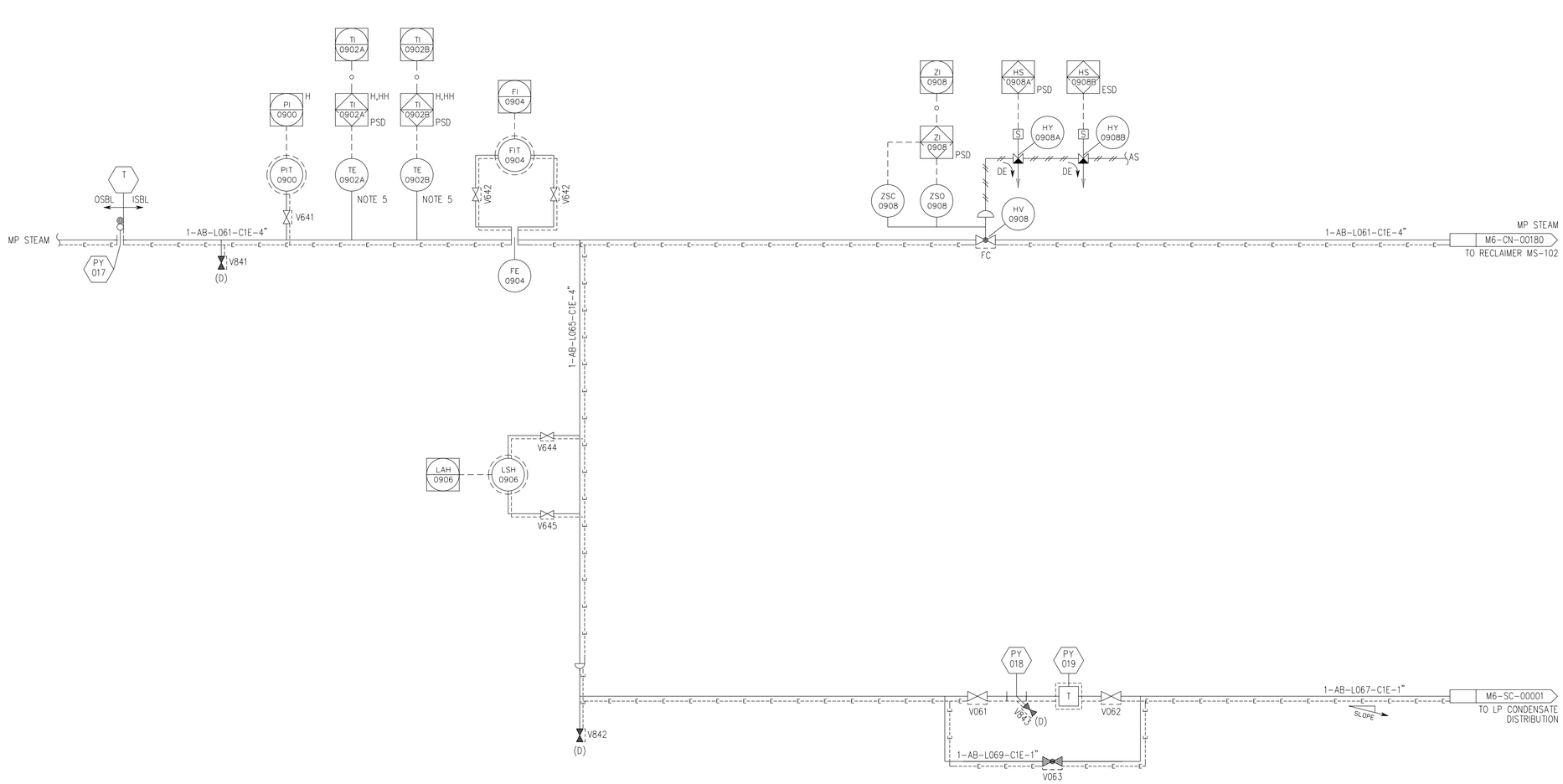

NOTES:

1. FOR SYMBOLS AND LEGENDS SEE DRAWINGS M6J-YA-00001 THROUGH M6J-YA-00005.
2. ALL LINES, VALVES, EQUIPMENT AND INSTRUMENT NUMBERS ARE PREFIXED WITH "AB" UNLESS OTHERWISE NOTED.
3. ALL VENTS, DRAINS AND INSTRUMENTATION ROOT VALVES ARE 1" UNLESS NOTED OTHERWISE.
4. CONTROL VALVE SIZES TO BE CONFIRMED DURING DETAILED ENGINEERING.
5. FOR FULL DETAILS OF SHUTDOWN LOGIC (PSD) REFER TO 26301-000-J4-JD-00001.

HOLDS:

NO.	DATE	REVISIONS	BY	CHK	APPR
000	07/24/20	ISSUED FOR INFORMATION	MDP	MJC	MJC/ADB

Owner
U. S. DEPARTMENT OF ENERGY, OFFICE OF FOSSIL ENERGY, NATIONAL ENERGY TECHNOLOGY LABORATORY

Contractor
BECHTEL NATIONAL, INC.

FEED STUDY FOR CARBON CAPTURE PLANT RETROFIT

PIPING & INSTRUMENT DIAGRAM MP STEAM SYSTEM

Sheet Size 594 X 841 "A1" | Scale N.T.S

JOB NO.	DRAWING NO.	REV.
26301	000-M6-AB-00003	000

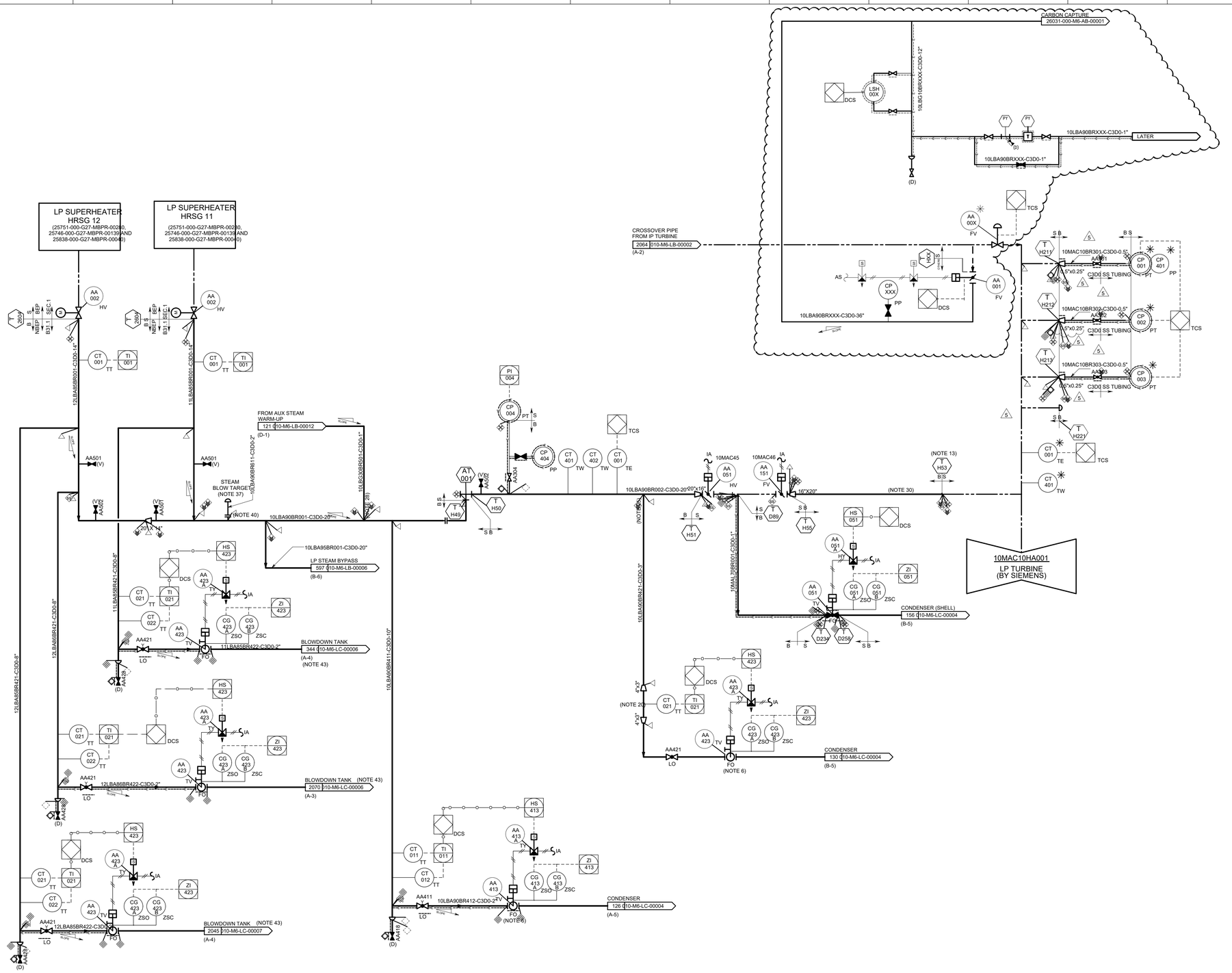

NOTE:
THIS P&ID IS FROM EXISTING POWERPLANT P&ID 25756-010-M6-LB-00003. . THIS STUDY ONLY PROVIDES THE INTERFACE OF THE CARBON CAPTURE TO THE POWER PLANT AS SHOWN IN THE CLOUDED SECTION.

NO.	DATE	REVISIONS	BY	CHK	APPR
0	11/02/20	ISSUED FOR INFORMATION	KML	VS	VS

Owner
U. S. DEPARTMENT OF ENERGY, OFFICE OF FOSSIL ENERGY, NATIONAL ENERGY TECHNOLOGY LABORATORY

FEED STUDY FOR CARBON CAPTURE PLANT RETROFIT

PIPING AND INSTRUMENTATION DIAGRAM
MAIN STEAM SYSTEM (LP STEAM)

Contractor
BECHTEL NATIONAL, INC.

Sheet Size 594 X 841 "A1" Scale AS SHOWN

JOB NO.	DRAWING NO.	REV.
26301	000-M6-AB-00004	0

Acknowledgment: This material is based upon work supported by the Department of Energy Award Number DE-FE0031848.

Disclaimer: This report was prepared as an account of work sponsored by an agency of the United States Government. Neither the United States Government nor any agency thereof, nor any of their employees, makes any warranty, express or implied, or assumes any legal liability or responsibility for the accuracy, completeness, or usefulness of any information, apparatus, product, or process disclosed, or represents that its use would not infringe privately owned rights. Reference herein to any specific commercial product, process, or service by trade name, trademark, manufacturer, or otherwise does not necessarily constitute or imply its endorsement, recommendation, or favoring by the United States Government or any agency thereof. The views and opinions of authors expressed herein do not necessarily state or reflect those of the United States Government or any agency thereof.

Acknowledgment: This material is based upon work supported by the Department of Energy Award Number DE-FE0031848
Disclaimer: This report was prepared as an account of work sponsored by an agency of the United States Government. Neither the United States Government nor any agency thereof, nor any of their employees, makes any warranty, express or implied, or assumes any legal liability or responsibility for the accuracy, completeness, or usefulness of any information, apparatus, product, or process disclosed, or represents that its use would not infringe privately owned rights. Reference herein to any specific commercial product, process, or service by trade name, trademark, manufacturer, or otherwise does not necessarily constitute or imply its endorsement, recommendation, or favoring by the United States Government or any agency thereof. The views and opinions of authors expressed herein do not necessarily state or reflect those of the United States Government or any agency thereof.

NOTE:
1. THIS P&ID IS FROM EXISTING POWERPLANT P&ID 25756-010-M6-LB-00012. . THIS STUDY ONLY PROVIDES THE INTERFACE OF THE CARBON CAPTURE TO THE POWER PLANT AS SHOWN IN THE CLOUDED SECTION.
2. TIE IN SHALL BE INSTALLED SO THAT CONDENSATION FROM HEADER IS UNABLE TO DRAIN INTO NEW TIE IN PIPE.

NO.	DATE	REVISIONS	BY	CHK	APPR
0	11/02/20	ISSUED FOR INFORMATION	KML	VS	VS

Owner: U. S. DEPARTMENT OF ENERGY, OFFICE OF FOSSIL ENERGY, NATIONAL ENERGY TECHNOLOGY LABORATORY

Contractor: BECHTEL NATIONAL, INC.

FEED STUDY FOR CARBON CAPTURE PLANT RETROFIT

PIPING AND INSTRUMENTATION DIAGRAM
AUXILIARY STEAM SYSTEM & DISTRIBUTION

Sheet Size	Scale	
594 X 841 "A1"	AS SHOWN	
JOB NO.	DRAWING NO.	REV.
26301	000-M6-AB-00005	0

Acknowledgment: This material is based upon work supported by the Department of Energy Award Number DE-FE0031648
Disclaimer: This report was prepared as an account of work sponsored by the United States Government. Neither the United States Government nor any agency thereof, nor any of their employees, makes any warranty, express or implied, or assumes any legal liability or responsibility for the accuracy, completeness, or usefulness of any information, apparatus, product, or process disclosed, or represents that its use would not infringe privately owned rights. Reference herein to any specific commercial product, process, or service by trade name, trademark, manufacturer, or otherwise does not necessarily constitute or imply its endorsement, recommendation, or favoring by the United States Government or any agency thereof. The views and opinions of authors expressed herein do not necessarily state or reflect those of the United States Government or any agency thereof.

MA-101
FLUE GAS BLOWER (ABSORBER 1)
50% CAPACITY

MA-102
FLUE GAS BLOWER (ABSORBER 2)
50% CAPACITY

M6-CN-00010
TO LEAN AMINE
FLOW CONTROL (T-101)

M6-BA-00002
TO TV-0094

M6-BA-00002
FROM FV-0093

TIC 0014 H

TE 0014

CO2 ABSORBER 1
M6-CN-00010

BECHTEL VENDOR

SPRAY WATER
M6-BA-00002
FROM TV-0094
1-BA-L006-S6E-1.5"

MS-101B

FI 0032

FI 0032B

FI 0032A

FIT 0032B

FIT 0032

FE 0032

ZT 0034A

ZSC 0034A

ZI 0034A

ZSO 0034A

HS 0034A

M

V813 V814 V815 V816

20'4"x10'2" (SS)

1-BA-MD-034

ZI 0035

ZT 0035

HS 0035 ESD

PY 0035

PV 0035

(NOTE 11)

SI 0036

VFD

ZSO 0036

ZSC 0036

ST 0036

PY 001A

PY 002A

PV 0036

FAI

MA-101

14'4"x14'4" (SS)

INLET BOX

M

SEE DETAIL A

DCS

(D)

KEY PHASOR

HS 0036

VE 0042 X

VE 0044 Y

TE 0046

TE 0048

VE 0050 VEL

VE 0052 X

VE 0054 Y

SE 0056

VY 0042 NDE

VY 0044

TI 0046 DE

TI 0048 NDE

VY 0050 VEL

VY 0052

VY 0054 DE

SY 0056

VIBRATION PANEL
(NOTE 5)

V612

LSH 0038

LAH 0038

HS 0038

ZI 0038

V611

1-BA-L012-S1D-8"

HY 0038

ZSO 0038

ZSC 0038

HV 0038

AS

FO

V024 V820 V025

1-BA-L013-S1D-3"

V813 (D)

V026

1-BA-L015-S1D-3"

(D)
DRAIN
XW-002

M6-BA-00002
TO TV-0098

M6-BA-00002
FROM FI-0097

PIC 0006

20'4"x10'2" (SS)

M6-BA-00002
TO TV-0096

M6-BA-00002
FROM FV-0095

TIC 0086 H

TE 0086

CO2 ABSORBER 2

SPRAY WATER
M6-BA-00002
FROM TV-0096
1-BA-L004-S6E-1.5"

MS-101C

TIC 0012

T ISBL OSBL CCPP

TE 0012B (NOTE 7)

TE 0012A (NOTE 9)

MS-101A

1-BA-L001-S6E-4"

SPRAY WATER
M6-BA-00002
FROM TV-0098

BECHTEL VENDOR

SS

CS

1-BA-L020-S1E-3"

(D)
DRAIN
XW-003

FI 0058

FI 0058A

FI 0058B

FI 0058C

FIT 0058C

FIT 0058B

FIT 0058A

TI 0004

PI 0006A H

PI 0006B H

TE 0004

PIT 0006A

PIT 0006B

PY 003

V601 V602

V633 V634 V635 V636 V637 V638

20'4"x20'4" (CS)

FE 0058

SAMPLE PROBE CONTROL BOX

HEATED SAMPLE UMBILICAL

GAS ANALYZER BUILDING

NH3,NOX,H2O,CO2

AIT 0020

EACH ANALYZER

AI

PLC

CO2 AIT 0022

O2 AIT 0026

AI CO2 0024

TO LEAN AMINE
FLOW CONTROL T-101
M6-CN-00010

TO LEAN AMINE
FLOW CONTROL T-102

ZT 0060A

ZSC 0060A

ZI 0060A

ZSO 0060A

HS 0060A

M

20'4"x10'2" (SS)

1-BA-MD-060

ZI 0061

ZT 0061

HS 0061 ESD

PY 0061

PV 0061

(NOTE 11)

SI 0062

VFD

ZSO 0062

ZSC 0062

ST 0062

PY 001B

PY 002B

PV 0062

FAI

MA-102

14'4"x14'4" (SS)

INLET BOX

M

SEE DETAIL B

DCS

(D)

KEY PHASOR

HS 0062

VE 0070 X

VE 0072 Y

TE 0074

TE 0076

VE 0078 VEL

VE 0080 X

VE 0082 Y

SE 0084

VY 0070 NDE

VY 0072

TI 0074 DE

TI 0076 NDE

VY 0078 VEL

VY 0080

VY 0082 DE

SY 0084

VIBRATION PANEL
(NOTE 5)

V609

LSH 0064

LAH 0064

HS 0064

ZI 0064

V610

1-BA-L011-S1D-8"

HY 0064

ZSO 0064

ZSC 0064

HV 0064

AS

FO

V019 V821 V020

1-BA-L014-S1D-3"

V812 (D)

V021

1-BA-L016-S1D-3"

(D)
DRAIN
XW-002

MS-101A
FLUE GAS WATER FOGGER SYSTEM

MS-101B/C
FLUE GAS WATER FOGGER SYSTEM

NOTES:

1. FOR SYMBOLS AND LEGENDS SEE DRAWINGS M6J-YA-00001 THROUGH M6J-YA-00005.
2. ALL LINES, VALVES, EQUIPMENT, AND INSTRUMENT NUMBERS ARE PREFIXED WITH "BA", UNLESS NOTED OTHERWISE.
3. ALL VENTS DRAINS AND INSTRUMENTATION ROOT VALVES ARE 1" UNLESS NOTED OTHERWISE.
4. ✳ SYMBOL INDICATES EQUIPMENT SUPPLIED BY VENDOR.
5. SINGLE VIBRATION MONITORING PANEL.
6. CONTROL VALVE SIZE TO BE CONFIRMED DURING DETAILED ENGINEERING.
7. MAXIMUM STRAIGHT LENGTH DISTANCE SHALL BE PROVIDED TO 1ST ELBOW DOWNSTREAM OF MS-101A.
8. MS-101A TO BE LOCATED CLOSE TO THE COOLING WATER BLOWDOWN TANK WITHIN OSBL.
9. SPACE TO BE PROVIDED FOR FUTURE DEMISTER TO BE INSTALLED DOWNSTREAM OF MS-101A.
10. DUCT SIZE TO BE CONFIRMED IN DETAILED ENGINEERING.
11. DETAILS OF BLOWER CAPACITY BALANCING AND CONTROL LOGIC TO BE CONFIRMED DURING DETAILED ENGINEERING

VIBRATION PANEL
DCS
(NOTE 5)
VY 0043 Y
VY 0045 X
VY 0047 X
VY 0049 Y
VE 0043 Y
VE 0045 X
VE 0047 X
VE 0049 Y
M
DETAIL A
DE
NDE
TE 0051
TE 0053
TE 0055 (A-F)
RTD BEARING
RTD
RTD WINDING
XA 0036
MOTOR PROTECTION RELAY

HOLDS:

VIBRATION PANEL
DCS
(NOTE 5)
VY 0071 Y
VY 0073 X
VY 0075 X
VY 0077 Y
VE 0071 Y
VE 0073 X
VE 0075 X
VE 0077 Y
M
DETAIL B
DE
NDE
TE 0079
TE 0081
TE 0083 (A-F)
RTD BEARING
RTD
RTD WINDING
XA 0062
MOTOR PROTECTION RELAY

NO.	DATE	REVISIONS	BY	CHK	APPR
000	08/07/20	ISSUED FOR INFORMATION	MDP	MJC	MJC/ADB

Owner
U. S. DEPARTMENT OF ENERGY, OFFICE OF FOSSIL ENERGY, NATIONAL ENERGY TECHNOLOGY LABORATORY

Contractor
BECHTEL NATIONAL, INC.

FEED STUDY FOR CARBON CAPTURE PLANT RETROFIT

PIPING & INSTRUMENT DIAGRAM
FLUE GAS SYSTEM

Sheet Size 594 X 841 "A1" | Scale N.T.S

JOB NO.	DRAWING NO.	REV.
26301	000-M6-BA-00001	000

Acknowledgment: This material is based upon work supported by the Department of Energy Award Number DE-FE0031648
Disclaimer: This report was prepared as an account of work sponsored by the United States Government. Neither the United States Government nor any agency thereof, nor any of their employees, makes any warranty, express or implied, or assumes any legal liability or responsibility for the accuracy, completeness, or usefulness of any information, apparatus, product, or process disclosed, or represents that its use would not infringe privately owned rights. Reference herein to any specific commercial product, process, or service by trade name, trademark, manufacturer, or otherwise does not necessarily constitute or imply its endorsement, recommendation, or favoring by the United States Government or any agency thereof. The views and opinions of authors expressed herein do not necessarily state or reflect those of the United States Government or any agency thereof.

MP-109A/B
FLUE GAS TRIM FOGGERS WATER SUPPLY PUMP
2x 100%

MP-209A/B
FLUE GAS PRIMARY FOGGER WATER SUPPLY PUMP
2x 100%

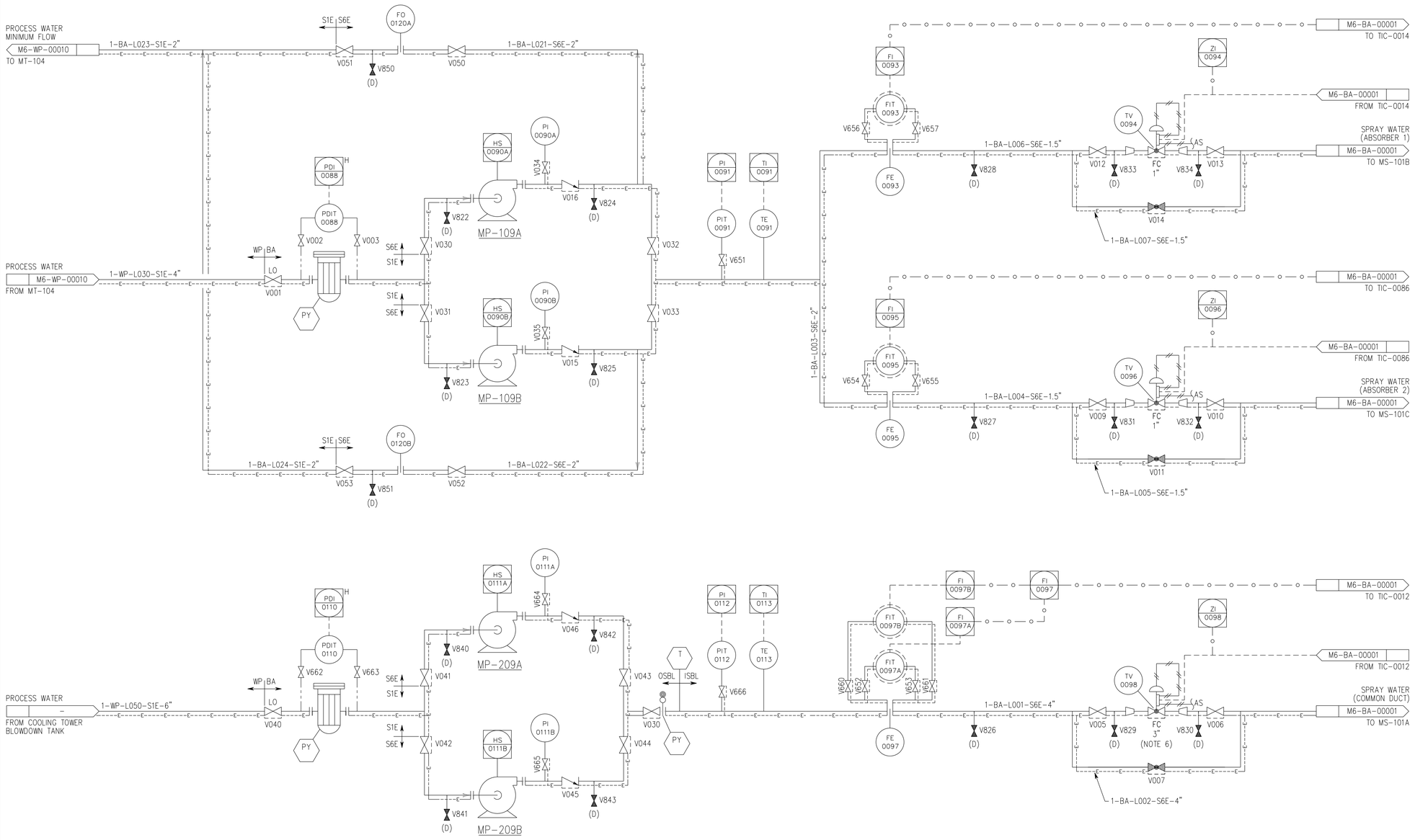

NOTES:

1. FOR SYMBOLS AND LEGENDS SEE DRAWINGS M6J-YA-00001 THROUGH M6J-YA-00005.
2. ALL LINES, VALVES, EQUIPMENT AND INSTRUMENT NUMBERS ARE PREFIXED WITH "BA" UNLESS OTHERWISE NOTED.
3. ALL VENTS, DRAINS AND INSTRUMENTATION ROOT VALVES ARE 1" UNLESS NOTED OTHERWISE.
4. ✳ SYMBOL INDICATES EQUIPMENT SUPPLIED BY VENDOR.
5. CONTROL VALVE SIZE TO BE CONFIRMED DURING DETAILED ENGINEERING.
6. TV-0098 TO BE FITTED WITH A MINIMUM STOP BASED ON THE MINIMUM FLOW REQUIREMENTS OF MP-209A/B. DETAILS TO BE DEVELOPED DURING DETAILED ENGINEERING.

HOLDS:

NO.	DATE	REVISIONS	BY	CHK	APPR
000	08/07/20	ISSUED FOR INFORMATION	MDP	MJC	MJC/ ADB

Owner
U. S. DEPARTMENT OF ENERGY, OFFICE OF FOSSIL ENERGY, NATIONAL ENERGY TECHNOLOGY LABORATORY

Contractor
BECHTEL NATIONAL, INC.

FEED STUDY FOR CARBON CAPTURE PLANT RETROFIT

PIPING & INSTRUMENT DIAGRAM
FLUE GAS SYSTEM

Sheet Size	Scale
594 X 841 "A1"	N.T.S

JOB NO.	DRAWING NO.	REV.
26301	000-M6-BA-00002	000

Acknowledgment: This material is based upon work supported by the Department of Energy Award Number DE-FE0031848.
Disclaimer: This report was prepared as an account of work sponsored by an agency of the United States Government. Neither the United States Government nor any agency thereof, nor any of their employees, makes any warranty, express or implied, or assumes any legal liability or responsibility for the accuracy, completeness, or usefulness of any information, apparatus, product, or process disclosed, or represents that its use would not infringe privately owned rights. Reference herein to any specific commercial product, process, or service by trade name, trademark, manufacturer, or otherwise, does not necessarily state or reflect those of the United States Government or any agency thereof. The views and opinions of authors expressed herein do not necessarily state or reflect those of the United States Government or any agency thereof.

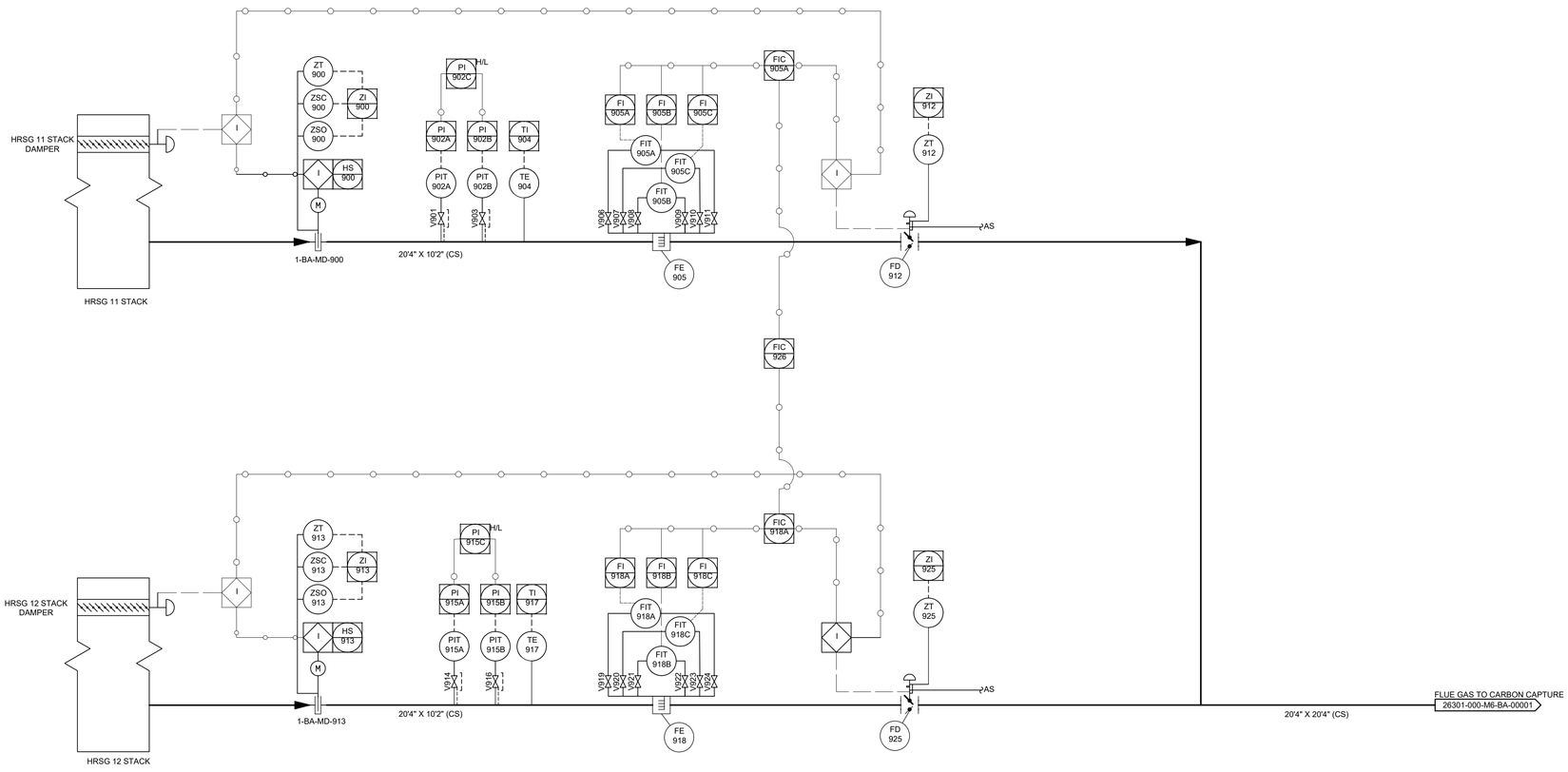

NOTES:
1. FOR SYMBOLS AND LEGENDS SEE DRAWINGS M6J-YA-00001 THROUGH M6J-YA-00005.
2. ALL LINES, VALVES, EQUIPMENT AND INSTRUMENT NUMBERS ARE PREFIXED WITH "BA" UNLESS NOTED OTHERWISE.

NO.	DATE	REVISIONS	BY	CHK	APPR
0	11/19/20	ISSUED FOR USE	KML	VS	VS

Owner
U. S. DEPARTMENT OF ENERGY, OFFICE OF FOSSIL ENERGY, NATIONAL ENERGY TECHNOLOGY LABORATORY

Contractor
BECHTEL NATIONAL, INC.

FEED STUDY FOR CARBON CAPTURE PLANT RETROFIT

PIPING AND INSTRUMENTATION DIAGRAM FLUE GAS SYSTEM

Sheet Size 594 X 841 "A1" | Scale AS SHOWN

JOB NO.	DRAWING NO.	REV.
26301	000-M6-BA-00003	0

Acknowledgment: This material is based upon work supported by the Department of Energy Award Number DE-FE0031648
Disclaimer: This report was prepared as an account of work sponsored by an agency of the United States Government. Neither the United States Government nor any agency thereof, nor any of their employees, makes any warranty, express or implied, or assumes any legal liability or responsibility for the accuracy, completeness, or usefulness of any information, apparatus, product, or process disclosed, or represents that its use would not infringe privately owned rights. Reference herein to any specific commercial product, process, or service by trade name, trademark, manufacturer, or otherwise does not necessarily constitute or imply its endorsement, recommendation, or favoring by the United States Government or any agency thereof. The views and opinions of authors expressed herein do not necessarily state or reflect those of the United States Government or any agency thereof.

T-101

CO2 ABSORBER 1
(WASH WATER COOLING SECTION)

OFF GAS
VENT TO ATMOS
120"

CO2 WET VENT HEADER
–
TO T-102
1-CN-L781-S1E-24"

CO2 VENT
M6-CN-00140
FROM MV-202
1-QG-L647-S1E-24"
NO POCKETS

RELIEF VAPOUR
M6-CN-00140
FROM MV-202 PSV
1-CN-L233-S1E-6"
NO POCKETS

RELIEF VAPOUR
M6-CN-00130
FROM T-103 PSV
1-CN-L753-S1E-8"
NO POCKETS

RELIEF VAPOUR
M6-CN-00180
FROM MS-102 PSV
1-CN-L344-S1E-8"
NO POCKETS

CONTROL SIGNAL TO
M6-WL-00003
ME-101 CW CONTROL VALVE

1-CN-L780-S1E-24"
NO POCKETS
SLOPE
V250
LO
(NOTE 8)
QG
CN
TE 0114A
TI 0114B
TE 0114B
TI 0114A
TIC 0114
FE 0116
FIT 0116
FI 0116
V230
LO
SAMPLE PROBE
CONTROL BOX
HEATED SAMPLE UMBILICAL
CN
JN
CN
QG
1-QG-L666-S1E-24"
CO2
M6-QG-00010
FROM DRY VENT HEADER
CONTROL SIGNAL
M6-CN-00010
TO CO2 MASTER

T-101

2" V605A
2" V605B
PDIT 0112
PDI 0112
H

GAS ANALYZER BUILDING
1-JN AIT 0118 CO2, NOX, NH3, H20, AMINES
1-JN AIT 0120 O2
1-JN AIT 0122 CO2
PLC
1-JN AI EACH ANALYSIS
1-JN AI 0122 CO2
CONTROL SIGNAL
M6-CN-00010
TO CO2 MASTER

PROCESS WATER
M6-WP-00010
FROM MP-119A/B
1-WP-L008-S1E-3"
WP
CN
WASH WATER RETURN
M6-CN-00030
FROM ME-101
1-CN-L107-S1E-16"
20"x16"
30"
MW
20"

V606A
2"
PDIT 0108
PDI 0108
H
2" V606B

(V) V804C
(V) V804D
CONTROL SIGNAL
M6-CN-00030
TO LV-0160
LIC 0110A
H,L
LIT 0110A
LI 0110B
LIT 0110B
V604A 2"
V604B 2"
(NOTE 4)
V604C 2"
V804B (D)
V604D 2"
30"
MW

HOT WASH WATER
M6-CN-00030
TO PUMP MP-102A/B
1-CN-L106-S1E-24"
24"x20"
1-CN-L104-S1E-20"
20"
V804A
(D)
30"
MW
20"
1-CN-L105-S1E-20"

FOR CONTINUATION
SEE M6-CN-00010

NOTES:

1. FOR SYMBOLS AND LEGENDS SEE DRAWINGS M6J-YA-00001 THROUGH M6J-YA-00005.
2. ALL LINES, VALVES, EQUIPMENT, AND INSTRUMENT NUMBERS ARE PREFIXED WITH "CN", UNLESS NOTED OTHERWISE.
3. ALL VENTS, DRAINS AND INSTRUMENTATION ROOT VALVES ARE 1", UNLESS NOTED OTHERWISE.
4. HEAT TRACE WASH WATER CHIMNEY SECTION BETWEEN LEVEL CONNECTIONS TAPS.
5. ON CONTINUED HIGH CO2 READING OPERATOR TO INVESTIGATE EMISSIONS INTO THE VENT HEADERS.
6. ALL DRAINS IN AMINE SERVICE SHALL BE ROUTED TO OPEN TUNDISH CONNECTED TO AMINE SUMP SYSTEM. DRAINIING TO SUMP SHALL ONLY OCCUR ONCE SYSTEM IS DEPRESSURED.
7. FACILITY CONSISTS OF TWO ABSORPTION TRAINS – DESIGN OF BOTH TRAINS IS TO BE IDENTICAL, WITH THE 2ND TRAIN DRAWINGS TO BE DEVELOPED DURING DETAILED ENGINEERING.
8. SYMMETRICAL PIPING TO T-101/T-102.

NO.	DATE	REVISIONS	BY	CHK	APPR
000	07/31/20	ISSUED FOR INFORMATION	MDP	MJC	MJC/ADB

Owner
U. S. DEPARTMENT OF ENERGY, OFFICE OF FOSSIL ENERGY, NATIONAL ENERGY TECHNOLOGY LABORATORY

Contractor
BECHTEL NATIONAL, INC.

FEED STUDY FOR CARBON CAPTURE PLANT RETROFIT

PIPING & INSTRUMENT DIAGRAM
CO2 ABSORBER T-101
(WASH WATER COOLING SECTION)

Sheet Size	Scale	
594 x 841 "A1"	N.T.S	
JOB NO.	DRAWING NO.	REV.
26301	000-M6-CN-00020	000

MT-101
RICH AMINE STORAGE TANK

MT-102
LEAN AMINE SOLVENT STORAGE TANK

N2 FROM DISTRIBUTION
M6-PG-00001

RETURN AMINE
M6-XW-00001
FROM AMINE SUMP

RICH AMINE
M6-CN-00040
FROM MF-105A/B

WASTE AMINE
M6-XW-00001
TO HV-2110

N2 FROM DISTRIBUTION
M6-PG-00001

PROCESS WATER
M6-WP-00010
FROM MT-104

DEMINERALISED WATER

FRESH AMINE
FROM TRUCK
FILL CONNECTION

EXCESS AMINE
M6-CN-00080
FROM ME-102

1-XW-L012-C1E-6"
1-CN-L473-S1E-8"
NNF
1-PG-L012-C1E-2"
1-CY-L804-S1E-4"
1-PG-L014-C1E-2"
1-CY-L788-S1E-4"
1-WP-L025-S1E-4"
1-WP-L007-S1E-2"
1-CY-L751-S1E-6"
1-CN-L687-S1E-8"
1-CY-L763-S1E-4"
1-CY-L760-S1E-4"
1-CY-L766-S1E-6"
1-CY-L757-S1E-3"
1-CY-L754-S1E-3"
1-CY-L769-S1E-3"
1-CY-L767-S1E-3"
1-CY-L756-S1E-6"
1-CY-L770-S1E-4"
1-CY-L761-S1E-6"
1-CY-L758-S1E-3"
1-CY-L762-S1E-4"
1-CY-L755-C1E-3"
1-CY-L792-S1E-1"
1-CY-L781-S1E-2"
1-CY-L793-S1E-1"
1-CY-L794-S1E-1"
1-CY-L782-S1E-2"
1-CY-L795-S1E-1"
1-CY-L800-S1E-4"
1-CY-L801-S1E-4"
1-CY-L805-S1E-4"
1-CY-L789-S1E-4"

PIC 2612 L
PIT 2612
PV 2612A
PV 2612B
PIC 2616 L
PV 2616A
PV 2616B
PSV 0902
PSV 0901
PI 1410
PIT 1410
PI 1420
PIT 1420
PIT 2616
LI 1414
LIT 1414
LI 1424
LIT 1424
TI 1411
TE 1411
TSL 1411
TI 1421
TE 1421
TSL 1421
AP 1412
AP 1422
GRAB
HY 1370
ZI 1370
HS 1370
ZSO 1370
ZSC 1370
HV 1370
PP 1426A
PP 1428A
HS 1430A
PI 1432A
FIT 1434A
PP 1426B
PP 1428B
HS 1430B
PI 1432B
FIT 1434B
FV 1434A
FV 1434B
FIC 1434A
FIC 1434B
FIT 1450
FV 1450
FIC 1450
FE 1434A
FE 1434B
FE 1450
LIC 1440
LV 1440
ZI 1440

V720 V710 V040 V050 V801 V802 V015 V013 V603 V617 V825 V060 V061 V606 V607 V018 V031 V815 V022 V023 V024 V025 V026 V027A V027B V010A V010B V011A V011B V012A V012B V809 V810 V816 V817 V600 V601 V602 V062 V826 V063 V029A V029B V811 V803 V804 V805 V806 V807 V004A V004B V005A V005B V006A V006B V614 V613 V612 V609 V610 V611 V615A V615B V616A V616B V618 V045 V019 V030 V007 V008 V009 V818 V819 V605 V608 V032 V033 V034 V812 V813

(V) (D) (S) (AS) (NOTE 5) (NOTE 8)
FC 1" FO 1" FO 2" FO 3"
WP CY CN DE V
PY T OSBL ISBL NNF

MP-111A
MP-111B
MP-111A/B
LEAN AMINE SOLVENT FILL PUMP

(D) DRAIN XW-001

VENT TO SAFE LOCATION

SIGNAL CONTROL
–
FROM T-102 LEVEL

SIGNAL CONTROL
M6-CN-00010
FROM T-101 LEVEL

LEAN AMINE FILL
M6-CN-00080
TO ME-102

RICH AMINE
M6-XW-00001
TO MP-101/124 SUCTION

GRAB

NOTES:

1. FOR SYMBOLS AND LEGENDS SEE DRAWINGS M6J-YA-00001 THROUGH M6J-YA-00005.
2. ALL LINES, VALVES, EQUIPMENT, AND INSTRUMENT NUMBERS ARE PREFIXED WITH "CY", UNLESS NOTED OTHERWISE.
3. ALL VENTS, DRAINS AND INSTRUMENTATION ROOT VALVES ARE 1", UNLESS NOTED OTHERWISE.
4. EQUIPMENT TO BE HEAT TRACED.
5. START UP STRAINER TO BE REMOVED SUBSEQUENT TO PLANT COMMISSIONING. TO BE REPLACED BY A COARSE STRAINER FOR NORMAL OPERATIONS.
6. CONTROL VALVE AND PSV SIZES TO BE CONFIRMED DURING DETAILED ENGINEERING.
7. GOVERNING CASE FOR PSV AND PSV INLET/OUTLET LINE SIZES TO BE CONFIRMED DURING DETAILED ENGINEERING
8. REMOVABLE ACTIVATED CARBON FILTER CARTRIDGE LOCATED AT GRADE.
9. OVERFLOW WITH FOOT VALVE.

NO.	DATE	REVISIONS	BY	CHK	APPR
000	28/07/20	ISSUED FOR INFORMATION	MDP	MJC	MJC/ ADB

Owner
U. S. DEPARTMENT OF ENERGY, OFFICE OF FOSSIL ENERGY, NATIONAL ENERGY TECHNOLOGY LABORATORY

Contractor
BECHTEL NATIONAL, INC.

FEED STUDY FOR CARBON CAPTURE PLANT RETROFIT

PIPING & INSTRUMENT DIAGRAM
RICH & LEAN AMINE STORAGE

Sheet Size 594 X 841 "A1" | Scale N.T.S

JOB NO.	DRAWING NO.	REV.
26301	000-M6-CY-00010	000

Acknowledgment: This material is based upon work supported by the Department of Energy Award Number DE-FE0031848
Disclaimer: This report was prepared as an account of work sponsored by an agency of the United States Government. Neither the United States Government nor any agency thereof, nor any of their employees, makes any warranty, express or implied, or assumes any legal liability or responsibility for the accuracy, completeness, or usefulness of any information, apparatus, product, or process disclosed, or represents that its use would not infringe privately owned rights. Reference herein to any specific commercial product, process, or service by trade name, trademark, manufacturer, or otherwise does not necessarily constitute or imply its endorsement, recommendation, or favoring by the United States Government or any agency thereof. The views and opinions of authors expressed herein do not necessarily state or reflect those of the United States Government or any agency thereof.

DRIVERS AND TURBINES

- SINGLE FLOW STEAM TURBINE
- DOUBLE FLOW STEAM TURBINE
- GAS TURBINE
- ELECTRIC MOTOR (SEPARATE FROM DRIVER UNIT)
- AIR MOTOR (SEPARATE FROM DRIVER UNIT)
- ELECTRIC GENERATOR
- DIESEL ENGINE

PUMPS

- HAND PUMP
- HORIZONTAL CENTRIFUGAL PUMP
- VERTICAL CANNED PUMP
- SUMP OR DRY PIT VERTICAL PUMP
- VERTICAL WET PIT PUMP
- SUBMERSIBLE VERTICAL PUMP
- AIR DIAPHRAGM PUMP

PUMPS (CONT.)

- POSITIVE DISPLACEMENT OR METERING PUMP
- ROTARY SCREW PUMP
- BOILER FEED PUMP (BARREL)
- BOOSTER FEED PUMP
- VACUUM PUMP
- GEAR PUMP
- VANE PUMP
- SCREW PUMP
- RECIPROCATING PUMP
- PROPORTIONING METERING PUMP

COMPRESSORS

- CENTRIFUGAL COMPRESSOR
- RECIPROCATING COMPRESSOR
- ROTARY COMPRESSOR

COMPRESSORS (CON'T)

- ROTARY SCREW AIR COMPRESSOR
- SCREW COMPRESSOR
- VAPOR COMPRESSOR
- LIQUID SEAL

MIXING COMPONENTS

- IMPELLER
- PADDLE
- PROPELLER
- MOTOR DRIVEN MIXER PROPELLER TYPE
- MOTOR DRIVEN MIXER TURBINE TYPE
- AGITATOR
- GENERIC BLENDER
- EJECTOR OR EDUCTOR MIXER

MATERIAL HANDLING

- COOLER OR CALCINER
- AIR INTAKE FILTER
- BELT SCALE
- CYCLONE
- DUST COLLECTOR
- OSCILLATING SCREEN
- VIBRATING SCREEN
- HOIST
- CAR PULLER
- LOADING ARM
- HOPPER

MATERIAL HANDLING (CONT.)

- 2-WAY DIVERTER GATE VALVE (PIPING)
- 3-WAY DIVERTER GATE VALVE (PIPING)
- MANUAL DAMPER (PIPING)
- MOTORIZED DAMPER (INSTRUMENTATION)
- MANUAL SLIDE GATE VALVE (HANDWHEEL, HAND, RACK AND PINION)
- PNEUMATIC WITH CYLINDER OPERATOR SLIDE GATE VALVE

CONVEYORS & FEEDERS

- SCREW CONVEYOR
- BELT CONVEYOR
- MOTOR DRIVEN RACK
- BUCKET ELEVATOR
- VIBRATING CONVEYOR
- ROLLER CONVEYOR
- DRAG CONVEYOR
- SCREW FEEDER
- BELT FEEDER
- VIBRATING FEEDER
- STAR FEEDER OR ROTARY AIRLOCK

LIQUID SEPARATION EQUIPMENT

- THICKENER
- WASTE WATER SEPARATOR
- CARTRIDGE OR BAG FILTER
- PLATE FILTER
- PACKED FILTER
- SKIMMER
- FROTH FLOATION CELL

STORAGE TANKS

- PRESSURE VESSELS VERTICAL (SHOWN) OR HORIZONTAL (TANKS, RECEIVERS, DRYERS, SEPARATORS, ETC.)
- PRESSURIZED GAS BOTTLE
- HORIZONTAL DRUM
- SPHERE
- 2-STAGE VERTICAL DRUM/DRYER
- TANK WITH INTERNAL BLADDER
- FIXED ROOF TANK
- SUMP

STORAGE TANKS (CONT.)

- OPEN TOP TANK
- DIAPHRAGM ATMOSPHERIC STORAGE
- DOME ROOF TANK (MANHOLE)
- INTERNAL FLOATING ROOF TANK
- FLAT ROOF TANK
- SILO

Acknowledgment: This material is based upon work supported by the Department of Energy Award Number DE-FE0031648
Disclaimer: This report was prepared as an account of work sponsored by the United States Government. Neither the United States Government nor any agency thereof, nor any of their employees, makes any warranty, express or implied, or assumes any legal liability or responsibility for the accuracy, completeness, or usefulness of any information, apparatus, product, or process disclosed, or represents that its use would not infringe privately owned rights. Reference herein to any specific commercial product, process, or service by trade name, trademark, manufacturer, or otherwise does not necessarily constitute or imply its endorsement, recommendation, or favoring by the United States Government or any agency thereof. The views and opinions of authors expressed herein do not necessarily state or reflect those of the United States Government or any agency thereof.

NO.	DATE	REVISIONS	BY	CHK	APPR
000	07/17/20	ISSUED FOR INFORMATION	MDP	MJC	MJC/ ADB

Owner: U. S. DEPARTMENT OF ENERGY, OFFICE OF FOSSIL ENERGY, NATIONAL ENERGY TECHNOLOGY LABORATORY

Contractor: BECHTEL NATIONAL, INC.

FEED STUDY FOR CARBON CAPTURE PLANT RETROFIT

PIPING & INSTRUMENT DIAGRAM SYMBOLS AND LEGENDS

Sheet Size: 594 x 841 "A1" | Scale: N.T.S

JOB NO.	DRAWING NO.	REV.
26301	000-M6J-YA-00001	000

HEAT EXCHANGERS

U-TUBE HEAT EXCHANGER

STRAIGHT TUBE HEAT EXCHANGER

PLATE TYPE HEAT EXCHANGER

KETTLE REBOILER

ELECTRIC BOILER

SAMPLE COOLER

AFTERCOOLER

EVAPORATOR/
CRYSTALIZER

HEAT EXCHANGERS (CONT.)

HORIZONTAL DEAERATOR AND STORAGE TANK

VERTICAL DEAERATOR AND STORAGE TANK

CONDENSER

JET CONDENSER

BAROMETRIC CONDENSER

DOUBLE PIPE EXCHANGER

FINNED TUBE EXCHANGER

HEAT EXCHANGERS (CONT.)

SPRAY COOLER EXCHANGER

OIL COOLER

GENERIC

INDUCED DRAFT COOLER WITH STRAIGHT COIL

FORCED DRAFT
AIR COOLER

INDUCED DRAFT
AIR COOLER

BOILER

MECHANICAL DRAFT
COOLING TOWER

HEATING & COOLING ELEMENTS

HEATER

NATURAL DRAFT

ELEVATED BURNER STACK

SELF SUPPORTING FLARE

GROUND FLARE

HEATING & COOLING ELEMENTS

ELECTRIC JACKET

JACKET

FULL COIL

HALF COIL

INTERNAL COIL

BAYONET

ELECTRIC BAYONET

AIR COOLED CONDENSER

AIR PREHEATER

VESSEL INTERNALS DISTILLATION COLUMNS AND TRAYS

DISTILLATION COLUMN

DISTILLATION COLUMN

CALIBRATION
COLUMN

REACTOR WITH INLET DISTRIBUTOR
AND BASKET OUTLET

20
19
16
17
2
1

REACTOR WITH INLET
DISTRIBUTOR AND
BASKET OUTLET

SIDE SEAL PAN

CENTER SEAL PAN

DRAW OFF PAN

DRAW OFF PAN

SHED

VESSEL INTERNALS DISTILLATION COLUMNS AND TRAYS (CONT.)

VANE TYPE INLET
DISTRIBUTOR

INLET
DISTRIBUTOR

VESSEL DEMISTER
PAD

DEMISTER PAD

GENERIC (UNDEFINED
TRAY TYPE)

1-PASS GENERIC

2-PASS GENERIC

2-PASS GENERIC
W/CENTER DNCM

4-PASS GENERIC

4-PASS GENERIC
W/CENTER DNCM

CASCADE DEFLECTOR

GENERIC BBL CAP TRAY

2 PASS GENERIC
BBL CAP TRAY
W/SIDE DNCM

2 PASS GENERIC
BBL CAP TRAY
W/CENTER DNCM

4 PASS GENERIC
BBL CAP TRAY
W/SIDE DNCM

4 PASS GENERIC
BBL CAP TRAY
W/CENTER DNCM

SIEVE TRAY

1 PASS SIEVE TRAY

CHIMNEY TRAY

CHIMNEY TRAY W/DRAW

PACKED BED

TRANSPORTATION EQUIPMENT

SHIP

BARGE

GONDOLA RAILCAR

BOX RAILCAR

FLAT RAILCAR

TANK RAILCAR (FRONT)

TANK RAILCAR (SIDE)

DUMP TRUCK

BOX TRUCK

TANK TRUCK

NO.	DATE	REVISIONS	BY	CHK	APPR
000	07/17/20	ISSUED FOR INFORMATION	MDP	MJC	MJC/ADB

Owner
U. S. DEPARTMENT OF ENERGY,
OFFICE OF FOSSIL ENERGY,
NATIONAL ENERGY
TECHNOLOGY LABORATORY

Contractor
BECHTEL NATIONAL, INC.

FEED STUDY FOR CARBON CAPTURE PLANT RETROFIT

PIPING & INSTRUMENT DIAGRAM SYMBOLS AND LEGENDS

Sheet Size 594 x 841 "A1" Scale N.T.S

JOB NO.	DRAWING NO.	REV.
26301	000-M6J-YA-00002	000

Acknowledgment: This material is based upon work supported by the Department of Energy Award Number DE-FE0031848

Disclaimer: This report was prepared as an account of work sponsored by an agency of the United States Government. Neither the United States Government nor any agency thereof, nor any of their employees, makes any warranty, express or implied, or assumes any legal liability or responsibility for the accuracy, completeness, or usefulness of any information, apparatus, product, or process disclosed, or represents that its use would not infringe privately owned rights. Reference herein to any specific commercial product, process, or service by trade name, trademark, manufacturer, or otherwise does not necessarily constitute or imply its endorsement, recommendation, or favoring by the United States Government or any agency thereof. The views and opinions of authors expressed herein do not necessarily state or reflect those of the United States Government or any agency thereof.

PROCESS FLOW

- MAIN PROCESS FLOW
- SECONDARY PROCESS FLOW
- MAIN PROCESS FLOW (BURIED PIPE)
- SECONDARY PROCESS FLOW (BURIED PIPE)
- PIPING BY CONTRACTOR OTHER THAN BECHTEL
- HEAT TRACING E = ELECTRIC (SHOWN) S = STEAM
- EQUIPMENT SKID OR BUILDING OUTLINE

P&ID CONNECTORS

- PIPING CONNECTOR BY VENDOR
- PIPING CONNECTORS
- UTILITY CONNECTOR
- OPEN DRAIN CONNECTOR
- OFF PAGE UTILITY CONNECTOR
- T 101 — TIE-IN MARKER OR TERMINAL POINT DESIGNATOR

REDUCER/INCREASERS

- CONCENTRIC DIAMETER CHANGE
- ECCENTRIC DIAMETER CHANGE

CAPS

- WELDED CAP
- SCREWED CAP
- BREATHER CAP

CONNECTIONS

- BLIND FLANGE
- DU — FLANGES INSULATING FLANGES (IF) DIELECTRIC UNION (DU) (SHOWN)
- CIRCULAR/HAMMER BLIND
- SPECTACLE BLIND (OPEN)
- SPECTACLE BLIND (CLOSED)
- FLEXIBLE CONNECTION
- FLEXIBLE HOSE CONNECTION
- HOSE CONNECTION
- RS — REMOVABLE SPOOL
- ORIFICE UNION

IN-LINE ITEMS

- EXPANSION JOINT
- IN-LINE MIXING TEE
- IN-LINE MIXER
- LOOP SEAL
- (V) OR — ATMOSPHERIC VENT
- V — AUTOMATIC VENT
- DRAIN (D)
- DRAIN (HARD-PIPED) (D)
- TRENCH
- MANUAL DRAIN (D)
- INLINE SILENCER
- VENT SILENCER

IN-LINE ITEMS (CONT.)

- SLOPE — DOWNWARD SLOPE
- SLOPE — UPWARD SLOPE
- FLAME ARRESTER
- WATER HAMMER ARRESTER
- EXHAUST HEAD
- TS — TEMPORARY STRAINER
- T-TYPE STRAINER
- SCREEN TYPE STRAINER
- AUTOMATIC SELF-CLEANING STRAINER
- REFRIGERANT STRAINER
- Y-TYPE STRAINER
- BASKET STRAINER
- DOUBLE BASKET STRAINER
- CONE TYPE STRAINER (STARTUP)
- T — TRAP

VALVE SYMBOLS

OPEN		CLOSED
	GATE VALVE	
	GLOBE VALVE	
	PLUG VALVE	
	BALL VALVE	
	BUTTERFLY VALVE	NC
L	THROTTLE ('L' USED WHEN LOCKED IN THROTTLING POSITION)	
	NEEDLE VALVE	
	DIAPHRAGM	
	PINCH VALVE	
	SLIDE GATE VALVE	NC

VALVE SYMBOLS (CONT.)

- Y — Y-PATTERN GLOBE (WHERE ONLY Y-PATTERN IS ACCEPTABLE)
- PACKLESS GLOBE VALVE
- (V) (D) — CLOSED DOUBLE-BODY VENT OR DRAIN VALVE
- INST. (OPEN) INST. (CLOSED) — DOUBLE-BODY INSTRUMENT VALVE
- ANGLE GLOBE VALVE-MANUAL
- WAFER/ROTARY VALVE
- 3-WAY BALL VALVE
- 3-WAY PLUG VALVE
- 4-WAY PLUG VALVE
- CHECK VALVE
- Y-STOP CHECK VALVE
- STOP CHECK VALVE
- ANGLE STOP CHECK
- WAFER CHECK
- TESTABLE CHECK VALVE
- COMBINED RECIRCULATION AND CHECK VALVE
- FOOT CHECK VALVE
- EXCESS FLOW CHECK VALVE
- BACKFLOW PREVENTER
- GAGE VALVE
- THREE WAY VALVE
- FOUR WAY VALVE
- EXTRACTION VALVE (NON-RETURN)
- P — EXTRACTION VALVE W/ PISTON (NON-RETURN)

BOUNDARIES

- AB AF — SYSTEM CHANGE
- C1D S1D — LINE SEQUENCE SPECIFICATION CHANGE
- VENDOR BECHTEL — BECHTEL/ VENDOR INTERFACE

FIRE AND SAFETY

- D — DELUGE VALVE
- P — PREACTION VALVE
- ALARM CHECK VALVE
- DRY PIPE VALVE
- BALL DRIP VALVE
- CHECK VALVE WITH AUTOMATIC DRAIN BALL DRIP VALVE
- POST INDICATOR VALVE
- HOSE VALVE
- SIAMESE CONNECTION
- FIRE HYDRANT
- FIRE HYDRANT WITH MONITOR
- FIRE HYDRANT WITH HOSE HOUSE
- FIRE HYDRANT WITH HOSE HOUSE AND MONITOR
- FIRE MONITOR
- FOAM MONITOR

FIRE & SAFETY (CONT.)

- HOSE REEL
- HOSE RACK
- SPRINKLERS OPEN HEAD
- SPRINKLERS CLOSED HEAD
- EYE WASH
- SHOWER/EYE WASH

MISCELLANEOUS LABELS

- RAINCAP
- PY — SPECIALTY ITEM CALLOUT
- PSV — PRESSURE SAFETY VALVE CALLOUT
- A — NOZZLE CALLOUT
- LC — LC = LOCKED CLOSED
- LO — LO = LOCKED OPEN
- FO — FO = FAIL OPEN (SHOWN) FC = FAIL CLOSED FI = FAIL INDETERMINATE FAI = FAIL AS IS
- G — ACTUATOR G = GEAR (SHOWN) A = AIR WRENCH CH = CHAIN X = EXTENSION STEM S = SPECIAL TYPE
- STEAM CONDITIONING VALVE (SHOWN WITH AIR OPERATOR)

PIPING AND DUCTWORK IDENTIFICATION

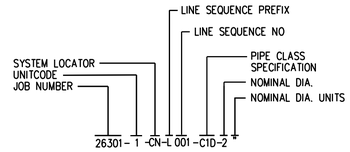

1. JOB NUMBER WILL APPEAR IN THE P&ID TITLE BLOCK AND NOT REPEATED ON THE LINES.
2. FOR ADDITIONAL PIPING INFORMATION AND FULL DETAILS OF THE SPECIFICATION, REFER TO PIPE CLASS SPECIFICATION (26301-000-3DS-P72G-00001) AND M6J-YA-00005.

NO.	DATE	REVISIONS	BY	CHK	APPR
000	07/17/20	ISSUED FOR INFORMATION	MDP	MJC	MJC/ ADB

Owner: U. S. DEPARTMENT OF ENERGY, OFFICE OF FOSSIL ENERGY, NATIONAL ENERGY TECHNOLOGY LABORATORY

FEED STUDY FOR CARBON CAPTURE PLANT RETROFIT

Contractor: BECHTEL NATIONAL, INC.

PIPING & INSTRUMENT DIAGRAM SYMBOLS AND LEGENDS

Sheet Size	Scale	
594 x 841 "A1"	N.T.S	
JOB NO.	DRAWING NO.	REV.
26301	000-M6J-YA-00003	000

Acknowledgment: This material is based upon work supported by the Department of Energy Award Number DE-FE0031648
Disclaimer: This report was prepared as an account of work sponsored by the United States Government. Neither the United States Government nor any agency thereof, nor any of their employees, makes any warranty, express or implied, or assumes any legal liability or responsibility for the accuracy, completeness, or usefulness of any information, apparatus, product, or process disclosed, or represents that its use would not infringe privately owned rights. Reference herein to any specific commercial product, process, or service by trade name, trademark, manufacturer, or otherwise does not necessarily constitute or imply its endorsement, recommendation, or favoring by the United States Government or any agency thereof. The views and opinions of authors expressed herein do not necessarily state or reflect those of the United States Government or any agency thereof.

Acknowledgment: This material is based upon work supported by the Department of Energy Award Number DE-FE0031648

Disclaimer: This report was prepared as an account of work sponsored by an agency of the United States Government. Neither the United States Government nor any agency thereof, nor any of their employees, makes any warranty, express or implied, or assumes any legal liability or responsibility for the accuracy, completeness, or usefulness of any information, apparatus, product, or process disclosed, or represents that its use would not infringe privately owned rights. Reference herein to any specific commercial product, process, or service by trade name, trademark, manufacturer, or otherwise does not necessarily constitute or imply its endorsement, recommendation, or favoring by the United States Government or any agency thereof. The views and opinions of authors expressed herein do not necessarily state or reflect those of the United States Government or any agency thereof.

GENERAL INSTRUMENTS OR FUNCTIONS
(SEE NOTES 8 & 11)

- FIELD MOUNTED INSTRUMENT
- INSTRUMENT FOR TWO MEASURED VARIABLE, OR INSTRUMENT FOR SINGLE MEASURED VARIABLES AND PERFORMING TWO FUNCTIONS
- INSTRUMENT FOR ASME TEST ONLY
- INSTRUMENT FOR ASME TEST PLUS NORMAL USE
- FRONT-OF-PANEL MOUNTED INSTRUMENT
- INSTRUMENT MOUNTED BEHIND OR INTERNAL TO A PANEL
- AUXILIARY PANEL FRONT MOUNTED INSTRUMENT
- AUXILIARY PANEL INTERIOR MOUNTED INSTRUMENT
- SHARED CONTROL, SHARED DISPLAY FUNCTION, NORMALLY ACCESSIBLE TO THE OPERATOR AT PRIMARY PANEL
- SHARED CONTROL, SHARED DISPLAY FUNCTION, FIELD MOUNTED
- DESIGNATES INSTRUMENT SUPPLIED WITH ASSOCIATED EQUIPMENT PACKAGE
- PROGRAMMABLE LOGIC FUNCTION, NORMALLY ACCESSIBLE TO THE OPERATOR AT PRIMARY PANEL
- CONTROL SYSTEMS INTERLOCKS (SEE NOTE 12)
- FIELD MOUNTED COMPUTER FUNCTION
- PANEL MOUNTED PILOT LIGHT

SIGNALS AND LINES

- CONNECTION TO PROCESS OR INSTRUMENT AIR SUPPLY
- PNEUMATIC SIGNAL
- ELECTRIC SIGNAL
- CAPILLARY TUBING (FILLED SYSTEM)
- HYDRAULIC SIGNAL
- ELECTROMAGNETIC OR SONIC SIGNAL (GUIDED) NOTE 11
- ELECTROMAGNETIC OR SONIC SIGNAL (NOT GUIDED) NOTE 11
- INTERNAL SYSTEM LINK (SOFTWARE OR DATALINK)
- UNDEFINED SIGNAL

PRESSURE DEVICES
( ) – SUCCEEDING LETTERS

- DIRECT-CONNECTED
- WITH DIAPHRAGM SEAL, PIPED
- WITH DIAPHRAGM SEAL, LINE MOUNTED OR EQUIPMENT MOUNTED
- PIGTAIL FOR STEAM SERVICE

FLOW DEVICES
( ) – SUCCEEDING LETTERS

- FE – ORIFICE PLATE
  FO – RESTRICTION ORIFICE
- ORIFICE PLATE IN QUICK-CHANGE FITTING
- FLOW NOZZLE
  FLOW TUBE
- VENTURI TUBE
- PITOT OR PITOT-VENTURI TUBE
- FORWARD-REVERSE PITOT TUBE
- AVERAGING PITOT TUBE
- FLUME
- WEIR
- TURBINE OR PROPELLER
- POSITIVE DISPLACEMENT
- VARIABLE AREA
- VORTEX
- TARGET
- MAGNETIC
- SONIC
- V-CONE METER
  ANNULAR ORIFICE METER
- CORIOLIS FLOWMETER
- FLOW STRAIGHTENING VANES
- GENERAL SYMBOL FOR IN-LINE INSTRUMENT
- REGULATOR

TEMPERATURE DEVICES
( ) – SUCCEEDING LETTERS

- TI – BIMETALLIC THERMOMETER
  TW – THERMOWELL
  TE – TEMPERATURE ELEMENT (THERMOCOUPLE, RTD, ETC.)
  RTD (IF APPLICABLE)
- DUAL OR DUPLEX TEMPERATURE ELEMENTS IN ONE WELL WHEN BOTH ELEMENTS ARE CONNECTED TO INSTRUMENTS
- FILLED SYSTEM

LEVEL DEVICES
( ) – SUCCEEDING LETTERS

- GAUGE GLASS OR FLOAT OR DISPLACEMENT TYPE LEVEL INSTRUMENT
- DIFFERENTIAL-PRESSURE TYPE
- FLANGE-MOUNTED DIFFERENTIAL-PRESSURE TYPE (ATMOSPHERIC TANK)
- INTERNAL BALL-FLOAT TYPE
- GAUGE BOARD TYPE
- ELECTROMAGNETIC OR SONIC TYPE (NOT GUIDED), NOTE 11
- ELECTROMAGNETIC OR SONIC TYPE (GUIDED WAVE RADAR) NOTE 11
- COMBINATION GAUGE
- CAPACITANCE OR DIELECTRIC TYPE
- PADDLE OR LEVER

HAND- OR OPERATOR-ACTUATED DEVICES

- HAND – OR OPERATOR-ACTUATED AUTOMATIC VALVE IN PROCESS LINE (NOTE 6)

ANALYSIS DEVICES
( ) – SUCCEEDING LETTERS

- FLOW THROUGH TYPE
- INSERTION TYPE

SELF ACTUATED DEVICES–PRESSURE

- PRESSURE REDUCING REGULATOR, SELF-CONTAINED
- PRESSURE REDUCING REGULATOR, WITH EXTERNAL PRESSURE TAP
- DIFFERENTIAL PRESSURE REDUCING REGULATOR WITH INTERNAL AND EXTERNAL PRESSURE TAP
- BACKPRESSURE REGULATOR SELF-CONTAINED
- BACKPRESSURE REGULATOR WITH EXTERNAL PRESSURE TAP
- PRESSURE RELIEF OR SAFETY VALVE, STRAIGHT THROUGH PATTERN, SPRING OR WEIGHT LOADED, OR WITH INTEGRAL PILOT
- PRESSURE RELIEF OR SAFETY VALVE, ANGLE PATTERN SPRING OR WEIGHT LOADED, OR WITH INTEGRAL PILOT
- VACUUM RELIEF VALVE, ANGLE PATTERN, SPRING OR WEIGHT LOADED, OR WITH INTEGRAL PILOT
- PRESSURE RELIEF OR SAFETY VALVE, ANGLE PATTERN, TRIPPED BY INTEGRAL SOLENOID
- RUPTURE DISK OR SAFETY HEAD FOR PRESSURE RELIEF
- RUPTURE DISK OR SAFETY HEAD FOR VACUUM RELIEF
- COMBINED VACUUM RELIEF PRESSURE SAFETY VALVE

SELF-ACTUATED DEVICES – TEMP

- TEMPERATURE REGULATOR, FILLED-SYSTEM TYPE

SELF-ACTUATED DEVICES – FLOW

- FLOW REGULATOR

SELF-ACTUATED DEVICES – LEVEL

- LEVEL REGULATOR, WITH MECHANICAL LINKAGE

VALVE ACTUATORS

- DIAPHRAGM, SPRING OPPOSED WITH POSITIONER
- DIAPHRAGM, PRESSURE BALANCED
- ROTARY MOTOR (SHOWN TYPICALLY WITH ELECTRIC SIGNAL)
- SPRING–OPPOSED PNEUMATIC CYLINDER SINGLE–ACTING
- PNEUMATIC CYLINDER, DOUBLE–ACTING
- SINGLE–ACTING CYLINDER ASSEMBLED WITH ACTUATING PILOT VALVE
- PNEUMATIC CYLINDER, DOUBLE–ACTING, WITH PILOT VALVE
- SINGLE SOLENOID WITH OPTIONAL MANUAL RESET
- ELECTRO–HYDRAULIC
- HAND ACTUATOR OR HANDWHEEL ON PNEUMATIC VALVE
- UNCLASSIFIED (TYPE OF ACTUATOR TO BE WRITTEN ADJACENT TO THE SYMBOL)

MISCELLANEOUS INSTRUMENTS OR FUNCTIONS

FUNCTION BLOCKS (NOTE 5)

SYMBOLS FUNCTION

- NON–LINEAR OR UNSPECIFIED FUNCTION
- PROPORTIONAL
- SQUARE ROOT EXTRACTOR
- HIGH SELECTING
- LOW SELECTING
- CURRENT–TO–PNEUMATIC CONVERTER
- SUMMING
- MULTIPLYING
- DIVIDING

INTERLOCKS

- HARDWIRE INTERLOCK
- DCS
- PLC

PURGE OR FLUSHING DEVICE

- PURGE DEVICE (MEANS OF REGULATING PURGE MAY BE SHOWN IN PLACE OF THE SYMBOL)

POWER SUPPLIES

NS – NITROGEN SUPPLY
SS – STEAM SUPPLY
WS – WATER SUPPLY
AS – AIR SUPPLY
GS – GAS SUPPLY
HS – HYDRAULIC FLUID SUPPLY

INSTRUMENT FUNCTIONAL IDENTIFICATION

	FIRST LETTERS ( )		SUCCEEDING LETTERS ( )		
	MEASURED OR INITIATING VARIABLE	MODIFIER	READOUT OR PASSIVE FUNCTION	OUTPUT FUNCTION	MODIFIER
A	ANALYSIS (NOTE 4)		ALARM (NOTE 10)		
B	BURNER COMBUSTION		USER'S CHOICE	USER'S CHOICE	USER'S CHOICE
C	CONDUCTIVITY			CONTROL	
D	DENSITY	DIFFERENTIAL			
E	VOLTAGE		SENSOR(PRIMARY ELEMENT)		
F	FLOW RATE	RATIO (FRACTION)			
G	GAGING (DIMENSIONAL)		GLASS, VIEWING DEVICE		
H	HAND (NOTE 6)				HIGH
I	CURRENT		INDICATE		
J	POWER	SCAN			
K	TIME, TIME SCHEDULE	TIME RATE OF CHANGE		CONTROL STATION	
L	LEVEL		LIGHT		LOW
M	MOISTURE	MOMENTARY			
N	USER'S CHOICE (NOTE 2)				
O	USER'S CHOICE (NOTE 2)		ORIFICE, RESTRICTION		
P	PRESSURE, VACUUM		POINT (TEST) CONNECTION		
Q	QUANTITY	INTEGRATE, TOTALIZE			
R	RADIATION		RECORD		
S	SPEED OR FREQUENCY	SAFETY		SWITCH (NOTE 10)	
T	TEMPERATURE			TRANSMIT	
U	MULTIVARIABLE		MULTIFUNCTION	MULTIFUNCTION	MULTIFUNCTION
V	VIBRATION, VISCOSITY			VALVE, DAMPER, LOUVER	
W	WEIGHT, FORCE	WELL			
X	UNCLASSIFIED (NOTE 3)	X AXIS	UNCLASSIFIED	UNCLASSIFIED	UNCLASSIFIED
Y	EVENT, STATE, VIBRATION OR PRESSURE	Y AXIS		RELAY,COMPUTE,CONVERT	
Z	POSITION, DIMENSION (NOTE 9)	Z AXIS		DRIVER, ACTUATOR UNCLASSIFIED FINAL CONTROL ELEMENT	

NOTES:

1. THE INSTRUMENT SYMBOLS AND LEGENDS ARE BASED ON ISA STANDARD S5.1–1992. FOR FURTHER DETAILS AND CLARIFICATION, REFER TO ISA STANDARD.
2. THE USER'S CHOICE LETTERS "N" AND "O" ARE FOR UNLISTED MEANINGS THAT WILL BE USED REPETITIVELY ON A PARTICULAR PROJECT. THE MEANINGS WILL BE DEFINED ONLY ONCE FOR THAT PROJECT AND HAVE ONE AND ONLY ONE MEANING AS THE FIRST LETTER AND ANOTHER SINGLE MEANING AS THE SUCCEEDING LETTER.
3. THE UNCLASSIFIED LETTER "X" IS FOR UNLISTED MEANINGS THAT WILL BE USED ONLY ONCE OR TO A LIMITED EXTENT. IT MAY HAVE ANY NUMBER OF MEANINGS AS A FIRST LETTER AND ANY NUMBER OF MEANINGS AS A SUCCEEDING LETTER EXCEPT FOR ITS USE WITH DISTINCTIVE SYMBOLS. THE MEANINGS WILL BE DEFINED OUTSIDE THE INSTRUMENT CIRCLE.
4. THE LETTER "A" IS USED FOR ALL ANALYSIS VARIABLES. THE FOLLOWING TERMS MAY BE PLACED OUTSIDE THE INSTRUMENT CIRCLE TO DENOTE THE SPECIFIC VARIABLES:

CL2 – CHLORINE	N2 – NITROGEN	O – DISSOLVED OXYGEN	SIO2 – SILICA
CO – CARBON MONOXIDE	NA – SODIUM	O2 – GASEOUS OXYGEN	SO – SULPHUR OXIDES
CO2 – CARBON DIOXIDE	NH3 – AMMONIA	OP – OPACITY	SO2 – SULPHUR DIOXIDE
COMB – COMBUSTIBLE	N2H4 – HYDRAZINE	PH – HYDROGEN ION CONCENTRATION	SMOKE – SMOKE DENSITY
COND – CONDUCTIVITY	HCL – HYDROGEN CHLORIDE		TURB – TURBIDITY
H – DISSOLVED HYDROGEN	NOX – NITROGEN OXIDES	S – SULPHUR	MEA – MONOETHANOL AMINE
H2 – GASEOUS HYDROGEN			H2S – HYDROGEN SULFIDE

5. THE DESCRIPTION DENOTING THE FUNCTION OF THE RELAY, CONVERTER OR COMPUTER "Y" MAY BE SHOWN ON THE P&ID OUTSIDE THE INSTRUMENT BUBBLE WHEN FURTHER DEFINITION IS CONSIDERED NECESSARY.
6. IN THIS CONTEXT, "HV" IS A HAND– OR OPERATOR–ACTUATED VALVE.
7. THE SPECIFIC BOARD OR OTHER LOCATIONS AT WHICH AN INSTRUMENT IS LOCATED MAY BE REFERENCED OUTSIDE THE INSTRUMENT SYMBOL. FOR LOCAL PANELS, THE PANEL REFERENCE IS TO BE PRECEDED BY THE LETTERS "JCL" UNLESS THE PANEL REFERENCE ITSELF IS INDICATIVE.
8. HIGH–HIGH, LOW–LOW, AND HIGH–LOW ALARMS OR SWITCHES WILL BE DESIGNATED BY THE MODIFYING LETTERS "HH", "LL", AND "HL" RESPECTIVELY.
9. PARALLEL STREAM VALVE POSITION SWITCH CONVENTION IS AS FOLLOWS:

VALVE A	ZSO	A	OPEN POSITION	VALVE B	ZSO	B	OPEN POSITION
	ZSC	A	CLOSED POSITION		ZSC	B	CLOSED POSITION

10. TEXT LOCATION AROUND INSTRUMENT SYMBOL SHOULD BE STANDARDIZED AS FOLLOWS:

a – FUNCTION IDENTIFICATION
b – LOOP NUMBER AND SUFFIX
c – PANEL NUMBER (NOTE 7)
d – ASME TEST SYMBOL
e – PACKAGE SUPPLIED INSTRUMENT (*)
f – FUNCTION BLOCK AND DESIGNATIONS
g – MODIFYING LETTERS H, HH, HL, L, LL FOR ALARMS AND SWITCHES
h – SPECIFIC ANALYSIS VARIABLE
i – FUNCTION DEFINITION FOR FIRST–LETTER "X" AND SUCCEEDING LETTER "Y" (NOTES 3 & 5)
j – SYSTEM IDENTIFICATION IF REQUIRED FOR CLARITY OR SAFETY. EXAMPLES: BMS, EBO
k – FIELDBUS INSTRUMENT DENOTED BY "FB"

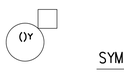

11. ELECTROMAGNETIC PHENOMENA INCLUDE HEAT, RADIO WAVES, NUCLEAR RADIATION, AND LIGHT.
12. INSERT THE FOLLOWING DEPENDING UPON THE REQUIRED INTERLOCK:

PLC – PROGRAMMABLE LOGIC CONTROLLER
DCS – DISTRIBUTED CONTROL SYSTEM
STG – STEAM TURBINE CONTROL SYSTEM
CTG – COMBUSTION TURBINE CONTROL SYSTEM
BMS – BURNER MANAGEMENT CONTROL SYSTEM

13. DO NOT SHOW A SEPARATE BUBBLE FOR THE TW UNLESS THE TW LOOP NUMBER DOES NOT MATCH THAT OF THE TE OR TI. A NOTE SHALL BE INCLUDED IF NO TW IS PROVIDED.

MISCELLANEOUS INSTRUMENTS OR FUNCTIONS (CONT.)

- SPECIAL USE DESUPERHEATER
- PRESSURE REDUCING DESUPERHEATER VALVE
- STRAIGHT THRU DESUPERHEATER

NO.	DATE	REVISIONS	BY	CHK	APPR
000	07/17/20	ISSUED FOR INFORMATION	MDP	MJC	MJC/ADB

Owner
U. S. DEPARTMENT OF ENERGY, OFFICE OF FOSSIL ENERGY, NATIONAL ENERGY TECHNOLOGY LABORATORY

FEED STUDY FOR CARBON CAPTURE PLANT RETROFIT

Contractor
BECHTEL NATIONAL, INC.

PIPING & INSTRUMENT DIAGRAM SYMBOLS AND LEGENDS

Sheet Size 594 x 841 "A1" | Scale N.T.S

JOB NO.	DRAWING NO.	REV.
26301	000-M6J-YA-00004	000

Acknowledgment: This material is based upon work supported by the Department of Energy Award Number DE-FE0031648
Disclaimer: This report was prepared as an account of work sponsored by an agency of the United States Government. Neither the United States Government nor any agency thereof, nor any of their employees, makes any warranty, express or implied, or assumes any legal liability or responsibility for the accuracy, completeness, or usefulness of any information, apparatus, product, or process disclosed, or represents that its use would not infringe privately owned rights. Reference herein to any specific commercial product, process, or service by trade name, trademark, manufacturer, or otherwise does not necessarily constitute or imply its endorsement, recommendation, or favoring by the United States Government or any agency thereof. The views and opinions of authors expressed herein do not necessarily state or reflect those of the United States Government or any agency thereof.

HVAC SYMBOLS

- CENTRIFUGAL BLOWER
- CENTRIFUGAL FAN
- CENTRIFUGAL FAN WITH INLET VANES
- ROTARY FAN
- VANE AXIAL FAN
- AXIAL FAN
- PROPELLER FAN
- UPBLAST ROOF VENTILATOR
- CENTRIFUGAL ROOF VENTILATOR
- POWER ROOF/WALL VENTILATOR (EXHAUST FAN)
- GRAVITY ROOF VENTILATOR (RELIEF)
- DUCTED AIR FLOWS
- AIR MOVEMENT (NON-DUCTED)
- FLOW (CFM) — DUCTED AIR FLOW TO SPACE

HVAC SYMBOLS – CONTINUED

- EXHAUST HOOD
- FLOW (CFM) — DUCTER AIR FLOW FROM SPACE
- OPPOSED BLADE DAMPER
- PARALLEL BLADE DAMPER
- BACKDRAFT OR GRAVITY RELIEF DAMPER
- SINGLE BLADE OR BUTTERFLY DAMPER
- MANUAL BALANCE DAMPER
- FIRE DAMPER OR FIRE DOOR
- FIXED LOUVER
- ADJUSTABLE LOUVER
- LOW-EFFICIENCY ROUGHING FILTER
- LOW-EFFICIENCY ROLL TYPE FILTER
- MODERATE EFFICIENCY FILTER
- HIGH-EFFICENCY PRE-FILTER
- HIGH-EFFICIENCY PARTICULATE AIR FILTER

HVAC SYMBOLS – CONTINUED

- CHAR — IMPREGNATED ACTIVATED CHARCOAL FILTER
- ELEC — ELECTROSTATIC PRECIPITATOR
- SU — LOW-EFFICIENCY FILTER (START-UP)
- BIRD SCREEN FOR VACUUM RELIEF DAMPER
- MS – MOISTURE SEPARATOR
- H/HW
  - H – HEATING COIL
  - PH – PRE-HEATING COIL
  - HW – HOT WATER
  - S – STEAM
  - E – ELECTRIC
- C/CW
  - C – COOLING COIL
  - CH – REFRIG. COOLED CHILLED WATER
  - CW – COOLING WATER
  - DX – REFRIGERANT DIRECT EXPANSION
- HUMIDIFIERS
  - G – LOW PRESSURE STEAM GRID
  - S – STEAM PAN
  - H – HOT WATER PAN
  - E – ELECTRIC PAN
- GUILLOTINE

PIPING CLASS DESIGNATORS

THE SYSTEM TO BE USED TO DEFINE PIPE (AND VALVE) CLASSES CONSISTS OF THREE-CHARACTER CODE. THE FIRST CHARACTER INDICATES THE TYPE OF MATERIAL; THE SECOND CHARACTER, THE PRESSURE CLASS OR PRESSURE-TEMPERATURE RATING; THE THIRD CHARACTER, THE CODE TO WHICH THE PIPING IS DESIGNED. REFER TO PIPING CLASS SPECIFICATION [26301-000-3DS-P72G-G0001] FOR DETAILS ABOUT EACH CLASS.

1ST CHARACTER MATERIAL TYPE
1 CAST IRON – HIGH SILICON
2 CARBON STEEL – CEMENT LINED
3 POLYVINYL CHLORIDE (PVC)
4 ALLOY STEEL (1-1/4 Cr) P11
5 PRESTRESSED CONCRETE CYLINDAR PIPE (PCCP)
6 ALLOY STEEL (5 Cr)
7 POLYETHYLENE
8 AS SPECIFIED
9 ALLOY STEEL (9 Cr – 1 Mo – V), P91
A ALUMINUM
B COPPER/COPPER ALLOY
C CARBON STEEL
D DUCTILE IRON
E HIGH DENSITY POLYETHYLENE (HDPE)
F FIBERGLASS
G CARBON STEEL – GALVANIZED
H CAST IRON – CEMENT LINED

1ST CHARACTER MATERIAL TYPE
I CAST IRON
J DUCTILE IRON – CEMENT LINED
K ALLOY STEEL (2-1/4 Cr) P22
L CARBON STEEL – LOW TEMPERATURE
M MONEL
N NICKEL ALLOY
O (NOT USED)
P CHLORINATED POLYVINYL CHLORIDE (CPVC)
Q CONCRETE
R CARBON STEEL – RUBBER LINED
S STAINLESS STEEL
T TITANIUM
U ALLOY 20
V VITRIFIED CLAY
W CARBON STEEL – COAL TAR EPOXY LINED
X CARBON STEEL – COPPER BEARING
Y CARBON STEEL – IMPACT TESTED
Z CARBON STEEL – PLASTIC LINED

2ND CHARACTER RATING
1 CLASS 150
2 CLASS 250
3 CLASS 300
4 CLASS 400
5 VICTAULIC RATING
6 CLASS 600
7 PRESSFIT RATING
8 CLASS 800
9 CLASS 900
A CLASS 25
B CLASS 50
C CLASS 75 (MANUFACTURER'S RATING)
D 100 PSI (MANUFACTURER'S RATING)
E CLASS 125
F 175 PSI (UL RATING)
G 200 PSI (MANUFACTURER'S RATING)
H 1000 PSI

2ND CHARACTER RATING
I (NOT USED)
J CLASS 1500
K 2000 PSI
L CLASS 2500
M 3000 PSI
N CLASS 4500
O (NOT USED)
P 6000 PSI
Q 9000 PSI
R 10000 PSI
S AS SPECIFIED
T AS SPECIFIED
U SMACNA – AS SPECIFIED
V AS SPECIFIED
W AS SPECIFIED
X AS SPECIFIED
Y AS SPECIFIED
Z SPECIAL CLASS 2500

3RD CHARACTER CODE
1 ASME B31.1, (SPECIAL MATERIAL/RATING)
2 ASME B31.1, (SPECIAL MATERIAL/RATING)
3 ASME B31.1, (SPECIAL MATERIAL/RATING)
4 ASME B31.1, (SPECIAL MATERIAL/RATING)
5 ASME SECTION I, POWER BOILER CODE
6 ASME B31.1, POWER PIPING CODE
7 ASME SECTION I, POWER BOILER CODE
8 ASME B31.1, POWER PIPING CODE
9 ASME SECTION I, POWER BOILER CODE
A (NOT USED)
B (NOT USED)
C (NOT USED)
D ASME B31.1, POWER PIPING CODE
E ASME B31.3, PROCESS PIPING CODE
F NFPA, FIRE PROTECTION CODE
G ASME B31.8, GAS TRANS/DIST CODE
H ASME SECTION I, POWER BOILER CODE
I (NOT USED)
J AWWA, AMERICAN WATER WORKS CODE
K ASME B31.1, POWER PIPNG CODE, SEAMLESS

3RD CHARACTER CODE
L ASME B31.1, ASTM A691, GR 91, CLASS 42 WELDED
M ASME B31.1, POWER PIPING CODE
N NFPA 54, NATIONAL FUEL GAS CODE
O (NOT USED)
P ASME B31.4, LIQUID HYDROCARBON (ET AL) CODE
Q APPLICABLE PLUMBING CODE
R ASME B31.5, REFRIGERATION PIPING CODE
S ASME B31.9, BUILDING SERVICES PIPING CODE
T ASME B31.3
U AASHTO
V (NOT USED)
W ASME B31.1, POWER PIPING CODE
X ASME B31.1, POWER PIPING CODE
Y ASME B31.1, POWER PIPING CODE
Z SMACNA, HVAC DUCTWORK CODE

"AS SPECIFIED" PIPE CLASSES [PROJECT SPECIFIC PIPE CLASSES]

PIPE CLASS	AS SPECIFIED RATING

NO.	DATE	REVISIONS	BY	CHK	APPR
000	07/17/20	ISSUED FOR INFORMATION	MDP	MJC	MJC/ADB

Owner
U. S. DEPARTMENT OF ENERGY, OFFICE OF FOSSIL ENERGY, NATIONAL ENERGY TECHNOLOGY LABORATORY

Contractor
BECHTEL NATIONAL, INC.

FEED STUDY FOR CARBON CAPTURE PLANT RETROFIT

PIPING & INSTRUMENT DIAGRAM SYMBOLS AND LEGENDS

Sheet Size	Scale	
594 x 841 "A1"	N.T.S	
JOB NO.	DRAWING NO.	REV.
26301	000-M6J-YA-00005	000

Acknowledgment: This material is based upon work supported by the Department of Energy Award Number DE-FE0031648
Disclaimer: This report was prepared as an account of work sponsored by an agency of the United States Government. Neither the United States Government nor any agency thereof, nor any of their employees, makes any warranty, express or implied, or assumes any legal liability or responsibility for the accuracy, completeness, or usefulness of any information, apparatus, product, or process disclosed, or represents that its use would not infringe privately owned rights. Reference herein to any specific commercial product, process, or service by trade name, trademark, manufacturer, or otherwise does not necessarily constitute or imply its endorsement, recommendation, or favoring by the United States Government or any agency thereof. The views and opinions of authors expressed herein do not necessarily state or reflect those of the United States Government or any agency thereof.

NOTES:

1. FOR SYMBOLS AND LEGENDS SEE DRAWINGS M6J-YA-00001 THROUGH M6J-YA-00005.
2. ALL LINES, VALVES, EQUIPMENT, AND INSTRUMENT NUMBERS ARE PREFIXED WITH "PA", UNLESS NOTED OTHERWISE.
3. ALL VENTS DRAINS AND INSTRUMENTATION ROOT VALVES ARE 1" UNLESS NOTED OTHERWISE.
4. * SYMBOL INDICATES EQUIPMENT SUPPLIED BY VENDOR.
5. AUTOMATIC DRAINS VALVE TIMER SEQUENCE TO BE PROVIDED BY VENDOR.
6. DETAILS OF AIR COMPRESSOR, RECEIVER AND DRYER TO BE FINALISED BASED ON VENDOR DETAILS DURING DETAILED ENGINEERING.
7. THE OWNER SUPPLIED PORTABLE AIR COMPRESSOR SHALL NOT EXCEED A MAXIMUM DISCHARGE PRESSURE OF 13.8 BARG.
8. "IA" IS INSTRUMENT AIR AND "SA" IS SERVICE AIR/PLANT AIR.
9. FOR FULL DETAILS OF SHUTDOWN LOGIC (ESD) REFER TO 26301-000-J4-JD-00001.

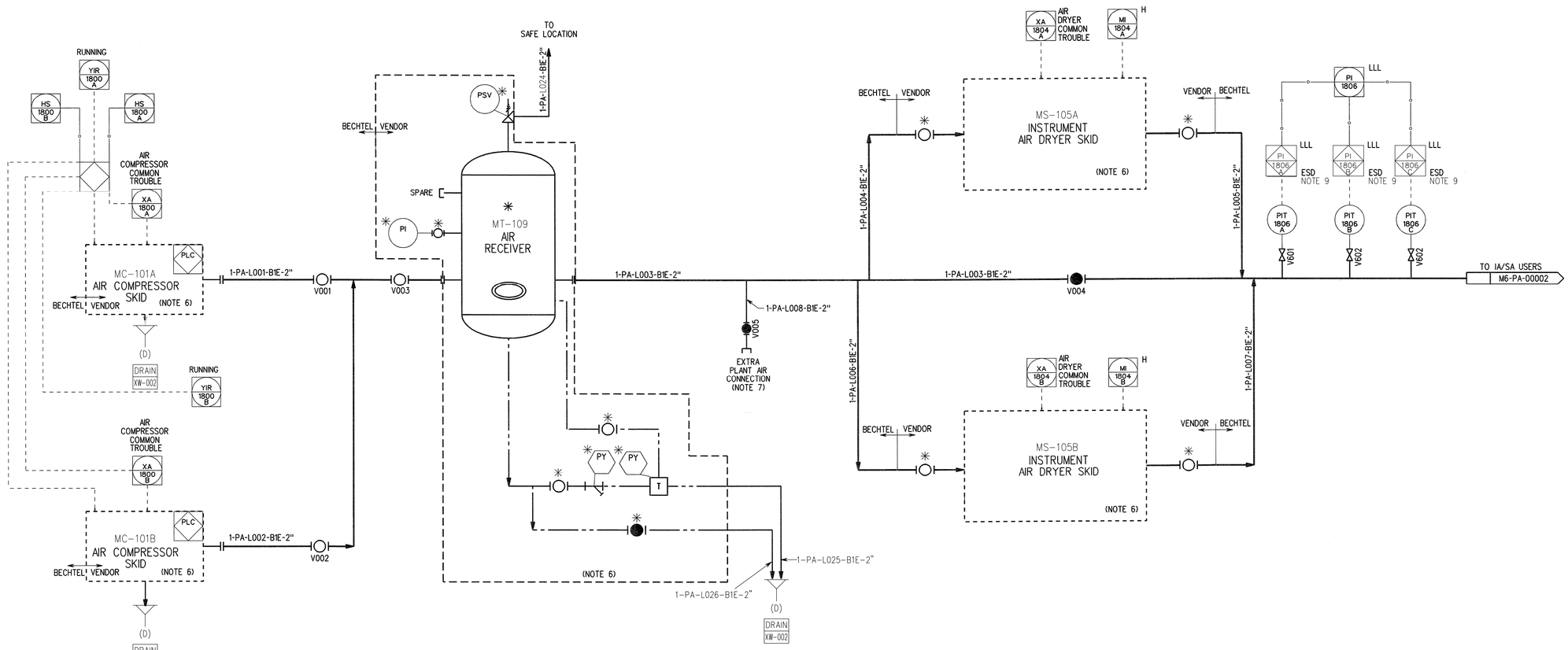

NO.	DATE	REVISIONS	BY	CHK	APPR
000	07/24/20	ISSUED FOR INFORMATION	MDP	MJC	MJC/ADB

Owner: U. S. DEPARTMENT OF ENERGY, OFFICE OF FOSSIL ENERGY, NATIONAL ENERGY TECHNOLOGY LABORATORY

FEED STUDY FOR CARBON CAPTURE PLANT RETROFIT

Contractor: BECHTEL NATIONAL, INC.

PIPING & INSTRUMENT DIAGRAM COMPRESSED AIR SYSTEM

Sheet Size: 594 X 841 "A1" | Scale: N.T.S

JOB NO.	DRAWING NO.	REV.
26301	000-M6-PA-00001	000

Acknowledgment: This material is based upon work supported by the Department of Energy Award Number DE-FE0031848
Disclaimer: This report was prepared as an account of work sponsored by an agency of the United States Government. Neither the United States Government nor any agency thereof, nor any of their employees, makes any warranty, express or implied, or assumes any legal liability or responsibility for the accuracy, completeness, or usefulness of any information, apparatus, product, or process disclosed, or represents that its use would not infringe privately owned rights. Reference herein to any specific commercial product, process, or service by trade name, trademark, manufacturer, or otherwise does not necessarily constitute or imply its endorsement, recommendation, or favoring by the United States Government or any agency thereof. The views and opinions of authors expressed herein do not necessarily state or reflect those of the United States Government or any agency thereof.

NOTES:

1. FOR SYMBOLS AND LEGENDS SEE DRAWINGS M6J-YA-00001 THROUGH M6J-YA-00005.
2. ALL LINES, VALVES, EQUIPMENT, AND INSTRUMENT NUMBERS ARE PREFIXED WITH "PA", UNLESS NOTED OTHERWISE.
3. ALL VENTS DRAINS AND INSTRUMENTATION ROOT VALVES ARE 1" UNLESS NOTED OTHERWISE.
4. "IA" IS INSTRUMENT AIR AND "SA" IS SERVICE AIR/PLANT AIR.

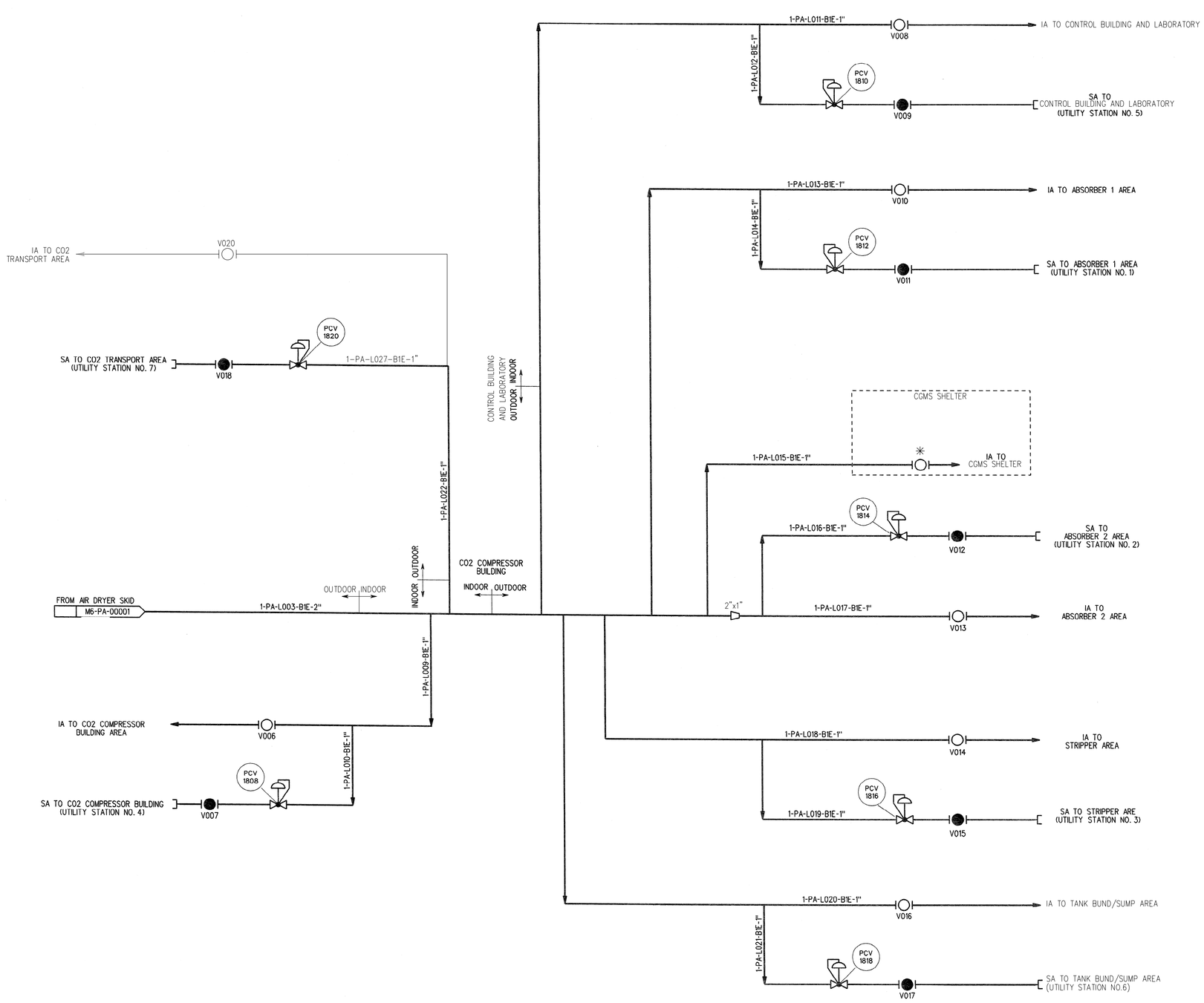

NO.	DATE	REVISIONS	BY	CHK	APPR
000	07/24/20	ISSUED FOR INFORMATION	MDP	MJC	MJC/ADB

Owner
U. S. DEPARTMENT OF ENERGY, OFFICE OF FOSSIL ENERGY, NATIONAL ENERGY TECHNOLOGY LABORATORY

Contractor
BECHTEL NATIONAL, INC.

FEED STUDY FOR CARBON CAPTURE PLANT RETROFIT

PIPING & INSTRUMENT DIAGRAM
COMPRESSED AIR SYSTEM

Sheet Size 594 X 841 "A1" | Scale N.T.S

JOB NO.	DRAWING NO.	REV.
26301	000-M6-PA-00002	000

Acknowledgment: This material is based upon work supported by the Department of Energy Award Number DE-FE0031648
This report was prepared as an account of work sponsored by an agency of the United States Government. Neither the United States Government nor any agency thereof, nor any of their employees, makes any warranty, express or implied, or assumes any legal liability or responsibility for the accuracy, completeness, or usefulness of any information, apparatus, product, or process disclosed, or represents that its use would not infringe privately owned rights. Reference herein to any specific commercial product, process, or service by trade name, trademark, manufacturer, or otherwise does not necessarily constitute or imply its endorsement, recommendation, or favoring by the United States Government or any agency thereof. The views and opinions of authors expressed herein do not necessarily state or reflect those of the United States Government or any agency thereof.

NOTES:

1. FOR SYMBOLS AND LEGENDS SEE DRAWINGS M6J-YA-00001 THROUGH M6J-YA-00005.
2. ALL LINES, VALVES, EQUIPMENT, AND INSTRUMENT NUMBERS ARE PREFIXED WITH "PF", UNLESS NOTED OTHERWISE.
3. ALL VENTS DRAINS AND INSTRUMENTATION ROOT VALVES ARE 1" UNLESS NOTED OTHERWISE.
4. * SYMBOL INDICATES EQUIPMENT SUPPLIED BY VENDOR.
5. FIRE DEPARTMENT CONNECTIONS SHALL BE 2.5" Y-TYPE SIAMESE CONNECTIONS IN ACCORDANCE WITH NFPA13. THEY SHALL BE LOCATED NO MORE THAN 100 FT FROM THE NEAREST FIRE HYDRANT.
6. FIRE WATER SUPPLY LINE IN VALVE PIT HAS 1" INSULATION.

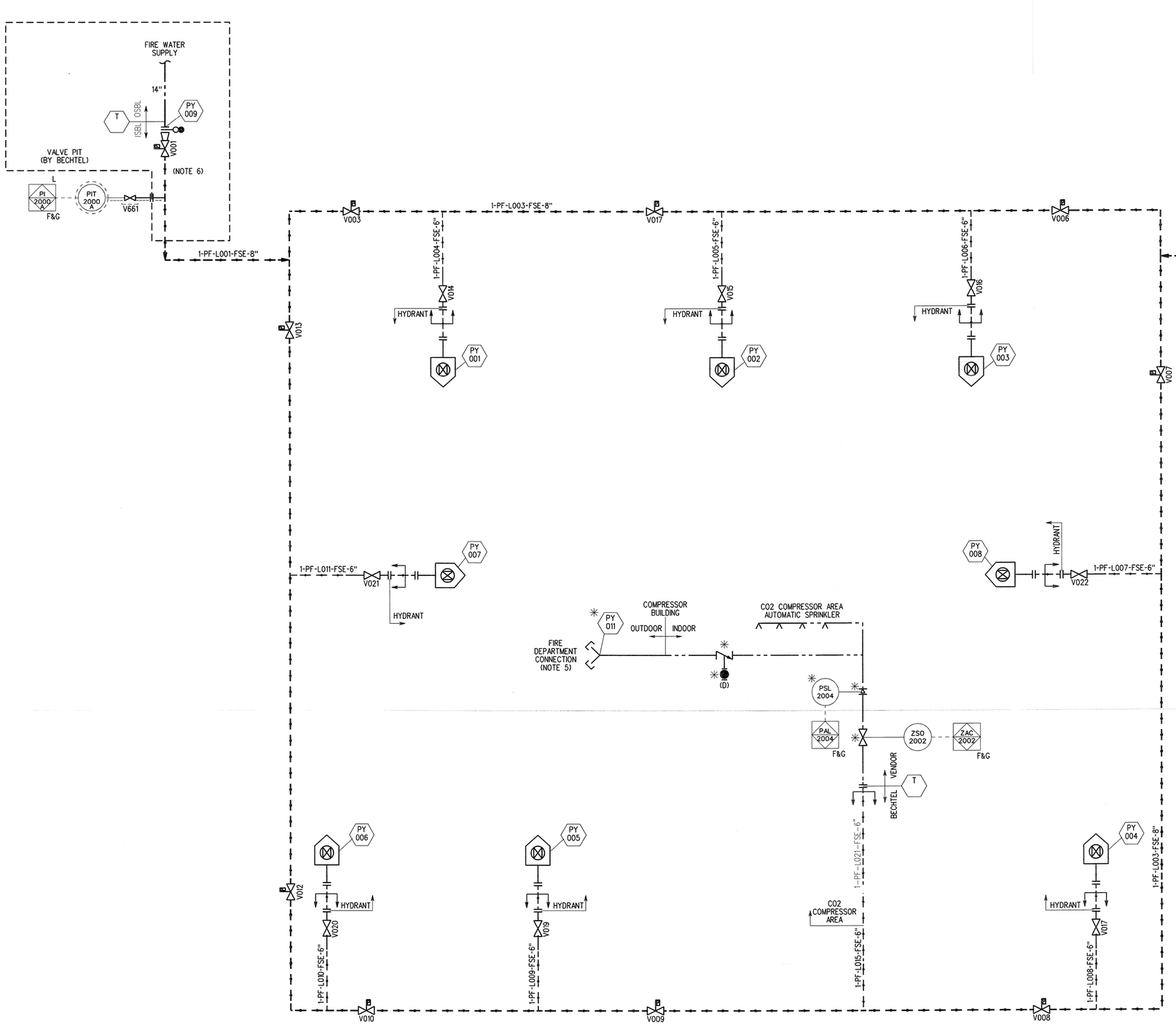

NO.	DATE	REVISIONS	BY	CHK	APPR
000	07/24/20	ISSUED FOR INFORMATION	MDP	MJC	MJC/ ADB

Owner: U. S. DEPARTMENT OF ENERGY, OFFICE OF FOSSIL ENERGY, NATIONAL ENERGY TECHNOLOGY LABORATORY

Contractor: BECHTEL NATIONAL, INC.

FEED STUDY FOR CARBON CAPTURE PLANT RETROFIT

PIPING & INSTRUMENT DIAGRAM
FIRE PROTECTION SYSTEM

Sheet Size	Scale	
594 X 841 "A1"	N.T.S	
JOB NO.	DRAWING NO.	REV.
26301	000-M6-PF-00001	000

Acknowledgment: This material is based upon work supported by the Department of Energy Award Number DE-FE0031648
Disclaimer: This report was prepared as an account of work sponsored by the United States Government. Neither the United States Government nor any agency thereof, nor any of their employees, makes any warranty, express or implied, or assumes any legal liability or responsibility for the accuracy, completeness, or usefulness of any information, apparatus, product, or process disclosed, or represents that its use would not infringe privately owned rights. Reference herein to any specific commercial product, process, or service by trade name, trademark, manufacturer, or otherwise does not necessarily constitute or imply its endorsement, recommendation, or favoring by the United States Government or any agency thereof. The views and opinions of authors expressed herein do not necessarily state or reflect those of the United States Government or any agency thereof.

MS-106

NITROGEN GAS SUPPLY PACKAGE

NOTES:

1. FOR SYMBOLS AND LEGENDS SEE DRAWINGS M6J-YA-00001 THROUGH M6J-YA-00005.
2. ALL LINES, VALVES, EQUIPMENT, AND INSTRUMENT NUMBERS ARE PREFIXED WITH "PG", UNLESS NOTED OTHERWISE.
3. ALL VENTS DRAINS AND INSTRUMENTATION ROOT VALVES ARE 1" UNLESS NOTED OTHERWISE.
4. * SYMBOL INDICATES EQUIPMENT SUPPLIED BY VENDOR.
5. VALVES AT THIS LOCATION ARE SPRING LOADED CHECK VALVES.

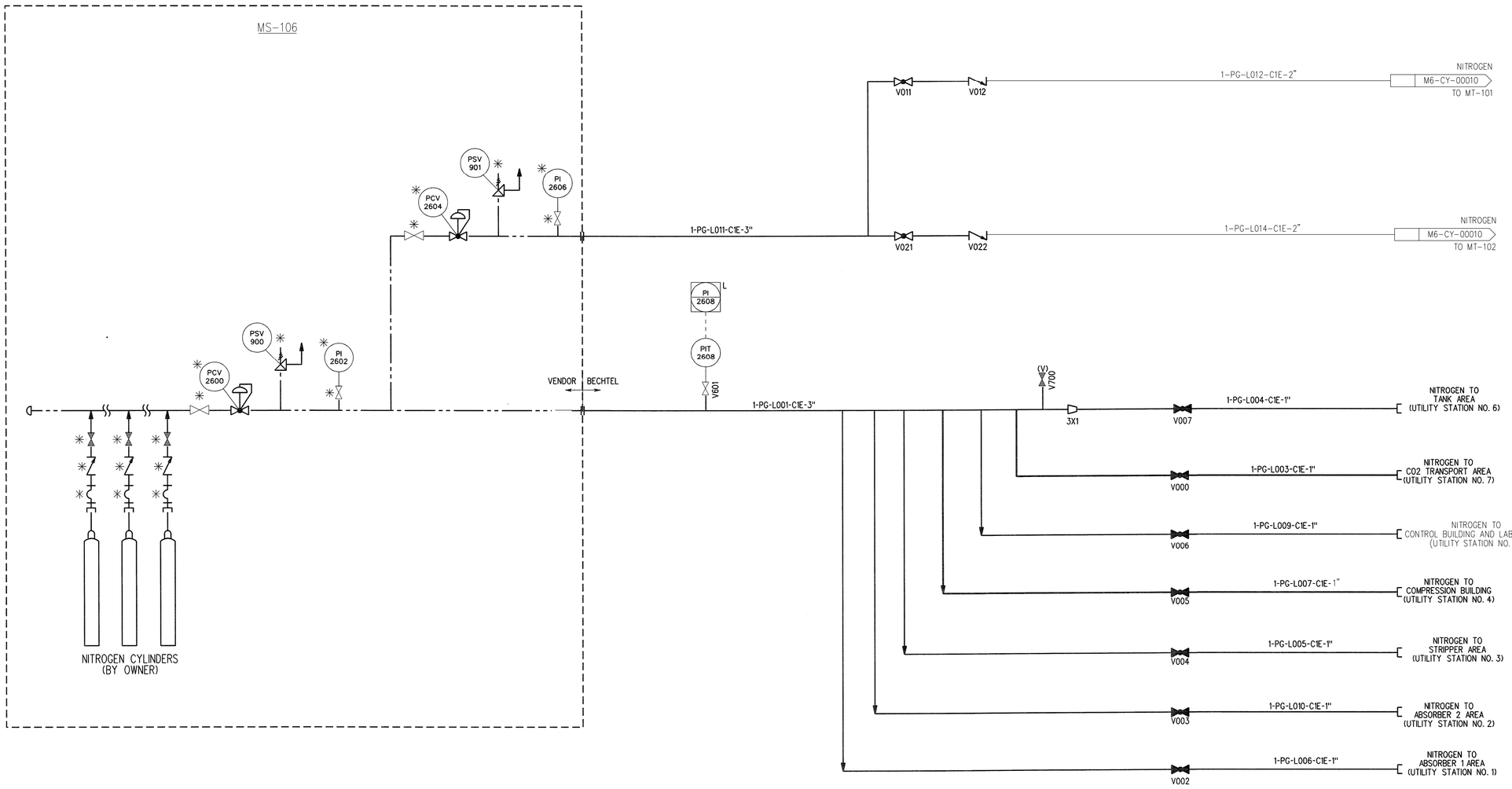

NO.	DATE	REVISIONS	BY	CHK	APPR
000	07/24/20	ISSUED FOR INFORMATION	MDP	MJC	MJC/ADB

Owner
U. S. DEPARTMENT OF ENERGY, OFFICE OF FOSSIL ENERGY, NATIONAL ENERGY TECHNOLOGY LABORATORY

Contractor
BECHTEL NATIONAL, INC.

FEED STUDY FOR CARBON CAPTURE PLANT RETROFIT

PIPING & INSTRUMENT DIAGRAM
NITROGEN GAS SYSTEM

Sheet Size 594 X 841 "A1" | Scale N.T.S

JOB NO.	DRAWING NO.	REV.
26301	000-M6-PG-00001	000

NOTES:

1. FOR SYMBOLS AND LEGENDS SEE DRAWINGS M6J-YA-00001 THROUGH M6J-YA-00005.
2. ALL LINES, VALVES, EQUIPMENT, AND INSTRUMENT NUMBERS ARE PREFIXED WITH "PW", UNLESS NOTED OTHERWISE.
3. ALL VENTS DRAINS AND INSTRUMENTATION ROOT VALVES ARE 1" UNLESS NOTED OTHERWISE.
4. * SYMBOL INDICATES EQUIPMENT SUPPLIED BY VENDOR.
5. TEMPERATURE CONTROLLED EMERGENCY SAFETY SHOWER (INTEGRAL IN-LINE HEATER SUPPLIED WITH SHOWER.)
6. BOTTLED WATER FILLED TEMPERATURE CONTROLLED EYEWASH. (INTEGRAL HEATER SUPPLIED WITH EYEWASH.)

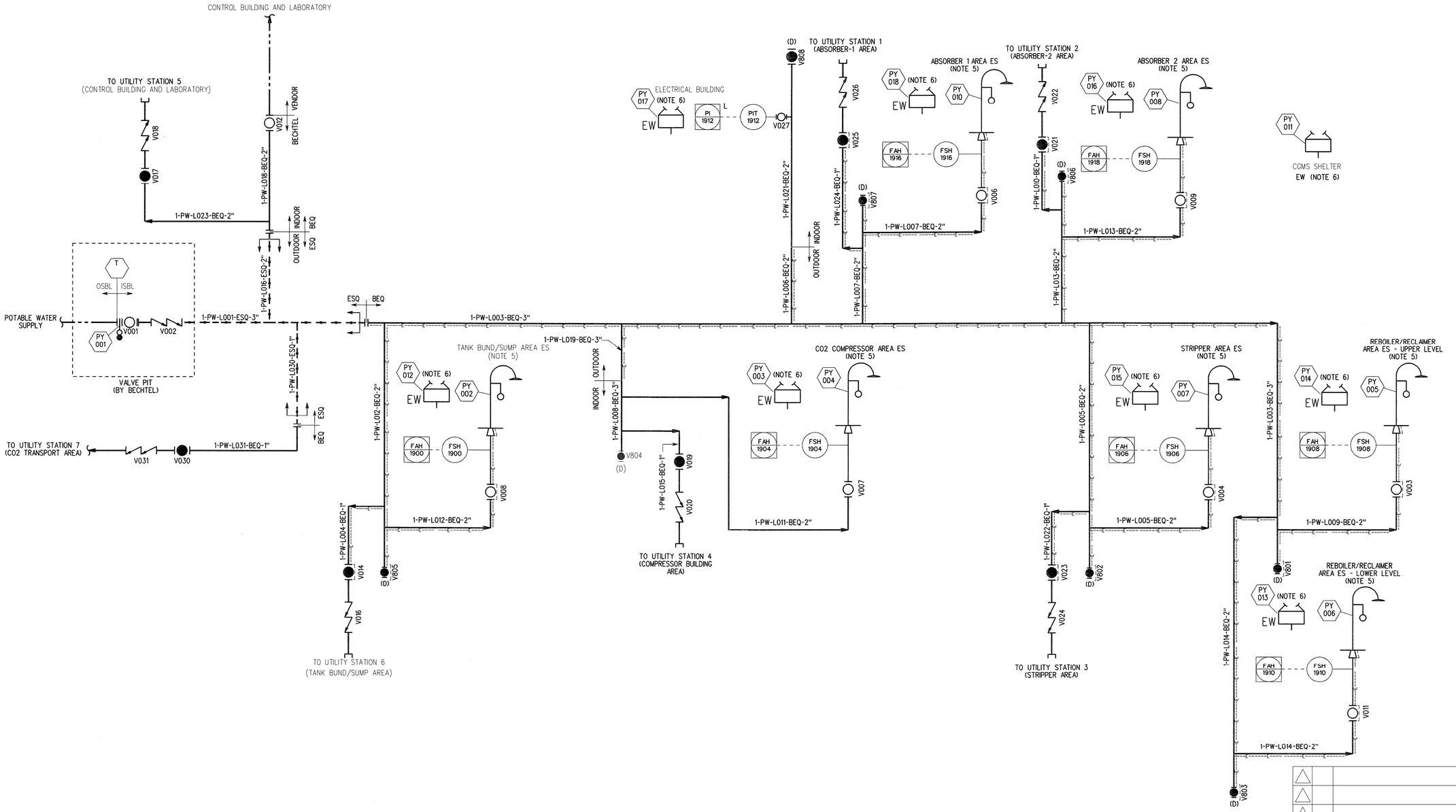

NO.	DATE	REVISIONS	BY	CHK	APPR
000	07/24/20	ISSUED FOR INFORMATION	MDP	MJC	MJC/ADB

Owner
U.S. DEPARTMENT OF ENERGY, OFFICE OF FOSSIL ENERGY, NATIONAL ENERGY TECHNOLOGY LABORATORY

Contractor
BECHTEL NATIONAL, INC.

FEED STUDY FOR CARBON CAPTURE PLANT RETROFIT

PIPING & INSTRUMENT DIAGRAM
POTABLE WATER SYSTEM

Sheet Size 594 X 841 "A1" Scale N.T.S

JOB NO.	DRAWING NO.	REV.
26301	000-M6-PW-00001	000

Acknowledgment: This material is based upon work supported by the Department of Energy Award Number DE-FE0031648
Disclaimer: This report was prepared as an account of work sponsored by an agency of the United States Government. Neither the United States Government nor any agency thereof, nor any of their employees, makes any warranty, express or implied, or assumes any legal liability or responsibility for the accuracy, completeness, or usefulness of any information, apparatus, product, or process disclosed, or represents that its use would not infringe privately owned rights. Reference herein to any specific commercial product, process, or service by trade name, trademark, manufacturer, or otherwise does not necessarily constitute or imply its endorsement, recommendation, or favoring by the United States Government or any agency thereof. The views and opinions of authors expressed herein do not necessarily state or reflect those of the United States Government or any agency thereof.

Acknowledgment: This material is based upon work supported by the Department of Energy Award Number DE-FE0031948

Disclaimer: This report was prepared as an account of work sponsored by an agency of the United States Government. Neither the United States Government nor any agency thereof, nor any of their employees, makes any warranty, express or implied, or assumes any legal liability or responsibility for the accuracy, completeness, or usefulness of any information, apparatus, product, or process disclosed, or represents that its use would not infringe privately owned rights. Reference herein to any specific commercial product, process, or service by trade name, trademark, manufacturer, or otherwise does not necessarily constitute or imply its endorsement, recommendation, or favoring by the United States Government or any agency thereof. The views and opinions of authors expressed herein do not necessarily state or reflect those of the United States Government or any agency thereof.

MV-203

CO2 COMPRESSOR SUCTION DRUM

CO2 DRY VENT
–
TO T-102

1-QG-L676-S1E-24"

NOTE 4

CO2 DRY VENT
M6-CN-00020
TO T-101

1-QG-L666-S1E-24"

SLOPE NOTE 12 SLOPE

1-QG-L666-S1E-24"

CO2 VENT HEADER
M6-QG-00040

V840 (D)

1-QG-L702-S1E-8"

V215 V213 V214 V216

LI 0810 NOTE 13

LT 0810

LSH 0800

LAH 0800

PSET=3.45 BARG PSV 0909

V162 LO

1-QG-L669-S1E-12" NO POCKETS

V458 (D)

1-QG-L668-S1E-10"

V734 (V)

1-QG-L594-S1E-10"

LO V161

LC V004

16"X 10"

1-QG-L667-S1E-10"

PSET=3.45 BARG PSV 0900

V008 LO

1-QG-L584-S1E-12" NO POCKETS

V809 (D)

V704 (V)

LO V026

PY –

PY –

SLOPE

V211 T V210

V910 (D)

V911 (D) NOTE 13

1-QG-L703-S1E-2"

(D)

DRAIN XW-001

AP 0700 GRAB

V610

FREE DRAINING

1-QG-L551-S1E-24"

CO2
M6-QG-00020
TO MC-103 1ST STAGE

1-QG-L583-S1E-16"

(V) 2" V702

24"

16"

24" MW

MV-203

ESD HS 0714

ZI 0714

HY 0714

ESD ZI 0714

ZSC 0714 AS

ZSO 0714

HV 0714 DE V

CO2
M6-CN-00140
FROM MV-202

1-QG-L643-S1E-24"

NO POCKETS

FL

OUTSIDE BUILDING

INSIDE BUILDING

1-QG-L644-S1E-24"

36"x24"

36"

(V) V730 (V) V731 (V) V732

2" V609 V608 V607 V606 V605 V604

(V) V703 V634 2"

LG 0702

V635 2"

V808 (D)

V025 2"

EL. MIN FOR PIPING

LIT 0704A LIT 0704B LIT 0704C

LI 0704A LI 0704C LI 0704B LIC 0704 H L

ON/OFF

(D) V802 (D) V803 (D) V804

LAHH 0704 (2oo3)

(NOTE 3)

LALL 0704

2"

2" V807 (D)

REMOVABLE SPOOL

LV 0704

ZI 0704

1-QG-L580-S1E-2"

V005 AS V006

FC 1"

(D) V805 (D) V806 (D)

V007

INSIDE BUILDING

OUTSIDE BUILDING

1-QG-L677-S1E-2"

(D)

DRAIN XW-001

NOTES:

1. FOR STANDARD SYMBOLS, DETAILS AND LEGENDS SEE DRAWINGS M6J-YA-00001 THROUGH M6J-YA-00005
2. ALL LINES, VALVES, EQUIPMENT, AND INSTRUMENT NUMBERS ARE PREFIXED WITH "QG", UNLESS NOTED OTHERWISE.
3. ALL VENTS, DRAINS AND INSTRUMENTATION ROOT VALVES ARE 1" UNLESS NOTED OTHERWISE.
4. SYMMETRICAL PIPING TO T-101/T-102
5. EQUIPMENT, INSTRUMENTS AND PIPING ASSUMED TO BE INSIDE HEATED BUILDING.
6. 2oo3 LEVEL TRANSMITTERS HHLL WILL TRIP COMPRESSORS AND LLLL WILL CLOSE LV-0712.
7. CONTROL VALVE AND PSV SIZES TO BE CONFIRMED DURING DETAILED ENGINEERING.
8. GOVERNING CASE FOR PSV AND PSV INLET/OUTLET LINE SIZES TO BE CONFIRMED DURING DETAILED ENGINEERING.
9. ALL VENTS IN CO2 SERVICE SHALL BE HARD PIPED TO VENT HEADER UNLESS A DEPRESSURING ROUTE TO THE VENT SYSTEM IS ALREADY AVAILABLE.
10. FOR FULL DETAILS OF SHUTDOWN LOGIC (ESD) REFER TO 26301-000-J4-JD-00001.
11. VENT AND DRAIN VALVES LOCATED INSIDE BUILDING TO BE ROUTED TO CLOSED SYSTEMS TO AVOID RELEASE WITHIN BUILDING.
12. LOW POINT DRAIN POINT FOR DRY VENT HEADER.
13. LI-0810 TO BE VISIBLE FROM V911. DRAIN VALVE (V911) ON LIQUID LEG TO BE NORMALLY CLOSED.

NO.	DATE	REVISIONS	BY	CHK	APPR
000	07/31/20	ISSUED FOR INFORMATION	MDP	MJC	MJC/ ADB

Owner
U. S. DEPARTMENT OF ENERGY, OFFICE OF FOSSIL ENERGY, NATIONAL ENERGY TECHNOLOGY LABORATORY

FEED STUDY FOR CARBON CAPTURE PLANT RETROFIT

Contractor
BECHTEL NATIONAL, INC.

PIPING & INSTRUMENT DIAGRAM
CO2 COMPRESSOR SUCTION DRUM

Sheet Size	Scale	
594 X 841 "A1"	N.T.S	
JOB NO.	DRAWING NO.	REV.
26301	000-M6-QG-00010	000

Acknowledgment: This material is based upon work supported by the Department of Energy Award Number DE-FE0031648

Disclaimer: This report was prepared as an account of work sponsored by the United States Government. Neither the United States Government nor any agency thereof, nor any of their employees, makes any warranty, express or implied, or assumes any legal liability or responsibility for the accuracy, completeness, or usefulness of any information, apparatus, product, or process disclosed, or represents that its use would not infringe privately owned rights. Reference herein to any specific commercial product, process, or service by trade name, trademark, manufacturer, or otherwise does not necessarily constitute or imply its endorsement, recommendation, or favoring by the United States Government or any agency thereof. The views and opinions of authors expressed herein do not necessarily state or reflect those of the United States Government or any agency thereof.

CONTROL SIGNAL
M6-CN-00140
FROM MV-202 OVERHEAD

CO2
M6-QG-00010
FROM MV-203

1-QG-L551-S1E-24"

PIC 0716

PIT 0716A
PIT 0716B
V611
V612

PY
V810 (D)
V811 (D)
(NOTE 5)

TI 0720
PI 0718
PI 0722
TI 0728
FI 0726
FI 0730
(NOTE 7)

XC

FIT 0726A
FIT 0726B
V620
V619
V618
V617
TE 0728A RTD
TE 0728B RTD
FE 0726

PY
(NOTE 6)
V010 LO
V812 (D)
1-QG-L552-S1E-18"
FREE DRAINING
CO2
M6-QG-00030
TO ME-112

FIT 0730A
V624
V623
FIT 0730B
V622
V621
FE 0730
FREE DRAINING

FC
SP
ZI 0732
HS 0732
FY 0732
FV 0732
1-QG-L586-S1E-18"
V012
V814 (D)
FO 16"
V013
DE
ATM
AS
V813 (D)
V011

V015
V014 LO
1-QG-L588-S1E-20"
FREE DRAINING
1ST STAGE ANTI-SURGE
M6-CN-00130
TO ME-111

PIT 0718A
V613
(NOTE 8)
PIT 0718B
V614
(NOTE 8)
TE 0720A
(NOTE 8)
TE 0720B
(NOTE 8)
V009 LO

TE 0724C
(NOTE 8)
TI 0724C
TAHH 0724
(2oo3)
TE 0724B
(NOTE 8)
TI 0724B
TI 0724
H
(NOTE 9)
TE 0724A
(NOTE 8)
TI 0724A

V616
PIT 0722B
(NOTE 8)
V615
PIT 0722A
(NOTE 8)

BECHTEL VENDOR
HS 0719
M
MC-103
1ST STAGE
SI 0721
ST 0721
VFD

MC-103
CO2 COMPRESSOR (1ST STAGE)

NOTES:

1. FOR STANDARD SYMBOLS, DETAILS AND LEGENDS SEE DRAWINGS M6J-YA-00001 THROUGH M6J-YA-00005
2. ALL LINES, VALVES, EQUIPMENT, AND INSTRUMENT NUMBERS ARE PREFIXED WITH "QG", UNLESS NOTED OTHERWISE.
3. ALL VENTS, DRAINS AND INSTRUMENTATION ROOT VALVES ARE 1" UNLESS NOTED OTHERWISE.
4. EQUIPMENT, INSTRUMENTS AND PIPING ASSUMED TO BE INSIDE HEATED BUILDING.
5. TEMPORARY STRAINER AND PRESSURE TAPPINGS FOR START-UP. STRAINER TO BE REMOVED AFTER START-UP.
6. USE LOW PRESSURE NON-SLAM CHECK VALVE.
7. 1ST STAGE ANTI-SURGE CONTROLLER.
8. PRESSURE AND TEMPERATURE TRANSMITTERS SHOULD BE AS CLOSE AS POSSIBLE TO COMPRESSOR SUCTION/DISCHARGE.
9. 2oo3 HIGH TEMPERATURE SWITCHES, HIGH LEVEL IN SUCTION DRUMS (MV-203, MV-104, MV-105) OR HIGH LEVEL IN CO2 SURGE DRUM (MV-106) WILL TRIP COMPRESSOR
10. CONTROL VALVE SIZES TO BE CONFIRMED DURING DETAILED ENGINEERING.
11. AUXILIARY EQUIPMENT/CONFIGURATION DETAILS TO BE CONFIRMED DURING DETAILED ENGINEERING.
12. COMPRESSOR VENDOR DETAILS, INCLUDING ANTI-SURGE CONTROL SCHEME TO BE FINALISED BASED ON VENDOR INFORMATION DURING DETAILED ENGINEERING.
13. ALL VENTS/DRAINS IN CO2 SERVICE SHALL BE HARD PIPED TO VENT HEADER UNLESS A DEPRESSURING ROUTE TO THE VENT SYSTEM IS ALREADY AVAILABLE.
14. VENT AND DRAIN VALVES LOCATED INSIDE BUILDING TO BE ROUTED TO CLOSED SYSTEMS TO AVOID RELEASE WITHIN BUILDING.

NO.	DATE	REVISIONS	BY	CHK	APPR
000	07/24/20	ISSUED FOR INFORMATION	MDP	MJC	MJC/ADB

Owner
U.S. DEPARTMENT OF ENERGY, OFFICE OF FOSSIL ENERGY, NATIONAL ENERGY TECHNOLOGY LABORATORY

Contractor
BECHTEL NATIONAL, INC.

FEED STUDY FOR CARBON CAPTURE PLANT RETROFIT

PIPING & INSTRUMENT DIAGRAM
CO2 COMPRESSOR
1ST STAGE

Sheet Size 594 X 841 "A1" Scale N.T.S

JOB NO.	DRAWING NO.	REV.
26301	000-M6-QG-00020	000

Acknowledgment: This material is based upon work supported by the Department of Energy Award Number DE-FE0031848
Disclaimer: This report was prepared as an account of work sponsored by an agency of the United States Government. Neither the United States Government nor any agency thereof, nor any of their employees, makes any warranty, express or implied, or assumes any legal liability or responsibility for the accuracy, completeness, or usefulness of any information, apparatus, product, or process disclosed, or represents that its use would not infringe privately owned rights. Reference herein to any specific commercial product, process, or service by trade name, trademark, manufacturer, or otherwise does not necessarily constitute or imply its endorsement, recommendation, or favoring by the United States Government or any agency thereof. The views and opinions of authors expressed herein do not necessarily state or reflect those of the United States Government or any agency thereof.

ME-112
CO2 COMPRESSOR 1ST STAGE
STEAM GENERATOR

ME-113
CO2 COMPRESSOR 1ST STAGE INTERCOOLER

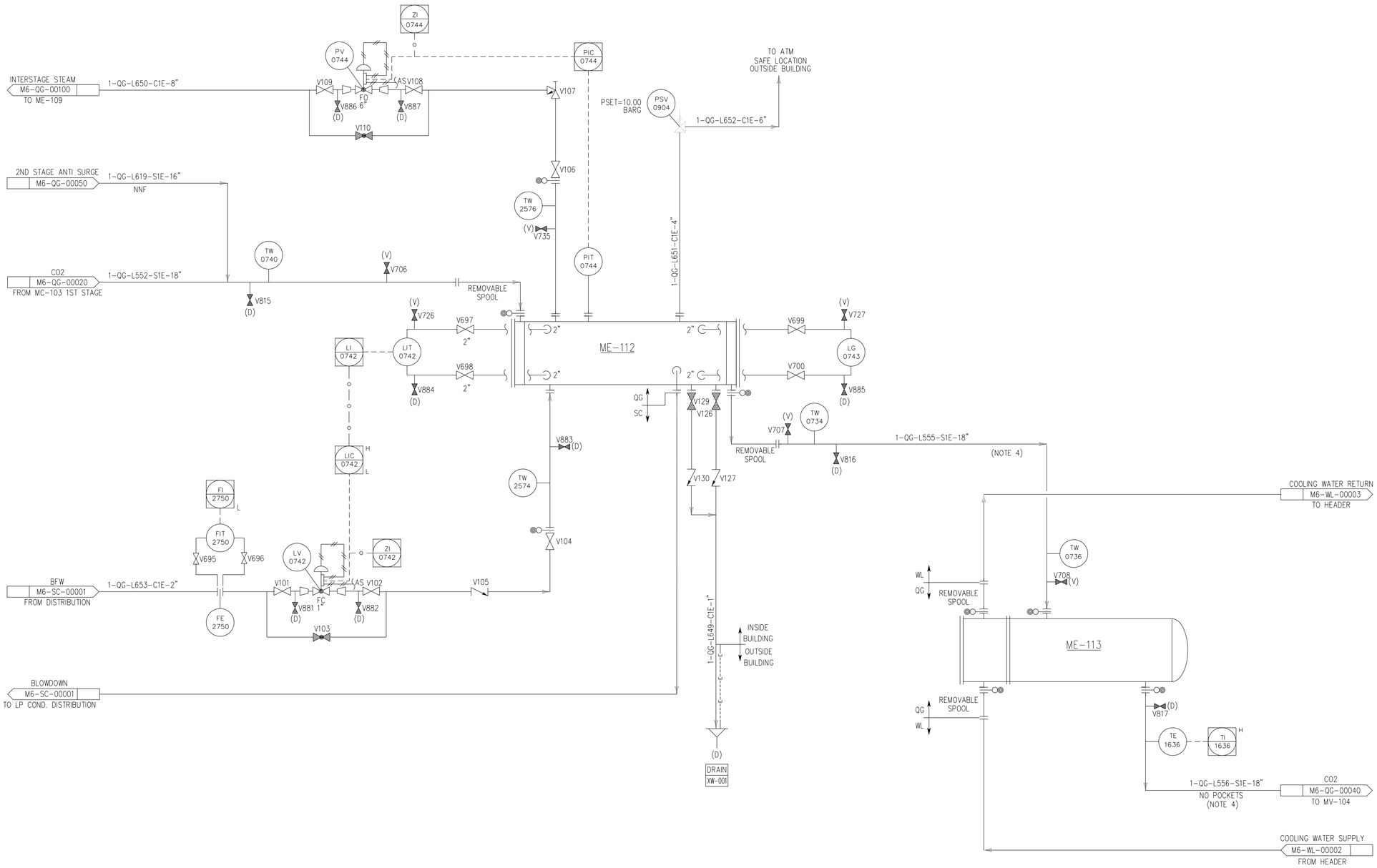

NOTES:

1. FOR STANDARD SYMBOLS, DETAILS AND LEGENDS SEE DRAWINGS M6J-YA-00001 THROUGH M6J-YA-00005
2. ALL LINES, VALVES, EQUIPMENT, AND INSTRUMENT NUMBERS ARE PREFIXED WITH "QG", UNLESS NOTED OTHERWISE.
3. ALL VENTS, DRAINS AND INSTRUMENTATION ROOT VALVES ARE 1" UNLESS NOTED OTHERWISE.
4. TWO PHASE FLOW.
5. EQUIPMENT, INSTRUMENTS AND PIPING ASSUMED TO BE INSIDE HEATED BUILDING.
6. CONTROL VALVE SIZES TO BE CONFIRMED DURING DETAILED ENGINEERING.
7. GOVERNING CASE FOR PSV AND PSV INLET/OUTLET LINE SIZES TO BE CONFIRMED DURING DETAILED ENGINEERING.
8. ALL VENTS IN CO2 SERVICE SHALL BE HARD PIPED TO VENT HEADER UNLESS A DEPRESSURING ROUTE TO THE VENT SYSTEM IS ALREADY AVAILABLE.
9. VENT AND DRAIN VALVES LOCATED INSIDE BUILDING TO BE ROUTED TO CLOSED SYSTEMS TO AVOID RELEASE WITHIN BUILDING.

NO.	DATE	REVISIONS	BY	CHK	APPR
000	07/24/20	ISSUED FOR INFORMATION	MDP	MJC	MJC/ADB

Owner
U. S. DEPARTMENT OF ENERGY, OFFICE OF FOSSIL ENERGY, NATIONAL ENERGY TECHNOLOGY LABORATORY

Contractor
BECHTEL NATIONAL, INC.

FEED STUDY FOR CARBON CAPTURE PLANT RETROFIT

PIPING & INSTRUMENT DIAGRAM CO2 COMPRESSOR 1ST STAGE STEAM GENERATOR AND INTERCOOLER

Sheet Size 594 X 841 "A1" | Scale N.T.S

JOB NO.	DRAWING NO.	REV.
26301	000-M6-QG-00030	000

Acknowledgment: This material is based upon work supported by the Department of Energy Award Number DE-FE0031648
Disclaimer: This report was prepared as an account of work sponsored by the United States Government and any agency thereof and by any of their employees, makes any warranty, express or implied, or assumes any legal liability or responsibility for the accuracy, completeness, or usefulness of any information, apparatus, product, or process disclosed, or represents that its use would not infringe privately owned rights. Reference herein to any specific commercial product, process, or service by trade name, trademark, manufacturer, or otherwise does not necessarily constitute or imply its endorsement, recommendation, or favoring by the United States Government or any agency thereof. The views and opinions of authors expressed herein do not necessarily state or reflect those of the United States Government or any agency thereof.

MV-104

CO2 COMPRESSOR 1ST STAGE
INTERSTAGE KNOCK-OUT DRUM

NOTES:

1. FOR STANDARD SYMBOLS, DETAILS AND LEGENDS SEE DRAWINGS M6J-YA-00001 THROUGH M6J-YA-00005
2. ALL LINES, VALVES, EQUIPMENT, AND INSTRUMENT NUMBERS ARE PREFIXED WITH "QG", UNLESS NOTED OTHERWISE.
3. ALL VENTS, DRAINS AND INSTRUMENTATION ROOT VALVES ARE 1" UNLESS NOTED OTHERWISE.
4. 2oo3 LEVEL TRANSMITTERS HHLL WILL TRIP COMPRESSORS AND LLLL WILL CLOSE LV-0746.
5. EQUIPMENT, INSTRUMENTS AND PIPING ASSUMED TO BE INSIDE HEATED BUILDING.
6. CONTROL VALVE AND PSV SIZES TO BE CONFIRMED DURING DETAILED ENGINEERING.
7. GOVERNING CASE FOR PSV AND PSV INLET/OUTLET LINE SIZES TO BE CONFIRMED DURING DETAILED ENGINEERING.
8. ALL VENTS IN CO2 SERVICE SHALL BE HARD PIPED TO VENT HEADER UNLESS A DEPRESSURING ROUTE TO THE VENT SYSTEM IS ALREADY AVAILABLE.
9. VENT AND DRAIN VALVES LOCATED INSIDE BUILDING TO BE ROUTED TO CLOSED SYSTEMS TO AVOID RELEASE WITHIN BUILDING.

CO2 VENT
M6-QG-00010
TO T-101/T-102

1-QG-L666-S1E-24"
NO POCKETS

1-QG-L666-S1E-24"
NO POCKETS

CO2 VENT HEADER
M6-QG-00070

PSET=6.70 BARG
PSV 0910
V164
1-QG-L596-S1E-12"
NO POCKETS
V459
LO
(D)
V736
(V)
1-QG-L671-S1E-10"
1-QG-L599-S1E-10"
LO
V163
LC
V027

PSET=6.70 BARG
PSV 0901
V023
1-QG-L672-S1E-12"
V823
LO
(D)
V710
(V)
LO
V022

14"X 10"

1-QG-L670-S1E-10"

AP 0747
GRAB
V633

FREE DRAINING

1-QG-L557-S1E-18"
CO2
M6-QG-00050
TO MC-103 2ND STAGE

1-QG-L595-S1E-14"

(V)
2"
V709
18"

14"

MV-104

24"
MW

CO2
M6-QG-00030
FROM ME-113

1-QG-L556-S1E-18"
NO POCKETS

24"x18"

24"

PROCESS WATER
M6-QG-00070
FROM MV-105

1-QG-L618-S1E-2"

2"

(V)
V711
V631
2"
LG 0745
V632
2"
V821 (D)
V024
2"
EL. MIN FOR PIPING

(V) (V) (V)
V735 V736 V737
2" V630
2" V629
2" V628
LIT 0746A
LIT 0746B
LIT 0746C
2" V625
2" V626
2" V627
V818 (D)
V819 (D)
V820 (D)

LI 0746A
LI 0746C
LI 0746B
LIC 0746
H
L
ON/OFF
LAHH 0746
(2oo3)
LALL 0746
(NOTE 4)

2"
REMOVABLE SPOOL
2" V822

LC 0746
ZI 0746
V020
LAS V021
FC 1"
V824 (D)
V825 (D)
V160

1-QG-L598-S1E-2"

1-QG-L678-S1E-2"
PROCESS WATER
M6-WP-00010
TO MT-104

NO.	DATE	REVISIONS	BY	CHK	APPR
000	07/24/20	ISSUED FOR INFORMATION	MDP	MJC	MJC/ADB

Owner
U. S. DEPARTMENT OF ENERGY, OFFICE OF FOSSIL ENERGY, NATIONAL ENERGY TECHNOLOGY LABORATORY

Contractor
BECHTEL NATIONAL, INC.

FEED STUDY FOR CARBON CAPTURE PLANT RETROFIT

PIPING & INSTRUMENT DIAGRAM
CO2 COMPRESSOR 1ST STAGE
INTERSTAGE KNOCK-OUT DRUM

Sheet Size 594 X 841 "A1" | Scale N.T.S

JOB NO.	DRAWING NO.	REV.
26301	000-M6-QG-00040	000

Acknowledgment: This material is based upon work supported by the Department of Energy Award Number DE-FE0031648

Disclaimer: This report was prepared as an account of work sponsored by the United States Government. Neither the United States Government nor any agency thereof, nor any of their employees, makes any warranty, express or implied, or assumes any legal liability or responsibility for the accuracy, completeness, or usefulness of any information, apparatus, product, or process disclosed, or represents that its use would not infringe privately owned rights. Reference herein to any specific commercial product, process, or service by trade name, trademark, manufacturer, or otherwise does not necessarily constitute or imply its endorsement, recommendation, or favoring by the United States Government or any agency thereof. The views and opinions of authors expressed herein do not necessarily state or reflect those of the United States Government or any agency thereof.

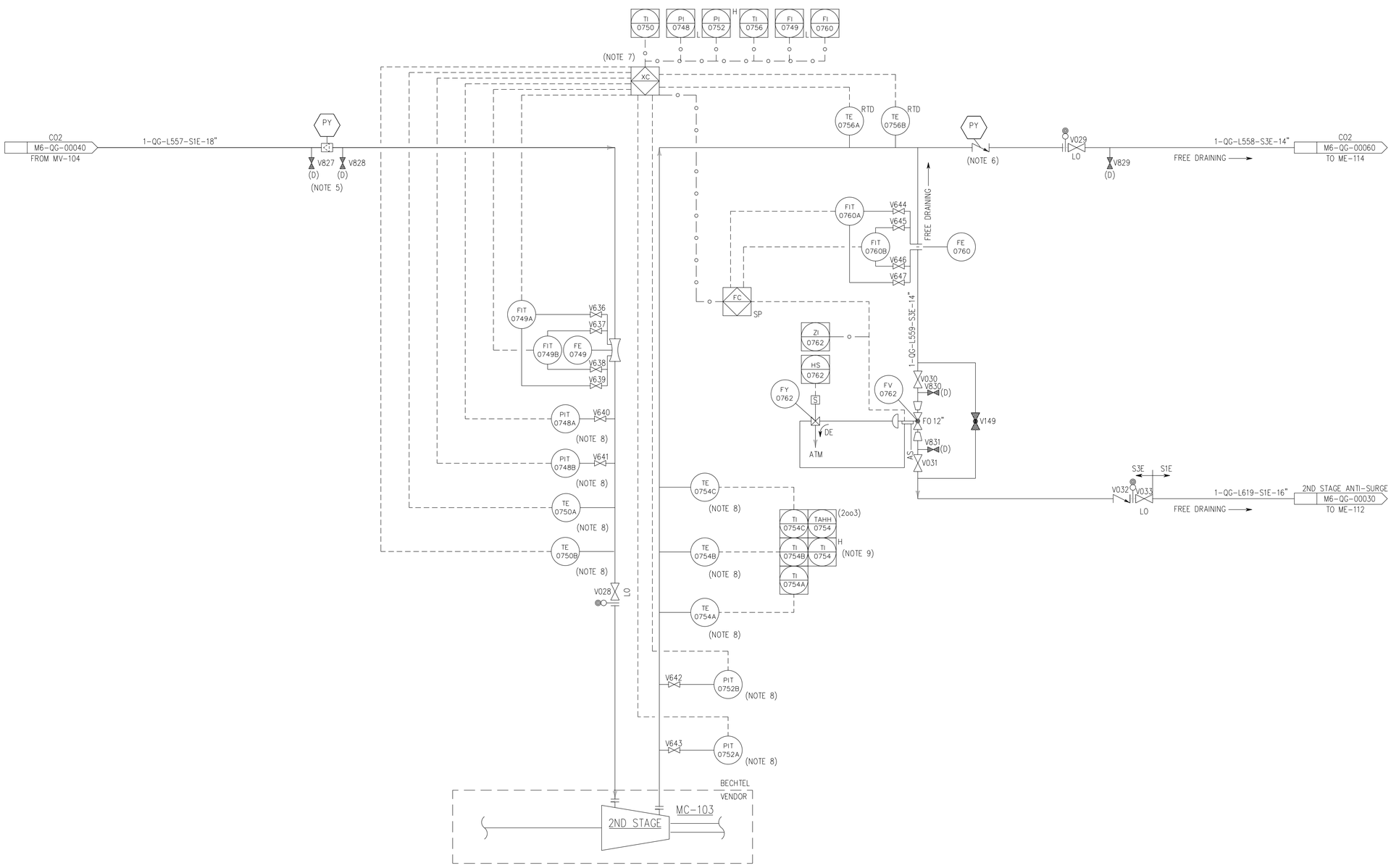

MC-103

CO2 COMPRESSOR (2ND STAGE)

NOTES:

1. FOR STANDARD SYMBOLS, DETAILS AND LEGENDS SEE DRAWINGS M6J-YA-00001 THROUGH M6J-YA-00005
2. ALL LINES, VALVES, EQUIPMENT, AND INSTRUMENT NUMBERS ARE PREFIXED WITH "QG", UNLESS NOTED OTHERWISE.
3. ALL VENTS, DRAINS AND INSTRUMENTATION ROOT VALVES ARE 1" UNLESS NOTED OTHERWISE.
4. EQUIPMENT, INSTRUMENTS AND PIPING ASSUMED TO BE INSIDE HEATED BUILDING.
5. TEMPORARY STRAINER AND PRESSURE TAPPINGS FOR START-UP. STRAINER TO BE REMOVED AFTER START-UP.
6. USE LOW PRESSURE NON-SLAM CHECK VALVE.
7. 2ND STAGE ANTI-SURGE CONTROLLER.
8. PRESSURE AND TEMPERATURE TRANSMITTERS SHOULD BE AS CLOSE AS POSSIBLE TO COMPRESSOR SUCTION/DISCHARGE.
9. 2oo3 HIGH TEMPERATURE SWITCHES, HIGH LEVEL IN SUCTION DRUMS (MV-203, MV-104, MV-105) OR HIGH LEVEL IN CO2 SURGE DRUM (MV-106) WILL TRIP COMPRESSOR
10. CONTROL VALVE SIZES TO BE CONFIRMED DURING DETAILED ENGINEERING.
11. AUXILIARY EQUIPMENT/CONFIGURATION DETAILS TO BE CONFIRMED DURING DETAILED ENGINEERING.
12. COMPRESSOR VENDOR DETAILS, INCLUDING ANTI-SURGE CONTROL SCHEME TO BE FINALISED BASED ON VENDOR INFORMATION DURING DETAILED ENGINEERING.
13. ALL VENTS IN CO2 SERVICE SHALL BE HARD PIPED TO VENT HEADER UNLESS A DEPRESSURING ROUTE TO THE VENT SYSTEM IS ALREADY AVAILABLE.
14. VENT AND DRAIN VALVES LOCATED INSIDE BUILDING TO BE ROUTED TO CLOSED SYSTEMS TO AVOID RELEASE WITHIN BUILDING.

NO.	DATE	REVISIONS	BY	CHK	APPR
000	07/24/20	ISSUED FOR INFORMATION	MDP	MJC	MJC/ ADB

Owner
U.S. DEPARTMENT OF ENERGY, OFFICE OF FOSSIL ENERGY, NATIONAL ENERGY TECHNOLOGY LABORATORY

FEED STUDY FOR CARBON CAPTURE PLANT RETROFIT

Contractor
BECHTEL NATIONAL, INC.

PIPING & INSTRUMENT DIAGRAM
CO2 COMPRESSOR
2ND STAGE

Sheet Size 594 X 841 "A1" Scale N.T.S

JOB NO.	DRAWING NO.	REV.
26301	000-M6-QG-00050	000

Acknowledgment: This material is based upon work supported by the Department of Energy Award Number DE-FE0031648
Disclaimer: This report was prepared as an account of work sponsored by the United States Government. Neither the United States Government nor any agency thereof, nor any of their employees, makes any warranty, express or implied, or assumes any legal liability or responsibility for the accuracy, completeness, or usefulness of any information, apparatus, product, or process disclosed, or represents that its use would not infringe privately owned rights. Reference herein to any specific commercial product, process, or service by trade name, trademark, manufacturer, or otherwise does not necessarily constitute or imply its endorsement, recommendation, or favoring by the United States Government or any agency thereof. The views and opinions of authors expressed herein do not necessarily state or reflect those of the United States Government or any agency thereof.

ME-114
CO2 COMPRESSOR 2ND STAGE STEAM GENERATOR

ME-115
CO2 COMPRESSOR 2ND STAGE INTERCOOLER

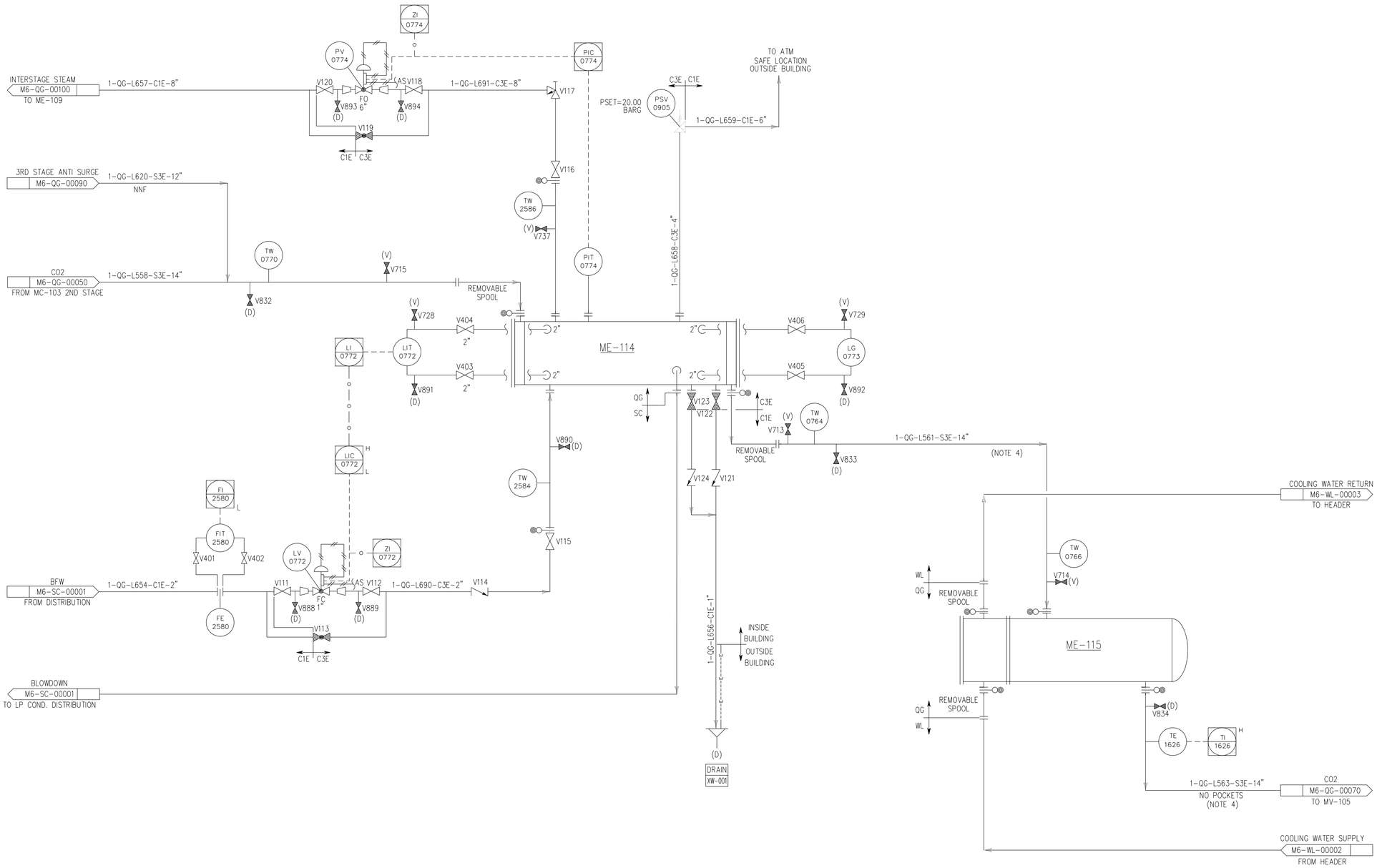

NOTES:

1. FOR STANDARD SYMBOLS, DETAILS AND LEGENDS SEE DRAWINGS M6J-YA-00001 THROUGH M6J-YA-00005
2. ALL LINES, VALVES, EQUIPMENT, AND INSTRUMENT NUMBERS ARE PREFIXED WITH "QG", UNLESS NOTED OTHERWISE.
3. ALL VENTS, DRAINS AND INSTRUMENTATION ROOT VALVES ARE 1" UNLESS NOTED OTHERWISE.
4. TWO PHASE FLOW.
5. EQUIPMENT, INSTRUMENTS AND PIPING ASSUMED TO BE INSIDE HEATED BUILDING.
6. CONTROL VALVE & PSV SIZES TO BE CONFIRMED DURING DETAILED ENGINEERING.
7. GOVERNING CASE FOR PSV AND PSV INLET/OUTLET LINE SIZES TO BE CONFIRMED DURING DETAILED ENGINEERING.
8. ALL VENTS IN CO2 SERVICE SHALL BE HARD PIPED TO VENT HEADER UNLESS A DEPRESSURING ROUTE TO THE VENT SYSTEM IS ALREADY AVAILABLE.
9. VENT AND DRAIN VALVES LOCATED INSIDE BUILDING TO BE ROUTED TO CLOSED SYSTEMS TO AVOID RELEASE WITHIN BUILDING.

NO.	DATE	REVISIONS	BY	CHK	APPR
000	07/24/20	ISSUED FOR INFORMATION	MDP	MJC	MJC/ ADB

Owner
U. S. DEPARTMENT OF ENERGY, OFFICE OF FOSSIL ENERGY, NATIONAL ENERGY TECHNOLOGY LABORATORY

Contractor
BECHTEL NATIONAL, INC.

FEED STUDY FOR CARBON CAPTURE PLANT RETROFIT

PIPING & INSTRUMENT DIAGRAM CO2 COMPRESSOR 2ND STAGE STEAM GENERATOR AND INTERCOOLER

Sheet Size 594 X 841 "A1" | Scale N.T.S

JOB NO.	DRAWING NO.	REV.
26301	000-M6-QG-00060	000

Acknowledgment: This material is based upon work supported by the Department of Energy Award Number DE-FE0031648
Disclaimer: This report was prepared as an account of work sponsored by an agency of the United States Government. Neither the United States Government nor any agency thereof, nor any of their employees, makes any warranty, express or implied, or assumes any legal liability or responsibility for the accuracy, completeness, or usefulness of any information, apparatus, product, or process disclosed, or represents that its use would not infringe privately owned rights. Reference herein to any specific commercial product, process, or service by trade name, trademark, manufacturer, or otherwise does not necessarily constitute or imply its endorsement, recommendation, or favoring by the United States Government or any agency thereof. The views and opinions of authors expressed herein do not necessarily state or reflect those of the United States Government or any agency thereof.

MV-105

CO2 COMPRESSOR 2ND STAGE
INTERSTAGE KNOCK-OUT DRUM

QG CO2 VENT
M6-CN-00040
TO T-101/T-102

1-QG-L666-S1E-24"

1-QG-L666-S1E-24"

CO2 VENT HEADER
M6-QG-00080

PSET=25.90 BARG
PSV 0902
S3E S1E
V056
1-QG-L602-S1E-20"
NO POCKETS
V845 (D)
LO
V721 (V)
1-QG-L601-S1E-12"
LO V055
S3E S1E
LC V054

ESD
XS 0779
ZI 0779
XY 0779
ESD
ZI 0779
ZSC 0779
AS
V
DE
ZSO 0779
XV 0779
FO 0790
6"x4"
V110
LO
S3E S1E
FL
V897 (D)
1-QG-L646-S1E-6"

1-QG-L600-S3E-12"

AP 0777
GRAB
V674
1-QG-L645-S3E-4"

FREE DRAINING

1-QG-L603-S3E-14"

CO2
M6-QG-00080
TO MS-104

(V) 2" V720
14"

MV-105

12"
24" MW

CO2
M6-QG-00070
FROM ME-115

1-QG-L563-S3E-14"
NO POCKETS

18"x14"
18"

(V) V740 (V) V741 (V) V742
2" V671
2" V670
2" V669
LIT 0776A
LIT 0776B
LIT 0776C
LI 0776A
LI 0776C
LI 0776B
LIC 0776
H
ON/OFF
L
LAHH 0776 (2oo3)
LALL 0776 (NOTE 4)
2" V668
2" V667
2" V666
V847 (D)
V848 (D)
V849 (D)

(V) V723
V673 2"
LG 0775
V672 2"
V885 (D)
V060 2"
EL. MIN FOR PIPING

2"
2" V846
REMOVABLE SPOOL

ZI 0776
LV 0776
S3E S1E
CAS
V057
FC 1"
V058
V850 (D)
V851 (D)
V059

1-QG-L604-S3E-2"

1-QG-L618-S1E-2"

PROCESS WATER
M6-QG-00040
TO MV-104

NOTES:

1. FOR STANDARD SYMBOLS, DETAILS AND LEGENDS SEE DRAWINGS M6J-YA-00001 THROUGH M6J-YA-00005
2. ALL LINES, VALVES, EQUIPMENT, AND INSTRUMENT NUMBERS ARE PREFIXED WITH "QG", UNLESS NOTED OTHERWISE.
3. ALL VENTS, DRAINS AND INSTRUMENTATION ROOT VALVES ARE 1" UNLESS NOTED OTHERWISE.
4. 2oo3 LEVEL TRANSMITTERS HHLL WILL TRIP COMPRESSORS AND LLLL WILL CLOSE LV-0776.
5. EQUIPMENT, INSTRUMENTS AND PIPING ASSUMED TO BE INSIDE HEATED BUILDING.
6. CONTROL VALVE AND PSV SIZES TO BE CONFIRMED DURING DETAILED ENGINEERING.
7. GOVERNING CASE FOR PSV AND PSV INLET/OUTLET LINE SIZES TO BE CONFIRMED DURING DETAILED ENGINEERING.
8. ALL VENTS IN CO2 SERVICE SHALL BE HARD PIPED TO VENT HEADER UNLESS A DEPRESSURING ROUTE TO THE VENT SYSTEM IS ALREADY AVAILABLE.
9. FOR FULL DETAILS OF SHUTDOWN LOGIC (ESD) REFER TO 26301-000-J4-JD-00001.
10. VENT AND DRAIN VALVES LOCATED INSIDE BUILDING TO BE ROUTED TO CLOSED SYSTEMS TO AVOID RELEASE WITHIN BUILDING.

NO.	DATE	REVISIONS	BY	CHK	APPR
000	07/24/20	ISSUED FOR INFORMATION	MDP	MJC	MJC/ADB

Owner
U. S. DEPARTMENT OF ENERGY, OFFICE OF FOSSIL ENERGY, NATIONAL ENERGY TECHNOLOGY LABORATORY

Contractor
BECHTEL NATIONAL, INC.

FEED STUDY FOR CARBON CAPTURE PLANT RETROFIT

PIPING & INSTRUMENT DIAGRAM
CO2 COMPRESSOR 2ND STAGE
INTERSTAGE KNOCK-OUT DRUM

Sheet Size 594 X 841 "A1" Scale N.T.S

JOB NO.	DRAWING NO.	REV.
26301	000-M6-QG-00070	000

Acknowledgment: This material is based upon work supported by the Department of Energy Award Number DE-FE0031648
Disclaimer: This report was prepared as an account of work sponsored by an agency of the United States Government. Neither the United States Government nor any agency thereof, nor any of their employees, makes any warranty, express or implied, or assumes any legal liability or responsibility for the accuracy, completeness, or usefulness of any information, apparatus, product, or process disclosed, or represents that its use would not infringe privately owned rights. Reference herein to any specific commercial product, process, or service by trade name, trademark, manufacturer, or otherwise does not necessarily constitute or imply its endorsement, recommendation, or favoring by the United States Government or any agency thereof. The views and opinions of authors expressed herein do not necessarily state or reflect those of the United States Government or any agency thereof.

MS-104

CO2 DRYING PACKAGE

CO2 VENT
M6-QG-00070
TO T-101/T-102

1-QG-L666-S1E-24"

1-QG-L666-S1E-24"

CO2 VENT HEADER
M6-QG-00110

1-QG-L674-S1E-20"

1-QG-L680-S1E-14"

1-QG-L675-S1E-20"

HS 0780D

PDI 0778 H

PDT 0778

V413

(V)

V733

V414

VENDOR BECHTEL

CO2
M6-QG-00070
FROM MV-105

1-QG-L603-S3E-14"

V042

S1E S3E PSET=25.9 BARG

PSV 0907

V454

(D)

HV 0780D

S1E S3E PSET=25.9 BARG

PSV 0908

V190

HS 0780A

HS 0780E

HV 0780A

HV 0780E

HS 0780B

HS 0780C

HV 0780B

HV 0780C

LO V150

LO V151

MS-104

V152

V155

HS 0780F

HS 0780G

HV 0780F

HV 0780G

V153

V154

FO 0788

HS 0780H

HV 0780J

HV 0780H

HS 0780J

V156 V157 V158 V159

V455

(D)

V456

(D)

CO2 COMPRESSOR BLDG
GAS ANALYSIS PANEL

CO2, H2O, AMINE

1-JN AT 1210

H20

1-JN H AI 1210

02

1-JN AT 1212A

1-JN H AI 1212A

PLC

1-JN AT 1212B

1-JN H AI 1212B

SAMPLE UMBILICAL

1-JN EACH ANALYSIS AI

AI 0782A H

DEW PT AT 0782A

PDI 0786 H

AI 0782B H

DEW PT AT 0782B

PDT 0786

(V)

V416

V732

V417

JN QG V675

PI 0784

V415

V043

1-QG-L565-S3E-14"

DRY CO2
M6-QG-00090
TO MC-103
3RD. STAGE

INSIDE BUILDING
OUTSIDE BUILDING

1-QG-L585-S1E-2"

(D)

DRAIN
XW-001

NOTES:

1. FOR STANDARD SYMBOLS, DETAILS AND LEGENDS SEE DRAWINGS M6J-YA-00001 THROUGH M6J-YA-00005
2. ALL LINES, VALVES, EQUIPMENT, AND INSTRUMENT NUMBERS ARE PREFIXED WITH "QG", UNLESS NOTED OTHERWISE.
3. ALL VENTS, DRAINS AND INSTRUMENTATION ROOT VALVES ARE 1" UNLESS NOTED OTHERWISE.
4. EQUIPMENT, INSTRUMENTS AND PIPING ASSUMED TO BE INSIDE HEATED BUILDING.
5. PSV SIZES TO BE CONFIRMED DURING DETAILED ENGINEERING.
6. GOVERNING CASE FOR PSV AND PSV INLET/OUTLET LINE SIZES TO BE CONFIRMED DURING DETAILED ENGINEERING.
7. VENDOR DETAILS TO BE FINALISED BASED ON VENDOR INFORMATION DURING DETAILED ENGINEERING.
8. ALL VENTS IN CO2 SERVICE SHALL BE HARD PIPED TO VENT HEADER UNLESS A DEPRESSURING ROUTE TO THE VENT SYSTEM IS ALREADY AVAILABLE.
9. VENT AND DRAIN VALVES LOCATED INSIDE BUILDING TO BE ROUTED TO CLOSED SYSTEMS TO AVOID RELEASE WITHIN BUILDING.

NO.	DATE	REVISIONS	BY	CHK	APPR
000	07/24/20	ISSUED FOR INFORMATION	MDP	MJC	MJC/ADB

Owner
U. S. DEPARTMENT OF ENERGY, OFFICE OF FOSSIL ENERGY, NATIONAL ENERGY TECHNOLOGY LABORATORY

Contractor
BECHTEL NATIONAL, INC.

FEED STUDY FOR CARBON CAPTURE PLANT RETROFIT

PIPING & INSTRUMENT DIAGRAM CO2 DRYING PACKAGE

Sheet Size 594 X 841 "A1" | Scale N.T.S

JOB NO.	DRAWING NO.	REV.
26301	000-M6-QG-00080	000

Acknowledgment: This material is based upon work supported by the Department of Energy Award Number DE-FE0031648
Disclaimer: This report was prepared as an account of work sponsored by the United States Government. Neither the United States Government nor any agency thereof, nor any of their employees, makes any warranty, express or implied, or assumes any legal liability or responsibility for the accuracy, completeness, or usefulness of any information, apparatus, product, or process disclosed, or represents that its use would not infringe privately owned rights. Reference herein to any specific commercial product, process, or service by trade name, trademark, manufacturer, or otherwise does not necessarily constitute or imply its endorsement, recommendation, or favoring by the United States Government or any agency thereof. The views and opinions of authors expressed herein do not necessarily state or reflect those of the United States Government or any agency thereof.

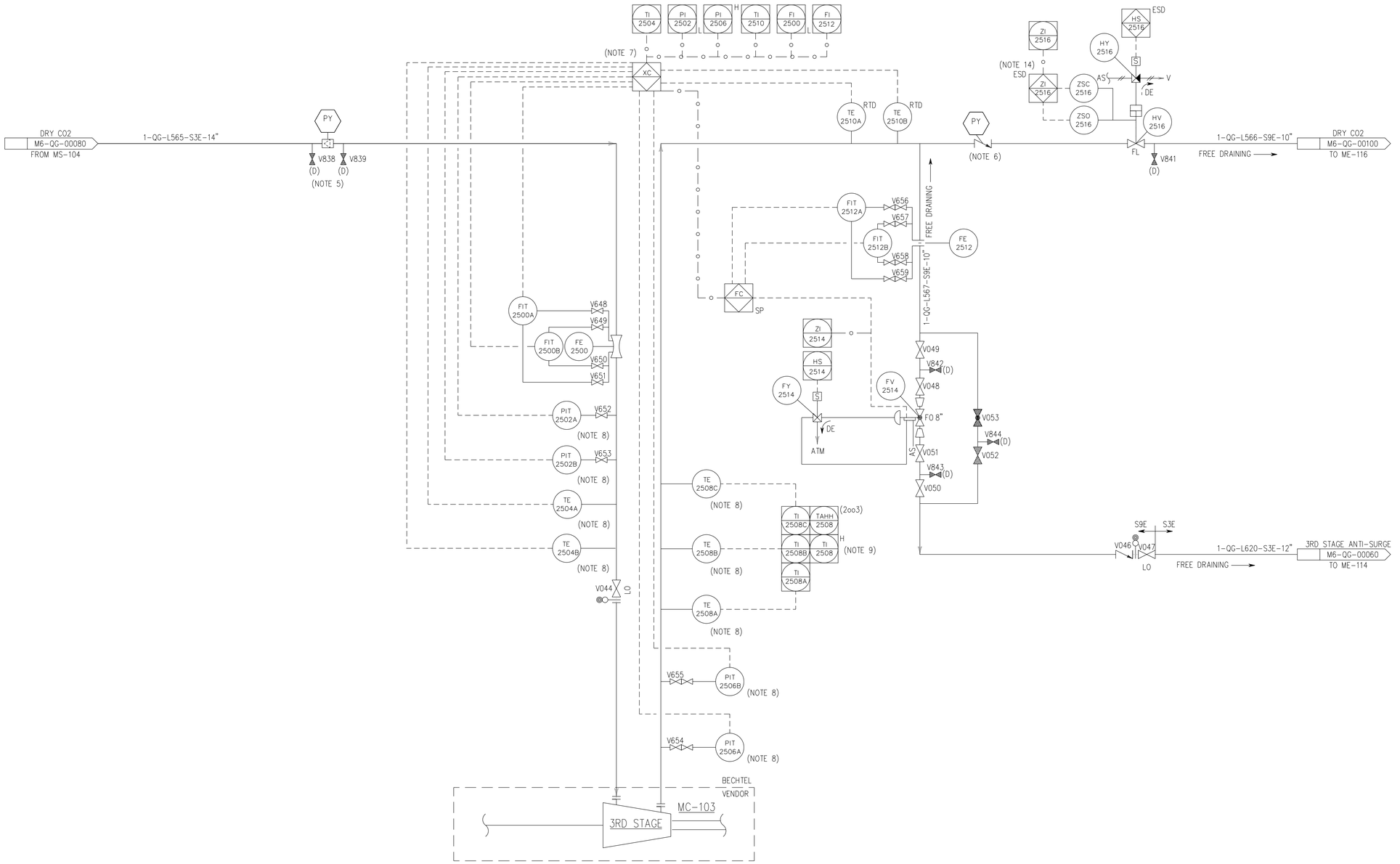

MC-103
CO2 COMPRESSOR (3RD STAGE)

NOTES:

1. FOR STANDARD SYMBOLS, DETAILS AND LEGENDS SEE DRAWINGS M6J-YA-00001 THROUGH M6J-YA-00005
2. ALL LINES, VALVES, EQUIPMENT, AND INSTRUMENT NUMBERS ARE PREFIXED WITH "QG", UNLESS NOTED OTHERWISE.
3. ALL VENTS, DRAINS AND INSTRUMENTATION ROOT VALVES ARE 1" UNLESS NOTED OTHERWISE.
4. EQUIPMENT, INSTRUMENTS AND PIPING ASSUMED TO BE INSIDE HEATED BUILDING.
5. TEMPORARY STRAINER AND PRESSURE TAPPINGS FOR START-UP. STRAINER TO BE REMOVED AFTER START-UP.
6. USE LOW PRESSURE NON-SLAM CHECK VALVE.
7. 3RD STAGE ANTI-SURGE CONTROLLER.
8. PRESSURE AND TEMPERATURE TRANSMITTERS SHOULD BE AS CLOSE AS POSSIBLE TO COMPRESSOR SUCTION/DISCHARGE.
9. 2oo3 HIGH TEMPERATURE SWITCHES, HIGH LEVEL IN SUCTION DRUMS (MV-203, MV-104, MV-105) OR HIGH LEVEL IN CO2 SURGE DRUM (MV-106) WILL TRIP COMPRESSOR
10. CONTROL VALVE SIZES TO BE CONFIRMED DURING DETAILED ENGINEERING.
11. AUXILIARY EQUIPMENT/CONFIGURATION DETAILS TO BE CONFIRMED DURING DETAILED ENGINEERING.
12. COMPRESSOR VENDOR DETAILS, INCLUDING ANTI-SURGE CONTROL SCHEME TO BE FINALISED BASED ON VENDOR INFORMATION DURING DETAILED ENGINEERING.
13. ALL VENTS/DRAINS IN CO2 SERVICE SHALL BE HARD PIPED TO VENT HEADER UNLESS A DEPRESSURING ROUTE TO THE VENT SYSTEM IS ALREADY AVAILABLE.
14. FOR FULL DETAILS OF SHUTDOWN LOGIC (ESD) REFER TO 26301-000-J4-JD-00001.
15. VENT AND DRAIN VALVES LOCATED INSIDE BUILDING TO BE ROUTED TO CLOSED SYSTEMS TO AVOID RELEASE WITHIN BUILDING.

NO.	DATE	REVISIONS	BY	CHK	APPR
000	07/24/20	ISSUED FOR INFORMATION	MDP	MJC	MJC/ADB

Owner
U. S. DEPARTMENT OF ENERGY, OFFICE OF FOSSIL ENERGY, NATIONAL ENERGY TECHNOLOGY LABORATORY

Contractor
BECHTEL NATIONAL, INC.

FEED STUDY FOR CARBON CAPTURE PLANT RETROFIT

PIPING & INSTRUMENT DIAGRAM
CO2 COMPRESSOR
3RD STAGE

Sheet Size	Scale
594 X 841 "A1"	N.T.S

JOB NO.	DRAWING NO.	REV.
26301	000-M6-QG-00090	000

Acknowledgment: This material is based upon work supported by the Department of Energy Award Number DE-FE0031648
Disclaimer: This report was prepared as an account of work sponsored by an agency of the United States Government. Neither the United States Government nor any agency thereof, nor any of their employees, makes any warranty, express or implied, or assumes any legal liability or responsibility for the accuracy, completeness, or usefulness of any information, apparatus, product, or process disclosed, or represents that its use would not infringe privately owned rights. Reference herein to any specific commercial product, process, or service by trade name, trademark, manufacturer, or otherwise does not necessarily constitute or imply its endorsement, recommendation, or favoring by the United States Government or any agency thereof. The views and opinions of authors expressed herein do not necessarily state or reflect those of the United States Government or any agency thereof.

ME-116
CO2 COMPRESSOR 3RD STAGE STEAM GENERATOR

ME-117
CO2 COOLER

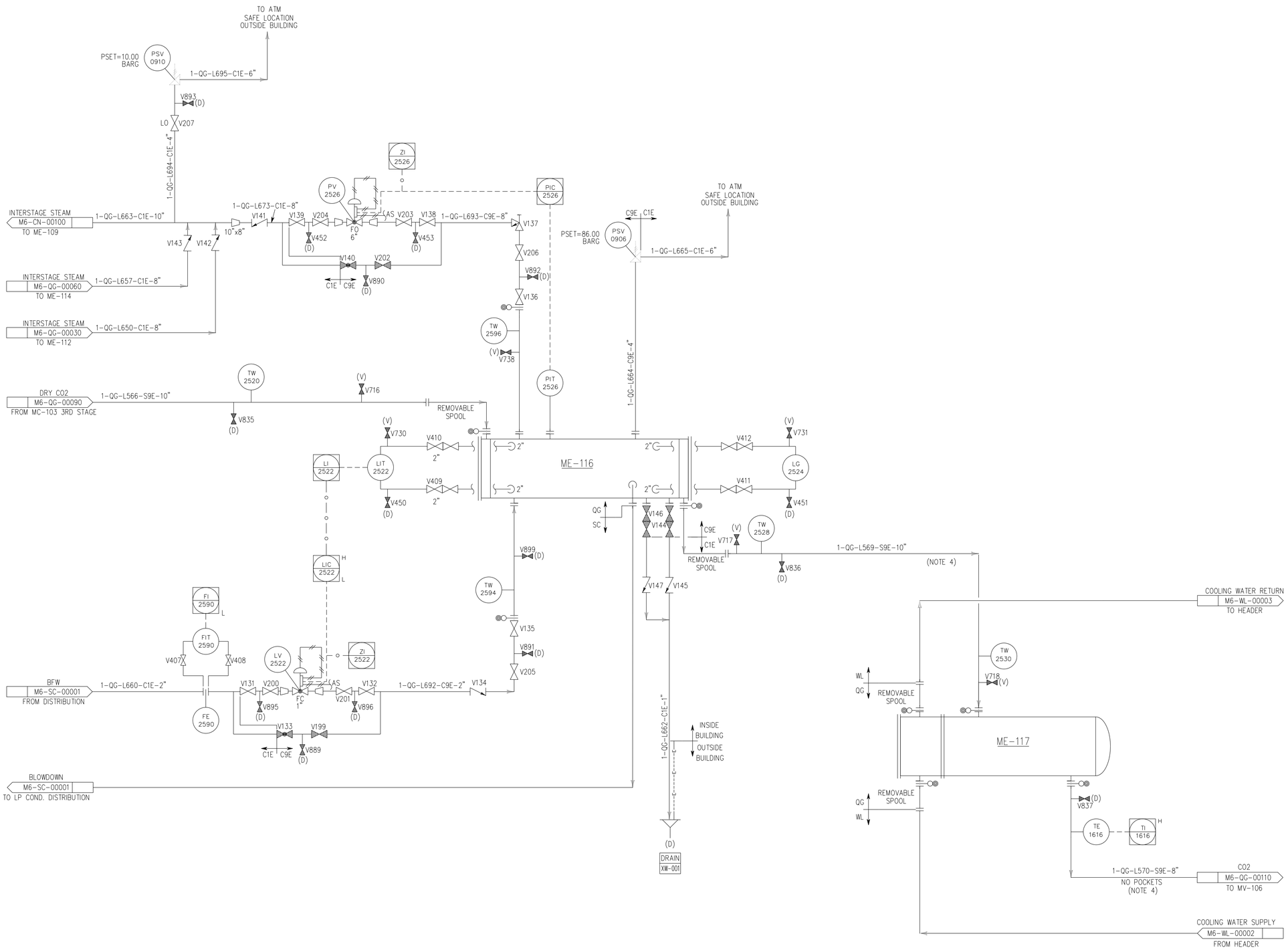

NOTES:

1. FOR STANDARD SYMBOLS, DETAILS AND LEGENDS SEE DRAWINGS M6J-YA-00001 THROUGH M6J-YA-00005
2. ALL LINES, VALVES, EQUIPMENT, AND INSTRUMENT NUMBERS ARE PREFIXED WITH "QG", UNLESS NOTED OTHERWISE.
3. ALL VENTS, DRAINS AND INSTRUMENTATION ROOT VALVES ARE 1" UNLESS NOTED OTHERWISE.
4. TWO PHASE FLOW.
5. EQUIPMENT, INSTRUMENTS AND PIPING ASSUMED TO BE INSIDE HEATED BUILDING.
6. CONTROL VALVE AND PSV SIZES TO BE CONFIRMED DURING DETAILED ENGINEERING.
7. GOVERNING CASE FOR PSV AND PSV INLET/OUTLET LINE SIZES TO BE CONFIRMED DURING DETAILED ENGINEERING.
8. ALL VENTS IN CO2 SERVICE SHALL BE HARD PIPED TO VENT HEADER UNLESS A DEPRESSURING ROUTE TO THE VENT SYSTEM IS ALREADY AVAILABLE.
9. VENT AND DRAIN VALVES LOCATED INSIDE BUILDING TO BE ROUTED TO CLOSED SYSTEMS TO AVOID RELEASE WITHIN BUILDING.

NO.	DATE	REVISIONS	BY	CHK	APPR
000	07/24/20	ISSUED FOR INFORMATION	MDP	MJC	MJC/ADB

Owner
U. S. DEPARTMENT OF ENERGY, OFFICE OF FOSSIL ENERGY, NATIONAL ENERGY TECHNOLOGY LABORATORY

Contractor
BECHTEL NATIONAL, INC.

FEED STUDY FOR CARBON CAPTURE PLANT RETROFIT

PIPING & INSTRUMENT DIAGRAM CO2 COMPRESSOR 3RD STAGE STEAM GENERATOR AND INTERCOOLER

Sheet Size	Scale	
594 X 841 "A1"	N.T.S	
JOB NO.	DRAWING NO.	REV.
26301	000-M6-QG-00100	000

Acknowledgment: This material is based upon work supported by the Department of Energy Award Number DE-FE0031848

Disclaimer: This report was prepared as an account of work sponsored by an agency of the United States Government. Neither the United States Government nor any agency thereof, nor any of their employees, makes any warranty, express or implied, or assumes any legal liability or responsibility for the accuracy, completeness, or usefulness of any information, apparatus, product, or process disclosed, or represents that its use would not infringe privately owned rights. Reference herein to any specific commercial product, process, or service by trade name, trademark, manufacturer, or otherwise does not necessarily constitute or imply its endorsement, recommendation, or favoring by the United States Government or any agency thereof. The views and opinions of authors expressed herein do not necessarily state or reflect those of the United States Government or any agency thereof.

MV-106
CO2 SURGE DRUM

CO2 VENT
M6-QG-00080
TO T-101/T-102

1-QG-L666-S1E-24"

1-QG-L616-S1E-1"

P-108A/B DRAINS
M6-QG-00110

1-QG-L607-S1E-18"
NO POCKETS

PSV 0903
PSET=111.71 BARG
S1E S9E

V100 LO
V852 (D)
V741 (V)
V180 LO
V724 (V)
V098 LO
S1E S9E
LC V099
LC V181
V740 (D)

1-QG-L606-S1E-6"

1-QG-L605-S9E-6"

AP 2544
GRAB
V676
FREE DRAINING

1-QG-L573-S9E-4"

(NOTE 11)
TI 0796
TI 0796 L
TE 0796

ZI 0780
ESD
XS 0780
XY 0780
S
V
DE
ESD
ZI 0780
ZSC 0780
AS
ZSO 0780
(NOTE 13)
XV 0780
FO 0795
FL (NOTE 9)
V898 (D)
6"x4"
1-QG-L685-S9E-6"
S9E S1E
V111 LO

PIC 2546 (NOTE 10)
PIC 2546 L
PIT 2546
V660
PV 2546
ZI 2546
V061
V062
FC 3"
AS
V063
V064
S9E S1E
1-QG-L574-S1E-6"
V853 (D)
V065
V066
V855 (D)

(V) 2" V723
4"

MV-106

24" MW

DRY CO2
M6-QG-00100
FROM ME-117

1-QG-L570-S9E-8"
NO POCKETS
10"
10"x8"

1-QG-L615-S9E-6"
MINIMUM FLOW

6"
V679 (V)
V678 2"
V677 2"
V858 (V)
V860 (V)
V862 (V)
V725 (V)
V662 2"
LG 2540
V661 2"
V856 (D)
V097
LIT 2542A
LIT 2542B
LIT 2542C
LI 2542A
LI 2542C
LI 2542B
LI 2542
V665 2"
V664 2"
V663 2"
(D) V859 (D) V861 (D) V863

EL. 6500mm
(NOTE 14)

12"
REMOVABLE SPOOL
2" V857
12"x10"

1-QG-L579-SLE-8"

V089 V090
(NOTE 6)

CO2
M6-QG-00120
TO ME-118

PIT 2560
PI 2560
V690

1-QG-L609-S9E-10"

1-QG-L591-SLE-8"

1-QG-L571-S9E-10"

V071
V867 (D)
V079
1-QG-L614-SLE-6"
FV 2556A
SLE S9E
V072 V073 AS V075
FO 4"
V074
V868 (D)
V869 (D)
V076 V077
V884 (D)
1-QG-L615-S9E-6"

V088
V873 (D)
V081
1-QG-L641-SLE-6"
FV 2556B
SLE S9E
V082 V083 AS V085
FO 4"
V084
V877 (D)
V876 (D)
V086 V087
V875 (D)
1-QG-L642-S9E-6"

V684
FE 2556A
FIT 2556A
FIC 2556A
L,LL
ZI 2556A
V683
V069
V682
PI 2554A

V689
FE 2556B
FIT 2556B
FIC 2556B
L,LL
ZI 2556B
V688
V078
V687
PI 2554B

S9E S1E
V067
(D) V866
V068
PP 2548A
(NOTE 4)
PY
PP 2550A
V680
V681
1-QG-L611-SLE-10"
HS 2522A
1-QG-L592-SLE-1"
MP-108A
V865
S1E SLE

S9E S1E
V078
(D) V870
V079
PP 2548B
(NOTE 4)
PY
PP 2550B
V685
V686
1-QG-L634-SLE-10"
HS 2522B
1-QG-L593-SLE-1"
MP-108B
V872
S1E SLE

TO CO2 VENT HEADER
M6-QG-00110
1-QG-L616-S1E-1"

1-QG-L617-S1E-1"

MP-108A/B
CO2 COMPRESSOR SENDOUT PUMP

NOTES:

1. FOR STANDARD SYMBOLS, DETAILS AND LEGENDS SEE DRAWINGS M6J-YA-00001 THROUGH M6J-YA-00005
2. ALL LINES, VALVES, EQUIPMENT, AND INSTRUMENT NUMBERS ARE PREFIXED WITH "QG", UNLESS NOTED OTHERWISE.
3. ALL VENTS, DRAINS AND INSTRUMENTATION ROOT VALVES ARE 1" UNLESS NOTED OTHERWISE.
4. START UP STRAINER TO BE REMOVED SUBSEQUENT TO PLANT COMMISSIONING TO BE REPLACED WITH COURSE STRAINER FOR NORMAL OPERATIONS.
5. EQUIPMENT, INSTRUMENTS AND PIPING ASSUMED TO BE INSIDE HEATED BUILDING.
6. TWO DISSIMILAR CHECK VALVES.
7. CONTROL VALVE AND PSV SIZES TO BE CONFIRMED DURING DETAILED ENGINEERING.
8. GOVERNING CASE FOR PSV AND PSV INLET/OUTLET LINE SIZES TO BE CONFIRMED DURING DETAILED ENGINEERING.
9. PRIOR TO DEPRESSURING MV-106 THE CO2 COMPRESSOR (MC-103) SHALL BE ISOLATED AND SHUTDOWN TO LIMIT THE DEPRESSURING INVENTORY.
10. INTERLOCK TO PREVENT SURGE DRUM BEING DEPRESSURED BELOW 9 BARG TO AVOID RISK OF SUBLIMATION.
11. ON LOW-LOW TEMPERATURE, SURGE DRUM TO BE DEPRESSURED WITH COMPRESSOR ISOLATION VALVES (HV-0714/2516) TO BE INHIBITED FROM OPENING.
12. ALL VENTS IN CO2 SERVICE SHALL BE HARD PIPED TO VENT HEADER UNLESS A DEPRESSURING ROUTE TO THE VENT SYSTEM IS ALREADY AVAILABLE.
13. FOR FULL DETAILS OF SHUTDOWN LOGIC (ESD) REFER TO 26301-000-J4-JD-00001.
14. ELEVATION OF MV-106 BASED ON PRELIMINARY HYDRAULICS AND ASSUMED PUMP CENTRE-LINE ELEVATION. VESSEL ELEVATION TO BE CONFIRMED DURING DETAILED ENGINEERING.
15. PUMP SEAL DETAILS TO BE DEVELOPED DURING DETAILED ENGINEERING.
16. PUMPS SHALL TRIP ON HIGH CONCENTRATION OF O2 OR H2O MEASURED ON OUTLET OF MS-104.
17. VENT AND DRAIN VALVES LOCATED INSIDE BUILDING TO BE ROUTED TO CLOSED SYSTEMS TO AVOID RELEASE WITHIN BUILDING.

NO.	DATE	REVISIONS	BY	CHK	APPR
000	07/24/20	ISSUED FOR INFORMATION	MDP	MJC	MJC/ADB

Owner
U. S. DEPARTMENT OF ENERGY, OFFICE OF FOSSIL ENERGY, NATIONAL ENERGY TECHNOLOGY LABORATORY

Contractor
BECHTEL NATIONAL, INC.

FEED STUDY FOR CARBON CAPTURE PLANT RETROFIT

PIPING & INSTRUMENT DIAGRAM
CO2 SURGE DRUM & PRODUCT SEND OUT PUMP

Sheet Size 594 X 841 "A1" | Scale N.T.S

JOB NO.	DRAWING NO.	REV.
26301	000-M6-QG-00110	000

Acknowledgment: This material is based upon work supported by the Department of Energy Award Number DE-FE0031648
Disclaimer: This report was prepared as an account of work sponsored by an agency of the United States Government. Neither the United States Government nor any agency thereof, nor any of their employees, makes any warranty, express or implied, or assumes any legal liability or responsibility for the accuracy, completeness, or usefulness of any information, apparatus, product, or process disclosed, or represents that its use would not infringe privately owned rights. Reference herein to any specific commercial product, process, or service by trade name, trademark, manufacturer, or otherwise does not necessarily constitute or imply its endorsement, recommendation, or favoring by the United States Government or any agency thereof. The views and opinions of authors expressed herein do not necessarily state or reflect those of the United States Government or any agency thereof.

ME-118

CO2 PRODUCT COOLER

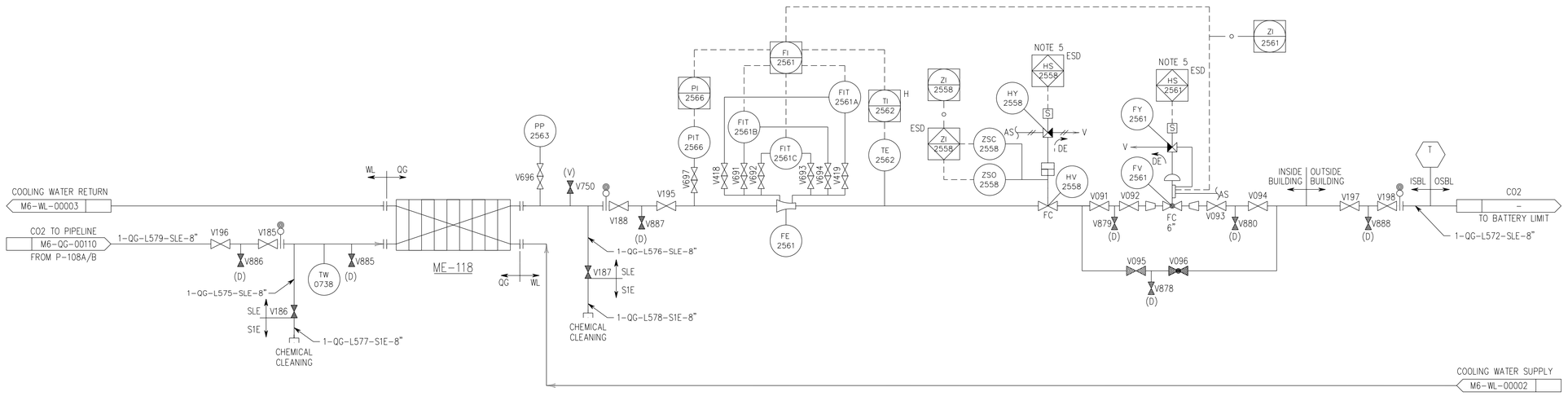

NOTES:

1. FOR SYMBOLS AND LEGENDS SEE DRAWINGS M6J-YA-00001 THROUGH M6J-YA-00005.
2. ALL LINES, VALVES, EQUIPMENT, AND INSTRUMENT NUMBERS ARE PREFIXED WITH "QG", UNLESS NOTED OTHERWISE.
3. ALL VENTS, DRAINS AND INSTRUMENTATION ROOT VALVES ARE 1", UNLESS NOTED OTHERWISE.
4. EQUIPMENT, INSTRUMENTS & PIPING ASSUMED TO BE INSIDE HEATED BUILDING.
5. CONTROL VALVE SIZE TO BE CONFIRMED DURING DETAILED ENGINEERING.
6. FOR FULL DETAILS OF SHUTDOWN LOGIC (ESD) REFER TO 26301-000-J4-JD-00001
7. ALL VENTS IN CO2 SERVICE SHALL BE HARD PIPED TO VENT HEADER UNLESS A DEPRESSURING ROUTE TO THE VENT SYSTEM IS ALREADY AVAILABLE.
8. VENT AND DRAIN VALVES LOCATED INSIDE BUILDING TO BE ROUTED TO CLOSED SYSTEMS TO AVOID RELEASE WITHIN BUILDING.

NO.	DATE	REVISIONS	BY	CHK	APPR
000	07/24/20	ISSUED FOR INFORMATION	MDP	MJC	MJC/ADB

Owner
U. S. DEPARTMENT OF ENERGY, OFFICE OF FOSSIL ENERGY, NATIONAL ENERGY TECHNOLOGY LABORATORY

Contractor
BECHTEL NATIONAL, INC.

FEED STUDY FOR CARBON CAPTURE PLANT RETROFIT

PIPING & INSTRUMENT DIAGRAM
CO2 COOLER AND EXPORT PIPELINE

Sheet Size	Scale	
594 X 841 "A1"	N.T.S	
JOB NO.	DRAWING NO.	REV.
26301	000-M6-QG-00120	000

Acknowledgment: This material is based upon work supported by the Department of Energy Award Number DE-FE0031648.
Disclaimer: This report was prepared as an account of work sponsored by an agency of the United States Government. Neither the United States Government nor any agency thereof, nor any of their employees, makes any warranty, express or implied, or assumes any legal liability or responsibility for the accuracy, completeness, or usefulness of any information, apparatus, product, or process disclosed, or represents that its use would not infringe privately owned rights. Reference herein to any specific commercial product, process, or service by trade name, trademark, manufacturer, or otherwise does not necessarily constitute or imply its endorsement, recommendation, or favoring by the United States Government or any agency thereof. The views and opinions of authors expressed herein do not necessarily state or reflect those of the United States Government or any agency thereof.

LP STEAM DRAIN
M6-AB-00002
1-AB-L051-C1E-1.5"
SLOPE
AB SC

LP STEAM DRAIN
M6-AB-00002
1-AB-L028-C1E-4"
SLOPE
AB SC

MP STEAM DRAIN
M6-AB-00003
1-AB-L067-C1E-1"
SLOPE
AB SC

LP STEAM DRAIN
M6-CN-00180
1-AB-L076-C1E-1"
SLOPE
AB SC

MP CONDENSATE
M6-CN-00180
FROM RECLAIMER MS-102
1-SC-L041-C1E-3"
SLOPE

LP CONDENSATE
FROM REBOILER ME-110G
1-SC-L021-C1E-4"
18"x4"
BALANCE LINE
M6-AB-00002
TO ME-110G/H
1-SC-L040-C1E-4"
V018
V608
LIT 1000G
1-SC-L022-C1E-18"
V607
18"x4"
ZI 1000G
LIC 1000G
LV 1000G
1-SC-L053-C1E-4"

LP CONDENSATE
FROM REBOILER ME-110H
1-SC-L020-C1E-4"
6"x4"
V049
V820 (D)
FC 4"
AS
V816 (D)
V050
1-SC-L025-C1E-6"
SLOPE
(NOTE 5)
1-SC-L026-C1E-6"
V051

LP CONDENSATE
FROM REBOILER ME-110E
1-SC-L016-C1E-4"
18"x4"
BALANCE LINE
M6-AB-00002
TO ME-110E/F
1-SC-L019-C1E-4"
V016
V606
LIT 1000E
1-SC-L052-C1E-18"
V605
18"x4"
ZI 1000E
LIC 1000E
LV 1000E
1-SC-L049-C1E-4"

LP CONDENSATE
FROM REBOILER ME-110F
1-SC-L045-C1E-4"
6"x4"
V046
V821 (D)
FC 4"
AS
V805 (D)
V047
1-SC-L050-C1E-6"
SLOPE
(NOTE 5)
1-SC-L051-C1E-6"
V048

LP CONDENSATE
M6-CN-00150
FROM REBOILER ME-110C
1-SC-L004-C1E-4"
18"x4"
BALANCE LINE
M6-AB-00001
TO ME-110C/D
1-SC-L018-C1E-4"
V014
V602
LIT 1000C
1-SC-L005-C1E-18"
V601
18"x4"
ZI 1000C
LIC 1000C
LV 1000C
1-SC-L046-C1E-4"

LP CONDENSATE
M6-CN-00150
FROM REBOILER ME-110D
1-SC-L003-C1E-4"
6"x4"
V040
V822 (D)
FC 4"
AS
V812 (D)
V041
1-SC-L047-C1E-6"
SLOPE
(NOTE 5)
1-SC-L048-C1E-6"
V042

LP CONDENSATE
M6-CN-00150
FROM REBOILER ME-110A
1-SC-L011-C1E-4"
18"x4"
BALANCE LINE
M6-AB-00001
TO ME-110A/B
1-SC-L017-C1E-4"
V012
V604
LIT 1000A
1-SC-L012-C1E-18"
V603
18"x4"
ZI 1000A
LIC 1000A
LV 1000A
1-SC-L013-C1E-4"

LP CONDENSATE
M6-CN-00150
FROM REBOILER ME-110B
1-SC-L010-C1E-4"
6"x4"
V043
V823 (D)
FC 4"
AS
V804 (D)
V044
1-SC-L014-C1E-6"
SLOPE
(NOTE 5)
1-SC-L009-C1E-6"
V045

LP CONDENSATE
M6-CN-00100
FROM FLASH FEED HEATER ME-109
1-SC-L006-C1E-2"
SLOPE
PY 113
PY 114
T
V004
V822 (D)
V005
1-SC-L007-C1E-2"
V006

1-SC-L037-C1E-10"

GRAB
AP 2575
V651
ME-112 BLOWDOWN
1-SC-L056-C1E-1"
M6-QG-00030
V057 (NOTE 8)

GRAB
AP 2585
V652
ME-114 BLOWDOWN
C1E C3E
1-SC-L058-C3E-1"
M6-QG-00060
V058 (NOTE 8)
2"x1"

GRAB
AP 2595
V653
ME-116 BLOWDOWN
C1E C9E
1-SC-L057-C9E-1"
M6-QG-00100
V085
V059 (NOTE 8)
V835 (D)
1-SC-L055-C1E-2"

COOLING WATER RETURN
M6-WL-00003
TO DISTRIBUTION

PY 120
WL SC
TE 1035
TI 1035
(NOTE 8)
INTERCOOLER BLOWDOWN
1-SC-L072-C1E-2"
M6-WP-00010
TO MT-104

COOLING WATER SUPPLY
M6-WL-00002
FROM DISTRIBUTION

T
ISBL OSBL
1-SC-L027-C1E-3"
BFW FROM OSBL
V015
PY 105
SC QC
ME-112 CO2 COMPRESSOR FIRST STAGE STEAM GENERATOR
1-SC-L028-C1E-2"
1-QG-L653-C1E-2"
M6-QG-00030
V027

SC QC
ME-114 CO2 COMPRESSOR SECOND STAGE STEAM GENERATOR
1-SC-L029-C1E-2"
1-QG-L654-C1E-2"
M6-QG-00060
V026

SC QC
ME-116 CO2 COMPRESSOR THIRD STAGE STEAM GENERATOR
1-SC-L030-C1E-2"
1-QG-L660-C1E-2"
M6-QG-00100
V025

LP STEAM DESUPERHEATER
1-SC-L061-C1E-2.5"
M6-AB-00001

SAMPLING PANEL
1-JN
CONDUCTIVITY
AIT 1200
AI 1200
HH H
(NOTE 6)

PI 1024
PIT 1024
V636
TI 1026
TE 1026
FI 1028
FIT 1028
V637
V638
1/4" SS TUBING
JN
SC
V065
FE 1028
1-SC-L031-C1E-2"
V038
1/4" SS TUBING
TO SAMPLING SYSTEM

1-SC-L039-C1E-10"
V086
T
ISBL OSBL
PY 110
V028
LP CONDENSATE RETURN TO CCPP
V806 (D)
1-SC-L075-C1E-12"
TIC 1040
ZI 1040
1-WL-L175-C1E-10"
QUENCH WATER
M6-WL-00002
FROM COOLING WATER SUPPLY
HS 1045
HY 1045
ZI 1045
ZSO 1045
ZSC 1045
DE
HV 1045
FC
V081
V830 (D)
FC 8"
AS
TV 1040
V831 (D)
V080
V082
SC WL
1-SC-L070-C1E-10"
TE 1040
TI 1040
(D)
DRAIN XW-002

NOTES:
1. FOR SYMBOLS AND LEGENDS SEE DRAWINGS M6J-YA-00001 THROUGH M6J-YA-00005.
2. ALL LINES, VALVES, EQUIPMENT AND INSTRUMENT NUMBERS ARE PREFIXED WITH "SC" UNLESS OTHERWISE NOTED.
3. ALL VENTS, DRAINS AND INSTRUMENTATION ROOT VALVES ARE 1" UNLESS NOTED OTHERWISE.
4. CONTROL VALVE SIZES TO BE CONFIRMED DURING DETAILED ENGINEERING.
5. LINE TO BE SUPPORTED FOR TWO PHASE FLOW.
6. ON HIGH CONDUCTIVITY PLANT TO BE SHUTDOWN, HV-1045 TO OPEN AND TV-1040 TO BE DRIVEN OPEN TO MAINTAIN CONDENSATE TEMPERATURE BELOW MAXIMUM DRAIN DOWN TEMPERATURE DURING SHUTDOWN.
7. REQUIREMENT FOR HEAT TRACING IN NORMALLY FLOWING LINES 3" AND ABOVE TO BE CONFIRMED IN DETAILED ENGINEERING.
8. TI-1035 TO BE VISIBLE FROM MANUAL VALVES (V057/V058/V059) ON BLOWDOWN ROUTES FROM ME-112, ME-114 AND ME-116.

HOLDS:

NO.	DATE	REVISIONS	BY	CHK	APPR
000	07/24/20	ISSUED FOR INFORMATION	MDP	MJC	MJC/ADB

Owner
U. S. DEPARTMENT OF ENERGY, OFFICE OF FOSSIL ENERGY, NATIONAL ENERGY TECHNOLOGY LABORATORY

Contractor
BECHTEL NATIONAL, INC.

FEED STUDY FOR CARBON CAPTURE PLANT RETROFIT

PIPING & INSTRUMENT DIAGRAM
LP STEAM CONDENSATE & BFW SYSTEM

Sheet Size	Scale	
594 X 841 "A1"	N.T.S	
JOB NO.	DRAWING NO.	REV.
26301	000-M6-SC-00001	000

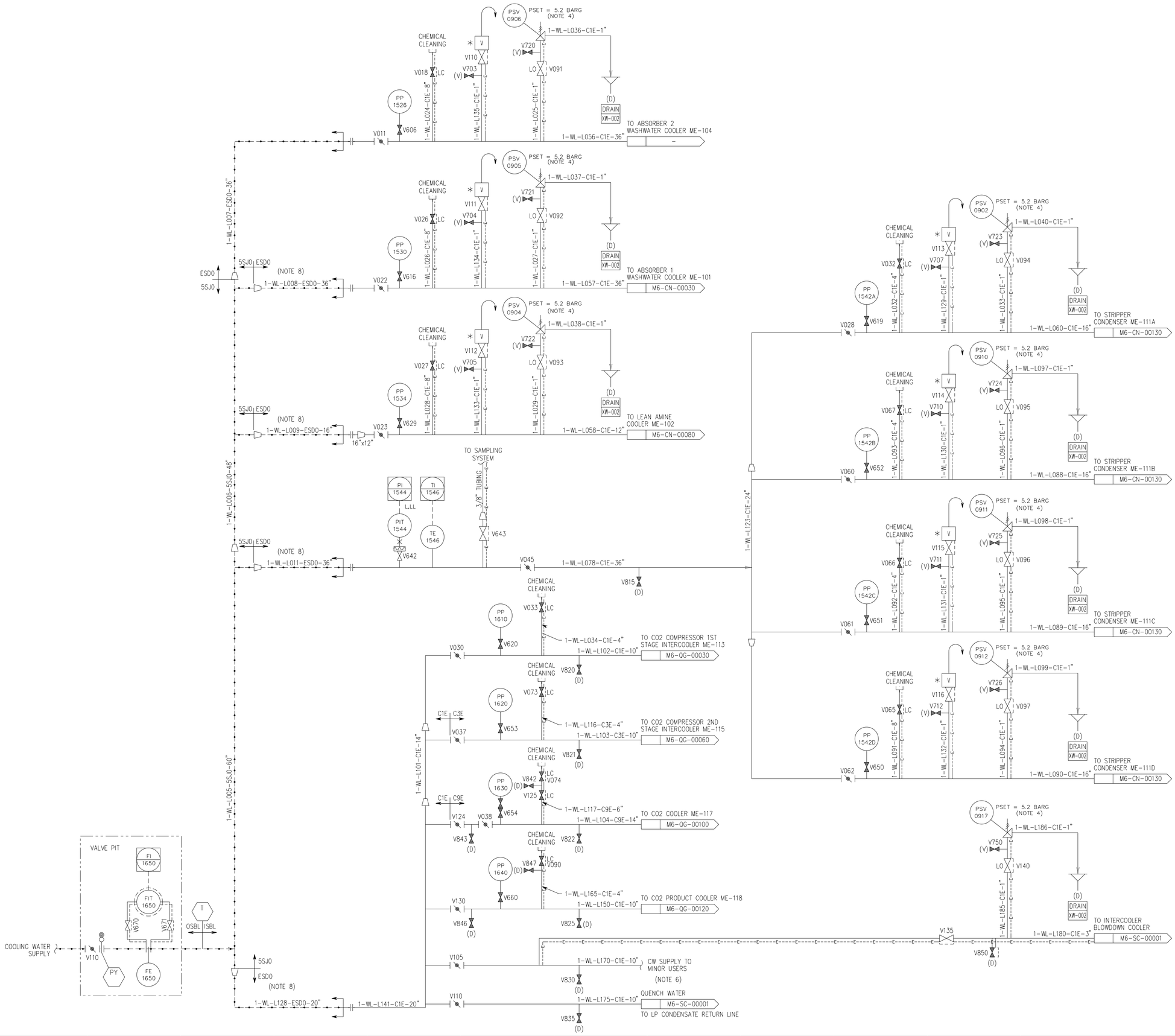

NOTES:

1. FOR SYMBOLS AND LEGENDS SEE DRAWINGS M6J-YA-00001 THROUGH M6J-YA-00005.
2. ALL LINES, VALVES, EQUIPMENT, AND INSTRUMENT NUMBERS ARE PREFIXED WITH "WL", UNLESS NOTED OTHERWISE.
3. ALL VENTS DRAINS AND INSTRUMENTATION ROOT VALVES ARE 1" UNLESS NOTED OTHERWISE.
4. PSV SIZES AND SET PRESSURE TO BE CONFIRMED DURING DETAILED ENGINEERING.
5. GOVERNING CASE FOR PSV AND PSV INLET/OUTLET LINE SIZE TO BE CONFIRMED DURING DETAILED ENGINEERING.
6. MINOR USERS OF COOLING WATER INCLUDE AUXILIARIES/VENDOR PACKAGES (E.G. LUBE OIL). DETAILS AND FLOWRATE REQUIREMENT TO BE CONFIRMED DURING DETAILED ENGINEERING.
7. REQUIREMENT FOR COOLING WATER SUPPLY TO BE UNDERGROUND AND VALVE PIT BY BATTERY LIMIT TO BE CONFIRMED DURING DETAILED ENGINEERING.
8. LOCATION OF METALLURGY TRANSITION TO BE CONFIRMED DURING DETAILED ENGINEERING.

NO.	DATE	REVISIONS	BY	CHK	APPR
000	28/07/20	ISSUED FOR INFORMATION	MDP	MJC	MJC/ ADB

Owner: U. S. DEPARTMENT OF ENERGY, OFFICE OF FOSSIL ENERGY, NATIONAL ENERGY TECHNOLOGY LABORATORY

Contractor: BECHTEL NATIONAL, INC.

FEED STUDY FOR CARBON CAPTURE PLANT RETROFIT

PIPING & INSTRUMENT DIAGRAM
COOLING WATER SUPPLY SYSTEM

Sheet Size	Scale	
594 X 841 "A1"	N.T.S	
JOB NO.	DRAWING NO.	REV.
26301	000-M6-WL-00002	000

Acknowledgment: This material is based upon work supported by the Department of Energy Award Number DE-FE0031648.
Disclaimer: This report was prepared as an account of work sponsored by the United States Government. Neither the United States Government nor any agency thereof, nor any of their employees, makes any warranty, express or implied, or assumes any legal liability or responsibility for the accuracy, completeness, or usefulness of any information, apparatus, product, or process disclosed, or represents that its use would not infringe privately owned rights. Reference herein to any specific commercial product, process, or service by trade name, trademark, manufacturer, or otherwise does not necessarily constitute or imply its endorsement, recommendation, or favoring by the United States Government or any agency thereof. The views and opinions of authors expressed herein do not necessarily state or reflect those of the United States Government or any agency thereof.

Acknowledgment: This material is based upon work supported by the Department of Energy Award Number DE-FE0031648
Disclaimer: This report was prepared as an account of work sponsored by the United States Government. Neither the United States Government nor any agency thereof, nor any of their employees, makes any warranty, express or implied, or assumes any legal liability or responsibility for the accuracy, completeness, or usefulness of any information, apparatus, product, or process disclosed, or represents that its use would not infringe privately owned rights. Reference herein to any specific commercial product, process, or service by trade name, trademark, manufacturer, or otherwise does not necessarily constitute or imply its endorsement, recommendation, or favoring by the United States Government or any agency thereof. The views and opinions of authors expressed herein do not necessarily state or reflect those of the United States Government or any agency thereof.

NOTES:

1. FOR SYMBOLS AND LEGENDS SEE DRAWINGS M6J-YA-00001 THROUGH M6J-YA-00005.
2. ALL LINES, VALVES, EQUIPMENT, AND INSTRUMENT NUMBERS ARE PREFIXED WITH "BA", UNLESS NOTED OTHERWISE.
3. ALL VENTS DRAINS AND INSTRUMENTATIONROOT VALVES ARE 1" UNLESS NOTED OTHERWISE.
4. CONTROL VALVE SIZES TO BE CONFIRMED DURING DETAILED ENGINEERING.
5. ON LOSS OF AIR OR SOLENOID POWER VALVE IS TO FAIL CLOSE. ON LOSS OF SIGNAL TO POSTIONER VALVE FAILS IN LAST POSITION.
6. MINOR USERS OF COOLING WATER INCLUDE AUXILIARIES/VENDOR PACKAGES (E.G. LUBE OIL). DETAILS AND FLOWRATE REQUIREMENT TO BE CONFIRMED DURING DETAILED ENGINEERING.
7. PSV SIZES AND SET PRESSURE TO BE CONFIRMED DURING DETAILED ENGINEERING.
8. GOVERNING CASE FOR PSV AND PSV INLET/OUTLET LINE SIZE TO BE CONFIRMED DURING DETAILED ENGINEERING.
9. LOCATION OF METALLURGY TRANSITION TO BE CONFIRMED DURING DETAILED ENGINEERING.

NO.	DATE	REVISIONS	BY	CHK	APPR
000	08/07/20	ISSUED FOR INFORMATION	MDP	MJC	MJC/ ADB

Owner
U. S. DEPARTMENT OF ENERGY, OFFICE OF FOSSIL ENERGY, NATIONAL ENERGY TECHNOLOGY LABORATORY

FEED STUDY FOR CARBON CAPTURE PLANT RETROFIT

PIPING & INSTRUMENT DIAGRAM COOLING WATER RETURN SYSTEM

Contractor
BECHTEL NATIONAL, INC.

Sheet Size	Scale	JOB NO.	DRAWING NO.	REV.
594 X 841 "A1"	N.T.S	26301	000-M6-WL-00003	000

Acknowledgment: This material is based upon work supported by the Department of Energy Award Number DE-FE0031648
Disclaimer: This report was prepared as an account of work sponsored by an agency of the United States Government. Neither the United States Government nor any agency thereof, nor any of their employees, makes any warranty, express or implied, or assumes any legal liability or responsibility for the accuracy, completeness, or usefulness of any information, apparatus, product, or process disclosed, or represents that its use would not infringe privately owned rights. Reference herein to any specific commercial product, process, or service by trade name, trademark, manufacturer, or otherwise does not necessarily constitute or imply its endorsement, recommendation, or favoring by the United States Government or any agency thereof. The views and opinions of authors expressed herein do not necessarily state or reflect those of the United States Government or any agency thereof.

MT-104

PROCESS WATER SURGE TANK

NOTES:

1. FOR SYMBOLS AND LEGENDS SEE DRAWINGS M6J-YA-00001 THROUGH M6J-YA-00005.
2. ALL LINES, VALVES, EQUIPMENT, AND INSTRUMENT NUMBERS ARE PREFIXED WITH "WP", UNLESS NOTED OTHERWISE.
3. ALL VENTS, DRAINS AND INSTRUMENTATION ROOT VALVES ARE 1", UNLESS NOTED OTHERWISE.
4. EQUIPMENT TO BE HEAT TRACED.
5. PUMP SEAL FLUSHING DETAILS TO BE DEVELOPED IN DETAILED ENGINEERING.
6. STARTUP STRAINER TO BE REMOVED SUBSEQUENT TO PLANT COMISSIONING. TO BE REPLACED BY COARSE STRAINER FOR NORMAL OPERATIONS.
7. CONTROL VALVE SIZE TO BE CONFIRMED DURING DETAILED ENGINEERING.
8. REQUIREMENT FOR HEAT TRACING IN NORMALLY FLOWING LINES 3" AND ABOVE TO BE CONFIRMED IN DETAILED ENGINEERING.

HOLDS:

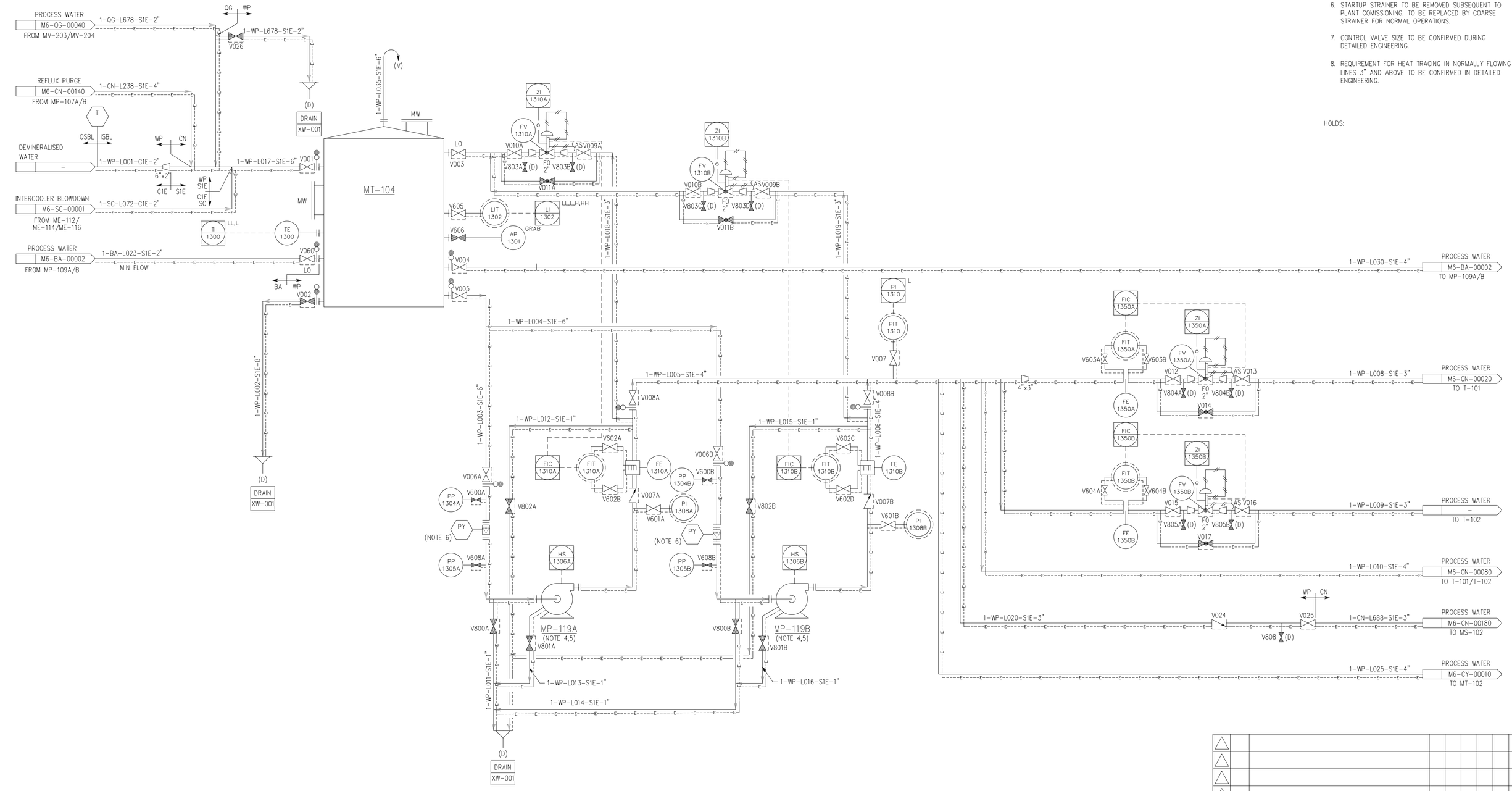

MP-119A/B

ABSORBER MAKEUP WATER PUMP

NO.	DATE	REVISIONS	BY	CHK	APPR
000	07/31/20	ISSUED FOR INFORMATION	MDP	MJC	MJC/ ADB

Owner
U. S. DEPARTMENT OF ENERGY, OFFICE OF FOSSIL ENERGY, NATIONAL ENERGY TECHNOLOGY LABORATORY

Contractor
BECHTEL NATIONAL, INC.

FEED STUDY FOR CARBON CAPTURE PLANT RETROFIT

PIPING & INSTRUMENT DIAGRAM
ABSORBER MAKEUP WATER PUMPS

Sheet Size	Scale	
594 X 841 "A1"	N.T.S	
JOB NO.	DRAWING NO.	REV.
26301	000-M6-WP-00010	000

Acknowledgment: This material is based upon work supported by the Department of Energy Award Number DE-FE0031648
Disclaimer: This report was prepared as an account of work sponsored by an agency of the United States Government. Neither the United States Government nor any agency thereof, nor any of their employees, makes any warranty, express or implied, or assumes any legal liability or responsibility for the accuracy, completeness, or usefulness of any information, apparatus, product, or process disclosed, or represents that its use would not infringe privately owned rights. Reference herein to any specific commercial product, process, or service by trade name, trademark, manufacturer, or otherwise does not necessarily constitute or imply its endorsement, recommendation, or favoring by the United States Government or any agency thereof. The views and opinions of authors expressed herein do not necessarily state or reflect those of the United States Government or any agency thereof.

NOTES:

1. FOR SYMBOLS AND LEGENDS SEE DRAWINGS M6J-YA-00001 THROUGH M6J-YA-00005.
2. ALL LINES, VALVES, EQUIPMENT, AND INSTRUMENT NUMBERS ARE PREFIXED WITH "XW", UNLESS NOTED OTHERWISE.
3. ALL VENTS DRAINS AND INSTRUMENTATION ROOT VALVES ARE 1" UNLESS NOTED OTHERWISE.
4. * SYMBOL INDICATES EQUIPMENT SUPPLIED BY VENDOR.

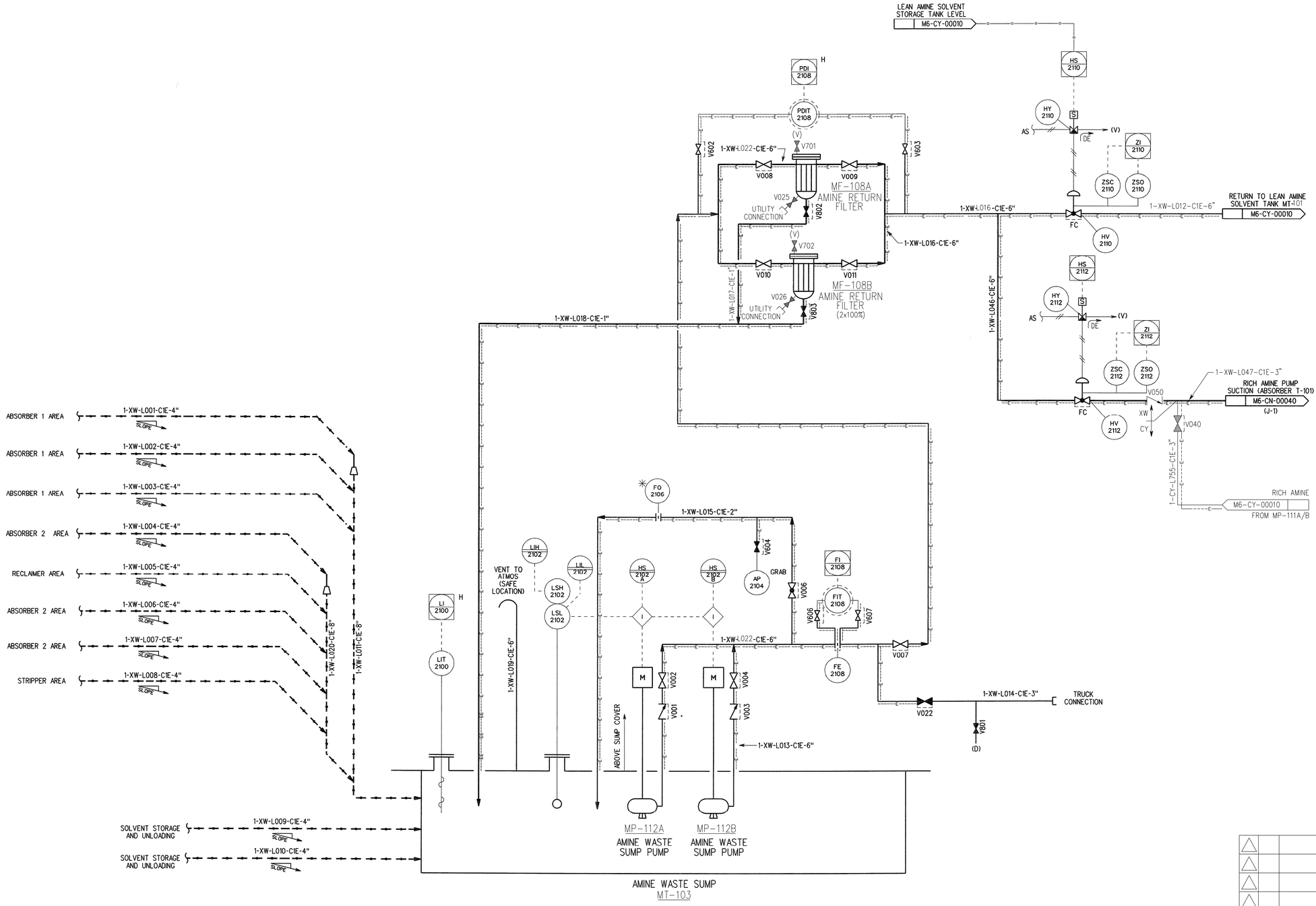

NO.	DATE	REVISIONS	BY	CHK	APPR
000	07/24/20	ISSUED FOR INFORMATION	MDP	MJC	MJC/ ADB

Owner
U. S. DEPARTMENT OF ENERGY, OFFICE OF FOSSIL ENERGY, NATIONAL ENERGY TECHNOLOGY LABORATORY

Contractor
BECHTEL NATIONAL, INC.

FEED STUDY FOR CARBON CAPTURE PLANT RETROFIT

PIPING & INSTRUMENT DIAGRAM AMINE WASTE SYSTEM

Sheet Size	Scale
594 X 841 "A1"	N.T.S

JOB NO.	DRAWING NO.	REV.
26301	000-M6-XW-00001	000

NOTES:

1. FOR SYMBOLS AND LEGENDS SEE DRAWINGS M6J-YA-00001 THROUGH M6J-YA-00005.
2. ALL LINES, VALVES, EQUIPMENT, AND INSTRUMENT NUMBERS ARE PREFIXED WITH "XW", UNLESS NOTED OTHERWISE.
3. ALL VENTS DRAINS AND INSTRUMENTATION ROOT VALVES ARE 1" UNLESS NOTED OTHERWISE.
4. * SYMBOL INDICATES EQUIPMENT SUPPLIED BY VENDOR.
5. SANITARY WASTE TO BE TRANSFERRED TO MUNICIPAL WASTE SYSTEM VIA A CONNECTION TO THE EXISTING OSBL INFRASTRUCTURE.
6. TYPICAL DETAILS PROVIDED FOR OIL/WATER INTERCEPTOR AND SANITARY WATER SYSTEM. FULL DETAILS TO BE DEVELOPED IN DETAILED ENGINEERING.

Acknowledgment: This material is based upon work supported by the Department of Energy Award Number DE-FE0031848
Disclaimer: This report was prepared as an account of work sponsored by an agency of the United States Government. Neither the United States Government nor any agency thereof, nor any of their employees, makes any warranty, express or implied, or assumes any legal liability or responsibility for the accuracy, completeness, or usefulness of any information, apparatus, product, or process disclosed, or represents that its use would not infringe privately owned rights. Reference herein to any specific commercial product, process, or service by trade name, trademark, manufacturer, or otherwise does not necessarily constitute or imply its endorsement, recommendation, or favoring by the United States Government or any agency thereof. The views and opinions of authors expressed herein do not necessarily state or reflect those of the United States Government or any agency thereof.

LAH 2158
LSH 2158
OIL RESERVOIR
1-XW-L043-C1E-3"
OIL/WATER INTERCEPTOR
(NOTE 6)
AP 2120
GRAB
V620
VALVE PIT (BY BECHTEL)
T
ISBL | OSBL
1-XW-L044-FSE-12"
TO ZLD WATER TREATMEMT SYSTEM

SANITARY WASTE FROM CONTROL BUILDING AND LABORATORY
SANITARY WASTE CLEANOUT
1-XW-L050-ESO-4"
1-XW-L051-ESO-4"
1-XW-L052-ESO-4"
SLOPE
(NOTE 6)
T
ISBL | OSBL
TO CCPP SANITARY WASTE SYSTEM
(NOTE 5)

ABSORBER 1 AREA — 1-XW-L025-C1E-4" SLOPE
ABSORBER 1 AREA — 1-XW-L026-C1E-4" SLOPE
ABSORBER 2 AREA — 1-XW-L027-C1E-4" SLOPE
RFCLAIMER AREA — 1-XW-L028-C1E-4" SLOPE
ABSORBER 2 AREA — 1-XW-L029-C1E-4" SLOPE
STRIPPER AREA — 1-XW-L030-C1E-4" SLOPE
1-XW-L038-C1E-6"
1-XW-L037-C1E-6"
CO2 COMPRESSOR AREA — 1-XW-L031-C1E-4" SLOPE
CO2 COMPRESSOR AREA — 1-XW-L032-C1E-4" SLOPE
CO2 COMPRESSOR AREA — 1-XW-L033-C1E-4" SLOPE
CO2 COMPRESSOR AREA — 1-XW-L034-C1E-4" SLOPE
LABORATORY — 1-XW-L035-C1E-4" SLOPE
CONTROL AND OFFICE — 1-XW-L036-C1E-4" SLOPE

FO 2156
1-XW-L042-C1E-2"
V605
GRAB
AP 2154
V017
FI 2118
FIT 2118
V508
V509
FE 2118
1-XW-L039-C1E-3"
1-XW-L043-C1E-3"
V018
1-XW-L041-C1E-3"
TRUCK CONNECTION
V016
V804
(D)
LIH 2152
LIL 2152
VENT TO ATMOS (SAFE LOCATION)
LSH 2152
LSL 2152
HS 2152 A
HS 2152 B
LI 2150
H
LIT 2150
1-XW-L045-C1E-6"
ABOVE SUMP COVER
M
V013
V012
V015
V014
1-XW-L055-C1E-3"
MP-113A
WASTE WATER FORWARDING PUMP
MP-113B
WASTE WATER FORWARDING PUMP
WASTE WATER SUMP

NO.	DATE	REVISIONS	BY	CHK	APPR
000	07/24/20	ISSUED FOR INFORMATION	MDP	MJC	MJC/ADB

Owner
U. S. DEPARTMENT OF ENERGY, OFFICE OF FOSSIL ENERGY, NATIONAL ENERGY TECHNOLOGY LABORATORY

FEED STUDY FOR CARBON CAPTURE PLANT RETROFIT

PIPING & INSTRUMENT DIAGRAM
WASTE WATER SYSTEM

Contractor
BECHTEL NATIONAL, INC.

Sheet Size 594 X 841 "A1" | Scale N.T.S

JOB NO.	DRAWING NO.	REV.
26301	000-M6-XW-00002	000

Acknowledgment: This material is based upon work supported by the Department of Energy Award Number DE-FE0031648
Disclaimer: This report was prepared as an account of work sponsored by an agency of the United States Government. Neither the United States Government nor any agency thereof, nor any of their employees, makes any warranty, express or implied, or assumes any legal liability or responsibility for the accuracy, completeness, or usefulness of any information, apparatus, product, or process disclosed, or represents that its use would not infringe privately owned rights. Reference herein to any specific commercial product, process, or service by trade name, trademark, manufacturer, or otherwise does not necessarily constitute or imply its endorsement, recommendation, or favoring by the United States Government or any agency thereof. The views and opinions of authors expressed herein do not necessarily state or reflect those of the United States Government or any agency thereof.

NOTES:

1. FOR SYMBOLS AND LEGENDS SEE DRAWINGS M6J-YA-00001 THROUGH M6J-YA-00005.
2. ALL LINES, VALVES, EQUIPMENT, AND INSTRUMENT NUMBERS ARE PREFIXED WITH "XW", UNLESS NOTED OTHERWISE.
3. ALL VENTS DRAINS AND INSTRUMENTATION ROOT VALVES ARE 1" UNLESS NOTED OTHERWISE.
4. * SYMBOL INDICATES EQUIPMENT SUPPLIED BY VENDOR.
5. SUMP TO LOCATED CLOSE TO COOLING WATER BLOWDOWN TANK WITHIN OSBL.

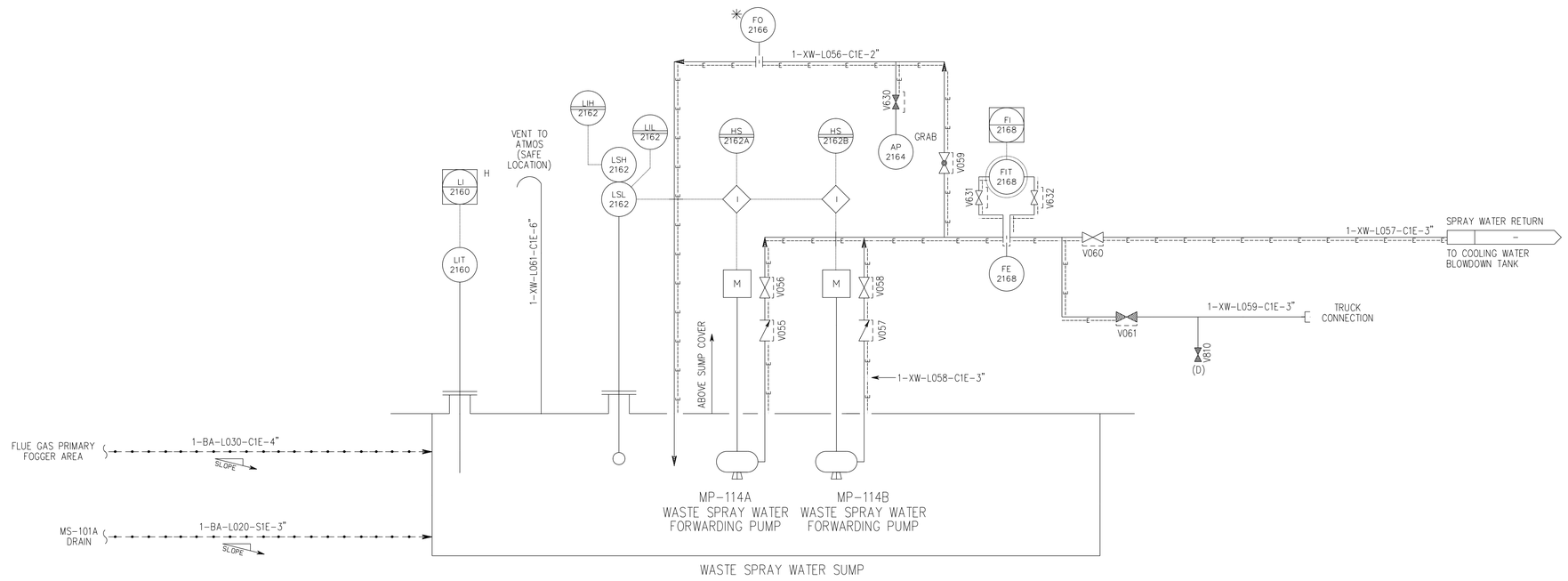

NO.	DATE	REVISIONS	BY	CHK	APPR
000	08/07/20	ISSUED FOR INFORMATION	MDP	MJC	MJC/ADB

Owner
U. S. DEPARTMENT OF ENERGY, OFFICE OF FOSSIL ENERGY, NATIONAL ENERGY TECHNOLOGY LABORATORY

Contractor
BECHTEL NATIONAL, INC.

FEED STUDY FOR CARBON CAPTURE PLANT RETROFIT

PIPING & INSTRUMENT DIAGRAM
WASTE SPRAY WATER SYSTEM

Sheet Size 594 X 841 "A1" | Scale N.T.S

JOB NO.	DRAWING NO.	REV.
26301		

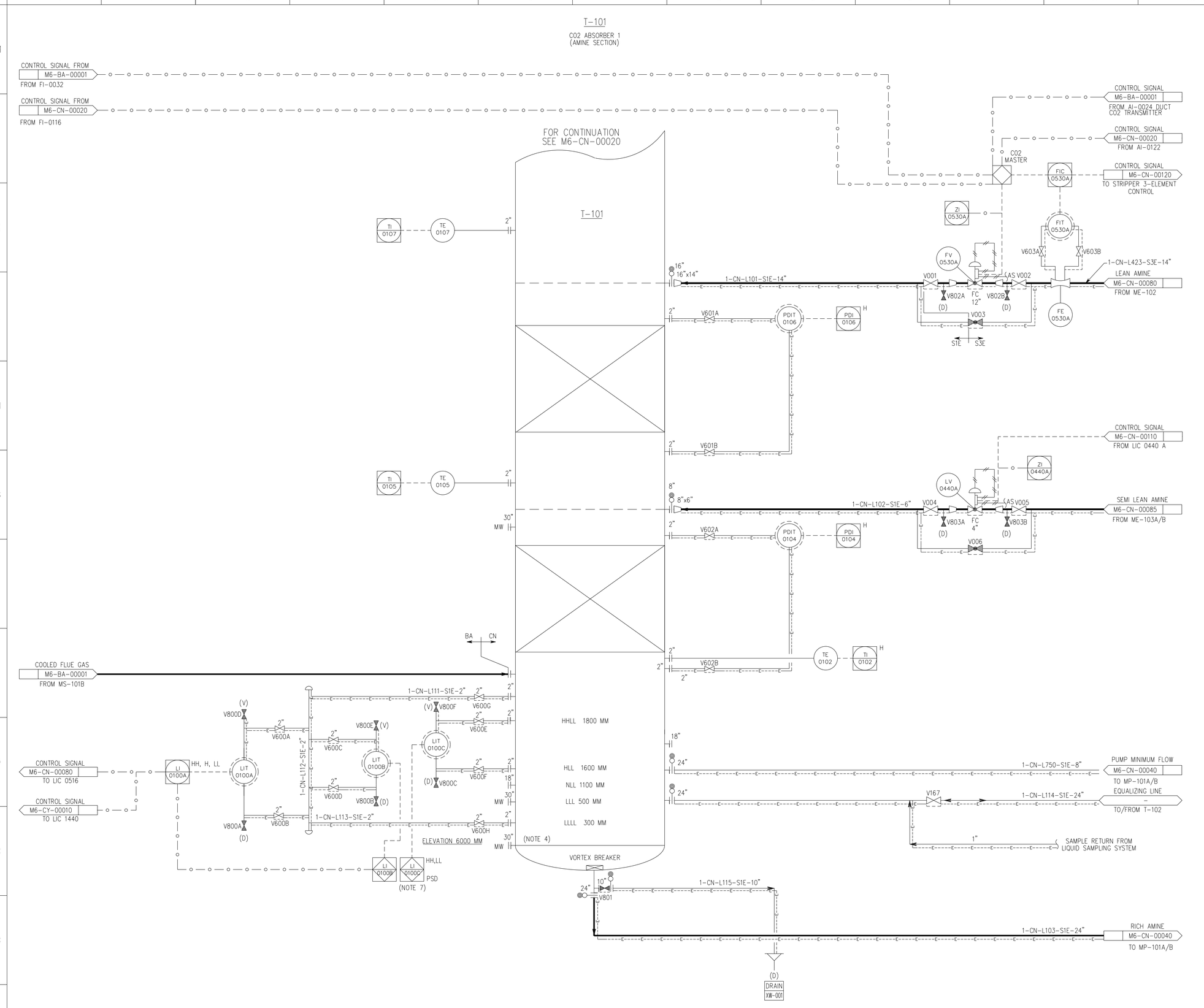

NOTES:

1. FOR SYMBOLS AND LEGENDS SEE DRAWINGS M6J-YA-00001 THROUGH M6J-YA-00005.
2. ALL LINES, VALVES, EQUIPMENT, AND INSTRUMENT NUMBERS ARE PREFIXED WITH "CN", UNLESS NOTED OTHERWISE.
3. ALL VENTS, DRAINS AND INSTRUMENTATION ROOT VALVES ARE 1", UNLESS NOTED OTHERWISE.
4. HEAT TRACE BOTTOM OF ABSORBER COLUMN UP TO THE HIGH-HIGH LIQUID LEVEL.
5. CONTROL VALVE SIZES TO BE CONFIRMED DURING DETAILED ENGINEERING.
6. FACILITY CONSISTS OF TWO ABSORPTION TRAINS - DESIGN OF BOTH TRAINS IS TO BE IDENTICAL,WITH THE 2ND TRAIN DRAWINGS TO BE DEVELOPED DURING DETAILED ENGINEERING.
7. FOR FULL DETAILS OF SHUTDOWN LOGIC (PSD) REFER TO 26301-000-J4-JD-00001.
8. ALL DRAINS IN AMINE SERVICE SHALL BE ROUTED TO OPEN TUNDISH CONNECTED TO AMINE SUMP SYSTEM. DRAINIING TO SUMP SHALL ONLY OCCUR ONCE SYSTEM IS DEPRESSURED.

NO.	DATE	REVISIONS	BY	CHK	APPR
000	07/23/20	ISSUED FOR INFORMATION	MDP	MJC	MJC/ADB

Owner

U. S. DEPARTMENT OF ENERGY, OFFICE OF FOSSIL ENERGY, NATIONAL ENERGY TECHNOLOGY LABORATORY

FEED STUDY FOR CARBON CAPTURE PLANT RETROFIT

Contractor

BECHTEL NATIONAL, INC.

PIPING & INSTRUMENT DIAGRAM
CO2 ABSORBER T-101
(AMINE SECTION)

Sheet Size 594 X 841 "A1" Scale N.T.S

JOB NO.	DRAWING NO.	REV.
26301	000-M6-CN-00010	000

Acknowledgment: This material is based upon work supported by the Department of Energy Award Number DE-FE0031848
Disclaimer: This report was prepared as an account of work sponsored by an agency of the United States Government. Neither the United States Government nor any agency thereof, nor any of their employees, makes any warranty, express or implied, or assumes any legal liability or responsibility for the accuracy, completeness, or usefulness of any information, apparatus, product, or process disclosed, or represents that its use would not infringe privately owned rights. Reference herein to any specific commercial product, process, or service by trade name, trademark, manufacturer, or otherwise does not necessarily constitute or imply its endorsement, recommendation, or favoring by the United States Government or any agency thereof. The views and opinions of authors expressed herein do not necessarily state or reflect those of the United States Government or any agency thereof.

Acknowledgment: This material is based upon work supported by the Department of Energy Award Number DE-FE0031648
Disclaimer: This report was prepared as an account of work sponsored by an agency of the United States Government. Neither the United States Government nor any agency thereof, nor any of their employees, makes any warranty, express or implied, or assumes any legal liability or responsibility for the accuracy, completeness, or usefulness of any information, apparatus, product, or process disclosed, or represents that its use would not infringe privately owned rights. Reference herein to any specific commercial product, process, or service by trade name, trademark, manufacturer, or otherwise does not necessarily constitute or imply its endorsement, recommendation, or favoring by the United States Government or any agency thereof. The views and opinions of authors expressed herein do not necessarily state or reflect those of the United States Government or any agency thereof.

ME-101
WASH WATER COOLER
(ABSORBER 1)

PSET = 9.1 BARG
PSV 0900
1-CN-L339-S1E-3/4"
LO
V015
V810 (D)
V704 (V)
LO
V014
1-WP-L263-S1E-1"
(D)
DRAIN XW-001
TI 0166 L,H
TE 0166
PP 0164
V611
(V) V703
WL CN
COOLING WATER RETURN
M6-WL-00003
V013
V809 (D)
TW 0162
V027
1-CN-L262-S1E-8"
CHEMICAL CLEANING
ME-101
CN WL
V028
1-CN-L269-S1E-8"
CHEMICAL CLEANING
V016
FI 0168
FIC 0168
FIT 0168
V612A
V612B
FV 0170
ZI 0170
V017
V811A (D)
FO 14"
AS V018
V811B (D)
1-CN-L107-S1E-16"
WASH WATER
M6-CN-00020
TO T-101
FE 0168
V019
SAMPLING PANEL
1-JA MEA
AIT
1-JA
AI
V023
1/4" SS TUBING
CN JA
COOLING WATER SUPPLY
M6-WL-00002
1-CN-L222-S1E-16"
LEVEL SIGNAL
M6-CN-00020
FROM LIC-0110A
LV 0160
ZI 0160
V024
V813A (D)
FC 4
AS V025
V813B (D)
1-CN-L226-S1E-6"
EXCESS WATER
M6-CN-00080
TO T-101/T-102
V026
V610
PIT 0158
PI 0158
1-CN-L223-S1E-16"
V009A
V009B
1-CN-L221-S1E-24"
1-CN-L274-S1E-1"
V008A
(V) V702A
V008B
(V) V702B
PP 0151A
PP 0150A
PY
HS 0152A
V807A
V686A
V607A
V608A
PI 0154A
V807B
V686B
V607B
V608B
PI 0154B
PP 0151B
PP 0150B
PY
HS 0152B
HOT WASH WATER
M6-CN-00020
FROM T-101
1-CN-L106-S1E-24"
V007A
(NOTE 6)
V805A
MP-102A
(NOTE 4, 5)
V806A
V007B
(NOTE 6)
V805B
MP-102B
(NOTE 4, 5)
V806B
1-CN-L270-S1E-1"
1-CN-L272-S1E-1"
1-CN-L273-S1E-1"
1-CN-L275-S1E-1"
1-CN-L326-S1E-1"
(D)
DRAIN XW-001

MP-102A/B
WASH WATER
RECIRCULATION PUMPS
(ABSORBER 1)

NOTES:
1. FOR SYMBOLS AND LEGENDS SEE DRAWINGS M6J-YA-00001 THROUGH M6J-YA-00005.
2. ALL LINES, VALVES, EQUIPMENT, AND INSTRUMENT NUMBERS ARE PREFIXED WITH "CN", UNLESS NOTED OTHERWISE.
3. ALL VENTS, DRAINS AND INSTRUMENTATION ROOT VALVES ARE 1", UNLESS NOTED OTHERWISE.
4. EQUIPMENT TO BE HEAT TRACED.
5. PUMP SEAL FLUSHING – DETAILS TO BE PREPARED LATER.
6. START-UP STRAINER TO BE REMOVED SUBSEQUENT TO PLANT COMMISSIONING. TO BE REPLACED WITH COARSE STRAINER FOR NORMAL OPERATION.
7. CONTROL VALVE AND PSV SIZES TO BE CONFIRMED DURING DETAILED ENGINEERING.
8. GOVERNING CASE FOR PSV AND PSV INLET/OULET LINE SIZES TO BE CONFIRMED DURING DETAILED ENGINEERING.
9. ALL DRAINS IN AMINE SERVICE SHALL BE ROUTED TO OPEN TUNDISH CONNECTED TO AMINE SUMP SYSTEM. DRAINIING TO SUMP SHALL ONLY OCCUR ONCE SYSTEM IS DEPRESSURED.
10. FACILITY CONSISTS OF TWO ABSORPTION TRAINS – DESIGN OF BOTH TRAINS IS TO BE IDENTICAL,WITH THE 2ND TRAIN DRAWINGS TO BE DEVELOPED DURING DETAILED ENGINEERING.

HOLDS:

NO.	DATE	REVISIONS	BY	CHK	APPR
000	07/17/20	ISSUED FOR INFORMATION	MDP	MJC	MJC/ADB

Owner
U. S. DEPARTMENT OF ENERGY, OFFICE OF FOSSIL ENERGY, NATIONAL ENERGY TECHNOLOGY LABORATORY

Contractor
BECHTEL NATIONAL, INC.

FEED STUDY FOR CARBON CAPTURE PLANT RETROFIT

PIPING & INSTRUMENT DIAGRAM
ABSORBER 1 WASH WATER
COOLING SYSTEM

Sheet Size 594 X 841 "A1" Scale N.T.S

JOB NO.	DRAWING NO.	REV.
26301	000-M6-CN-00030	000

Acknowledgment: This material is based upon work supported by the Department of Energy Award Number DE-FE0031648
Disclaimer: This report was prepared as an account of work sponsored by an agency of the United States Government. Neither the United States Government nor any agency thereof, nor any of their employees, makes any warranty, express or implied, or assumes any legal liability or responsibility for the accuracy, completeness, or usefulness of any information, apparatus, product, or process disclosed, or represents that its use would not infringe privately owned rights. Reference herein to any specific commercial product, process, or service by trade name, trademark, manufacturer, or otherwise does not necessarily constitute or imply its endorsement, recommendation, or favoring by the United States Government or any agency thereof. The views and opinions of authors expressed herein do not necessarily state or reflect those of the United States Government or any agency thereof.

MF-102

RICH AMINE MECHANICAL FILTER

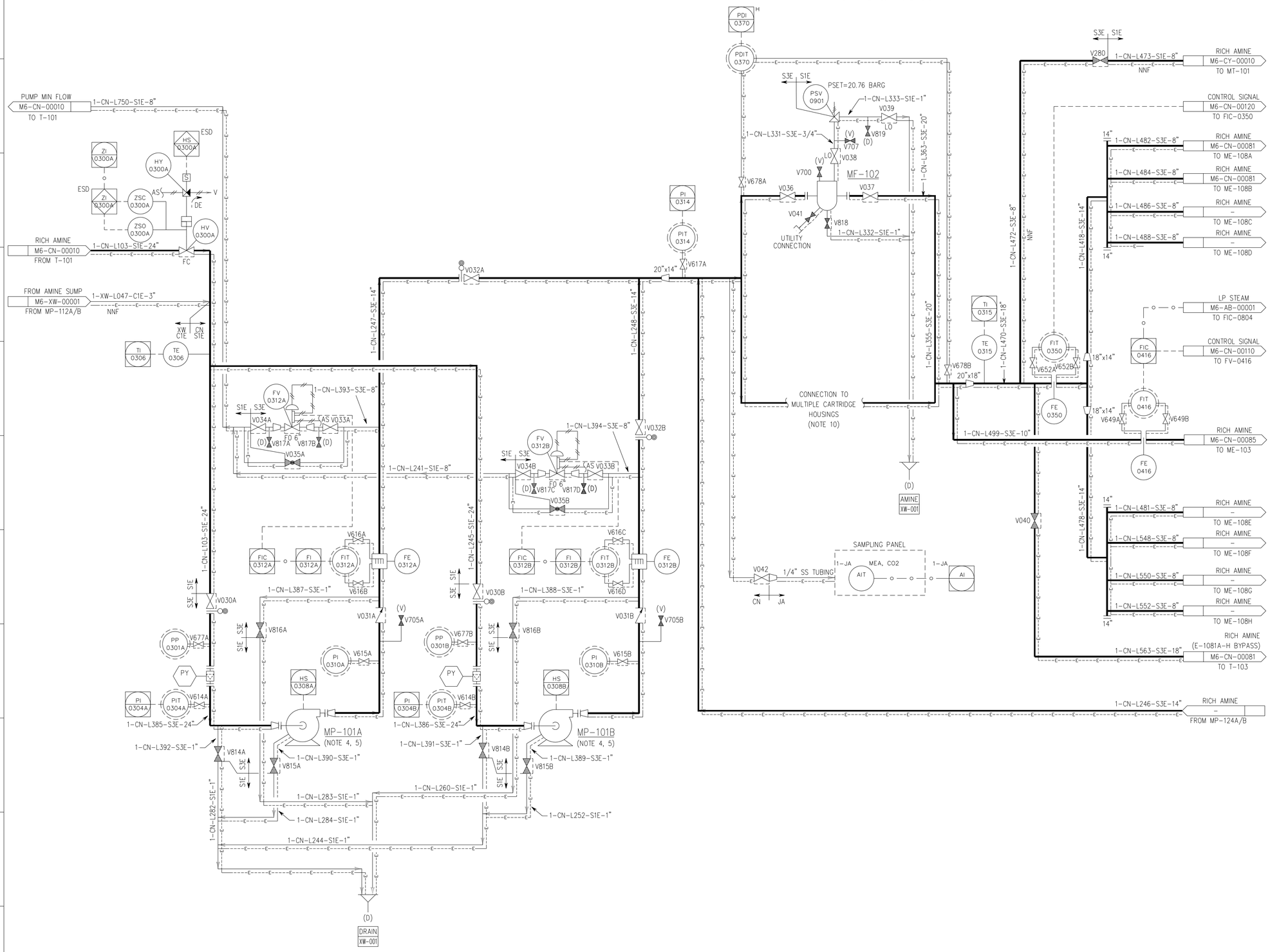

MP-101A/B

RICH AMINE PUMP (ABSORBER 1)

NOTES:

1. FOR SYMBOLS AND LEGENDS SEE DRAWINGS M6J-YA-00001 THROUGH M6J-YA-00005.
2. ALL LINES, VALVES, EQUIPMENT, AND INSTRUMENT NUMBERS ARE PREFIXED WITH "CN", UNLESS NOTED OTHERWISE.
3. ALL VENTS, DRAINS AND INSTRUMENTATION ROOT VALVES ARE 1", UNLESS NOTED OTHERWISE.
4. EQUIPMENT TO BE HEAT TRACED.
5. PUMP SEAL FLUSHING DETAILS TO BE DEVELOPED DURING DETAILED ENGINEERING.
6. START-UP STRAINER TO BE REMOVED SUBSEQUENT TO PLANT COMMISSIONING. A PIPE SPOOL IS TO BE INSERTED BETWEEN FLANGES SUSEQUENT TO REMOVAL OF THE START-UP STRAINER.
7. CONTROL VALVE AND PSV SIZES TO BE CONFIRMED DURING DETAILED ENGINEERING.
8. GOVERNING CASE FOR PSV AND PSV INLET/OULET LINE SIZES TO BE CONFIRMED DURING DETAILED ENGINEERING.
9. ALL DRAINS IN AMINE SERVICE SHALL BE ROUTED TO OPEN TUNDISH CONNECTED TO AMINE SUMP SYSTEM. DRAINIING TO SUMP SHALL ONLY OCCUR ONCE SYSTEM IS DEPRESSURED.
10. MULTIPLE CARTRIDGE HOUSINGS REQUIRED, NUMBER TO BE DEVELOPED BY VENDOR. SPARE HOUSING ON STANDBY TO BE PROVIDED FOR CARTRIDGE CHANGE-OUT.
11. FACILITY CONSISTS OF TWO ABSORPTION TRAINS – DESIGN OF BOTH TRAINS IS TO BE IDENTICAL,WITH THE 2ND TRAIN DRAWINGS TO BE DEVELOPED DURING DETAILED ENGINEERING.

HOLDS:

NO.	DATE	REVISIONS	BY	CHK	APPR
000	07/17/20	ISSUED FOR INFORMATION	MDP	MJC	MJC/ADB

Owner
U. S. DEPARTMENT OF ENERGY, OFFICE OF FOSSIL ENERGY, NATIONAL ENERGY TECHNOLOGY LABORATORY

Contractor
BECHTEL NATIONAL, INC.

FEED STUDY FOR CARBON CAPTURE PLANT RETROFIT

PIPING & INSTRUMENT DIAGRAM
ABSORBER 1 RICH AMINE PUMPS

Sheet Size	Scale	
594 X 841 "A1"	N.T.S	
JOB NO.	DRAWING NO.	REV.
26301	000-M6-CN-00040	000

Acknowledgment: This material is based upon work supported by the Department of Energy Award Number DE-FE0031648
Disclaimer: This report was prepared as an account of work sponsored by an agency of the United States Government. Neither the United States Government nor any agency thereof, nor any of their employees, makes any warranty, express or implied, or assumes any legal liability or responsibility for the accuracy, completeness, or usefulness of any information, apparatus, product, or process disclosed, or represents that its use would not infringe privately owned rights. Reference herein to any specific commercial product, process, or service by trade name, trademark, manufacturer, or otherwise does not necessarily constitute or imply its endorsement, recommendation, or favoring by the United States Government or any agency thereof. The views and opinions of authors expressed herein do not necessarily state or reflect those of the United States Government or any agency thereof.

ME-102
LEAN AMINE COOLER

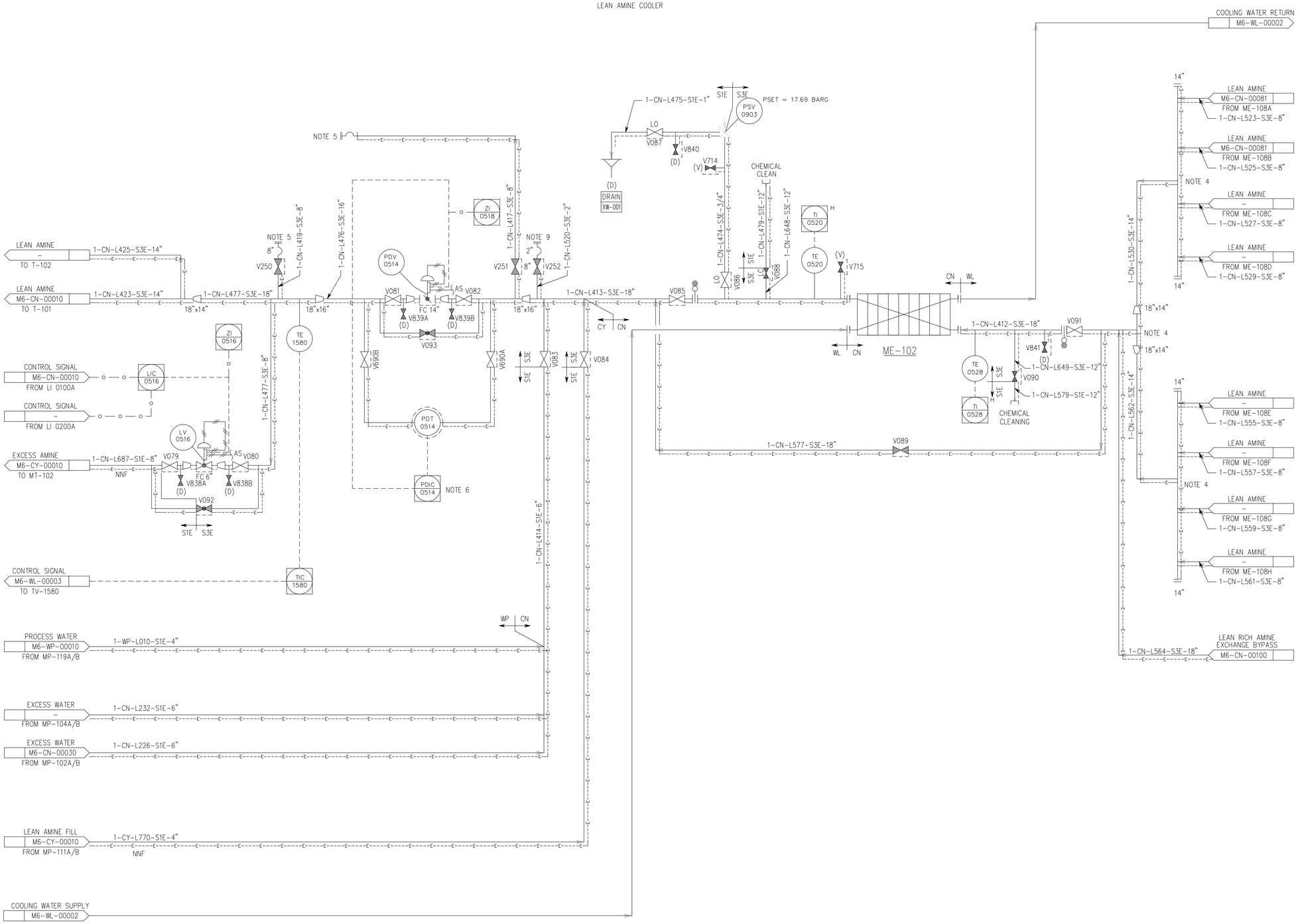

NOTES:

1. FOR SYMBOLS AND LEGENDS SEE DRAWINGS M6J-YA-00001 THROUGH M6J-YA-00005.
2. ALL LINES, VALVES, EQUIPMENT, AND INSTRUMENT NUMBERS ARE PREFIXED WITH "CN", UNLESS NOTED OTHERWISE.
3. EQUIPMENT TO BE HEAT TRACED.
4. SYMMETRICAL PIPING – NO POCKETS
5. FLEXIBLE CONNECTION FOR TEMPORARY SKID MOUNTED ACTIVATED CARBON TREATMENT UNIT. FLOWMETER SHALL BE PROVIDED WITHIN TEMPORARY SKID.
6. SETPOINT OF PDIC-0514 TO BE ADJUSTED WHEN TEMPORARY ACTIVATED CARBON TREATMENT UNIT IN USE TO ACHIEVE REQUIRED FLOWRATE THROUGH THE UNIT.
7. CONTROL VALVE AND PSV SIZES TO BE CONFIRMED DURING DETAILED ENGINEERING.
8. GOVERNING CASE FOR PSV AND PSV INLET/OULET LINE SIZES TO BE CONFIRMED DURING DETAILED ENGINEERING.
9. FLEXIBLE CONNECTION FOR CONNECTION TO ANTI-FOAM INJECTION SKID.
10. ALL DRAINS IN AMINE SERVICE SHALL BE ROUTED TO OPEN TUNDISH CONNECTED TO AMINE SUMP SYSTEM. DRAINIING TO SUMP SHALL ONLY OCCUR ONCE SYSTEM IS DEPRESSURED.

HOLDS:

NO.	DATE	REVISIONS	BY	CHK	APPR
000	07/17/20	ISSUED FOR INFORMATION	MDP	MJC	MJC/ ADB

Owner
U. S. DEPARTMENT OF ENERGY, OFFICE OF FOSSIL ENERGY, NATIONAL ENERGY TECHNOLOGY LABORATORY

Contractor
BECHTEL NATIONAL, INC.

FEED STUDY FOR CARBON CAPTURE PLANT RETROFIT

PIPING & INSTRUMENT DIAGRAM
LEAN AMINE COOLING SYSTEM

Sheet Size	Scale	
594 X 841 "A1"	N.T.S	
JOB NO.	DRAWING NO.	REV.
26301	000-M6-CN-00080	000

Acknowledgment: This material is based upon work supported by the Department of Energy Award Number DE-FE0031648
Disclaimer: This report was prepared as an account of work sponsored by an agency of the United States Government. Neither the United States Government nor any agency thereof, nor any of their employees, makes any warranty, express or implied, or assumes any legal liability or responsibility for the accuracy, completeness, or usefulness of any information, apparatus, product, or process disclosed, or represents that its use would not infringe privately owned rights. Reference herein to any specific commercial product, process, or service by trade name, trademark, manufacturer, or otherwise does not necessarily constitute or imply its endorsement, recommendation, or favoring by the United States Government or any agency thereof. The views and opinions of authors expressed herein do not necessarily state or reflect those of the United States Government or any agency thereof.

ME-108A/B

LEAN/RICH AMINE HEAT EXCHANGERS
(NOTE 8)

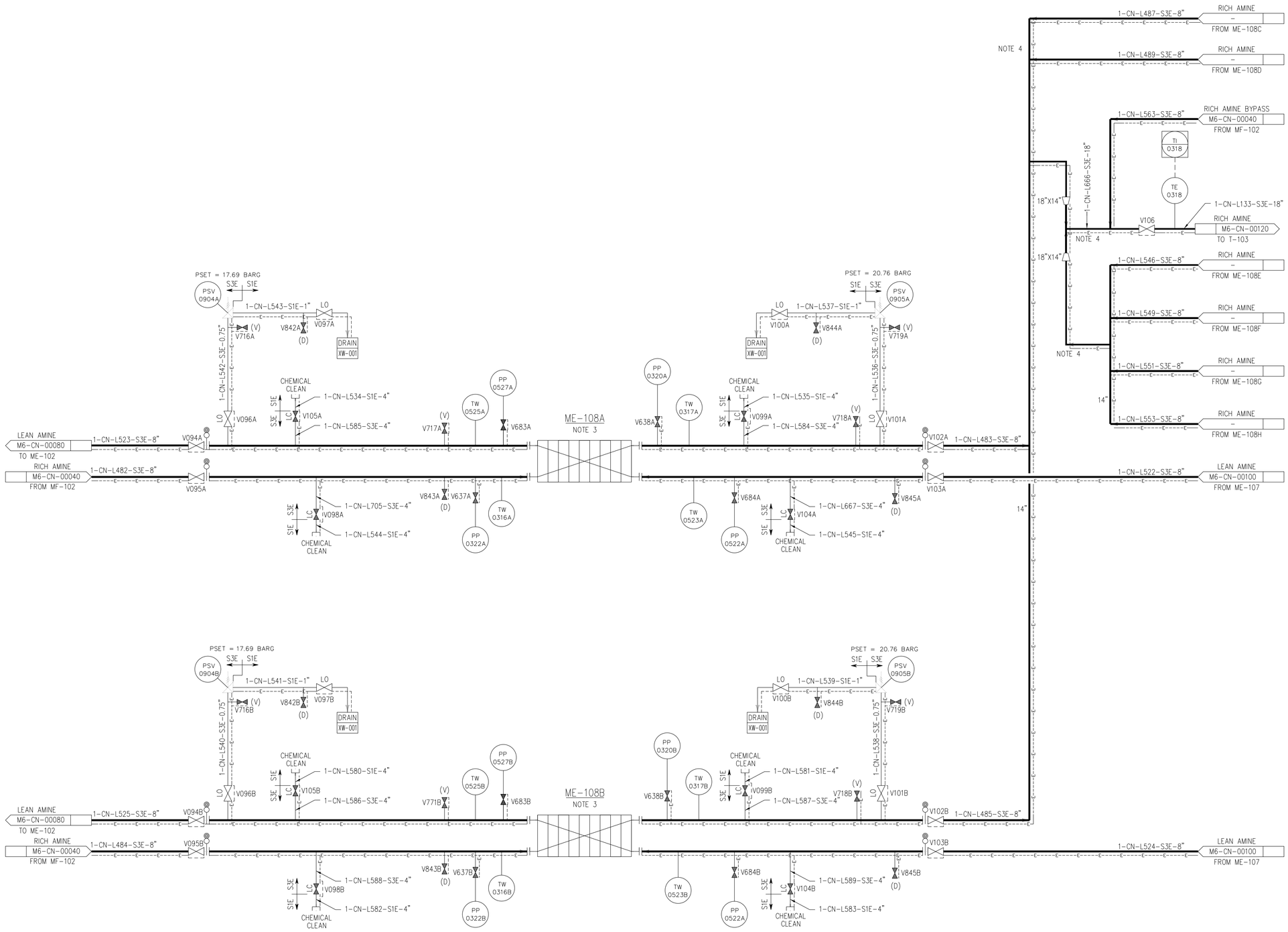

NOTES:

1. FOR SYMBOLS AND LEGENDS SEE DRAWINGS M6J-YA-00001 THROUGH M6J-YA-00005.
2. ALL LINES, VALVES, EQUIPMENT, AND INSTRUMENT NUMBERS ARE PREFIXED WITH "CN", UNLESS NOTED OTHERWISE.
3. EQUIPMENT TO BE HEAT TRACED.
4. SYMMETRICAL PIPING.
5. CONTROL VALVE AND PSV SIZES TO BE CONFIRMED DURING DETAILED ENGINEERING.
6. GOVERNING CASE FOR PSV AND PSV INLET/OUTLET LINE SIZE TO BE CONFIRMED DURING DETAILED ENGINEERING.
7. ALL DRAINS IN AMINE SERVICE SHALL BE ROUTED TO OPEN TUNDISH CONNECTED TO AMINE SUMP SYSTEM. DRAINIING TO SUMP SHALL ONLY OCCUR ONCE SYSTEM IS DEPRESSURED.
8. NUMBER OF FRAMES OF HEAT EXCHANGER TO BE CONFIRMED BY VENDOR DURING DETAILED ENGINEERING. DESIGN OF ADDITIONAL FRAMES TO BE IDENTICAL WITH THE DRAWINGS TO BE DEVELOPED DURING DETAILED ENGINEERING.

NO.	DATE	REVISIONS	BY	CHK	APPR
000	07/17/20	ISSUED FOR INFORMATION	MDP	MJC	MJC/ ADB

Owner
U. S. DEPARTMENT OF ENERGY, OFFICE OF FOSSIL ENERGY, NATIONAL ENERGY TECHNOLOGY LABORATORY

FEED STUDY FOR CARBON CAPTURE PLANT RETROFIT

PIPING & INSTRUMENT DIAGRAM
LEAN AMINE / RICH AMINE
HEAT EXCHANGERS

Contractor
BECHTEL NATIONAL, INC.

Sheet Size 594 X 841 "A1" Scale N.T.S

JOB NO.	DRAWING NO.	REV.
26301	000-M6-CN-00081	000

ME-103A/B

SEMI-LEAN/RICH AMINE HEAT EXCHANGERS

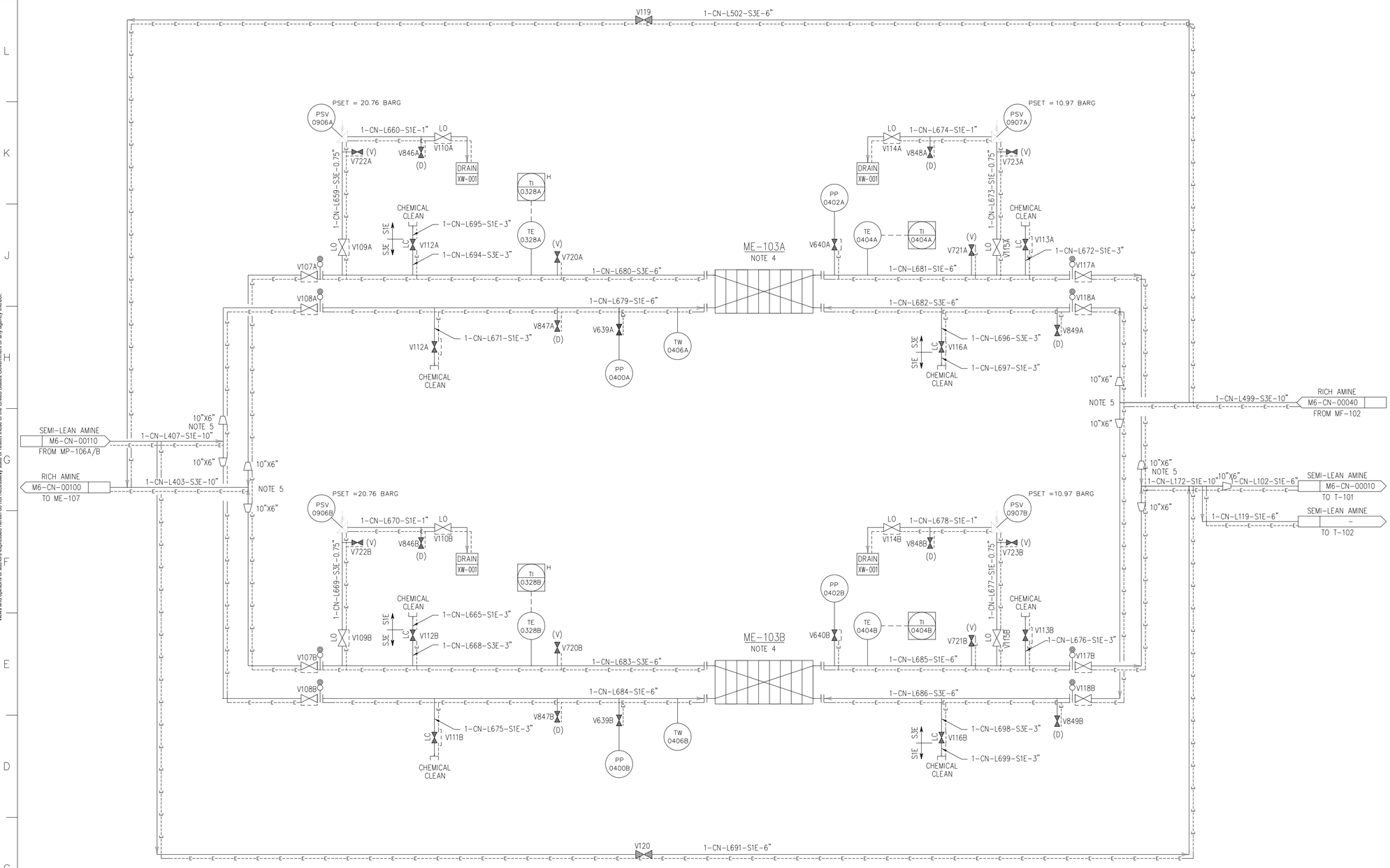

NOTES:

1. FOR SYMBOLS AND LEGENDS SEE DRAWINGS M6J-YA-00001 THROUGH M6J-YA-00005.
2. ALL LINES, VALVES, EQUIPMENT, AND INSTRUMENT NUMBERS ARE PREFIXED WITH "CN", UNLESS NOTED OTHERWISE.
3. ALL VENTS, DRAINS AND INSTRUMENTATION ROOT VALVES ARE 1", UNLESS NOTED OTHERWISE
4. EQUIPMENT TO BE HEAT TRACED.
5. PIPING TO ME-103A/B TO BE SYMMETRICAL.
6. CONTROL VALVE AND PSV SIZES TO BE CONFIRMED DURING DETAILED ENGINEERING.
7. GOVERNING CASE FOR PSV AND PSV INLET/OUTLET LINE SIZE TO BE CONFIRMED DURING DETAILED ENGINEERING.
8. ALL DRAINS IN AMINE SERVICE SHALL BE ROUTED TO OPEN TUNDISH CONNECTED TO AMINE SUMP SYSTEM. DRAINIING TO SUMP SHALL ONLY OCCUR ONCE SYSTEM IS DEPRESSURED.

NO.	DATE	REVISIONS	BY	CHK	APPR
000	07/17/20	ISSUED FOR INFORMATION	MDP	MJC	MJC/ADB

Owner
U. S. DEPARTMENT OF ENERGY, OFFICE OF FOSSIL ENERGY, NATIONAL ENERGY TECHNOLOGY LABORATORY

Contractor
BECHTEL NATIONAL, INC.

FEED STUDY FOR CARBON CAPTURE PLANT RETROFIT

PIPING & INSTRUMENT DIAGRAM
SEMI-LEAN AMINE / RICH AMINE HEAT EXCHANGER

Sheet Size 594 X 841 "A1" Scale N.T.S

JOB NO.	DRAWING NO.	REV.
26301	000-M6-CN-00085	000

Acknowledgment: This material is based upon work supported by the Department of Energy Award Number DE-FE0031648

Disclaimer: This report was prepared as an account of work sponsored by the United States Government. Neither the United States Government nor any agency thereof, nor any of their employees, makes any warranty, express or implied, or assumes any legal liability or responsibility for the accuracy, completeness, or usefulness of any information, apparatus, product, or process disclosed, or represents that its use would not infringe privately owned rights. Reference herein to any specific commercial product, process, or service by trade name, trademark, manufacturer, or otherwise does not necessarily constitute or imply its endorsement, recommendation, or favoring by the United States Government or any agency thereof. The views and opinions of authors expressed herein do not necessarily state or reflect those of the United States Government or any agency thereof.

Acknowledgment: This material is based upon work supported by the Department of Energy Award Number DE-FE0031648
Disclaimer: This report was prepared as an account of work sponsored by an agency of the United States Government. Neither the United States Government nor any agency thereof, nor any of their employees, makes any warranty, express or implied, or assumes any legal liability or responsibility for the accuracy, completeness, or usefulness of any information, apparatus, product, or process disclosed, or represents that its use would not infringe privately owned rights. Reference herein to any specific commercial product, process, or service by trade name, trademark, manufacturer, or otherwise does not necessarily constitute or imply its endorsement, recommendation, or favoring by the United States Government or any agency thereof. The views and opinions of authors expressed herein do not necessarily state or reflect those of the United States Government or any agency thereof.

ME-107
FLASH FEED HEAT EXCHANGER

ME-109
FLASH FEED HEATER

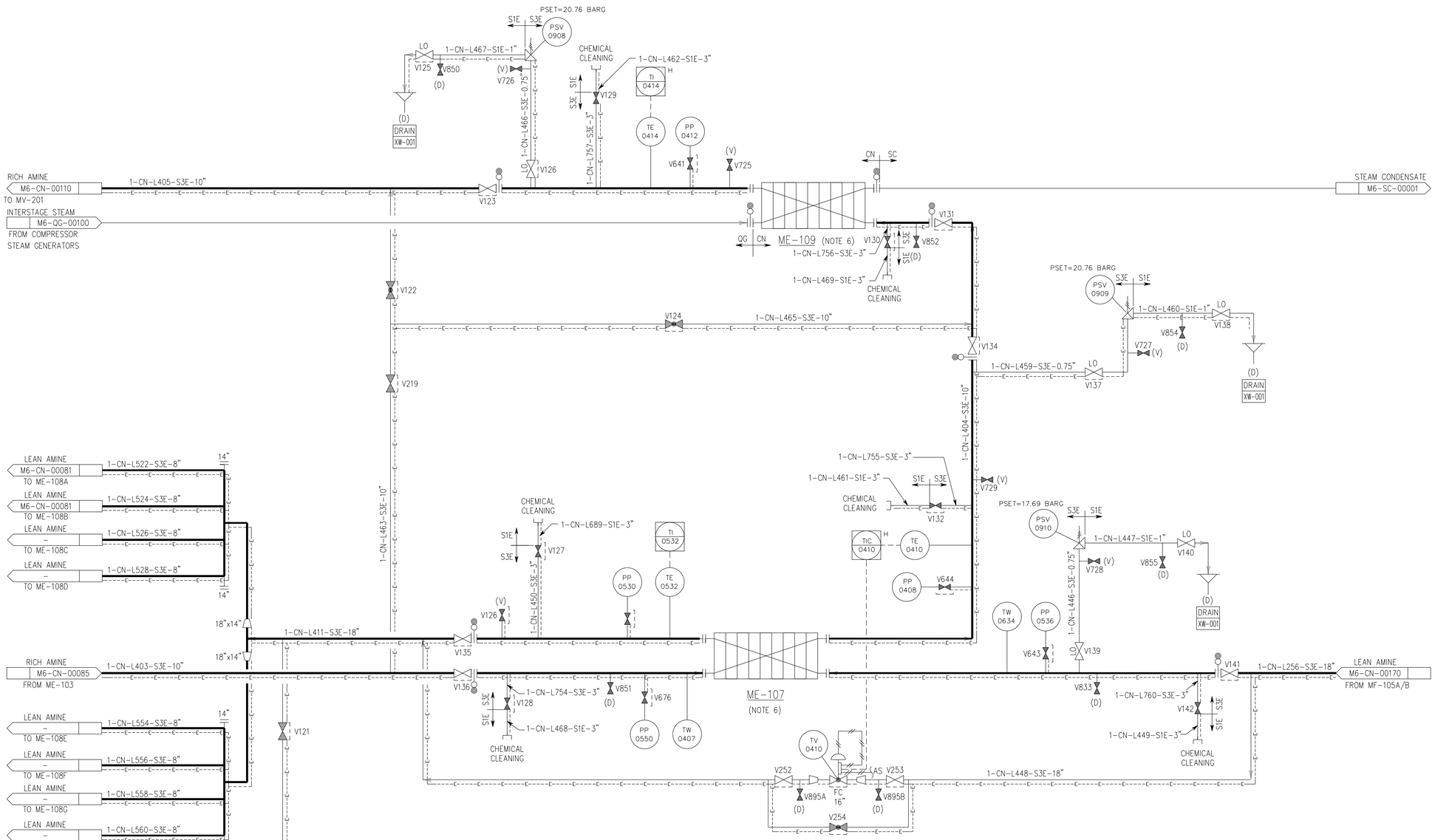

NOTES:

1. FOR SYMBOLS AND LEGENDS SEE DRAWINGS M6J-YA-00001 THROUGH M6J-YA-00005.
2. ALL LINES, VALVES, EQUIPMENT, AND INSTRUMENT NUMBERS ARE PREFIXED WITH "CN, UNLESS NOTED OTHERWISE.
3. ALL VENTS, DRAINS AND INSTRUMENTATION ROOT VALVES ARE 1", UNLESS NOTED OTHERWISE.
4. ✳ SYMBOL INDICATES EQUIPMENT SUPPLIED BY VENDOR.
5. REFER TO DRAWING (LATER) FOR SAMPLE CONNECTION DETAILS.
6. EQUIPMENT TO BE HEAT TRACED.
7. CONTROL VALVE AND PSV SIZES TO BE CONFIRMED DURING DETAILED ENGINEERING.
8. GOVERNING CASE FOR PSV AND PSV INLET/OUTLET LINE SIZES TO BE CONFIRMED DURING DETAILED ENGINEERING.
9. ALL DRAINS IN AMINE SERVICE SHALL BE ROUTED TO OPEN TUNDISH CONNECTED TO AMINE SUMP SYSTEM. DRAINIING TO SUMP SHALL ONLY OCCUR ONCE SYSTEM IS DEPRESSURED.

HOLDS:

NO.	DATE	REVISIONS	BY	CHK	APPR
000	07/17/20	ISSUED FOR INFORMATION	MDP	MJC	MJC/ ADB

Owner
U. S. DEPARTMENT OF ENERGY, OFFICE OF FOSSIL ENERGY, NATIONAL ENERGY TECHNOLOGY LABORATORY

Contractor
BECHTEL NATIONAL, INC.

FEED STUDY FOR CARBON CAPTURE PLANT RETROFIT

PIPING & INSTRUMENT DIAGRAM
FLASH FEED HEATERS

Sheet Size	Scale	
594 X 841 "A1"	N.T.S	
JOB NO.	DRAWING NO.	REV.
26301	000-M6-CN-00100	000

Acknowledgment: This material is based upon work supported by the Department of Energy Award Number DE-FE0031648
Disclaimer: This report was prepared as an account of work sponsored by the United States Government. Neither the United States Government nor any agency thereof, nor any of their employees, makes any warranty, express or implied, or assumes any legal liability or responsibility for the accuracy, completeness, or usefulness of any information, apparatus, product, or process disclosed, or represents that its use would not infringe privately owned rights. Reference herein to any specific commercial product, process, or service by trade name, trademark, manufacturer, or otherwise does not necessarily constitute or imply its endorsement, recommendation, or favoring by the United States Government or any agency thereof. The views and opinions of authors expressed herein do not necessarily state or reflect those of the United States Government or any agency thereof.

MV-201

SEMI-LEAN AMINE FLASH DRUM

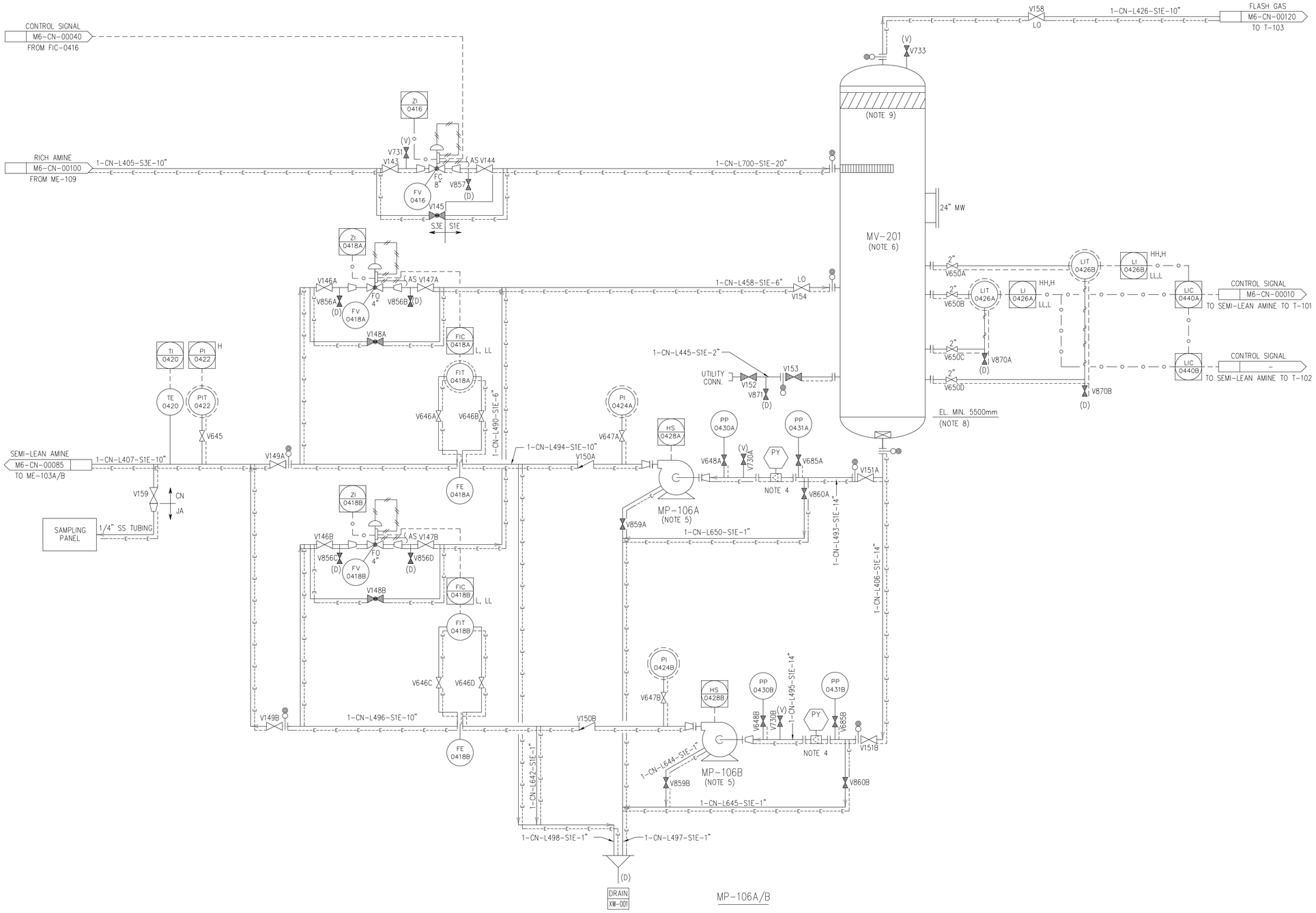

MP-106A/B

FLASH DRUM PUMP

NOTES:

1. FOR SYMBOLS AND LEGENDS SEE DRAWINGS M6J-YA-00001 THROUGH M6J-YA-00005.
2. ALL LINES, VALVES, EQUIPMENT, AND INSTRUMENT NUMBERS ARE PREFIXED WITH "CN", UNLESS NOTED OTHERWISE.
3. ALL VENTS, DRAINS AND INSTRUMENTATION ROOT VALVES ARE 1", UNLESS NOTED OTHERWISE.
4. STARTUP STRAINER TO BE REMOVED SUBSEQUENT TO PLANT COMMISSIONING. TO BE REPLACED BY COURSE STRAINER FOR NORMAL OPERATIONS.
5. PUMP SEAL FLUSH DETAILS TO BE CONFIRMED DURING DETAILED ENGINEERING.
6. EQUIPMENT TO BE HEAT TRACED UP TO HLL.
7. CONTROL VALVE SIZES TO BE CONFIRMED DURING DETAILED ENGINEERING.
8. MINIMUM ELEVATION OF MV-201 BASED ON PRELIMINARY HYDRAULICS AND ASSUMED PUMP CENTRE-LINE ELEVATION. VESSEL ELEVATION TO BE CONFIRMED DURING DETAILED ENGINEERING.
9. NON-BLOCKING TYPE DEMISTER TO BE SUPPLIED (E.G. VANE PACK).
10. ALL DRAINS IN AMINE SERVICE SHALL BE ROUTED TO OPEN TUNDISH CONNECTED TO AMINE SUMP SYSTEM. DRAINIING TO SUMP SHALL ONLY OCCUR ONCE SYSTEM IS DEPRESSURED.

NO.	DATE	REVISIONS	BY	CHK	APPR
000	07/17/20	ISSUED FOR INFORMATION	MDP	MJC	MJC/ ADB

Owner
U. S. DEPARTMENT OF ENERGY, OFFICE OF FOSSIL ENERGY, NATIONAL ENERGY TECHNOLOGY LABORATORY

Contractor
BECHTEL NATIONAL, INC.

FEED STUDY FOR CARBON CAPTURE PLANT RETROFIT

PIPING & INSTRUMENT DIAGRAM
SEMI-LEAN AMINE FLASH SYSTEM

Sheet Size	Scale	
594 X 841 "A1"	N.T.S	
JOB NO.	DRAWING NO.	REV.
26301	000-M6-CN-00110	000

Acknowledgment: This material is based upon work supported by the Department of Energy Award Number DE-FE0031848
Disclaimer: This report was prepared as an account of work sponsored by an agency of the United States Government. Neither the United States Government nor any agency thereof, nor any of their employees, makes any warranty, express or implied, or assumes any legal liability or responsibility for the accuracy, completeness, or usefulness of any information, apparatus, product, process, or service by trade name, trademark, manufacturer, or otherwise does not necessarily constitute or imply its endorsement, recommendation, or favoring by the United States Government or any agency thereof. The views and opinions of authors expressed herein do not necessarily state or reflect those of the United States Government or any agency thereof.

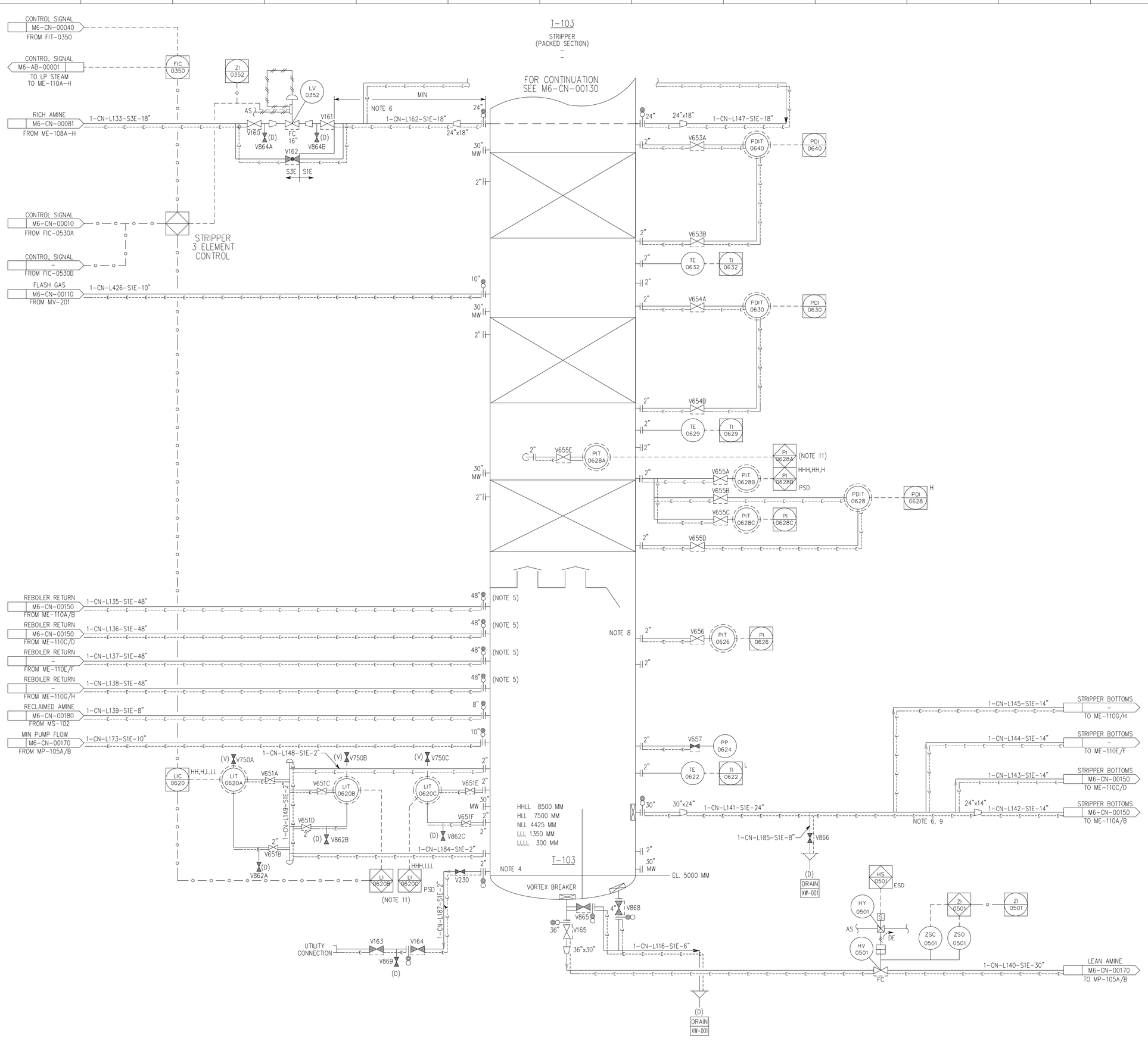

NOTES:

1. FOR SYMBOLS AND LEGENDS SEE DRAWINGS M6J-YA-00001 THROUGH M6J-YA-00005.
2. ALL LINES, VALVES, EQUIPMENT, AND INSTRUMENT NUMBERS ARE PREFIXED WITH "CN", UNLESS NOTED OTHERWISE.
3. ALL VENTS, DRAINS AND INSTRUMENTATION ROOT VALVES ARE 1", UNLESS NOTED OTHERWISE.
4. HEAT TRACE BOTTOM OF STRIPPER COLUMN UP TO THE HIGH-HIGH LIQUID LEVEL.
5. FOUR NOZZLES FROM E-110A-H PLACED AROUND COLUMN DIAMETER, SAME HEIGHT, LINE SIZE AND CONFIGURATION TO BE FINALIZED DURING DETAILED ENGINEERING
6. SYMMETRICAL PIPING.
7. CONTROL VALVE SIZES TO BE CONFIRMED DURING DETAILED ENGINEERING.
8. COLUMN INTERNALS ARE TO BE FINALISED DURING DETAILED ENGINEERING BASED ON VENDOR DETAILS.
9. NUMBER AND CONFIGURATION OF REBOILERS AND ASSOCIATED INLET/OUTLET NOZZLES AND PIPING TO BE FINALISED DURING DETAILED ENGINEERING BASED ON VENDOR DETAILS. NOZZLES SHALL BE AT SAME HEIGHT, LINE SIZE AND CONFIGURATION TO ENSURE EVEN FLOW TO REBOILERS
10. ALL DRAINS IN AMINE SERVICE SHALL BE ROUTED TO OPEN TUNDISH CONNECTED TO AMINE SUMP SYSTEM. DRAINIING TO SUMP SHALL ONLY OCCUR ONCE SYSTEM IS DEPRESSURED.
11. FOR FULL DETAILS OF SHUTDOWN LOGIC (PSD) REFER TO 26301-000-J4-JD-00001.

HOLDS:

NO.	DATE	REVISIONS	BY	CHK	APPR
000	07/23/20	ISSUED FOR INFORMATION	MDP	MJC	MJC/ADB

Owner
U. S. DEPARTMENT OF ENERGY, OFFICE OF FOSSIL ENERGY, NATIONAL ENERGY TECHNOLOGY LABORATORY

FEED STUDY FOR CARBON CAPTURE PLANT RETROFIT

Contractor
BECHTEL NATIONAL, INC.

PIPING & INSTRUMENT DIAGRAM AMINE STRIPPER (PACKED SECTION)

Sheet Size	Scale	
594 X 841 "A1"	N.T.S	
JOB NO.	DRAWING NO.	REV.
26301	000-M6-CN-00120	000

Acknowledgment: This material is based upon work supported by the Department of Energy Award Number DE-FE0031648
Disclaimer: This report was prepared as an account of work sponsored by an agency of the United States Government. Neither the United States Government nor any agency thereof, nor any of their employees, makes any warranty, express or implied, or assumes any legal liability or responsibility for the accuracy, completeness, or usefulness of any information, apparatus, product, or process disclosed, or represents that its use would not infringe privately owned rights. Reference herein to any specific commercial product, process, or service by trade name, trademark, manufacturer, or otherwise does not necessarily constitute or imply its endorsement, recommendation, or favoring by the United States Government or any agency thereof. The views and opinions of authors expressed herein do not necessarily state or reflect those of the United States Government or any agency thereof.

T-103
STRIPPER
(TRAYED SECTION)

ME-111A-D
OVERHEAD STRIPPER CONDENSER

RELIEF
M6-QG-00010
TO VENT HEADER
1-CN-L753-S1E-8"
NO POCKETS
LO V261
V895 (D)
(V) V751
PSV 0920
PSET=3.45 BARG
1-CN-L758-S1E-2"
V282
LO V260
1-CN-L752-S1E-6"
40"
4" V750
TI 0644 H
TE 0644
REFLUX
M6-CN-00140
FROM MP-107A/B
1-CN-L153-S1E-2"
2"
PI 0642
PIT 0642
V659
30" MW
TRAY 1
TRAY 2
TRAY 3
2" TE 0641 TI 0641
(T-103)
FOR CONTINUATION SEE M6-CN-00120

TI 0646 H
TE 0646
1-QG-L588-S1E-20"
NNF
FREE DRAINING
ANTI-SURGE
M6-QG-00020
FROM MC-101 FIRST STAGE
SLOPE
1-CN-L151-S1E-40"
65
V658
PP 0648

(V) V735A
1-CN-L158-S1E-20"
V168A
20" (NOTE 4)
CN WL
1-CN-L188-S1E-4"
V171A
CHEMICAL CLEANING
WL CN
ME-111A
TW 0649A
V172A
V169A
1-CN-L180-S1E-20"
(NOTE 6)
V869A (D)
1-CN-L179-S1E-4"
CHEMICAL CLEANING
30"
(NOTE 5)
COOLING WATER SUPPLY
M6-WL-00002
COOLING WATER RETURN
M6-WL-00003

(V) V735B
1-CN-L159-S1E-20"
V168B
1-CN-L189-S1E-4"
V171B
ME-111B
TW 0649B
V172B
V169B
1-CN-L181-S1E-20"
V869B (D)
1-CN-L176-S1E-4"
40"x30"

(V) V735C
1-CN-L160-S1E-20"
V168C
1-CN-L190-S1E-4"
V171C
ME-111C
TW 0649C
V172C
V169C
1-CN-L182-S1E-20"
V869C (D)
1-CN-L177-S1E-4"
42"x30"
1-CN-L152-S1E-42"
STRIPPER OVERHEAD
M6-CN-00140
TO MV-202
V692
PP 0650
TE 0652
TI 0652
TIC 0652 H
CONTROL SIGNAL
M6-WL-00003
TO TV-1592A

(V) V735D
1-CN-L161-S1E-20"
V168D
1-CN-L191-S1E-4"
V171D
ME-111D
TW 0649D
V172D
V169D
1-CN-L183-S1E-20"
V869D (D)
1-CN-L178-S1E-4"

NOTES:
1. FOR SYMBOLS AND LEGENDS SEE DRAWINGS M6J-YA-00001 THROUGH M6J-YA-00005.
2. ALL LINES, VALVES, EQUIPMENT, AND INSTRUMENT NUMBERS ARE PREFIXED WITH "CN", UNLESS NOTED OTHERWISE.
3. ALL VENTS, DRAINS AND INSTRUMENTATION ROOT VALVES ARE 1", UNLESS NOTED OTHERWISE.
4. EQUIPMENT TO BE HEAT TRACED.
5. SYMMETRICAL PIPING – NO POCKETS.
6. TWO PHASE FLOW – NO POCKETS.
7. PSV SIZES TO BE CONFIRMED DURING DETAILED ENGINEERING.
8. GOVERNING CASE FOR PSV TO BE CONFIRMED DURING DETAILED ENGINEERING.
9. ALL VENTS IN CO2 SERVICE SHALL BE HARD PIPED TO VENT HEADER UNLESS A DEPRESSURING ROUTE TO THE VENT SYSTEM IS ALREADY AVAILABLE.

NO.	DATE	REVISIONS	BY	CHK	APPR
000	07/17/20	ISSUED FOR INFORMATION	MDP	MJC	MJC/ ADB

Owner
U. S. DEPARTMENT OF ENERGY, OFFICE OF FOSSIL ENERGY, NATIONAL ENERGY TECHNOLOGY LABORATORY

Contractor
BECHTEL NATIONAL, INC.

FEED STUDY FOR CARBON CAPTURE PLANT RETROFIT

PIPING & INSTRUMENT DIAGRAM
AMINE STRIPPER
(TRAYED SECTION)

Sheet Size 594 X 841 "A1" | Scale N.T.S

JOB NO.	DRAWING NO.	REV.
26301	000-M6-CN-00130	000

Acknowledgment: This material is based upon work supported by the Department of Energy Award Number DE-FE0031648
Disclaimer: This report was prepared as an account of work sponsored by the United States Government. Neither the United States Government nor any agency thereof, nor any of their employees, makes any warranty, express or implied, or assumes any legal liability or responsibility for the accuracy, completeness, or usefulness of any information, apparatus, product, or process disclosed, or represents that its use would not infringe privately owned rights. Reference herein to any specific commercial product, process, or service by trade name, trademark, manufacturer, or otherwise does not necessarily constitute or imply its endorsement, recommendation, or favoring by the United States Government or any agency thereof. The views and opinions of authors expressed herein do not necessarily state or reflect those of the United States Government or any agency thereof.

MV-202
STRIPPER REFLUX DRUM

PSET = 3.45 BARG

RELIEF VAPOR
M6-QG-00010
TO VENT HEADER
1-CN-L233-S1E-6"
NO POCKETS

STRIPPER OVERHEAD
M6-CN-00130
FROM E-111
1-CN-L152-S1E-42"
NO POCKETS

MV-202
(NOTE 4)

EL. 3100mm
(NOTE 9)

1-CN-L354-S1E-4"
1-CN-L384-S1E-4"

1-CN-L234-S1E-6"
1-CN-L235-S1E-6"
1-CN-L295-S1E-1"
1-CN-L292-S1E-1"
1-CN-L291-S1E-1"
1-CN-L293-S1E-1"
1-CN-L294-S1E-1"
1-CN-L296-S1E-1"
1-CN-L324-S1E-3"
1-CN-L325-S1E-3"
1-CN-L323-S1E-4"
1-CN-L237-S1E-4"

MP-107A
(NOTES 4, 5)

MP-107B
(NOTES 4, 5)

MP-107 A/B
REFLUX PUMP

1-QG-L647-S1E-24"
NO POCKETS
CO2 VENT
M6-QG-00010
TO VENT HEADER

1-QG-L643-S1E-24"
NO POCKETS
(NOTE 2)
CO2
M6-QG-00010
TO MV-203

REFLUX PURGE
M6-WP-00010
TO MT-104
1-CN-L238-S1E-4"

REFLUX
M6-CN-000130
TO T-103
1-CN-L153-S1E-2"

DRAIN
XW-001

NOTES:

1. FOR SYMBOLS AND LEGENDS SEE DRAWINGS M6J-YA-00001 THROUGH M6J-YA-00005.
2. ALL LINES, VALVES, EQUIPMENT, AND INSTRUMENT NUMBERS ARE PREFIXED WITH "CN", EXCEPT THE VAPOUR OVERHEAD LINE WHERE ALL ELEMENTS ARE PREFIXED WITH "QG".
3. ALL VENT DRAINS AND INSTRUMENT NUMBERS ARE 1", UNLESS NOTED OTHERWISE.
4. EQUIPMENT TO BE HEAT TRACED, VESSEL UP TO HLL ONLY.
5. PUMP SEAL FLUSHING DETAILS TO BE PREPARED LATER.
6. STARTUP STRAINER TO BE REMOVED SUBSEQUENT TO PLANT COMISSIONING. TO BE REPLACED BY COARSE STRAINER FOR NORMAL OPERATIONS.
7. CONTROL VALVE AND PSV SIZES TO BE CONFIRMED DURING DETAILED ENGINEERING.
8. GOVERNING CASE FOR PSV AND PSV INLET/OUTLET LINE SIZES TO BE CONFIRMED DURING DETAILED ENGINEERING.
9. ELEVATION OF MV-202 BASED ON PRELIMINARY HYDRAULICS AND ASSUMED PUMP CENTRE-LINE ELEVATION. VESSEL ELEVATION TO BE CONFIRMED DURING DETAILED ENGINEERING.
10. ALL VENTS IN CO2 SERVICE SHALL BE HARD PIPED TO VENT HEADER UNLESS A DEPRESSURING ROUTE TO THE VENT SYSTEM IS ALREADY AVAILABLE.

HOLDS:

NO.	DATE	REVISIONS	BY	CHK	APPR
000	07/17/20	ISSUED FOR INFORMATION	MDP	MJC	MJC/ADB

Owner
U. S. DEPARTMENT OF ENERGY, OFFICE OF FOSSIL ENERGY, NATIONAL ENERGY TECHNOLOGY LABORATORY

Contractor
BECHTEL NATIONAL, INC.

FEED STUDY FOR CARBON CAPTURE PLANT RETROFIT

PIPING & INSTRUMENT DIAGRAM
STRIPPER REFLUX SECTION

Sheet Size 594 X 841 "A1" | Scale N.T.S

JOB NO.	DRAWING NO.	REV.
26301	000-M6-CN-00140	000

Acknowledgment: This material is based upon work supported by the Department of Energy Award Number DE-FE0031648
Disclaimer: This report was prepared as an account of work sponsored by an agency of the United States Government. Neither the United States Government nor any agency thereof, nor any of their employees, makes any warranty, express or implied, or assumes any legal liability or responsibility for the accuracy, completeness, or usefulness of any information, apparatus, product, or process disclosed, or represents that its use would not infringe privately owned rights. Reference herein to any specific commercial product, process, or service by trade name, trademark, manufacturer, or otherwise does not necessarily constitute or imply its endorsement, recommendation, or favoring by the United States Government or any agency thereof. The views and opinions of authors expressed herein do not necessarily state or reflect those of the United States Government or any agency thereof.

ME-110A/B/C/D

STRIPPER REBOILER
(NOTE 8)

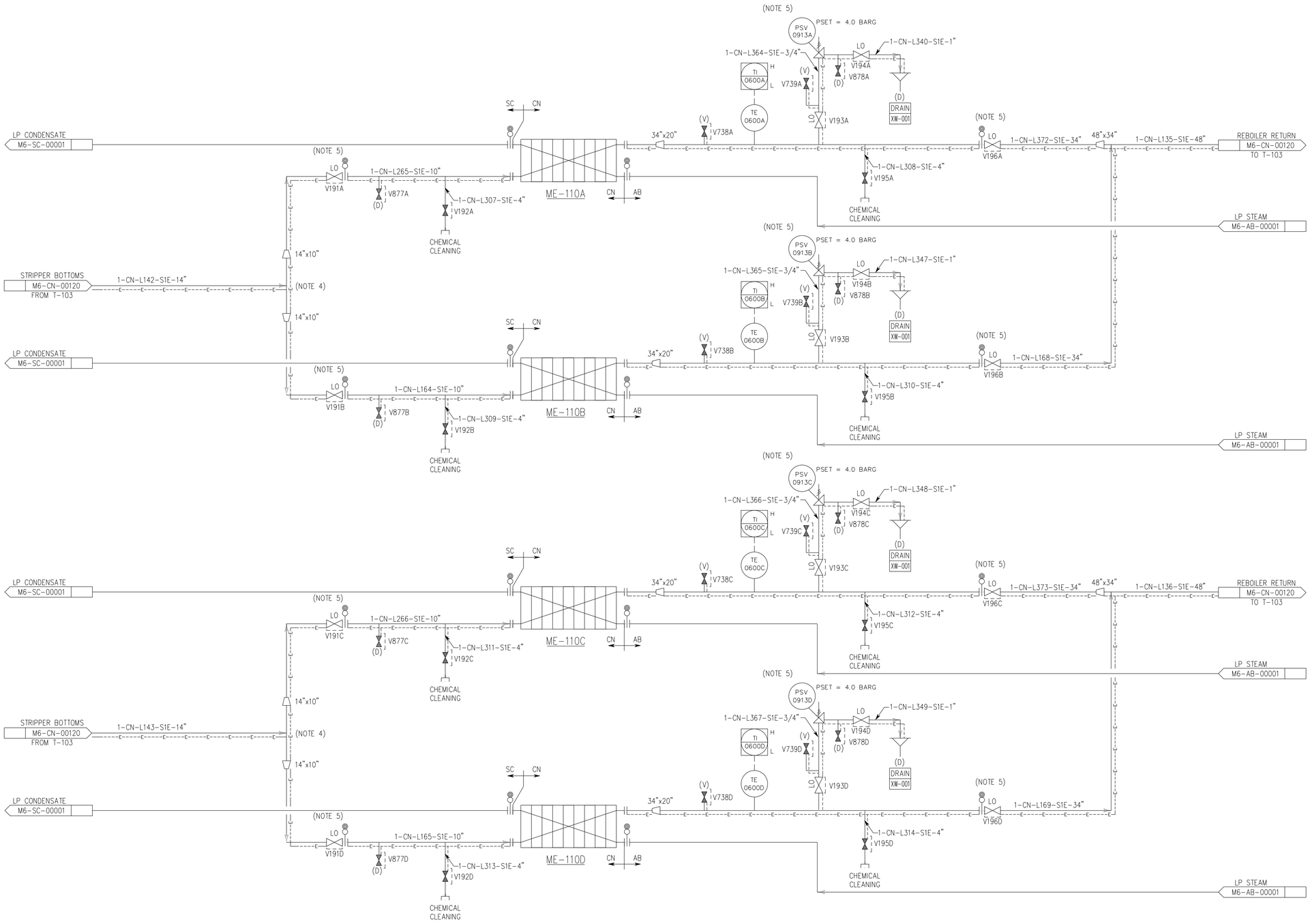

NOTES:

1. FOR SYMBOLS AND LEGENDS SEE DRAWINGS M6J-YA-00001 THROUGH M6J-YA-00005.
2. ALL LINES, VALVES, EQUIPMENT, AND INSTRUMENT NUMBERS ARE PREFIXED WITH "CN", UNLESS NOTED OTHERWISE.
3. ALL VENTS, DRAINS AND INSTRUMENTATION ROOT VALVES ARE 1", UNLESS NOTED OTHERWISE.
4. PIPING TO E-110A/B AND E-110C/D TO BE SYMMETRICAL.
5. PSV FOR THERMAL RELIEF DURING CHEMICAL CLEANING ONLY. DURING NORMAL OPERATION BLOCK VALVES ON EXCHANGER INLET/OUTLET LINES ARE TO BE LOCKED OPEN.
6. PSV SIZES TO BE CONFIRMED DURING DETAILED ENGINEERING.
7. GOVERNING CASE FOR PSV AND PSV INLET/OUTLET LINE SIZES TO BE CONFIRMED DURING DETAILED ENGINEERING.
8. NUMBER AND CONFIGURATION OF REBOILERS AND ASSOCIATED INLET/OUTLET PIPING IS TO BE FINALISED DURING DETAILED ENGINEERING BASED ON VENDOR DETAILS. DESIGN OF ADDITIONAL FRAMES TO BE IDENTICAL WITH THE DRAWINGS TO BE DEVELOPED DURING DETAILED ENGINEERING.
9. ALL DRAINS IN AMINE SERVICE SHALL BE ROUTED TO OPEN TUNDISH CONNECTED TO AMINE SUMP SYSTEM. DRAINIING TO SUMP SHALL ONLY OCCUR ONCE SYSTEM IS DEPRESSURED.

HOLDS:

NO.	DATE	REVISIONS	BY	CHK	APPR
000	07/17/20	ISSUED FOR INFORMATION	MDP	MJC	MJC/ADB

Owner
U. S. DEPARTMENT OF ENERGY, OFFICE OF FOSSIL ENERGY, NATIONAL ENERGY TECHNOLOGY LABORATORY

FEED STUDY FOR CARBON CAPTURE PLANT RETROFIT

PIPING & INSTRUMENT DIAGRAM
STRIPPER REBOILERS

Contractor
BECHTEL NATIONAL, INC.

Sheet Size 594 X 841 "A1" | Scale N.T.S

JOB NO.	DRAWING NO.	REV.
26301	000-M6-CN-00150	000

Acknowledgment: This material is based upon work supported by the Department of Energy Award Number DE-FE0031848
Disclaimer: This report was prepared as an account of work sponsored by the United States Government. Neither the United States Government nor any agency thereof, nor any of their employees, makes any warranty, express or implied, or assumes any legal liability or responsibility for the accuracy, completeness, or usefulness of any information, apparatus, product, or process disclosed, or represents that its use would not infringe privately owned rights. Reference herein to any specific commercial product, process, or service by trade name, trademark, manufacturer, or otherwise does not necessarily constitute or imply its endorsement, recommendation, or favoring by the United States Government or any agency thereof. The views and opinions of authors expressed herein do not necessarily state or reflect those of the United States Government or any agency thereof.

MF-105A/B
LEAN AMINE MECHANICAL FILTER

1-CN-L255-S3E-20"
20"X18" 1-CN-L256-S3E-18" → LEAN AMINE M6-CN-00100 TO ME-107
1-CN-L258-S3E-4" → LEAN AMINE M6-CN-00180 TO MS-102
PDI 0512A (H) / PDIT 0512A
PDI 0512B (H) / PDIT 0512B
PSV 0914A — PSET = 17.69 BARG — S3E S1E — LO
PSV 0914B — PSET = 17.69 BARG — S3E S1E — LO
1-CN-L329-S3E-3/4"
1-CN-L330-S3E-3/4"
V672A (V) V741A (D) V884A V207A
V673A (V) V741B (D) V884B V207B
1-CN-L304-S1E-1" V672B
1-CN-L306-S1E-1" V673B
1-CN-L254-S3E-20"
(V) V740A LO V206A
(V) V740B LO V206B
V203A V204A
V203B V204B
UTILITY CONNECTION V205A
UTILITY CONNECTION V205B
V883A S3E S1E
V883B S3E S1E
MF-105A (NOTE 4)
MF-105B (NOTE 4)
1-CN-L255-S3E-20"
1-CN-L305-S1E-1"
PI 0510 / PI 0510 V671
1-CN-L254-S3E-20"
1-CN-L303-S1E-1"
1-CN-L253-S3E-20"
V199A
V199B
(D) DRAIN XW-001
FV 0508A S1E S3E
FIC 0508A
1-CN-L762-S3E-10"
V201A (D) V828A FO 8" V828B (D) V200A
V202A
1-CN-L239-S1E-10"
FI 0508A FIT 0508A FE 0508A
V670A V670B
FV 0508B S1E S3E
FIC 0508B
1-CN-L763-S3E-10"
V201B (D) V882C FO 8" V882D (D) V200B
V202B
FI 0508B FIT 0508B FE 0508B
V670C V670D
LEAN AMINE MIN FLOW M6-CN-00120 TO T-103
1-CN-L173-S1E-10"
TI 0500A (H) TE 0500A
TI 0500B (H) TE 0500B
LEAN AMINE M6-CN-00120 FROM T-103
1-CN-L140-S1E-30"
1-CN-L251-S1E-30"
V197A S3E S1E
V197B S3E S1E
PI 0502A PIT 0502A V681A S3E
PI 0502B PIT 0502B V681B S3E
HS 0504A PI 0506A V669A
HS 0504B PI 0506B V669B
V198A
V198B
PP 0503A V680A
PP 0503B V680B
PY
V668A 1-CN-L298-S1E-1"
V668B
1-CN-L376-S3E-30"
1-CN-L377-S3E-30"
MP-105A (NOTE 4)
MP-105B (NOTE 4)
(NOTE 5)
1-CN-L380-S3E-1"
1-CN-L382-S3E-1"
V879A S3E S1E
V879B S3E S1E
V880A S3E S1E
V880B S3E S1E
1-CN-L299-S1E-1"
1-CN-L302-S1E-1"
1-CN-L297-S1E-1"
1-CN-L300-S1E-1"
1-CN-L301-S1E-1"
(D) DRAIN XW-001

MP-105A/B
LEAN AMINE PUMP

NOTES:
1. FOR SYMBOLS AND LEGENDS SEE DRAWINGS M6J-YA-00001 THROUGH M6J-YA-00005.
2. ALL LINES, VALVES, EQUIPMENT, AND INSTRUMENT NUMBERS ARE PREFIXED WITH "CN", UNLESS NOTED OTHERWISE.
3. ALL VENTS, DRAINS AND INSTRUMENTATION ROOT VALVES ARE 1", UNLESS NOTED OTHERWISE.
4. EQUIPMENT TO BE HEAT TRACED.
5. STARTUP STRAINER TO BE REMOVED SUBSEQUENT TO PLANT COMMISSIONING. TO BE REPLACED BY COARSE STRAINER FOR NORMAL OPERATIONS.
6. CONTROL VALVE AND PSV SIZES TO BE CONFIRMED DURING DETAILED ENGINEERING.
7. GOVERNING CASE FOR PSV AND PSV INLET/OUTLET LINE SIZES TO BE CONFIRMED DURING DETAILED ENGINEERING.
8. ALL DRAINS IN AMINE SERVICE SHALL BE ROUTED TO OPEN TUNDISH CONNECTED TO AMINE SUMP SYSTEM. DRAINIING TO SUMP SHALL ONLY OCCUR ONCE SYSTEM IS DEPRESSURED.

HOLDS:

NO.	DATE	REVISIONS	BY	CHK	APPR
000	07/17/20	ISSUED FOR INFORMATION	MDP	MJC	MJC/ ADB

Owner
U. S. DEPARTMENT OF ENERGY, OFFICE OF FOSSIL ENERGY, NATIONAL ENERGY TECHNOLOGY LABORATORY

Contractor
BECHTEL NATIONAL, INC.

FEED STUDY FOR CARBON CAPTURE PLANT RETROFIT

PIPING & INSTRUMENT DIAGRAM
LEAN AMINE PUMP

Sheet Size	Scale	
594 X 841 "A1"	N.T.S	
JOB NO.	DRAWING NO.	REV.
26301	000-M6-CN-00170	000

Appendix B: Cold Eye Review Discussion Record

Review Dates

September 17, 2020

September 21, 2020

Participants

Name	Entity	Role
Bill Elliott	Bechtel	Principle Investigator
Vinay Singh	Bechtel	Project Engineer
Martin Curtis	Bechtel	Process Engineer
August Benz	Bechtel	Process Consultant
Camila Bauer	Bechtel	Scribe
Kameron Flournoy	Bechtel	Scribe
Kunlei Liu (KL)	University of Kentucky	Process Consultant
Jon Gibbins	University of Sheffield	Process Consultant
Stavros Michailos	Univeristy of Sheffield	Process Modeler
Des Dillon	EPRI	Process Consultant
Adam Berger	EPRI	Process Modeler
Abhoyjit Bhown	EPRI	Process Consultant
Yang Du	EPRI	Process Modeler

Abbreviations

BR&E	Bryan Research & Engineering
CCP	Carbon Capture Plant (interchanges with PCC)
CCPP	Combined Cycle Power Plant
CCS	Carbon Capture and Sequestration (interchanges with PCC)
CCSI	Carbon Capture Simulation Initiative
CTG	Combustion Turbine Generator
CV	Close Valve
CW	Cooling Water
DCC	Direct Contact Cooler
dT	delta T (Temperature)
EHx / HX	Heat Exchanger
FC	Flow Control
FEED	Front-End Engineering Design (Study)
HETP	Height Equivalent to a Theoretical Plate
HRSG	Heat Recovery Steam Generator
IP	Intellectual Property
KL	Kunlei Liu (Process Consultant)
LC	Level Control
LP	Low Pressure (Steam)
MEA	Monoethanolamine
MW	Megawatt
NCCC	National Carbon Capture Center
NDA	Non-Disclosure Agreement
NGCC	Natural Gas Combined Cycle
P&F	Plate and Frame Heat Exchanger
PCC	Post Combution Capture (Plant)
PFD	Process Flow Diagram
PHE / P&F	Plate and Frame Heat Exchanger
TC	Temperature Control
TDS	Total Dissolved Solids
UK	United Kingdom
VLE	Vapor Liquid Equilibrium
VOC	Volatile Organic Compounds

SESSION 1: September 17, 2020

Cold Eye Review Log - Board of Technical Consultants and Bechtel			
	Comment	**Comment raised by:**	**Bechtel Comment**
1)	UK did a sensitivity study and Aspen simulation for its 10 MW Unit design and found that without the second stage fogger the sensible heat to the absorber is minimum and there is not much impact on the absorber bottom rich amine temperature. Also, temperature control is being used and since there will be some lag time, it may result in some liquid carry over to the absorber.	KL	A temperature rise occurs through the blower. That rise is the basis of the secondary fogger. Secondary fogger was put in to minimise the temperature since we are already on the high side.
2)	Heat for semi-lean is coming from the CO2 compression. What are the implications of low load or turn-down since there will be less CO2 and less heat?	Des	Provided the compressors are running we will still raise some steam and we can run the semi lean system. Semi-lean system can be shutdown without significant impact on process efficiency. Lower loads would result in higher removal rates in absorber as well. Also, at low flue gas loads, we can increase lean amine flow without inducing flooding.
3)	The Mongstad data is experimental data as you put it in excel file. Considering the carbon loading of their Rich obtained and the temperatures running in our simulation for Sherman plant, we will be overestimating the rich carbon loading.	KL	We want to maximize the rich Amine Loading. Essentially, the lower the overall flow we can get into the stripper the less energy we use per ton of CO2 recovered. Simulations (CCSI) indicate running at lower lean and rich loading with similar energy demand in stripper. The differences between ProMax and CCSI modified Aspen 10 simulations will be resolved during pilot testing at Sherman.
4)	The Mongstad ran rich amine temp at about 32°C and Sherman is at 52°C. The higher temperature, particulary at the bottom of the packing, can limit the carbon loading achieved. Recommend finding a way to cool the bottom section of absorber packing, or redo the simulation with lower rich carbon loading at absorber outlet.	KL	Mongstad ran rich amine temps of 32-33°C, and Sherman runs at 52°C. Peak temp in the absorber at Mongstad was 52°C, and is 60-61°C at Sherman. We have assumed oxidation rates at Sherman to be twice that of Mongstad, and have specified continuous thermal reclaiming to limit buildup of degradation products. Since MEA is such a low cost solvent, the added makeup required is more economic than added interstage coolers.
5)	Could we use direct contact cooler (DCC) instead of a fogger to bring the flue gas temperature down?	EPRI	The fogging system was used since it is more cost effective. The DCC would include the vessel, a pump, plus the power cost for the pump. We would be able to get down to about 40°C with a DCC, but would incur a CAPEX and OPEX. Capture could be reduced due

Cold Eye Review Log - Board of Technical Consultants and Bechtel			
	Comment	**Comment raised by:**	**Bechtel Comment**
			to higher temperatures and this will be determined during pilot plant operation. DCC to be considered during detailed design if removal of CO2 is limited by the temperature of the flue gas entering the absorbers.
6)	With possible use of intercooler to reduce the temperature, KL pointed out that the flue gas is saturated at 51°C and there no capacity for cooling from flue gas, and the low liquid circulation flow rate limits the effect as well. Adam pointed out that there is heat of absorption (reaction) into the solvent. When you put the intercooler in, it pushes the absorption lower in the bed and the heat of absorption released in the bottom couple of meters will create a temperature bulge before you get to the bottom.	Jon G., KL, Adam	Monitor temperature profiles in pilot plant and determine if moving the temperature bulge lower in the bed is useful.
8)	Part 2: Recommend that when verifiying models we should look at the entire column temperature profile not just input and output to see your model has any issue or not. You can do this only when you have some experimental data. If L/G is greater than 1.5, you will not see a bulge.	KL	To be evaluated during pilot testing.
9)	Part 2: You can predict the ability of packing for a particular liquid circulation but may get different results when it changes. What do the suppliers say?	KL and Jon	The two potential suppliers seems fairly confident in there advanded Carbon Capture packing for the design. Although they confirm there has been lots of pilot testing on their carbon capture packing, most has been on coal plant flue gases. Their IP's are proprietary and confidential, and we are unable to access that data.
10)	Part 2: The simulation provided is once through flashing but with the current configuration of multi stage reclaimer with pumps the recirculation is 4 times the discharge. Why have we provided pumps and what is likely to happen in this flash?	KL	The 1st and 2nd stage flashes are ideal fluid flashes. They are based on VLE, which is not affected by the circulation rate. The circulation rate for the first stage is 55,000 kg/hr. The 2nd stage has a circulation rate of 50,000 kg/hr. In an ideal fluid flash the compostition of the liquid and vapor are determined by the mole fraction not the mass fraction. Therefore you can recirculate as much liquid as you want without changing the flash. The concentration of the recirculating fluid is the same as that in the drum.

SESSION 2: September 21, 2020

Cold Eye Review Log - Board of Technical Consultants and Bechtel			
	Comment	**Comment raised by:**	**Bechtel Comment**
1)	The HRSGs have additional capacity therefore it's recommend to check if overall steam flow through the HP and IP turbines can be increased to increase the electricity generation (making up the power consumed by PCC unit) and to reduce the throttling requirement in the cross over line and minimize impact of steam extraction on the LP turbine.	KL	i) Siemens has approved the throttling regime ii) Additional steam production in the HRSGs up to the full capacity of HP section of the steam turbine remains an option to be evaluated with CCPP owner during detailed design to minimize cost of energy.
2)	Check if desuperheater in the steam line to the reboiler is necessary since in this case, the steam will change from superheated to saturated very quickly.	KL	Check skin temperature in HX reboiler P&F in detailed design after selection of the PHE supplier.
3)	Plate and frame heat exchangers are strongly sensitive to pressure and temperature differences therefore it is important to maintain/regulate that of the stream leaving the desuperheater. Important to note that temperature delta at stripper reboiler is very small. How is pressure being controlled?	EPRI - Adam Berger	We plan to use welded P&F exchangers. Desuperheater outlet temp to be well controlled. Whether additional pressure control on the condensate side of the PHE's is required, is to be addressed with the selected supplier during detailed design.
4)	Anticorrosion and/or antioxidation chemical additivies to MEA might be necessary to improve its quality and performance. Additives will be a determining factor for the order of degradation products in MEA. Temperature at absorber bottom is critical as such determines the oxygen dissolved in the rich amine. The corrosion byproduct, Fe^{2+}, in the solvent is the effective catalyst to degrade MEA in stripper. About 95% of the Oxygen coming in to the stripper (physical dissolved) will be consumed and produce Ammonia. To determine Oxygen contents in the stripper, it is recommended to measure Ammonia levels at the stripper and absorber's gas outlets.	KL	MEA additives such as antifoam may be necessary but will depend on air emissions and precursors such as catalytic effects (specially since system is being run at high temperatures). Plant designed with all stainless steel equipment to minimize degradation from soluble iron. Corrosion inhibitor injection may also be necessary. Sampling plan will be developed during detailed design and operations planning phases. The primary design baiss is that the amount of reclaiming necessary to maintain a healthy, non-foaming solvent willl be done. This is a primary determinant of the pilot plant extended operation.

Cold Eye Review Log - Board of Technical Consultants and Bechtel			
	Comment	**Comment raised by:**	**Bechtel Comment**
5)	Might not be worth pursuing 85% recovery of MEA reclamation. Metals and salts are worth recovering MEA from, but there might not be an economic justification for having 2 stages in reclaimer design given MEA is inexpensive (at $0.52/lb).	KL	No economic tradeoff was throuroughly analyzed between single and double stage but initially 2nd stage inclusion did not present significant threat to economics. Single stage reclaimer at stripper pressure with water injection might be the best alternative after thorough economic analysis is done. Results of pilot plant testing will be used to determine number of stages and final size of the reclaimer.
6)	If you use second stage on the reclaimer, Chromium may exceed the regulation limits, and flowability of slurry may be an issue.	KL	Quench water injection to reclaimer residue should ensure flowabillity of hot residue. Chromium levels will be determined during operations. Disposal as a hazardous waste is planned.
7)	In terms of testing rich loadings with higher flue gas temperatures, NCCC is setting up Natural Gas test unit and there may be a way for NCCC to synthetically heat up the flue gas before entering the MEA system and do some testing to see the impact of high temperature flue gas. This would provide better understanding on the VLE's order of magnitude.	EPRI - Adam Berger	1st Quarter, 2021 or 2nd Quarter: Will continue to communicate with NCCC team. Significant value would result from an early run at NCCC at conditions similar to those pllanned for the Sherman pilot plant.
8)	For cooling of flue gas to the absorbers, a pump around inter cooling system without a Direct Contact Cooler (DCC) was recommended similar to what NCCC did for NGCC. This brought the temperature at the bottom of absorber to 40C. Additional cooling duty in absorber will be required and packing might need to be modified to adjust for higher liquid rates and avoiding foaming.	EPRI - Yang Du	Simulations model not in agreement. Packing vendor's evaluation followed until validation in pilot unit possible. Value of intercooling on dilute flue gas from a CCPP is unclear.
9)	NCCC is scheduling MEA runs so it might be worth reaching out to them asking to modify their runs in accordance with FEED needs. *EPRI to reach out/enable discussion	EPRI - Abhoyjit Bhown	See response to #7.

Cold Eye Review Log - Board of Technical Consultants and Bechtel			
	Comment	**Comment raised by:**	**Bechtel Comment**
10)	Tray efficiency is about 20% and is considered a conservative value. There is concern on whether this conservatism accounts for flue gas operating conditions and how these might affect the efficiency of MEA modeling.	EPRI - Yang Du	Equilibrium model requires an estimate of HETP, which was taken at the conservative end of typical industry values i.e. 2m/6ft per stage. Rate-based models require a detailed understanding of the packing performance. Bechtel would typically confirm the packing performance (and height required) directly from the vendors. This data for carbon capture service is proving difficult to obtain due to vendor IP protection. HETPs will be confirmed during pilot testing. Data will then be in public domain.
11)	Semi-lean solvent could be cooled further to lower absorber bottoms temperature to achieve a similar effect to using the proposed pump-around intercooling system	EPRI - Adam Berger	1st and least cost element to be evaluated if temperature issue on rich loading ratio emerges from actual testing.
12)	System might be better optimized if semi-lean stream is leaner before returning to absorber although capital cost might intervene.	EPRI - Adam Berger	Balance steam from compressors. The semi-lean system sizing is driven by the amount of energy that can be recovered in useful from from the compression system.
13)	Given the stripper overhead is at a high enough temperature, it is recommended to further investigate heat recovery pathways available to recover energy from this stream.	EPRI - Adam Berger	Possible recovery by inclusion of an absorption chiller to cool semi-lean amine. Potential option if pilot plant data indicates cooling in the absorber is required.
14)	There is concern about the vent gases leaving the reclaimer skid entering the absorber, affecting its performance and threatening the plant's emissions.	EPRI - Des Dillon	Introduce vent gases stream at the bottom of the absorber, or right below the water wash, or into the flue gas duct. To be addressed after final decision on whether to go with 2 stage on a single stage reclaimer.
15)	Recommend to add an activated carbon filter skid to handle vent gases from reclaimer that are currently entering the absorber.	EPRI - Adam Berger	Leave space and test gases during pilot plant operation, if possible. (See responde to #14)
16)	Recommend EPRI to consult commercial operation such as MHI with Boundary Dam for obtaining the difference between pilot-scale amine degradation to actual degradation.	KL	Not possible; NDA's in force.

Cold Eye Review Log - Board of Technical Consultants and Bechtel			
	Comment	**Comment raised by:**	**Bechtel Comment**
17)	Recommend to use soluble iron concentration to estimate corrosion rates that should be targeted for construction material selection and if needed, adjust reclaimer flow rate to maintain soluble iron below 15 or 10 ppm.	KL	Use stainless steel coupons, 2507 and hastelloys during pilot plant extended operation.
18)	Recommend to obtain flue gas from the auxiliary boiler versus from the HRSG stack for pilot plant.	KL	We plan to use power plant stack gas from HRSG to ensure pilot plant runs on truly representative flue gas feed.
19)	When designing Pilot Plant size, there are two main items to be considered. One is defining the column internals; packing should be at least 1 m to ensure proper liquid distribution. The second is the size and configuration of heat exchanger. The combination of scaling up both the column internals and the HX, will allow extrapolating over a greater scale.	KL	Agreed. Also producing enough degradation for long enough to allow piloting of reclaimer.
20)	Important to choose Pilot Plant location based on reliability and availability of flue gas to avoid frequent Pilot Plant start and stops.	EPRI - Des Dillon	Possibly the new reality. Test lean storage and restarts in pilot.
21)	DOE is funding new pilot plant facilities - recommend to consult DOE to run MEA testing in their new facilities as a benchmark for it to provide results benefiting the FEED study and the rest of the scientific community. *EPRI to reach out/enable discussion	EPRI - Abhoyjit Bhown	Follow up with NETL and DOE HQ fossil group w/EPRI

Comments Via Email

Cold Eye Review Log - Board of Technical Consultants and Bechtel					
	Document Number	**Subject/ Doc Title**	**Original Comment from Reviewer**	**Comment raised by:**	**Bechtel Response**
1)	M5-CY-00001	Rich & Lean Amine Storage PFD	The Amine Return stream is not shown on CN-00002. Is this the equalization?	EPRI - Des Dillon	The connector flag on CY-00001 should be from CN-00001 not CN-00002. The sump is the Waste Amine Sump which collects amine drains.
2)	M5-CN-00006	Amine Reclaimer PFD	Vent gases (stream 606) does not show up in T-101. Condensate stream from KO drum does not go into MT-102 in M5-CY-00001.	EPRI - Des Dillon	The reclaimer vent gas KO drum products do not show up on connecting PFDs CN-00001, CN-00002 and CY-00001 yet. The second stage reclaimer flash is a recent addition.
3)	M5-CN-00006	Amine Reclaimer PFD	Vessel for vent gases leaving second stage has no title. KO drum?	EPRI - Des Dillon	The third drum on CN-00006 is the vent gas KO drum. We do not normally number and name the equipment in a package, though it would add clarity and consistency to add Vent Gas KO.
4)			Regarding the reboiler operability– the LP stream is at 135degC and the lean solvent inlet at 129degC and exit at 131degC	KL	The supply pressure of LP steam is constrained by the take-out point in the gas turbine. We do have vendor quotes for these from AlfaLaval and Tranter. But the higher the pressure LP steam we can get at the reboiler the better.
5)			The feeding location of semi-lean to absorber – the 2nd stage may not be appropriate. I would suggest to conduct a sensitivity study on the feeding locations, such as 3rd or 4th stage if not yet	KL	We did look at the semi-lean amine point but found that it made little difference so we left at stage 2. The absorber constraint seems to be achieving the rich amine loading per your next point (#6).
6)			The rich loading of C/N=0.475 may not be achievable at CO2 partial pressure <4kPa; the experimental data we obtained from our 0.7 MWe pilot plant with 40 ft packing and 12kPa CO2 partial pressure is around 0.48 of C/N	KL	Yes, the rich amine loading is very tight. ProMax reports 95% rich amine approach. Our view is that the Ideal Stage mode with TSWEET kinetics should be OK here but the packing requirement per stage may increase. We have an ongoing discussion with BR&E about the impact of this on their Mass & Heat Transfer model which is meant to predict packing height. In general they consider that their model works well at low pressures since it is used for tail gas treating units,

Cold Eye Review Log - Board of Technical Consultants and Bechtel					
	Document Number	**Subject/ Doc Title**	**Original Comment from Reviewer**	**Comment raised by:**	**Bechtel Response**
					which also operate at very low pressures. We do not have a clear answer from them when considering high rich amine loading at the same time. Pilot testing is required at the 4kPa level.
7)			Please provide the water balance for amine loop.	KL	<u>Amine water balance</u> 73000kg/h water recovered from the stripper is returned to amine. 3000kg/h water recovered from CO2 compression together with 19000kg/h imported water is routed to secondary fogger (feed gas at dewpoint) and wash water The gas stream out of the amine section to wash water section has 77000kg/h more water than inlet to absorber. 80000kg/h excess water from the wash water cooling is routed back to amine Loss from amine= 73000kg/h excess stripper overhead condensate 3000kg/h CO2 77000kg/h evaporation in amine absorber Return to amine= 73000kg/h = excess stripper overhead condensate 80000kg/h = excess water from the wash water cooling.
8)			I have studied your reboiler datasheet, have you generated a reboiler operating curve – the properties of stream 319 via energy input to ME-110A-H? Assuming a amine feeding stream (Stream 318) as constant (mass flowrate, carbon loading and temperature). is there enough	KL	We have prepared a curve of thermal and physical properties for the reboiler temperature operating range. At partial loads, we can take one or more reboiler units out of service to maintain design flow rates through the remaining operating reboilers. Refer to Bechtel Reboiler datasheet M5D-CN-00053,

Cold Eye Review Log - Board of Technical Consultants and Bechtel					
	Document Number	**Subject/ Doc Title**	**Original Comment from Reviewer**	**Comment raised by:**	**Bechtel Response**
			hydralic drive force for reboiler operated at partial load at current design – once throuh and plate-frame confirguation?		which has the boiling curves easily extractable from the simulation.
9)			I understood those stream tables were generated using Aspen, it still surprised me that the water carry capacity in the Stream 103 and 203 (95929 kg/hr of water at 49.29 degC and total mass flow of 1237510 kg/hr) is higher than Stream 100 (91809 kg/hr of water at 50.99degC and total mass of 1297930 kg/hr) unless the Stream 100 is under-saturation.	KL	Note that stream 103 is at lower pressure than stream 100 (1.007 vs. 1.087 bara).
10)			The design basis stated that the Sherman plant is often operated at 1x1x1 configuration, what is the LP steam parameters at this partial load, particularly, the steam pressure at cross-over pipe?	KL	Based on the existing heat balances for Sherman power plant, for 1x1x1 operation with GT at full load, unfired case, and at max summer ambient of 100°F, the LP turbine inlet pressure is 28.67 psia and temperature 556.2°F. This pressure is lower than what is required at the reboiler. Siemens will install a back pressure valve on the cross over pipe and make adjustments so the IP exhaust pressure for this operating scenerio increases to 61.50 psia. Steam temperature will increase to 735.8°F.
11)			Install bypass around heat exchangers to control the process stream for desirable temperature will be more effective compared to control the cooling water flowrate	KL	Wash water cooler. This is possible. It would be best to locate the existing wash water flow CV inside the bypass to ensure adequate pressure drop for the bypass CV at lower wash water flows through exchanger. Lean amine cooler. Our simulations show very little impact of lean amine temperature on the absorber temperatures below the first stage so we would expect to set the TC at a low temperature (say 40 deg.C) and have the CW valve normally fully open. Bypass is

Cold Eye Review Log - Board of Technical Consultants and Bechtel					
	Document Number	**Subject/ Doc Title**	**Original Comment from Reviewer**	**Comment raised by:**	**Bechtel Response**
					probably not required. Overhead Stripper Condenser. It would be good to not control CW flow to avoid higher surface temperatures and CW scaling on reduced flow/duty, but a process side bypass would bypass steam to mix with condensed water after condenser. In that case it would make sense to move the TC to a more stable position, say on the reflux stream, though this would introduce a delay.
12)			Operated stripper bottom at 131 oC could generate two unintentional consequences (1) super high MEA degradation rate via thermal degradation with the presentence of dissolved oxygen; we have observed an exponential relationship between degradation rate and temperature; and (2) less operation ability of reboiler to response the fluctuated LP stream pressure. Regarding the degradation, the build-up of dissolved iron in the solvent is the key. I would recommend to consider what happened at Boundary Dam plant compared Cansolv's pilot-plant data.	KL	We concur that thermal degradation is increased by running the stripper at 2.6 bara and 131C. We have therefore designed for twice the quantity of degradation products produced per mol of MEA compared to the 2015 pilot plant operating results reported for Mongstad, as is documented in the design calculation for the reclaimer. Per table 1 attached to the design calc, Mongstad ran 30% MEA solvent vs. 35% for Sherman and ran their stripper bottoms at 119-121C. Further, Mongstad used 2.96 bara steam at 133C, while Sherman uses 3.13 bara steam at 135C. So, bulk solvent temp in the Sherman stripper is about 10C higher than Mongstad, but the Sherman reboiler film temperatures should be only 3-5C higher. In addition, stripper system volumetric holdup as a percent of total solvent holdup at Sherman is roughly 30% less than Mongstad. Regarding oxygen content, Sherman feed gas is slightly lower than Mongstad plus the hotter Sherman absorber will reduce dissolved O2 in the rich amine. Our ProMax simulation shows zero O2 in the stripper reboiler inlet but there is, of course, some O2 in the stripper top section. For all these reasons, we felt that doubling the thermal degradation products and Heat Stable Salts at Sherman, compared to Mongstad, would be a reasonable basis for design.

Cold Eye Review Log - Board of Technical Consultants and Bechtel					
	Document Number	**Subject/ Doc Title**	**Original Comment from Reviewer**	**Comment raised by:**	**Bechtel Response**
					We would like to discuss further during our conference call on Thursday. We agree that iron will build up in the solvent, and may catalyze thermal degradation. We assume the reclaimer will remove iron, and we try to limit iron buildup by; • specifying alloy materials • specifying low iron/low chlorine MEA makeup • reducing average amine residence time at temperature (even though our stripper temps are roughly 10C higher than a typical MEA plant (Mongstad), our high temp holdup is relatively low • designing the reclaimer to process the entire solvent inventory in 28 operating days, while Mongstad ran 78 days before starting reclamation. We assumed 200% thermal degradation rates compared to Mongstad, and we expect this will be enough to run with reasonable overall MEA losses. If, however, we encounter, say, 300% degradation rates compared to Mongstad, the reclaimer is designed with 20% excess heat exchange surface which should still allow us to run on the same 28-day cycle, producing an additional 80-120 kg/hr of residue and recovering less MEA. We are unclear on how to further 'consider' the Boundary Dam/Cansolv experience into our Sherman design since detailed data is not in public domain.
13)			The use of C/N =0.475 could result in an undersized unit, particularly absorber. The absorber could be flooded if any high solvent circulation is required.	KL	The liquid loading can increase 20% without impact on the absorber flooding.

Cold Eye Review Log - Board of Technical Consultants and Bechtel					
	Document Number	**Subject/ Doc Title**	**Original Comment from Reviewer**	**Comment raised by:**	**Bechtel Response**
14)			Suggest to design the CO2 compressor for the lowest operating pressure of Stream 400 during the partial load operation	KL	There is a limit to the suction pressure on the machine. We need to achieve supercritical conditions after 3 stages while being limited by the inlet temperature to 2nd and 3rd stage by the cooling water temperature. The compressor suction pressure should be controlled within limits with the first stage recycle flow – though further development of the flow scheme is required to avoid conflict with the column pressure control.
15)			Suggest to run a few cases covering partial loads with focusing on the impact of LP steam parameters on CCS operation and CCPP steam turbine performance.	KL	At partial loads or during single CTG operation, the backpressure valve will maintain sufficient LP steam pressure at reboiler. LP steam temperature will be higher at this time, but this is desuperheated prior to the reboiler, so will not impact CCP operation.
16)			Dual-stage reclaimer is a good idea if fouling/scaling insider the 2nd-stage heat exchanger can be avoided. Suggest to use nitrogen or air as stripping gas for low pressure stage to reduce the a liquid temperature entering the flashing column. Is Aspen simulation for reclaimer available for review? My understanding is there will be sodium salts precipitation. We did observed solid in our reclaimer sludge when we operated our reclaimer at 0.7MWe scale.	KL	We were concerned about fouling/scaling in the reclaimer flash heat exchangers, both 1st stage and 2nd stage. We have specified these exchangers as forced circulation, high velocity reboilers with solvent in the tubes, rather than kettle-type exchangers which foul and scale much faster. It appears that Mongstaad also used a forced circulation reboiler. The reclaimer exchangers are specified to be readily accessible to allow mechanical tube cleaning. The reclaimer system is sized to provide one day of standby time per week to allow for draining and flushing and occasional mechanical cleaning. Regarding using air or nitrogen as stripping gas, we believe it is more cost effective to use water injection to the 2nd flash drum. The selected 2nd stage water injection rate gives overall 90+% MEA recovery in the reclaimer system and produces a flash vapor condensate of roughly 35 wt% MEA which can be directly sent to the lean amine tank. We agree that the small nitrogen purge shown as

Cold Eye Review Log - Board of Technical Consultants and Bechtel					
	Document Number	**Subject/ Doc Title**	**Original Comment from Reviewer**	**Comment raised by:**	**Bechtel Response**
					added to flash condenser feed could readily be injected directly into the 2nd flash drum, but it would not significantly impact the flash results since the nitrogen represents only a little over 1% of the water injection on a mol basis. We do have a new and complete Aspen simulation of the reclaimer system, which we will forward to you. This simulation shows slightly improved MEA recovery (92% vs 90%). We are hopeful that the high rate forced circulation reboil system will maintain any salts in suspension and allow continuous operation without plugging or excess scaling or fouling. Degradation rates and precipitation concerns for Sherman can be clarified during the planned pilot test program which we will propose in our FEED report. As detailed in the reclaimer calcs and datasheet, the recirc rate for both flashes is set to give 3 wt% vaporization in the flash drum.
17)			Suggest to cool Stream 100 and 200 to minimize the potential water built-up in the amine loop	KL	Stream 100 and 200 (cooled flue gas) are cooled to their dewpoint by fogging. Additional equipment would be required for further cooling)
18)			Suggest to separate the amine makeup for solvent quality and water makeup for columns liquid level. Currently lean amine tank (MT-102) does both.	KL	Agree. As the design has progressed, the way the simulation is configured no longer reflects the optimal water balancing. Water balance is pending a new revision. The stripper reflux water surplus should be routed directly to the lean amine return stream to absorber. The water from CO2 compression straight to absorber wash water circuit as it is clean. This will CO2 flashing in process water tank and dilution of lean amine tank

Cold Eye Review Log - Board of Technical Consultants and Bechtel					
	Document Number	**Subject/ Doc Title**	**Original Comment from Reviewer**	**Comment raised by:**	**Bechtel Response**
					contents. The demin/distillate water make-up required will then go to the process water tank to provide the secondary fogger water and remaining wash water circuit top-up. The result is shown in attached sketch -FUTURE However this change affects a number of recycle loops and requires reconfiguring the simulation.
19)			How is the reboiler condensate return integrated with CCPP steam cycle? Suggest to feed CCS steam condensate after FW1 or FW2 so no flash is needed. For your corrent configuration, approximate 10% condensate will be flash to vapor.	KL	All LP condensate, including condensate from the reboiler, is returned to the CCPP condenser. The condensate is at very low pressure and alternate uses/routings would require installing a flash drum, flash vapor condenser and flashed condensate pumps in the CCP. Capital investment is unlikely to be justified.
20)	M4C-CN-00001	Simulation Basis	1. VOC emission from absorber MEA emissions are 11.7ppm wt against CCPP VOC emission limit of 4ppmvd @ 15% O2	KL	Further to VOC emission from absorber, when emission is 5.2% on a dry basis at 12.5%O2 then at 15% O2 it will be 5.2 (20.9-15)/(20.9-12.4) = 3.61 which is less than 4ppm. This appears very close or even above the specification. That said the wash water scheme is currently basic and there are options to improve performance should that be necessary or desired.
21)	M5-BA-00001	Blower & Quench Section PFD	Potential scaling on the blower due to high TDS in the cooling tower blowdown. Suggest to move after MS101B/C or combine AB/AC. A few degree of F increase by MA-101/102 is not a big deal for absorber at all.	KL	There is a risk of this and some design precautions need to be adopted – e.g. demisting. Review of lessons learned on Petro Nova on blade/blower design, where there was scrubber water carry-over. Initially the system will use distillate drom CCPP ZLD system for primary fogger. The secondary fogger was installed purely to take out the extra heat from the blower.
22)	M5-CN-00001	Absorber T-101	1. Need to control the circulating water for a set point (new installed on the circulating water line) rather cooling	KL	1. The proposed design controls recirculating wash water flow in order to assure proper liquid-to gas ratio (L/G) in water wash packed section. The

Cold Eye Review Log - Board of Technical Consultants and Bechtel					
	Document Number	**Subject/ Doc Title**	**Original Comment from Reviewer**	**Comment raised by:**	**Bechtel Response**
			water for better absorber exhaust T control and water flooding due to low T compared to the Stream 100 2. Location of control valve on semi-lean amine 3. Use Stream 103 TC control the flow rate 4. Minimum flue gas flowrate is required to avoid washwater leak to amine loop for current design 5. Control signal to Excess Amine Storage: This control signal should tie with makeup water, not from MT-102. There should be another signal to control the amine makeup to maintain the targeted amine concentration.		water wash section should reach thermal equilibrium readily since cold wash water enters at 37.6C to cool off-gas to 48C, a ten-degree delta T. 2. Semi-lean amine control valve is located at grade near absorber column. Semi-lean amine is cooled to about 57C, so is well below its flash point. 3. Stream 103 (absorber off-gas) temperature is controlled by throttling cooling water to ME-101 rather than throttling wash water flow. 4. The Absorber water wash section has a total draw pan below the packed wash section, so wash water will not leak into amine absorption section even at low or zero flue gas rates. Excess wash water make is sent to the lean amine stream to utilize the recovered amine. The flow rate of water makeup to the wash water system (stream 107) is set by the control room operator at a rate which ensures that the amine level in the recirculating wash water is in the range of 1-2 wt% in order to control losses of amine to the atmosphere. 5. Liquid level in the absorber is maintained by adding fresh lean amine from tank MT-102 or by diverting excess lean amine to the tank. Water level in the lean amine is controlled by the 3-element control system.
23)	M5-CN-00003	Lean Amine Cooling PFD Sheet 1/2	1. Rich Amine mechanical filter: Could be a problematic item – pressure drop/leak source. In the other hand, particle doesn't hurt at all 2. Lean Amine Cooler: Suggest to control the amine side – with bypass rather than control the cooling water	KL	The only way to detect is testing the cooling water. Intention is that PHE in amine service are welded not gasketed to minimize risk. Detection of amine leaks would be a lab test. Focus should be on avoiding the situation of having or being concerned about regular amine leaks in the first place.

Cold Eye Review Log - Board of Technical Consultants and Bechtel					
	Document Number	**Subject/ Doc Title**	**Original Comment from Reviewer**	**Comment raised by:**	**Bechtel Response**
			3. Regarding the amine leak to cooling water, due to high TDS in the cooling water, measuring the conductivity is not sufficient unless a serious leak occurred. Below are a couple of approaches which we have deployed in our 10 MWe PCCC design: (1) For the liquid-liquid EHx, relocate the EHx or modify the process to operate the amine stream at low pressure compared to cooling water stream (2) For the gas-liquid EHx, installing a T with level indicator at cooling water outlet to detect the gas leak.		Most experience with PHE is that either you will experience no problems or chronic problems. Gasketed PHE are more difficult to get right, so use should be limited to services where leakage is tolerable. We are proposing to use welded PHE for amine services. With welded PHE problems are related to either a) poor construction due to vendor inexperience/ability – due to high cost of PHE there are financial pressures to go with the cheapest offer b) failure of tried and tested methods of construction being applied to variation from tested design – this affects even the most reputable vendors, so it is important to get experience list of same PHE units in similar service. (note - In amine service due to relatively low temperatures and pressures would not expect a concern from process upsets).
24)	M5-CN-00004	Lean Amine Cooling PFD Sheet 2/2	1. FC before Semi-Lean Amine HX: Move this FC to semi-lean cold outlet before the spilt of Stream 105 and 205. Install a FC on either of Stream 105 or Stream 205 for controlling the distribution of semi-lean to two absorbers. 2. Valve before Semi-Lean Amine Flash Drum: suggest to move this valve to the front of ME-109 to increase the vapor content in the Rich Stream for relative higher dT	KL	To be considered in detailed design
25)	M5-CN-00005	Stripper PFD	1. Control Signal: Not sure why we need the input from lean amine flow to T101/T102 here 2. Control Signal: Not sure this signal is needed to control stripper LC. The	KL	To be considered in detailed design

Cold Eye Review Log - Board of Technical Consultants and Bechtel					
	Document Number	**Subject/ Doc Title**	**Original Comment from Reviewer**	**Comment raised by:**	**Bechtel Response**
			split is set by control valve in the Stream 311. 3. Lean Amine Mechanical Filter: no need here TC Control in Overhead Stripper Condenser: is this TC control necessary?		
26)	M5-CN-00006	Amine Reclaimer PFD	1. Pump 600 & 601: could this result scaling/fouling? 2. Nitrogen stream: use N2 as stripping gas could reduce the water/steam injection	KL	Reclaimer circ pumps should not induce fouling per se. Fouling in the heat exchangers is reduced by high velocity in HX tubes. HX tubes can be mechanically cleaned if fouling occurs. Water injection is considered more cost effective than nitrogen strippping.
27)	M5-CY-00001	Rich & Lean Amine Storage PFD	1. Lean Amine Solvent Storage Tank: not sure adding water through this makeup tank is a good idea 2. Rich Amine Tank: Separate pump may need for easy control 3. FC after lean amine pump: not follow why a FC is installed here	KL	To be considered in detailed design
28)	M5-QG-00001	Compressor and Drying Section Sheet 1/2	1. Compressor: suggest to design the compression train with lowest pressure of Stream 400 2. Stream 519: how to prevent leakage here – high risk	KL	To be considered in detailed design
29)	M5-QG-00002	Compressor and Drying Section Sheet 2/2	1. Stream 521: suggest to use rich amine stream	KL	To be considered in detailed design
30)	M5-SC-00001	Condensate Steam and BFW Water	1. Stream 544: suggest to use condensate return for steam desuperheating. Actually, there is no	KL	To be considered in detailed design

Cold Eye Review Log - Board of Technical Consultants and Bechtel					
	Document Number	**Subject/ Doc Title**	**Original Comment from Reviewer**	**Comment raised by:**	**Bechtel Response**
		Distribution Systems PFD	need to do the saturation due to boiling status inside stripper and reclaimer		
31)	M5-WL-00001	Cooling Water System PFD	1. Stream 510: Which one has high process fluid pressure than cooling water – how to detect the leakage of amine to cooling water? 2. Detecting and Monitoring the leak from amine loop to cooling water should be considered	KL	See response to #23.
32)			Not sure if process optimization is in the scope of this FEED study, but if so, the rich solvent bypass/split configuration may be worth trying. It is simpler than the current semi-lean configuration and thus lower capital cost, but may be more efficient (based on several works done by UT Austin and CSIRO for MEA and my experience with some other solvents, I would expect it drops the heat duty from ~3.6 to ~3.2). The configuration is as follows (I have also attached the paper which has some high-level capital cost information). As you can see it only needs a bypass line before the cross exchanger. The major drawback of this configuration is that it would need a bit more packing in the stripper. As the current stripper is oversized, this may be also a good way to take advantage of this tall stripper. As for the optimum bypass ratio and second feed location, my guess is 20-40% and 1/3 to middle of the stripper.	EPRI - Yang Du	We do not intend to further optimize the main scheme at this stage, but it is true that it does not take advantage of usable heat in the stripper overheads. The scheme below looks to be a workable alternative to the semi-lean system and as you point out there is likely margin in the current proposed stripper design to accommodate its impact. We currently route 20% of the rich amine to the semi-lean system and achieve a 10 deg.C approach in the main rich/lean amine exchangers. Pushing this approach to the minimum of 5 deg.C, would probably allow up to 25% of the rich amine through the condenser split without compromising the heat recovery in the main amine loop. Presumably the temperature of the rich amine out of the condensers is still cool enough to make use of the IP steam generated at the compressors as well?

Cold Eye Review Log - Board of Technical Consultants and Bechtel					
	Document Number	**Subject/ Doc Title**	**Original Comment from Reviewer**	**Comment raised by:**	**Bechtel Response**
			Thanks very much for the explanation, Martin. I noticed the current stripper overhead is pretty hot, ~110 C, and the heat seems not get recovered. If I remember correctly, in those bypass configurations, people can get 70-90 C at the stripper top. As it does not require additional equipment, maybe it is something we can try during future pilot plant testing.		
33)		Absorber packing height:	Is there any NG flue gas MEA solvent pilot plant that can achieve ~85% CO2 capture when the packing height, CO2 lean loading and L/G are similar to the Sherman case (Height = 10m, lean loading = 0.25, and L/G=1). If not, is that possible to ask TCM to run such a case in the near future?	EPRI	To be considered in detailed design
34)		DCC:	1. Why do we need two stages of DCC (water fogger system)? 2. Do we need a LC for the DCC (water fogger system)? 3. There is a liquid outlet stream (004B) in the first stage of DCC, but not in the second stage, does that mean all the water goes into the flue gas in the second stage DCC?	EPRI	1. 2nd stage for heat pickup in blower 2. No LC required 3. Yes
35)		Reboiler temperature:	Why did Kårstø choose to run the stripper at ~130C ? Any concerns about MEA degradation? Any MEA pilot plants operated at this high stripper temperature?	EPRI	The Karsto stripper temp was set by stripper pressure, amiine loading and amine strength. Amine degradation rates at Sherman are prorated based on Mongstad results. There is limited pilot data on high stripper temp operations.

Cold Eye Review Log - Board of Technical Consultants and Bechtel					
	Document Number	**Subject/ Doc Title**	**Original Comment from Reviewer**	**Comment raised by:**	**Bechtel Response**
36)		Reclaimer	1. "Considering we expect degradation rates to double for a 8.5 to 10 degree Celsius rise, a reasonable estimate for Sherman's thermal degradation rate would also be twice Mongstad's, or 0.394 wt%/d of MEA inventory. " Is this assumption based on the results from some MEA pilot plants at different temperatures, like 100 C, 110 C and 120 C, or based on a certain lab test? I am not aware of many lab tests about MEA degradation at above 120 C, except for one from UT Austin which gives an activation energy of 121KJ/mol or 2.7 times of degradation rate for 10 oC temperature increase). (https://doi.org/10.1016/j.egypro.2009.01.045) 2. In the "Reclaimer flash exchanger heat duties", the heat of CO2 absorption is assumed to be 80kJ/mol. Based on NTNU's data (https://doi.org/10.1016/j.egypro.2014.11.154), the value at this high temperature and lean loading should be at least 100 kJ/mol. But as the major heat duty in the reclaimer is for water evaporation, the	EPRI	Degradation rates for Sherman are assumed, prorated as twice those experineced at Mongstad. Sherman degradation rates will be confirmed during pilot testing.

Cold Eye Review Log - Board of Technical Consultants and Bechtel					
	Document Number	**Subject/ Doc Title**	**Original Comment from Reviewer**	**Comment raised by:**	**Bechtel Response**
			change of H from 80 to 100 is negligible for the total heat duty (1-2%).		
37)		Semi-lean solvent and the stripper overhead:	1. Why isn't the semi-lean solvent chilled similar to the lean solvent trim cooler? 2. How was the semi-lean solvent circulation rate optimized? Were lower flash pressures or 2 stage flashes considered? 3. The stripper overhead heat (at 110 C) is not recovered. Is there a pinch analysis that shows this would not be usefully integrated or is the cost of heat recovery too high?	EPRI	Semi-lean system design based on minimum capital investment possible and still use the waste heat from the compression cycle.

Appendix C: ESD-PSD Cause and Effect Diagram

BECHTEL NATIONAL Inc.

FEED STUDY FOR CARBON CAPTURE PLANT RETROFIT

CAUSE & EFFECT DIAGRAM

Acknowledgment: *This material is based upon work supported by the Department of Energy Award Number DE-FE0031848.*

Disclaimer: *This report was prepared as an account of work sponsored by an agency of the United States Government. Neither the United States Government nor any agency thereof, nor any of their employees, makes any warranty, express or implied, or assumes any legal liability or responsibility for the accuracy, completeness, or usefulness of any information, apparatus, product, or process disclosed, or represents that its use would not infringe privately owned rights. Reference herein to any specific commercial product, process, or service by trade name, trademark, manufacturer, or otherwise does not necessarily constitute or imply its endorsement, recommendation, or favoring by the United States Government or any agency thereof. The views and opinions of authors expressed herein do not necessarily state or reflect those of the United States Government or any agency thereof.*

											Document Number	
											BECHTEL: 26301-000-J4-JD-00001	
											OWNER : NOT USED	
										Rev	**Job Number**	**Page**
	0	07-Aug-20	ISSUED FOR INFORMATION	MDP	MJC	MJC/ADB						
	Rev	**Date**	**Description**	**BY**	**CHKD**	**APPD**					**26301**	**1** of **2**

Disclaimer: This report was prepared as an account of work sponsored by an agency of the United States Government. Neither the United States Government nor any agency thereof, nor any of their employees, makes any warranty, express or implied, or assumes any legal liability or responsibility for the accuracy, completeness, or usefulness of any information, apparatus, product, or process disclosed, or represents that its use would not infringe privately owned rights. Reference herein to any specific commercial product, process, or service by trade name, trademark, manufacturer, or otherwise does not necessarily constitute or imply its endorsement, recommendation, or favoring by the United States Government or any agency thereof. The views and opinions of author(s) expressed herein do not necessarily state or reflect those of the United States Government or any agency thereof.

SAFETY SYSTEM

GENERAL NOTES:

1. This document is to be developed further during detailed engineering based on additional control logic details e.g. vendor information.

NOTES:

1. Instrument tags & P&ID number to be confirmed - Facility consists of 2 absorption trains - design of both trains to be identical, with 2nd train drawings to be developed during detailed engineering.

2. Non-essential electrical power sources such as welding and socket outlets shall be tripped to prevent the ignition probability of flammable liquids and gas leaks. These sources shall be tripped via ESD system at grouped low gas alarm in the area where the low gas alarm is detected. 2oo3 hardwired trip outputs from F&G to ESD system required for each trip.

3. Number of Fire & Gas detectors/alarms to be confirmed during detailed engineering based on fire & gas layouts.

4. Interlock to be provided to prevent surge drum (MV-106) being depressured below 9 barg to avoid risk of sublimation.

5. If MV-106 experiences low-low temperature (TI-0796) the system is to be depressurised with the compressor isolation valves (HV-0714/2516) inhibited from opening.

	CAUSE	P&ID NUMBER	TAG NUMBER	ALARM POINT AND VOTING
				P&ID Number
				EFFECT
				CENTRAL CONTROL ROOM ALARMS
				Central Control Room Action Panel
				Central Control Room DCS Alarm
				FLUE GAS
				CLOSE Flue Gas Blower MA-101 Shutoff Damper MD-034
				CLOSE Flue Gas Blower MA-101 inlet Damper PV-0035
				STOP Flue Gas Blower MA-101
				STOP Flue Gas Trim Foggers Water Supply Pump MP-109A
				STOP Flue Gas Trim Foggers Water Supply Pump MP-109B
				CLOSE Flue Gas Blower MA-102 Shutoff Damper MD-060
				CLOSE Flue Gas Blower MA-102 inlet Damper PV-0061
				STOP Flue Gas Blower MA-102
				STOP Flue Gas Primary Fogger Water Supply Pump MP-209A
				STOP Flue Gas Primary Fogger Water Supply Pump MP-209B
				STOP Waste Spray Water Forwarding Pump MP-114A
				STOP Waste Spray Water Forwarding Pump MP-114B
				AMINE
				STOP Lean Amine Pump MP-105A
				STOP Lean Amine Pump MP-105B
				STOP Flash Drum Pump MP-106A
				STOP Flash Drum Pump MP-106B
				STOP Reflux Pump MP-107A
				STOP Reflux Pump MP-107B
				STOP Lean Amine Solvent Fill Pump MP-111A
				STOP Lean Amine Solvent Fill Pump MP-111B
				STOP Amine Waste Sump Pump MP-112A
				STOP Amine Waste Sump Pump MP-112B
				CLOSE Lean Amine Outlet Shutdown Valve HV-0501
				CLOSE Lean Amine FCV (Absorber 1) FV-0530A
				CLOSE Semi-Lean Amine LCV (Absorber 1) LV-0440A
				CLOSE Lean Amine FCV (Absorber 2) (Note 1)
				CLOSE Semi-Lean Amine LCV (Absorber 2) (Note 1)
				STOP Rich Amine Pumps (Absorber 1) MP-101A
				STOP Rich Amine Pumps (Absorber 1) MP-101B
				STOP Rich Amine Pumps (Absorber 2) MP-124A
				STOP Rich Amine Pumps (Absorber 2) MP-124B
				STOP Rich Amine Inlet Shutoff Valve (Absorber 1) HV-0300A
				STOP Rich Amine Inlet Shutoff Valve (Absorber 2) (Note 1)
				WASH WATER
				STOP Wash Water Recirculation Pumps (Absorber 1) MP-102A
				STOP Wash Water Recirculation Pumps (Absorber 1) MP-102B
				STOP Wash Water Recirculation Pumps (Absorber 2) MP-104A
				STOP Wash Water Recirculation Pumps (Absorber 2) MP-104B
				STOP Absorber Make-Up Water Pump MP-119A
				STOP Absorber Make-Up Water Pump MP-119B
				STOP Waste Water Forwarding Pump MP-113A
				STOP Waste Water Forwarding Pump MP-113B
				COOLING WATER
				CLOSE Absorber 1 Wash Water Cooler (ME-101) TCV TV-1574
				CLOSE Absorber 2 Wash Water Cooler (ME-104) TCV TV-1562
				CLOSE Lean Amine Cooler (ME-102) TCV TV-1580
				CLOSE Stripper Condenser (ME-111A/D) TCV TV-1592A
				STEAM SYSTEMS
				CLOSE LP Steam Shutoff Valve HV-0808
				CLOSE LP Steam Main Drain Valve HV-0806
				CLOSE MP Steam Shutoff Valve HV-0908
				CO_2 COMPRESSION & EXPORT
				STOP CO_2 Compressor MC-103
				CLOSE CO_2 Inlet Shutoff Valve HV-0714
				OPEN CO_2 Vent Valve from MV-202 PV-0690B
				STOP CO_2 Product Sendout Pump MP-108A
				STOP CO_2 Product Sendout Pump MP-108B
				OPEN CO_2 Depressuring Valve from MV-105 XV-0779
				OPEN CO_2 Depressuring Valve from MV-106 XV-0780 (Note 4, 5)
				CLOSE CO_2 Product Shutoff Valve HV-2558
				CLOSE CO_2 Product FCV FV-2561
				CLOSE CO_2 Compressor Discharge Shutoff Valve HV-2516
				PLANT CONTROL
				REDUCE Plant Load Demand to Minimum
				F&G SYSTEM
				ISOLATE Ignition Sources (Note 2)
				Rev
				1 2 3 4 5 6 7 8 9 10 11 12 13 14 15 16 17 18 19 20 21 22 23 24 25 26 27 28 29 30 31 32 33 34 35 36 37 38 39 40 41 42 43 44 45 46 47 48 49 50 51 52 53 54 55 56 57 58 59 60 61 62 63 64 65 66 67 68 69 70 71 72 73 74
	GENERAL			
ESD	Plant ESD button is pressed	-	-	2oo3
ESD	Loss of Power to ESD system or Plant Power	-	-	2oo3
PSD	Combustion Turbine Trip	-	-	2oo3
ESD	Compressor ESD button is pressed	-	-	2oo3
	PROCESS			
ESD	LLL Instrument Air Pressure	M6-PA-00001	PI-1806A/B/C	LLL - 2oo3
PSD	Loss of Cooling Water	-	-	2x 1oo2
PSD	CO_2 Compressor trip	M6-QG-00020/0050/0090	MC-103	2oo3
PSD	HH LP Steam Temperature	M6-AB-00001	TI-0802A/B/C	HH - 2oo3
PSD	HH MP Steam Temperature	M6-AB-00003	TI-0902A/B	HH - 1oo2
	ABSORBER			
PSD	LL Absorber (T-101) bottom Level	M6-CN-00010	LI-0100B/C	LL - 1oo2
PSD	HH Absorber (T-101) bottom Level	M6-CN-00010	LI-0100B/C	HH - 1oo2
PSD	LL Absorber (T-102) bottom Level	(Note 1)	(Note 1)	LL - 1oo2
PSD	HH Absorber (T-102) bottom Level	(Note 1)	(Note 1)	HH - 1oo2
	STRIPPER			
PSD	LL Stripper (T-103) bottom Level	M6-CN-00120	LI-0620B/C	LL - 1oo2
PSD	HH Stripper (T-103) bottom Level	M6-CN-00120	LI-0620B/C	HH - 1oo2
PSD	HHH Stripper (T-103) Pressure	M6-CN-00120	PI-0628A/B	HHH - 1oo2
	CO_2 COMPRESSOR			
PSD	HH CO_2 Compressor Suction Drum (MV-203) Level	M6-QG-00010	LI-0704A/B/C	HH - 2oo3
PSD	HH CO_2 Compressor 1st Stage Interstage Knock-Out Drum (MV-104) Level	M6-QG-00040	LI-0746A/B/C	HH - 2oo3
PSD	HH CO_2 Compressor 2nd Stage Interstage Knock-Out Drum (MV-105) Level	M6-QG-00070	LI-0776A/B/C	HH - 2oo3
	CO_2 Export			
PSD	CO_2 Pipeline/Storage Issue	-	-	2oo3
PSD	HH CO_2 product O_2 Concentration	M6-QG-00080	AI-1212A/B	HH - 1oo2
PSD	HH CO_2 product H_2O Concentration	M6-QG-00080	AI-1210	HH - 1oo2
	FLUE GAS			
PSD	HH Flue Gas Temperature	-	-	HH - 1oo2
PSD	HHH Flue Gas Pressure	-	-	HHH - 1oo2
PSD	LLL Flue Gas Pressure	-	-	LLL - 1oo2
	FIRE & GAS (F&G) SYSTEM			
ESD	Isolate Ignition Sources Signal from F&G System (Note 2)	-	-	2oo3

BECHTEL

FEED STUDY FOR CARBON CAPTURE PLANT RETROFIT

CAUSE & EFFECT DIAGRAM

Document No.	
26301-000-J4-JD-00001	
Rev	00
Page	2 OF 2

Appendix D: Relief, Depressurization and Process Draining Philosophy

Relief, Depressurization and Process Draining Philosophy

FEED STUDY FOR CARBON CAPTURE PLANT RETROFIT

Acknowledgment: *This material is based upon work supported by the Department of Energy Award Number DE-FE0031848.*
Disclaimer: *This report was prepared as an account of work sponsored by an agency of the United States Government. Neither the United States Government nor any agency thereof, nor any of their employees, makes any warranty, express or implied, or assumes any legal liability or responsibility for the accuracy, completeness, or usefulness of any information, apparatus, product, or process disclosed, or represents that its use would not infringe privately owned rights. Reference herein to any specific commercial product, process, or service by trade name, trademark, manufacturer, or otherwise does not necessarily constitute or imply its endorsement, recommendation, or favoring by the United States Government or any agency thereof. The views and opinions of authors expressed herein do not necessarily state or reflect those of the United States Government or any agency thereof.*

0	15-Oct-20	Issued for Information	MJC	ADB	MJC/ADB		
Rev.	**Date**	**Reason for Revision**	**BY**	**CHKD**	**APPD**		

Bechtel National, Inc.

Job No. 26301

Document No.	**Rev.**
26301–000–30R-M01G-00002	0

PAGE 1 of 14

U. S. Department of Energy, Office of Fossil Energy, National Energy Technology Laboratory

Project No. – Originator – Disc Code – Doc Type – Serial No.

NOT USED

Contents

Section	Page
1.0 INTRODUCTION	3
2.0 PRESSURE RELIEF PHILOSOPHY	4
3.0 DEPRESSURIZATION PHILOSOPHY	10
4.0 PROCESS DRAINING PHILOSOPHY	11
5.0 CONCLUSION	13
PSV Summary	14

1.0 INTRODUCTION

This document describes the relief, depressurizing and process draining considerations made in the design of the CC Plant. Attention was paid to inherently safe design, overpressure protection, safe depressuring of high pressure supercritical carbon dioxide fluid and to ensure recovery and re-use of all water effluents and to ensure that MEA can be safely drained from the plant and recovered.

2.0 PRESSURE RELIEF PHILOSOPHY

Overpressure is a potential risk for the integrity of equipment and piping. The primary protection against overpressure is the detection of process parameter/s outside of operating limits and initiation of an action/s via the control or safeguarding system to prevent the design envelope being exceeded. The secondary protection is a fail-safe relief system, for example, a mechanical device such as a pressure safety valve (PSV), which operates independently of the automated control and safeguarding systems.

The primary protection is described in the P&IDs and the Cause & Effect Chart (Doc.No. 26301-000-J4-JD-00001). This document describes the fail-safe relief system.

All the causes of overpressure that constitute a potential risk for the integrity of equipment and piping shall be identified and, where not entailing excessive cost, eliminated through inherently safe design as listed in Table 1.

Table 1 : Inherently Safe Design features to eliminate or reduce relief loads

Blocked outlet	For pumped systems, the system design pressure exceeds the maximum pressure that is developed at the pump when blocked in,
External fire	Amine is flammable and can create a pool fire. Equipment not containing amine should preferably be located away from amine systems. Platforms should consist of open decking to eliminate pool fires above grade.
Power failure (partial and general)	Power failure will remove sources of mechanical overpressure e.g. pumps and compressors.

Instrument air failure (partial and general)	Control valves shall fail-safe on loss of instrument air
Gas blow-by	Pressure letdowns e.g. water from compressor suction drums shall be let down to next lowest pressure level only.
Exchanger tube rupture	For the CO2 Shell and Tube exchangers, the low pressure side is designed such that its accumulated pressure equals the pressure from the high pressure side, and relief is not required. The low pressure steam and cooling water systems my still need overpressure protection, if they cannot adequately vent the rupture flow. Elsewhere welded plate and frame heat exchangers are considered to have a lower leak rate on rupture, though vendor shall be consulted, and are preferred in high pressure services.
Abnormal heat input	The stripper design pressure results in a PSV relieving pressure of 3.8barg. As the LP steam supply to the reboiler cannot achieve the 150 deg.C required to vaporize water at this pressure, the reboiler duty will be zero during a relieving event significantly reducing the relief load.
Thermal expansion	Liquid filled equipment and pipes shall be drained when isolated to

	minimize the requirement for TERVs (Thermal Expansion Relief Valves).
Control Malfunction	Control valves should not be excessively oversized to reduce fully open case relief loads. Control valve bypasses should only be provided where the plant can feasibly be operated by manual manipulation of the bypass valve and should not be sized larger than the bypassed control valve.
Loss of cooling	The cooling water supply is taken from the site system, which has multiple duplicate components (cells and pumps) minimizing the likelihood of complete cooling loss.
Overfilling	Tanks are provided with overflow pipe to safe location. Liquid containing process equipment shall have 2 independent high level alarms, adequate surge volume to enable operator response and preferably, a SIS initiating an action which will substantially mitigate the overfilling
Reverse Flow	Consider setting the upstream design pressure above; i) the whole system settle-out pressure for gas systems

	ii) the downstream operating pressure for liquid filled systems to avoid overpressure in this scenario e.g. pump suction piping. Elsewhere installing 2 dissimilar check valves is a reliable means to mitigate the full flow relief flow.

Where the cause of overpressure cannot be eliminated, relief devices shall be sized to cater for all applicable scenarios.

Table 2 : Overpressure scenarios

Blocked outlet	For vapor systems, relief will be required and is initially estimated as the normal vapor flow e.g. compressor discharge, stripper overhead and tank vent
External fire	All equipment and tanks are provided with vapor relief from fire. In the next design stage, fire circles of minimum 2500 ft^2 will be defined and the relief associated with wetted equipment and piping area below 25 ft will be calculated for each fire circle. Equipment location, elevation and sizes need to be fixed before the fire relief loads can be finalized.
Power failure (partial and general)	No reliefs are expected for general power failure since the stripper

	relieving pressure exceeds pressure of LP steam (Note 1). Partial power failure causing stripper reflux pump to stop is same as loss of cooling.
Instrument air failure (partial and general)	N/A. Refer to Table 1.
Gas blow-by	The impact of vapor through both a fully open KO drum liquid drain control valve and its bypass should be considered as the relief flow for the downstream equipment overpressure relief.
Exchanger tube rupture	For shell-and-tube exchangers, the flow through two ends of a single completed fractured tube will need to be vented from the connecting low pressure system. For plate-and-frame exchangers rupture will result from cracks due welding defects combined with thermal stress, corrosion, or mechanical abrasion. A rupture area of 1 mm wide by 100 mm long is appropriate, unless more exchanger specific information is provided by the vendor.
Abnormal heat input	No reliefs are expected since the stripper relieving pressure exceeds pressure of LP steam (Note 1)
Thermal expansion	This case applies to the cold side of heat exchangers and liquid filled pipes

	and is expected to be less than the fire case.
Control Malfunction	Control valve malfunction closed is similar to blocked outlet. Control valve malfunction open is only likely to be a relief size determining case with gas blow-by, as covered previously
Loss of cooling	Less severe than Blocked Outlet for stripper overheads and compressor discharge.
Overfilling	N/A. Refer to Table 1.
Reverse Flow	Compressor suction drum relief should cater for reverse flow from the high pressure side, which may flow through the compressor or the fully open anti-surge control valve.

Note 1: Relief cases for packages, including reclaimer, will be developed with vendor based on final vendor design.

Refer to the table at the end this report for the PSV Summary.

3.0 DEPRESSURIZATION PHILOSOPHY

The CC Plant contains carbon dioxide at supercritical conditions. In the event of leakage or equipment failure, the released carbon dioxide will reach extremely low temperatures causing a hazard to surrounding equipment and personnel. Additionally, the concentrations of carbon dioxide may reach dangerous levels.

The bulk of the supercritical CO2 is stored in the CO2 Surge Drum and the plant is provided with a valve to depressure the CO2 Surge Drum and associated equipment. While depressuring the compressor shall be shut down and outlet ESD valve closed in order to limit the depressuring volume to the CO2 Surge Drum contents only. Separate depressuring facilities are provided on the CO2 Compressor 2nd Stage Interstage Knock-Out Drum to depressured the compressor.

During depressurization, low temperatures are envisaged and the metallurgy of the system specified to protect against low temperature embrittlement. The rate of depressurization will be designed to ensure the temperature in the CO2 Surge Drum is maintained above -50°C to avoid solid carbon dioxide ('dry ice') formation. The vessel will not be depressured below 9 barg to avoid the risk of dry ice formation at 5 barg and below.

The venting carbon dioxide is to be routed to the absorber stacks to mix with the exiting flue gases to ensure buoyancy necessary to disperse the carbon dioxide. Assuming a supercritical carbon dioxide volume of 20m3 (CO2 Surge Drum ullage between NLL and LLL) depressured over 15 minutes results in a carbon dioxide vent flow of 8 kg/ s, in the order of 1% of the flue gas flow, so the flue gas exit temperature should not be significantly reduced. CFD analysis should be conducted in the next project stage to confirm this routing is acceptable when the flue gas flow has stopped, or whether the dry gas vent should be separately vented.

4.0 PROCESS DRAINING PHILOSOPHY

Water

The process design philosophy is to maintain an overall water balance with only net input to the process. Utility streams that are not consumed in the process, such as condensed steam and cooling water, are returned to the CCPP.

MEA

MEA solvent and water containing MEA will need to be drained from the plant at shutdown or from individual equipment for maintenance activities.

In the event of planned plant shutdown, MEA circulation continues without flue gas flow to ensure the MEA solution is lean throughout all the equipment. The equipment will then be pumped out to minimum level directly, or through other vessels, to the Lean Amine Solvent Storage Tank. The remaining MEA solution will be drained by gravity through the amine sewer to the Amine Waste Sump and then pumped to the Lean Amine Solvent Storage Tank. For these purposes the Lean Amine Solvent Storage Tank has been sized to accommodate the MEA solution from all equipment and piping at the CC Plant amounting to 1265m3.

For individual equipment and in the event of a crash shutdown, the amine inventory may be partially rich. Unless it can be assured that the amine has been stripped of CO2 and is lean, the equipment will be pumped out to minimum level directly to the Rich Amine Storage Tank. The remaining MEA solution will be drained by gravity through the amine sewer to the Amine Waste Sump and then pumped to the Rich Amine Storage Tank. For these purposes the Rich Amine Storage Tank has been sized to accommodate the MEA solution from all equipment and piping at the CC Plant amounting to 1265m3. Solvent from the Rich Amine Storage Tank can be processed through the Stripper to produce specification lean amine.

The Amine Waste Sump provides an opportunity to test the drained amine and ensure it is of acceptable quality before pumping to Lean Amine Solvent Storage Tank or Rich Amine Storage Tank. For this reason, the Amine Waste Sump has been sized to accommodate the entire contents of the largest vessel (One CO2 Absorber including wash water contents) amounting to 560m3. If the drained MEA solution is not acceptable for either storage tank, it can be pumped from the Amine Waste Sump to road tankers for off-site disposal.

Other

The draining for non-process streams are described in the Discharge and Emissions Data Forms, Document 26301-000-U6D-0000-00001.

5.0 CONCLUSION

All the causes of overpressure that constitute a potential risk for the integrity of equipment and piping shall be identified and, where not entailing excessive cost, eliminated through inherently safe design. Where the cause of overpressure cannot be eliminated, relief devices shall be sized to comply with the worst scenario.

Depressuring facilities are installed after the final stage of the compressor to ensure the plant can be depressured to mitigate the impact of loss of containment. The depressuring rate, valve and piping is designed to ensure excessively low temperatures and 'dry ice' formation are avoided.

The process design ensures that process water is retained and reused within the CC plant to eliminate routine draining and minimize make-up requirements.

Facilities are provided to drain, treat and store amine from the plant during operation and shutdown. These facilities enable the CCC Plant to be completely emptied of MEA solution at a shutdown and MEA solution to be drained from individual equipment, tested and treated before pumping to the lean amine storage tank.

PSV Summary with applicable relief scenarios.

Area	PSV Number	Equipment	P&ID	Service	Set Pressure (barg)	Discharge	Blocked Outlet	Fire	Control Malfunction / Gas Blowby / Reverse Flow	Exchanger Tube / Weld Rupture	Thermal Expansion
CN	PSV-0900	ME-101	CN-00030	Wash Water	9.1	Amine Drain		Yes			
CN	PSV-0901 (multiple)	MF-102 (multiple)	CN-00040	Rich Amine	20.76	Amine Drain		Yes			
CN	PSV-0903	ME-102	CN-00080	Lean Amine	17.69	Amine Drain		Yes			
CN	PSV-904A/B/C/....	ME-108A/B/C/....	CN-00081	Lean Amine	17.69	Amine Drain		Yes			
CN	PSV-905A/B/C/....	ME-108A/B/C/....	CN-00081	Rich Amine	20.76	Amine Drain		Yes			Yes
CN	PSV-906A/B	ME-103A/B	CN-00085	Rich Amine	20.76	Amine Drain		Yes			Yes
CN	PSV-0907A/B	ME-103A/B	CN-00085	Semi-Lean Amine	10.97	Amine Drain		Yes		Yes	
CN	PSV-0908	ME-109	CN-00100	Rich Amine	20.76	Amine Drain		Yes			Yes
CN	PSV-0909	ME-107	CN-00100	Rich Amine	20.76	Amine Drain		Yes			
CN	PSV-0910	ME-107	CN-00100	Lean Amine	17.69	Amine Drain		Yes			
CN	PSV-0920	T-103	CN-00130	Water Vapor	3.45	Wet Vent Header	Yes	Yes	Yes, compressor spillback		
CN	PSV-0912	MV-202	CN-00140	CO2	3.45	Wet Vent Header	Yes	Yes	Yes, compressor spillback		
CN	PSV-0913A/B/C...	ME-110A/B/C...	CN-00150	Amine	4	Amine Drain					DURING CLEANING
CN	PSV-0914A/B	MF-105A/B	CN-00170	Lean Amine	17.69	Amine Drain		Yes			
QG	PSV-0900/0909	MV-203	QG-00010	CO2	3.45	Dry Vent Header	Yes	Yes	Yes, compressor spillback		
QG	PSV-0901/0910	MV-104	QG-00040	CO2	6.7	Dry Vent Header	Yes	Yes	Yes, compressor spillback		
QG	PSV-0902	MV-105	QG-00070	CO2	25.9	Dry Vent Header	Yes	Yes	Yes, compressor spillback		
QG	PSV-0903	MV-106	QG-00110	CO2	111.71	Dry Vent Header	Yes	Yes			
TANKAGE & UTILITY PSVs											
CY	PSV-0901	MT-102	CY-00010	N2	By Tank Vendor	Atmosphere	Yes	Separate Fire Relief	N2 Purge FO		
CY	PSV-0902	MT-101	CY-00010	N2	By Tank Vendor	Atmosphere	Yes	Separate Fire Relief	N2 Purge FO		
QG	PSV-0904	ME-112	QG-00030	Steam	10	Atmosphere	Yes				
QG	PSV-0905	ME-114	QG-00060	Steam	20	Atmosphere	Yes				
QG	PSV-0906	ME-116	QG-00100	Steam	86	Atmosphere	Yes				
QG	PSV-910	ME-109	GQ-0100	Steam	10	Atmosphere	Yes			Yes	
WL	PSV-0902	ME-111A	WL-00002	CW	5.2	Drain	Yes	Yes			Yes
WL	PSV-0904	ME-102	WL-00002	CW	5.2	Drain		Yes		Yes	Yes
WL	PSV-0905	ME-101	WL-00002	CW	5.2	Drain		Yes			Yes
WL	PSV-0906	ME-104	WL-00002	CW	5.2	Drain		Yes			Yes
WL	PSV-0907	ME-113	WL-00003	CW	5.2	Drain		Yes			Yes
WL	PSV-0908	ME-115	WL-00003	CW	20	Drain		Yes			Yes
WL	PSV-0909	ME-117	WL-00003	CW	86	Drain		Yes			Yes
WL	PSV-0910	ME-111B	WL-00002	CW	5.2	Drain		Yes			Yes
WL	PSV-0911	ME-111C	WL-00002	CW	5.2	Drain		Yes			Yes
WL	PSV-0912	ME-111D	WL-00002	CW	5.2	Drain		Yes			Yes
WL	PSV-0915	ME-118	WL-00003	CW	5.2	Drain		Yes			Yes
WL	PSV-0917	Int BD Cooler	WL-00002	CW	5.2	Drain		Yes			Yes

Appendix E: Plot Plan, GA, Piping Arrangement and Elevations

Piping Arrangement Overall Piping Plan

- 25474-000-P4-0010-00001

Piping Arrangement Plan View at Grade (EL. +7.0M)

- 25474-000-P4-0010-00002

Piping Arrangement Plan View at (EL. +16.95M)

- 25474-000-P4-0010-00003

Piping Arrangement Sections and Elevations

- 25474-000-P4-0010-00004

Piping Arrangement Sections and Elevations

- 25474-000-P4-0010-00005

Piping Arrangement Sections and Elevations

- 25474-000-P4-0010-00006

Piping Arrangement Sections and Elevations

- 25474-000-P4-0010-00007

Piping Arrangement Sections and Elevations

- 25474-000-P4-0010-00008

Acknowledgment: This material is based upon work supported by the Department of Energy Award Number DE-FE0031848

Disclaimer: This report was prepared as an account of work sponsored by an agency of the United States Government. Neither the United States Government nor any agency thereof, nor any of their employees, makes any warranty, express or implied, or assumes any legal liability or responsibility for the accuracy, completeness, or usefulness of any information, apparatus, product, or process disclosed, or represents that its use would not infringe privately owned rights. Reference herein to any specific commercial product, process, or service by trade name, trademark, manufacturer, or otherwise does not necessarily constitute or imply its endorsement, recommendation, or favoring by the United States Government or any agency thereof. The views and opinions of authors expressed herein do not necessarily state or reflect those of the United States Government or any agency thereof.

NOTES:
1. SEE DRAWING 26301-000-P1-0310-00003 FOR EQUIPMENT DESCRIPTIONS.

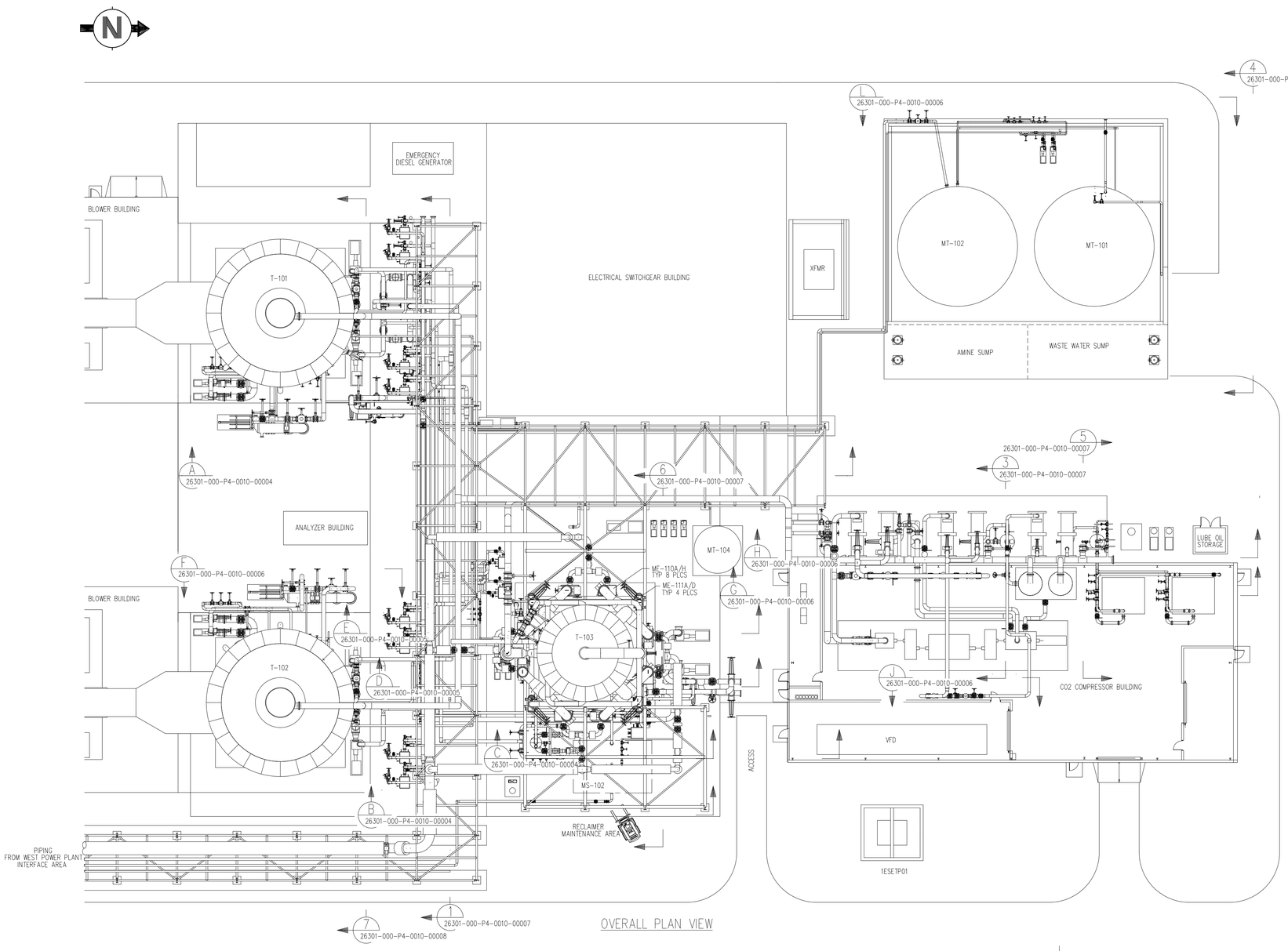

OVERALL PLAN VIEW

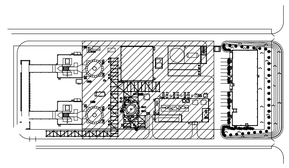

KEY PLAN

NO.	DATE	REVISIONS	BY	CHK	APPR
0	11/23/20	ISSUED FOR INFORMATION	KML	VS	VS

Owner
U. S. DEPARTMENT OF ENERGY, OFFICE OF FOSSIL ENERGY, NATIONAL ENERGY TECHNOLOGY LABORATORY

Contractor
BECHTEL NATIONAL, INC.

FEED STUDY FOR CARBON CAPTURE PLANT RETROFIT

PIPING ARRANGEMENT
OVERALL PIPING PLAN

Sheet Size 594 X 841 "A1" | Scale AS SHOWN

JOB NO.	DRAWING NO.	REV.
26301	000-P4-0010-00001	0

Acknowledgment: This material is based upon work supported by the Department of Energy Award Number DE-FE0031948
Disclaimer: This report was prepared as an account of work sponsored by an agency of the United States Government. Neither the United States Government nor any agency thereof, nor any of their employees, makes any warranty, express or implied, or assumes any legal liability or responsibility for the accuracy, completeness, or usefulness of any information, apparatus, product, or process disclosed, or represents that its use would not infringe privately owned rights. Reference herein to any specific commercial product, process, or service by trade name, trademark, manufacturer, or otherwise does not necessarily constitute or imply its endorsement, recommendation, or favoring by the United States Government or any agency thereof. The views and opinions of authors expressed herein do not necessarily state or reflect those of the United States Government or any agency thereof.

NOTES:
1. SEE DRAWING 26301-000-P1-0310-00003 FOR EQUIPMENT DESCRIPTIONS.

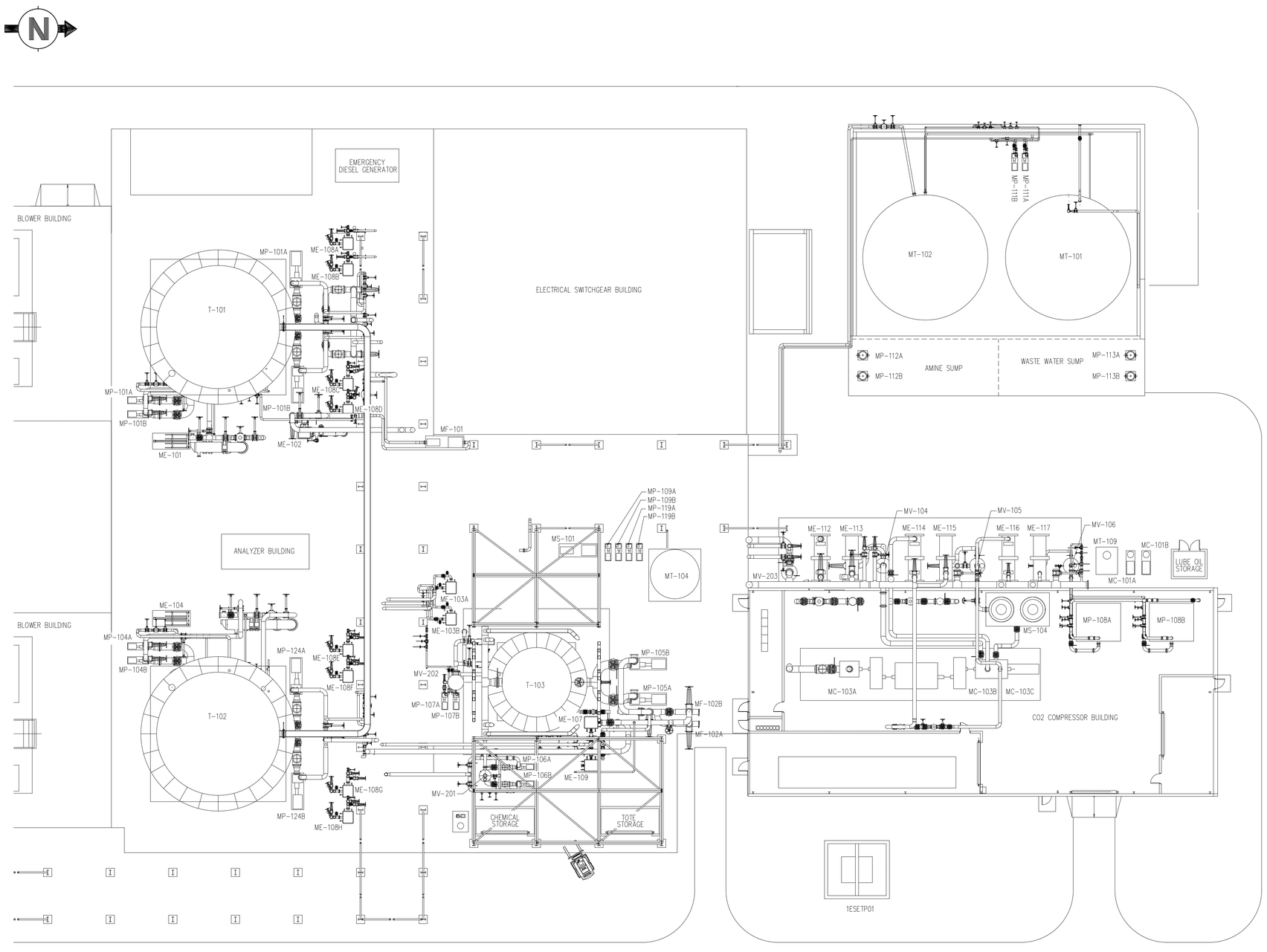

PLAN VIEW @ GRADE

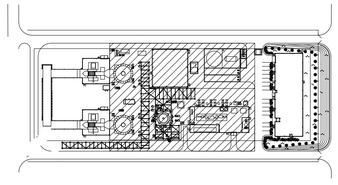

KEY PLAN

NO.	DATE	REVISIONS	BY	CHK	APPR
0	11/16/20	ISSUED FOR INFORMATION	KML	VS	VS

Owner
U. S. DEPARTMENT OF ENERGY, OFFICE OF FOSSIL ENERGY, NATIONAL ENERGY TECHNOLOGY LABORATORY

Contractor
BECHTEL NATIONAL, INC.

FEED STUDY FOR CARBON CAPTURE PLANT RETROFIT

PIPING ARRANGEMENT
PLAN VIEW AT GRADE

Sheet Size	Scale	
594 X 841 "A1"	AS SHOWN	
JOB NO.	DRAWING NO.	REV.
26301	000-P4-0010-00002	0

Acknowledgement: This material is based upon work supported by the Department of Energy Award Number DE-FE0031584.
Disclaimer: This report was prepared as an account of work sponsored by the United States Government. Neither the United States Government nor any of their employees, makes any warranty, express or implied, or assumes any legal liability or responsibility for the accuracy, completeness, or usefulness of any information, apparatus, product, or process disclosed, or represents that its use would not infringe privately owned rights. Reference herein to any specific commercial product, process, or service by trade name, trademark, manufacturer, or otherwise does not necessarily state or reflect those of the United States Government or any agency thereof. The views and opinions of authors expressed herein do not necessarily state or reflect those of the United States Government or any agency thereof.

NOTES:
1. SEE DRAWING 26301-000-P1-0310-00003 FOR EQUIPMENT DESCRIPTIONS.

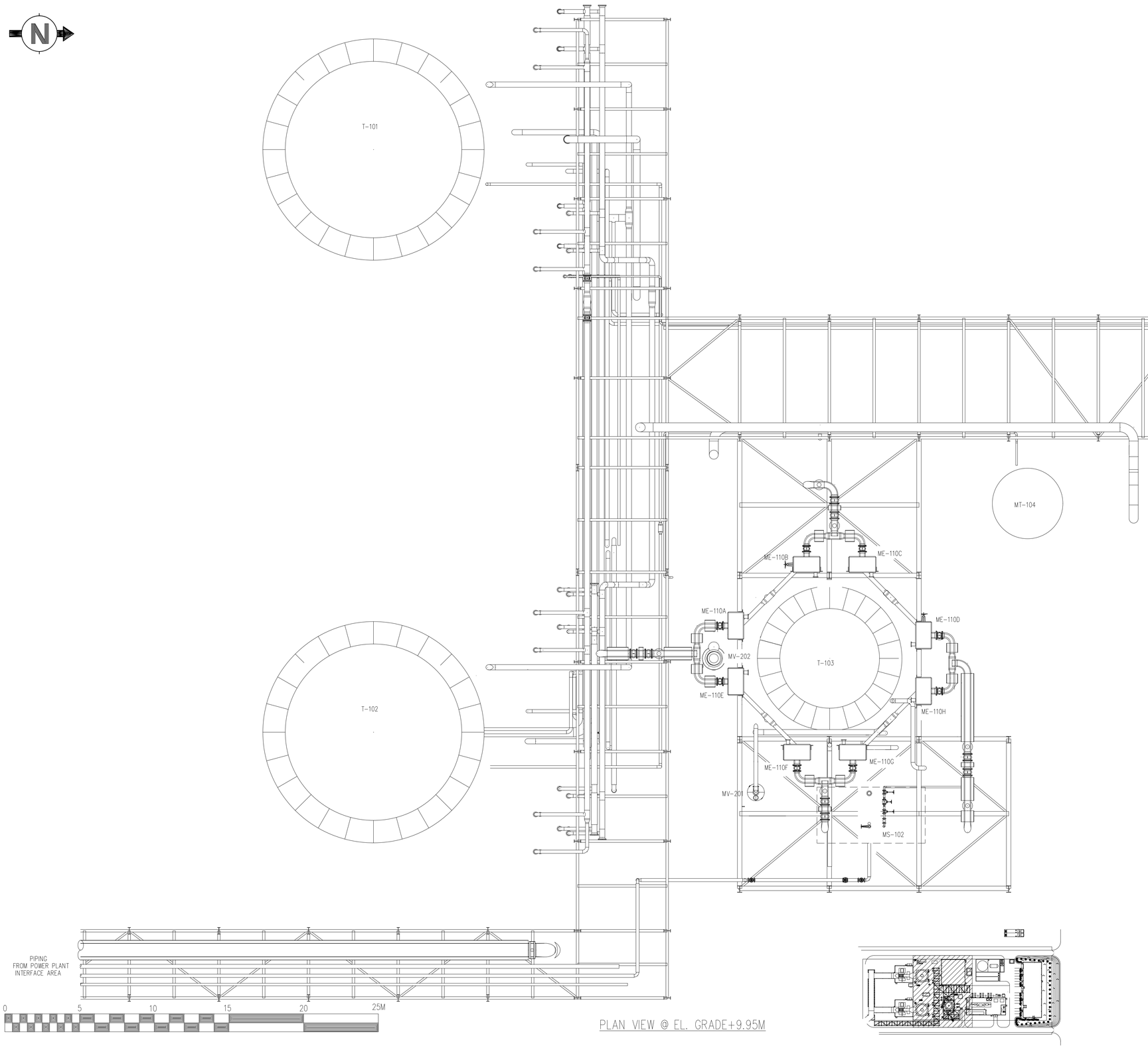

PLAN VIEW @ EL. GRADE+9.95M

KEY PLAN

NO.	DATE	REVISIONS	BY	CHK	APPR
0	11/16/20	ISSUED FOR INFORMATION	KML	VS	VS

Owner
U. S. DEPARTMENT OF ENERGY, OFFICE OF FOSSIL ENERGY, NATIONAL ENERGY TECHNOLOGY LABORATORY

Contractor
BECHTEL NATIONAL, INC.

FEED STUDY FOR CARBON CAPTURE PLANT RETROFIT

PIPING ARRANGEMENT
PLAN VIEW (EL. GRADE + 9.95 M)

Sheet Size 594 X 841 "A1" Scale AS SHOWN

JOB NO.	DRAWING NO.	REV.
26301	000-P4-0010-00003	0

Acknowledgment: This material is based upon work supported by the Department of Energy Award Number DE-FE0031948.
Disclaimer: This report was prepared as an account of work sponsored by an agency of the United States Government. Neither the United States Government nor any agency thereof, nor any of their employees, makes any warranty, express or implied, or assumes any legal liability or responsibility for the accuracy, completeness, or usefulness of any information, apparatus, product, or process disclosed, or represents that its use would not infringe privately owned rights. Reference herein to any specific commercial product, process, or service by trade name, trademark, manufacturer, or otherwise does not necessarily constitute or imply its endorsement, recommendation, or favoring by the United States Government or any agency thereof. The views and opinions of authors expressed herein do not necessarily state or reflect those of the United States Government or any agency thereof.

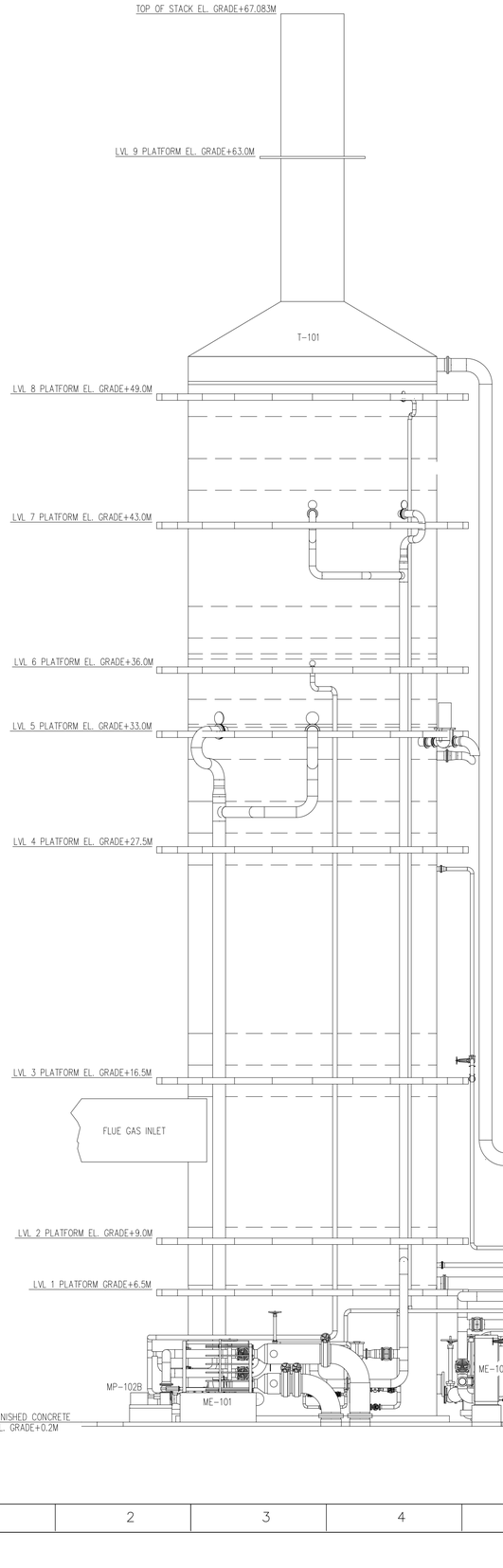

ELEVATION A
26301-000-P4-0010-00001

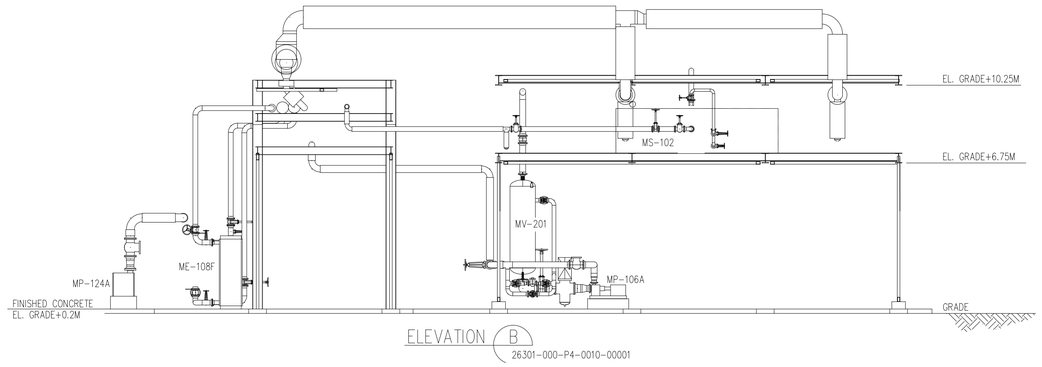

ELEVATION B
26301-000-P4-0010-00001

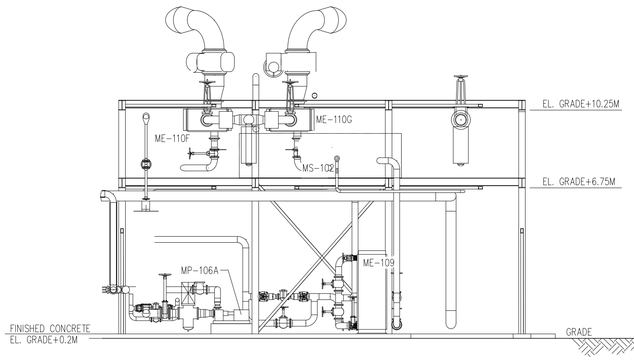

ELEVATION C
26301-000-P4-0010-00001

0M 1M 5M 10M

NOTES:
1. SEE DRAWING 26301-000-P1-0310-00003 FOR EQUIPMENT DESCRIPTIONS.

NO.	DATE	REVISIONS	BY	CHK	APPR
0	11/23/20	ISSUED FOR INFORMATION	KML	VS	VS

Owner
U. S. DEPARTMENT OF ENERGY, OFFICE OF FOSSIL ENERGY, NATIONAL ENERGY TECHNOLOGY LABORATORY

Contractor
BECHTEL NATIONAL, INC.

FEED STUDY FOR CARBON CAPTURE PLANT RETROFIT

PIPING ARRANGEMENT
SECTIONS AND ELEVATIONS

Sheet Size	Scale	
594 X 841 "A1"	AS SHOWN	
JOB NO.	DRAWING NO.	REV.
26301	000-P4-0010-00004	0

Acknowledgment: This material is based upon work supported by the Department of Energy Award Number DE-FE0031945

Disclaimer: This report was prepared as an account of work sponsored by an agency of the United States Government. Neither the United States Government nor any agency thereof, nor any of their employees, makes any warranty, express or implied, or assumes any legal liability or responsibility for the accuracy, completeness, or usefulness of any information, apparatus, product, or process disclosed, or represents that its use would not infringe privately owned rights. Reference herein to any specific commercial product, process, or service by trade name, trademark, manufacturer, or otherwise does not necessarily constitute or imply its endorsement, recommendation, or favoring by the United States Government or any agency thereof. The views and opinions of authors expressed herein do not necessarily state or reflect those of the United States Government or any agency thereof.

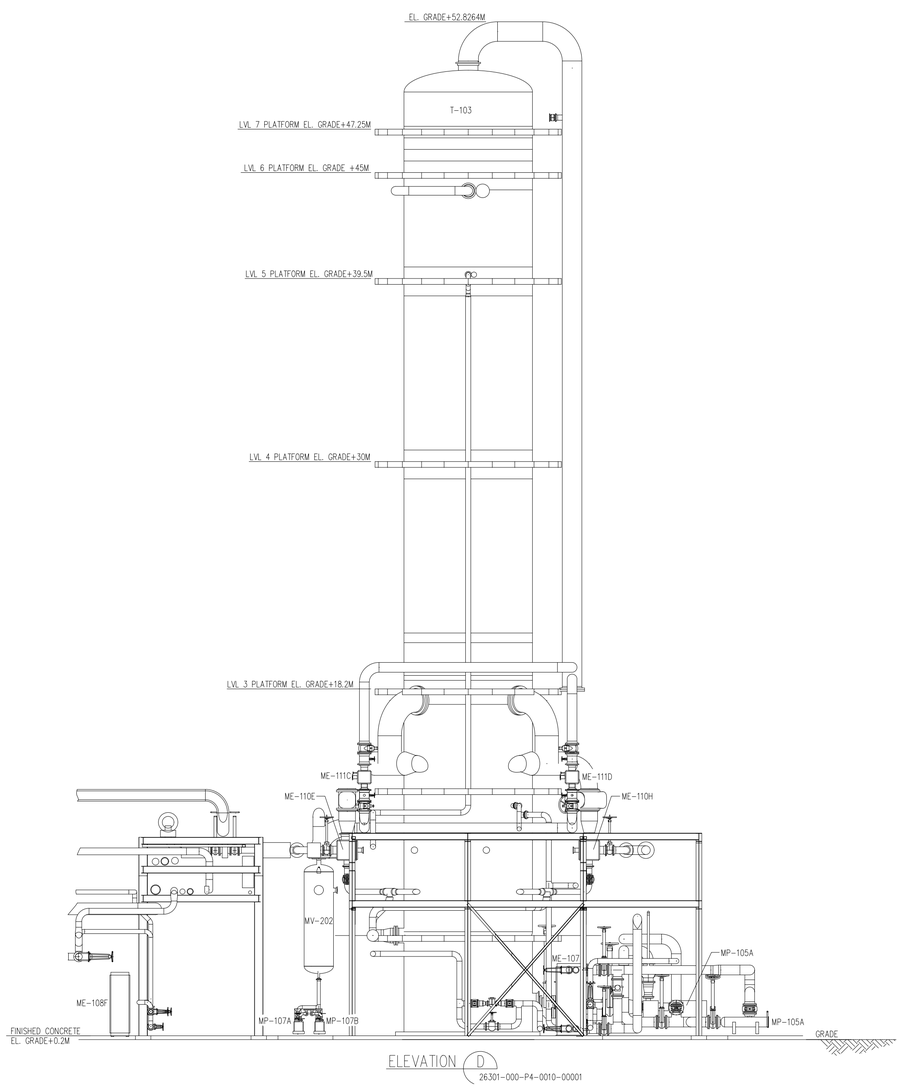

ELEVATION D
26301-000-P4-0010-00001

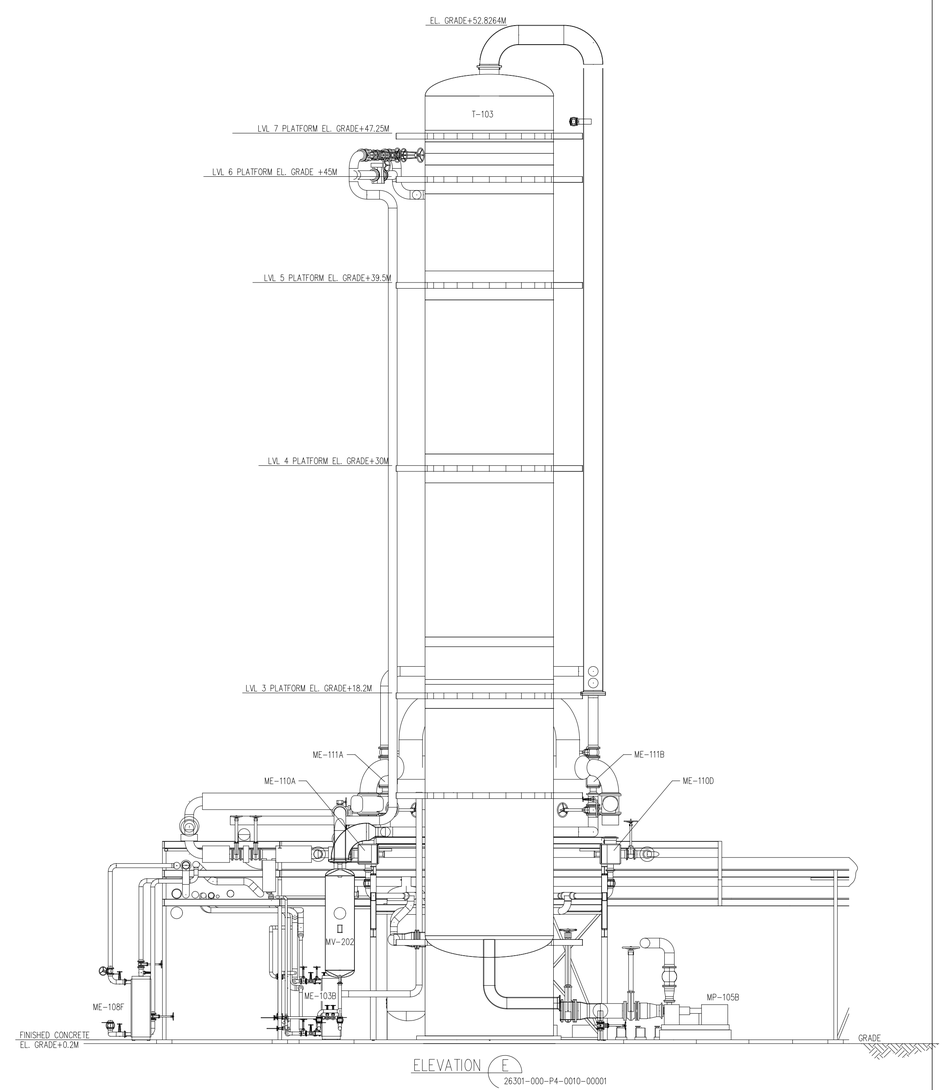

ELEVATION E
26301-000-P4-0010-00001

0M 10M 25M

NOTES:
1. SEE DRAWING 26301-000-P1-0310-00003 FOR EQUIPMENT DESCRIPTIONS.

NO.	DATE	REVISIONS	BY	CHK	APPR
0	11/20/20	ISSUED FOR INFORMATION	KML	VS	VS

Owner
U. S. DEPARTMENT OF ENERGY, OFFICE OF FOSSIL ENERGY, NATIONAL ENERGY TECHNOLOGY LABORATORY

Contractor
BECHTEL NATIONAL, INC.

FEED STUDY FOR CARBON CAPTURE PLANT RETROFIT

PIPING ARRANGEMENT
SECTIONS AND ELEVATIONS

Sheet Size 594 X 841 "A1" Scale 1:125

JOB NO.	DRAWING NO.	REV.
26301	000-P4-0010-00005	0

Acknowledgment: This material is based upon work supported by the Department of Energy Award Number DE-FE0031848

Disclaimer: This report was prepared as an account of work sponsored by an agency of the United States Government. Neither the United States Government nor any agency thereof, nor any of their employees, makes any warranty, express or implied, or assumes any legal liability or responsibility for the accuracy, completeness, or usefulness of any information, apparatus, product, or process disclosed, or represents that its use would not infringe privately owned rights. Reference herein to any specific commercial product, process, or service by trade name, trademark, manufacturer, or otherwise does not necessarily constitute or imply its endorsement, recommendation, or favoring by the United States Government or any agency thereof. The views and opinions of authors expressed herein do not necessarily state or reflect those of the United States Government or any agency thereof.

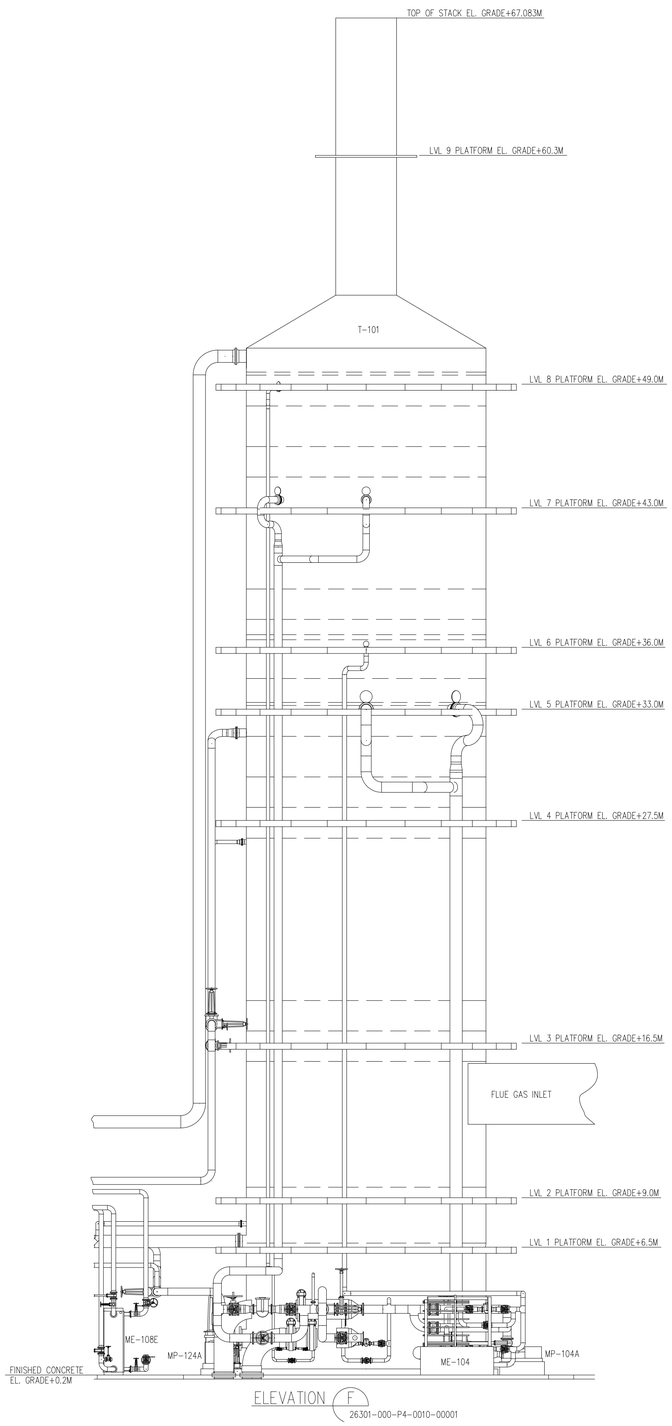

ELEVATION F
26301-000-P4-0010-00001

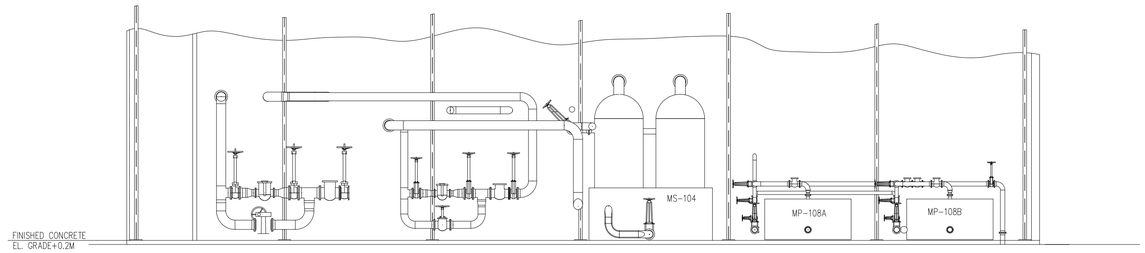

ELEVATION G
26301-000-P4-0010-00001

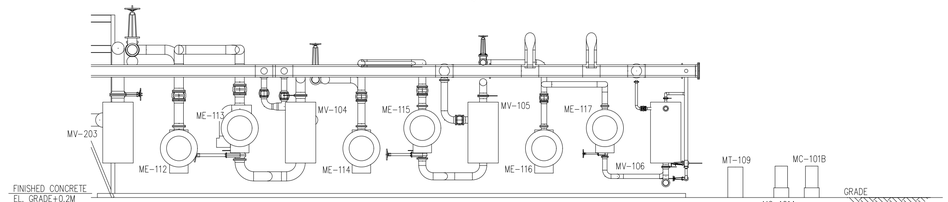

ELEVATION H
26301-000-P4-0010-00001

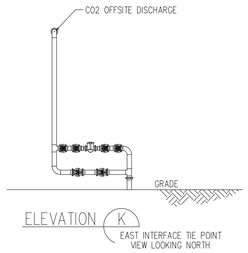

ELEVATION K
EAST INTERFACE TIE POINT
VIEW LOOKING NORTH

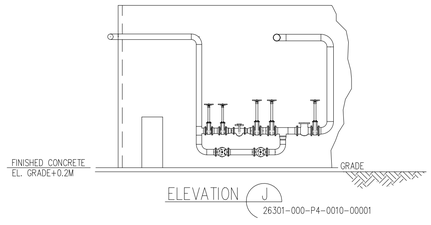

ELEVATION J
26301-000-P4-0010-00001

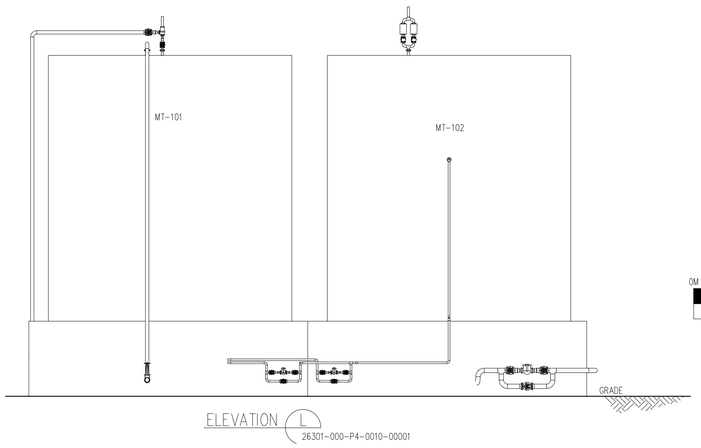

ELEVATION L
26301-000-P4-0010-00001



NOTES:
1. SEE DRAWING 26301-000-P1-0310-00003 FOR EQUIPMENT DESCRIPTIONS.

NO.	DATE	REVISIONS	BY	CHK	APPR
0	11/16/20	ISSUED FOR INFORMATION	KML	VS	VS

Owner
U.S. DEPARTMENT OF ENERGY, OFFICE OF FOSSIL ENERGY, NATIONAL ENERGY TECHNOLOGY LABORATORY

Contractor
BECHTEL NATIONAL, INC.

FEED STUDY FOR CARBON CAPTURE PLANT RETROFIT

PIPING ARRANGEMENTS
SECTIONS AND ELEVATIONS

Sheet Size 594 X 841 "A1" | Scale AS SHOWN

JOB NO.	DRAWING NO.	REV.
26301	000-P4-0010-00006	0

Acknowledgment: This material is based upon work supported by the Department of Energy Award Number DE-FE0031848

Disclaimer: This report was prepared as an account of work sponsored by an agency of the United States Government. Neither the United States Government nor any agency thereof, nor any of their employees, makes any warranty, express or implied, or assumes any legal liability or responsibility for the accuracy, completeness, or usefulness of any information, apparatus, product, or process disclosed, or represents that its use would not infringe privately owned rights. Reference herein to any specific commercial product, process, or service by trade name, trademark, manufacturer, or otherwise does not necessarily constitute or imply its endorsement, recommendation, or favoring by the United States Government or any agency thereof. The views and opinions of authors expressed herein do not necessarily state or reflect those of the United States Government or any agency thereof.

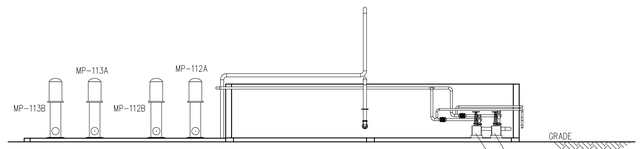

SECTION 4
26301-000-P4-0010-00001

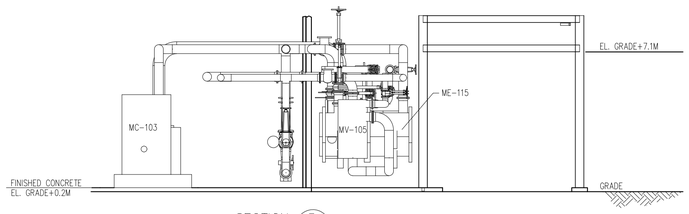

SECTION 3
26301-000-P4-0010-00001

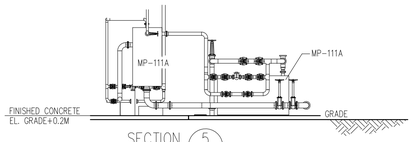

SECTION 5
26301-000-P4-0010-00001

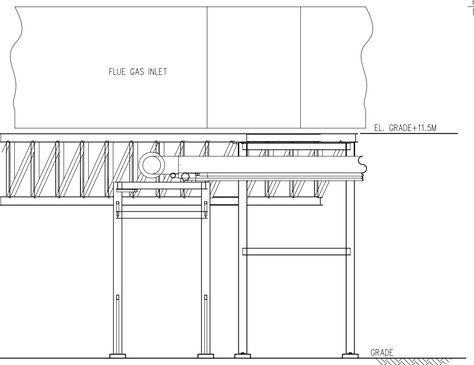

SECTION 2
SOUTH INTERFACE TIE POINT
VIEW LOOKING WEST

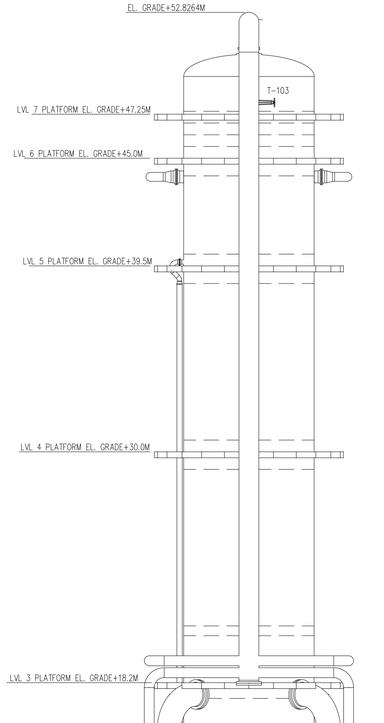

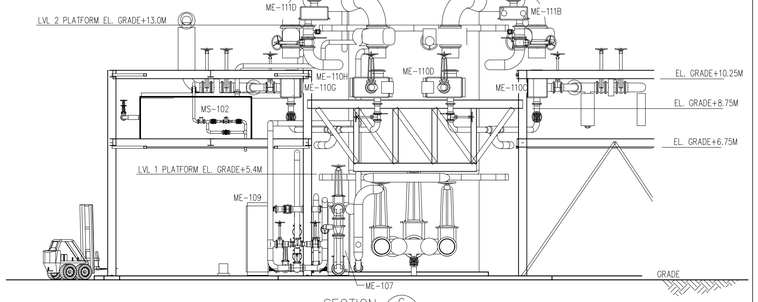

SECTION 6
26301-000-P4-0010-00001

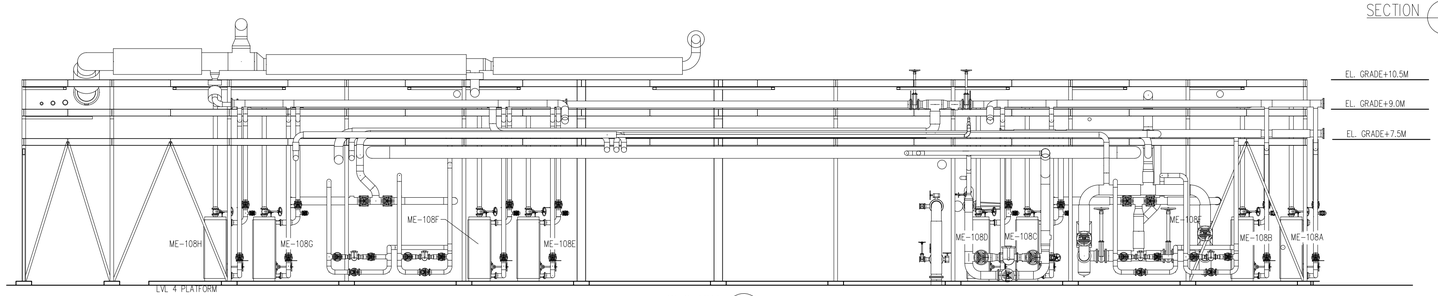

SECTION 1
26301-000-P4-0010-00001

NOTES:
1. SEE DRAWING 26301-000-P1-0310-00003 FOR EQUIPMENT DESCRIPTIONS.

NO.	DATE	REVISIONS	BY	CHK	APPR
0	11/23/20	ISSUED FOR INFORMATION	KML	VS	VS

0M 1M 5M 10M

Owner
U. S. DEPARTMENT OF ENERGY, OFFICE OF FOSSIL ENERGY, NATIONAL ENERGY TECHNOLOGY LABORATORY

Contractor
BECHTEL NATIONAL, INC.

FEED STUDY FOR CARBON CAPTURE PLANT RETROFIT

PIPING ARRANGEMENTS
SECTIONS AND ELEVATIONS

Sheet Size 594 X 841 "A1" Scale AS SHOWN

JOB NO.	DRAWING NO.	REV.
26301	000-P4-0010-00007	0

Acknowledgment: This material is based upon work supported by the Department of Energy Award Number DE-FE0031948

Disclaimer: This report was prepared as an account of work sponsored by an agency of the United States Government. Neither the United States Government nor any agency thereof, nor any of their employees, makes any warranty, express or implied, or assumes any legal liability or responsibility for the accuracy, completeness, or usefulness of any information, apparatus, product, or process disclosed, or represents that its use would not infringe privately owned rights. Reference herein to any specific commercial product, process, or service by trade name, trademark, manufacturer, or otherwise does not necessarily constitute or imply its endorsement, recommendation, or favoring by the United States Government or any agency thereof. The views and opinions of authors expressed herein do not necessarily state or reflect those of the United States Government or any agency thereof.

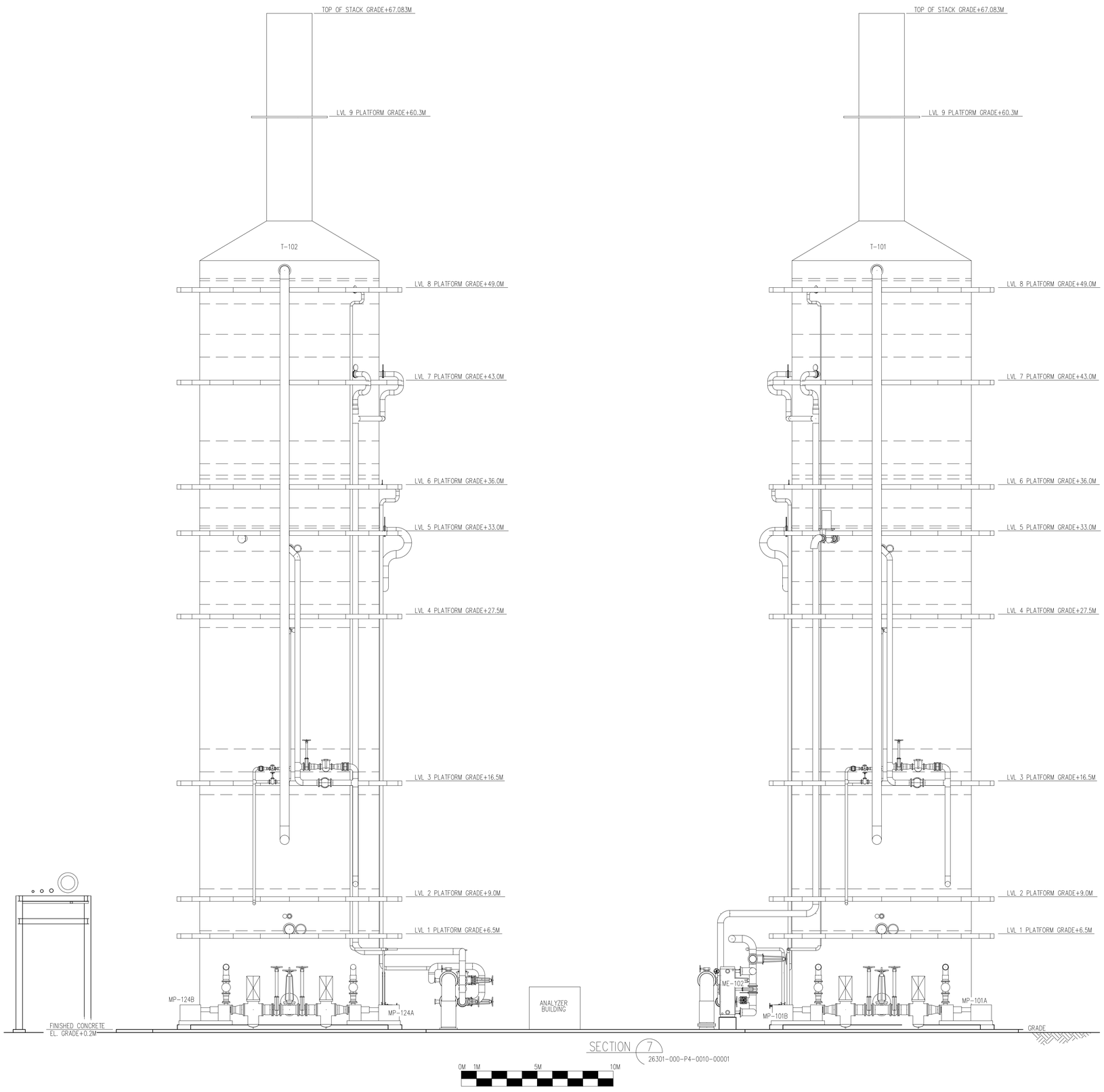

SECTION 7
26301-000-P4-0010-00001

NOTES:
1. SEE DRAWING 26301-000-P1-0310-00003 FOR EQUIPMENT DESCRIPTIONS.

NO.	DATE	REVISIONS	BY	CHK	APPR
0	11/16/20	ISSUED FOR INFORMATION	KML	VS	VS

Owner
U. S. DEPARTMENT OF ENERGY, OFFICE OF FOSSIL ENERGY, NATIONAL ENERGY TECHNOLOGY LABORATORY

Contractor
BECHTEL NATIONAL, INC.

FEED STUDY FOR CARBON CAPTURE PLANT RETROFIT

PIPING ARRANGEMENTS
SECTIONS AND ELEVATIONS

Sheet Size	Scale
594 X 841 "A1"	AS SHOWN

JOB NO.	DRAWING NO.	REV.
26301	000-P4-0010-00008	0

Appendix F: Pipe Class Selection

Pipe Class Selection

FEED STUDY FOR CARBON CAPTURE PLANT RETROFIT

Acknowledgment: This material is based upon work supported by the Department of Energy Award Number DE-FE0031848.
Disclaimer: This report was prepared as an account of work sponsored by an agency of the United States Government. Neither the United States Government nor any agency thereof, nor any of their employees, makes any warranty, express or implied, or assumes any legal liability or responsibility for the accuracy, completeness, or usefulness of any information, apparatus, product, or process disclosed, or represents that its use would not infringe privately owned rights. Reference herein to any specific commercial product, process, or service by trade name, trademark, manufacturer, or otherwise does not necessarily constitute or imply its endorsement, recommendation, or favoring by the United States Government or any agency thereof. The views and opinions of authors expressed herein do not necessarily state or reflect those of the United States Government or any agency thereof.

0	07-Aug-20	Issued for Information	MDP	MJC	MJC/ADB		
Rev.	**Date**	**Reason for Revision**	**BY**	**CHKD**	**APPD**		

Bechtel National, Inc.

Job No. 26301

Document No.	**Rev.**
26301–000–3DS-P72G-00001	0

U. S. Department of Energy, Office of Fossil Energy, National Energy Technology Laboratory

Project No. – Originator – Disc Code – Doc Type – Serial No.

NOT USED

Contents

GENERAL NOTES 3
5SJ0 6
B1E 7
BEQ 8
C1E 9
C3E 11
C9E 13
CEE 15
EGD0 17
EGF0 18
ESD0 19
ESQ 20
FSE 21
S1D 23
S1E 25
S3E 27
S6E 29
S9E 31
SJE 33
SLE 35

GENERAL NOTES

1. NUMBERING/CLASSIFICATION SYSTEM

The numbering/classification system to be used to define pipe and valve classes consists of a three/four-character code. The first character indicates the type of material; the second character, the pressure class or pressure-temperature rating; the third character, the code to which the piping is designed; and where applicable the fourth character indicates an additional characteristic.

1st Character		Material Type	
1	Cast Iron — High Silicon	I	Cast Iron
2	Carbon Steel — Cement Lined	J	Ductile Iron — Cement Lined
3	Polyvinyl Chloride (PVC)	K	Alloy Steel (2-1/4 Cr)
4	Alloy Steel (1-1/4 Cr)	L	Carbon Steel — Low Temperature
5	Prestressed Concrete Cylinder Pipe (PCCP)	M	Monel
6	Alloy Steel (5 Cr)	N	Nickel Alloy
7	Polyethylene	P	Chlorinated Polyvinyl Chloride (CPVC)
8	As Specified	Q	Concrete
9	Alloy Steel (9 Cr-1 Mo- V), P91	R	Carbon Steel — Rubber Lined
A	Aluminum	S	Stainless Steel
B	Copper/Copper Alloy	T	Titanium
C	Carbon Steel	U	Alloy 20
D	Ductile Iron	V	Vitrified Clay
E	High Density Polyethylene (HDPE)	W	Carbon Steel — Coal Tar Epoxy Lined
F	Fiberglass	X	Carbon Steel — Copper Bearing
G	Carbon Steel — Galvanized	Y	Carbon Steel — Impact Tested
H	Cast Iron — Cement Lined	Z	Carbon Steel — Plastic Lined

2nd Character		Rating	
1	Class 150	I	(not used)
2	Class 250	J	Class 1500
3	Class 300	K	2000 psi or 138 Bar
4	Class 400	L	Class 2500
5	Victaulic Rating	M	3000 psi or 207 Bar
6	Class 600	N	Class 4500
7	Pressfit Rating	P	6000 psi or 413 Bar
8	Class 800	Q	9000 psi or 620 Bar
9	Class 900	R	10000 psi or 689 Bar
A	Class 25	S	As Specified
B	Class 50	T	As Specified
C	Class 75 (Manufacturer's Rating)	U	SMACNA — As Specified
D	100 psi [7 Bar] (Manufacturer's Rating)	V	As Specified
E	Class 125	W	As Specified
F	175 psi or 12 Bar (UL Rating)	X	As Specified
G	200 psi or 14 Bar (Manufacturer's Rating)	Y	As Specified
H	1000 psi or 69 Bar	Z	Special Class 2500

3rd Character		Code	
1	ASME B31.1 (Special Material/Rating)	B	ASME Section III, Class 2
2	ASME B31.1 (Special Material/Rating)	C	ASME Section III, Class 3
3	ASME B31.1 (Special Material/Rating)	D	ASME B31.1, Power Piping Code
4	ASME B31.1 (Special Material/Rating)	E	ASME B31.3, Process Piping Code
5	ASME Section I, Power Boiler Code	F	NFPA, Fire Protection Code
6	ASME B31.1, Power Piping Code	G	ASME B31.8, Gas Trans/Dist. Code
7	ASME Section I, Power Boiler Code	H	ASME Section I, Power Boiler Code
8	ASME B31.1, Power Piping Code	J	AWWA, American Water Works Code
9	ASME Section I, Power Boiling Code	K	ASME B31.1, Power Piping Code, Seamless
A	ASME Section III, Class 1	L	ASME B31.1, ASTM A691, Gr. 91, Class 42, Welded

	3rd Character		Code
M	ASME B31.1, Power Piping Code	T	ASME B31.3
N	NFPA 54, National Fuel Gas Code	U	AASHTO
P	ASME B31.4, Liquid Hydrocarbon Code	W	ASME B31.1 Power Piping Code
Q	Applicable Plumbing Code	X	ASME B31.1, Power Piping Code
R	ASME B31.5, Refrigeration Piping Code	Y	ASME B31.1, Power Piping Code
S	ASME B31.9, Building Services Piping Code	Z	SMACNA, HVAC Ductwork Code

	4th Character (as required)		Additional Characteristics
0	No Additional Characteristics	C	Alloy Steel (9Cr) Grade P92
1	Pressure Variance per Class Sheet	E	Carbon Steel – Low Temperature
2	Pressure Variance per Class Sheet	F	Nickel – Inconel
3	Corrosion Allowance per Class Sheet	K	Seamless Pipe w/Butt Weld Ends (all Sizes)
4	Pressure Variance per Class Sheet	M	Pressure Variance per Class Sheet
5	Pressure Variance per Class Sheet	N	Pressure Variance per Class Sheet
6	Pressure Variance per Class Sheet	Q	PE100
7	Pressure Variance per Class Sheet	S	NSF 61
8	Pressure Variance per Class Sheet	W	Pressure Variance per Class Sheet
9	Pressure Variance per Class Sheet	X	Pressure Variance per Class Sheet
A	Stainless Steel Type 316/316L	Y	Pressure Variance per Class Sheet
B	Stainless Steel Type 321		

2. Flanged joints are not recommended for use in high temperature steam service.

3. Materials specified in the Piping Class Sheets shall meet the requirements of the Applicable Code and the Applicable Technical Specification.

4. Field weld joint details and weld joint transition details for any specific class of pipe shall be in accordance with the drawings specified on that Piping Class Sheet.

5. Gasket materials to be used with stainless steel flanges shall contain a maximum of 200 ppm leachable chlorides.

6. To prevent galvanic corrosion between dissimilar metals, insulating flange kits shall be provided where shown on design drawings. The insulating flange kit shall consist of one (1) Linebacker Type E or equal for flat-faced gaskets or one (1) Linebacker Type F or equal for raised face gaskets (service gaskets are not used with Linebacker gaskets), one (1) 1/8" thick steel washer for each bolt, one (1) insulating washer for each bolt, and one (1) full length insulating sleeve for each bolt. Insulating flanges shall not be buried.

7. The weight of any piping specified with a minimum wall thickness shall not vary more than 10 percent over and 5 percent under the weight of the piping at the specified nominal wall thickness.

8. Threaded joints, where specified, shall be in accordance with the applicable code and ASME B1.20.1.

9. The use of short radius elbows and returns conforming to ASME B16.28, Wrought Steel butt welding Short Radius Elbows and Returns, are neither prohibited nor recommended; however, when used, the minimum thickness in the crotch region shall be 20 percent greater than the minimum thickness required for the straight pipe.

10. NPS 2-1/2 and larger stainless steel piping to be butt welded shall be at least Schedule 10S.

11. Nonmetallic piping may be used where permitted by the construction code and within the recommendations and limitations of the pipe manufacturer.

12. The design pressure and design temperature of a piping system shall not exceed the pressure-temperature rating of the weakest element in the piping system.

13. Where steel pipe is threaded for steam service above 250 psig or 17 Bar, and water service above 100 psig or 9 Bar with water temperature above 220 °F or 104 °C, the pipe shall be seamless steel pipe having the minimum ultimate tensile strength of 48,000 psi and a weight at least equal to Schedule 80.

14. The pipe for valve bypasses shall be at least Schedule 80 and seamless.

15. For blowoff and blowdown piping classified as the Boiler External Piping (BEP) with design pressure greater than 100 psig or 9 Barg, the pipe and fittings shall be steel and, as a minimum, Schedule 80, and may be heavier to meet code requirements.

16. The selection of socket-welding fittings shall be in accordance with the following criteria:

    a. For Schedule 80 and lighter weight pipe, use Class 3000 socket-welding fittings.

    b. For Schedule 100 through Schedule 160 pipe, use Class 6000 socket-welding fittings.

    c. For XXS or XXH pipe, use Class 9000 socket-welding fittings.

    d. For pipe heavier than XXS or XXH, use socket-welding fittings having a design rating equal to or greater than the pipe design rating.

17. When steel valves are to be used for isolation during hydrostatic testing, unless consent is obtained from the manufacturer, valves shall not be subjected to a test pressure higher than 1.1 times the 100 °F rated pressure for the valve.

18. Weld NDE for pressure welds and welds to pressure retaining components shall conform to the requirements of the applicable code (i.e., ASME B31.3, NFPA, etc.).

PROJECT NAME: FEED Study for Carbon Capture Plant Retrofit
PROJECT NO: 26301

MATERIAL: PRESTRESSED CONCRETE CYLINDER PIPE **CLASS:** **5SJ0**
RATING: -
CODE: AWWA M9

ITEM		SIZE (NPS)	REMARKS
PIPE:	AWWA C301	16 – 84	PER MANUFACTURER STANDARD COMPLIANT WITH AWWA C304
FITTINGS:	AWWA C301	24 – 84	PER MANUFACTURER DIMENSIONS , SPIGOT & BELL RING, COMPLIANT WITH AWWA C304
FLANGES:	AWWA C207 CLASS D	16 – 84	150 PSIG, FF, SPIGOT & BELL ENDS, COMPLIANT WITH AWWA C304
PLATE:	N/A	-	-
BOLTING:	ASTM A193, GR. B7 (NOTE 8) ASTM A194, GR. 2H (NOTE 8)	-	STUD BOLTS, THREADED FULL LENGTH ASME B18.2.2 HEAVY HEXAGON NUTS
GASKETS:	1/8” SBR AWWA C200	ALL SIZES	-
JOINTS:	TESTABLE DOUBLE GASKET BELL & SPIGOT JOINTS FOR PCCP TO PCCP FLANGED JOINTS FOR TRANSITIONS TO OTHER METALLURGY		

BRANCH CONNECTIONS: BRANCH CONNECTION DETAILS: 3DS-P72G-00006

NOTES:

1. DESIGN CONDITIONS ARE PROJECT SPECIFIC, HOWEVER PIPE SHALL NOT BE USED FOR WATER SERVICE AT TEMPERATURES ABOVE 65 ºC.
2. PIPE CLASS SHOULD BE USED IN CONJUNCTION WITH CIVIL SPECIFICATION 3GS-CY01-00002
3. REFER TO AWWA MANUAL M9, CONCRETE PRESSURE PIPE FOR REQUIREMENTS ON HANDLING, DELIVERY, LAYING AND FIELD TESTING OF PIPE IN ACCORDANCE WITH AWWA C301.
4. BOLTING COATINGS — INSULATED PIPE — MANUFACTURER'S STANDARD FINISH; UNINSULATED PIPE — BOLTS, STUDS AND NUTS TO BE HOT DIP GALVANIZED PER ASTM A153 OR MECHANICALLY GALVANIZED PER ASTM B695

PROJECT NAME: FEED Study for Carbon Capture Plant Retrofit
PROJECT NO: 26301

MATERIAL: COPPER/COPPER ALLOY **CLASS:** **B1E**
RATING: CLASS 150
CODE: ASME B31.3, PROCESS PIPING CODE

ITEM	MATERIAL SPECIFICATION	SIZE (NPS)	REMARKS
PIPE:	ASTM B88, TEMPER H55, LIGHT DRAWN, SEAMLESS TUBE	4" & SMALLER	TYPE K
FITTINGS:	ASTM B62, UNS C83600, CAST BRONZE	4" & SMALLER	SOLDER JOINT FITTINGS PER ASME B16.18 (NOTE 1)
	ASTM 8584, UNS C84400 (NOTE 2)	4" & SMALLER	SOLDER JOINT FITTINGS PER ASME B16.18 (NOTE 1)
	ASTM B75, UNS C12200, WROUGHT COPPER	4" & SMALLER	SOLDER JOINT FITTINGS PER ASME B16.22 (NOTE 1)
FLANGES:	ASTM B61, CAST BRONZE	4" & SMALLER	CLASS 150, BRAZED JOINT, FF, F&D, (MSS SP-106) (NOTE 1)
PLATE:	N/A	-	-
BOLTING:	ASTM B98, UNS C65100, TEMPER H06 (NOTE 3)	-	ASME B18.2.1 HEAVY HEXAGON HEAD BOLTS ASME B18.2.2 HEAVY HEXAGON NUTS
GASKETS:	NEOPRENE	ALL SIZES	1/16" THICK, FULL FACED, BOLT HOLES PUNCHED
JOINTS:	BRAZED		

BRANCH CONNECTIONS: SOLDER JOINT FITTINGS (NOTE 1)

NOTES:

1. ALL THREADLESS JOINTS SHALL BE BRAZED USING A BRAZING ALLOY CONFORMING TO AWS A5.8. BCUP-5 SIL-FOS OR AIR CONSIL-15 ARE TWO TRADE NAMES BUT THERE ARE OTHERS. FLUX USED SHOULD BE THAT RECOMMENDED BY THE BRAZING ALLOY MANUFACTURER.
2. FITTINGS SHALL MEET THE CHEMICAL AND TENSILE REQUIREMENTS OF ASTM B584 AND, IN ALL OTHER RESPECTS, SHALL COMPLY WITH THE REQUIREMENTS OF ASTM B62.
3. ASTM A193 B7 STUDS AND ASTM A194 2H NUTS MAY BE SUBSTITUTED FOR THE SPECIFIED COPPER ALLOY BOLTING. USE INSULATING SLEEVES AND WASHERS IF A193 B7 AND A194 2H ARE USED AND BOLTING COATINGS — INSULATED PIPE — MANUFACTURER'S STANDARD FINISH; UNINSULATED PIPE — BOLTS, STUDS AND NUTS TO BE: HOT DIP GALVANIZED PER ASTM A153 OR MECHANICALLY GALVANIZED PER ASTM B695

MATERIAL: COPPER/COPPER ALLOY **CLASS:** **BEQ**
RATING: CLASS 125
CODE: APPLICABLE PLUMBING CODE

ITEM		SIZE (NPS)	REMARKS
PIPE:	ASTM B88, TEMPER H55, LIGHT DRAWN, SEAMLESS TUBE	4" & SMALLER	TYPE K, CERTIFICATION AND MARKING PER NSF 61 FOR POTABLE WATER
FITTINGS:	ASTM B62, UNS C83600, CAST BRONZE	4" & SMALLER	SOLDER JOINT FITTINGS PER ASME B16.18 (NOTE 1), CERTIFICATION AND MARKING PER NSF 61 FOR POTABLE WATER SERVICE
	ASTM B584, UNS C84400 (NOTE 2)	4" & SMALLER	SOLDER JOINT FITTINGS PER ASME B16.18 (NOTE 1), CERTIFICATION AND MARKING PER NSF 61 FOR POTABLE WATER SERVICE
	ASTM B75, UNS C12200, WROUGHT COPPER	4" & SMALLER	SOLDER JOINT FITTINGS PER ASME B16.22 (NOTE 1), CERTIFICATION AND MARKING PER NSF 61 FOR POTABLE WATER SERVICE
FLANGES:	ASTM B61, CAST BRONZE	4" & SMALLER	CLASS 150, BRAZED JOINT, FF, F&D, (MSS SP-106) (NOTE 1), CERTIFICATION AND MARKING PER NSF 61 FOR POTABLE WATER SERVICE
PLATE:	N/A	-	-
BOLTING:	ASTM B98, UNS C65100, TEMPER H06 (NOTE 3)	-	ASME B18.2.1 HEAVY HEXAGON HEAD BOLTS ASME B18.2.2 HEAVY HEXAGON NUTS
GASKETS:	NEOPRENE	ALL SIZES	1/16" THICK, FULL FACED, BOLT HOLES PUNCHED
JOINTS:	BRAZED		

BRANCH CONNECTIONS: SOLDER JOINT FITTINGS (NOTE 1)

NOTES:

5. ALL THREADLESS JOINTS SHALL BE SOLDERED USING A LEAD-FREE SOLDERING ALLOY. FLUX USED SHOULD **BE** THAT RECOMMENDED BY THE SOLDERING ALLOY MANUFACTURER.
6. FITTINGS SHALL MEET THE CHEMICAL AND TENSILE REQUIREMENTS OF ASTM B584 AND, IN ALL OTHER RESPECTS, SHALL COMPLY WITH THE REQUIREMENTS OF ASTM B62.
7. ASTM A193 B7 STUDS AND ASTM A194 2H NUTS MAY BE SUBSTITUTED FOR THE SPECIFIED COPPER ALLOY BOLTING. USE INSULATING SLEEVES AND WASHERS IF A193 B7 AND A194 2H ARE USED AND BOLTING COATINGS — INSULATED PIPE — MANUFACTURER'S STANDARD FINISH; UNINSULATED PIPE — BOLTS, STUDS AND NUTS TO BE: HOT DIP GALVANIZED PER ASTM A153 OR MECHANICALLY GALVANIZED PER ASTM B695

PROJECT NAME: FEED Study for Carbon Capture Plant Retrofit
PROJECT NO: 26301

MATERIAL: CARBON STEEL **CLASS:** **C1E**
RATING: CLASS 150
CODE: ASME B31.3, PROCESS PIPING CODE

ITEM	MATERIAL SPECIFICATION	SIZE (NPS)	REMARKS
PIPE:	ASTM A106, GR. B, SEAMLESS	$^1/_2$ – 2	SCH. XS (NOTE 7)
		$2^1/_2$ – 24	STD. WT.
	API 5L, GR. B	26 – 36	STD. WT.
		40 – 42	SCH. XS
FITTINGS:	ASTM A105	$^1/_2$ – 2	CLASS 3000, SOCKET WELDING (ASME B16.11)
		1 & $1^1/_4$	CLASS 3000, THREADED, HALF COUPLING (ASME B16.11) (NOTE 1)
	ASTM A234, GR. WPB, SEAMLESS	$2^1/_2$ – 24	BUTT WELDING (ASME B16.9), WALL THICKNESS TO MATCH PIPE
	ASTM A234, GR. WPBW, SEAM WELDED	26 – 42	BUTT WELDING (ASME B16.9), WALL THICKNESS TO MATCH PIPE
FLANGES:	ASTM A105	$^1/_2$ – 2	CLASS 150, SOCKET WELDING, RF, F&D (ASME B16.5)
		$2^1/_2$ – 24	CLASS 150, SLIP-ON, RF, F&D (ASME B16.5)
		$2^1/_2$ – 24	CLASS 150, SLIP-ON, FF, F&D (ASME B16.5) (NOTE 2)
		$2^1/_2$ – 24	CLASS 150, WELD NECK, RF, F&D, BORED TO MATCH PIPE (ASME B16.5) (NOTE 3)
		$2^1/_2$ – 24	CLASS 150, WELD NECK, FF, F&D, BORED TO MATCH PIPE (ASME B16.5) (NOTE 2 & 3)
		$2^1/_2$ – 24	CLASS 300, WELD NECK, RF, F&D, BORED TO MATCH PIPE (ASME B16.5) (NOTE 3 & 4)
		26 – 42	CLASS 150, WELD NECK, RF, F&D, BORED TO MATCH PIPE (ASME B16.47, SERIES A)
PLATE:	ASTM A515 GR. 70	-	-
BOLTING:	ASTM A193, GR. B7 (NOTE 8)	-	STUD BOLTS, THREADED FULL LENGTH
	ASTM A194, GR. 2H (NOTE 8)		ASME B18.2.2 HEAVY HEXAGON NUTS
GASKETS:	COMPRESSED NON-ASBESTOS WITH SBR BINDER GARLOCK BLUE-GARD STYLE 3200 OR APPROVED EQUAL	ALL SIZES	1/16" THICK, FLAT FULL-FACE, BOLT HOLES PUNCHED (NOTE 2)
	ASBESTOS-FREE, SPIRAL WOUND	ALL SIZES	(NOTE 5)

PROJECT NAME: FEED Study for Carbon Capture Plant Retrofit
PROJECT NO: 26301

MATERIAL: CARBON STEEL **CLASS:** **C1E**
RATING: CLASS 150
CODE: ASME B31.3, PROCESS PIPING CODE

ITEM	MATERIAL SPECIFICATION	SIZE (NPS)	REMARKS
JOINTS:	WELDED, EXCEPT AT FLANGED CONNECTIONS		
	FIELD WELD END PREPARATION AND TRANSITION DETAIL: 3DS-P72G-00004		

BRANCH CONNECTIONS: BRANCH CONNECTION DETAILS: 3DS-P72G-00006

NOTES:

1. USE FOR "T" THERMOWELL INSTALLATION ON NPS 4 AND LARGER PIPE WITH NOMINAL WALL THICKNESS OF $^{3}/_{4}$" OR LESS. ALSO REFER TO ENGINEERING DESIGN STANDARD 3DS-P72G-00009, "THERMOWELL INSTALLATION AND FABRICATION DETAILS".
2. FLAT FACE FLANGES AND FULL FACE GASKETS SHALL BE USED WHEN MATING TO FLAT FACE CAST IRON FLANGES AT VALVES AND/OR EQUIPMENT.
3. WELD NECK FLANGES ARE INTENDED FOR USE IMMEDIATELY NEXT TO BUTT WELDED FITTINGS AND ANYWHERE ELSE WHERE THERE IS A SPECIFIC NEED TO MEET THE LAYOUT DESIGN REQUIREMENTS.
4. CLASS 300 FLANGES SHALL BE USED ONLY WHERE ABSOLUTELY REQUIRED AND AT EQUIPMENT AND/OR OTHER INTERFACE POINTS.
5. FLEXITALLIC STYLE CG WITH FLEXICARB FILLER MATERIAL OR EQUAL WITH 1/8" THICK CARBON STEEL CENTERING RING. METAL STRIP USED SHALL BE STAINLESS STEEL TP304.
6. MINIMUM AS-FABRICATED WALL THICKNESS FOR ALL PIPE SIZES IN THIS PIPE CLASS IS 87½ % OF THE SPECIFIED NOMINAL PIPE WALL THICKNESS.
7. FIELD FABRICATED NPS 2 AND SMALLER PIPING MAY UTILIZE THREE DIAMETER (3D) OR LARGER RADIUS BENDS IN LIEU OF SOCKET WELDING FITTINGS IN ACCORDANCE WITH THE REQUIREMENTS OF ASME B31.3.
8. BOLTING COATINGS — INSULATED PIPE — MANUFACTURER'S STANDARD FINISH; UNINSULATED PIPE — BOLTS, STUDS AND NUTS TO BE HOT DIP GALVANIZED PER ASTM A153 OR MECHANICALLY GALVANIZED PER ASTM B695

MATERIAL: CARBON STEEL **CLASS:** **C3E**
RATING: CLASS 300
CODE: ASME B31.3, PROCESS PIPING CODE

ITEM	MATERIAL SPECIFICATION	SIZE (NPS)	REMARKS
PIPE:	ASTM A106, GR. B, SEAMLESS	$^1/_2$ – 2	SCH. XS (NOTE 4)
		$2^1/_2$ – 18	STD. WT.
	API 5L, GR. B, EFW	20 – 22	SCH. XS
		24	SCH. 30
		26	0.625” NOMINAL WALL THICKNESS
		28	0.688” NOMINAL WALL THICKNESS
		30 – 32	0.750” NOMINAL WALL THICKNESS
		34	0.812” NOMINAL WALL THICKNESS
		36	0.875” NOMINAL WALL THICKNESS
FITTINGS:	ASTM A105	$^1/_2$ – 2	CLASS 3000, SOCKET WELDING (ASME B16.11)
		1 & $1^1/_4$	CLASS 3000, THREADED, HALF COUPLING (ASME B16.11) (NOTE 1)
	ASTM A234, GR. WPB, SEAMLESS	$2^1/_2$ – 24	BUTT WELDING (ASME B16.9), WALL THICKNESS TO MATCH PIPE
	ASTM A234, GR. WPBW, SEAM WELDED	26 – 36	BUTT WELDING (ASME B16.9), WALL THICKNESS TO MATCH PIPE
FLANGES:	ASTM A105	$^1/_2$ – 2	CLASS 300, SOCKET WELDING, RF, F&D (ASME B16.5)
		$2^1/_2$ – 24	CLASS 300, WELD NECK, RF, F&D, BORED TO MATCH PIPE (ASME B16.5)
		26 – 36	CLASS 300, WELD NECK, RF, F&D, BORED TO MATCH PIPE (ASME B16.47, SERIES A)
PLATE:	ASTM A515 GR. 70	-	-
BOLTING:	ASTM A193, GR. B7 (NOTE 5)	-	STUD BOLTS, THREADED FULL LENGTH
	ASTM A194, GR. 2H (NOTE 5)		ASME B18.2.2 HEAVY HEXAGON NUTS
GASKETS:	ASBESTOS-FREE, SPIRAL WOUND	ALL SIZES	(NOTE 2)

PROJECT NAME: FEED Study for Carbon Capture Plant Retrofit
PROJECT NO: 26301

MATERIAL: CARBON STEEL **CLASS:** **C3E**
RATING: CLASS 300
CODE: ASME B31.3, PROCESS PIPING CODE

ITEM	MATERIAL SPECIFICATION	SIZE (NPS)	REMARKS
JOINTS:	WELDED, EXCEPT AT FLANGED CONNECTIONS FIELD WELD END PREPARATION AND TRANSITION DETAIL: 3DS-P72G-00004		

BRANCH CONNECTIONS: BRANCH CONNECTION DETAILS: 3DS-P72G-00006

NOTES:

1. USE FOR "T" THERMOWELL INSTALLATION ON NPS 4 AND LARGER PIPE WITH NOMINAL WALL THICKNESS OF $^{3}/_{4}$" OR LESS. ALSO REFER TO ENGINEERING DESIGN STANDARD 3DS-P72G-00009, "THERMOWELL INSTALLATION AND FABRICATION DETAILS".
2. FLEXITALLIC STYLE CG WITH FLEXICARB FILLER MATERIAL OR EQUAL WITH 1/8" THICK CARBON STEEL CENTERING RING. METAL STRIP USED SHALL BE STAINLESS STEEL TP304.
3. MINIMUM AS-FABRICATED WALL THICKNESS FOR ALL PIPE SIZES IN THIS PIPE CLASS IS 87½ % OF THE SPECIFIED NOMINAL PIPE WALL THICKNESS.
4. FIELD FABRICATED NPS 2 AND SMALLER PIPING MAY UTILIZE THREE DIAMETER (3D) OR LARGER RADIUS BENDS IN LIEU OF SOCKET WELDING FITTINGS IN ACCORDANCE WITH THE REQUIREMENTS OF ASME B31.3.
5. BOLTING COATINGS — INSULATED PIPE — MANUFACTURER'S STANDARD FINISH; UNINSULATED PIPE — BOLTS, STUDS AND NUTS TO BE HOT DIP GALVANIZED PER ASTM A153 OR MECHANICALLY GALVANIZED PER ASTM B695

PROJECT NAME: FEED Study for Carbon Capture Plant Retrofit
PROJECT NO: 26301

MATERIAL: CARBON STEEL **CLASS:** **C9E**
RATING: CLASS 900
CODE: ASME B31.3, PROCESS PIPING CODE

ITEM	MATERIAL SPECIFICATION	SIZE (NPS)	REMARKS
PIPE:	ASTM A106, GR. B, SEAMLESS	$^1/_2$ – 4	SCH. XS (NOTE 4)
		6 – 24	SCH. 120.
FITTINGS:	ASTM A105	$^1/_2$ – 2	CLASS 3000, SOCKET WELDING (ASME B16.11)
		1 & $1^1/_4$	CLASS 3000, THREADED, HALF COUPLING (ASME B16.11) (NOTE 1)
	ASTM A234, GR. WPB, SEAMLESS	$2^1/_2$ – 24	BUTT WELDING (ASME B16.9), WALL THICKNESS TO MATCH PIPE
FLANGES:	ASTM A105	$^1/_2$ – 2	CLASS 1500, SOCKET WELDING, RF, F&D (ASME B16.5)
		$2^1/_2$	CLASS 1500, WELD NECK, RF, F&D, BORED TO MATCH PIPE (ASME B16.5)
		3 – 24	CLASS 900, WELD NECK, RF, F&D, BORED TO MATCH PIPE (ASME B16.5)
PLATE:	ASTM A515 GR. 70	-	-
BOLTING:	ASTM A193, GR. B7 (NOTE 5)	-	STUD BOLTS, THREADED FULL LENGTH
	ASTM A194, GR. 2H (NOTE 5)		ASME B18.2.2 HEAVY HEXAGON NUTS
GASKETS:	ASBESTOS-FREE, SPIRAL WOUND	ALL SIZES	(NOTE 2)
JOINTS:	WELDED, EXCEPT AT FLANGED CONNECTIONS		
	FIELD WELD END PREPARATION AND TRANSITION DETAIL: 3DS-P72G-00004		

BRANCH CONNECTIONS: BRANCH CONNECTION DETAILS: 3DS-P72G-00006

MATERIAL: CARBON STEEL **CLASS:** **C9E**
RATING: CLASS 900
CODE: ASME B31.3, PROCESS PIPING CODE

ITEM	MATERIAL SPECIFICATION	SIZE (NPS)	REMARKS

NOTES:

1. USE FOR "T" THERMOWELL INSTALLATION ON NPS 4 AND LARGER PIPE WITH NOMINAL WALL THICKNESS OF $^{3}/_{4}$" OR LESS. ALSO REFER TO ENGINEERING DESIGN STANDARD 3DS-P72G-00009, "THERMOWELL INSTALLATION AND FABRICATION DETAILS".
2. FLEXITALLIC STYLE CG WITH FLEXICARB FILLER MATERIAL OR EQUAL WITH 1/8" THICK CARBON STEEL CENTERING RING. METAL STRIP USED SHALL BE STAINLESS STEEL TP304.
3. MINIMUM AS-FABRICATED WALL THICKNESS FOR ALL PIPE SIZES IN THIS PIPE CLASS IS 87½ % OF THE SPECIFIED NOMINAL PIPE WALL THICKNESS.
4. FIELD FABRICATED NPS 2 AND SMALLER PIPING MAY UTILIZE THREE DIAMETER (3D) OR LARGER RADIUS BENDS IN LIEU OF SOCKET WELDING FITTINGS IN ACCORDANCE WITH THE REQUIREMENTS OF ASME B31.3.
5. BOLTING COATINGS — INSULATED PIPE — MANUFACTURER'S STANDARD FINISH; UNINSULATED PIPE — BOLTS, STUDS AND NUTS TO BE HOT DIP GALVANIZED PER ASTM A153 OR MECHANICALLY GALVANIZED PER ASTM B695

PROJECT NAME: FEED Study for Carbon Capture Plant Retrofit
PROJECT NO: 26301

MATERIAL: CARBON STEEL **CLASS:** **CEE**
RATING: CLASS 125
CODE: ASME B31.3, PROCESS PIPING CODE

ITEM	MATERIAL SPECIFICATION	SIZE (NPS)	REMARKS
PIPE:	ASTM A53, GR. B	1/2 – 2	SCH. XS (NOTE 4 & 7)
		2 1/2 – 24	STD. WT. (NOTE 6)
	API 5L, GR. B	26 – 36	STD. WT.
FITTINGS:	ASTM A105	1/2 – 2	CLASS 3000, SOCKET WELDING (ASME B16.11)
		1 & 1 1/2	CLASS 3000, THREADED, HALF COUPLING (ASME B16.11) (NOTE 1)
	ASTM A234, GR. WPBW, SEAM WELDED	2 1/2 – 36	BUTT WELDING (ASME B16.9), WALL THICKNESS TO MATCH PIPE
FLANGES:	ASTM A105	1/2 – 2	CLASS 150, SOCKET WELDING, RF, F&D (ASME B16.5)
		1/2 – 2	CLASS 150, SOCKET WELDING, FF, F&D (ASME B16.5) (NOTE 2)
		2 1/2 – 24	CLASS 150, SLIP-ON, RF, F&D (ASME B16.5)
		2 1/2 – 24	CLASS 150, SLIP-ON, FF, F&D (ASME B16.5) (NOTE 2)
		2 1/2 – 24	CLASS 150, WELD NECK, RF, F&D, BORED TO MATCH PIPE (ASME B16.5) (NOTE 3)
		2 1/2 – 24	CLASS 150, WELD NECK, FF, F&D, BORED TO MATCH PIPE (ASME B16.5) (NOTE 2 & 3)
		26 – 36	CLASS 150, WELD NECK, RF, F&D, BORED TO MATCH PIPE (ASME B16.47, SERIES A)
PLATE:	ASTM A515 GR. 70	-	-
BOLTING:	ASTM A193, GR. B7 (NOTE 8)	-	STUD BOLTS, THREADED FULL LENGTH
	ASTM A194, GR. 2H (NOTE 8)		ASME B18.2.2 HEAVY HEXAGON NUTS
GASKETS:	COMPRESSED NON-ASBESTOS WITH SBR BINDER GARLOCK BLUE-GARD STYLE 3200 OR APPROVED EQUAL	ALL SIZES	1/16" THICK, FLAT, RING
	COMPRESSED NON-ASBESTOS WITH SBR BINDER GARLOCK BLUE-GARD STYLE 3200 OR EQUAL	1/2 – 24	1/16" THICK, FLAT FULL-FACE, BOLT HOLES PUNCHED (NOTE 2)
	EPDM, MANUFACTURER'S STANDARD FOR GROOVED PIPING (FOR VICTAULIC STYLE 07 COUPLING OR EQUAL COUPLING)	2 1/2 – 12	O-RING, C-SHAPED (NOTE 6)
	EPDM, MANUFACTURER'S STANDARD FOR GROOVED PIPING. (FOR VICTAULIC STYLE W07 COUPLING)	14-24	O-RING, C-SHAPED (NOTE 6)

MATERIAL: CARBON STEEL **CLASS:** **CEE**
RATING: CLASS 125
CODE: ASME B31.3, PROCESS PIPING CODE

ITEM	MATERIAL SPECIFICATION	SIZE (NPS)	REMARKS
JOINTS:	WELDED, EXCEPT AT FLANGED CONNECTIONS OR GROOVED EQUIPMENT CONNECTIONS AND FIELD JOINTS (NOTES 4 & 7). FIELD JOINTS MAY BE GROOVED AT PROJECT'S DISCRETION. GROOVED FIELD JOINTS SHALL BE USED WHERE INDICATED ON THE ISOMETRIC DESIGN DRAWINGS (NOTE 7). FIELD WELD END PREPARATION AND TRANSITION DETAIL: 3DS-P72G-00004		

BRANCH CONNECTIONS: BRANCH CONNECTION DETAILS: 3DS-P72G-00006

NOTES:

1. USE FOR "T" THERMOWELL INSTALLATION ON NPS 4 AND LARGER PIPE WITH NOMINAL WALL THICKNESS OF $^{3}/_{4}$" OR LESS. ALSO REFER TO ENGINEERING DESIGN STANDARD 3DS-P72G-00009, "THERMOWELL INSTALLATION AND FABRICATION DETAILS".
2. FLAT FACE FLANGES AND FULL FACE GASKETS SHALL BE USED WHEN MATING TO FLAT FACE CAST IRON FLANGES AT VALVES AND/OR EQUIPMENT.
3. WELD NECK FLANGES ARE INTENDED FOR USE IMMEDIATELY NEXT TO BUTT WELDED FITTINGS AND ANYWHERE ELSE WHERE THERE IS A SPECIFIC NEED TO MEET THE LAYOUT DESIGN REQUIREMENTS.
4. THREADED JOINTS ARE PERMITTED IN COMPLIANCE WITH THE RESTRICTIONS OF PARAGRAPHS 114.2.1, 122.3.6, 122.7.3 AND 122.8 OF ASME B31.1 POWER PIPING CODE.
5. MINIMUM AS-FABRICATED WALL THICKNESS FOR ALL PIPE SIZES IN THIS PIPE CLASS IS 87½ % OF THE SPECIFIED NOMINAL PIPE WALL THICKNESS.
6. AS AN ALTERNATE, WHEN AND WHERE SHOWN ON DESIGN DRAWINGS NPS $2^{1}/_{2}$" THROUGH 24" PIPE AND FITTINGS MAY BE PROVIDED WITH GROOVED ENDS, FOR USE WITH RIGID AND BOLTED STYLE COUPLINGS, MADE OF ASTM A536, GRADE 65-45-12 DUCTILE IRON AND FURNISHED COMPLETE WITH FLEXIBLE EPDM GASKETS AND BOLTS AND NUTS
   - FOR NPS $2^{1}/_{2}$" THROUGH NPS 12", GROOVE SHALL BE PER VICTAULIC STANDARD (VICTAULIC BULLETIN 25.01), AND COUPLINGS SHALL BE VICTAULIC STYLE 07, ZERO FLEX, RIGID STYLE COUPLINGS OR EQUAL. SEE JOINTS SECTION.
   - FOR NPS 14" THROUGH NPS 24", GROOVE SHALL BE PER VICTAULIC ADVANCED GROOVE SYSTEM (AGS, VICTAULIC BULLETIN 25.09), AND COUPLINGS SHALL BE VICTAULIC STYLE W07, ZERO FLEX, RIGID STYLE COUPLINGS. SEE JOINTS.
7. COLD BENDING, TO A 3D RADIUS, OF NPS 2" AND SMALLER PIPE USING A MANDREL IS ALLOWED. CHECK PIPING FOR WRINKLES AFTER BENDING, NO WRINKLES ARE ACCEPTABLE.
8. BOLTING COATINGS (INCLUDING VICTAULIC COUPLING BOLTING) — INSULATED PIPE — MANUFACTURER'S STANDARD FINISH; UNINSULATED PIPE — BOLTS, STUDS AND NUTS TO BE HOT DIP GALVANIZED PER ASTM A153 OR MECHANICALLY GALVANIZED PER ASTM B695

MATERIAL: HIGH DENSITY POLYETHYLENE **CLASS:** **EGD0**
RATING: -
CODE: ASME B31.1

ITEM		SIZE (NPS)	REMARKS
PIPE:	HDPE D3350 PE4710 SDR9	$^3/_4$ – 24	PER IPS SIZE COMPLIANT WITH D3035/F714
FITTINGS:	HDPE D3350 PE4710 SDR9	$^3/_4$ – 24	PER IPS SIZE (NOTE 2)
FLANGES:	ASTM A536	2 – 24	CLASS 150, FF, F&D
	HDPE D3350 (SDR9/SP25)	2 – 24	250 psi, FF (NOTE 4)
PLATE:	N/A	-	-
BOLTING:	ASTM A193, GR. B7 (NOTE 5) ASTM A194, GR. 2H (NOTE 5)	-	STUD BOLTS, THREADED FULL LENGTH ASME B18.2.2 HEAVY HEXAGON NUTS
GASKETS:	1/16” GYLON 3545	ALL SIZES	(NOTE 3)
JOINTS:	N/A	-	-

BRANCH CONNECTIONS:

NOTES:

1. WHERE REQUIRED HDPE PIPING SHOULD BE THRUST BLOCKED AT BRANCH CONNECTIONS, BENDS AND TEES TO PREVENT MOVEMENT AND MAINTAIN PRESSURE RATING. METHOD OF THRUST BLOCKING SHALL BE IN ACCORDANCE WITH MANUFACTURER’S INSTALLATION PROCEDURE.
2. FABRICATED FITTINGS MAY BE USED PROVIDED THAT PRESSURE RATING IS FULLY RATED TO THE SPECIFICATION. MOLDED FITTINGS MATCHING THE PIPE WALL THICKNESS ARE PREFERRED. TAPER BOING OF A THICKER WALL FABRICATED FITTING TO MATCH THE ADJACENT THINNER WALL PIPE MUST BE PERFORMED BY A HDPE MANUFACTURER OR AUTHORIZED REPRESENTATIVE.
3. GASKETS SHOULD NOT BE USED AT HDPE-TO-HDPE FLANGED CONNECTIONS.
4. FOR ASSEMBLING NON-METALLIC FLANGES, FLAT WASHERS SHALL BE USED UNDER ALL BOLT HEADS AND NUTS. BOLT TORQUE SHALL BE IN STRICT ACCORDANCE WITH MANUFACTURER’S RECOMMENDATIONS.

PROJECT NAME: FEED Study for Carbon Capture Plant Retrofit
PROJECT NO: 26301

MATERIAL: HIGH DENSITY POLYETHYLENE **CLASS:** **EGF0**
RATING: -
CODE: NFPA

ITEM		SIZE (NPS)	REMARKS
PIPE:	HDPE FM200 (NOTE 5, 6)	3/4 – 24	COMPLIANT WITH FM200 (NFPA) – RATED FOR 13.7 BARG AT 23 ºC
FITTINGS:	HDPE FM200 (NOTE 6)	3/4 – 24	COMPLIANT WITH FM200 (NFPA) – RATED FOR 13.7 BARG AT 23 ºC (NOTE 2)
FLANGES:	ASTM A536	2 – 24	CLASS 150, FF, F&D
	HDPE D3350	2 – 24	200 PSIG, FF (NOTE 4)
PLATE:	N/A	-	-
BOLTING:	ASTM A193, GR. B7 (NOTE 5) ASTM A194, GR. 2H (NOTE 5)	-	STUD BOLTS, THREADED FULL LENGTH ASME B18.2.2 HEAVY HEXAGON NUTS
GASKETS:	1/16” GYLON 3545	ALL SIZES	(NOTE 3)
JOINTS:	N/A	-	-

BRANCH CONNECTIONS:

NOTES:

1. WHERE REQUIRED HDPE PIPING SHOULD BE THRUST BLOCKED AT BRANCH CONNECTIONS, BENDS AND TEES TO PREVENT MOVEMENT AND MAINTAIN PRESSURE RATING. METHOD OF THRUST BLOCKING SHALL BE IN ACCORDANCE WITH MANUFACTURER’S INSTALLATION PROCEDURE.
2. FABRICATED FITTINGS MAY BE USED PROVIDED THAT PRESSURE RATING IS FULLY RATED TO THE SPECIFICATION. MOLDED FITTINGS MATCHING THE PIPE WALL THICKNESS ARE PREFERRED. TAPER BOING OF A THICKER WALL FABRICATED FITTING TO MATCH THE ADJACENT THINNER WALL PIPE MUST BE PERFORMED BY A HDPE MANUFACTURER OR AUTHORIZED REPRESENTATIVE.
3. GASKETS SHOULD NOT BE USED AT HDPE-TO-HDPE FLANGED CONNECTIONS.
4. FOR ASSEMBLING NON-METALLIC FLANGES, FLAT WASHERS SHALL BE USED UNDER ALL BOLT HEADS AND NUTS. BOLT TORQUE SHALL BE IN STRICT ACCORDANCE WITH MANUFACTURER’S RECOMMENDATIONS.
5. HDPE PIPING SHALL BE INSTALLED IN ACCORDANCE WITH NFPA 24 AND IN THE CONFIGURATION AS IT WAS LISTED AND APPROVED.
6. FM APPROVED EXTRA HIGH MOLECULAR WEIGHT HDPE PIPING SYSTEM FOR UG FIRE MAIN SERVICE CERTIFIED TO NFPA REQUIREMENTS.

PROJECT NAME: FEED Study for Carbon Capture Plant Retrofit
PROJECT NO: 26301

MATERIAL: HIGH DENSITY POLYETHYLENE **CLASS:** **ESD0**
RATING: CLASS 150
CODE: ASME B31.1

ITEM		SIZE (NPS)	REMARKS
PIPE:	HDPE D3350 PE4710 SDR11	$^3/_4$ – 24	PER IPS SIZE COMPLIANT WITH D3035/F714
FITTINGS:	HDPE D3350 PE4710 SDR11	$^3/_4$ – 24	PER IPS SIZE (NOTE 2)
FLANGES:	ASTM A536	$^3/_4$ – 24	CLASS 150, FF, F&D
	HDPE D3350 (SDR11)	$^3/_4$ – 24	200 psi, FF (NOTE 4)
PLATE:	N/A	-	-
BOLTING:	ASTM A193, GR. B7 (NOTE 5) ASTM A194, GR. 2H (NOTE 5)	-	STUD BOLTS, THREADED FULL LENGTH ASME B18.2.2 HEAVY HEXAGON NUTS
GASKETS:	1/16” GYLON 3545	ALL SIZES	(NOTE 3)
JOINTS:	N/A	-	-

BRANCH CONNECTIONS:

NOTES:

1. WHERE REQUIRED HDPE PIPING SHOULD BE THRUST BLOCKED AT BRANCH CONNECTIONS, BENDS AND TEES TO PREVENT MOVEMENT AND MAINTAIN PRESSURE RATING. METHOD OF THRUST BLOCKING SHALL BE IN ACCORDANCE WITH MANUFACTURER’S INSTALLATION PROCEDURE.
2. FABRICATED FITTINGS MAY BE USED PROVIDED THAT PRESSURE RATING IS FULLY RATED TO THE SPECIFICATION. MOLDED FITTINGS MATCHING THE PIPE WALL THICKNESS ARE PREFERRED. TAPER BOING OF A THICKER WALL FABRICATED FITTING TO MATCH THE ADJACENT THINNER WALL PIPE MUST BE PERFORMED BY A HDPE MANUFACTURER OR AUTHORIZED REPRESENTATIVE.
3. GASKETS SHOULD NOT BE USED AT HDPE-TO-HDPE FLANGED CONNECTIONS.
4. FOR ASSEMBLING NON-METALLIC FLANGES, FLAT WASHERS SHALL BE USED UNDER ALL BOLT HEADS AND NUTS. BOLT TORQUE SHALL BE IN STRICT ACCORDANCE WITH MANUFACTURER’S RECOMMENDATIONS.

PROJECT NAME: FEED Study for Carbon Capture Plant Retrofit
PROJECT NO: 26301

MATERIAL: HIGH DENSITY POLYETHYLENE **CLASS:** **ESQ**
RATING: -
CODE: PLUMBING CODE

ITEM		SIZE (NPS)	REMARKS
PIPE:	HDPE D3350 PE4710 SDR11	$^3/_4$ – 24	PER IPS SIZE COMPLIANT WITH D3035/F714 SDR (NOTE 5)
FITTINGS:	HDPE D3350 PE4710 SDR11	$^3/_4$ – 24	PER IPS SIZE COMPLIANT WITH NSF 61 (NOTE 2, 5)
FLANGES:	ASTM A536	$^3/_4$ – 24	CLASS 150, FF, F&D
	HDPE D3350	$^3/_4$ – 24	200 psig, FF (NOTE 4, 5)
PLATE:	N/A	-	-
BOLTING:	ASTM A193, GR. B7 (NOTE 5) ASTM A194, GR. 2H (NOTE 5)	-	STUD BOLTS, THREADED FULL LENGTH ASME B18.2.2 HEAVY HEXAGON NUTS
GASKETS:	1/16” GYLON 3545	ALL SIZES	(NOTE 3, 5)
JOINTS:	N/A	-	-

BRANCH CONNECTIONS:

NOTES:

1. WHERE REQUIRED HDPE PIPING SHOULD BE THRUST BLOCKED AT BRANCH CONNECTIONS, BENDS AND TEES TO PREVENT MOVEMENT AND MAINTAIN PRESSURE RATING. METHOD OF THRUST BLOCKING SHALL BE IN ACCORDANCE WITH MANUFACTURER’S INSTALLATION PROCEDURE.
2. FABRICATED FITTINGS MAY BE USED PROVIDED THAT PRESSURE RATING IS FULLY RATED TO THE SPECIFICATION. MOLDED FITTINGS MATCHING THE PIPE WALL THICKNESS ARE PREFERRED. TAPER BOING OF A THICKER WALL FABRICATED FITTING TO MATCH THE ADJACENT THINNER WALL PIPE MUST BE PERFORMED BY A HDPE MANUFACTURER OR AUTHORIZED REPRESENTATIVE.
3. GASKETS SHOULD NOT BE USED AT HDPE-TO-HDPE FLANGED CONNECTIONS.
4. FOR ASSEMBLING NON-METALLIC FLANGES, FLAT WASHERS SHALL BE USED UNDER ALL BOLT HEADS AND NUTS. BOLT TORQUE SHALL BE IN STRICT ACCORDANCE WITH MANUFACTURER’S RECOMMENDATIONS.
5. HDPE PIPE, FITTINGS AND GASKETS USED IN POTABLE WATER SERVICE MIST BE CERTIFIED AND MARKED IN COMPLIANCE WITH NSF 61.
6. FOR APPLICATIONS WITH TEMPERATURES ABOVE 73 ºF CONSULT MANUFACTURER FOR APPLICABLE DERATE FACTORS AND P-T CURVES.

MATERIAL: FIBERGLASS-REINFORCED THERMOSETTING RESIN (FRTR) **CLASS:** **FSE** (NOTE 3, 6 & 7)
RATING: 174 PSIG or 12 BARG @ 54 ºC (NOTE 2)
CODE: ASME B31.3, PROCESS PIPING CODE

ITEM	MATERIAL SPECIFICATION	SIZE (NPS)	
PIPE:	ASTM D2996, GR. RTRP-11FE GLASS FIBER REINFORCED EPOXY RESIN PIPE WITH RESIN RICH LINER	1 – 16	BONDSTRAND SERIES 2000 OR EQUAL, WALL THICKNESS AS REQUIRED TO MEET THE DESIGN PRESSURE RATING, PLAIN END X PLAIN END (NOTE 1)
		18 – 60	CLASS 100, WITH PLAIN ENDS FOR BUTT AND WRAP JOINTS
FITTINGS:	ASTM D5685, GR. RTRP-11FE GLASS FIBER REINFORCED EPOXY RESIN FITTINGS WITH RESIN RICH LINER; GLASS, RESIN TYPE, THERMAL PROPERTIES AND CHEMICAL PROPERTIES SAME AS PIPE	1 – 16	FILAMENT WOUND, SOCKET TYPE ENDS. MITERED ELBOWS ARE NOT ACCEPTABLE (NOTE 4)
		1 – 8	MOLDED; SOCKET TYPE ENDS (NOTE 1, 4)
	GLASS FIBER REINFORCED THERMOSETTING POLYESTER RESIN SAME AS PIPE	18 – 60	FILAMENT WOUND, WITH PLAIN ENDS FOR BUTT AND WRAP JOINTS, FABRICATED OR MITERED, WITH INSIDE DIAMETER AND PRESSURE RATING SAME AS PIPE.
FLANGES:	ASTM D4024, GR. RTRP-11FE GLASS FIBER REINFORCED EPOXY RESIN FITTINGS WITH RESIN RICH LINER; GLASS, RESIN TYPE, THERMAL PROPERTIES AND CHEMICAL PROPERTIES SAME AS PIPE.	1 – 16	FLAT FACE, DIMENSIONS TO MATCH ASME B16.5, CLASS 150 FLANGES. FILAMENT WOUND, PRESSURE RATING TO MATCH PIPE RATING, SOCKET TYPE ENDS (NOTE 1, 4)
PLATE:	N/A	-	-
BOLTING:	ASTM A193, GR. B7 (NOTE 5) ASTM A194, GR. 2H (NOTE 5)	-	STUD BOLTS, THREADED FULL LENGTH ASME B18.2.2 HEAVY HEXAGON NUTS
GASKETS:	MICROCELLULAR PTFE	1 – 16	1/16" THICK, FULL FACE, BOLT HOLES PUNCHED, GARLOCK GYLON STYLE 3545 OR EQUIVALENT
JOINTS:	FOR NPS 16 AND SMALLER USE TAPERED SOCKET TYPE JOINTS, UTILIZING ADHESIVE CEMENT FOR JOINING AND BONDING. FOR NPS 18 AND LARGER USE BUTT AND WRAPPED JOINTS, WITH MINIMUM STRENGTH OF COMPLETED JOINT EQUAL TO THE MINIMUM PIPE WALL STRENGTH. FLANGED CONNECTIONS SHALL BE USED AT FLANGED EQUIPMENT AND ONLY WHERE ABSOLUTELY NECESSARY, FLANGED JOINTS SHALL BE MINIMIZED. ALL INTERFACE/TIE-IN POINT CONNECTIONS BETWEEN FRTR PIPING AND METALLIC PIPING SHALL BE FLANGED.		

BRANCH CONNECTIONS: USE MANUFACTURER'S STANDARD FITTINGS HAVING THE SAME OR HIGHER RATING AS PIPE.

PROJECT NAME: FEED Study for Carbon Capture Plant Retrofit
PROJECT NO: 26301

MATERIAL: FIBERGLASS-REINFORCED THERMOSETTING RESIN (FRTR) **CLASS:** **FSE** (NOTE 3, 6 & 7)
RATING: 174 PSIG or 12 BARG @ 54 ºC (NOTE 2)
CODE: ASME B31.3, PROCESS PIPING CODE

ITEM	MATERIAL SPECIFICATION	SIZE (NPS)	REMARKS

NOTES:

1. BONDSTRAND 2000 OR EQUAL PIPE AND FITTINGS, NPS 1 THROUGH 16, ARE SPECIFIED FOR USE. AS AN ALTERNATE, BONDSTRAND 4000 OR EQUAL PIPE AND FITTINGS, NPS 2 THROUGH 16, MAY BE USED.
2. PIPE NPS 16 AND SMALLER SHALL BE LIMITED FOR APPLICATIONS WITH A DESIGN TEMPERATURE NOT EXCEEDING 129 °F or 54° C AND/OR A DESIGN PRESSURE NOT EXCEEDING 174 PSIG or 12 BARG. PIPE NPS 18 AND LARGER SHALL BE LIMITED FOR APPLICATIONS WITH A DESIGN TEMPERATURE NOT EXCEEDING 30 ºC AND A DESIGN PRESSURE NOT EXCEEDING 5 BARG
3. TRENCHING, BEDDING, AND BACKFILLING SHALL BE STRICTLY IN ACCORDANCE WITH MANUFACTURER'S RECOMMENDATIONS AND THE REQUIREMENTS OF AWWA C950 AND AWWA M45.
4. THE FITTINGS AND FLANGES SHALL BE FULL-PRESSURE RATED TO MATCH THE PIPE PRESSURE RATING.
5. ONE TYPE A, SIZE N, STEEL PLAIN WASHER IN ACCORDANCE WITH ASME B18.22.3, TYPE 1A SHALL BE USED UNDER EACH NUT.
6. THE SUPPLIER SHALL SUBMIT THE PIPING MINIMUM WALL THICKNESS CALCULATIONS FOR ENGINEERING'S REVIEW AND PERMISSION TO PROCEED PRIOR TO PIPING MANUFACTURE. PIPING SHALL BE DESIGNED FOR FULL VACUUM AS WELL AS THE SPECIFIED PRESSURE.
7. BOLTING COATINGS — BOLTS, STUDS, WASHERS AND NUTS TO BE HOT DIP GALVANIZED PER ASTM A153 OR MECHANICALLY GALVANIZED PER ASTM B695.

MATERIAL: STAINLESS STEEL **CLASS:** **S1D**
RATING: CLASS 150 (NOTE 1)
CODE: ASME B31.1, POWER PIPING CODE

ITEM	MATERIAL SPECIFICATION	SIZE (NPS)	REMARKS
PIPE:	ASTM A312 GR. TP 304/TP304L W (NOTE 7)	$^1/_2$ – 2	SCH. 40S
		$2^1/_2$ – 24	SCH. 10S
FITTINGS:	ASTM A182 GR. F304/304L (NOTE 7)	$^1/_2$ – 2	CLASS 3000, SOCKET WELDING (ASME B16.11)
		1 & $1^1/_4$	CLASS 3000, THREADED, HALF COUPLING (ASME B16.11) (NOTE 2)
	ASTM A403 GR. WP304/WP304L, WELDED (NOTE 7)	$2^1/_2$ – 24	BUTT WELDING (ASME B16.9), WALL THICKNESS TO MATCH PIPE
FLANGES:	ASTM A182 GR. F304/304L (NOTE 7)	$^1/_2$ – 2	CLASS 150, SOCKET WELDING, RF, F&D (ASME B16.5)
		$2^1/_2$ – 24	CLASS 150, SLIP-ON, RF, F&D (ASME B16.5)
		$2^1/_2$ – 24	CLASS 150, SLIP-ON, FF, F&D (ASME B16.5)
		$2^1/_2$ – 24	CLASS 150, WELD NECK, RF, F&D, BORED TO MATCH PIPE (ASME B16.5) (NOTE 3)
		$2^1/_2$ – 24	CLASS 150, WELD NECK, FF, F&D, BORED TO MATCH PIPE (ASME B16.5) (NOTE 3)
		$2^1/_2$ – 24	CLASS 300, WELD NECK, RF, F&D, BORED TO MATCH PIPE (ASME B16.5) (NOTE 4)
PLATE:	ASTM A240 GR. 304L	-	-
BOLTING:	ASTM A193, GR. B8M CLASS 2	-	STUD BOLTS, THREADED FULL LENGTH
	ASTM A194, GR. 8M		ASME B18.2.2 HEAVY HEXAGON NUTS
GASKETS:	ASBESTOS-FREE, SPIRAL WOUND	ALL SIZES	(NOTE 5)

MATERIAL: STAINLESS STEEL **CLASS:** **S1D**
RATING: CLASS 150 (NOTE 1)
CODE: ASME B31.1, POWER PIPING CODE

ITEM	MATERIAL SPECIFICATION	SIZE (NPS)	REMARKS
JOINTS:	WELDED, EXCEPT AT FLANGED CONNECTIONS		
	FIELD WELD END PREPARATION AND TRANSITION DETAIL: 3DS-P72G-00004		

BRANCH CONNECTIONS: BRANCH CONNECTION DETAILS: 3DS-P72G-00006

NOTES:

1. THIS PIPING SHALL NOT BE USED WHERE THE DESIGN TEMPERATURE EXCEEDS 427 ºC
2. USE FOR "T" THERMOWELL INSTALLATION ON NPS 4 AND LARGER PIPE WITH NOMINAL WALL THICKNESS OF $^{3}/_{4}$" OR LESS. ALSO REFER TO ENGINEERING DESIGN STANDARD 3DS-P72G-00009, "THERMOWELL INSTALLATION AND FABRICATION DETAILS".
3. WELD NECK FLANGES ARE INTENDED FOR USE IMMEDIATELY NEXT TO BUTT WELDED FITTINGS AND ANYWHERE ELSE WHERE THERE IS A SPECIFIC NEED TO MEET THE LAYOUT DESIGN REQUIREMENTS.
4. CLASS 300 FLANGES SHALL BE USED ONLY WHERE ABSOLUTELY REQUIRED AND AT EQUIPMENT AND/OR OTHER INTERFACE POINTS.
5. FLEXITALLIC STYLE CGI WITH FLEXICARB FILLER MATERIAL OR EQUAL WITH 1/8" THICK STAINLESS STEEL CENTERING RING. METAL STRIP USED SHALL BE STAINLESS STEEL TP304.
6. MINIMUM AS-FABRICATED WALL THICKNESS FOR ALL PIPE SIZES IN THIS PIPE CLASS IS 87½ % OF THE SPECIFIED NOMINAL PIPE WALL THICKNESS.
7. PIPE DESIGN IS BASED ON TP 304 MATERIAL. USE DUAL GRADE TP 304/304L STAMPED OR TP304 MATERIAL. DO NOT SUBSTITUTE TP 304L IN LIEU OF DUAL GRADE TP 304/304L MATERIAL.

PROJECT NAME: FEED Study for Carbon Capture Plant Retrofit
PROJECT NO: 26301

MATERIAL: STAINLESS STEEL **CLASS:** **S1E**
RATING: CLASS 150 (NOTE 1)
CODE: ASME B31.3, PROCESS PIPING CODE

ITEM	MATERIAL SPECIFICATION	SIZE (NPS)	REMARKS
PIPE:	ASTM A312 GR. TP 304/TP304L EFW (NOTE 7)	$^1/_2$ – 2	SCH. 40S
		$2^1/_2$ – 24	SCH. 10
		26 – 30	SCH. 10
		32 – 36	STD. WT.
		40 – 48	SCH. XS
FITTINGS:	ASTM A182 GR. F304/304L (NOTE 7)	$^1/_2$ – 2	CLASS 3000, SOCKET WELDING (ASME B16.11)
		1 & $1^1/_4$	CLASS 3000, THREADED, HALF COUPLING (ASME B16.11) (NOTE 2)
	ASTM A403 GR. WP304/WP304L, WELDED (NOTE 7)	$2^1/_2$ – 24	BUTT WELDING (ASME B16.9), WALL THICKNESS TO MATCH PIPE
		26 – 48	BUTT WELDING (ASME B16.9), WALL THICKNESS TO MATCH PIPE
FLANGES:	ASTM A182 GR. F304/304L (NOTE 7)	$^1/_2$ – 2	CLASS 150, SOCKET WELDING, RF, F&D (ASME B16.5)
		$2^1/_2$ – 24	CLASS 150, SLIP-ON, RF, F&D (ASME B16.5)
		$2^1/_2$ – 24	CLASS 150, WELD NECK, RF, F&D, BORED TO MATCH PIPE (ASME B16.5) (NOTE 3)
		$2^1/_2$ – 24	CLASS 300, WELD NECK, RF, F&D, BORED TO MATCH PIPE (ASME B16.5) (NOTE 4)
		26 – 48	CLASS 150, WELD NECK, RF, F&D, BORED TO MATCH PIPE (ASME B16.47, SERIES A)
PLATE:	ASTM A240 GR. 304L	-	-
BOLTING:	ASTM A193, GR. B8M CLASS 2	-	STUD BOLTS, THREADED FULL LENGTH
	ASTM A194, GR. 8M		ASME B18.2.2 HEAVY HEXAGON NUTS
GASKETS:	ASBESTOS-FREE, SPIRAL WOUND	ALL SIZES	(NOTE 5)

PROJECT NAME: FEED Study for Carbon Capture Plant Retrofit
PROJECT NO: 26301

MATERIAL: STAINLESS STEEL **CLASS:** **S1E**
RATING: CLASS 150
CODE: ASME B31.3, PROCESS PIPING CODE

ITEM	MATERIAL SPECIFICATION	SIZE (NPS)	REMARKS
JOINTS:	WELDED, EXCEPT AT FLANGED CONNECTIONS FIELD WELD END PREPARATION AND TRANSITION DETAIL: 3DS-P72G-00004		

BRANCH CONNECTIONS: BRANCH CONNECTION DETAILS: 3DS-P72G-00006

NOTES:

1. THIS PIPING SHALL NOT BE USED WHERE THE DESIGN TEMPERATURE EXCEEDS 427 ºC
2. USE FOR "T" THERMOWELL INSTALLATION ON NPS 4 AND LARGER PIPE WITH NOMINAL WALL THICKNESS OF $^{3}/_{4}$" OR LESS. ALSO REFER TO ENGINEERING DESIGN STANDARD 3DS-P72G-00009, "THERMOWELL INSTALLATION AND FABRICATION DETAILS".
3. WELD NECK FLANGES ARE INTENDED FOR USE IMMEDIATELY NEXT TO BUTT WELDED FITTINGS AND ANYWHERE ELSE WHERE THERE IS A SPECIFIC NEED TO MEET THE LAYOUT DESIGN REQUIREMENTS.
4. CLASS 300 FLANGES SHALL BE USED ONLY WHERE ABSOLUTELY REQUIRED AND AT EQUIPMENT AND/OR OTHER INTERFACE POINTS.
5. FLEXITALLIC STYLE CG WITH FLEXICARB FILLER MATERIAL OR EQUAL WITH 1/8" THICK STAINLESS STEEL CENTERING RING. METAL STRIP USED SHALL BE STAINLESS STEEL TP304.
6. MINIMUM AS-FABRICATED WALL THICKNESS FOR ALL PIPE SIZES IN THIS PIPE CLASS IS 87½ % OF THE SPECIFIED NOMINAL PIPE WALL THICKNESS.
7. PIPE DESIGN IS BASED ON TP 304 MATERIAL. USE DUAL GRADE TP 304/304L STAMPED OR TP304 MATERIAL. DO NOT SUBSTITUTE TP 304L IN LIEU OF DUAL GRADE TP 304/304L MATERIAL.

MATERIAL: STAINLESS STEEL **CLASS:** **S3E**
RATING: CLASS 300 (NOTE 1)
CODE: ASME B31.3, PROCESS PIPING CODE

ITEM	MATERIAL SPECIFICATION	SIZE (NPS)	REMARKS
PIPE:	ASTM A312 GR. TP 304/TP304L EFW (NOTE 5)	1/2 – 2	SCH. 40S
		2 1/2 – 4	SCH. 10S
		6	SCH. 40
		8	SCH. 20
		10 – 12	SCH. 30
		14	SCH. 40S
		16 – 18	SCH. 80S
		20	SCH. 40
		22	SCH. 60
		24	SCH. 40
		26	0.688" NOMINAL WALL THICKNESS
		28	0.750" NOMINAL WALL THICKNESS
		30	0.812" NOMINAL WALL THICKNESS
FITTINGS:	ASTM A182 GR. F304/304L (NOTE 5)	1/2 – 2	CLASS 3000, SOCKET WELDING (ASME B16.11)
		1 & 1 1/4	CLASS 3000, THREADED, HALF COUPLING (ASME B16.11) (NOTE 2)
	ASTM A403 GR. WP304/WP304L, WELDED (NOTE 5)	2 1/2 – 24	BUTT WELDING (ASME B16.9), WALL THICKNESS TO MATCH PIPE
		26 – 30	BUTT WELDING (ASME B16.9), WALL THICKNESS TO MATCH PIPE

PROJECT NAME: FEED Study for Carbon Capture Plant Retrofit
PROJECT NO: 26301

MATERIAL: STAINLESS STEEL **CLASS:** **S3E**
RATING: CLASS 300
CODE: ASME B31.3, PROCESS PIPING CODE

ITEM	MATERIAL SPECIFICATION	SIZE (NPS)	REMARKS
FLANGES:	ASTM A182 GR. F304/304L (NOTE 5)	$^1/_2$ – 2	CLASS 300, SOCKET WELDING, RF, F&D (ASME B16.5)
		$2^1/_2$ – 24	CLASS 300, WELD NECK, RF, F&D, BORED TO MATCH PIPE (ASME B16.5)
		26 – 30	CLASS 300, WELD NECK, RF, F&D, BORED TO MATCH PIPE (ASME B16.47, SERIES A)
PLATE:	ASTM A240 GR. 304L	-	-
BOLTING:	ASTM A193, GR. B8M CLASS 2 ASTM A194, GR. 8M	-	STUD BOLTS, THREADED FULL LENGTH ASME B18.2.2 HEAVY HEXAGON NUTS
GASKETS:	ASBESTOS-FREE, SPIRAL WOUND	ALL SIZES	(NOTE 3)
JOINTS:	WELDED, EXCEPT AT FLANGED CONNECTIONS FIELD WELD END PREPARATION AND TRANSITION DETAIL: 3DS-P72G-00004		

BRANCH CONNECTIONS: BRANCH CONNECTION DETAILS: 3DS-P72G-00006

NOTES:

1. THIS PIPING SHALL NOT BE USED WHERE THE DESIGN TEMPERATURE EXCEEDS 427 ºC
2. USE FOR "T" THERMOWELL INSTALLATION ON NPS 4 AND LARGER PIPE WITH NOMINAL WALL THICKNESS OF $^3/_4$" OR LESS. ALSO REFER TO ENGINEERING DESIGN STANDARD 3DS-P72G-00009, "THERMOWELL INSTALLATION AND FABRICATION DETAILS".
3. FLEXITALLIC STYLE CGI WITH FLEXICARB FILLER MATERIAL OR EQUAL WITH 1/8" THICK STAINLESS STEEL CENTERING RING AND 1/8" THICK STAINLESS STEEL INNER RING. METAL STRIP USED SHALL BE STAINLESS STEEL TP304.
4. MINIMUM AS-FABRICATED WALL THICKNESS FOR ALL PIPE SIZES IN THIS PIPE CLASS IS 87½ % OF THE SPECIFIED NOMINAL PIPE WALL THICKNESS.
5. PIPE DESIGN IS BASED ON TP 304 MATERIAL. USE DUAL GRADE TP 304/304L STAMPED OR TP304 MATERIAL. DO NOT SUBSTITUTE TP 304L IN LIEU OF DUAL GRADE TP 304/304L MATERIAL.

MATERIAL: STAINLESS STEEL **CLASS:** **S6E**
RATING: CLASS 600 (NOTE 5)
CODE: ASME B31.3, PROCESS PIPING CODE

ITEM	MATERIAL SPECIFICATION	SIZE (NPS)	REMARKS
PIPE:	ASTM A312 GR. TP 304/TP304L EFW (NOTE 4)	$^1/_2$ – 2	SCH. 40S
		$2^1/_2$ – 4	SCH. 40S
		6 – 8	SCH. 80S
		10 – 24	SCH. 80
FITTINGS:	ASTM A182 GR. F304/304L (NOTE 4)	$^1/_2$ – 2	CLASS 3000, SOCKET WELDING (ASME B16.11)
		1 & $1^1/_4$	CLASS 3000, THREADED, HALF COUPLING (ASME B16.11) (NOTE 1)
	ASTM A403 GR. WP304/WP304L, WELDED (NOTE 4)	$2^1/_2$ – 24	BUTT WELDING (ASME B16.9), WALL THICKNESS TO MATCH PIPE
FLANGES:	ASTM A182 GR. F304/304L (NOTE 4)	$^1/_2$ – 2	CLASS 600, SOCKET WELDING, RF, F&D (ASME B16.5)
		$2^1/_2$ – 24	CLASS 600, WELD NECK, RF, F&D, BORED TO MATCH PIPE (ASME B16.5)
PLATE:	ASTM A240 GR. 304L	-	-
BOLTING:	ASTM A193, GR. B8M CLASS 2 ASTM A194, GR. 8M	-	STUD BOLTS, THREADED FULL LENGTH ASME B18.2.2 HEAVY HEXAGON NUTS
GASKETS:	ASBESTOS-FREE, SPIRAL WOUND	ALL SIZES	(NOTE 2)
JOINTS:	WELDED, EXCEPT AT FLANGED CONNECTIONS FIELD WELD END PREPARATION AND TRANSITION DETAIL: 3DS-P72G-00004		

BRANCH CONNECTIONS: BRANCH CONNECTION DETAILS: 3DS-P72G-00006

PROJECT NAME: FEED Study for Carbon Capture Plant Retrofit
PROJECT NO: 26301

MATERIAL: STAINLESS STEEL **CLASS:** **S6E**
RATING: CLASS 600 (NOTE 5)
CODE: ASME B31.3, PROCESS PIPING CODE

ITEM	MATERIAL SPECIFICATION	SIZE (NPS)	REMARKS

NOTES:

1. USE FOR "T" THERMOWELL INSTALLATION ON NPS 4 AND LARGER PIPE WITH NOMINAL WALL THICKNESS OF $^{3}/_{4}$" OR LESS. ALSO REFER TO ENGINEERING DESIGN STANDARD 3DS-P72G-00009, "THERMOWELL INSTALLATION AND FABRICATION DETAILS".
2. FLEXITALLIC STYLE CGI WITH FLEXICARB FILLER MATERIAL OR EQUAL WITH 1/8" THICK STAINLESS STEEL CENTERING RING AND 1/8" THICK STAINLESS STEEL INNER RING. METAL STRIP USED SHALL BE STAINLESS STEEL TP304.
3. MINIMUM AS-FABRICATED WALL THICKNESS FOR ALL PIPE SIZES IN THIS PIPE CLASS IS 87½ % OF THE SPECIFIED NOMINAL PIPE WALL THICKNESS.
4. PIPE DESIGN IS BASED ON TP 304 MATERIAL. USE DUAL GRADE TP 304/304L STAMPED OR TP304 MATERIAL. DO NOT SUBSTITUTE TP 304L IN LIEU OF DUAL GRADE TP 304/304L MATERIAL.
5. THIS PIPING SHALL NOT BE USED WHERE THE DESIGN TEMPERATURE EXCEEDS 427 ºC

MATERIAL: STAINLESS STEEL **CLASS:** **S9E**
RATING: CLASS 900 (NOTE 5)
CODE: ASME B31.3, PROCESS PIPING CODE

ITEM	MATERIAL SPECIFICATION	SIZE (NPS)	REMARKS
PIPE:	ASTM A312 GR. TP 304/TP304L SEAMLESS (NOTE 4)	1/2 – 2	SCH. 40S
		2 1/2 – 3	SCH. 40S
		4 – 6	SCH. 80S
		8 – 24	SCH. 100
FITTINGS:	ASTM A182 GR. F304/304L (NOTE 4)	1/2 – 2	CLASS 3000, SOCKET WELDING (ASME B16.11)
		1 & 1 1/4	CLASS 3000, THREADED, HALF COUPLING (ASME B16.11) (NOTE 1)
	ASTM A403 GR. WP304/WP304L, SEAMLESS (NOTE 4)	2 1/2 – 24	BUTT WELDING (ASME B16.9), WALL THICKNESS TO MATCH PIPE
FLANGES:	ASTM A182 GR. F304/304L (NOTE 4)	1/2 – 2	CLASS 1500, SOCKET WELDING, RF, F&D (ASME B16.5)
		2 – 2 1/2	CLASS 1500, WELD NECK, RF, F&D BORED TO MATCH PIPE (ASME B16.5)
		3 – 24	CLASS 900, WELD NECK, RF, F&D, BORED TO MATCH PIPE (ASME B16.5)
PLATE:	ASTM A240 GR. 304L	-	-
BOLTING:	ASTM A193, GR. B8M CLASS 2 ASTM A194, GR. 8M	-	STUD BOLTS, THREADED FULL LENGTH ASME B18.2.2 HEAVY HEXAGON NUTS
GASKETS:	ASBESTOS-FREE, SPIRAL WOUND	ALL SIZES	(NOTE 2)
JOINTS:	WELDED, EXCEPT AT FLANGED CONNECTIONS FIELD WELD END PREPARATION AND TRANSITION DETAIL: 3DS-P72G-00004		

BRANCH CONNECTIONS: BRANCH CONNECTION DETAILS: 3DS-P72G-00006

PROJECT NAME: FEED Study for Carbon Capture Plant Retrofit
PROJECT NO: 26301

MATERIAL: STAINLESS STEEL **CLASS:** **S9E**
RATING: CLASS 900 (NOTE 5)
CODE: ASME B31.3, PROCESS PIPING CODE

ITEM	MATERIAL SPECIFICATION	SIZE (NPS)	REMARKS

NOTES:

1. USE FOR "T" THERMOWELL INSTALLATION ON NPS 4 AND LARGER PIPE WITH NOMINAL WALL THICKNESS OF $^{3}/_{4}$" OR LESS. ALSO REFER TO ENGINEERING DESIGN STANDARD 3DS-P72G-00009, "THERMOWELL INSTALLATION AND FABRICATION DETAILS".
2. FLEXITALLIC STYLE CGI WITH FLEXICARB FILLER MATERIAL OR EQUAL WITH 1/8" THICK STAINLESS STEEL CENTERING RING AND 1/8" THICK STAINLESS STEEL INNER RING. METAL STRIP USED SHALL BE STAINLESS STEEL TP304.
3. MINIMUM AS-FABRICATED WALL THICKNESS FOR ALL PIPE SIZES IN THIS PIPE CLASS IS 87½ % OF THE SPECIFIED NOMINAL PIPE WALL THICKNESS.
4. PIPE DESIGN IS BASED ON TP 304 MATERIAL. USE DUAL GRADE TP 304/304L STAMPED OR TP304 MATERIAL. DO NOT SUBSTITUTE TP 304L IN LIEU OF DUAL GRADE TP 304/304L MATERIAL.
5. MINIMUM DESIGN TEMPERATURE OF -110 ºC

PROJECT NAME: FEED Study for Carbon Capture Plant Retrofit
PROJECT NO: 26301

MATERIAL: STAINLESS STEEL **CLASS:** **SJE**
RATING: CLASS 1500 (NOTE 5)
CODE: ASME B31.3, PROCESS PIPING CODE

ITEM	MATERIAL SPECIFICATION	SIZE (NPS)	REMARKS
PIPE:	ASTM A312 GR. TP 304/TP304L SEAMLESS (NOTE 4)	$^1/_2$ – 1	SCH. 40S
		$1^1/_2$	SCH. 80S
		2	SCH. 160
		$2^1/_2$ – 10	SCH. 160
		12	1.323” NOMINAL WALL THICKNESS
		14	1.452” NOMINAL WALL THICKNESS
		16	1.660” NOMINAL WALL THICKNESS
		18	1.867” NOMINAL WALL THICKNESS
		20	2.075” NOMINAL WALL THICKNESS
		22	2.282” NOMINAL WALL THICKNESS
		24	2.489” NOMINAL WALL THICKNESS
FITTINGS:	ASTM A182 GR. F304/304L (NOTE 4)	$^1/_2$ – $1^1/_2$	CLASS 3000, SOCKET WELDING (ASME B16.11)
		2	CLASS 6000, SOCKET WELDING (ASME B16.11)
		1 & $1^1/_4$	CLASS 3000, THREADED, HALF COUPLING (ASME B16.11) (NOTE 1)
	ASTM A403 GR. WP304/WP304L, SEAMLESS (NOTE 4)	$2^1/_2$ – 24	BUTT WELDING (ASME B16.9), WALL THICKNESS TO MATCH PIPE
FLANGES:	ASTM A182 GR. F304/304L (NOTE 4)	$^1/_2$ – 2	CLASS 1500, SOCKET WELDING, RF, F&D (ASME B16.5)
		$2^1/_2$ – 24	CLASS 1500, WELD NECK, RF, F&D BORED TO MATCH PIPE (ASME B16.5)
PLATE:	ASTM A240 GR. 304L	-	-
BOLTING:	ASTM A193, GR. B8M CLASS 2 ASTM A194, GR. 8M	-	STUD BOLTS, THREADED FULL LENGTH ASME B18.2.2 HEAVY HEXAGON NUTS

PROJECT NAME: FEED Study for Carbon Capture Plant Retrofit
PROJECT NO: 26301

MATERIAL: STAINLESS STEEL **CLASS:** SJE
RATING: CLASS 1500 (NOTE 5)
CODE: ASME B31.3, PROCESS PIPING CODE

ITEM	MATERIAL SPECIFICATION	SIZE (NPS)	REMARKS
GASKETS:	ASBESTOS-FREE, SPIRAL WOUND	ALL SIZES	(NOTE 2)
JOINTS:	WELDED, EXCEPT AT FLANGED CONNECTIONS FIELD WELD END PREPARATION AND TRANSITION DETAIL: 3DS-P72G-00004		

BRANCH CONNECTIONS: BRANCH CONNECTION DETAILS: 3DS-P72G-00006

NOTES:

1. USE FOR "T" THERMOWELL INSTALLATION ON NPS 4 AND LARGER PIPE WITH NOMINAL WALL THICKNESS OF $^{3}/_{4}$" OR LESS. ALSO REFER TO ENGINEERING DESIGN STANDARD 3DS-P72G-00009, "THERMOWELL INSTALLATION AND FABRICATION DETAILS".
2. FLEXITALLIC STYLE CGI WITH FLEXICARB FILLER MATERIAL OR EQUAL WITH 1/8" THICK STAINLESS STEEL CENTERING RING AND 1/8" THICK STAINLESS STEEL INNER RING. METAL STRIP USED SHALL BE STAINLESS STEEL TP304.
3. MINIMUM AS-FABRICATED WALL THICKNESS FOR ALL PIPE SIZES IN THIS PIPE CLASS IS 87½ % OF THE SPECIFIED NOMINAL PIPE WALL THICKNESS.
4. PIPE DESIGN IS BASED ON TP 304 MATERIAL. USE DUAL GRADE TP 304/304L STAMPED OR TP304 MATERIAL. DO NOT SUBSTITUTE TP 304L IN LIEU OF DUAL GRADE TP 304/304L MATERIAL.
5. MINIMUM DESIGN TEMPERATURE OF -110 ºC

MATERIAL: STAINLESS STEEL **CLASS:** **SLE**
RATING: 339 PSIG @ 93 ºC (NOTE 5)
CODE: ASME B31.3, PROCESS PIPING CODE

ITEM	MATERIAL SPECIFICATION	SIZE (NPS)	REMARKS
PIPE:	ASTM A312 GR. TP 304/TP304L SEAMLESS (NOTE 4)	1/2	SCH. 40
		3/4 – 1	SCH. 80S
		1 1/2 – 2	SCH. 160
		2 1/2	SCH. 160
		3 – 6	SCH. XXS
		8	1.106” NOMINAL WALL THICKNESS
		10	1.379” NOMINAL WALL THICKNESS
		12	1.635” NOMINAL WALL THICKNESS
		14	1.795” NOMINAL WALL THICKNESS
		16	2.052” NOMINAL WALL THICKNESS
FITTINGS:	ASTM A182 GR. F304/304L (NOTE 4)	1/2 – 1	CLASS 3000, SOCKET WELDING (ASME B16.11)
		1 1/2 – 2	CLASS 6000, SOCKET WELDING (ASME B16.11)
		1 & 1 1/4	CLASS 6000, THREADED, HALF COUPLING (ASME B16.11) (NOTE 1)
	ASTM A403 GR. WP304/WP304L, SEAMLESS (NOTE 4)	2 1/2 – 16	BUTT WELDING (ASME B16.9), WALL THICKNESS TO MATCH PIPE
FLANGES:	ASTM A182 GR. F304/304L (NOTE 4)	1/2 – 2	CLASS 2500, SOCKET WELDING, RF, F&D (ASME B16.5)
		2 1/2 – 16	CLASS 2500, WELD NECK, RF, F&D BORED TO MATCH PIPE (ASME B16.5)
PLATE:	ASTM A240 GR. 304L	-	-

PROJECT NAME: FEED Study for Carbon Capture Plant Retrofit
PROJECT NO: 26301

MATERIAL: STAINLESS STEEL **CLASS:** **SLE**
RATING: 339 PSIG @ 93 ºC (NOTE 5)
CODE: ASME B31.3, PROCESS PIPING CODE

ITEM	MATERIAL SPECIFICATION	SIZE (NPS)	REMARKS
BOLTING:	ASTM A193, GR. B8M CLASS 2 ASTM A194, GR. 8M	-	STUD BOLTS, THREADED FULL LENGTH ASME B18.2.2 HEAVY HEXAGON NUTS
GASKETS:	ASBESTOS-FREE, SPIRAL WOUND	ALL SIZES	(NOTE 2)
JOINTS:	WELDED, EXCEPT AT FLANGED CONNECTIONS FIELD WELD END PREPARATION AND TRANSITION DETAIL: 3DS-P72G-00004		

BRANCH CONNECTIONS: BRANCH CONNECTION DETAILS: 3DS-P72G-00006

NOTES:

6. USE FOR "T" THERMOWELL INSTALLATION ON NPS 4 AND LARGER PIPE WITH NOMINAL WALL THICKNESS OF $^{3}/_{4}$" OR LESS. ALSO REFER TO ENGINEERING DESIGN STANDARD 3DS-P72G-00009, "THERMOWELL INSTALLATION AND FABRICATION DETAILS".
7. FLEXITALLIC STYLE CGI WITH FLEXICARB FILLER MATERIAL OR EQUAL WITH 1/8" THICK STAINLESS STEEL CENTERING RING AND 1/8" THICK STAINLESS STEEL INNER RING. METAL STRIP USED SHALL BE STAINLESS STEEL TP304.
8. MINIMUM AS-FABRICATED WALL THICKNESS FOR ALL PIPE SIZES IN THIS PIPE CLASS IS 87½ % OF THE SPECIFIED NOMINAL PIPE WALL THICKNESS.
9. PIPE DESIGN IS BASED ON TP 304 MATERIAL. USE DUAL GRADE TP 304/304L STAMPED OR TP304 MATERIAL. DO NOT SUBSTITUTE TP 304L IN LIEU OF DUAL GRADE TP 304/304L MATERIAL.
10. MINIMUM DESIGN TEMPERATURE OF -110 ºC

2021 TECHNICAL REPORT

Front-End Engineering Design (FEED) Study for a Carbon Capture Plant Retrofit to a Natural Gas-Fired Gas Turbine Combined Cycle Power Plant: Appendices, Volume 2

WORK PERFORMED UNDER AGREEMENT
DE-FE0031848
December, 2021

Report Number: DOE-BECHTEL-FE0031848



Sponsoring Program Office: National Energy Technology Laboratory (NETL)
Name of Recipient: Bechtel National, Inc.
Principal Investigator: W. Elliott
Consortium/teaming members: The Electric Power Research Institute (EPRI) as a Sub-Awardee

Front-End Engineering Design (FEED) Study for a Carbon Capture Plant Retrofit to a Natural Gas-Fired Gas Turbine Combined Cycle Power Plant

APPENDICES: Volume 2

WORK PERFORMED UNDER AGREEMENT

DE-FE0031848

December 2021

Final Report, December 2021

Sponsoring Program Office: National Energy Technology Laboratory (NETL)

Name of Recipient: Bechtel National, Inc.

Principal Investigator: W. Elliott

Consortium/teaming members: The Electric Power Research Institute (EPRI) as a Sub-Awardee

DISCLAIMER OF WARRANTIES AND LIMITATION OF LIABILITIES

THIS REPORT WAS PREPARED AS AN ACCOUNT OF WORK SPONSORED BY AN AGENCY OF THE UNITED STATES GOVERNMENT. NEITHER THE UNITED STATES GOVERNMENT NOR ANY AGENCY THEREOF, NOR ANY OF THEIR EMPLOYEES, MAKES ANY WARRANTY, EXPRESS OR IMPLIED, OR ASSUMES ANY LEGAL LIABILITY OR RESPONSIBILITY FOR THE ACCURACY, COMPLETENESS, OR USEFULNESS OF ANY INFORMATION, APPARATUS, PRODUCT, OR PROCESS DISCLOSED, OR REPRESENTS THAT ITS USE WOULD NOT INFRINGE PRIVATELY OWNED RIGHTS. REFERENCE HEREIN TO ANY SPECIFIC COMMERCIAL PRODUCT, PROCESS, OR SERVICE BY TRADE NAME, TRADEMARK, MANUFACTURER, OR OTHERWISE DOES NOT NECESSARILY CONSTITUTE OR IMPLY ITS ENDORSEMENT, RECOMMENDATION, OR FAVORING BY THE UNITED STATES GOVERNMENT OR ANY AGENCY THEREOF. THE VIEWS AND OPINIONS OF AUTHORS EXPRESSED HEREIN DO NOT NECESSARILY STATE OR REFLECT THOSE OF THE UNITED STATES GOVERNMENT OR ANY AGENCY THEREOF.

Table of Contents

Appendix G: Equipment Data Sheets G-1

Appendix H: Line Designation Table H-1

Appendix I: Utility Consumption List..... I-1

Appendix J: Mechanical Equipment List..... J-1

Appendix K: Single Line Diagrams..... K-1

Appendix L: Miscellaneous Electrical Drawings..... L-1

Appendix M: Electric Load Summary M-1

Appendix N: HAZID Worksheet N-1

Appendix O: HAZOP Worksheets O-1

Appendix P: SAS Architecture Diagram..... P-1

Appendix Q: Fire Cause and Effect Diagram..... Q-1

Appendix R: Civil Drawings..... R-1

Appendix S: Architectural Drawings S-1

Appendix T: Soil Analysis..... T-1

Appendix U: Process Water Flows within PCC..... U-1

Appendix V: MEA Safety Data Sheet..... V-1

Appendix W: Not Used..... W-1

Appendix X: Not Used..... X-1

Appendix Y: MEA Suppliers List..... Y-1

Appendix Z: Stripper Energy Balance Comparisons..... Z-1

Table of Contents

(Continued)

Appendix AA: R.R. Bottoms 1930 Patent AA-1

Appendix AB: Signal Exchange AB-1

Appendix AC: Capture Plant Cost Breakdown AC-1

Appendix AD: Responses to DOE NETL Questions on Final Report AD-1

Appendix G: Equipment Data Sheets

26301-000-M5D-BA-00011	Process Data Sheet Flue Gas Blowers
26301-000-M5D-BA-00012	General Package Datasheet - Fogger
26301-000-M5D-CN-00011	Vessel Data Sheet - Absorber
26301-000-M5D-CN-00012	Process Data Sheet Packing - CO2 Absorber
26301-000-M5D-CN-00013	Heat Exchanger (Plate) Data Sheet - Wash Water Cooler
26301-000-M5D-CN-00031	Heat Exchanger (Plate) Data Sheet - Lean/Rich Amine Exanger
26301-000-M5D-CN-00032	Lean Amine Cooler Data Sheet
26301-000-M5D-CN-00041	Semi-Lean/Rich Amine Heat Exchanger
26301-000-M5D-CN-00042	Flash Feed Heater
26301-000-M5D-CN-00043	Flash Feed Heat Exchanger
26301-000-M5D-CN-00051	Vessel Data Sheet - Stripper
26301-000-M5D-CN-00052	Vessel Data Sheet Trays and Packing - Stripper
26301-000-M5D-CN-00053	Heat Exchanger (Plate) Data Sheet Stripper Reboiler
26301-000-M5D-CN-00054	Package Datasheet - Reclaimer
26301-000-M5D-CN-00055	Overhead Stripper Condenser
26301-000-M5D-CY-00001	Process Data Sheets - Tanks
26301-000-M5D-QG-00011	Process Data Sheet CO2 Compressor
26301-000-M5D-QG-00021	Package Datasheet - CO2 Drying Package
26301-000-M5D-QG-00022	CO2 Product Sendout Pumps
26301-000-M5D-QG-00023	CO2 Compressor 3rd Stage Steam Generator
26301-000-M5D-QG-00024	CO2 Compressor 3rd Stage Intercooler
26301-000-M5D-QG-00025	CO2 Product Cooler
26301-000-3SD-MCRA-00001	Mechanical Data Sheet for Air Compressor
26301-000-3SD-MCRA-00002	Mechanical Data Sheet for Air Dryer

CLIENT	:	**U. S. Department of Energy, Office of Fossil Energy, National Energy Technology Laboratory**
PROJECT TITLE	:	**FEED Study for Carbon Capture Plant Retrofit**
JOB NUMBER	:	**26301**
M.R. NUMBER	:	
EQUIPMENT NUMBER	:	MA-101 / MA-102
EQUIPMENT TITLE	:	FLUE GAS BLOWERS
SERIAL NUMBER	:	
CRITICALITY RATING	:	

COMMENTS:

A. Vendor to add all missing data.

B. 2 x 50% blowers to be provided to achieve the required design flowrate. (Note 6)

Acknowledgment: *This material is based upon work supported by the Department of Energy Award Number DE-FE0031848.*

Disclaimer: *This report was prepared as an account of work sponsored by an agency of the United States Government. Neither the United States Government nor any agency thereof, nor any of their employees, makes any warranty, express or implied, or assumes any legal liability or responsibility for the accuracy, completeness, or usefulness of any information, apparatus, product, or process disclosed, or represents that its use would not infringe privately owned rights. Reference herein to any specific commercial product, process, or service by trade name, trademark, manufacturer, or otherwise does not necessarily constitute or imply its endorsement, recommendation, or favoring by the United States Government or any agency thereof. The views and opinions of authors expressed herein do not necessarily state or reflect those of the United States Government or any agency thereof.*

REV	DATE	DESCRIPTION	BY	CHKD	APPD		
1	24-Aug-20	ISSUED FOR INFORMATION	MJC	ADB	MJC/ADB		
0	06-Jul-20	ISSUED FOR INFORMATION	AAR	DT	MJC/ADB		

DESIGN DATA

	GAS CIRCULATED : FLUE GAS						
	SERVICE (LETHAL / CORROSIVE / EROSIVE) : N/A						
	CONTAMINANTS : SOLIDS (e.g. TYPE, SIZE, DISTRIBUTION, DESCRIPTION) : NONE						
	OPERATION : CONTINUOUS			No. OF STARTS PER HOUR : N/A			
	PRELIM. BLOWER SELECTION: (Note 1)			DRIVER TYPE : ELECTRIC			
	FLUID PROPERTIES (Note 2)						
	DENSITY @ PT		kg/m^3 1.056	MOLECULAR WEIGHT			28.15
	SPECIFIC GRAVITY (S.G.) @ PT		0.972	Cp/Cv VALUE @ PT			1.384
	COMPRESSIBILITY FACTOR		0.999				
	FLOWRATE (Note 6)			TEMPERATURE			
1	NORMAL FLOW	for each 50% blower	kg/hr 1,292,428	NORMAL FLUID TEMPERATURE	°C		47.8
1	NORMAL FLOW	for each 50% blower	Nm^3/hr 1,028,952	DESIGN TEMPERATURE	°C		100
1	DESIGN FLOW	for each 50% blower	kg/hr 1,421,671	MAX OPERATING TEMPERATURE	°C		60
1	DESIGN FLOW	for each 50% blower	Nm^3/hr 1,131,847	MIN OPERATING TEMPERATURE	°C		20

HYDRAULIC CALCULATION (Note 3)

	SUCTION CONDITION				DISCHARGE CONDITION (Note 4)			
	DESIGN FLOWRATE	for each 50% blower	Nm^3/hr	1,131,847	DESIGN FLOWRATE	for each 50% blower	Nm^3/hr	1,131,847
	ORIGIN PRESSURE		kPa A	100.0	DESTINATION PRESSURE		kPa A	108.7
1	- LINE LOSS (Note 7)		kPa	3.0	- LINE LOSS		kPa	0.1
1	- P CONTROL VALVES - DAMPERS		kPa		- P CONTROL VALVES		kPa	
	- P ORIFICES		kPa		- P ORIFICES		kPa	
	- P EXCHANGERS		kPa		- P EXCHANGERS		kPa	
	- P FURNACES		kPa		- P FURNACES		kPa	
	- P FILTERS		kPa		- P FILTERS		kPa	
	- P SILENCERS		kPa		- P SILENCERS		kPa	
	- P PULSATION BOTTLES		kPa		- P PULSATION BOTTLES		kPa	
1	- P OTHERS		kPa		- P OTHERS		kPa	
1	- P CONTINGENCY		kPa		- P CONTINGENCY (Note 5)		kPa	1.0
1	= BLOWER SUCTION PRESSURE		kPa A	97.0	= BLOWER DISCHARGE PRESSURE		kPa A	109.8
	BLOWER FACTOR @ DISCHARGE				BLOWER FACTOR @ DISCHARGE			

	DIFFERENTIAL PRESSURE			GAS COMPOSITION : MOL %			
1	DISCHARGE PRESSURE	kPa A	109.8	Oxygen	12.1579	MEA	NIL
1	- SUCTION PRESSURE	kPa A	97.0	Nitrogen	72.8237	Argon	0.8297
1	TOTAL BLOWER DIFFERENTIAL PRESS	kPa A	12.8	Water	10.4374	NO	0.0002
	COMPRESSION RATIO (Pd/Ps)		1.1318	Carbon Dioxide	3.7498	NO2	0.00002
	BLOWER SUCTION TEMP	°C	47.8	Sulfur Dioxide	Trace	NH3	0.0008
1	BLOWER DISCHARGE TEMP.	°C	By vendor				
1	BLOWER POWER	kW	By vendor				

NOTES

1 TO BE CONFIRMED BY FINAL MECHANICAL DESIGN
2 FLUID PROPERTIES LISTED AT SUCTION CONDITIONS
3 HYDRAULIC CALCULATION VALUES ARE PRELIMINARY AND SHOULD BE CONFIRMED WHEN FINAL SYSTEM DETAILS ARE KNOWN.
4 BLOWER DISCHARGE CONDITIONS TAKEN AT THE INLET TO THE AMINE ABSORBERS.
1 5 ASSUMES FLOW CONTROL.BY BLOWER VFD
1 6 2 x 50% BLOWERS TO BE PROVIDED TO ACHIEVE THE TOTAL DESIGN FLOW RATE OF 2263694 Nm^3/hr
1 7 INCLUDES FOGGER.
1

CLIENT	:	**U. S. Department of Energy, Office of Fossil Energy, National Energy Technology Laboratory**
PROJECT TITLE	:	**FEED Study for Carbon Capture Plant Retrofit**
JOB NUMBER	:	**26301**
M.R. NUMBER	:	
EQUIPMENT NUMBER	:	MS-101 A/B/C
EQUIPMENT TITLE	:	FLUE GAS WATER FOGGER SYSTEM
SERIAL NUMBER	:	
CRITICALITY RATING	:	

COMMENTS:

* VENDOR TO COMPLETE DATA MARKED WITH ASTERISK.

Acknowledgment: This material is based upon work supported by the Department of Energy Award Number DE-FE0031848.

Disclaimer: This report was prepared as an account of work sponsored by an agency of the United States Government. Neither the United States Government nor any agency thereof, nor any of their employees, makes any warranty, express or implied, or assumes any legal liability or responsibility for the accuracy, completeness, or usefulness of any information, apparatus, product, or process disclosed, or represents that its use would not infringe privately owned rights. Reference herein to any specific commercial product, process, or service by trade name, trademark, manufacturer, or otherwise does not necessarily constitute or imply its endorsement, recommendation, or favoring by the United States Government or any agency thereof. The views and opinions of authors expressed herein do not necessarily state or reflect those of the United States Government or any agency thereof.

REV	DATE	DESCRIPTION	BY	CHKD	APPD
0	22-Dec-20	Issued for Information	MJC	AGB	MJC/AGB

BECHTEL	**Package Data Sheet - Flue Gas Water Fogger System**	JOB No	**26301**
		DATA SHEET No.	REV
		Bechtel: 26301-000-M5D-BA-00012 Owner: NOT USED	0
		SHEET 1 OF 4	

CLIENT & LOCATION : U. S. Department of Energy, Office of Fossil Energy, National Energy Technology Laboratory		EQUIPMENT No :	MS-101 A/B/C
PROJECT :		UNIT :	
SERVICE OF UNIT :	Flue Gas Fogger System		
SUPPLIER :		P&ID REFERENCE DRAWING :	

PROCESS STREAM INPUT 1 (Note 3)				**PROCESS STREAM OUTPUT 1 (Note 3)**			
Fluid / Gas Name:	**Flue Gas Feed**			Fluid / Gas Name:	**Flue Gas Blower Inlet**		
Flowrate: Norm	**2.10882**		x 10^6 Std m³/h	Flowrate: Norm	**2.17510**		x 10^6 Std m³/h
Supply Conditions	Pres. kPa A	Temp.	°C	Supply Conditions	Pres. kPa A	Temp.	°C
Normal	100.0	92.2		Normal	100.0	47.8	

PROCESS STREAM INPUT 2 (Note 4)				**PROCESS STREAM OUTPUT 2 (Note 4)**			
Fluid / Gas Name:	**Flue Gas Blower Outlet**			Fluid / Gas Name:	**Quenched Flue Gas to Absorber**		
Flowrate: Norm	**2 x 1.08755**		x 10^6 Std m³/h	Flowrate: Norm	**2 x 1.09477**		x 10^6 Std m³/h
Supply Conditions	Pres. kPa A	Temp.	°C	Supply Conditions	Pres. kPa A	Temp.	°C
Normal	108.7	60.4		Normal	108.7	51.0	

PROCESS STREAM INPUT 3				**PROCESS STREAM INPUT 4**			
Fluid / Gas Name:	**Process Water Supply**			Fluid / Gas Name:			
Flowrate: Sum / Norm / Win	**61456**		kg/h	Flowrate: Norm			kg/h
Flowrate: Norm	Pres. kPa A	Temp.	°C	Supply Conditions	Pres. kPa A	Temp.	°C
Normal	3547.0	48.3		Normal			

UTILITIES			
INSTRUMENT AIR			
Instrument air consumption	*	Nm³/h / Sm³/h	
Supply Conditions	Pres. kPa g	Temp.	°C
Minimum			
Normal	700	38	
Maximum			
Design	1170	66	
PLANT AIR			
Plant air consumption	*	Nm³/h / Sm³/h	
Supply Conditions	Pres. kPa g	Temp.	°C
Minimum			
Normal	700	38	
Maximum			
Design	1170	66	

	CLIENT & LOCATION : U. S. Department of Energy, Office of Fossil Energy, National Energy Technology Laboratory	EQUIPMENT No :	MS-101 A/B/C
	PROJECT :	UNIT :	
	SERVICE OF UNIT : Flue Gas Fogger System		
	SUPPLIER :	P&ID REFERENCE DRAWING :	

PROCESS & MECHANICAL DESIGN CONDITIONS

Package Sketch

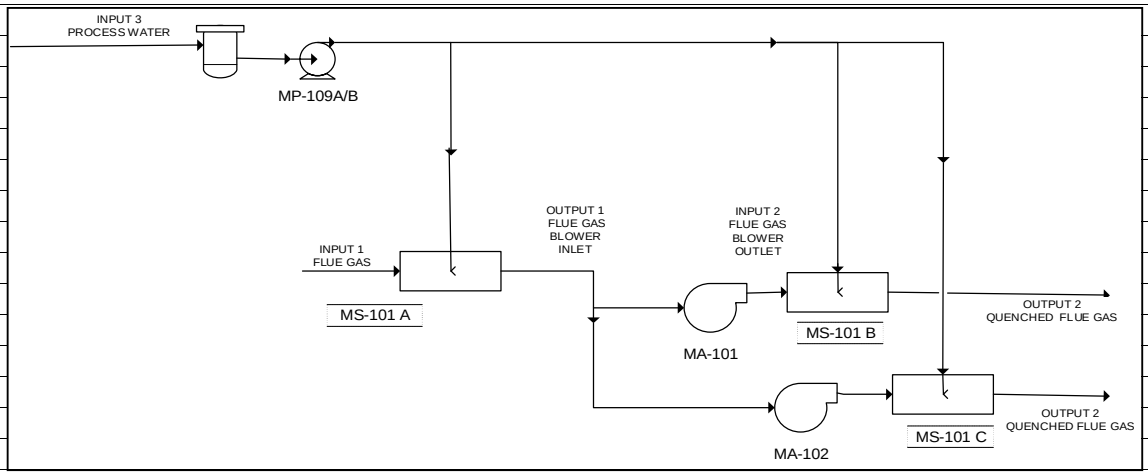

COMPOSITION OF FLUE GAS (% MOLE)

OXYGEN	12.540
NITROGEN	75.112
WATER	7.625
CO2	3.866
ARGON	0.856

NOTES:

1. VENDOR TO ENSURE FLUE GAS REMAINS DRY AFTER MS-101A AND MAXIMISE WATER SATURATION OF FLUE GAS AFTER MS-101B/C.
2. VENDOR TO PROVIDE SPRAY WATER CONTROL VALVE AND NOZZLES FOR EACH FOGGER (3 OFF)
3. PRIMARY FOGGING (MS-101A) INLET, OUTLET STREAMS
4. SECONDARY FOGGING (MS-101B/C) INLET, OUTLET STREAMS
5. ASTERISKS DENOTE INFORMATION TO BE PROVIDED BY VENDOR
6. DISTRIBUTED NOZZLE SUPPORT STRUCTURE (STAINLESS STEEL) TO BE PROVIDED FOR;
   MS-101A DUCT IS 20'4" x 20"4"
   MS-101B/C DUCTS ARE 14'4" x 14'4"

	CLIENT & LOCATION : U. S. Department of Energy, Office of Fossil Energy, National Energy Technology Laboratory	EQUIPMENT No : MS-101 A/B/C
	PROJECT :	UNIT :
	SERVICE OF UNIT : Flue Gas Fogger System	
	SUPPLIER :	P&ID REFERENCE DRAWING :

PROCESS & MECHANICAL DESIGN CONDITIONS

LOCATION: o Indoors o Heated o Saline Ambient Temperature: Max 43.3 °C
● Outdoors o Unheated o Desert Min -9.4 °C

Electrical Area Hazard: ● Hazardous o Non-Hazardous Zone: Group: Temp. Class:

Site Data:

Noise & Other Emissions:

Overall Plant Dimensions: Length: * m Width * m Height: * m

Weight: Fabricated: * kg Shipping: * kg Installed: * kg Operating: * kg

TERMINAL CONNECTIONS

SERVICE:	SIZE	CODE	RATING	FACING	PACKAGING	PIPING SPEC
FLUE GAS DUCTING (BLOWER INLET)	TBA					
FLUE GAS DUCTING (BLOWER OUTLET)	TBA					
INSTRUMENT AIR SUPPLY	50MIN		150#	RF		
PROCESS WATER TO PACKAGE (Note 5)	100*		600#	RF		

MATERIALS OF CONSTRUCTION

VENDOR TO ADVISE

CLIENT	:	**U. S. Department of Energy, Office of Fossil Energy, National Energy Technology Laboratory**
PROJECT TITLE	:	**FEED Study for Carbon Capture Plant Retrofit**
JOB NUMBER	:	**26301**
M.R. NUMBER	:	
EQUIPMENT NUMBER	:	T-101, T-102
EQUIPMENT TITLE	:	CO_2 ABSORBER
SERIAL NUMBER	:	
CRITICALITY RATING	:	

COMMENTS:

1. Two identical vessels are required
2. Refer to 26301-000-M5D-CN-00012 for column internal details.
3. Internals vendor to provide all internals including distributors and demisters.

Acknowledgment: *This material is based upon work supported by the Department of Energy Award Number DE-FE0031848.*

Disclaimer: *This report was prepared as an account of work sponsored by an agency of the United States Government. Neither the United States Government nor any agency thereof, nor any of their employees, makes any warranty, express or implied, or assumes any legal liability or responsibility for the accuracy, completeness, or usefulness of any information, apparatus, product, or process disclosed, or represents that its use would not infringe privately owned rights. Reference herein to any specific commercial product, process, or service by trade name, trademark, manufacturer, or otherwise does not necessarily constitute or imply its endorsement, recommendation, or favoring by the United States Government or any agency thereof. The views and opinions of authors expressed herein do not necessarily state or reflect those of the United States Government or any agency thereof.*

REV	DATE	DESCRIPTION	BY	CHKD	APPD		
2	20-Aug-20	ISSUED FOR INFORMATION	MJC	ADB	MJC/ADB		
1	24-Jul-20	ISSUED FOR INFORMATION	MJC	DT	MJC/ADB		
0	26-Jun-20	ISSUED FOR INFORMATION	AAR	DT	MJC/ADB		

BECHTEL

Vessel Data Sheet - CO_2 Absorber

JOB No **26301**

DATA SHEET No. REV

Bechtel: 26301-000-M5D-CN-00011 2
Owner: NOT USED

SHEET 1 OF 2

REVISION

CLIENT & LOCATION :	U. S. Department of Energy, Office of Fossil Energy, National Energy Technology Laboratory	EQUIPMENT No : T-101, T-102
PROJECT :	FEED Study for Carbon Capture Plant Retrofit	UNIT :

Rev

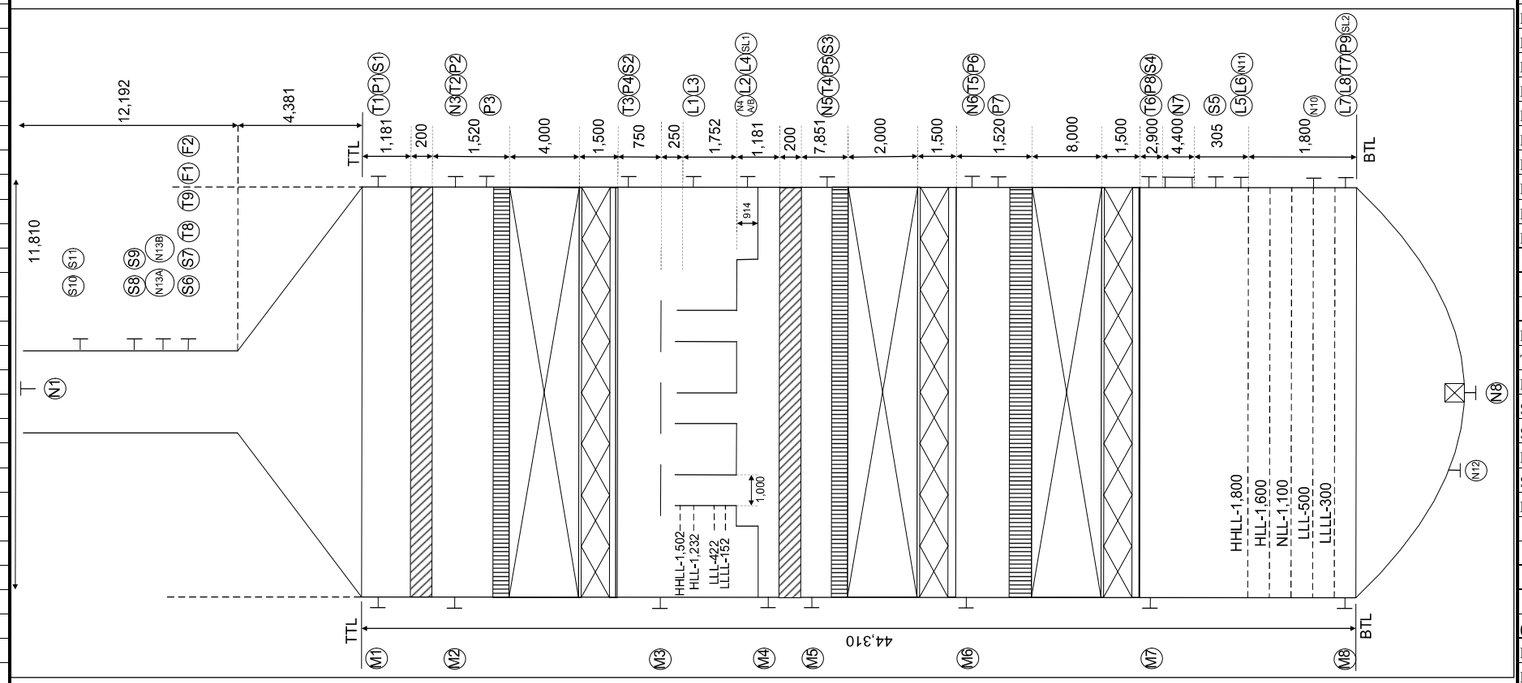

PROCESS NOZZLE DATA

REF	SIZE mm (NS)	RATING	DIMENSION Y	DIMENSION Z	PLAN ORIENT	SERVICE	REMARKS
N1	3,048	N/A				Vapor Outlet	Flue gas exhaust
N3	500	150 #				Wash Water Return	
N4A/B	600	150 #				Wash Water Draw-off	
N5	400	150 #				Lean Amine	
N6	200	150 #				Sem-lean Amine	
N7		N/A	4,400	4,400		Vapor Feed	4.4x4.4m Duct
N8	600	150 #				Rich Amine Out	
N10	600	150 #				Equalizing	
N11	200	150 #				Pump Min. Flow Return	
N12	150	150 #				Drain	
N13A/B	600	150 #				Dry / Wet Vent Headers	

INSTRUMENT / MECHANICAL NOZZLE DATA

REF	SIZE mm (NS)	RATING	DIMENSION Y	DIMENSION Z	PLAN ORIENT	SERVICE	REMARKS
M1-M8	762	150 #				Manway	
T1-T9	50	150 #				Temperature	
P1-P9	50	150 #				Pressure	
S1-S5	50	150 #				Gas Sample	
SL1, SL2	50	150 #				Liquid Sample	
L1-L8	50	150 #				Level	
S6-S11	150	150 #				Gas Sample	2off every 3048mm
F1, F2	50	150 #				Flow	

PROCESS OPERATING DATA

REF	FLUID	FLOW	DENSITY	TEMPERATURE °C NORM	TEMPERATURE °C MAX	TEMPERATURE °C MIN	PRESSURE kPa g NORM	PRESSURE kPa g MAX	PRESSURE kPa g MIN
(Note 5)		kg/hr	kg/m3						
N1	Flue Gas	1,237,512	1.03	49.3			ATM		
N3	Wash Water	1,366,188	994.3	37.6			244.5		
N4A/B	Wash Water	700,540	987.4	53.9			3.2		
N5	Amine	1,109,585	1,098.8	49.1			298.9		
N6	Amine	278,064	1,150.5	57.4			432.8		
N7	Flue Gas	1,297,928	1.13	51.0			8.7		
N8	Amine	1,413,173	1,158.5	52.1			8.7		
N10	Amine	1,413,173	1,158.5	52.1			8.7		
N13A/B	Vent Gases	NNF							

M/R NUMBER	
CODE	
SPECIFICATION	

DESIGN DATA

	PRESS	TEMP
	kPag	°C
MAX EXPECT. DESIGN PRESS. & CORRES. TEMP	10	100
MAX EXPECT. DESIGN TEMP. & CORRES. PRESS		
2 EXTERNAL DESIGN COND. (MAX/MIN TEMP)	-65	60
SYSTEM PSV SET AT	N/A	

CORROSION ALLOWANCE mm	
INTERNAL CLADDING mm	
RADIOGRAPHY	
DESIGN WIND SPEED m/s	
EARTHQUAKE DESIGN	
POST WELD HEAT TREATMENT REQ'D FOR	
HYDRO' TEST PRESSURE TO COMPLY WITH	
MOMENT ON BASE	
GOVERNED BY	

VESSEL WT	SHIPPING	OPERATING	TEST

MATERIALS

SHELL & HEADS	SS304L	
INTERNAL CLADDING	NIL	
REINFORCEMENT RINGS		
PLATE NECKS		
PIPE		
FORGINGS		
SUPPORTS		
DEMISTER PAD		
INTERNALS		
INTERNAL BOLTS		
INTERNAL NUTS		
EXTERNAL FLANGE BOLTS		
EXTERNAL FLANGE NUTS		
GASKETS		
EXTERNAL PREPARATION		
SHOP PAINT		
INTERNAL PREPARATION		
INTERNA HS		
INSULATION		
FIREPROOFING		

REFERENCE DRAWINGS

SUPPORT SKIRT	
MANWAY DAVIT / HINGE	
MISCELLANEOUS SUPPORT CLIPS	
INSULATION SUPPORTS	
ANCHOR BOLTS, LUGGS & BASE PLATE	
PRESSURE VESSEL TOLERANCES	
DETAILS OF CLAD NOZZLES	
NOZZLES AND MANWAYS	
MISCELLANEOUS INTERNALS	
NAME PLATE	
MISCELLANEOUS CLIPS AS BELOW & AS PER DRAWINGS	
OTHER DETAILS :	

NOTES

1. All dimension in mm except where stated otherwise.
2. Residence time of 6 mins provided for rich amine in column bottom (LLL - HLL).
3. Residence time of 5 mins for wash water in pan (LLLL - HHLL). (3 mins LLL-HLL)
4. ASTM flanged and dished bottom heads to be used on the Absorbers
5. Flowrate for N4 A/B reported per each nozzle.
6. Vessel includes top cone section and stack

BECHTEL

Vessel Data Sheet - CO_2 Absorber

JOB No	26301	
DRAWING No		REV
Bechtel: 26301-000-M5D-CN-00011 Owner: NOT USED		2
SHEET No.	2 OF	2

CLIENT	:	**U. S. Department of Energy, Office of Fossil Energy, National Energy Technology Laboratory**
PROJECT TITLE	:	**FEED Study for Carbon Capture Plant Retrofit**
JOB NUMBER	:	**26301**
M.R. NUMBER	:	
EQUIPMENT NUMBER	:	T-101, T-102
EQUIPMENT TITLE	:	CO_2 ABSOBER - INTERNALS
SERIAL NUMBER	:	
CRITICALITY RATING	:	

COMMENTS:

1. Packing is for the CO_2 absorbers
2. For datasheet of vessel refer to 26301-000-M5D-CN-00011
3. Vendor to rate packing design and advise suitability.
4. Two sets of internals required for two identical columns.
5. Vendor to provide all internals including distributors and demisters.

Acknowledgment: *This material is based upon work supported by the Department of Energy Award Number DE-FE0031848.*

Disclaimer: *This report was prepared as an account of work sponsored by an agency of the United States Government. Neither the United States Government nor any agency thereof, nor any of their employees, makes any warranty, express or implied, or assumes any legal liability or responsibility for the accuracy, completeness, or usefulness of any information, apparatus, product, or process disclosed, or represents that its use would not infringe privately owned rights. Reference herein to any specific commercial product, process, or service by trade name, trademark, manufacturer, or otherwise does not necessarily constitute or imply its endorsement, recommendation, or favoring by the United States Government or any agency thereof. The views and opinions of authors expressed herein do not necessarily state or reflect those of the United States Government or any agency thereof.*

REV	DATE	DESCRIPTION	BY	CHKD	APPD		
1	14-Aug-20	ISSUED FOR INFORMATION	MJC	DT	MJC/ADB		
0	26-Jun-20	ISSUED FOR INFORMATION	AAR	DT	MJC/ADB		

BECHTEL

Process Data Sheet Packing - CO_2 Absorber

JOB No	**26301**	
Process	DATA SHEET No.	REV
Bechtel: 26301-000-M5D-CN-00012 Owner: NOT USED		1
SHEET	1 OF 3	

REVISION

CLIENT: U. S. Department of Energy, Office of Fossil Energy, National Energy Technology Laboratory	EQUIPMENT No : T-101, T-102
PROJECT : FEED Study for Carbon Capture Plant Retrofit	UNIT :
SERVICE OF UNIT : CO2 ABSOBER - INTERNALS	VESSEL REFERENCE DRAWING : 26301-000-M5D-CN-00011
SUPPLIER :	INTERNAL DETAILS REFERENCE DRAWING :

PROCESS DESIGN DATA

PACKED BED LOCATION				
BED DESCRIPTION / LOCATION		Wash Water/Top	Amine/Middle	Amine/Bottom
THEORETICAL STAGES FROM TOP		1-2	3	4-7
CONDITIONS AT STAGE				
VAPOUR TO STAGE				
FLOW	kg/hr	*	*	*
MOLECULAR WEIGHT		*	*	*
TEMPERATURE	°C	*	*	*
PRESSURE	kPa(a)	*	*	*
DENSITY	kg/m³	*	*	*
VOLUME FLOW	m³/hr	*	*	*
LIQUID FROM STAGE				
FLOW	kg/hr	*	*	*
MOLECULAR WEIGHT		*	*	*
TEMPERATURE	°C	*	*	*
DENSITY	kg/m³	*	*	*
VOLUME FLOW (@ OPERATING TEMP & PRESS)	m³/hr	*	*	*
VISCOSITY	cP	*	*	*
SURFACE TENSION	Dynes/cm	*	*	*

PACKED BED DESIGN SPECIFICATION

DESIGN RATE, % OF INDICATED L & V RATES		By Vendor	By Vendor	By Vendor
MIN. OPER. RATE, % OF INDICATED L & V RATES (TURNDOWN)		50	50	50
TOTAL ALLOWABLE TOWER ΔP	kPa	8-Note 2	8-Note 2	8-Note 2
ΔP /METRE PACKING, MAX ALLOWABLE	cm.H2O/mmHg			
FOAMING TENDENCY (NONE/MODERATE/HIGH/SEVERE)		None - Note 1	Moderate-Note 1	Moderate-Note 1
FOULING CONSIDERATION (NONE / SEE REMARK No.)		Low - Note 3	Low - Note 3	Low - Note 3
REQUIRED NUMBER OF THEORETICAL STAGES		2	1	4
PACKING MATERIAL OF CONSTRUCTION		SS 304L	SS 304L	SS 304L
PACKED BED MATERIAL OF CONSTRUCTION				
MAX. EXPECTED DIFFERENTIAL PRESSURE	kPa	By Vendor	By Vendor	By Vendor
MAX/MIN EXPECTED OPERATING TEMPERATURE	°C			
SPECIAL REMARKS (ALSO SEE REMARKS SECTION BELOW)				

PACKED BED DETAILS (TO BE VERIFIED BY VENDOR)

COLUMN DIAMETER	mm	11,810	11,810	11,810
PACKING TYPE		Structured	Structured	Structured
ESTIMATED BED HEIGHT (EXISTING)	mm			
DISTRIBUTOR TYPE		Gravity	Gravity	Gravity
BED SUPPORT TYPE	m	Lattice	Lattice	Lattice
BED HOLDOWN TYPE				
OTHER INTERNAL TYPE				

PACKED BED DETAILS (BY VENDOR)

MAXIMUM % OF FLOOD ALLOWABLE		80%	80%	80%
% OF FLOOD @ DESIGN, CALCULATED				
ΔP /METRE, ACTUAL	cm.H2O/mmHg			
PACKING EFFICIENCY - HETP	m			
ACTUAL BED HEIGHT	m			
PACKING STYLE IDENTIFIED				
DISTRIBUTOR STYLE IDENTIFIED				
BED SUPPORT STYLE IDENTIFIED				
BED HOLDOWN STYLE IDENTIFIED				
OTHER INTERNAL STYLE IDENTIFIED				
PACKING BULK DENSITY	kg/m³			

NOTES

* Refer to sheet 3 for Vapour/Liquid Profile and Properties

1) System Factor of 0.85, for amine service. System factor of 1.0 for wash water service.

2) To include inlet (1 kPa), outlet (1 kPa), demister, internal trays and packing. Amine (liquid) viscosity of 50% higher than reported in Sheet 3 shall be considered for pressure drop evaluation. No additional allowance shall be considered for viscosity excursion.

3) Vendor to recommend measures taken to avoid fouling in amine service based on amine service experience.

4) Stages 1-2 are wash water, 3-7 are amine service.

BECHTEL

PROCESS DATA SHEET
PACKED BED

JOB No	26301		
DRAWING No			REV
Bechtel: 26301-000-M5D-CN-00012 Owner: NOT USED			1
SHEET No.	2	OF	3

	CLIENT: U. S. Department of Energy, Office of Fossil Energy, National Energy Technology Laboratory	EQUIPMENT No : T-101, T-102
	PROJECT : FEED Study for Carbon Capture Plant Retrofit	UNIT :
	SERVICE OF UNIT : CO2 ABSOBER - INTERNALS	VESSEL REFERENCE DRAWING : 26301-000-M5D-CN-00011
	SUPPLIER :	INTERNAL DETAILS REFERENCE DRAWING :

PROCESS DESIGN DATA

Wash Water Section - Vapor Phase Properties

Stage	Temperature	Pressure	Molecular Weight	Mass Density	Mass Flow	Mass Cp	Dynamic Viscosity	Thermal Conductivity
	°C	kPa	kg/kmol	kg/m^3	kg/h	kJ/(kg*°C)	cP	W/(m*°C)
1	49.3	100.7	27.52	1.034	1,237,512	1.084	0.0188	0.0272
2	53.9	103.2	27.23	1.034	1,262,464	1.100	0.0189	0.0275

Wash Water Section - Liquid Phase Properties

Stage	Temperature	Pressure	Molecular Weight	Mass Density	Mass Flow	Mass Cp	Dynamic Viscosity	Thermal Conductivity
	°C	kPa	kg/kmol	kg/m^3	kg/h	kJ/(kg*°C)	cP	W/(m*°C)
1	49.3	100.7	18.25	989.4	1,391,140	4.137	0.5819	0.6242
2	53.9	103.2	18.25	987.4	1,401,079	4.138	0.5380	0.6287

Amine Section - Vapor Phase Properties

Stage	Temperature	Pressure	Molecular Weight	Mass Density	Mass Flow	Mass Cp	Dynamic Viscosity	Thermal Conductivity
	°C	kPa	kg/kmol	kg/m^3	kg/h	kJ/(kg*°C)	cP	W/(m*°C)
1	57.4	103.2	27.14	1.020	1,272,403	1.107	0.0190	0.0277
2	57.3	104.6	27.29	1.039	1,290,276	1.103	0.0189	0.0277
3	55.1	105.9	27.63	1.073	1,297,303	1.090	0.0189	0.0274
4	53.2	107.3	27.88	1.103	1,298,608	1.080	0.0188	0.0273
5	52.1	108.7	28.01	1.127	1,298,092	1.074	0.0188	0.0272

Amine Section - Liquid Phase Properties

Stage	Temperature	Pressure	Molecular Weight	Mass Density	Mass Flow	Mass Cp	Dynamic Viscosity	Thermal Conductivity
	°C	kPa	kg/kmol	kg/m^3	kg/h	kJ/(kg*°C)	cP	W/(m*°C)
1	57.4	103.2	25.38	1,114.2	1,127,458	3.306	1.8283	0.4037
2	57.3	104.6	25.80	1,138.7	1,412,549	3.229	2.1014	0.3892
3	55.1	105.9	26.00	1,149.8	1,413,854	3.198	2.3664	0.3820
4	53.2	107.3	26.11	1,155.5	1,413,338	3.180	2.5761	0.3779
5	52.1	108.7	26.17	1,158.5	1,413,173	3.170	2.7050	0.3757

NOTES

5) Loads apply to one Absorber only

6) Vapor flow and properties are for Vapor From Stage

7) Liquid flow and properties are for Liquid From Stage

8) Liquid is 35%wt MEA aqueous solution

9) Liquid Phase Properties - Surface Tension (dynes/cm)

Wash Water Section - Stage 1	67.7
Wash Water Section - Stage 2	66.8
Amine Section - Stage 1	58.0
Amine Section - Stage 2	92.6
Amine Section - Stage 3	94.8
Amine Section - Stage 4	95.9
Amine Section - Stage 5	96.5

CLIENT	:	**U. S. Department of Energy, Office of Fossil Energy, National Energy Technology Laboratory**
PROJECT TITLE	:	**FEED Study for Carbon Capture Plant Retrofit**
JOB NUMBER	:	**26301**
M.R. NUMBER	:	
EQUIPMENT NUMBER	:	ME-101 / ME-104
EQUIPMENT TITLE	:	WASH WATER COOLER (ABSORBERS 1 & 2)
SERIAL NUMBER	:	
CRITICALITY RATING	:	

COMMENTS:

A. Vendor to add all missing data.

B. 2x100% exchangers to be provided, each capable of achieving the duty as specified. Alternative arrangements of 4x50% exchangers or 6x33% exchangers will be considered.

C. Data in this datasheet is for 1x100% exchanger.

D. Standard non-welded plate and frame exchangers are acceptable.

Acknowledgment: *This material is based upon work supported by the Department of Energy Award Number DE-FE0031848.*

Disclaimer: *This report was prepared as an account of work sponsored by an agency of the United States Government. Neither the United States Government nor any agency thereof, nor any of their employees, makes any warranty, express or implied, or assumes any legal liability or responsibility for the accuracy, completeness, or usefulness of any information, apparatus, product, or process disclosed, or represents that its use would not infringe privately owned rights. Reference herein to any specific commercial product, process, or service by trade name, trademark, manufacturer, or otherwise does not necessarily constitute or imply its endorsement, recommendation, or favoring by the United States Government or any agency thereof. The views and opinions of authors expressed herein do not necessarily state or reflect those of the United States Government or any agency thereof.*

REV	DATE	DESCRIPTION	BY	CHKD	APPD		
0	06-Jul-20	ISSUED FOR INFORMATION	AAR	DT	MJC/ADB		

BECHTEL

Heat Exchanger (Plate) Data Sheet - Wash Water Cooler

JOB No	**26301**	
DATA SHEET No.		REV
Bechtel: 26301-000-M5D-CN-00013 Owner: NOT USED		0
SHEET	1 OF 4	

Applicable To: ☐ Proposal ☐ Purchase ☐ As Built ☐ ASME ☐ API ☐ Other _____

Manufacturer _____ Model _____ Serial No. _____

GENERAL DATA

			1		2		3		4	
Stream Number			1		2		3		4	
Stream Name			WASH WATER (Notes 3, 4)		COOLING WATER (Note 3)					
Fluid Quantity			IN	OUT	IN	OUT	IN	OUT	IN	OUT
Vapor		kg/h	-	-	-	-				
Liquid		kg/h	1,360,777	1,360,777	2,046,343	2,046,343				
Steam		kg/h	-	-	-	-				
Water		kg/h	-	-	-	-				
Non-Condensable		kg/h	-	-	-	-				
Temperature		°C	53.9	37.6	28.6	39.4				
Vapor			-	-	-	-				
Density		kg/m³	-	-	-	-				
Viscosity		Pa.s	-	-	-	-				
Thermal Conductivity		W/(m-K)	-	-	-	-				
Specific Heat		kj/(kg-K)	-	-	-	-				
Molecular Weight			-	-	-	-				
Liquid			-	-	-	-				
Density		kg/m³	987.4	994.3	995.5	991.8				
Viscosity		Pa.s	0.00054	0.00072	0.00084	0.00068				
Thermal Conductivity		W/(m-K)	0.629	0.611	0.611	0.625				
Specific Heat		kj/(kg-K)	4.138	4.136	4.181	4.176				
Pressure		kPag	348		200					
Velocity		m/s								
Latent Heat		kj/kg								
Pressure Drop	Allow.	kPa	100		70					
Pressure Drop	Calc.	kPa								
Fouling Factor		m²-°C/W	(Note 1)		(Note 1)					
Number of Passes										
Heat Exchanged		kW	**25,590**		**25,590**					
MTD		°C								
Transfer Rate	Clean	kW/(m²-K)								
Transfer Rate	Service	kW/(m²-K)								

CONSTRUCTION

Number of Plate Heat Exchanger Units										
Number of Cores per Unit										
Core Width		mm								
Core height		mm								
Core Length		mm								
Parting Sheet Thickness		mm								
Outside Sheet Thickness		mm								
Number of Dummy Layers										
Number of Passages										
Passage Width (Effective)		mm								
Passage Length (Effective)		mm								
Fin Type										
Fin Height x Thickness		mm								
Number of Fins per Inch										
Surface Area (Effective)		m²								
Distributor										
Nozzles.			IN	OUT	IN	OUT	IN	OUT	IN	OUT
Rating										
Size		mm								
Number										
Design Pressure		kPag	911		850					
Test Pressure		°C								
Design Temperature	Max	°C	80		80					
	Min	°C	-17		-17					
Design Code										
Manufacturing Standards										
Weights	Operating									
	Full of water									

- DESIGN - MATERIALS - CONSTRUCTION -

		1	2	3	4
Stream Number		1	2	3	4
Stream Name		WASH WATER	COOLING WATER		
Dimensions					
Width	mm				
Depth	mm				
Height	mm				
Material - (Note 2)		TITANIUM	TITANIUM		
Structural Design Code					
Wind Load Design Code					
Seismic Zone					
Insulation Filling					

DESIGN DATA

	Temperature °C	Pressure kPaA	Enthalpy kJ/kg	Vapor Fraction Mol %	Vapor Fraction Vol %	Heat Duty kW
1	53.95	447.92		0.00	0.00	0
2	52.31	437.57		0.00	0.00	-2,559
3	50.68	427.23		0.00	0.00	-5,118
4	49.04	416.89		0.00	0.00	-7,677
5	47.41	406.55		0.00	0.00	-10,236
6	45.77	396.20		0.00	0.00	-12,795
7	44.14	385.86		0.00	0.00	-15,354
8	42.50	375.52		0.00	0.00	-17,913
9	40.87	365.18		0.00	0.00	-20,472
10	39.23	354.84		0.00	0.00	-23,031
11	37.60	344.49		0.00	0.00	-25,590

HEAT RELEASE CURVE - STREAM 1 (WASH WATER)

	Temperature °C	Pressure kPaA	Enthalpy kJ/kg	Vapor Fraction Mol %	Vapor Fraction Vol %	Heat Duty kW
1	28.60	300.00		0.00	0.00	0
2	29.68	293.11		0.00	0.00	2,559
3	30.76	286.21		0.00	0.00	5,118
4	31.84	279.32		0.00	0.00	7,677
5	32.91	272.42		0.00	0.00	10,236
6	33.99	265.53		0.00	0.00	12,795
7	35.07	258.63		0.00	0.00	15,354
8	36.15	251.74		0.00	0.00	17,913
9	37.23	244.84		0.00	0.00	20,472
10	38.31	237.95		0.00	0.00	23,031
11	39.39	231.05		0.00	0.00	25,590

HEAT RELEASE CURVE - STREAM 2 (COOLING WATER)

NOTES:

1. Vendor to advise margin to account for fouling in wash water service (minimum 10%).
2. Vendor to confirm material selection based on own product experience in wash water service.
3. 5% margin shall be added to the mass flowrate.
4. The wash water is used to scrub flue gas exhaust from an amine absorber. The water may contain up to 2 wt.% MEA (monoethanolamine) and 0.5 wt% carbon dioxide.

CLIENT	:	**U. S. Department of Energy, Office of Fossil Energy, National Energy Technology Laboratory**
PROJECT TITLE	:	**FEED Study for Carbon Capture Plant Retrofit**
JOB NUMBER	:	**26301**
M.R. NUMBER	:	
EQUIPMENT NUMBER	:	ME-108 A-H
EQUIPMENT TITLE	:	LEAN / RICH AMINE HEAT EXCHANGER
SERIAL NUMBER	:	
CRITICALITY RATING	:	

COMMENTS:

A. Vendor to add all missing data.

B. Maximum number of exchangers is 8 x 12.5%. Vendor to advise alternative configuration of 4 x 25% or 6 x 16.7% exchangers, where achievable.

C. Welded-type plate heat exchanger is preferred.

D. Turndown of 70% on flow and duty required with all exchangers in service.

Acknowledgment: This material is based upon work supported by the Department of Energy Award Number DE-FE0031848.

Disclaimer: This report was prepared as an account of work sponsored by an agency of the United States Government. Neither the United States Government nor any agency thereof, nor any of their employees, makes any warranty, express or implied, or assumes any legal liability or responsibility for the accuracy, completeness, or usefulness of any information, apparatus, product, or process disclosed, or represents that its use would not infringe privately owned rights. Reference herein to any specific commercial product, process, or service by trade name, trademark, manufacturer, or otherwise does not necessarily constitute or imply its endorsement, recommendation, or favoring by the United States Government or any agency thereof. The views and opinions of authors expressed herein do not necessarily state or reflect those of the United States Government or any agency thereof.

REV	DATE	DESCRIPTION	BY	CHKD	APPD		
0	03-Jul-20	ISSUED FOR INFORMATION	AAR	DT	MJC/ADB		

BECHTEL	**Heat Exchanger (Plate) Data Sheet - Lean / Rich Amine Exchanger**	JOB No	**26301**
		DATA SHEET No.	REV
		Bechtel: 26301-000-M5D-CN-00031 Owner: NOT USED	0
		SHEET	1 OF 4

Applicable To: ☐ Proposal ☐ Purchase ☐ As Built ☐ ASME ☐ API ☐ Other _____

Manufacturer _____ Model _____ Serial No. _____

GENERAL DATA

			1		2		3		4	
Stream Number			1		2		3		4	
Stream Name			RICH AMINE (Notes 4, 5)		LEAN AMINE (Notes 4, 5)					
Fluid Quantity			IN	OUT	IN	OUT	IN	OUT	IN	OUT
Vapor		kg/h	-	-	-	-				
Liquid		kg/h	2,261,077	2,261,077	2,065,116	2,065,116				
Steam		kg/h	-	-	-	-				
Water		kg/h	-	-	-	-				
Non-Condensable		kg/h	-	-	-	-				
Temperature		°C	52.20	120.70	130.10	57.53				
Vapor			-	-	-	-				
Density		kg/m³	-	-	-	-				
Viscosity		Pa.s	-	-	-	-				
Thermal Conductivity		W/(m-K)	-	-	-	-				
Specific Heat		kj/(kg-K)	-	-	-	-				
Molecular Weight			-	-	-	-				
Liquid			-	-	-	-				
Density		kg/m³	1,158.6	1,138.0	1,077.1	1,110.0				
Viscosity (Note 3)		Pa.s	0.00270	0.00069	0.00052	0.00202				
Thermal Conductivity		W/(m-K)	0.376	0.390	0.409	0.399				
Specific Heat		kj/(kg-K)	3.170	3.531	3.577	3.312				
Pressure		kPag	974		471					
Velocity		m/s								
Latent Heat		kj/kg								
Pressure Drop	Allow.	kPa	100		70					
Pressure Drop	Calc.	kPa								
Fouling Factor		m²-°C/W	(Note 1)		(Note 1)					
Number of Passes										
Heat Exchanged		kW	**142,738**		**142,738**					
MTD		°C								
Transfer Rate	Clean	kW/(m²-K)								
Transfer Rate	Service	kW/(m²-K)								

CONSTRUCTION

Number of Plate Heat Exchanger Units			**8**							
Number of Cores per Unit										
Core Width		mm								
Core height		mm								
Core Length		mm								
Parting Sheet Thickness		mm								
Outside Sheet Thickness		mm								
Number of Dummy Layers										
Number of Passages										
Passage Width (Effective)		mm								
Passage Length (Effective)		mm								
Fin Type										
Fin Height x Thickness		mm								
Number of Fins per Inch										
Surface Area (Effective)		m²								
Distributor										
Nozzles.			IN	OUT	IN	OUT	IN	OUT	IN	OUT
Rating										
Size		mm								
Number										
Design Pressure		kPag	2,076		1,769					
Test Pressure		°C								
Design Temperature	Max	°C	160		160					
	Min	°C	-17		-17					
Design Code										
Manufacturing Standards										
Weights	Operating									
	Full of water									

- DESIGN - MATERIALS - CONSTRUCTION -

Stream Number		1	2	3	4
Stream Name		RICH AMINE (Notes 4, 5)	LEAN AMINE (Notes 4, 5)		
Dimensions					
Width	mm				
Depth	mm				
Height	mm				
Material - (Note 2)		SS 316L	SS 316L		
Structural Design Code					
Wind Load Design Code					
Seismic Zone					
Insulation Filling					

DESIGN DATA

	Temperature °C	Pressure kPaA	Enthalpy kJ/kg	Vapor Fraction Mol %	Vapor Fraction Vol %	Heat Duty kW
1	52.20	1,073.9		0.00	0.00	0
2	59.35	1,063.6		0.00	0.00	14,274
3	66.44	1,053.3		0.00	0.00	28,548
4	73.48	1,042.9		0.00	0.00	42,821
5	80.45	1,032.6		0.00	0.00	57,095
6	87.36	1,022.2		0.00	0.00	71,369
7	94.19	1,011.9		0.00	0.00	85,643
8	100.95	1,001.5		0.00	0.00	99,916
9	107.62	991.2		0.00	0.00	114,190
10	114.21	980.9		0.00	0.00	128,464
11	120.70	970.5		0.00	0.00	142,738

HEAT RELEASE CURVE - STREAM 1 (Rich Amine)

	Temperature °C	Pressure kPaA	Enthalpy kJ/kg	Vapor Fraction Mol %	Vapor Fraction Vol %	Heat Duty kW
1	130.09	571.3		0.00	0.00	0
2	123.10	564.4		0.00	0.00	-14,274
3	116.05	557.5		0.00	0.00	-28,548
4	108.93	550.6		0.00	0.00	-42,821
5	101.74	543.7		0.00	0.00	-57,095
6	94.50	536.8		0.00	0.00	-71,369
7	87.21	529.9		0.00	0.00	-85,643
8	79.86	523.0		0.00	0.00	-99,916
9	72.46	516.1		0.00	0.00	-114,190
10	65.02	509.2		0.00	0.00	-128,464
11	57.53	502.3		0.00	0.00	-142,738

HEAT RELEASE CURVE - STREAM 2 (Lean Amine)

NOTES:

1. Vendor to advise margin to account for fouling in amine service (minimum 10%).
2. Vendor to confirm material selection based on own product experience in amine service.
3. Heat exchangers should be suitable for 150% stated viscosity (amine side only) without applying other design margins.
4. The fluid is nominal 35 wt.% MEA solvent.
5. 5% margin shall be added to the mass flowrate.

CLIENT	:	**U. S. Department of Energy, Office of Fossil Energy, National Energy Technology Laboratory**
PROJECT TITLE	:	**FEED Study for Carbon Capture Plant Retrofit**
JOB NUMBER	:	**26301**
M.R. NUMBER	:	
EQUIPMENT NUMBER	:	ME-102
EQUIPMENT TITLE	:	LEAN AMINE COOLER
SERIAL NUMBER	:	
CRITICALITY RATING	:	

COMMENTS:

A. Vendor to add all missing data.

B. Welded-type plate heat exchanger is preferred.

Acknowledgment: *This material is based upon work supported by the Department of Energy Award Number DE-FE0031848.*

Disclaimer: *This report was prepared as an account of work sponsored by an agency of the United States Government. Neither the United States Government nor any agency thereof, nor any of their employees, makes any warranty, express or implied, or assumes any legal liability or responsibility for the accuracy, completeness, or usefulness of any information, apparatus, product, or process disclosed, or represents that its use would not infringe privately owned rights. Reference herein to any specific commercial product, process, or service by trade name, trademark, manufacturer, or otherwise does not necessarily constitute or imply its endorsement, recommendation, or favoring by the United States Government or any agency thereof. The views and opinions of authors expressed herein do not necessarily state or reflect those of the United States Government or any agency thereof.*

REV	DATE	DESCRIPTION	BY	CHKD	APPD		
0	08-Aug-20	ISSUED FOR INFORMATION	MJC	DT	MJC/ADB		

BECHTEL

Heat Exchanger (Plate) Data Sheet - Lean Amine Cooler

JOB No	**26301**	
DATA SHEET No.		REV
Bechtel: 26301-000-M5D-CN-00032 Owner: NOT USED		0
SHEET	1 OF 4	

Applicable To: ☐ Proposal ☐ Purchase ☐ As Built ☐ ASME ☐ API ☐ Other _____

Manufacturer _____ Model _____ Serial No. _____

GENERAL DATA

Stream Number			1		2		3		4	
Stream Name			LEAN AMINE (Notes 4, 5)		COOLING WATER					
Fluid Quantity			IN	OUT	IN	OUT	IN	OUT	IN	OUT
Vapor		kg/h	-	-	-	-				
Liquid		kg/h	2,065,116	2,065,116	-	-				
Steam		kg/h	-	-	-	-				
Water		kg/h	-	-	1,144,167	1,144,167				
Non-Condensable		kg/h	-	-	-	-				
Temperature		°C	57.53	50.00	28.60	39.39				
Vapor			-	-	-	-				
Density		kg/m³	-	-	-	-				
Viscosity		Pa.s	-	-	-	-				
Thermal Conductivity		W/(m-K)	-	-	-	-				
Specific Heat		kj/(kg-K)	-	-	-	-				
Molecular Weight			-	-	-	-				
Liquid			-	-	-	-				
Density		kg/m³	1,110.0	1,112.1	995.5	991.8				
Viscosity (Note 3)		Pa.s	0.00202	0.00245	0.00084	0.00068				
Thermal Conductivity		W/(m-K)	0.399	0.396	0.611	0.625				
Specific Heat		kj/(kg-K)	3.312	3.295	4.181	4.177				
Pressure		kPag	402	302	200	130				
Velocity		m/s								
Latent Heat		kj/kg								
Pressure Drop	Allow.	kPa	100		70					
Pressure Drop	Calc.	kPa								
Fouling Factor		m²-°C/W	(Note 1)		(Note 1)					
Number of Passes										
Heat Exchanged		kW	**14,322**		**14,322**					
MTD		°C								
Transfer Rate	Clean	kW/(m²-K)								
Transfer Rate	Service	kW/(m²-K)								

CONSTRUCTION

Number of Plate Heat Exchanger Units		**1**							
Number of Cores per Unit									
Core Width	mm								
Core height	mm								
Core Length	mm								
Parting Sheet Thickness	mm								
Outside Sheet Thickness	mm								
Number of Dummy Layers									
Number of Passages									
Passage Width (Effective)	mm								
Passage Length (Effective)	mm								
Fin Type									
Fin Height x Thickness	mm								
Number of Fins per Inch									
Surface Area (Effective)	m²								
Distributor									
Nozzles.		IN	OUT	IN	OUT	IN	OUT	IN	OUT
Rating									
Size	mm								
Number									
Design Pressure	kPag	1769 / FV		850 / FV					
Test Pressure	°C								
Design Temperature	Max °C	160		80					
	Min °C	-17		-17					
Design Code									
Manufacturing Standards									
Weights	Operating								
	Full of water								

- DESIGN - MATERIALS - CONSTRUCTION -

		1	2	3	4
Stream Number		1	2	3	4
Stream Name		LEAN AMINE	COOLING WATER		
Dimensions					
Width	mm				
Depth	mm				
Height	mm				
Material - (Note 2, 6)		TITANIUM	TITANIUM		
Structural Design Code					
Wind Load Design Code					
Seismic Zone					
Insulation Filling					

DESIGN DATA

	Temperature °C	Pressure kPaA	Enthalpy kJ/kg	Vapor Fraction Mol %	Vapor Fraction Vol %	Heat Duty kW
1	57.53	502.3		0.00	0.00	0
2	56.78	492.0		0.00	0.00	-1,432
3	56.03	481.6		0.00	0.00	-2,865
4	55.28	471.3		0.00	0.00	-4,297
5	54.52	461.0		0.00	0.00	-5,729
6	53.77	450.6		0.00	0.00	-7,161
7	53.02	440.3		0.00	0.00	-8,594
8	52.26	429.9		0.00	0.00	-10,026
9	51.51	419.6		0.00	0.00	-11,458
10	50.76	409.3		0.00	0.00	-12,890
11	50.00	402.3		0.00	0.00	-14,323

HEAT RELEASE CURVE - STREAM 1 (Lean Amine)

	Temperature °C	Pressure kPaA	Enthalpy kJ/kg	Vapor Fraction Mol %	Vapor Fraction Vol %	Heat Duty kW
1	28.60	300.0		0.00	0.00	0
2	29.68	293.1		0.00	0.00	1,432
3	30.76	286.2		0.00	0.00	2,865
4	31.84	279.3		0.00	0.00	4,297
5	32.91	272.4		0.00	0.00	5,729
6	33.99	265.5		0.00	0.00	7,161
7	35.07	258.6		0.00	0.00	8,594
8	36.15	251.7		0.00	0.00	10,026
9	37.23	244.8		0.00	0.00	11,458
10	38.31	237.9		0.00	0.00	12,890
11	39.39	230.0		0.00	0.00	14,323

HEAT RELEASE CURVE - STREAM 2 (Cooling Water)

NOTES:

1. Vendor to advise margin to account for fouling in amine and cooling water service (minimum 10%).
2. Vendor to confirm material selection based on own product experience in amine and cooling water service.
3. Heat exchangers should be suitable for 150% stated viscosity (amine side only) without applying other design margins.
4. The fluid is nominal 35 wt.% MEA solvent. CO2 content is 0.254 mol CO2/mol MEA.
5. 5% margin shall be added to the mass flowrate and duty.
6. Cooling Water quality is listed below;

Calcium	672	mg/l as Ca
Magnesium	248	mg/l as Mg
Total Hardness	2712	mg/l as $CaCO_3$
Sodium	1512	mg/l as Na
Potassium	48	mg/l as K
Iron, dissolved	0.16	mg/l as Fe
Iron, total	0.16	mg/l as Fe
Manganese, dissolved	0.1	mg/l as Mn
Manganese, total	0.1	mg/l as Mn
Barium	1.04	mg/l as Ba
Strontium	8.2	mg/l as Sr
Sulfates	2421	mg/l as SO_4
Chlorides	2216	mg/l as Cl
Fluorides	2.2	mg/l as F
Nitrates	< 5	mg/l as NO_3
Nitrites	< 0.1	mg/l as NO_2
Phosphorus	0.5	mg/l as P
P Alkalinity	< 5	mg/l as $CaCO_3$
M Alkalinity	172	mg/l as $CaCO_3$
Silica, dissolved	25	mg/l as SiO_2
Silica, total	25	mg/l as SiO_2
pH	7.5 to 8.0	(standard units)
Conductivity	13040	µS/cm at 25 °C
Total Dissolved Solids (TDS)	8350	mg/l
Total Suspended Solids (TSS)	50	mg/l

CLIENT	:	**U. S. Department of Energy, Office of Fossil Energy, National Energy Technology Laboratory**
PROJECT TITLE	:	**FEED Study for Carbon Capture Plant Retrofit**
JOB NUMBER	:	**26301**
M.R. NUMBER	:	
EQUIPMENT NUMBER	:	ME-103A/B
EQUIPMENT TITLE	:	SEMI-LEAN / RICH AMINE HEAT EXCHANGER
SERIAL NUMBER	:	
CRITICALITY RATING	:	

COMMENTS:

A. Vendor to add all missing data.

B. Welded-type plate heat exchanger is preferred.

C. Maximum number of exchangers is 2 x 50%. Vendor to advise alternative configuration of 1 x 100% exchanger, where achievable.

Acknowledgment: *This material is based upon work supported by the Department of Energy Award Number DE-FE0031848.*

Disclaimer: *This report was prepared as an account of work sponsored by an agency of the United States Government. Neither the United States Government nor any agency thereof, nor any of their employees, makes any warranty, express or implied, or assumes any legal liability or responsibility for the accuracy, completeness, or usefulness of any information, apparatus, product, or process disclosed, or represents that its use would not infringe privately owned rights. Reference herein to any specific commercial product, process, or service by trade name, trademark, manufacturer, or otherwise does not necessarily constitute or imply its endorsement, recommendation, or favoring by the United States Government or any agency thereof. The views and opinions of authors expressed herein do not necessarily state or reflect those of the United States Government or any agency thereof.*

REV	DATE	DESCRIPTION	BY	CHKD	APPD		
0	08-Aug-20	ISSUED FOR INFORMATION	MJC	DT	MJC/ADB		

BECHTEL

Heat Exchanger (Plate) Data Sheet - Semi-Lean / Rich Amine Heat Exchanger

JOB No	**26301**	
DATA SHEET No.		REV
Bechtel: 26301-000-M5D-CN-00041 Owner: NOT USED		0
SHEET	1 OF 4	

Applicable To: ☐ Proposal ☐ Purchase ☐ As Built ☐ ASME ☐ API ☐ Other _____

Manufacturer _____ Model _____ Serial No. _____

GENERAL DATA

Stream Number			1		2		3		4	
Stream Name			RICH AMINE (Notes 4, 5)		SEMI-LEAN AMINE (Notes 4, 5)					
Fluid Quantity			IN	OUT	IN	OUT	IN	OUT	IN	OUT
Vapor		kg/h	-	-	-	-				
Liquid		kg/h	565,269	565,269	556,128	556,128				
Steam		kg/h	-	-	-	-				
Water		kg/h	-	-	-	-				
Non-Condensable		kg/h	-	-	-	-				
Temperature		°C	52.20	109.50	115.08	57.40				
Vapor			-	-	-	-				
Density		kg/m³	-	-	-	-				
Viscosity		Pa.s	-	-	-	-				
Thermal Conductivity		W/(m-K)	-	-	-	-				
Specific Heat		kj/(kg-K)	-	-	-	-				
Molecular Weight			-	-	-	-				
Liquid			-	-	-	-				
Density		kg/m³	1,158.6	1,142.5	1,132.3	1,150.5				
Viscosity (Note 3)		Pa.s	0.00270	0.00082	0.00074	0.00232				
Thermal Conductivity		W/(m-K)	0.376	0.389	0.393	0.381				
Specific Heat		kj/(kg-K)	3.170	3.441	3.472	3.196				
Pressure		kPag	974	874	502	432				
Velocity		m/s								
Latent Heat		kj/kg								
Pressure Drop	Allow.	kPa	100		70					
Pressure Drop	Calc.	kPa								
Fouling Factor		m²-°C/W	(Note 1)		(Note 1)					
Number of Passes										
Heat Exchanged		kW	**29,556**		**29,556**					
MTD		°C								
Transfer Rate	Clean	kW/(m²-K)								
Transfer Rate	Service	kW/(m²-K)								

CONSTRUCTION

Number of Plate Heat Exchanger Units			**2**							
Number of Cores per Unit										
Core Width		mm								
Core height		mm								
Core Length		mm								
Parting Sheet Thickness		mm								
Outside Sheet Thickness		mm								
Number of Dummy Layers										
Number of Passages										
Passage Width (Effective)		mm								
Passage Length (Effective)		mm								
Fin Type										
Fin Height x Thickness		mm								
Number of Fins per Inch										
Surface Area (Effective)		m²								
Distributor										
Nozzles.			IN	OUT	IN	OUT	IN	OUT	IN	OUT
Rating										
Size		mm								
Number										
Design Pressure		kPag	2076 / FV		1079 / FV					
Test Pressure		°C								
Design Temperature	Max	°C	140		145					
	Min	°C	-17		-17					
Design Code										
Manufacturing Standards										
Weights	Operating									
	Full of water									

- DESIGN - MATERIALS - CONSTRUCTION -

Stream Number		1	2	3	4
Stream Name		RICH AMINE (Notes 4, 5)	SEMI-LEAN AMINE (Notes 4, 5)		
Dimensions					
Width	mm				
Depth	mm				
Height	mm				
Material - (Note 2)		SS 316L	SS 316L		
Structural Design Code					
Wind Load Design Code					
Seismic Zone					
Insulation Filling					

DESIGN DATA

	Temperature °C	Pressure kPaA	Enthalpy kJ/kg	Vapor Fraction Mol %	Vapor Fraction Vol %	Heat Duty kW
1	52.20	1,073.9		0.00	0.00	0
2	58.12	1,063.6		0.00	0.00	2,956
3	64.01	1,053.3		0.00	0.00	5,911
4	69.86	1,042.9		0.00	0.00	8,867
5	75.67	1,032.6		0.00	0.00	11,823
6	81.43	1,022.2		0.00	0.00	14,778
7	87.15	1,011.9		0.00	0.00	17,734
8	92.82	1,001.5		0.00	0.00	20,690
9	98.44	991.2		0.00	0.00	23,645
10	104.00	980.9		0.00	0.00	26,601
11	109.50	970.5		0.00	0.00	29,556

HEAT RELEASE CURVE - STREAM 1 (Rich Amine)

	Temperature °C	Pressure kPaA	Enthalpy kJ/kg	Vapor Fraction Mol %	Vapor Fraction Vol %	Heat Duty kW
1	115.08	601.7		0.00	0.00	0
2	109.54	594.8		0.00	0.00	-2,956
3	103.94	587.9		0.00	0.00	-5,911
4	98.29	581.0		0.00	0.00	-8,867
5	92.58	574.1		0.00	0.00	-11,823
6	86.83	567.3		0.00	0.00	-14,778
7	81.03	560.4		0.00	0.00	-17,734
8	75.18	553.5		0.00	0.00	-20,690
9	69.30	546.6		0.00	0.00	-23,645
10	63.37	539.7		0.00	0.00	-26,601
11	57.40	531.8		0.00	0.00	-29,556

HEAT RELEASE CURVE - STREAM 2 (Semi-Lean Amine)

NOTES:

1. Vendor to advise margin to account for fouling in amine service (minimum 10%).
2. Vendor to confirm material selection based on own product experience in amine service.
3. Heat exchanger should be suitable for 150% stated viscosity (both sides) without applying other design margins.
4. The fluid is 35 wt.% MEA solvent. Rich Amine CO_2 content is 0.475 mol CO_2/mol MEA. Semi-Lean Amine CO_2 content is 0.434 mol CO_2/mol MEA.
5. 5% margin shall be added to the mass flowrate and duty.

CLIENT	:	**U. S. Department of Energy, Office of Fossil Energy, National Energy Technology Laboratory**
PROJECT TITLE	:	**FEED Study for Carbon Capture Plant Retrofit**
JOB NUMBER	:	**26301**
M.R. NUMBER	:	
EQUIPMENT NUMBER	:	ME-107
EQUIPMENT TITLE	:	FLASH FEED HEAT EXCHANGER
SERIAL NUMBER	:	
CRITICALITY RATING	:	

COMMENTS:

A. Vendor to add all missing data.

B. Welded-type plate heat exchanger is preferred.

Acknowledgment: *This material is based upon work supported by the Department of Energy Award Number DE-FE0031848.*

Disclaimer: *This report was prepared as an account of work sponsored by an agency of the United States Government. Neither the United States Government nor any agency thereof, nor any of their employees, makes any warranty, express or implied, or assumes any legal liability or responsibility for the accuracy, completeness, or usefulness of any information, apparatus, product, or process disclosed, or represents that its use would not infringe privately owned rights. Reference herein to any specific commercial product, process, or service by trade name, trademark, manufacturer, or otherwise does not necessarily constitute or imply its endorsement, recommendation, or favoring by the United States Government or any agency thereof. The views and opinions of authors expressed herein do not necessarily state or reflect those of the United States Government or any agency thereof.*

REV	DATE	DESCRIPTION	BY	CHKD	APPD		
0	08-Aug-20	ISSUED FOR INFORMATION	MJC	DT	MJC/ADB		

BECHTEL		**Heat Exchanger (Plate) Data Sheet - Flash Feed Heat Exchanger**	JOB No	**26301**
			DATA SHEET No.	REV
			Bechtel: 26301-000-M5D-CN-00042 Owner: NOT USED	0
			SHEET 1 OF 4	

Applicable To: ☐ Proposal ☐ Purchase ☐ As Built ☐ ASME ☐ API ☐ Other _____

Manufacturer _____ Model _____ Serial No. _____

GENERAL DATA

Stream Number			1		2		3		4	
Stream Name			RICH AMINE (Notes 4, 5)		LEAN AMINE (Notes 4, 5)					
Fluid Quantity			IN	OUT	IN	OUT	IN	OUT	IN	OUT
Vapor		kg/h	-	-	-	-				
Liquid		kg/h	565,269	565,269	413,023	413,023				
Steam		kg/h	-	-	-	-				
Water		kg/h	-	-	-	-				
Non-Condensable		kg/h	-	-	-	-				
Temperature		°C	109.50	113.29	131.08	126.11				
Vapor			-	-	-	-				
Density		kg/m³	-	-	-	-				
Viscosity		Pa.s	-	-	-	-				
Thermal Conductivity		W/(m-K)	-	-	-	-				
Specific Heat		kj/(kg-K)	-	-	-	-				
Molecular Weight			-	-	-	-				
Liquid			-	-	-	-				
Density		kg/m³	1,142.5	1,141.1	1,076.6	1,079.4				
Viscosity (Note 3)		Pa.s	0.00082	0.00077	0.00052	0.00055				
Thermal Conductivity		W/(m-K)	0.389	0.390	0.409	0.409				
Specific Heat		kj/(kg-K)	3.441	3.470	3.582	3.557				
Pressure		kPag	871	767	540	471				
Velocity		m/s								
Latent Heat		kj/kg								
Pressure Drop	Allow.	kPa	100		70					
Pressure Drop	Calc.	kPa								
Fouling Factor		m²-°C/W	(Note 1)		(Note 1)					
Number of Passes										
Heat Exchanged		kW	**2,041**		**2,041**					
MTD		°C								
Transfer Rate	Clean	kW/(m²-K)								
Transfer Rate	Service	kW/(m²-K)								

CONSTRUCTION

Number of Plate Heat Exchanger Units			**1**							
Number of Cores per Unit										
Core Width		mm								
Core height		mm								
Core Length		mm								
Parting Sheet Thickness		mm								
Outside Sheet Thickness		mm								
Number of Dummy Layers										
Number of Passages										
Passage Width (Effective)		mm								
Passage Length (Effective)		mm								
Fin Type										
Fin Height x Thickness		mm								
Number of Fins per Inch										
Surface Area (Effective)		m²								
Distributor										
Nozzles.			IN	OUT	IN	OUT	IN	OUT	IN	OUT
Rating										
Size		mm								
Number										
Design Pressure		kPag	2076 / FV		1769 / FV					
Test Pressure		°C								
Design Temperature	Max	°C	142		160					
	Min	°C	-17		-17					
Design Code										
Manufacturing Standards										
Weights	Operating									
	Full of water									

- DESIGN - MATERIALS - CONSTRUCTION -

Stream Number		1	2	3	4
Stream Name		RICH AMINE	LEAN AMINE		
Dimensions					
Width	mm				
Depth	mm				
Height	mm				
Material - (Note 2)		SS 316L	SS 316L		
Structural Design Code					
Wind Load Design Code					
Seismic Zone					
Insulation Filling					

DESIGN DATA

	Temperature °C	Pressure kPaA	Enthalpy kJ/kg	Vapor Fraction Mol %	Vapor Fraction Vol %	Heat Duty kW
1	109.50	970.5		0.00	0.00	0
2	109.88	960.2		0.00	0.00	204
3	110.26	949.8		0.00	0.00	408
4	110.64	939.5		0.00	0.00	612
5	111.02	929.2		0.00	0.00	816
6	111.40	918.8		0.00	0.00	1,020
7	111.77	908.5		0.00	0.00	1,224
8	112.15	898.1		0.00	0.00	1,428
9	112.53	887.8		0.00	0.00	1,632
10	112.91	877.4		0.00	0.00	1,837
11	113.29	867.1		0.00	0.00	2,041

HEAT RELEASE CURVE - STREAM 1 (Rich Amine)

	Temperature °C	Pressure kPaA	Enthalpy kJ/kg	Vapor Fraction Mol %	Vapor Fraction Vol %	Heat Duty kW
1	131.08	640.2		0.00	0.00	0
2	130.58	633.3		0.00	0.00	-204
3	130.09	626.4		0.00	0.00	-408
4	129.59	619.5		0.00	0.00	-612
5	129.10	612.6		0.00	0.00	-816
6	128.60	605.8		0.00	0.00	-1,020
7	128.10	598.9		0.00	0.00	-1,224
8	127.61	592.0		0.00	0.00	-1,428
9	127.11	585.1		0.00	0.00	-1,632
10	126.61	578.2		0.00	0.00	-1,837
11	126.11	571.3		0.00	0.00	-2,041

HEAT RELEASE CURVE - STREAM 2 (Lean Amine)

NOTES:

1. Vendor to advise margin to account for fouling in amine service (minimum 10%).
2. Vendor to confirm material selection based on own product experience in amine service.
3. Heat exchanger should be suitable for 150% stated viscosity (both sides) without applying other design margins.
4. The fluid is 35 wt.% MEA solvent. Rich Amine CO_2 content is 0.475 mol CO_2/mol MEA. Lean Amine CO_2 content is 0.254 mol CO_2/mol MEA.
5. 5% margin shall be added to the mass flowrate and duty.

CLIENT	:	**U. S. Department of Energy, Office of Fossil Energy, National Energy Technology Laboratory**
PROJECT TITLE	:	**FEED Study for Carbon Capture Plant Retrofit**
JOB NUMBER	:	**26301**
M.R. NUMBER	:	
EQUIPMENT NUMBER	:	ME-109
EQUIPMENT TITLE	:	FLASH FEED HEATER
SERIAL NUMBER	:	
CRITICALITY RATING	:	

COMMENTS:

A. Vendor to add all missing data.

B. Welded-type plate heat exchanger is preferred.

Acknowledgment: *This material is based upon work supported by the Department of Energy Award Number DE-FE0031848.*

Disclaimer: *This report was prepared as an account of work sponsored by an agency of the United States Government. Neither the United States Government nor any agency thereof, nor any of their employees, makes any warranty, express or implied, or assumes any legal liability or responsibility for the accuracy, completeness, or usefulness of any information, apparatus, product, or process disclosed, or represents that its use would not infringe privately owned rights. Reference herein to any specific commercial product, process, or service by trade name, trademark, manufacturer, or otherwise does not necessarily constitute or imply its endorsement, recommendation, or favoring by the United States Government or any agency thereof. The views and opinions of authors expressed herein do not necessarily state or reflect those of the United States Government or any agency thereof.*

REV	DATE	DESCRIPTION	BY	CHKD	APPD		
0	08-Aug-20	ISSUED FOR INFORMATION	MJC	DT	MJC/ADB		

BECHTEL

Heat Exchanger (Plate) Data Sheet - Flash Feed Heater

JOB No	**26301**	
DATA SHEET No.		REV
Bechtel: 26301-000-M5D-CN-00043 Owner: NOT USED		0
SHEET	1 OF 4	

Applicable To: ☐ Proposal ☐ Purchase ☐ As Built ☐ ASME ☐ API ☐ Other _____

Manufacturer _____ Model _____ Serial No. _____

GENERAL DATA

Stream Number			1		2		3		4	
Stream Name			RICH AMINE (Notes 4, 5)		ILP STEAM					
Fluid Quantity			IN	OUT	IN	OUT	IN	OUT	IN	OUT
Vapor		kg/h	-	-	-	-				
Liquid		kg/h	565,269	565,269	-	-				
Steam		kg/h	-	-	8,503	-				
Water		kg/h	-	-	-	8,503				
Non-Condensable		kg/h	-	-	-	-				
Temperature		°C	113.29	122.80	125.83	124.43				
Vapor			-	-	-	-				
Density		kg/m³	-	-	1.3	-				
Viscosity		Pa.s	-	-	0.00001	-				
Thermal Conductivity		W/(m-K)	-	-	0.030	-				
Specific Heat		kj/(kg-K)	-	-	1.946	-				
Molecular Weight			-	-	-	-				
Liquid			-	-	-	-				
Density		kg/m³	1,141.1	1,137.1	-	940.0				
Viscosity (Note 3)		Pa.s	0.00077	0.00067	-	0.00022				
Thermal Conductivity		W/(m-K)	0.390	0.390	-	0.684				
Specific Heat		kj/(kg-K)	3.470	3.549	-	4.248				
Pressure		kPag	767	667	138	128				
Velocity		m/s								
Latent Heat		kj/kg								
Pressure Drop	Allow.	kPa	100		10					
Pressure Drop	Calc.	kPa								
Fouling Factor		m²-°C/W	(Note 1)		(Note 1)					
Number of Passes										
Heat Exchanged		kW	**5,228**		**-5,228**					
MTD		°C								
Transfer Rate	Clean	kW/(m²-K)								
Transfer Rate	Service	kW/(m²-K)								

CONSTRUCTION

Number of Plate Heat Exchanger Units			**1**							
Number of Cores per Unit										
Core Width		mm								
Core height		mm								
Core Length		mm								
Parting Sheet Thickness		mm								
Outside Sheet Thickness		mm								
Number of Dummy Layers										
Number of Passages										
Passage Width (Effective)		mm								
Passage Length (Effective)		mm								
Fin Type										
Fin Height x Thickness		mm								
Number of Fins per Inch										
Surface Area (Effective)		m²								
Distributor										
Nozzles.			IN	OUT	IN	OUT	IN	OUT	IN	OUT
Rating										
Size		mm								
Number										
Design Pressure		kPag	2076 / FV		1000 / FV					
Test Pressure		°C								
Design Temperature	Max	°C	155		177					
	Min	°C	-17		-17					
Design Code										
Manufacturing Standards										
Weights	Operating									
	Full of water									

- DESIGN - MATERIALS - CONSTRUCTION -

Stream Number		1	2	3	4
Stream Name		RICH AMINE	ILP STEAM		
Dimensions					
Width	mm				
Depth	mm				
Height	mm				
Material - (Note 2)		SS 316L	SS 316L		
Structural Design Code					
Wind Load Design Code					
Seismic Zone					
Insulation Filling					

DESIGN DATA

	Temperature °C	Pressure kPaA	Enthalpy kJ/kg	Vapor Fraction Mol %	Vapor Fraction Vol %	Heat Duty kW
1	113.29	867.1		0.00	0.00	0
2	114.25	856.8		0.00	0.00	523
3	115.21	846.4		0.00	0.00	1,046
4	116.16	836.1		0.00	0.00	1,568
5	117.12	825.7		0.00	0.00	2,091
6	118.07	815.4		0.00	0.00	2,614
7	119.02	805.0		0.00	0.00	3,137
8	119.97	794.7		0.00	0.00	3,660
9	120.91	784.4		0.00	0.00	4,182
10	121.86	774.0		0.00	0.00	4,705
11	122.80	763.7		0.00	0.00	5,228

HEAT RELEASE CURVE - STREAM 1 (Rich Amine)

NOTES:

1. Vendor to advise margin to account for fouling in amine and steam service (minimum 10%).
2. Vendor to confirm material selection based on own product experience in amine and steam service.
3. Heat exchanger should be suitable for 150% stated viscosity (amine side only) without applying other design margins.
4. The fluid is 35 wt.% MEA solvent. Rich Amine CO_2 content is 0.475 mol CO_2/mol MEA.
5. 5% margin shall be added to the mass flowrate and duty.

CLIENT	:	**U. S. Department of Energy, Office of Fossil Energy, National Energy Technology Laboratory**
PROJECT TITLE	:	**FEED Study for Carbon Capture Plant Retrofit**
JOB NUMBER	:	**26301**
M.R. NUMBER	:	
EQUIPMENT NUMBER	:	T-103
EQUIPMENT TITLE	:	Stripper
SERIAL NUMBER	:	
CRITICALITY RATING	:	

COMMENTS:

1. One vessel required. One Stripper receives rich amine from 2 Absorbers.
2. Refer to 26301-000-M5D-CN-00052 for column internal details.
3. Internals vendor to provide all internals including distributors.

Acknowledgment: This material is based upon work supported by the Department of Energy Award Number DE-FE0031848.

Disclaimer: This report was prepared as an account of work sponsored by an agency of the United States Government. Neither the United States Government nor any agency thereof, nor any of their employees, makes any warranty, express or implied, or assumes any legal liability or responsibility for the accuracy, completeness, or usefulness of any information, apparatus, product, or process disclosed, or represents that its use would not infringe privately owned rights. Reference herein to any specific commercial product, process, or service by trade name, trademark, manufacturer, or otherwise does not necessarily constitute or imply its endorsement, recommendation, or favoring by the United States Government or any agency thereof. The views and opinions of authors expressed herein do not necessarily state or reflect those of the United States Government or any agency thereof.

REV	DATE	DESCRIPTION	BY	CHKD	APPD		
0	26-Jun-20	ISSUED FOR INFORMATION	AAR	DT	MJC/ADB		

BECHTEL

Vessel Data Sheet - Stripper

JOB No	**26301**	
DATA SHEET No.		REV
Bechtel: 26301-000-M5D-CN-00051 Owner: NOT USED		0
SHEET	1 OF 2	

REVISION

CLIENT:	U. S. Department of Energy, Office of Fossil Energy, National Energy Technology Laboratory	EQUIPMENT No : T-103
PROJECT :	FEED Study for Carbon Capture Plant Retrofit	UNIT :

Rev

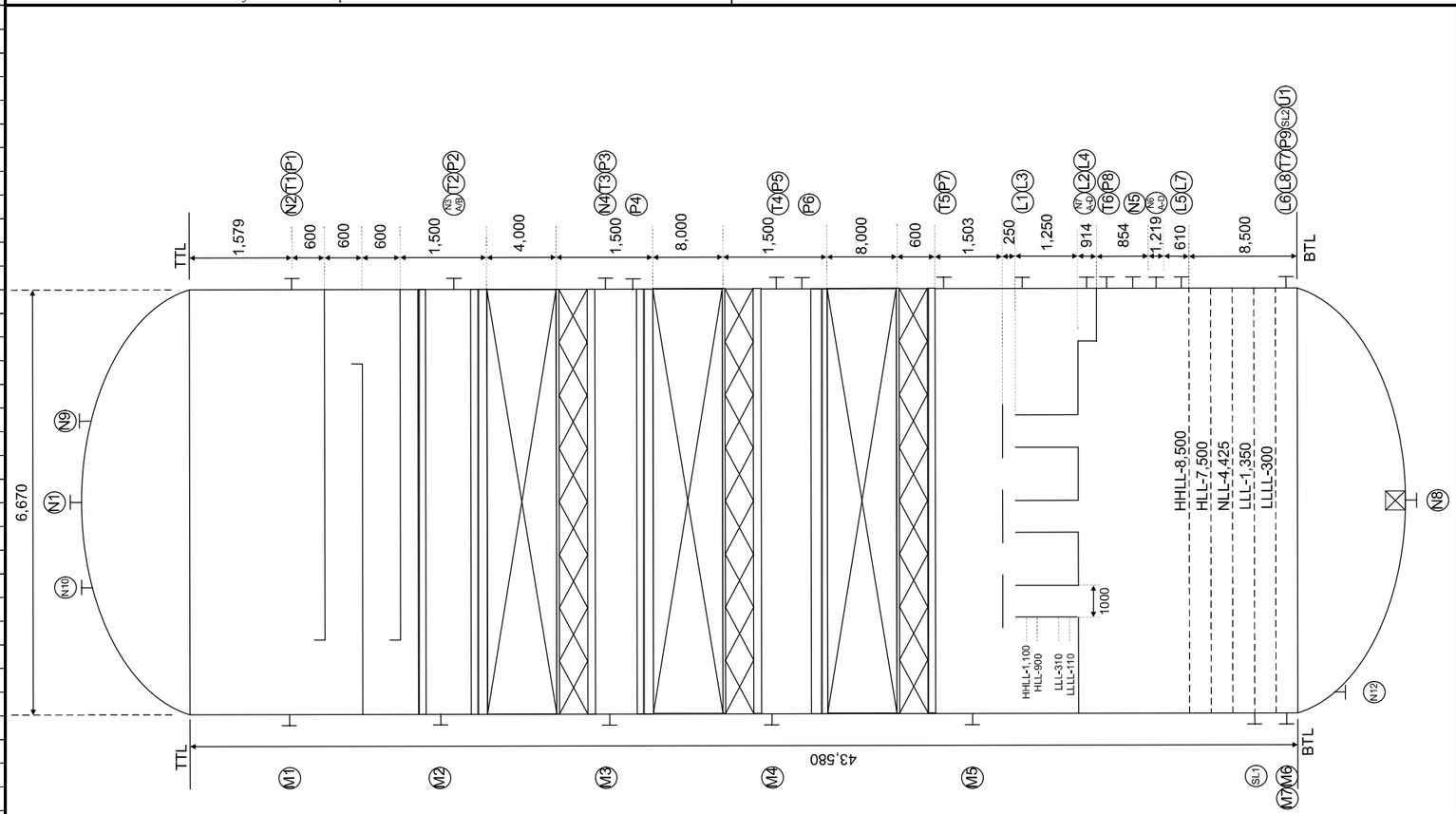

PROCESS NOZZLE DATA

REF	SIZE mm (NS)	RATING	DIMENSION Y	DIMENSION Z	PLAN ORIENT	SERVICE	REMARKS
N1	1000	150 #				Vapor Outlet	
N2	50	150 #				Reflux	
N3 A/B	600	150 #				Rich Amine	
N4	250	150 #				Flash Gas	
N5	150	150 #				Vapor from Reclaimer	
N6 A-D	1200	150 #				Reboiler Return	
N7 A-D	600	150 #				Reboiler Inlet Stream	
N8	900	150 #				Lean Amine to MP-105	
N9	150	150 #				PSV Inlet	
N10	100	150 #				Vent	
N12	100	150 #				Drain	

INSTRUMENT / MECHANICAL NOZZLE DATA

REF	SIZE mm (NS)	RATING	DIMENSION Y	DIMENSION Z	PLAN ORIENT	SERVICE	REMARKS
M1-M7	762	150 #				Manway	
T1-T7	50	150 #				Temperature	
P1-P9	50	150 #				Pressure	
SL1/SL2	50	150 #				Liquid Sampling	
L1-L8	50	150 #				Level	
U1	50	150 #				Utility Connection	

PROCESS OPERATING DATA

REF	FLUID	FLOW	DENSITY	TEMPERATURE °C NORM	TEMPERATURE °C MAX	TEMPERATURE °C MIN	PRESSURE kPa g NORM	PRESSURE kPa g MAX	PRESSURE kPa g MIN
(Note 4)		kg/hr	kg/m³						
N1	CO_2 Vapor	213,217	2.02	109.3			126.5		
N2	Amine	8,115	988.5	48.8			454.0		
N3 A/B	Amine	1,130,539	110.3	120.7			130.0		
N4	Flash Gas	9,141	2.30	115.1			147.0		
N5	Reclaimer Vapor	2,846	2.17	150.0			162.0		
N6 A-D	Amine + Flash Gas	567,261	17.2	131.0			161.0		
N7 A-D	Amine	567,261	1075.6	128.4			161.0		
N8	Amine	2,065,116	1076.6	131.0			161.0		

M/R NUMBER	
CODE	
SPECIFICATION	

DESIGN DATA

	PRESS	TEMP
	kPag	°C
MAX EXPECT. DESIGN PRESS. & CORRES. TEMP	345	160
MAX EXPECT. DESIGN TEMP. & CORRES. PRESS		
EXTERNAL DESIGN COND. (MAX/MIN TEMP)	FV	60
SYSTEM PSV SET AT	345	
CORROSION ALLOWANCE mm		
INTERNAL CLADDING mm		
RADIOGRAPHY		
DESIGN WIND SPEED m/s		
EARTHQUAKE DESIGN		
POST WELD HEAT TREATMENT REQ'D FOR		
HYDRO' TEST PRESSURE TO COMPLY WITH		
MOMENT ON BASE		
GOVERNED BY		

VESSEL WT	SHIPPING	OPERATING	TEST

MATERIALS

SHELL & HEADS	SS304L
INTERNAL CLADDING	NIL
REINFORCEMENT RINGS	
PLATE NECKS	
PIPE	
FORGINGS	
SUPPORTS	
DEMISTER PAD	
INTERNALS	
INTERNAL BOLTS	
INTERNAL NUTS	
EXTERNAL FLANGE BOLTS	
EXTERNAL FLANGE NUTS	
GASKETS	
EXTERNAL PREPARATION	
SHOP PAINT	
INTERNAL PREPARATION	
INTERNALS	
INSULATION	
FIREPROOFING	

REFERENCE DRAWINGS

SUPPORT SKIRT	
MANWAY DAVIT / HINGE	
MISCELLANEOUS SUPPORT CLIPS	
INSULATION SUPPORTS	
ANCHOR BOLTS, LUGGS & BASE PLATE	
PRESSURE VESSEL TOLERANCES	
DETAILS OF CLAD NOZZLES	
NOZZLES AND MANWAYS	
MISCELLANEOUS INTERNALS	
NAME PLATE	

MISCELLANEOUS CLIPS AS BELOW & AS PER DRAWINGS

OTHER DETAILS :

NOTES

1. All dimension in mm except where stated otherwise.
2. Residence time of 5 mins for lean amine in column bottom (LLL - HLL).
3. Liquid from the bottom of the packing is collected in a draw-off tray and routed to the reboiler.
4. Flowrates for N3 A/B, N6 A-D and N7 A-D are reported per each nozzle.

BECHTEL

VESSEL DATA SHEET - STRIPPER

JOB No	26301		
DRAWING No			REV
Bechtel: 26301-000-M5D-CN-00051 Owner: NOT USED			0
SHEET No.	2	OF	2

CLIENT	:	**U. S. Department of Energy, Office of Fossil Energy, National Energy Technology Laboratory**
PROJECT TITLE	:	**FEED Study for Carbon Capture Plant Retrofit**
JOB NUMBER	:	**26301**
M.R. NUMBER	:	
EQUIPMENT NUMBER	:	T-103
EQUIPMENT TITLE	:	STRIPPER - INTERNALS
SERIAL NUMBER	:	
CRITICALITY RATING	:	

COMMENTS:

1. Tray and packing is for the new Amine Stripper
2. For datasheet of vessel refer to 26301-000-M5D-CN-00051
3. Random or Structured Packing are acceptable for both trayed and packed sectio
4. Single stripper processes load from two absorbers.
5. Vendor to provide all internals including distributors.
6. Vendor to provide pressure drop for trayed and packed sections separately.

Acknowledgment: *This material is based upon work supported by the Department of Energy Award Number DE-FE0031848.*

Disclaimer: *This report was prepared as an account of work sponsored by an agency of the United States Government. Neither the United States Government nor any agency thereof, nor any of their employees, makes any warranty, express or implied, or assumes any legal liability or responsibility for the accuracy, completeness, or usefulness of any information, apparatus, product, or process disclosed, or represents that its use would not infringe privately owned rights. Reference herein to any specific commercial product, process, or service by trade name, trademark, manufacturer, or otherwise does not necessarily constitute or imply its endorsement, recommendation, or favoring by the United States Government or any agency thereof. The views and opinions of authors expressed herein do not necessarily state or reflect those of the United States Government or any agency thereof.*

REV	DATE	DESCRIPTION	BY	CHKD	APPD		
1	14-Aug-20	ISSUED FOR INFORMATION	MJC	DT	MJC/ADB		
0	26-Jun-20	ISSUED FOR INFORMATION	AAR	DT	MJC/ADB		

BECHTEL

Process Data Sheet Trays and Packing - Stripper

JOB No	**26301**	
DATA SHEET No.		REV
Bechtel: 26301-000-M5D-CN-00052 Owner: NOT USED		1
SHEET	1 OF 4	

REVISION

	CLIENT: U. S. Department of Energy, Office of Fossil Energy, National Energy Technology Laboratory		EQUIPMENT No : T-103		
	PROJECT : FEED Study for Carbon Capture Plant Retrofit		UNIT :		
	SERVICE OF UNIT : STRIPPER - INTERNALS		VESSEL REFERENCE DRAWING 26301-000-M5D-CN-00051		
	SUPPLIER :		INTERNAL DETAILS REFERENCE DRAWING :		
	PROCESS DESIGN DATA				
	TRAY LOCATION				
	TRAY SECTION		TOP		
	TRAY NUMBERS FROM TOP		1-3		
	TOTAL TRAYS IN SECTION		3		
	CONDITIONS AT TRAY		1-3		
	VAPOR TO TRAY				
	FLOW	kg/hr	*		
	MOLECULAR WEIGHT		*		
	TEMPERATURE	°C	*		
	PRESSURE Stripper	kPa a	*		
	DENSITY	kg/m³	*		
	VOLUME FLOW	m³/hr	*		
	LIQUID FROM TRAY				
	FLOW	kg/hr	*		
	MOLECULAR WEIGHT		*		
	TEMPERATURE	°C	*		
	DENSITY	kg/m³	*		
	VOLUME FLOW (@ OPERATING TEMP & PRESS)	m³/hr	*		
	VISCOSITY	cP	*		
	SURFACE TENSION	Dynes/cm	*		
	TRAY DESIGN SPECIFICATION				
	DESIGN RATE, % OF INDICATED L & V RATES		By Vendor		
	MIN. OPER. RATE, % OF INDICATED L & V RATES (TURNDOWN)		50%		
	TOTAL ALLOWABLE TOWER ΔP	kPa	25		
	ΔP / TRAY, MAX ALLOWABLE	cm.H2O/mmHg			
	FOAMING TENDENCY (NONE/MODERATE/HIGH/SEVERE)		Moderate-Note 2		
	FOULING CONSIDERATION (NONE / SEE REMARK No.)		Note 3		
	MINIMUM TRAY EFFICIENCY				
	TRAY MATERIAL OF CONSTRUCTION		SS-304L, Note 1		
	VALVE MATERIAL OF CONSTRUCTION		SS-304L, Note 1		
	MAX. EXPECTED DIFFERENTIAL PRESSURE	kPa	By Vendor-Note 9		
	MAX/MIN EXPECTED OPERATING TEMPERATURE	°C	160/10		
	SPECIAL REMARKS (ALSO SEE REMARKS SECTION BELOW)				
	TRAY DETAILS (TO BE VERIFIED BY VENDOR)				
	TRAY TYPE (VALVE, SIEVE BUBBLE CAP, OTHER)		Valve		
	TYPE FLOW (NO FLOW PATHS)		By Vendor		
	COLUMN DIAMETER	mm	6,670		
	TRAY SPACING	mm	600		
	SYSTEM FACTOR		0.85		
	SIZE OR STYLE OF VALVE / SIEVE / BUBBLE CAP		Note 4		
	% OF FLOOD @ DESIGN, MAX. ALLOWABLE		80%		
	TRAY DETAILS (BY VENDOR)				
	% OF FLOOD DESIGN, CALCULATED				
	ΔP /TRAY ACTUAL	cm.H_2O/mmHg			
	CALCULATED DOWNCOMER BACK - UP CLEAR LIQUID	m			
	DOWNCOMER WIDTH	m			
	DOWNCOMER AREA	m²			
	ACTIVE AREA	m²			
	OUTLET WEIR LENGTH	m			
	OUTLET WEIR HEIGHT	mm			
	DOWNCOMER CLEARANCE	m			
	No OF VALVES / HOLES / BUBBLE CAPS PER TRAY				
	FLOW PATH LENGTH	m			

NOTES

* Refer to sheet 4 for Vapor/Liquid Profile and Properties

1) Vendor to confirm material suitability for Amine Solutions.

2) System factor is 0.85

3) Vendor to recommend measures taken to avoid fouling in amine service based on amine service experience.

4) Vendor to consider reduced bubbling area in order to assure good liquid/vapor contact.

BECHTEL		JOB No	26301	
		DRAWING No		REV
	Process Data Sheet - Trays	Bechtel: 26301-000-M5D-CN-00052 Owner: NOT USED		1
		SHEET No.	2 OF 4	

CLIENT: U. S. Department of Energy, Office of Fossil Energy, National Energy Technology Laboratory	EQUIPMENT No : T-103	
PROJECT : FEED Study for Carbon Capture Plant Retrofit	UNIT :	
SERVICE OF UNIT : STRIPPER - INTERNALS	VESSEL REFERENCE DRAWING : 26301-000-M5D-CN-00051	
SUPPLIER :	INTERNAL DETAILS REFERENCE DRAWING :	

PROCESS DESIGN DATA

PACKED BED LOCATION				
BED DESCRIPTION / LOCATION		CO_2 Stripping		
THEORETICAL STAGES FROM TOP		2-11		
CONDITIONS AT STAGE		11		
VAPOR TO STAGE				
FLOW	kg/hr	*		
MOLECULAR WEIGHT		*		
TEMPERATURE	°C	*		
PRESSURE	kPa(a)	*		
DENSITY	kg/m³	*		
VOLUME FLOW	m³/hr	*		
LIQUID FROM STAGE				
FLOW	kg/hr	*		
MOLECULAR WEIGHT		*		
TEMPERATURE	°C	*		
DENSITY	kg/m³	*		
VOLUME FLOW (@ OPERATING TEMP & PRESS)	m³/hr	*		
VISCOSITY	cP	*		
SURFACE TENSION	Dynes/cm	*		

PACKED BED DESIGN SPECIFICATION

DESIGN RATE, % OF INDICATED L & V RATES		By Vendor		
MIN. OPER. RATE, % OF INDICATED L & V RATES (TURNDOWN)		50		
TOTAL ALLOWABLE TOWER ΔP	kPa	25		
ΔP /METRE PACKING, MAX ALLOWABLE	cm.H2O/mmHg			
FOAMING TENDENCY (NONE/MODERATE/HIGH/SEVERE)		Moderate-Note 2		
FOULING CONSIDERATION (NONE / SEE REMARK No.)		Note 3		
REQUIRED NUMBER OF THEORETICAL STAGES		10		
PACKING MATERIAL OF CONSTRUCTION		SS 304L - Note 1		
PACKED BED MATERIAL OF CONSTRUCTION				
MAX. EXPECTED DIFFERENTIAL PRESSURE	kPa	By Vendor-Note 9		
MAX/MIN EXPECTED OPERATING TEMPERATURE	°C	160/10		
SPECIAL REMARKS (ALSO SEE REMARKS SECTION BELOW)				

PACKED BED DETAILS (TO BE VERIFIED BY VENDOR)

COLUMN DIAMETER	mm	6,670		
PACKING TYPE		Structured		
ESTIMATED BED HEIGHT (EXISTING)	mm			
DISTRIBUTOR TYPE				
BED SUPPORT TYPE	m			
BED HOLDOWN TYPE				
OTHER INTERNAL TYPE				

PACKED BED DETAILS (BY VENDOR)

MAXIMUM % OF FLOOD ALLOWABLE		80%		
% OF FLOOD @ DESIGN, CALCULATED				
ΔP /METRE, ACTUAL	cm.H_2O/mmHg			
PACKING EFFICIENCY - HETP	m			
ACTUAL BED HEIGHT	m			
PACKING STYLE IDENTIFIED				
DISTRIBUTOR STYLE IDENTIFIED				
BED SUPPORT STYLE IDENTIFIED				
BED HOLDOWN STYLE IDENTIFIED				
OTHER INTERNAL STYLE IDENTIFIED				
PACKING BULK DENSITY	kg/m³			

NOTES

* Refer to sheet 4 for Vapor/Liquid Profile and Properties

	CLIENT: U. S. Department of Energy, Office of Fossil Energy, National Energy Technology Laboratory	EQUIPMENT No : T-103
	PROJECT : FEED Study for Carbon Capture Plant Retrofit	UNIT :
	SERVICE OF UNIT : Stripper Internals	VESSEL REFERENCE DRAWING : 26301-000-M5D-CN-00051
	SUPPLIER :	INTERNAL DETAILS REFERENCE DRAWING :

PROCESS DESIGN DATA

Vapor Phase Properties

Stage	Temperature	Pressure	Molecular Weight	Mass Density	Mass Flow	Mass Cp	Dynamic Viscosity	Thermal Conductivity
	°C	barg	kg/kmol	kg/m^3	kg/h	kJ/(kg*°C)	cP	W/(m*°C)
1	109.3	1.3	28.05	2.021	213,217	1.329	0.0167	0.0254
2	112.5	1.3	28.05	2.035	213,928	1.334	0.0168	0.0257
3	112.8	1.3	28.12	2.069	175,986	1.332	0.0168	0.0257
4	113.4	1.4	28.03	2.090	177,051	1.336	0.0168	0.0258
5	114.5	1.4	27.70	2.090	169,614	1.351	0.0168	0.0259
6	116.1	1.4	27.09	2.065	172,341	1.378	0.0167	0.0262
7	118.2	1.5	26.19	2.015	176,198	1.419	0.0165	0.0266
8	120.7	1.5	25.04	1.943	181,170	1.477	0.0162	0.0271
9	123.3	1.5	23.75	1.858	186,914	1.548	0.0159	0.0276
10	125.9	1.6	22.44	1.769	192,875	1.629	0.0155	0.0282
11	128.4	1.6	21.13	1.679	198,558	1.722	0.0150	0.0288

Liquid Phase Properties

Stage	Temperature	Pressure	Molecular Weight	Mass Density	Mass Flow	Mass Cp	Dynamic Viscosity	Thermal Conductivity
	°C	barg	kg/kmol	kg/m^3	kg/h	kJ/(kg*°C)	cP	W/(m*°C)
1	109.3	1.3	18.61	956.1	8,825	4.161	0.2649	0.6448
2	112.5	1.3	26.10	1,132.6	2,231,960	3.456	0.7603	0.3931
3	112.8	1.3	26.10	1,132.4	2,233,025	3.458	0.7556	0.3932
4	113.4	1.4	26.08	1,131.3	2,234,729	3.463	0.7446	0.3937
5	114.5	1.4	26.04	1,128.9	2,237,456	3.471	0.7247	0.3949
6	116.1	1.4	25.97	1,125.0	2,241,314	3.483	0.6954	0.3968
7	118.2	1.5	25.88	1,119.2	2,246,285	3.499	0.6580	0.3996
8	120.7	1.5	25.75	1,111.5	2,252,030	3.519	0.6157	0.4033
9	123.3	1.5	25.61	1,101.9	2,257,990	3.540	0.5724	0.4078
10	125.9	1.6	25.44	1,090.3	2,263,674	3.565	0.5305	0.4131
11	128.4	1.6	25.25	1,075.6	2,269,042	3.593	0.4896	0.4197

NOTES

5) Vapor flow and properties are for Vapor From Stage

6) Liquid flow and properties are for Liquid From Stage

7) Liquid is 35%wt MEA aqueous solution

8) Random or Structured Packing are acceptable for both trayed and packed sections.

9) Amine (liquid) viscosity of 50% higher than reported in this sheet shall be considered for pressure drop evaluation.
No additional allowance shall be considered for viscosity excursion.

9) Liquid Phase Properties - Surface Tension (dynes/cm)

Stage 1	55.8
Stage 2	89.1
Stage 3	89.0
Stage 4	88.7
Stage 5	88.2
Stage 6	87.3
Stage 7	86.0
Stage 8	84.4
Stage 9	82.3
Stage 10	46.5
Stage 11	46.3

CLIENT	:	**U. S. Department of Energy, Office of Fossil Energy, National Energy Technology Laboratory**
PROJECT TITLE	:	**FEED Study for Carbon Capture Plant Retrofit**
JOB NUMBER	:	**26301**
M.R. NUMBER	:	
EQUIPMENT NUMBER	:	ME-110 A-H
EQUIPMENT TITLE	:	STRIPPER REBOILER
SERIAL NUMBER	:	
CRITICALITY RATING	:	

COMMENTS:

A. Vendor to add all missing data.

B. Maximum number of reboilers is 8 x 12.5%. Vendor to advise alternative configuration of 4 x 25% or 6 x 16.7% reboilers, where achievable.

Acknowledgment: *This material is based upon work supported by the Department of Energy Award Number DE-FE0031848.*

Disclaimer: *This report was prepared as an account of work sponsored by an agency of the United States Government. Neither the United States Government nor any agency thereof, nor any of their employees, makes any warranty, express or implied, or assumes any legal liability or responsibility for the accuracy, completeness, or usefulness of any information, apparatus, product, or process disclosed, or represents that its use would not infringe privately owned rights. Reference herein to any specific commercial product, process, or service by trade name, trademark, manufacturer, or otherwise does not necessarily constitute or imply its endorsement, recommendation, or favoring by the United States Government or any agency thereof. The views and opinions of authors expressed herein do not necessarily state or reflect those of the United States Government or any agency thereof.*

REV	DATE	DESCRIPTION	BY	CHKD	APPD		
0	07-Jul-20	ISSUED FOR INFORMATION	AAR	DT	MJC/ADB		

BECHTEL

Heat Exchanger (Plate) Data Sheet - Stripper Reboiler

JOB No	**26301**	
DATA SHEET No.		REV
Bechtel: 26301-000-M5D-CN-00053 Owner: NOT USED		0
SHEET	1 OF 4	

Applicable To: ☐ Proposal ☐ Purchase ☐ As Built ☐ ASME ☐ API ☐ Other _____

Manufacturer _____ Model _____ Serial No. _____

GENERAL DATA

Stream Number			1		2		3		4	
Stream Name			STRIPPER BOTTOMS (Note 5)		STEAM					
Fluid Quantity			IN	OUT	IN	OUT	IN	OUT	IN	OUT
Vapor		kg/h	-	203,927	-	-				
Liquid		kg/h	2,269,042	2,065,116	-	-				
Steam		kg/h	-	-	208,042	-				
Water		kg/h	-	-	-	208,042				
Non-Condensable		kg/h	-	-	-	-				
Temperature		°C	128.4	131.0	135.0	133.9				
Vapor			-	-	-	-				
Density		kg/m³	-	1.566	1.697	-				
Viscosity		Pa.s	-	0.0000145	0.0000139	-				
Thermal Conductivity		W/(m-K)	-	0.0295	0.0305	-				
Specific Heat		kJ/(kg-K)	-	1.834	1.957	-				
Molecular Weight			-	19.813	18.015	-				
Liquid			-	-	-	-				
Density		kg/m³	1,075.6	1,076.6	-	932.0				
Viscosity (Note 3)		Pa.s	0.000490	0.000516	-	0.000203				
Thermal Conductivity		W/(m-K)	0.420	0.409	-	0.686				
Specific Heat		kJ/(kg-K)	3.593	3.824	-	4.275				
Pressure		kPag	161		213					
Velocity		m/s								
Latent Heat		kj/kg								
Pressure Drop	Allow.	kPa	20 (Note 4)		10					
Pressure Drop	Calc.	kPa								
Fouling Factor		m²-°C/W	(Note 1)		(Note 1)					
Number of Passes										
Heat Exchanged		kW	**125,455**		**125,455**					
MTD		°C								
Transfer Rate	Clean	kW/(m²-K)								
Transfer Rate	Service	kW/(m²-K)								

CONSTRUCTION

Number of Plate Heat Exchanger Units			**8**							
Number of Cores per Unit										
Core Width		mm								
Core height		mm								
Core Length		mm								
Parting Sheet Thickness		mm								
Outside Sheet Thickness		mm								
Number of Dummy Layers										
Number of Passages										
Passage Width (Effective)		mm								
Passage Length (Effective)		mm								
Fin Type										
Fin Height x Thickness		mm								
Number of Fins per Inch										
Surface Area (Effective)		m²								
Distributor										
Nozzles.			IN	OUT	IN	OUT	IN	OUT	IN	OUT
Rating										
Size		mm								
Number										
Design Pressure		kPag	400		500					
Test Pressure		°C								
Design Temperature	Max	°C	270		270					
	Min	°C	-17		-17					
Design Code										
Manufacturing Standards										
Weights	Operating									
	Full of water									

- DESIGN - MATERIALS - CONSTRUCTION -

Stream Number		1	2	3	4
Stream Name		STRIPPER BOTTOMS	STEAM		
Dimensions					
Width	mm				
Depth	mm				
Height	mm				
Material - (Note 2)		SS 316L	SS 316L		
Structural Design Code					
Wind Load Design Code					
Seismic Zone					
Insulation Filling					

DESIGN DATA

	Temperature °C	Pressure kPaA	Enthalpy kJ/kg	Vapor Fraction Mol %	Vapor Fraction Vol %	Heat Duty kW
1	128.41	261.0		0.00	0.00	0
2	128.85	261.0		1.06	85.15	12,518
3	129.22	261.0		2.15	92.15	25,036
4	129.54	261.0		3.27	94.73	37,554
5	129.81	261.0		4.40	96.07	50,072
6	130.06	261.0		5.54	96.89	62,590
7	130.28	261.0		6.70	97.44	75,108
8	130.48	261.0		7.87	97.83	87,626
9	130.66	261.0		9.05	98.13	100,144
10	130.83	261.0		10.23	98.36	112,662
11	131.00	261.0		11.42	98.54	125,180

HEAT RELEASE CURVE - STREAM 1 @ 261 kPaA (Reboiler Outlet)

	Temperature °C	Pressure kPaA	Enthalpy kJ/kg	Vapor Fraction Mol %	Vapor Fraction Vol %	Heat Duty kW
1	130.40	281.0		0.00	0.00	0
2	130.91	281.0		1.03	83.92	12,518
3	131.33	281.0		2.10	91.46	25,036
4	131.69	281.0		3.20	94.27	37,554
5	132.00	281.0		4.32	95.73	50,072
6	132.27	281.0		5.45	96.62	62,590
7	132.51	281.0		6.60	97.22	75,108
8	132.74	281.0		7.76	97.65	87,626
9	132.94	281.0		8.93	97.97	100,144
10	133.13	281.0		10.10	98.22	112,662
11	133.30	281.0		11.29	98.42	125,180

HEAT RELEASE CURVE - STREAM 1 @ 281 kPaA (Reboiler Inlet) - NOTE 6

NOTES:

1. Vendor to advise margin to account for fouling in amine service (minimum 10%).
2. Vendor to confirm material selection based on own product experience in amine service.
3. Heat exchangers should be suitable for 150% stated viscosity (amine side only) without applying other design margins.
4. Pressure drop of up to 50 kPa may be acceptable if it enables vendor to reduce number of exchanger units.
5. The fluid is nominal 35 wt.% MEA solvent.
6. Heat Release curve @ 281 kPaA represents maximum pressure conditions at reboiler inlet.

CLIENT	:	**U. S. Department of Energy, Office of Fossil Energy, National Energy Technology Laboratory**
PROJECT TITLE	:	**FEED Study for Carbon Capture Plant Retrofit**
JOB NUMBER	:	**26301**
M.R. NUMBER	:	
EQUIPMENT NUMBER	:	MS-102
EQUIPMENT TITLE	:	AMINE RECLAIMER
SERIAL NUMBER	:	
CRITICALITY RATING	:	

COMMENTS:

VENDOR TO REVIEW AND CONFIRM THE MASS BALANCE AND EQUIPMENT DESIGNS PROVIDED IN DATASHEET. (REFER TO SHEETS 3, 4, 5, 6, 7)

* VENDOR TO COMPLETE DATA MARKED WITH ASTERISK. (SHEET 8)

PROCESS FLOW DIAGRAM (SHEET 9) SHOWS PROCESS STREAMS, UTILITIES, PROCESS EQUIPMENT AND CONTROL SCHEMES.
(REFERENCE: 26301-000-M5-CN-00006 Rev.1)

VENDOR TO PROVIDE ALL EQUIPMENT, PIPING AND INSTRUMENTS SHOWN INSIDE PACKAGE.VENDOR TO PROVIDE WAREHOUSE SPARE FOR EACH PUMP.

ESTIMATED EQUIPMENT SIZES SPECIFIED IN THIS DATASHEET SHALL BE TAKEN AS THE MINIMUM SIZE.

VENDOR TO CONFIRM MAXIMUM AND NORMAL UTILITY CONSUMPTION RATES

THE FOLLOWING DESIGN MARGINS SHALL APPLY;
- HEAT EXCHANGERS : 20% MARGIN ON FLOW AND DUTY
  - FOULING FACTOR (PROCESS SIDE) = 0.00035 m².°C/W
  - FOULING FACTOR (STEAM/COOLING WATER SIDE) = 0.0001 m².°C/W
- RECIRCULATION PUMPS: NO MARGIN REQUIRED
- KNOCK OUT DRUM PUMP: 50% ON FLOW

Acknowledgment: This material is based upon work supported by the Department of Energy Award Number DE-FE0031848.

Disclaimer: This report was prepared as an account of work sponsored by an agency of the United States Government. Neither the United States Government nor any agency thereof, nor any of their employees, makes any warranty, express or implied, or assumes any legal liability or responsibility for the accuracy, completeness, or usefulness of any information, apparatus, product, or process disclosed, or represents that its use would not infringe privately owned rights. Reference herein to any specific commercial product, process, or service by trade name, trademark, manufacturer, or otherwise does not necessarily constitute or imply its endorsement, recommendation, or favoring by the United States Government or any agency thereof. The views and opinions of authors expressed herein do not necessarily state or reflect those of the United States Government or any agency thereof.

REV	DATE	DESCRIPTION	BY	CHKD	APPD		
1	28-Aug-20	ISSUED FOR INFORMATION	ADB	MJC	MJC/ADB		
0	20-Jul-20	ISSUED FOR INFORMATION	MJC	DT	MJC/ADB		

BECHTEL	**Package Data Sheet - Amine Reclaimer**	JOB No	**26301**
		DATA SHEET No.	REV
		Bechtel: 26301-000-M5D-CN-00054 Owner: NOT USED	1
		SHEET 1 OF 9	

DESCRIPTION

The Sherman reclaimer is a two-stage, dual-pressure, continuous reclaimer design. Reclaimer feed is hot lean amine from stripper bottoms at 131.0°C. The first stage flash operates on lean amine feed only at 150°C and 2.62 bara, venting flash vapor directly to the stripper column. Liquid from the first stage flash is mixed with injection water and charged to the second stage. The second stage flash operates at 150°C and 1.10 bara venting through a water-cooled condenser and KO drum to one of the absorber columns. Condensate from the KO drum is pumped to the lean amine tank. Liquid residue from the 2nd stage flash is quenched with cold water and pumped to a tanker truck or trailer for disposal. A Process Flow Diagram is provided as reference.

Each flash stage is equipped with a flash drum, a recirculation pump and a steam heat exchanger. The recirculation pump is sized to produce 3 wt % vaporization during operation. A forced circulation heat exchanger is specified to reduce tube fouling and to simplify exchanger tube cleaning (as compared to kettle-type reclaimers used in lower temperature reclaiming operations).

Water injection rate to the 2nd stage flash is set to recover 90% of total MEA in reclaimer feed.

Steam supply is 7.0 bara saturated steam, and cooling water supply is at 28.6°C. 50 wt% caustic is added to reclaimer feed to stoichiometrically neutralize both organic and inorganic Heat Stable Salts (HSS).

The reclaimer feed rate is set to treat the entire Sherman solvent inventory (estimated at 1235 m^3, 36 wt % MEA) within four weeks' calendar time, assuming continous operation six days per week (24 days' operation plus 4 days' standby per 28-day cycle). Reclaimer standby time allows for changeout of residue truck or trailer and for maintainence, inspection and cleanup of the reclaimer equipment.

Buildup of HSS and thermal degradation products in the Sherman solvent system has been estimated based on literature information, and is expected to total 5-6 wt% of the amine solvent. See sheet 4.

RECLAIMER MASS BALANCE

The estimated reclaimer mass balance is summarized in the tables below.

The vendor is to confirm the reasonableness of the estimated flash vapor and liquid compositions listed. The vendor is also to confirm the physical properties, primarily mass density, used in sizing reclaimer equipment.

In the mass balance table below, the Heat Stable Salts in the lean amine feed from the stripper are MEA salts of organic and inorganic acids, whereas the HSS in the 1st and 2nd stage flashes are the completely neutralized Sodium salts of those same acids. As shown, neutralization of HSS in the reclaimer is estimated to recover 25.7 kg/hour of MEA. See Sheet 4 for more information on HSS.

Component	Mol Wt	Lean Amine ex Stripper @ 131C	50 wt% Caustic @ 25C	Neutralized Feed to 1st Flash	1st Flash Vapor 150C, 2.62 bara	1st Flash Liquid @ 150C	Water Injection @ 25C	2nd Stage Flash Feed
MEA	61.1	912.7		938.4	332.4	606.0		606.0
H_2O	18.0	1349.1		1366.0	1200.1	165.9	781.6	947.5
CO_2	44.0	167.2		167.2	133.0	34.2		34.2
Thermally Degraded Amine		96.5		96.5		96.5		96.5
HSS		46.0		37.0		37.0		37.0
NaOH	40.0		33.7					
Nitrogen	28.0							
Totals, kg/hour		2571.5	33.7	2605.1	1665.5	939.6	781.6	1721.2
Totals, mols/hour					75.1			
Vapor Mol Wt					22.2			

Component	Mol Wt	2nd Stage Flash Feed	2nd Stage Vapor, 150C,1.1bara	2nd Stage Flash Liquid (Residue)	N_2 Add'n to 2nd Flash Vapor	2nd Flash Vapor Condensate	Vent Gas to Absorber, 50C,1.05bara
MEA	61.1	606.0	512.1	93.9		512.1	0
H_2O	18.0	947.5	938.9	8.6		937.8	1.12
CO_2	44.0	34.2	34.2	0		34.2	0
Thermally Degraded Amine		96.5		96.5			
HSS		37.0		37.0			
Nitrogen	28.0				14.85		14.85
Totals, kg/hour		1721.2	1485.2	236.0	14.9	1484.1	15.98
Totals, mols/hour			61.3				0.59
Vapor Mol Wt			24.2				26.9

Quench water to cool residue product to 100C

Cold quench water is added to reclaimer residue to cool from 150C to 100C to ensure no flashing of residue in the tank truck or trailer.

Assume quench water at 25C. Assume specific heat of residue = 0.75 kcal/kg°C and specific heat of water = 1.0 kcal/kg°C.

At residue flow rate = 236 kg/hr, quench water rate = 236*(50/75)*(0.75/1.0) = 118 kg/hour

THERMAL DEGRADATION PRODUCTS & HEAT STABLE SALTS (HSS)

Themal degradation products are produced primarily by high stripper temperatures. The thermal degradation products are high molecular weight (±150-200 mol wt), low-volatility, soluble polymeric condensation products. Being low-volatility, these thermal degradation products remain in the reclaimer flash residue and are removed from the solvent inventory. Based on literature data, adjusted for Sherman operating conditions, the daily generation rate of thermal degradation products is expected to be about 0.4 wt% of the MEA in the amine system.

Heat stable salts are produced by oxidation of MEA in the absorber and in the rich amine heat exchange train. Organic HSS result from organic acids generated from MEA oxidation, and inorganic HSS result from nitrates generated by MEA oxidation. A small amount of inorganic HSS result from sulfates that are generated from sulfur compounds in the feed gas. The HSS are neutralized with caustic in the reclaimer, which liberates the combined MEA for recovery and produces sodium salts of the organic and inorganic acids. Based on adjusted literature data, the daily generation rate of HSS at Sherman is expected to be a little more than 0.1 wt% of the MEA in the solvent inventory.

HSS Formation Chemistry - Simplified chemistry of Heat Stable Salt formation and neutralization is shown below, using formic acid as a typical organic acid formed by complex MEA oxidation reactions in the absorber.

Formation of Formate HSS:	Formic acid	+	MEA	=	Formate HSS	+	Water	
Formula	HCOOH	+	$H_2NC_2H_4OH$	=	$HCO{\cdot}NHC_2H_4OH$	+	H_2O	
Mol Wts	46	+	61	=	89	+	18	
Caustic Neutralization of Formate HSS:	Formate HSS	+	Caustic	=	MEA	+	Sodium salt	
Formula	$HCO{\cdot}NHC_2H_4OH$	+	NaOH	=	$H_2NC_3H_4OH$	+	HCOONa	
Mol Wts	89	+	40	=	61	+	68	

HSS Component Distribution - The table below summarizes the assumed component breakdown for the major HSS in the amine solvent, taken from literature data. The molecular weights of the individual anions, the MEA salts from those anions (the "HSS"), and the sodium salts (as neutralized in the reclaimer) are listed.

HSS Anion	Anion mg/l	Anion mol wt	Anion kgmol/l	Anion wt. fraction	MEA Salts mol wt	Sodium Salts mol wt
formate	3000	45	0.0667	0.273	89	68
glycolate	400	75	0.0053	0.036	119	98
acetate	500	59	0.0085	0.045	103	82
oxalate	1200	125	0.0096	0.109	159	148
unknown*	4600	73	0.0630	0.418	117	96
S/T organics	9700	63.4	0.1531	0.882	109.3	87.9
nitrate	1200	62	0.0194	0.109	106	85
sulfate	100	96	0.0010	0.009	182	142
S/T inorganics	1300	63.7	0.0204	0.118	109.5	87.7
Total	11000	63.4	0.1735	1.000		

*presumed to be glyoxylate

CLIENT: U. S. Department of Energy, Office of Fossil Energy, National Energy Technology Laboratory	EQUIPMENT No : MS-102
PROJECT : FEED Study for Carbon Capture Plant Retrofit	UNIT :
SERVICE OF UNIT : Amine Reclaimer	
SUPPLIER :	P&ID REFERENCE DRAWING :

ESTIMATED RECLAIMER EQUIPMENT SIZES

Reclaimer Pumps Sizing: Since both 1st and 2nd stage reclaimer flashes operate at very high percent net vaporization rates (64-86 wt%, 99+ vol%), provide recirculation pumps for both flash stages. Size recirc pumps for 3 wt% vaporization. The KO drum pump is sized for 150% of mass balance flow.

First Stage recirculating pump size:

Pump capacity @ 3 wt% vaporization = 1665.5/0.03 =	55520	kg/hr
At estimated liquid mass density = 1150 kg/m3, volumetric flow =	48.3	m3/hr
Pump head - allow 2.5 bar for heat exchanger, piping, controls & head difference	22.2	m
Pump driver power @ 50% overall efficiency =	8.9	kW

Second Stage recirculating pump size:

Pump capacity @ 3 wt% vaporization = 1485.1/0.03 =	49510	kg/hr
At estimated liquid mass density = 1250 kg/m3, volumetric flow =	39.6	m3/hr
Pump head - allow 2.5 bar for heat exchanger, piping, controls & head difference	20.4	m
Pump driver power @ 50% overall efficiency =	7.3	kW

KO Drum pump size:

Pump capacity @ 150 % of mass balance flow rate = 1484.2*1.5 =	2226	kg/hr
At estimated liquid mass density = 1100 kg/m3, volumetric flow =	2.02	m3/hr
Pump head - allow 2.0 bar for piping, controls & head difference	18.5	m
Pump driver power @ 50% overall efficiency =	0.3	kW

Flash Drum and KO Drum Sizing: These are vertical drums, size is based on vapor/liquid separation or on liquid holdup volume. Each drum shall have a vortex breaker on the liquid outlet. Demisters are not specified because of the possibility of foaming and/or fouling. Vendor to confirm suitability of suggested drum size.

1st Stage Reclaimer Flash Drum Size:

Vapor density @ 150C, 2.62 bara, 22.2 MW = ρv = MW*bara/(0.08315*°K) =	1.65	kg/m3
1st stage liquid residue density assumed to be 1150 kg/m3:	1150	kg/m3
Conservative allowable vapor velocity in flash drum = 0.05((ρl-ρv)/ρv)^½ =	1.32	m/sec
1st stage vapor flow = 1666 kg/hr @ 1.65 kg/m3 =	0.280	m3/sec
Minimum cross-sectional area of flash drum = 0.280/1.32 =	0.21	m2
Minimum diameter of flash drum =	0.52	m

So, 1st stage flash vessel sizing is set by liquid holdup, not vapor velocity.

1st stage liquid net product rate = 940 kg/hr @ estimated density = 1150 kg/m3 =	0.82	m3/hr
Set max liquid holdup (HLL to LLL) @ 30 minutes normal flow =	0.409	m3

Set vessel L/D = approx 3:1. At D = 0.75m, CSA = 0.442m2, HLL to LLL = 0.409/0.442 = 0.93m. Set LLL @ 0.15m, so HLL = 1.08m. Provide 1.4m disengaging space above HLL, so overall tan-tan = 1.1 + 1.4 = 2.5m.

1st stage reclaimer flash drum size = 0.75m diameter X 2.5m tan-tan with NLL @ 0.6m & HLL @ 1.1m

Provide a steam (7 bara) sparger in the bottom of the 1st stage flash drum for use during intermittent flushing and cleanout of the system. Design sparging rate = 1500 kg/hr.

ESTIMATED RECLAIMER EQUIPMENT SIZES - CONTINUED

2nd Stage Reclaimer Flash Drum Size:

Vapor density @ 150C, 1.10 bara, 24.2 MW = ρv = MW*bara/(0.08315*°K) =	0.757	kg/m3
2nd stage liquid residue density assumed to be 1250 kg/m3:	1250	kg/m3
Conservative allowable vapor velocity in flash drum = 0.05((ρl-ρv)/ρv)^½ =	2.03	m/sec
2nd stage vapor flow = 1485 kg/hr @ 0.757 kg/m3 =	0.545	m3/sec
Minimum cross-sectional area of flash drum = 0.545/2.03 =	0.27	m2
Minimum diameter of flash drum =	0.58	m

Set 2nd stage flash drum size same as first stage flash drum, which will provide excess CSA for separation of heavy residue entrainment.

2nd stage liquid (hot reclaimer residue) net production rate = 236 kg/hr @ 1250 kg/r	0.189	m3/hr
Set max liquid holdup (HLL to LLL) @ 60 minutes normal flow =	0.189	m3

At D = 0.75m, CSA = 0.442m2, HLL to LLL for 2nd stage = 0.189/0.442 = 0.43m. Set LLL @ 0.15m, so HLL = 0.58m. 1.9m disengaging space is available above HLL since 2nd stage residue is most likely to foam. Overall tan-tan length = 0.6 + 1.9 = 2.5m. OK.

2nd stage reclaimer flash drum size = 0.75m diameter X 2.5m tan-tan with NLL @ 0.4m & HLL @ 0.6r

Provide a steam (7 bara) sparger in the bottom of the 2nd stage flash drum for use during intermittent flushing and cleanout of the system. Design sparging rate = 1500 kg/hr.

KO Drum Size:

KO drum vapor rate is only 16 kg/hr, so drum size is set by liquid holdup, not by vapor velocity.

KO drum condensate @ 150% of mass balance flow rate =	2.02	m3/hr
Set max liquid holdup @ 15 minutes of design flow =	0.51	m3

Set KO drum size same as 1st and 2nd stage flash drums.

At D = 0.75m, CSA = 0.442m2, HLL to LLL = 0.51/0.442 = 1.15m. Set LLL @ 0.15m, so HLL = 1.3m. 1.2m disengaging space above HLL should be OK since condensate is clean, so overall tan-tan = 1.3 + 1.2 = 2.5m.

Reclaimer KO drum size = 0.75m diameter X 2.5m tan-tan with NLL @ 0.7m & HLL @ 1.3m.

Reclaimer Heat Exchanger Sizing: Provide 20% margin on mass balance heat duty for all heat exchangers. The 1st and 2nd stage flash exchangers are, as stated above, horizontal shell & tube, fixed tubesheet, two pass, exchangers with steam on shell side. This will provide for effective water flushing of the flash exchangers using the recirc pumps plus will permit ready and easy mechanical cleaning of tubes fouled by residue. The 2nd stage flash gas condenser is a water-cooled, shell & tube unit with cooling water in the tubes. Reclaimer vendor to confirm exchanger duties, heat transfer coefficients, MTDs, and surface areas.

1st Stage Flash Exchanger:

Estimated normal mass balance heat duty including heat of CO2 dissociation and heat of HSS neutralization =	3.29 x 10^6	kJ/hour
Design heat duty including 20% margin =	3.95 x 10^6	kJ/hour

Assume heat transfer coefficient incl fouling factor = 3000 kJ/hr°Km² (150 Btu/hr°Fft²).

Set inlet temperature at 150C, outlet at 155C, steam at 7 bara & sat'n temp of 165C.

Estimated LMTD = 12.3, heat exchanger surface area =	107	m2
Use 1" (25mm) tubes @ 20' (6m) length, area/tube = 5.236ft2 = 0.486m2. Tube count	220	tubes
Use heavy wall (14 BWG) tubes, internal CSA/tube = 3.525 cm2. Tube inlet velocity =	0.35	m/sec
Approx tube outlet velocity for 1st stage flash (two-phase) =	7.6	m/sec

Estimated shell diameter @ 220 tubes = 24" = 60 cm.

ESTIMATED RECLAIMER EQUIPMENT SIZES - CONTINUED

2nd Stage Flash Exchanger:

Estimated normal mass balance heat duty incl heat of CO2 dissociation =	2.95 x 10^6	kJ/hour
Design heat duty including 20% margin =	3.53 x 10^6	kJ/hour
Assume heat transfer coefficient incl fouling factor = 3000 kJ/hr°Km² (150 Btu/hr°Fft²).		
Set inlet temperature at 150C, outlet at 155C, steam at 7 bara & sat'n temp of 165C.		
Estimated LMTD = 12.3, heat exchanger surface area =	95.8	m2
Use 1" (25mm) tubes @ 20' (6m) length, area/tube = 5.236ft2 = 0.486m2. Tube count	198	tubes
With heavy wall (14 BWG) tubes, internal CSA/tube = 3.525 cm2. Tube inlet velocity	0.32	m/sec
Approx tube outlet velocity for 2nd stage flash (two-phase) =	16	m/sec

Estimated shell diameter @ 198 tubes = 22" = 55 cm.

2nd Stage Flash Gas Condenser:

The flash gas condenser operates at absorber pressure of 1.05 bara. Feed to condenser is 2nd stage flash gas at 150C plus 1 wt% nitrogen gas. Condenser outlet temperature is 50C. Cooling water supply is 28.6C supply, 39.4C return.

Estimated normal mass balance condenser duty =	3.10 x 10^6	kJ/hour
Design condenser duty including 20% margin =	3.72 x 10^6	kJ/hour
Assume heat transfer coefficient incl fouling factor = 3400 kJ/hr°Km² (170 Btu/hr°Fft²).		
Rough estimate of effective MTD = 60C (Vendor to confirm.) Est'd surface area =	18.2	m2
Use 1" (25mm) tubes @ 10' (3m) length, area/tube = 2.618ft2 = 0.243m2. Tube count	76	tubes

Estimated shell diameter @ 76 tubes = 16" = 40 cm.

CLIENT: U. S. Department of Energy, Office of Fossil Energy, National Energy Technology Laboratory		EQUIPMENT No :	MS-102
PROJECT : FEED Study for Carbon Capture Plant Retrofit		UNIT :	
SERVICE OF UNIT : Amine Reclaimer			
SUPPLIER :		P&ID REFERENCE DRAWING :	

PROCESS STREAM INPUT 1					**PROCESS STREAM OUTPUT 1**				
Fluid / Gas Name:	**Stripper Bottoms**				Fluid / Gas Name:	**Vent Gas**			
Flowrate: Norm		**2.39**	Act m^3/h		Flowrate: Norm		**14.29**	Act m^3/h	
Flowrate: Norm		**2,572**	kg/h		Flowrate: Norm		**15**	kg/h	
Supply Conditions	Pres. kPa g	Temp.	°C		Supply Conditions	Pres. kPa g	Temp.	°C	
Normal	540	131			Normal	5	50		
Viscosity		0.8	cP						
PROCESS STREAM INPUT 2					**PROCESS STREAM OUTPUT 2**				
Fluid / Gas Name:	**Caustic Soda (50% solution)**				Fluid / Gas Name:	**Process Condensate**			
Flowrate: Norm		**0.02**	Act m^3/h		Flowrate: Norm		**1.35**	Act m^3/h	
Flowrate: Norm		**34**	kg/h		Flowrate: Norm		**1,484**	kg/h	
Supply Conditions	Pres. kPa g	Temp.	°C		Supply Conditions	Pres. kPa g	Temp.	°C	
Normal	*	25			Normal	205	50		
					Viscosity		0.8	**cP**	
PROCESS STREAM OUTPUT 1					**PROCESS STREAM OUTPUT 2**				
Fluid / Gas Name:	**Vapors Return**				Fluid / Gas Name:	**Residue**			
Flowrate: Norm		**1009.39**	Act m^3/h		Flowrate: Norm		**0.31**	Act m^3/batch	
Flowrate: Norm		**1666**	kg/h		Flowrate: Norm		**354**	kg/h	
Supply Conditions	Pres. kPa g	Temp.	°C		Supply Conditions	Pres. kPa g	Temp.	°C	
Normal	162	150			Normal	10	100		
					Viscosity		2.0 to 4.0	**cP**	

UTILITIES

MP STEAM					**CONDENSATE**				
MP Steam Consumption	3,017	kg/h			Condensate Return	3,017	kg/h		
Supply Conditions	Pres. kPa g	Temp.	°C		Supply Conditions	Pres. kPa g	Temp.	°C	
Minimum					Minimum				
Normal	600	165			Normal	*	*		
Maximum					Maximum				
Design					Design				
INSTRUMENT AIR					**Nitrogen**				
Instrument Air Consumption	*	m^3/h			Nitrogen Consumption	15	kg/h		
Supply Conditions	Pres. kPa g	Temp.	°C		Supply Conditions	Pres. kPa g	Temp.	°C	
Minimum					Minimum				
Normal	700	25			Normal	500	25		
Maximum					Maximum				
Design					Design				
PROCESS WATER					**LP STEAM**				
Process WaterConsumption	0.90	m^3/h			LP Steam Consumption	MAX 1500	kg/h		
Supply Conditions	Pres. kPa g	Temp.	°C		Supply Conditions	Pres. kPa g	Temp.	°C	
Minimum					Minimum				
Normal	314	25			Normal	213	135		
Maximum					Maximum				
Design					Design				

CLIENT: U. S. Department of Energy, Office of Fossil Energy, National Energy Technology Laboratory		EQUIPMENT No :	MS-102
PROJECT :	FEED Study for Carbon Capture Plant Retrofit	UNIT :	
SERVICE OF UNIT :	Amine Reclaimer		
SUPPLIER :		P&ID REFERENCE DRAWING :	

PFD (26301-000-M5-CN-00006 Rev.1)

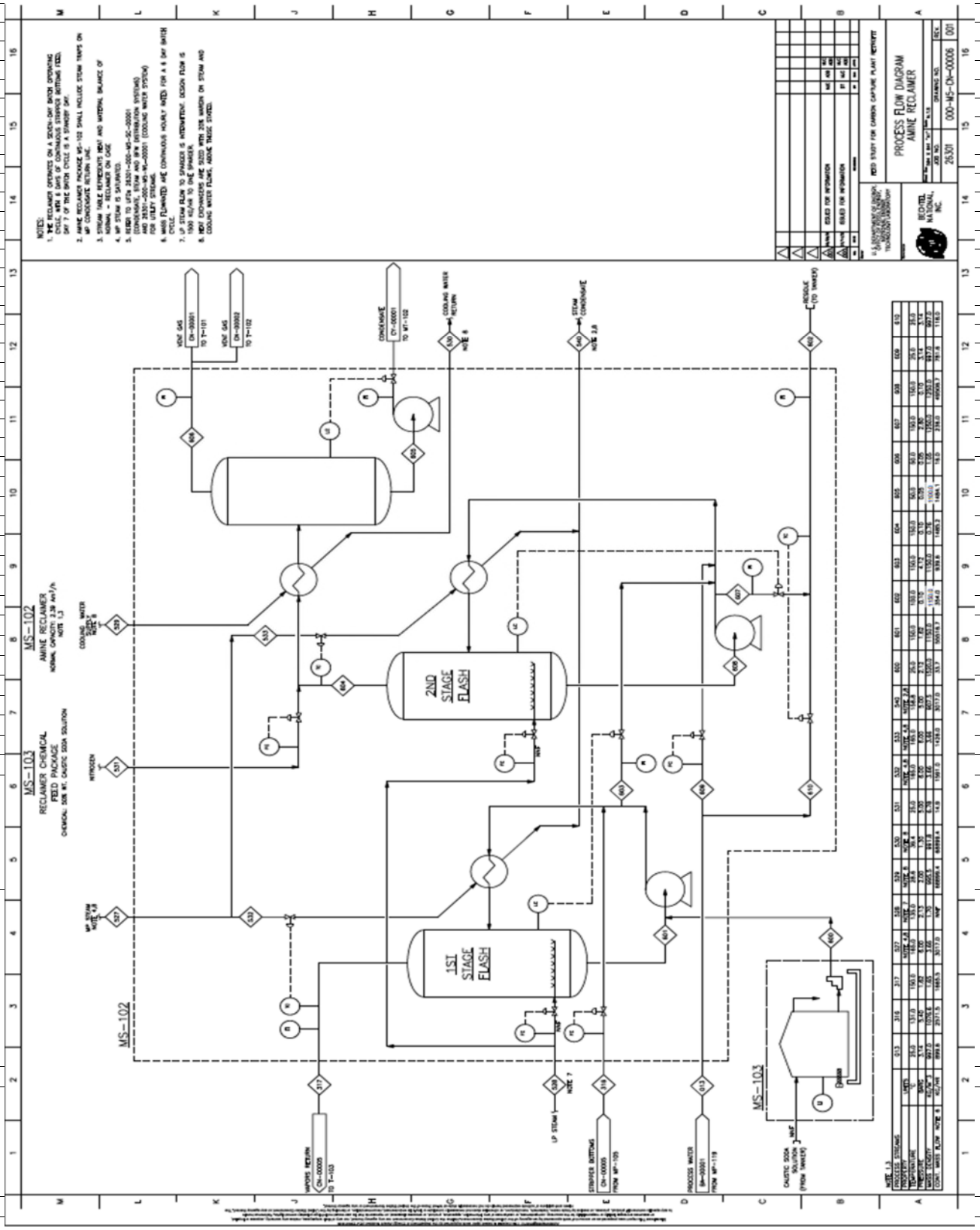

BECHTEL		JOB No.	26301
		Process Datasheet No.	Rev.
	Package Data Sheet - Amine Reclaimer	Bechtel: 26301-000-M5D-CN-00054 Owner: NOT USED	1
		SHEET 9 OF 9	

CLIENT	:	**U. S. Department of Energy, Office of Fossil Energy, National Energy Technology Laboratory**
PROJECT TITLE	:	**FEED Study for Carbon Capture Plant Retrofit**
JOB NUMBER	:	**26301**
M.R. NUMBER	:	
EQUIPMENT NUMBER	:	ME-111 A-D
EQUIPMENT TITLE	:	OVERHEAD STRIPPER CONDENSER
SERIAL NUMBER	:	
CRITICALITY RATING	:	

COMMENTS:

A. Vendor to add all missing data.

B. Maximum number of condensers is 4 x 25%. Vendor to advise alternative configuration of less condensers, where beneficial.

Acknowledgment: *This material is based upon work supported by the Department of Energy Award Number DE-FE0031848.*

Disclaimer: *This report was prepared as an account of work sponsored by an agency of the United States Government. Neither the United States Government nor any agency thereof, nor any of their employees, makes any warranty, express or implied, or assumes any legal liability or responsibility for the accuracy, completeness, or usefulness of any information, apparatus, product, or process disclosed, or represents that its use would not infringe privately owned rights. Reference herein to any specific commercial product, process, or service by trade name, trademark, manufacturer, or otherwise does not necessarily constitute or imply its endorsement, recommendation, or favoring by the United States Government or any agency thereof. The views and opinions of authors expressed herein do not necessarily state or reflect those of the United States Government or any agency thereof.*

REV	DATE	DESCRIPTION	BY	CHKD	APPD		
0	07-Aug-20	ISSUED FOR INFORMATION	MJC	DT	MJC/ADB		

BECHTEL			JOB No	**26301**
			DATA SHEET No.	REV
		Heat Exchanger (Plate) Data Sheet - Overhead Stripper Condenser	Bechtel: 26301-000-M5D-CN-00055 Owner: NOT USED	0
			SHEET 1 OF 4	

Applicable To: ☐ Proposal ☐ Purchase ☐ As Built ☐ ASME ☐ API ☐ Other _____

Manufacturer _____ Model _____ Serial No. _____

GENERAL DATA

Stream Number			1		2		3		4	
Stream Name			STRIPPER OVERHEADS (Note 3, 5)		COOLING WATER (Note 4)					
Fluid Quantity			IN	OUT	IN	OUT	IN	OUT	IN	OUT
Vapor		kg/h	213,217	132,035	-	-				
Liquid		kg/h	-	81,182	-	-				
Steam		kg/h	-	-	-	-				
Water		kg/h	-	-	4,636,921	4,636,921				
Non-Condensable		kg/h	-	-	-	-				
Temperature		°C	109.3	48.9	28.6	39.4				
Vapor			-	-	-	-				
Density		kg/m³	2.0	3.414	-	-				
Viscosity		Pa.s	0.000017	0.0000162	-	-				
Thermal Conductivity		W/(m-K)	0.025	0.0185	-	-				
Specific Heat		kJ/(kg-K)	1.329	0.902	-	-				
Molecular Weight			28.050	42.555	-	-				
Liquid			-	-	-	-				
Density		kg/m³	-	988.4	995.5	991.8				
Viscosity		Pa.s	-	0.000569	0.000845	0.000679				
Thermal Conductivity		W/(m-K)	-	0.634	0.611	0.625				
Specific Heat		kJ/(kg-K)	-	4.172	4.181	4.177				
Pressure		kPag	127	113	200	130				
Velocity		m/s								
Latent Heat		kj/kg								
Pressure Drop	Allow.	kPa	14		70					
Pressure Drop	Calc.	kPa								
Fouling Factor		m²-°C/W	(Note 1)		(Note 1)					
Number of Passes										
Heat Exchanged		kW	**57,945**		**57,945**					
MTD		°C								
Transfer Rate	Clean	kW/(m²-K)								
Transfer Rate	Service	kW/(m²-K)								

CONSTRUCTION

Number of Plate Heat Exchanger Units			**4**							
Number of Cores per Unit										
Core Width		mm								
Core height		mm								
Core Length		mm								
Parting Sheet Thickness		mm								
Outside Sheet Thickness		mm								
Number of Dummy Layers										
Number of Passages										
Passage Width (Effective)		mm								
Passage Length (Effective)		mm								
Fin Type										
Fin Height x Thickness		mm								
Number of Fins per Inch										
Surface Area (Effective)		m²								
Distributor										
Nozzles.			IN	OUT	IN	OUT	IN	OUT	IN	OUT
Rating										
Size		mm								
Number										
Design Pressure		kPag	345 / FV		850 / FV					
Test Pressure		°C								
Design Temperature	Max	°C	177		109					
	Min	°C	-17		-17					
Design Code										
Manufacturing Standards										
Weights	Operating									
	Full of water									

- DESIGN - MATERIALS - CONSTRUCTION -

Stream Number		1	2	3	4
Stream Name		STRIPPER OVERHEADS	COOLING WATER		
Dimensions					
Width	mm				
Depth	mm				
Height	mm				
Material - (Note 2, 4, 5)		TITANIUM	TITANIUM		
Structural Design Code					
Wind Load Design Code					
Seismic Zone					
Insulation Filling					

DESIGN DATA

	Temperature °C	Pressure kPaA	Enthalpy kJ/kg	Vapor Fraction Mol %	Vapor Fraction Vol %	Heat Duty kW
1	109.13	212.8		100.00	100.00	0
2	107.47	212.8		100.00	100.00	-130
3	105.88	212.8		93.50	99.99	-5,795
4	104.25	212.8		86.86	99.98	-11,589
5	102.29	212.8		80.29	99.97	-17,384
6	99.87	212.8		73.79	99.95	-23,178
7	96.81	212.8		67.40	99.94	-28,973
8	92.82	212.8		61.18	99.92	-34,767
9	87.40	212.8		55.19	99.89	-40,562
10	79.69	212.8		49.59	99.86	-46,356
11	67.99	212.8		44.63	99.83	-52,151
12	48.89	212.8		40.82	99.79	-57,945

HEAT RELEASE CURVE - STREAM 1 @ 213 kPaA (Condenser Outlet) - NOTE 3

	Temperature °C	Pressure kPaA	Enthalpy kJ/kg	Vapor Fraction Mol %	Vapor Fraction Vol %	Heat Duty kW
1	109.30	226.5		100.00	100.00	0
2	107.66	226.5		93.32	99.99	-5,808
3	106.00	226.5		86.66	99.98	-11,616
4	104.00	226.5		80.06	99.97	-17,424
5	101.52	226.5		73.54	99.95	-23,232
6	98.39	226.5		67.14	99.93	-29,040
7	94.28	226.5		60.90	99.91	-34,848
8	88.71	226.5		54.91	99.88	-40,656
9	80.76	226.5		49.32	99.85	-46,464
10	68.66	226.5		44.40	99.81	-52,272
11	48.89	226.5		40.67	99.77	-58,080

HEAT RELEASE CURVE - STREAM 1 @ 227 kPaA (Condenser Inlet) - NOTE 3

NOTES:

1. Vendor to advise margin to account for fouling in stripper overheads and cooling water service (minimum 10%).
2. Vendor to confirm material selection based on own product experience in stripper overheads and cooling water service.
3. 5% margin shall be added to the mass flowrate and duty.
4. Cooling Water quality is listed below;

Calcium	672	mg/l as Ca
Magnesium	248	mg/l as Mg
Total Hardness	2712	mg/l as $CaCO_3$
Sodium	1512	mg/l as Na
Potassium	48	mg/l as K
Iron, dissolved	0.16	mg/l as Fe
Iron, total	0.16	mg/l as Fe
Manganese, dissolved	0.1	mg/l as Mn
Manganese, total	0.1	mg/l as Mn
Barium	1.04	mg/l as Ba
Strontium	8.2	mg/l as Sr
Sulfates	2421	mg/l as SO_4
Chlorides	2216	mg/l as Cl
Fluorides	2.2	mg/l as F
Nitrates	< 5	mg/l as NO_3
Nitrites	< 0.1	mg/l as NO_2
Phosphorus	0.5	mg/l as P
P Alkalinity	< 5	mg/l as $CaCO_3$
M Alkalinity	172	mg/l as $CaCO_3$
Silica, dissolved	25	mg/l as SiO_2
Silica, total	25	mg/l as SiO_2
pH	7.5 to 8.0	(standard units)
Conductivity	13040	µS/cm at 25 °C
Total Dissolved Solids (TDS)	8350	mg/l
Total Suspended Solids (TSS)	50	mg/l

5. Stripper Overheads composition is 39%wt Water and 61%wt Carbon Dioxide with trace MEA(213ppmwt), oxygen(32ppmwt), nitrogen(86ppmwt), argon(3ppmwt), ammonia (19ppmwet).

CLIENT	:	**U. S. Department of Energy, Office of Fossil Energy, National Energy Technology Laboratory**
PROJECT TITLE	:	**FEED Study for Carbon Capture Plant Retrofit**
JOB NUMBER	:	**26301**
M.R. NUMBER	:	
EQUIPMENT NUMBER	:	MT-101, MT-102, MT-104, MT105
EQUIPMENT TITLE	:	PROCESS TANKS as named below
SERIAL NUMBER	:	
CRITICALITY RATING	:	

COMMENTS:

1. Tank equipment titles are;
   MT-101, Rich Amine Storage Tank
   MT-102, Lean Amine Solvent Storage Tank
   MT-104, Process Water Surge Tank
   MT-105, Caustic Soda Storage Tank

2. Four (4) tanks are required.

3. Large tanks (MT-101, MT-102) are to follow API 650. Small tanks (MT-104, MT-1
   Small tanks (MT-104, MT-105) are to follow API 12D, 12F or 12P.

4. Large tanks in Amine service (MT-101 & MT-102) shall be Stainless Steel.
   Small tanks containing Amine (MT-104) shall be Fibreglass Reinforced Plastic
   or Stainless Steel. Vendor to propose MOC for Caustic Soda service (MT-105)

Acknowledgment: *This material is based upon work supported by the Department of Energy Award Number DE-FE0031848.*

Disclaimer: *This report was prepared as an account of work sponsored by an agency of the United States Government. Neither the United States Government nor any agency thereof, nor any of their employees, makes any warranty, express or implied, or assumes any legal liability or responsibility for the accuracy, completeness, or usefulness of any information, apparatus, product, or process disclosed, or represents that its use would not infringe privately owned rights. Reference herein to any specific commercial product, process, or service by trade name, trademark, manufacturer, or otherwise does not necessarily constitute or imply its endorsement, recommendation, or favoring by the United States Government or any agency thereof. The views and opinions of authors expressed herein do not necessarily state or reflect those of the United States Government or any agency thereof.*

REV	DATE	DESCRIPTION	BY	CHKD	APPD		
0	27-Aug-20	ISSUED FOR INFORMATION	MJC	ADB	MJC/ADB		

BECHTEL

Process Data Sheet -Tanks

JOB No	**26301**	
DATA SHEET No.		REV
Bechtel: 26301-000-M5D-CY-00001 Owner: NOT USED		0
SHEET	1 OF 4	

REVISION

CLIENT & LOCATION :	U. S. Department of Energy, Office of Fossil Energy, National Energy Technology Laboratory	EQUIPMENT No :	MT-101, MT-102, MT-104, MT105
PROJECT :	**FEED Study for Carbon Capture Plant Retrofit**	UNIT :	

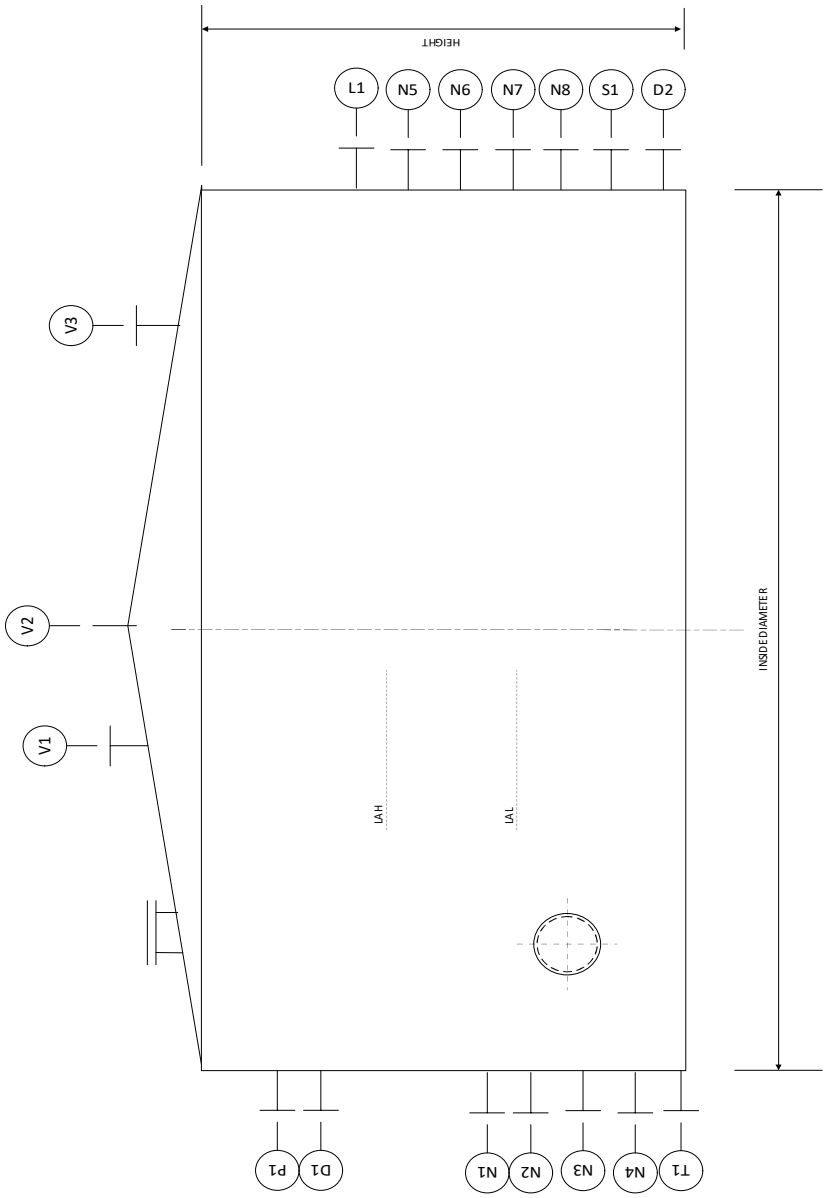

NOTES

1. Tank dimensions and capacity to be confirmed by vendor to allow for bottom ullage of 3m and top ullage of 0.3m. (Bottom ullage for MT-105 = 0.6m)
2. Tank sizing data as follows;

	MT-101	MT-102	MT-104	MT-105
Working Volume (m^3)	1265	1265	77	10
Specific Gravity	*1.10 - 1.16*	*1.10 - 1.16*	*0.99*	*1.53*
Max. Filling Rate (m3/h)	427	427	77	16
Max. Emptying Rate (m3/h)	70	70	95	0.07

3. Blanketing applies to MT-101 and MT-102 only.
4. Minimum nozzle requirements and size for process requirements stated. Code requirements, where more stringent, shall apply.

BECHTEL	**PROCESS DATA SHEET**	JOB NO.:	26301
		DATA SHEET No.	REV.
	TANKS	Bechtel: 26301-000-M5D-CY-00001 Owner: NOT USED	0
		SHEET 2 OF 4	

CLIENT & LOCATION :	U. S. Department of Energy, Office of Fossil Energy, National Energy Technology Laboratory		EQUIPMENT No :	MT-101, MT-102, MT-104, MT105
PROJECT :	**FEED Study for Carbon Capture Plant Retrofit**		UNIT :	

PROCESS DATA

SIZE, DIAMETER X HEIGHT	By Vendor (Note 1)		MAX. FILLING RATE	Note 2	
CAPACITY	By Vendor (Note 1)		MAX. EMPTYING RATE	Note 2	
TOTAL NET WORKING CAPACITY	Note 2	m^3	NORMAL STORAGE TEMPERATURE	48	°C
SPECIFIC GRAVITY	Note 2		STORAGE TEMP.: MIN. 5 MAX.	50	°C
DRAW-OFF SUMP REQUIRED?	~~YES /~~ NO		**GAS BLANKET (Note 3)** TYPE:	Nitrogen	
WATER DRAW CONNECTION REQUIRED?	~~YES /~~ NO		OPERATING PRESSURE: MIN. 0.005 MAX.	0.01	barg
ROOF TYPE	FIXED		CONTAMINANTS:		
BOTTOM TYPE	OUTWARD SLOPED OR FLAT				

NOMINAL TANK DIMENSIONS mm - Note 1

	MT-101	MT-102	MT-104	MT-105		REMARKS
Diameter	12000	12000	4724	2413		Vendor to confirm to meet working volume requirement (Note 1, 2).
Height	16800	16800	9144	3048		Vendor to confirm to meet working volume requirement (Note 1, 2).

PROCESS NOZZLE SIZE mm(NS) - Note 4

NOZZLE	MT-101	MT-102	MT-104	MT-105	RATING	SERVICE
D1	100	100	Nil	Nil	150#	Overflow
D2	100	100	200	50	150#	Drain
N1	150	100	150	50	150#	Feed 1 Inlet
N2	200	50	Nil	Nil	150#	Feed 2 Inlet
N3	Nil	150	Nil	Nil	150#	Feed 3 Inlet
N4	Nil	200	Nil	Nil	150#	Feed 4 Inlet
N5	150	150	150	50	150#	Pump 1 Outlet
N6	75	75	75	Nil	150#	Pump 1 Spillback Return
N7	Nil	Nil	100	Nil	150#	Pump 2 Outlet
N8	Nil	Nil	50	Nil	150#	Pump 2 Spillback Return
V1	50	50	Nil	Nil	150#	Purge Inlet
V2	100	100	Nil	Nil	150#	PSV Inlet
V3	100	100	150	50	150#	Vent Outlet

INSTRUMENT / MECHANICAL NOZZLE SIZE mm(NS) - Note 4

NOZZLE	MT-101	MT-102	MT-104	MT-105	RATING	SERVICE
L1	50	50	50	50	300#	Level
P1	50	50	Nil	Nil	300#	Pressure
S1	50	50	50	Nil	300#	Sample
T1	50	50	50	50	300#	Temperature

DESIGN AND MAINTENANCE CONSIDERATIONS

IS VESSEL IN LETHAL OR OTHER SPECIAL SERVICE?	YES / ~~NO~~	DESCRIBE:	AMINE (MT-101, MT-102), CAUSTIC SODA (MT-105)	
PROCESS CONTAMINANTS:	Carbon Dioxide (MT-101, MT-102, MT-104), AMINE (MT-104)			
TYPE OF SAFETY PROTECTION:	PER API 2000			
			MT-101 & MT-102	MT-104 & MT-105
DESIGN INTERNAL PRES.SURE @ 80°C		barg	0.172	0.015
DESIGN EXTERNAL PRES.SURE @ 80°C		barg	-0.00245	-0.005
MINIMUM EXPECTED OPERATING PRESSURE (barg) =			MINIMUM EXPECTED OPERATING TEMPERATURE (°C) =	
WILL UNIT BE SUBJECTED TO THERMAL CYCLING?	*YES / NO*	DESCRIBE:		
WILL UNIT BE SUBJECTED TO PRESSURE CYCLING?	*YES / NO*	DESCRIBE:		
DESCRIBE UPSET, START-UP, ALTERNATE, AND FUTURE OPERATING CONDITIONS (IF APPLICABLE):				
WILL SERVICE AUTO-REFRIGERATE?	*YES / NO*	DESCRIBE:		
WILL STEAM OUT BE UTILIZED?	*YES / NO*	DESCRIBE:		
METHOD OF CLEANING:		FREQUENCY OF CLEANING:		

CLIENT & LOCATION	Office of Fossil Energy, National Energy Technology Laboratory	EQUIPMENT No. MT-101, MT-102, MT-104, MT105
PROJECT :	**FEED Study for Carbon Capture Plant Retrofit**	UNIT :

GENERAL

INSULATION:	FIRE PROOFING:
PAINTING:	BOTTOM PLATE COATING:
WIND GIRDERS:	TANK STRAPPING:
FOUNDATION:	BEARING PLATES:
CORROSION ALLOWANCE:	DESIGN METAL TEMP. MIN. MAX. F
SPECIFICATIONS:	

SHELL APPURTENANCES

SUCTION NOZZLE: W/1" COUPLING? *YES /NO*		FILL NOZZLE: W/1" COUPLING? *YES /NO*	
STEAM NOZZLE - DOUBLE FLANGED	CONDENSATE NOZZLE - DOUBLE FLANGED	ROOF DRAIN NOZZLE - DOUBLE FLANGED	
FOAM CHAMBER	FOAM TROUGHS	MANHOLES *20" / 24" DIA.*	
MIXER NOZZLE W/BLIND FLANGE (MH) ? *YES / NO*		FLUSH TYPE CLEANOUT, 3' X 4'	
TEMPERATURE GAUGE CONNECTION - 1" COUPLING		PRESSURE GAUGE CONNECTION	
TEMPERATURE CONTROLLER CONNECTION - 1" COUPLING		SUCTION NOZZLE - DOUBLE FLANGED W/1" COUPLING	
SAMPLE CONNECTION - 1" COUPLING			
SPECIAL CONNECTIONS, LEVEL GAUGE CONNECTIONS *YES / NO*			
HIGH & LOW LEVEL ALARMS *YES / NO*		HIGH & LOW PRESSURE ALARMS *YES / NO*	

ROOF APPURTENANCES

VENT NOZZLE	RIM VENTS	ROOF DRAIN *FLEX / PIPE*	GAUGE HATCH NOZZLE
BLANKET GAS INLET - 2" FLANGE	GAS BLANKET PC 2" FLANGE NOZZLE	AUTOMATIC BLEEDER VENT	
MANHOLE - 20"	MANHOLE - COMB. EMER. RELIEF	PONTOON MANHOLE - 20"	
AUTOMATIC GAUGE FLOAT WELL & COVER		AUTOMATIC GAUGE INSPECTION OPENING & COVER	
LEVEL GAUGE CONNECTIONS	AVERAGING TEMP. BULB CONNECTION	AUTOMATIC GAUGE FLOAT STILLING WELL	

MISCELLANEOUS APPURTENANCES

CIRCUMFERENTIAL STAIRS	LADDER W/CAGE	ROLLING LADDER W/SELF-LEVEL TRDS.	
PLATFORM	GROUNDING LUGS	MIXER SUPPORT LUGS	
LEVEL GAUGE SUPPORTS	FOAM LINE SUPPORTS	INSULATION SUPPORTS	
CATHODIC PROTECTION			
AUTOMATIC LEVEL GAUGE *LOCAL / REMOTE / REMOTE PRESS.*		TARGET LEVEL GAUGE WITH *ALARM / LIQUID SEAL*	
TEMPERATURE GAUGE	FOAM GENERATOR	PRESSURE VACUUM RELIEF VALVE	
OPEN VENT WITH RETURN *BEND / MUSHROOM*		INSULATION	SAMPLE COOLER
TANK HEATER INSTALL BY:		HEATER MAINIFOLDS INSTALL BY:	
CENTER PIN FOR PAINTER'S TROLLEY			

ADDITIONAL REMARKS

BECHTEL	**PROCESS DATA SHEET** **TANKS**	JOB NO.: 26301 DATA SHEET No. / REV. Bechtel: 26301-000-M5D-CY-00001 / 0 Owner: NOT USED SHEET 4 OF 4

CLIENT	:	**U. S. Department of Energy, Office of Fossil Energy, National Energy Technology Laboratory**
PROJECT TITLE	:	**FEED Study for Carbon Capture Plant Retrofit**
JOB NUMBER	:	**26301**
M.R. NUMBER	:	
EQUIPMENT NUMBER	:	MC-103 A/B/C
EQUIPMENT TITLE	:	CO_2 COMPRESSOR
SERIAL NUMBER	:	
CRITICALITY RATING	:	

COMMENTS:

A. Vendor to add all missing data.

Acknowledgment: *This material is based upon work supported by the Department of Energy Award Number DE-FE0031848.*

Disclaimer: *This report was prepared as an account of work sponsored by an agency of the United States Government. Neither the United States Government nor any agency thereof, nor any of their employees, makes any warranty, express or implied, or assumes any legal liability or responsibility for the accuracy, completeness, or usefulness of any information, apparatus, product, or process disclosed, or represents that its use would not infringe privately owned rights. Reference herein to any specific commercial product, process, or service by trade name, trademark, manufacturer, or otherwise does not necessarily constitute or imply its endorsement, recommendation, or favoring by the United States Government or any agency thereof. The views and opinions of authors expressed herein do not necessarily state or reflect those of the United States Government or any agency thereof.*

REV	DATE	DESCRIPTION	BY	CHKD	APPD		
0	06-Jul-20	ISSUED FOR INFORMATION	AAR	DT	MJC/ADB		

BECHTEL			JOB No	**26301**
			DATA SHEET No.	REV
		Process Data Sheet - CO_2 Compressor	Bechtel: 26301-000-M5D-QG-00011 Owner: NOT USED	0
			SHEET 1 OF 4	

DESIGN DATA

GAS CIRCULATED :	CO_2					
SERVICE (LETHAL / CORROSIVE / EROSIVE) :	N/A					
CONTAMINANTS : SOLIDS (e.g. TYPE, SIZE, DISTRIBUTION, DESCRIPTION) :	NONE					
OPERATION : CONTINUOUS			No. OF STARTS PER HOUR :	N/A		
PRELIM. COMPRESSOR SELECTION: (Note 1, 6)			DRIVER TYPE :	MOTOR+GEAR		

FLUID PROPERTIES (Note 2)

DENSITY @ PT	kg/m^3	3.36	MOLECULAR WEIGHT		42.54
SPECIFIC GRAVITY (S.G.) @ PT		1.469	Cp/Cv VALUE @ PT		1.280
COMPRESSIBILITY FACTOR		0.991			

FLOWRATE			TEMPERATURE		
NORMAL FLOW	kg/hr	132,065	NORMAL FLUID TEMPERATURE	°C	48.7
NORMAL FLOW	Nm^3/hr	69,579	DESIGN TEMPERATURE	°C	205
DESIGN FLOW	kg/hr	145,271	MAX OPERATING TEMPERATURE	°C	177
DESIGN FLOW	Nm^3/hr	76,537	MIN OPERATING TEMPERATURE	°C	20

HYDRAULIC CALCULATION (Note 3)

SUCTION CONDITION			DISCHARGE CONDITION (Note 4)		
DESIGN FLOWRATE	Nm^3/hr	76,537	DESIGN FLOWRATE	Nm^3/hr	76,537
ORIGIN PRESSURE	kPa A	209	DESTINATION PRESSURE	kPa A	635
- LINE LOSS	kPa	10	- LINE LOSS	kPa	10
- P CONTROL VALVES - DAMPERS	kPa	20	- P CONTROL VALVES	kPa	
- P ORIFICES	kPa		- P ORIFICES	kPa	
- P EXCHANGERS	kPa		- P EXCHANGERS	kPa	62
- P FURNACES	kPa		- P FURNACES	kPa	
- P FILTERS	kPa		- P FILTERS	kPa	
- P SILENCERS	kPa		- P SILENCERS	kPa	
- P PULSATION BOTTLES	kPa		- P PULSATION BOTTLES	kPa	
- P OTHERS	kPa		- P OTHERS	kPa	
- P CONTINGENCY	kPa	10	- P CONTINGENCY	kPa	10
= COMPR. SUCTION PRESSURE	kPa A	**169**	= COMPR. DISCHARGE PRESSURE	kPa A	**717**
COMPR. FACTOR @ SUCTION			COMPR. FACTOR @ DISCHARGE		

DIFFERENTIAL PRESSURE			GAS COMPOSITION : MOL %				
DISCHARGE PRESSURE	kPa A	716.8	Oxygen	0.0068	MEA	Trace	
- SUCTION PRESSURE	kPa A	169.3	Nitrogen	0.0212	Argon	0.0005	
TOTAL COMPR. DIFFERENTIAL PRESS	kPa A	547.5	Water	5.6263	NO	Trace	
COMPRESSION RATIO (Pd/Ps)		4.234	Carbon Dioxide	94.3453	NO2	Trace	
COMPR. SUCTION TEMP	°C	48.7	Sulfur Dioxide	Trace	NH3	Trace	
COMPR. DISCHARGE TEMP.	°C	176.7					
COMPR. POWER (Note 5)	kW	4,836					

NOTES

1. TO BE CONFIRMED BY FINAL MECHANICAL DESIGN
2. FLUID PROPERTIES LISTED AT SUCTION CONDITIONS
3. HYDRAULIC CALCULATION VALUES ARE PRELIMINARY AND SHOULD BE CONFIRMED WHEN FINAL SYSTEM DETAILS ARE KNOWN.
4. COMPRESSOR DISCHARGE CONDITIONS TAKEN AT CO_2 COMPRESSOR 1ST STAGE INTERSTAGE KNOCK-OUT DRUM, MV-104.
5. ESTIMATED VALUE FROM SIMULATION, INCLUDES 10% MARGIN.
6. THIS SHEET IS FOR 1ST STAGE OF CO_2 COMPRESSOR, MC-103 A

DESIGN DATA

GAS CIRCULATED :	CO_2				
SERVICE (LETHAL / CORROSIVE / EROSIVE) :	N/A				
CONTAMINANTS : SOLIDS (e.g. TYPE, SIZE, DISTRIBUTION, DESCRIPTION) :	NONE				
OPERATION : CONTINUOUS		No. OF STARTS PER HOUR :	N/A		
PRELIM. COMPRESSOR SELECTION: (Note 1, 7)		DRIVER TYPE :	MOTOR+GEAR		

FLUID PROPERTIES (Note 2)

DENSITY @ PT	kg/m^3	11.05	MOLECULAR WEIGHT		43.71
SPECIFIC GRAVITY (S.G.) @ PT		1.509	Cp/Cv VALUE @ PT		1.283
COMPRESSIBILITY FACTOR		0.969			
FLOWRATE			TEMPERATURE		
NORMAL FLOW	kg/hr	129,514	NORMAL FLUID TEMPERATURE	°C	38.5
NORMAL FLOW	Nm^3/hr	66,412	DESIGN TEMPERATURE	°C	205
DESIGN FLOW	kg/hr	142,466	MAX OPERATING TEMPERATURE	°C	177
DESIGN FLOW	Nm^3/hr	73,053	MIN OPERATING TEMPERATURE	°C	20

HYDRAULIC CALCULATION (Note 3)

SUCTION CONDITION			DISCHARGE CONDITION (Note 4)		
DESIGN FLOWRATE	Nm^3/hr	73,053	DESIGN FLOWRATE	Nm^3/hr	73,053
ORIGIN PRESSURE	kPa A	635	DESTINATION PRESSURE	kPa A	2,276
- LINE LOSS	kPa	10	- LINE LOSS	kPa	10
- P CONTROL VALVES - DAMPERS	kPa		- P CONTROL VALVES	kPa	
- P ORIFICES	kPa		- P ORIFICES	kPa	
- P EXCHANGERS	kPa		- P EXCHANGERS	kPa	62
- P FURNACES	kPa		- P FURNACES	kPa	
- P FILTERS	kPa		- P FILTERS	kPa	
- P SILENCERS	kPa		- P SILENCERS	kPa	
- P PULSATION BOTTLES	kPa		- P PULSATION BOTTLES	kPa	
- P OTHERS	kPa		- P OTHERS (Note 6)	kPa	100
- P CONTINGENCY	kPa	10	- P CONTINGENCY	kPa	10
= COMPR. SUCTION PRESSURE	kPa A	**615**	= COMPR. DISCHARGE PRESSURE	kPa A	**2,458**
COMPR. FACTOR @ SUCTION			COMPR. FACTOR @ DISCHARGE		

DIFFERENTIAL PRESSURE			GAS COMPOSITION : MOL %			
DISCHARGE PRESSURE	kPa A	2,458.4	Oxygen	0.0071	MEA	Trace
- SUCTION PRESSURE	kPa A	614.8	Nitrogen	0.0222	Argon	0.0005
TOTAL COMPR. DIFFERENTIAL PRESS	kPa A	1,843.6	Water	1.1321	NO	Trace
COMPRESSION RATIO (Pd/Ps)		3.999	Carbon Dioxide	98.8381	NO2	Trace
COMPR. SUCTION TEMP	°C	38.5	Sulfur Dioxide	Trace	NH3	Trace
COMPR. DISCHARGE TEMP.	°C	176.7				
COMPR. POWER (Note 5)	kW	4,847				

NOTES

1. TO BE CONFIRMED BY FINAL MECHANICAL DESIGN
2. FLUID PROPERTIES LISTED AT SUCTION CONDITIONS
3. HYDRAULIC CALCULATION VALUES ARE PRELIMINARY AND SHOULD BE CONFIRMED WHEN FINAL SYSTEM DETAILS ARE KNOWN.
4. COMPRESSOR DISCHARGE CONDITIONS TAKEN AT CO_2 COMPRESSOR 2ND STAGE INTERSTAGE KNOCK-OUT DRUM, MV-105.
5. ESTIMATED VALUE FROM SIMULATION, INCLUDES 10% MARGIN.
6. MAXIMUM DRYING PACKAGE (MS-104) PRESSURE DROP IS 100 kPa
7. THIS SHEET IS FOR 2ND STAGE OF CO_2 COMPRESSOR, MC-103 B

DESIGN DATA

GAS CIRCULATED :	CO_2					
SERVICE (LETHAL / CORROSIVE / EROSIVE) :	N/A					
CONTAMINANTS : SOLIDS (e.g. TYPE, SIZE, DISTRIBUTION, DESCRIPTION) :	NONE					
OPERATION : CONTINUOUS			No. OF STARTS PER HOUR :	N/A		
PRELIM. COMPRESSOR SELECTION: (Note 1, 6)			DRIVER TYPE :	MOTOR+GEAR		

FLUID PROPERTIES (Note 2)

DENSITY @ PT	kg/m^3	43.65	MOLECULAR WEIGHT			44.00
SPECIFIC GRAVITY (S.G.) @ PT		1.519	Cp/Cv	VALUE @ PT		1.283
COMPRESSIBILITY FACTOR		0.8854				
FLOWRATE			TEMPERATURE			
NORMAL FLOW	kg/hr	128,913	NORMAL FLUID TEMPERATURE		°C	39
NORMAL FLOW	Nm^3/hr	65,670	DESIGN TEMPERATURE		°C	205
DESIGN FLOW	kg/hr	141,804	MAX OPERATING TEMPERATURE		°C	177
DESIGN FLOW	Nm^3/hr	72,237	MIN OPERATING TEMPERATURE		°C	20

HYDRAULIC CALCULATION (Note 3)

SUCTION CONDITION			DISCHARGE CONDITION (Note 4)		
DESIGN FLOWRATE	Nm^3/hr	72,237	DESIGN FLOWRATE	Nm^3/hr	72,237
ORIGIN PRESSURE	kPa A	2,276	DESTINATION PRESSURE	kPa A	8,289
- LINE LOSS	kPa	10	- LINE LOSS	kPa	10
- P CONTROL VALVES - DAMPERS	kPa		- P CONTROL VALVES	kPa	
- P ORIFICES	kPa		- P ORIFICES	kPa	
- P EXCHANGERS	kPa		- P EXCHANGERS	kPa	62
- P FURNACES	kPa		- P FURNACES	kPa	
- P FILTERS	kPa		- P FILTERS	kPa	
- P SILENCERS	kPa		- P SILENCERS	kPa	
- P PULSATION BOTTLES	kPa		- P PULSATION BOTTLES	kPa	
- P OTHERS	kPa		- P OTHERS	kPa	
- P CONTINGENCY	kPa	10	- P CONTINGENCY	kPa	10
= COMPR. SUCTION PRESSURE	kPa A	**2,256**	= COMPR. DISCHARGE PRESSURE	kPa A	**8,371**
COMPR. FACTOR @ SUCTION			COMPR. FACTOR @ DISCHARGE		

DIFFERENTIAL PRESSURE			GAS COMPOSITION : MOL %			
DISCHARGE PRESSURE	kPa A	8,371.2	Oxygen	0.0072	MEA	Trace
- SUCTION PRESSURE	kPa A	2,256.4	Nitrogen	0.0224	Argon	0.0005
TOTAL COMPR. DIFFERENTIAL PRESS	kPa A	6,114.8	Water	0.0110	NO	Trace
COMPRESSION RATIO (Pd/Ps)		3.710	Carbon Dioxide	99.9486	NO2	Trace
COMPR. SUCTION TEMP	°C	38.5	Sulfur Dioxide	Trace	NH3	Trace
COMPR. DISCHARGE TEMP.	°C	176.7				
COMPR. POWER (Note 5)	kW	4,334				

NOTES

1. TO BE CONFIRMED BY FINAL MECHANICAL DESIGN
2. FLUID PROPERTIES LISTED AT SUCTION CONDITIONS
3. HYDRAULIC CALCULATION VALUES ARE PRELIMINARY AND SHOULD BE CONFIRMED WHEN FINAL SYSTEM DETAILS ARE KNOWN.
4. COMPRESSOR DISCHARGE CONDITIONS TAKEN AT CO_2 SURGE DRUM, MV-106.
5. ESTIMATED VALUE FROM SIMULATION, INCLUDES 10% MARGIN.
6. THIS SHEET IS FOR 3RD STAGE OF CO_2 COMPRESSOR, MC-103 C

CLIENT	:	**U. S. Department of Energy, Office of Fossil Energy, National Energy Technology Laboratory**
PROJECT TITLE	:	**FEED Study for Carbon Capture Plant Retrofit**
JOB NUMBER	:	**26301**
M.R. NUMBER	:	
EQUIPMENT NUMBER	:	MS-104
EQUIPMENT TITLE	:	CO_2 DRYING PACKAGE
SERIAL NUMBER	:	
CRITICALITY RATING	:	

COMMENTS:

* VENDOR TO COMPLETE DATA MARKED WITH ASTERISK.

Acknowledgment: *This material is based upon work supported by the Department of Energy Award Number DE-FE0031848.*

Disclaimer: *This report was prepared as an account of work sponsored by an agency of the United States Government. Neither the United States Government nor any agency thereof, nor any of their employees, makes any warranty, express or implied, or assumes any legal liability or responsibility for the accuracy, completeness, or usefulness of any information, apparatus, product, or process disclosed, or represents that its use would not infringe privately owned rights. Reference herein to any specific commercial product, process, or service by trade name, trademark, manufacturer, or otherwise does not necessarily constitute or imply its endorsement, recommendation, or favoring by the United States Government or any agency thereof. The views and opinions of authors expressed herein do not necessarily state or reflect those of the United States Government or any agency thereof.*

REV	DATE	DESCRIPTION	BY	CHKD	APPD		
0	06-Jul-20	ISSUED FOR INFORMATION	AAR	DT	MJC/ADB		

PROCESS STREAM INPUT 1				PROCESS STREAM OUTPUT 1			
Fluid / Gas Name:	**Inlet CO_2**			Fluid / Gas Name:	**Outlet CO_2**		
Flowrate: Norm	(Note 5)	**69,649**	Std m^3/h	Flowrate: Norm		*	Std m^3/h
Flowrate: Norm	(Note 5)	**129,095**	kg/h	Flowrate: Norm		*	kg/h
Supply Conditions	Pres. kPa g	Temp.	°C	Supply Conditions	Pres. kPa g	Temp.	°C
Normal	2,211	39		Normal (Note 1)	2,111	39	
				PROCESS STREAM OUTPUT 2 (Note 1, 2, 3)			
				Fluid / Gas Name:	**Outlet Purge**		
				Flowrate: Norm		*	Std m^3/h
				Flowrate: Norm		*	kg/h
				Supply Conditions	Pres. kPa g	Temp.	°C
				Normal	MIN 150 (Note 2)	MAX 50 (Note 2)	

UTILITIES (Note 4)

INSTRUMENT AIR				**COOLING WATER**			
Instrument Air Consumption	*	m^3/h		Cooling Water Consumption	*	m^3/h	
Supply Conditions	Pres. kPa g	Temp.	°C	Supply Conditions		Temp.	°C
Minimum				Normal		28.6	
Normal	700	38		Design			
Maximum				Maximum Temperature Rise		10.8	
Design							
PLANT AIR				**ELECTRICITY**			
Plant air consumption	*	m^3/h		Motors	kW	System	
Supply Conditions	Pres. kPa g	Temp.	°C				
Minimum							
Normal	700	38					
Maximum							
Design							

Composition of Gas Entering Dryer:

Mole Fraction	**%**	
Oxygen	0.0072	
Nitrogen	0.0224	
Water	0.3638	(0.1493 % wt.)
Carbon Dioxide	99.6061	
Sulfur Dioxide	Trace	
MEA	Trace	
Argon	0.0005	
NO	Trace	
NO2	Trace	
NH3	0.06 ppm	
MW	43.91	

Product Specification:

WATER CONTENT TO BE LESS THAN 50 ppm wt. IN PRODUCT STREAM FROM DRYER

REGENERANT HEATING TO BE PROVIDED TO MINIMISE PURGE RATE.
VENDOR TO PROVIDE ELECTRICAL HEATING (Note 2,3,4)

TARGET PURGE RATE = 2% OF DRYER FEED FLOW

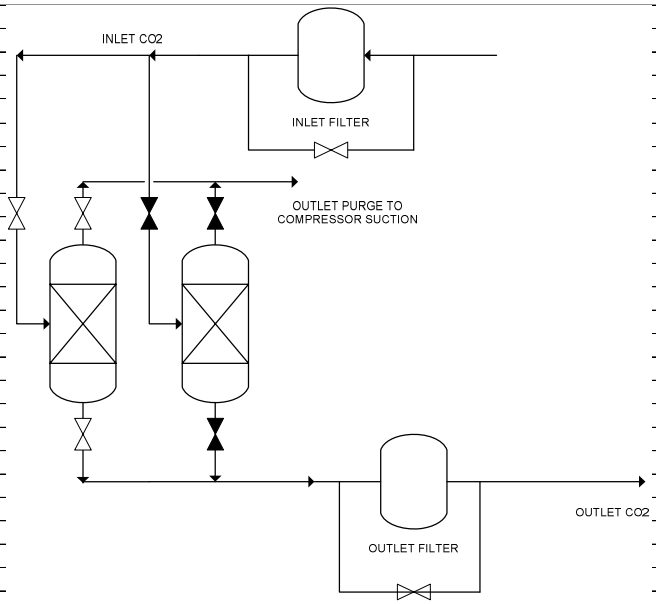

NOTES:

1. MAXIMUM ALLOWABLE PRESSURE DROP: 100 kPa. VENDOR TO CONFIRM ACTUAL PRESSURE DROP.
2. VENDOR TO ADVISE PURGE GAS OUTLET TEMPERATURE AND PRESSURE.
   PURGE GAS OUTLET TO EXCEED COMPRESSOR SUCTION PRESSURE AS SPECIFIED ON SHEET 2
3. VENDOR TO ADVISE PURGE GAS FLOW RATE
   FLOW RATE DOES NOT INCLUDE PURGE GAS RETURNED TO DRYER FEED AFTER COMPRESSION (BY OTHERS)
4. VENDOR TO ADVISE UTILITY CONSUMPTION RATE
5. DRYING PACKAGE SHOULD BE DESIGNED WITH 10% MARGIN OF NORMAL FLOWRATE.
6. DRYING PACKAGE ONE DRUM ON-LINE, ONE DRUM ON REGENERATION

TERMINAL CONNECTIONS

SERVICE:	SIZE	CODE	RATING	FACING	PACKAGING	PIPING SPEC
NITROGEN SUPPLY	50MIN		150#	RF		
INSTRUMENT AIR SUPPLY	50MIN		150#	RF		
PLANT AIR SUPPLY	50MIN		150#	RF		
LP STEAM	50MIN		150#	RF		
COOLING WATER	50MIN		150#	RF		
INLET CO_2	350NS		300#	RF		
OUTLET CO_2	350NS		300#	RF		

MATERIALS OF CONSTRUCTION

VENDOR TO ADVISE

CLIENT	:	**U. S. Department of Energy, Office of Fossil Energy, National Energy Technology Laboratory**
PROJECT TITLE	:	**FEED Study for Carbon Capture Plant Retrofit**
JOB NUMBER	:	**26301**
M.R. NUMBER	:	
EQUIPMENT NUMBER	:	MP-108 A/B
EQUIPMENT TITLE	:	CO2 PRODUCT SENDOUT PUMPS
SERIAL NUMBER	:	
CRITICALITY RATING	:	

COMMENTS:

A. Vendor to add all missing data.

B. 2 x 100% pumps to be provided to achieve the required design flowrate.

Acknowledgment: *This material is based upon work supported by the Department of Energy Award Number DE-FE0031848.*

Disclaimer: *This report was prepared as an account of work sponsored by an agency of the United States Government. Neither the United States Government nor any agency thereof, nor any of their employees, makes any warranty, express or implied, or assumes any legal liability or responsibility for the accuracy, completeness, or usefulness of any information, apparatus, product, or process disclosed, or represents that its use would not infringe privately owned rights. Reference herein to any specific commercial product, process, or service by trade name, trademark, manufacturer, or otherwise does not necessarily constitute or imply its endorsement, recommendation, or favoring by the United States Government or any agency thereof. The views and opinions of authors expressed herein do not necessarily state or reflect those of the United States Government or any agency thereof.*

REV	DATE	DESCRIPTION	BY	CHKD	APPD		
0	28-Jul-20	ISSUED FOR INFORMATION	MJC	DT	MJC/ADB		

BECHTEL			JOB No	**26301**
			DATA SHEET No.	REV
		Process Data Sheet - CO2 Product Sendout Pmps	Bechtel: 26301-000-M5D-QG-00022 Owner: NOT USED	0
			SHEET 1 OF 2	

DESIGN DATA

LIQUID CIRCULATED:	CO2				
SERVICE (LETHAL / CORROSIVE / EROSIVE):	N/A				
DISSOLVED CONTAMINANTS : GASES / SOLIDS (e.g. TYPE, SIZE, DISTRIBUTION, DESCRIPTION):			NONE		
OPERATION : CONTINUOUS (1 IN SERVICE, 1 SPARE)			No. OF STARTS PER HOUR :	N/A	
PRELIMINARY PUMP SELECTION :	(Note 3)		PUMP DRIVER TYPE :	ELECTRIC INDUCTION	

TEMPERATURE			LIQUID PROPERTIES		
NORMAL FLUID TEMPERATURE	°C	39	VAPOUR PRESSURE @ PT (Note 5)	kPaA	8289
MIN / MAX OPERATING TEMP	°C	20 / 50	DENSITY (ρ) @ PT	kg/m3	350.1
MIN / MAX DESIGN TEMPERATURE	**°C**	**-90 / 106**	VISCOSITY @ PT	Pa.s	2.73E-05
		FLOWRATE			
DESIGN FLOW @ PT	m³/hr	405	MIN FLOW @ PT (60% NORMAL)	m³/hr	221
NORMAL FLOW @ PT	m³/hr	368	NORMAL FLOW @ 15.6 °C	m³/hr	

PUMP CALCULATION (2)

SUCTION PRESSURE		DESIGN	DIFFERENTIAL PRESSURE		DESIGN
ORIGINAL PRESSURE	kPaA	8289	DISCHARGE PRESSURE	kPaA	16220
STATIC HEAD (ρ x 9.81 x h / 1000)	kPa	19	- SUCTION PRESSURE	kPaA	8303
- LOSS (LINE + OTHERS)	kPa	5	TOTAL PUMP DIFF. PRESSURE	kPa	7917
PUMP SUCTION PRESSURE	kPaA	8303	DIFF. HEAD (kPa x 1000 / ρ / 9.81)	m	2305

NET POSITIVE SUCTION HEAD		DESIGN	MAXIMUM SUCTION PRESSURE		
STATIC HEAD (Note 7)	m	5.5	VESSEL PSV SETTING	kPaA	11271
- LINE LOSS (kPa x 1000 / ρ / 9.81)	m	1.5	STATIC HEAD	kPa	19
+ (ORIG.P - VAP P) x 1000 / ρ / 9.81	m	0.0	NET	kPaA	11290
AVAILABLE NPSH	m	4.0			

DISCHARGE PRESSURE		DESIGN	MAXIMUM DISCHARGE PRESSURE		
DELIVERY PRESSURE	kPaA	15100	MAX SUCTION PRESSURE	kPaA	11290
+ STATIC HEAD	kPa		SHUT OFFΔP (1.25 x NORMAL ΔP)	kPa	9896
+ LINE LOSS (INSIDE B/L)	kPa	20	NET	kPaA	21186
+ P CONTROL VALVES (Note 6)	kPa	1000			
+ P EXCHANGERS	kPa	100	PUMP PERFORMANCE @ DESIGN FLOW		
+ P FURNACES	kPa		HYDRAULIC POWER	kW	891
+ P ORIFICES	kPa		EST. % EFFICIENCY (Note 1)		73%
+ P OTHERS	kPa		EST. ABSORBED POWER	kW	1219
+ P CONTINGENCY	kPa		EST. DRIVER RATING	kW	
PUMP DISCHARGE PRESSURE (Note 2)	kPaA	16220	DISCHARGE VALVE CONDITION ON START - UP		

NOTES

(1) VALUE TABULATED IS ESTIMATED AND MUST BE VERIFIED BY FINAL MECHANICAL DESIGN

(2) HYDRAULIC LINE LOSS VALUES ARE BASED ON A PRELIMINARY CALCULATION AND SHOULD BE CONFIRMED WHEN FINAL SYSTEM DETAILS ARE KNOWN.

(3) TO BE CONFIRMED BY FINAL MECHANICAL DESIGN.

(4) CALCULATION IS VALID FOR NORMAL CASE - RECLAIMER OFF.

(5) IT HAS BEEN ASSUMED THAT FLUID VAPOUR PRESSURE WILL BE EQUAL TO THE OPERATING PRESSURE OF THE SUCTION VESSEL.

(6) CONTROL VALVE PRESSURE DROP TAKEN AS 10% OF ASSUMED 10,000 kPa TRANSPORT LINE PRESSURE DROP. THIS SHOULD BE CONFIRMED DURING DETAILED ENGINEERING OF THE CO2 TRANSPORT SYSTEM.

(7) SUCTION VESSEL BOTTOM TAN LINE TO BE 5.5m ELEVATION ABOVE PUMP CENTRE LINE FOR NPSH REQUIREMENTS.

CLIENT	:	**U. S. Department of Energy, Office of Fossil Energy, National Energy Technology Laboratory**
PROJECT TITLE	:	**FEED Study for Carbon Capture Plant Retrofit**
JOB NUMBER	:	**26301**
M.R. NUMBER	:	
EQUIPMENT NUMBER	:	ME-116
EQUIPMENT TITLE	:	CO2 COMPRESSOR 3RD STAGE STEAM GENERATOR
SERIAL NUMBER	:	
CRITICALITY RATING	:	

COMMENTS:

A. Vendor to add all missing data.

B. Vendor to advise number and configuration of exchangers required.

Acknowledgment: This material is based upon work supported by the Department of Energy Award Number DE-FE0031848.

Disclaimer: This report was prepared as an account of work sponsored by an agency of the United States Government. Neither the United States Government nor any agency thereof, nor any of their employees, makes any warranty, express or implied, or assumes any legal liability or responsibility for the accuracy, completeness, or usefulness of any information, apparatus, product, or process disclosed, or represents that its use would not infringe privately owned rights. Reference herein to any specific commercial product, process, or service by trade name, trademark, manufacturer, or otherwise does not necessarily constitute or imply its endorsement, recommendation, or favoring by the United States Government or any agency thereof. The views and opinions of authors expressed herein do not necessarily state or reflect those of the United States Government or any agency thereof.

REV	DATE	DESCRIPTION	BY	CHKD	APPD		
0	31-Jul-20	ISSUED FOR INFORMATION	MJC	DT	MJC/ADB		

BECHTEL			JOB No	**26301**
			DATA SHEET No.	REV
		Heat Exchanger (S&T) Data Sheet - CO_2 Compressor 3rd Stage Steam Generator	Bechtel: 26301-000-M5D-QG-00023 Owner: NOT USED	0
			SHEET 1 OF 4	

1	Applicable To:	○ Proposal	○ Purchase	○ As Built	○ ASME	○ API 660	○ Other														
2	Service													Tag No:							
3	Manufacturer:													Mfr Serial Number							
4	Size:	TEMA Type	Position:	● Horizontal	○ Vertical	Connected in:	Series:							Parallel:							
5	Surface Area per Shell (Effective)	m²	No. Shells per unit:			Surface Area per Unit (Effective)		m²	No. of Units												
6	PERFORMANCE OF ONE UNIT																				
7	Fluid Allocation					SHELLSIDE								TUBESIDE							
8	Fluid Circulated					BFW / STEAM (Note 2)								CO2 (Note 2)							
9	Total Fluid Entering	kg/h				3,140								128,908							
10																					
11	Liquid	kg/h																			
12	Vapor	kg/h - Mol wt										128,908	44.0			128,908				44.0	
13	Non Condensables	kg/h - Mol wt																			
14	Steam	kg/h						3,140													
15	Water	kg/h			3,140																
16	Fluid Vaporized / Condensed	kg/h																			
17			LIQUID	VAPOR	LIQUID	VAPOR						LIQUID	VAPOR (Note 1)			LIQUID				VAPOR (Note 1)	
18	Density	kg/m³	959.57			1.31							109.00							130.18	
19	Viscosity	Pa.s	2.830E-04			1.354E-05							2.381E-05							2.250E-05	
20	Thermal Conductivity	W/m K	0.6758			0.0296							0.0335							0.0308	
21	Specific Heat	kJ/kg°C	4.1741			1.9460							1.1736							1.2387	
22	Latent Heat	kJ/kg																			
23	Temperature	°C	98.9			125.8						176.7				129.4					
24	Operating Pressure	kPa A	267.9			237.9						8358.3				8330.7					
25	Velocity	m/s																			
26	Pressure Drop.	kPa	Allowed	30.0	Calc'd							Allowed	30.0	Calc'd							
27	Fouling Resistance	m² K/W	0.0002									0.00018									
28	Heat Exchanger	kW	2,024																		
29	MTD Corrected	°C																			
30	Heat Transfer Coefficient	W/m² k	Service (Actual):				Service (Required)								Clean:						
31	CONSTRUCTION OF ONE SHELL																				
32						SHELLSIDE								TUBESIDE							
33	Design Pressure	kPaG				8593 / FV								11171 / FV							
34	Test Pressure	kPaG																			
35	Design Temperature Max / Min	°C				177 / -17								205 / -90 (Note 3)							
36	Number of Passes																				
37	CONNECTIONS		No	SIZE	RATING	FACING						No	SIZE	RATING		FACING					
38	SIZE	Inlet mm																			
39	&	Outlet mm																			
40	RATING	Intermediate mm																			
41	Corrosion Allowance	mm																			
42	Insulation Thickness	mm																			
43	Tubes	No:	O.D. mm.	Thk: mm.	Length: m.	Pitch : mm	Arrangement	30°	45°	60°	90°										
44		Type ○ Plain ○ Finned			Material (Note 3)		○ Seamless ○ Welded														
45	Shell Material: (Note 3)		I.D. mm.		Shell Cover Material: (Note 3)		○ Integral ○ Removable														
46	Channel Material: (Note 3)				Channel Cover Material: (Note 3)		○ Integral ○ Removable														
47	Tubesheet Stationary Material: (Note 3)				Tubesheet -Floating Material: (Note 3)																
48	Floating Head Cover Material: (Note 3)				Impingement Plate Material: (Note 3)																
49	Cross Baffles	Matl:	Type		Percent Cut:	○ Diameter	○ Area														
50		Spacings:	Central mm		Inlet: mm		Outlet: mm														
51	Long'l Baffle	Matl:	Seal Type																		
52	Tube Support:		Type:																		
53	Bypass Seal: Type:		No. Pairs:		Tube to Tubesheet Joint:																
54	Expansion Joint:	NONE	Type																		
55	Gaskets	Shellside			Tubeside																
56		Floating Head																			
57	Design Code:		Code Stamp:		TEMA Class:		API STD.		Specifications:												
58	Weights (Each Shell):	Full of Water: kg			Empty: kg				Tube-Bundle: kg												
59	Miscellaneous Equipment:																				
60																					

BECHTEL	**Heat Exchanger (S&T) Data Sheet - CO2 Compressor 3rd Stage Steam Generator**	Job No	**26301**
		Process	Datasheet No. REV
		Bechtel: 26301-000-M5D-QG-00023 USED	Owner: NOT 0
		Sheet	2 of 4

DESIGN DATA

	Temperature °C	Pressure kPaA	Enthalpy kJ/kg	Vapor Fraction Mol % Note 1	Vapor Fraction Vol % Note 1	Heat Duty kW
1	176.67	82.58		100.00	100.00	0
2	171.85	82.56		100.00	100.00	-202
3	167.04	82.53		100.00	100.00	-405
4	162.26	82.50		100.00	100.00	-607
5	157.49	82.47		100.00	100.00	-810
6	152.75	82.44		100.00	100.00	-1,012
7	148.03	82.42		100.00	100.00	-1,214
8	143.34	82.39		100.00	100.00	-1,417
9	138.67	82.36		100.00	100.00	-1,619
10	134.04	82.33		100.00	100.00	-1,822
11	129.44	82.31		100.00	100.00	-2,024

HEAT RELEASE CURVE - TUBE SIDE (CO2)

NOTES:

1. Dense phase CO2
2. 10% design margin shall be added to the mass flowrate and exchnager duty.
3. Based on depressurising temperature. Initial estimate is approximately -88°C.

CLIENT	:	**U. S. Department of Energy, Office of Fossil Energy, National Energy Technology Laboratory**
PROJECT TITLE	:	**FEED Study for Carbon Capture Plant Retrofit**
JOB NUMBER	:	**26301**
M.R. NUMBER	:	
EQUIPMENT NUMBER	:	ME-117
EQUIPMENT TITLE	:	CO2 COMPRESSOR 3RD STAGE INTERCOOLER
SERIAL NUMBER	:	
CRITICALITY RATING	:	

COMMENTS:

A. Vendor to add all missing data.

B. Vendor to advise number and configuration of exchangers required.

Acknowledgment: This material is based upon work supported by the Department of Energy Award Number DE-FE0031848.

Disclaimer: This report was prepared as an account of work sponsored by an agency of the United States Government. Neither the United States Government nor any agency thereof, nor any of their employees, makes any warranty, express or implied, or assumes any legal liability or responsibility for the accuracy, completeness, or usefulness of any information, apparatus, product, or process disclosed, or represents that its use would not infringe privately owned rights. Reference herein to any specific commercial product, process, or service by trade name, trademark, manufacturer, or otherwise does not necessarily constitute or imply its endorsement, recommendation, or favoring by the United States Government or any agency thereof. The views and opinions of authors expressed herein do not necessarily state or reflect those of the United States Government or any agency thereof.

REV	DATE	DESCRIPTION	BY	CHKD	APPD		
0	31-Jul-20	ISSUED FOR INFORMATION	MJC	DT	MJC/ADB		

BECHTEL

Heat Exchanger (S&T) Data Sheet - CO2 Compressor 3rd Stage Intercooler

JOB No	**26301**	
DATA SHEET No.		REV
Bechtel: 26301-000-M5D-QG-00024 Owner: NOT USED		0
SHEET	1 OF 4	

| | | |

DESIGN DATA

	Temperature °C	Pressure kPaA	Enthalpy kJ/kg	Vapor Fraction Mol % (Note 3)	Vapor Fraction Vol % (Note 3)	Heat Duty kW
1	129.44	8,330.68				0
2	116.05	8,327.23				-602
3	103.12	8,323.78				-1,204
4	90.79	8,320.34				-1,805
5	79.23	8,316.89				-2,407
6	68.68	8,313.44				-3,009
7	59.38	8,309.99				-3,611
8	51.59	8,306.55				-4,213
9	45.53	8,303.10				-4,815
10	41.27	8,299.65				-5,416
11	38.60	8,296.20				-6,018

HEAT RELEASE CURVE - SHELL SIDE (CO2)

NOTES:

1. Based on depressurising temperature. Initial estimate is approximately -88°C.
2. 10% design margin shall be added to the mass flowrate and exchanger duty.
3. Dense phase CO2

CLIENT	:	**U. S. Department of Energy, Office of Fossil Energy, National Energy Technology Laboratory**
PROJECT TITLE	:	**FEED Study for Carbon Capture Plant Retrofit**
JOB NUMBER	:	**26301**
M.R. NUMBER	:	
EQUIPMENT NUMBER	:	ME-118
EQUIPMENT TITLE	:	CO2 PRODUCT COOLER
SERIAL NUMBER	:	
CRITICALITY RATING	:	

COMMENTS:

A. Vendor to add all missing data.

B. Welded-type plate heat exchanger required.

Acknowledgment: *This material is based upon work supported by the Department of Energy Award Number DE-FE0031848.*

Disclaimer: *This report was prepared as an account of work sponsored by an agency of the United States Government. Neither the United States Government nor any agency thereof, nor any of their employees, makes any warranty, express or implied, or assumes any legal liability or responsibility for the accuracy, completeness, or usefulness of any information, apparatus, product, or process disclosed, or represents that its use would not infringe privately owned rights. Reference herein to any specific commercial product, process, or service by trade name, trademark, manufacturer, or otherwise does not necessarily constitute or imply its endorsement, recommendation, or favoring by the United States Government or any agency thereof. The views and opinions of authors expressed herein do not necessarily state or reflect those of the United States Government or any agency thereof.*

REV	DATE	DESCRIPTION	BY	CHKD	APPD		
0	07-Aug-20	ISSUED FOR INFORMATION	MJC	DT	MJC/ADB		

Applicable To: ☐ Proposal ☐ Purchase ☐ As Built ☐ ASME ☐ API ☐ Other _____

Manufacturer _____ Model _____ Serial No. _____

GENERAL DATA

Stream Number			1		2		3		4	
Stream Name			CO2 PRODUCT (Note 2. 5)		COOLING WATER (Note 2)					
Fluid Quantity			IN	OUT	IN	OUT	IN	OUT	IN	OUT
Vapor		kg/h	-	-	-	-				
Liquid		kg/h	128,908	128,908	344,563	344,563				
Steam		kg/h	-	-	-	-				
Water		kg/h	-	-	-	-				
Non-Condensable		kg/h	-	-	-	-				
Temperature		°C	78.0	38.6	28.6	39.4				
Vapor			-	-	-	-				
Density		kg/m³	-	-	-	-				
Viscosity		Pa.s	-	-	-	-				
Thermal Conductivity		W/(m-K)	-	-	-	-				
Specific Heat		kj/(kg-K)	-	-	-	-				
Molecular Weight			-	-	-	-				
Liquid			-	-	-	-				
Density		kg/m³	432.3	762.9	995.5	991.8				
Viscosity		Pa.s	0.0000160	0.0000657	0.000845	0.000679				
Thermal Conductivity		W/(m-K)	0.107	0.087	0.611	0.625				
Specific Heat		kj/(kg-K)	2.690	2.752	4.181	4.176				
Pressure		kPag	15100	15000	200	130				
Velocity		m/s								
Latent Heat		kj/kg								
Pressure Drop	Allow.	kPa	100		70					
Pressure Drop	Calc.	kPa								
Fouling Factor		m²-°C/W	(Note 1)		(Note 1)					
Number of Passes										
Heat Exchanged		kW	**-4,235**		**4,235**					
MTD		°C								
Transfer Rate	Clean	kW/(m²-K)								
Transfer Rate	Service	kW/(m²-K)								

CONSTRUCTION

Number of Plate Heat Exchanger Units										
Number of Cores per Unit										
Core Width		mm								
Core height		mm								
Core Length		mm								
Parting Sheet Thickness		mm								
Outside Sheet Thickness		mm								
Number of Dummy Layers										
Number of Passages										
Passage Width (Effective)		mm								
Passage Length (Effective)		mm								
Fin Type										
Fin Height x Thickness		mm								
Number of Fins per Inch										
Surface Area (Effective)		m²								
Distributor										
Nozzles.			IN	OUT	IN	OUT	IN	OUT	IN	OUT
Rating										
Size		mm								
Number										
Design Pressure		kPag	24474 / FV		850 / FV					
Test Pressure		°C								
Design Temperature	Max	°C	106		80					
	Min	°C	-90(Note 3)		-17					
Design Code										
Manufacturing Standards										
Weights	Operating									
	Full of water									

- DESIGN - MATERIALS - CONSTRUCTION -

Stream Number		1	2	3	4
Stream Name		CO2 PRODUCT	COOLING WATER		
Dimensions					
Width	mm				
Depth	mm				
Height	mm				
Material - (Note 4, 6)		TITANIUM	TITANIUM		
Structural Design Code					
Wind Load Design Code					
Seismic Zone					
Insulation Filling					

DESIGN DATA

	Temperature °C	Pressure kPaA	Enthalpy kJ/kg	Vapor Fraction Mol % (Note 5)	Vapor Fraction Vol % (Note 5)	Heat Duty kW
1	78.05	15200.0		0.00	0.00	0
2	73.76	15190.0		0.00	0.00	-424
3	69.70	15180.0		0.00	0.00	-847
4	65.82	15170.0		0.00	0.00	-1,271
5	62.05	15160.0		0.00	0.00	-1,694
6	58.32	15150.0		0.00	0.00	-2,118
7	54.59	15140.0		0.00	0.00	-2,541
8	50.79	15130.0		0.00	0.00	-2,965
9	46.88	15120.0		0.00	0.00	-3,388
10	42.82	15110.0		0.00	0.00	-3,812
11	38.60	15100.0		0.00	0.00	-4,235

HEAT RELEASE CURVE - STREAM 1 (CO2 PRODUCT)

	Temperature °C	Pressure kPaA	Enthalpy kJ/kg	Vapor Fraction Mol %	Vapor Fraction Vol %	Heat Duty kW
1	28.60	300.00		0.00	0.00	0
2	29.68	293.11		0.00	0.00	424
3	30.76	286.21		0.00	0.00	847
4	31.84	279.32		0.00	0.00	1,271
5	32.91	272.42		0.00	0.00	1,694
6	33.99	265.53		0.00	0.00	2,118
7	35.07	258.63		0.00	0.00	2,541
8	36.15	251.74		0.00	0.00	2,965
9	37.23	244.84		0.00	0.00	3,388
10	38.31	237.95		0.00	0.00	3,812
11	39.39	231.05		0.00	0.00	4,235

HEAT RELEASE CURVE - STREAM 2 (COOLING WATER)

NOTES:

1. Vendor to advise margin to account for fouling in cooling water and CO2 service (minimum 10%).
2. 5% margin shall be added to the mass flowrate and duty.
3. Based on depressurising temperature. Initial estimate is approximately -88°C.
4. Vendor to confirm material selection based on own product experience in CO2 and cooling water service.
5. Dense phase CO2
6. Cooling water quality is listed below;

Calcium	672	mg/l as Ca
Magnesium	248	mg/l as Mg
Total Hardness	2712	mg/l as $CaCO_3$
Sodium	1512	mg/l as Na
Potassium	48	mg/l as K
Iron, dissolved	0.16	mg/l as Fe
Iron, total	0.16	mg/l as Fe
Manganese, dissolved	0.1	mg/l as Mn
Manganese, total	0.1	mg/l as Mn
Barium	1.04	mg/l as Ba
Strontium	8.2	mg/l as Sr
Sulfates	2421	mg/l as SO_4
Chlorides	2216	mg/l as Cl
Fluorides	2.2	mg/l as F
Nitrates	< 5	mg/l as NO_3
Nitrites	< 0.1	mg/l as NO_2
Phosphorus	0.5	mg/l as P
P Alkalinity	< 5	mg/l as $CaCO_3$
M Alkalinity	172	mg/l as $CaCO_3$
Silica, dissolved	25	mg/l as SiO_2
Silica, total	25	mg/l as SiO_2
pH	7.5 to 8.0	(standard units)
Conductivity	13040	µS/cm at 25 °C
Total Dissolved Solids (TDS)	8350	mg/l
Total Suspended Solids (TSS)	50	mg/l

CLIENT	:	**U. S. Department of Energy, Office of Fossil Energy, National Energy Technology Laboratory**
PROJECT TITLE	:	**FEED Study for Carbon Capture Plant Retrofit**
JOB NUMBER	:	**26301**
M.R. NUMBER	:	
EQUIPMENT NUMBER	:	MC-101A/B
EQUIPMENT TITLE	:	Air Compressor
SERIAL NUMBER	:	
CRITICALITY RATING	:	

COMMENTS:

1. Seller shall replace all * (asterisks) with applicable information.
2. Seller shall size air compressor based on air dryer net outlet flow rate requirement of 420 m3/hr.
3. 2 x 100% capacity is required

Acknowledgment: *This material is based upon work supported by the Department of Energy Award Number DE-FE0031848.*

Disclaimer: *This report was prepared as an account of work sponsored by an agency of the United States Government. Neither the United States Government nor any agency thereof, nor any of their employees, makes any warranty, express or implied, or assumes any legal liability or responsibility for the accuracy, completeness, or usefulness of any information, apparatus, product, or process disclosed, or represents that its use would not infringe privately owned rights. Reference herein to any specific commercial product, process, or service by trade name, trademark, manufacturer, or otherwise does not necessarily constitute or imply its endorsement, recommendation, or favoring by the United States Government or any agency thereof. The views and opinions of authors expressed herein do not necessarily state or reflect those of the United States Government or any agency thereof.*

REV	DATE	DESCRIPTION	BY	CHKD	APPD		
0	9-Nov-20	ISSUED FOR INFORMATION	CB	MC	VS		

Mechanical Data Sheet - Air Compressor

JOB No	**26301**	
DATA SHEET No.		REV
Bechtel: 26301-000-3SD-MCRA-00001 Owner: NOT USED		0
SHEET	1 OF 3	

1	SERVICE			INSTRUMENT AIR		
2	EQUIPMENT NUMBER(S)			1-PA-MC-101A/B		
3	QUANTITY			2 (TWO)		
4	AIR QUALITY			OIL-FREE		
5	AIR DELIVERY: SPECIFIED / BID (scmh)			(NOTE 2)		500
6	DESIGN PRESSURE (barg)			*		
7	OPERATING PRESSURE: STARTING / UNLOADING (barg)			6.9		8.6
8	ALTITUDE ABOVE SEA LEVEL (m)			214		
9	DESIGN AMBIENT TEMPERATURE: MIN./MAX. (C)			-10		43
10	DESIGN RELATIVE HUMIDITY (% at C)			85	@	19
11	TYPE OF COMPRESSOR:			ROTARY SCREW		
12	NUMBER OF STAGES:			*		
13	VOLUMETRIC EFF.: 1ST STAGE / 2ND STAGE (%)			*		*
14	AIR TEMPERATURE LEAVING COMPRESSOR: (C)			*		
15	SEISMIC AND WIND DESIGN REQUIREMENTS					
16	COOLING TYPE			AIR COOLED		
17	COOLING WATER					
18	FLOW RATE (m3/hr)			N/A		
19	TEMPERATURE: INLET/OUTLET (C)			N/A		N/A
20	PRESSURE DROP: (bar)			N/A		
21	PRESSURE: OPERATING / DESIGN (barg)			N/A		N/A
22	TUBE MATERIAL			N/A		
23	COOLING AIR FAN					
24	CAPACITY (m3/hr)			*		
25	PRESSURE AVAILABLE FOR BUYER DUCTING (mm H2O)			*		
26	SPEED (RPM)			*		
27	MAXIMUM ALLOWABLE NOISE LEVELS (dBA at m)			85	@	1
28	LUBRICATION SYSTEM TYPE:			FORCED		
29	MATERIAL: CASING			CAST IRON		
30	ROTATING ELEMENTS			HIGH ALLOY STEEL		
31	BEARING TYPES: RADIAL / AXIAL			*		*
32	SHAFT SEAL TYPE:			*		
33	CONNECTIONS:					
34	AIR DISCHARGE (SIZE / TYPE / FACING)			*	*	*
35	COOLING WATER INLET: (SIZE / TYPE / FACING)			N/A	N/A	N/A
36	COOLING WATER OUTLET: (SIZE / TYPE / FACING)			N/A	N/A	N/A
37	INTAKE FILTER - SILENCER			REQUIRED		
38	MFR. / TYPE			*		*
39	SIZE / MODEL NO.			*		*
40	PARTICLE REMOVAL (microns)			5		
41	DRIVER:	ENCLOSURE	RATED KILOWATTS			
42		VOLTAGE	FREQUENCY	460		60
43	CONTROL PANEL NEMA RATING			IP 54		
44	WEATHER PROTECTION FREEZE PROTECTION			REQUIRED		REQUIRED
45	BOLT DOWN PROVISIONS			REQUIRED		
46	COATING SYSTEM			*		
47	LOCATION			OUTDOOR		
48	P&ID NUMBERS(S)			M6-PA-00001		
49	MANUFACTURER MODEL NUMBER			*		*
50	WEIGHT: COMPRESSOR / HEAVIEST PIECE (kg)			*		*

NOTES:

1.Seller shall replace all * (asterisks) with applicable information.

2.Seller shall size air compressor based on air dryer net outlet flow rate requirement of 420 m3/hr.

3. 2 x 100% capacity is required

BECHTEL		Job No	26301
		Process	Datasheet No. / REV
	Mechanical Data Sheet - Air Compressor	Bechtel: 26301-000-3SD-MCRA-00001 Owner: NOT USED	0
		Sheet	2 of 3

		AIR COMPRESSOR MOTORS
Item No	**Description**	**Requirement**
1	**TYPE**	Induction
2	**VOLTAGE**	460 V
3	**PHASE**	3
4	**FREQUENCY (Hz)**	60 Hz
5	**STARTING VOLTAGE**	80 to 105% Nominal Voltage
6	**INSULATION CLASS**	F
7	**TEMP RISE (°C @ RATING)**	Limited to 80C
8	**STARTING CURRENT**	NEMA Code Letter G
9	**PULL OUT TORQUE @ FULL VOLTAGE**	NEMA Design B
10	**NO. OF STARTS • HOT**	2
11	**NO. OF STARTS • COLD**	3
12	**MOTOR ENCLOSURE**	IP54
13	**COOLING**	TEFC
14	**PLUG-IN TERMINALS**	Yes (Fully Insulated Suitable for 25 kA Fault Current)
15	**TERMINAL BOX ENCLOSURE**	IP55
16	**SOUND LEVEL**	Not to Exceed 80 dB @ one Meter
17	**BEARING TYPE**	Standard
18	**QUALITY STANDARD**	ISO 9001:2015 or Equivalent
19	**ROUTINE TEST PER NEMA MG1**	YES
20	**INSULATION RESISTANCE TEST**	FOR WINDINGS
21	**FULL LOAD LOSS AND EFFICIENCY TEST**	Type Test
22	**LOCKED ROTOR TEST**	YES
23	**OVER SPEED**	N/A
24	**VIBRATION**	N/A
25	**NOISE**	N/A
26	**WITHSTAND VOLTAGE TEST**	YES
27	**POWER**	At 100% senice load (power requirement of the driven machine), the electric motor shall not be loaded more than 90%
28	**PTC THERMISTOR PROTECTION**	REQUIRED
29	**TEMPERATURE RISE TEST AT FULL LOAD**	N/A
30	**COIL IMPULSE TEST**	N/A

CLIENT	:	**U. S. Department of Energy, Office of Fossil Energy, National Energy Technology Laboratory**
PROJECT TITLE	:	**FEED Study for Carbon Capture Plant Retrofit**
JOB NUMBER	:	**26301**
M.R. NUMBER	:	
EQUIPMENT NUMBER	:	MS-105A/B
EQUIPMENT TITLE	:	Air Dryer
SERIAL NUMBER	:	
CRITICALITY RATING	:	

COMMENTS:

1. Seller shall replace all * (asterisks) with applicable information.
2. Seller shall provide outdoor acoustical enclosure.
3. 2 x 100% capacity is required

Acknowledgment: *This material is based upon work supported by the Department of Energy Award Number DE-FE0031848.*

Disclaimer: *This report was prepared as an account of work sponsored by an agency of the United States Government. Neither the United States Government nor any agency thereof, nor any of their employees, makes any warranty, express or implied, or assumes any legal liability or responsibility for the accuracy, completeness, or usefulness of any information, apparatus, product, or process disclosed, or represents that its use would not infringe privately owned rights. Reference herein to any specific commercial product, process, or service by trade name, trademark, manufacturer, or otherwise does not necessarily constitute or imply its endorsement, recommendation, or favoring by the United States Government or any agency thereof. The views and opinions of authors expressed herein do not necessarily state or reflect those of the United States Government or any agency thereof.*

REV	DATE	DESCRIPTION	BY	CHKD	APPD		
0	9-Nov-20	ISSUED FOR INFORMATION	CB	MC	VS		

1	INLET CONDITIONS TO DRYER			
2	FLOW RATE (Max.) (scmh)	500		
3	PRESSURE (barg)	7		
4	TEMPERATURE (Max.) (C)	*		
5	HUMIDITY (%)	100		
6	OUTLET CONDITIONS FROM DRYER			
7	NET OUTLET FLOWRATE (scmh)	420		
8	DEWPOINT AT OUTLET PRESSURE (C)	-40		
9	MAXIMUM PRESSURE DROP (bar)	0.34		
10	MAXIMUM ALLOWABLE NOISE LEVELS (___ dBA at m)	85	@	1
11	AVERAGE PURGE FLOW RATE (scmh)	34		
12	POWER AVAILABLE FOR CONTROLS VOLTS / PHASE / HERTZ	115	1	60
13	AIR PRESSURE AVAILABLE FOR CONTROLS (barg)	7		
14	DESIGN PRESSURE (barg)	10.3		
15	CODE REQUIREMENTS	ASME SECTION VIII, DIV 1		
16	CODE STAMP REQUIRED (YES/NO)	YES		
17	WIND LOAD REQUIREMENTS	90 MPH - International Building Code (IBC) 2018, ASCE 7		
18	SEISMIC DESIGN REQUIREMENTS	IBC 2018/ASCE 7, Design Category B, Ss = 0.169g, S1 = 0.0.060g, Site Class D		
19	NOZZLE LOADS: FORCES MOMENTS			
20	AIR INLET	*	*	
21	AIR OUTLET	*	*	
22	CONNECTIONS			
23	INLET SIZE (mm) / TYPE , RATING / FACING	*	*	*
24	OUTLET SIZE (mm) / TYPE , RATING / FACING	*	*	*
25	DRYER			
26	MANUFACTURER / MODEL NUMBER	*	*	
27	EQUIPMENT NUMBER(S)	1-PA-MS-105A/B		
28	QUANTITY	2		
29	FILTER ARRANGEMENT	*		
30	FILTER DIFFERENTIAL PRESSURE INDICATORS ISOLATABLE?	NO		
31	COATING SYSTEM			
32	PREFILTER			
33	MANUFACTURER / MODEL NUMBER	*	*	
34	RATING: LIQUID REMOVAL (%)	99.99		
35	PARTICULATE REMOVAL (microns)	1		
36	EQUIPMENT NUMBER(S)			
37	QUANTITY	1 PER DRYER		
38	AFTERFILTER			
39	MANUFACTURER / MODEL NUMBER	*	*	
40	RATING: (microns)	1		
41	EQUIPMENT NUMBER(S)			
42	QUANTITY	1 PER DRYER		
43	LOCATION	OUTDOOR		
44	P&ID NUMBER(S)	M6-PA-00001		
45	MANUFACTURER	*		
46	MODEL NUMBER	*		
47	WEIGHT (kg)	*		

NOTES:

1.Seller shall replace all * (asterisks) with applicable information.
2.Seller shall provide outdoor acoustical enclosure.
3. 2 x 100% capacity is required

Appendix H: Line Designation Table

BECHTEL NATIONAL Inc.

FEED STUDY FOR CARBON CAPTURE PLANT RETROFIT

LINE DESIGNATION TABLE

Acknowledgment: *This material is based upon work supported by the Department of Energy Award Number DE-FE0031848.*

Disclaimer: *This report was prepared as an account of work sponsored by an agency of the United States Government. Neither the United States Government nor any agency thereof, nor any of their employees, makes any warranty, express or implied, or assumes any legal liability or responsibility for the accuracy, completeness, or usefulness of any information, apparatus, product, or process disclosed, or represents that its use would not infringe privately owned rights. Reference herein to any specific commercial product, process, or service by trade name, trademark, manufacturer, or otherwise does not necessarily constitute or imply its endorsement, recommendation, or favoring by the United States Government or any agency thereof. The views and opinions of authors expressed herein do not necessarily state or reflect those of the United States Government or any agency thereof.*

											Document Number		
											BECHTEL: 26301-000-M0X-0000-00002 **OWNER : NOT USED**		
											Rev	**Job Number**	**Page**
		00	Aug-07-2020	ISSUED FOR INFORMATION	MDP	MJC	MJC/ADB						
		Rev	**Date**	**Description**	**BY**	**CHKD**	**APPD**				**00**	**26301**	**1** of **17**

NOTES:

1.) DESIGN PRESSURES ARE BASED ON PROCESS DATASHEETS AND/OR SUFFICIENT MARGIN FROM THE OPERATING CONDITIONS (PARTICULARLY FOR UTILITY SYSTEMS)

2.) OPERATIONAL PRESSURE AND TEMPERATURES FROM HEAT & MASS BALANCE NORMAL CASE - RECLAIMER OFF (26301-000-M4-CN-00001 REV 1)

3.) LINE SIZING OF UNDERGROUND DRAIN LINES TO BE DEVELOPED DURING DETAILED ENGINEERING.

4.) HEAT TRACE MAINTAIN TEMPERATURE TO BE DEVELOPED DURING DETAILED ENGINEERING.

5.) PSV INLET AND OUTLET LINE SIZES TO BE CONFIRMED DURING DETAILED ENGINEERING

6.) PRESTRESSED CONCRETE CYLINDER PIPE (PCCP) TO BE USED FOR UNDERGROUND COOLING WATER LINES (PMS = 5SJ0) 48" AND ABOVE .

7.) STREAM 305 FROM HMB REV 1 REPORTS AN OPERATING PRESSURE IN PSIA - THE CORRECT OPERATING PRESSURE IS 2.92 BARG

8.) MAXIMUM OPERATING PRESSURE OF FOGGER WATER IS 34.5 BARG (500 PSIG).

9.) UNDERGROUND COOLING WATER LINES BETWEEN 16" AND 36" TO BE MANUFACTURED FROM HDPE (PMS = ESD0) - MINIMUM SIZE FOR UG LINE OF 16".

10.) EQUIVALENT HDPE PIPING (EGF0) TO BE INSTALLED INSTEAD OF FIBREGLASS REINFORCED THERMOSETTING RESIN (FSE) IN UNDERGROUND FIREWATER LINES.

Line Designation Table
FEED Study for Carbon Capture Plant Retrofit
Job No.: 26301
Document No.: 26031-000-M0X-0000-00002
Rev. No.: 00

Unit	Bechtel System Code	Comm Group Code	Seq No.	Line Class	Dia (inches)	Line Number	From	To	P&ID From	P&ID To	Insulated (Y/N)	Heat Trace	Insulation Thickness (in)	Phase	Operating Press (Barg)	Design Press (Barg)	Operating Temp (Deg C)	Design Temp (Deg C)	Remarks
1	AB	L	001	C1E	36	1-AB-L001-C1E-36"	OSBL LP STEAM, 1-AB-L010	1-AB-L002, 1-AB-L004, 1-AB-L007, 1-AB-L006, 1-AB-L003		M6-AB-00001	N	N	-	Vapour	2.12	5	135.0	313.0	
1	AB	L	002	C1E	24	1-AB-L002-C1E-24"	1-AB-L001	1-AB-L034, 1-AB-L019, 1-AB-L023	M6-AB-00001	M6-AB-00002	N	N	-	Vapour	2.12	5	135.0	160.0	
1	AB	L	003	C1E	24	1-AB-L003-C1E-24"	1-AB-L001	1-AB-L011, 1-AB-L015	M6-AB-00001	M6-AB-00001	N	N	-	Vapour	2.12	5	135.0	160.0	
1	AB	L	004	C1E	18	1-AB-L004-C1E-18"	1-AB-L001	1-AB-L005, DRAIN	M6-AB-00001	M6-AB-00001	Y	ET	1	Vapour	2.12	5	135.0	160.0	STEAM DRIP LEG
1	AB	L	005	C1E	2	1-AB-L005-C1E-2"	1-AB-L004	1-AB-L008	M6-AB-00001	M6-AB-00001	Y	ET	1			5		160.0	INTERMITTENT
1	AB	L	006	C1E	1	1-AB-L006-C1E-1"	1-AB-L001	LP STEAM TO STRIPPER AREA	M6-AB-00001	M6-AB-00001	Y	ET	1			5		160.0	NNF
1	AB	L	007	C1E	18	1-AB-L007-C1E-18"	1-AB-L001	1-AB-L008, 1-AB-L0053	M6-AB-00001	M6-AB-00001	Y	ET	1	Vapour	2.12	5	135.0	160.0	STEAM DRIP LEG
1	AB	L	008	C1E	2	1-AB-L008-C1E-2"	1-AB-L007, 1-AB-L005, 1-AB-L053	1-AB-L029	M6-AB-00001	M6-AB-00002	Y	ET	1			5		160.0	INTERMITTENT
1	AB	L	010	C1E	2.5	1-AB-L010-C1E-2.5"	1-SC-L061	1-AB-L001 (TX-0816)	M6-SC-00001	M6-AB-00001	Y	ET	1			12		150.0	
1	AB	L	011	C1E	18	1-AB-L011-C1E-18"	1-AB-L003, 1-SC-L017	1-AB-L012, 1-AB-L039, 1-AB-L040	M6-AB-00001	M6-AB-00001	N	N	-	Vapour	2.12	5	135.0	160.0	
1	AB	L	012	C1E	10	1-AB-L012-C1E-10"	1-AB-L011	1-AB-L013, 1-AB-L014, DRAIN	M6-AB-00001	M6-AB-00001	Y	ET	1			5		160.0	STEAM DRIP LEG
1	AB	L	013	C1E	1.5	1-AB-L013-C1E-1.5"	1-AB-L012	1-AB-L029	M6-AB-00001	M6-AB-00002	Y	ET	1			5		160.0	INTERMITTENT
1	AB	L	014	C1E	1.5	1-AB-L014-C1E-1.5"	1-AB-L012	1-AB-L014	M6-AB-00001	M6-AB-00001	Y	ET	1			5		160.0	STEAM TRAP
1	AB	L	015	C1E	18	1-AB-L015-C1E-18"	1-AB-L003	1-AB-L041, 1-AB-L042, 1-AB-L043, 1-AB-L016	M6-AB-00001	M6-AB-00001	N	N	-	Vapour	2.12	5	135.0	160.0	
1	AB	L	016	C1E	10	1-AB-L016-C1E-10"	1-AB-L015	1-AB-L017, 1-AB-L018	M6-AB-00001	M6-AB-00001	Y	ET	1			5		160.0	STEAM DRIP LEG
1	AB	L	017	C1E	1.5	1-AB-L017-C1E-1.5"	1-AB-L016	1-AB-L044	M6-AB-00001	M6-AB-00002	Y	ET	1			5		160.0	INTERMITTENT
1	AB	L	018	C1E	1.5	1-AB-L018-C1E-1.5"	1-AB-L016	1-AB-L017	M6-AB-00001	M6-AB-00001	Y	ET	1			5		160.0	STEAM TRAP
1	AB	L	019	C1E	18	1-AB-L019-C1E-18"	1-AB-L002	1-AB-L046, 1-AB-L047, 1-AB-L020	M6-AB-00002	M6-AB-00002	N	N	-	Vapour	2.12	5	135.0	160.0	
1	AB	L	020	C1E	10	1-AB-L020-C1E-10"	1-AB-L019	1-AB-L021, DRAIN	M6-AB-00002	M6-AB-00002	Y	ET	1			5		160.0	STEAM DRIP LEG
1	AB	L	021	C1E	1.5	1-AB-L021-C1E-1.5"	1-AB-L020, 1-AB-L022	1-AB-L027, 1-AB-L022	M6-AB-00002	M6-AB-00002	Y	ET	1			5		160.0	INTERMITTENT
1	AB	L	022	C1E	1.5	1-AB-L022-C1E-1.5"	1-AB-L021	1-AB-L021	M6-AB-00002	M6-AB-00002	Y	ET	1			5		160.0	STEAM TRAP
1	AB	L	023	C1E	18	1-AB-L023-C1E-18"	1-AB-L002	1-AB-L048, 1-AB-L049, 1-AB-L071, 1-AB-L050, 1-AB-L024	M6-AB-00002	M6-AB-00002	N	N	-	Vapour	2.12	5	135.0	160.0	
1	AB	L	024	C1E	10	1-AB-L024-C1E-10"	1-AB-L023	1-AB-L025, DRAIN	M6-AB-00002	M6-AB-00002	Y	ET	1			5		160.0	STEAM DRIP LEG
1	AB	L	025	C1E	1.5	1-AB-L025-C1E-1.5"	1-AB-L024, 1-AB-L026	1-AB-L027, 1-AB-L026	M6-AB-00002	M6-AB-00002	Y	ET	1			5		160.0	INTERMITTENT
1	AB	L	026	C1E	1.5	1-AB-L026-C1E-1.5"	1-AB-L025	1-AB-L025	M6-AB-00002	M6-AB-00002	Y	ET	1			5		160.0	STEAM TRAP
1	AB	L	027	C1E	2	1-AB-L027-C1E-2"	1-AB-L025, 1-AB-L021	1-AB-L028	M6-AB-00002	M6-AB-00002	Y	ET	1	Liquid	1.38	5	134.7	160.0	
1	AB	L	028	C1E	4	1-AB-L028-C1E-4"	1-AB-L029,1-AB-L027	1-SC-L037	M6-AB-00002	M6-SC-00001	Y	ET	1			5		160.0	SLOPED, NNF
1	AB	L	029	C1E	2	1-AB-L029-C1E-2"	1-AB-L044	1-AB-L028	M6-AB-00002	M6-AB-00002	Y	ET	1	Liquid	1.38	5	134.7	160.0	
1	AB	L	030	C1E	1	1-AB-L030-C1E-1"	1-AB-L034	1-AB-L031	M6-AB-00002	M6-AB-00002	Y	ET	1			5		160.0	
1	AB	L	031	C1E	1	1-AB-L031-C1E-1"	1-AB-L030	LP STEAM TO CO2 COMPRESSOR BLDG	M6-AB-00002	M6-AB-00002	N	N	-			5		160.0	NNF
1	AB	L	032	C1E	1	1-AB-L032-C1E-1"	1-AB-L034	1-AB-L033	M6-AB-00002	M6-AB-00002	Y	ET	1			5		160.0	
1	AB	L	033	C1E	1	1-AB-L033-C1E-1"	1-AB-L032	LP STEAM TO WORKSHOP/STORES	M6-AB-00002	M6-AB-00002	N	N	-			5		160.0	NNF
1	AB	L	034	C1E	2	1-AB-L034-C1E-2"	1-AB-L002	AB-L059, 1-AB-L056, 1-AB-L030, 1-AB-L062, 1-AB-L038, 1-AB-L035, 1-AB-L0	M6-AB-00002	M6-AB-00002	Y	ET	1	Vapour	2.12	5	135.0	160.0	
1	AB	L	035	C1E	1	1-AB-L035-C1E-1"	1-AB-L034	LP STEAM TO CHEMICAL STORAGE AREA	M6-AB-00002	M6-AB-00002	Y	ET	1			5		160.0	NNF
1	AB	L	036	C1E	1	1-AB-L036-C1E-1"	1-AB-L034	DRAINS	M6-AB-00002	M6-XW-00002	Y	ET	1			5		160.0	NNF
1	AB	L	037	C1E	1	1-AB-L037-C1E-1"	1-AB-L036	1-AB-L036	M6-AB-00002	M6-AB-00002	Y	ET	1			5		160.0	BYPASS, NNF
1	AB	L	038	C1E	1	1-AB-L038-C1E-1"	1-AB-L034	LP STEAM TO CO2 TRANSFER AREA	M6-AB-00002	M6-AB-00002	Y	ET	1			5		160.0	NNF
1	AB	L	039	C1E	14	1-AB-L039-C1E-14"	1-AB-L011	ME-110A	M6-AB-00001	M6-CN-00150	N	N	-	Vapour	2.12	5	135.0	160.0	
1	AB	L	040	C1E	14	1-AB-L040-C1E-14"	1-AB-L011	ME-110B	M6-AB-00001	M6-CN-00150	N	N	-	Vapour	2.12	5	135.0	160.0	
1	AB	L	041	C1E	14	1-AB-L041-C1E-14"	1-AB-L015	ME-110C	M6-AB-00001	M6-CN-00150	N	N	-	Vapour	2.12	5	135.0	160.0	
1	AB	L	042	C1E	14	1-AB-L042-C1E-14"	1-AB-L015	ME-110D	M6-AB-00001	M6-CN-00150	N	N	-	Vapour	2.12	5	135.0	160.0	
1	AB	L	043	C1E	10	1-AB-L043-C1E-10"	1-AB-L015	1-AB-L044, 1-AB-L045	M6-AB-00001	M6-AB-00001	Y	ET	1			5		160.0	STEAM DRIP LEG
1	AB	L	044	C1E	1.5	1-AB-L044-C1E-1.5"	1-AB-L043, 1-AB-L017	1-AB-L029	M6-AB-00001	M6-AB-00002	Y	ET	1			5		160.0	INTERMITTENT
1	AB	L	045	C1E	1.5	1-AB-L045-C1E-1.5"	1-AB-L043	1-AB-L044	M6-AB-00001	M6-AB-00001	Y	ET	1			5		160.0	STEAM TRAP
1	AB	L	046	C1E	14	1-AB-L046-C1E-14"	1-AB-L019	ME-110E	M6-AB-00002		N	N	-	Vapour	2.12	5	135.0	160.0	
1	AB	L	047	C1E	14	1-AB-L047-C1E-14"	1-AB-L019	ME-110F	M6-AB-00002		N	N	-	Vapour	2.12	5	135.0	160.0	
1	AB	L	048	C1E	14	1-AB-L048-C1E-14"	1-AB-L023	ME-110G	M6-AB-00002		N	N	-	Vapour	2.12	5	135.0	160.0	
1	AB	L	049	C1E	14	1-AB-L049-C1E-14"	1-AB-L023	ME-110H	M6-AB-00002		N	N	-	Vapour	2.12	5	135.0	160.0	
1	AB	L	050	C1E	10	1-AB-L050-C1E-10"	1-AB-L023	1-AB-L051	M6-AB-00002	M6-AB-00002	Y	ET	1	Vapour	2.12	5	135.0	160.0	STEAM DRIP LEG
1	AB	L	051	C1E	1.5	1-AB-L051-C1E-1.5"	1-AB-L052, 1-AB-L050	1-SC-L037	M6-AB-00002	M6-SC-00001	Y	ET	1			5		160.0	SLOPED, INTERMITTENT
1	AB	L	052	C1E	1.5	1-AB-L052-C1E-1.5"	1-AB-L051	1-AB-L051	M6-AB-00002	M6-AB-00002	Y	ET	1			5		160.0	STEAM TRAP
1	AB	L	053	C1E	2	1-AB-L053-C1E-2"	1-AB-L007	1-AB-L008	M6-AB-00001	M6-AB-00001	Y	ET	1			5		160.0	BYPASS, NNF
1	AB	L	056	C1E	1	1-AB-L056-C1E-1"	1-AB-L034	LP STEAM TO ABSORBER 1 AREA	M6-AB-00002	M6-AB-00002	Y	ET	1			5		160.0	NNF
1	AB	L	059	C1E	1	1-AB-L059-C1E-1"	1-AB-L034	LP STEAM TO ABSORBER 2 AREA	M6-AB-00002	M6-AB-00002	Y	ET	1			5		160.0	NNF
1	AB	L	061	C1E	4	1-AB-L061-C1E-4"	OSBL MP STEAM	MS-102, 1-AB-L065	M6-AB-00003	M6-CN-00180	Y	ET	1	Vapour	6.00	12	165.0	250.0	
1	AB	L	065	C1E	4	1-AB-L065-C1E-4"	1-AB-L061	1-AB-L067, 1-AB-L069	M6-AB-00003	M6-AB-00003	Y	ET	1			12		250.0	STEAM DRAIN, NNF
1	AB	L	067	C1E	1	1-AB-L067-C1E-1"	1-AB-L065, 1-AB-L069	1-SC-L037	M6-AB-00003	M6-SC-00001	Y	ET	1			5		160.0	STEAM DRAIN, SLOPED, NNF
1	AB	L	069	C1E	1	1-AB-L069-C1E-1"	1-AB-L065	1-AB-L067	M6-AB-00003	M6-AB-00003	Y	ET	1			5		160.0	BYPASS, NNF
1	AB	L	071	C1E	3	1-AB-L071-C1E-3"	1-AB-L023	MS-102	M6-AB-00002	M6-CN-00180	Y	ET	1	Vapour	2.13	5	135.0	160.0	
1	AB	L	076	C1E	1	1-AB-L076-C1E-1"	MS-102	1-SC-L037	M6-CN-00180	M6-SC-00001	Y	ET	1			5		160.0	STEAM TRAP

Line Designation Table
FEED Study for Carbon Capture Plant Retrofit
Job No.: 26301
Document No.: 26031-000-M0X-0000-00002
Rev. No.: 00

Unit	Bechtel System Code	Comm Group Code	Seq No.	Line Class	Dia (inches)	Line Number	From	To	P&ID From	P&ID To	Insulated (Y/N)	Heat Trace	Insulation Thickness (in)	Phase	Operating Press (Barg)	Design Press (Barg)	Operating Temp (Deg C)	Design Temp (Deg C)	Remarks
1	BA	L	001	S6E	4	1-BA-L001-S6E-4"	MP-209A/B	MS-101A	M6-BA-00002	M6-BA-00001	Y	ET	1	Liquid	34.47	39	28.6	80.0	NOTE 8
1	BA	L	002	S6E	4	1-BA-L002-S6E-4"	1-BA-L001	1-BA-L001	M6-BA-00002	M6-BA-00002	Y	ET	1	Liquid	34.47	39	28.6	80.0	BYPASS, NNF, NOTE 8
1	BA	L	003	S6E	2	1-BA-L003-S6E-2"	MP-109A/B	1-BA-L004, 1-BA-L006, 1-BA-L021, 1-BA-L022	M6-BA-00002	M6-BA-00002	Y	ET	1	Liquid	34.47	39	50.5	80.0	NOTE 8
1	BA	L	004	S6E	1.5	1-BA-L004-S6E-1.5"	1-BA-L003	MS-101B	M6-BA-00002	M6-BA-00001	Y	ET	1	Liquid	34.47	39	50.5	80.0	NOTE 8
1	BA	L	005	S6E	1.5	1-BA-L005-S6E-1.5"	1-BA-L004	1-BA-L004	M6-BA-00002	M6-BA-00002	Y	ET	1	Liquid	34.47	39	50.5	80.0	BYPASS, NNF, NOTE 8
1	BA	L	006	S6E	1.5	1-BA-L006-S6E-1.5"	1-BA-L003	MS-101C	M6-BA-00002	M6-BA-00001	Y	ET	1	Liquid	34.47	39	50.5	80.0	NOTE 8
1	BA	L	007	S6E	1.5	1-BA-L007-S6E-1.5"	1-BA-L006	1-BA-L006	M6-BA-00002	M6-BA-00002	Y	ET	1	Liquid	34.47	39	50.5	80.0	BYPASS, NNF, NOTE 8
1	BA	L	011	S1D	8	1-BA-L011-S1D-8"	MA-102 INLET DUCT	1-BA-L014	M6-BA-00001	M6-BA-00001	N	N	-	Vapour	-0.01	0.06	47.8	130.0	NNF
1	BA	L	012	S1D	8	1-BA-L012-S1D-8"	MA-101 INLET DUCT	1-BA-L013	M6-BA-00001	M6-BA-00001	N	N	-	Vapour	-0.01	0.06	47.8	130.0	NNF
1	BA	L	013	S1D	3	1-BA-L013-S1D-3"	1-BA-L012	DRAINS	M6-BA-00001	M6-XW-00002	N	N	-	Vapour	-0.01	0.1	47.8	80.0	NNF, BURIED PIPE
1	BA	L	014	S1D	3	1-BA-L014-S1D-3"	1-BA-L011	DRAINS	M6-BA-00001	M6-XW-00002	N	N	-	Vapour	-0.01	0.1	47.8	80.0	NNF, BURIED PIPE
1	BA	L	015	S1D	3	1-BA-L015-S1D-3"	1-BA-L012	1-BA-L013	M6-BA-00001	M6-BA-00001	N	N	-	Vapour	-0.01	0.06	47.8	130.0	NNF, BYPASS
1	BA	L	016	S1D	3	1-BA-L016-S1D-3"	1-BA-L011	1-BA-L014	M6-BA-00001	M6-BA-00001	N	N	-	Vapour	-0.01	0.06	47.8	130.0	NNF, BYPASS
1	BA	L	020	S1E	3	1-BA-L020-S1E-3"	MS-101A	DRAINS	M6-BA-00001	M6-XW-00003	N	N	-			0.1		80.0	NNF, BURIED PIPE
1	BA	L	021	S6E	2	1-BA-L021-S6E-2"	1-BA-L003	1-BA-L023	M6-BA-00002	M6-BA-00002	Y	ET	1	Liquid	34.47	39	50.5	80.0	MIN FLOW, NOTE 8
1	BA	L	022	S6E	2	1-BA-L022-S6E-2"	1-BA-L003	1-BA-L024	M6-BA-00002	M6-BA-00002	Y	ET	1	Liquid	34.47	39	50.5	80.0	MIN FLOW, NOTE 8
1	BA	L	023	S1E	2	1-BA-L023-S1E-2"	1-BA-L021, 1-BA-L024	MT-104	M6-BA-00002	M6-WP-00010	Y	ET	1			0.04		80.0	MIN FLOW
1	BA	L	024	S1E	2	1-BA-L024-S1E-2"	1-BA-L022	1-BA-L023	M6-BA-00002	M6-BA-00002	Y	ET	1			0.04		80.0	MIN FLOW
1	BA	L	030	C1E	4	1-BA-L030-C1E-4"	FLUE GAS AREA	DRAINS	M6-XW-00003	M6-XW-00003	N	N	-			0.1		80.0	NNF, BURIED PIPE
1	CN	L	101	S1E	14	1-CN-L101-S1E-14"	1-CN-L423	T-101	M6-CN-00010	M6-CN-00010	Y	ET	1	Liquid	0.07	0.1	52.1	100.0	
1	CN	L	102	S1E	6	1-CN-L102-S1E-6"	1-CN-L172	T-101	M6-CN-00085	M6-CN-00010	Y	ET	1	Liquid	4.31	11.0	57.4	145.0	
1	CN	L	103	S1E	24	1-CN-L103-S1E-24"	T-101	MP-101A, 1-CN-L245	M6-CN-00010	M6-CN-00040	Y	ET	1	Liquid	0.07	0.1	52.1	100.0	
1	CN	L	104	S1E	20	1-CN-L104-S1E-20"	T-101	1-CN-L106	M6-CN-00020	M6-CN-00020	Y	ET	1	Liquid	0.07	0.1	52.1	100.0	
1	CN	L	105	S1E	20	1-CN-L105-S1E-20"	T-101	1-CN-L106	M6-CN-00020	M6-CN-00020	Y	ET	1	Liquid	0.07	0.1	52.1	100.0	
1	CN	L	106	S1E	24	1-CN-L106-S1E-24"	1-CN-L104, 1-CN-L105	MP-102A, 1-CN-L221, 1-CN-L270	M6-CN-00020	M6-CN-00030	Y	ET	1	Liquid	3.47	9.1	53.9	80.0	
1	CN	L	107	S1E	16	1-CN-L107-S1E-16"	ME-101, 1-WP-L008, 1-CN-L269	T-101	M6-CN-00030	M6-CN-00020	Y	ET	1	Liquid	2.43	9.1	37.6	80.0	
1	CN	L	111	S1E	2	1-CN-L111-S1E-2"	T-101	1-CN-L112	M6-CN-00010	M6-CN-00010	Y	ET	1	Liquid	0.07	0.1	52.1	100.0	TRIM
1	CN	L	112	S1E	2	1-CN-L112-S1E-2"	1-CN-L111	1-CN-L113	M6-CN-00010	M6-CN-00010	Y	ET	1	Liquid	0.07	0.1	52.1	100.0	TRIM
1	CN	L	113	S1E	2	1-CN-L113-S1E-2"	1-CN-L112	T-101	M6-CN-00010	M6-CN-00010	Y	ET	1	Liquid	0.07	0.1	52.1	100.0	TRIM
1	CN	L	114	S1E	24	1-CN-L114-S1E-24"	T-101	T-102	M6-CN-00010		Y	ET	1	Liquid	0.07	0.1	52.1	100.0	EQUALIZATION LINE
1	CN	L	115	S1E	10	1-CN-L115-S1E-10"	T-101	DRAINS	M6-CN-00010	M6-XW-00001	Y	ET	1	Liquid	0.07	0.1	52.1	100.0	NNF
1	CN	L	116	S1E	6	1-CN-L116-S1E-6"	T-103	DRAINS	M6-CN-00120	M6-XW-00001	Y	ET	1			0.1		80.0	NNF
1	CN	L	119	S1E	6	1-CN-L119-S1E-6"	1-CN-L172	T-102	M6-CN-00085	M6-CN-00085	Y	ET	1	Liquid	4.31	11	57.4	145.0	
1	CN	L	133	S3E	18	1-CN-L133-S3E-18"	1-CN-L666	1-CN-L-162	M6-CN-00081	M6-CN-00120	Y	ET	1	Liquid	8.69	20.8	120.7	160.0	
1	CN	L	135	S1E	48	1-CN-L135-S1E-48"	1-CN-L372, 1-CN-L168	T-103	M6-CN-00150	M6-CN-00120	Y	ET	1	Mixed	1.60	4	131.0	270.0	
1	CN	L	136	S1E	48	1-CN-L136-S1E-48"	1-CN-L373, 1-CN-L169	T-103	M6-CN-00150	M6-CN-00120	Y	ET	1	Mixed	1.60	4	131.0	270.0	
1	CN	L	137	S1E	48	1-CN-L137-S1E-48"	ME-110 E/F	T-103		M6-CN-00120	Y	ET	1	Mixed	1.60	4	131.0	270.0	
1	CN	L	138	S1E	48	1-CN-L138-S1E-48"	ME-110 G/H	T-103		M6-CN-00120	Y	ET	1	Mixed	1.60	4	131.0	270.0	
1	CN	L	139	S1E	8	1-CN-L139-S1E-8"	MS-102	T-103	M6-CN-00180	M6-CN-00120	Y	ET	1	Mixed	1.62	4	150.0	190.0	
1	CN	L	140	S1E	30	1-CN-L140-S1E-30"	T-103	MP-105A, 1-CN-L251	M6-CN-00120	M6-CN-00170	Y	ET	1	Liquid	1.60	3.5	131.0	160.0	
1	CN	L	141	S1E	24	1-CN-L141-S1E-24"	T-103	1-CN-142, 1-CN-L143, 1-CN-L144, 1-CN-L145	M6-CN-00120	M6-CN-00120	Y	ET	1	Liquid	1.60	4	128.4	270.0	
1	CN	L	142	S1E	14	1-CN-L142-S1E-14"	1-CN-L141	1-CN-L164, 1-CN-L265	M6-CN-00120	M6-CN-00150	Y	ET	1	Liquid	1.60	4	128.4	270.0	
1	CN	L	143	S1E	14	1-CN-L143-S1E-14"	1-CN-L141	1-CN-L165, 1-CN-L266	M6-CN-00120	M6-CN-00150	Y	ET	1	Liquid	1.60	4	128.4	270.0	
1	CN	L	144	S1E	14	1-CN-L144-S1E-14"	1-CN-L141	ME-110 E/F	M6-CN-00120		Y	ET	1	Liquid	1.60	4	128.4	270.0	
1	CN	L	145	S1E	14	1-CN-L145-S1E-14"	1-CN-L141	ME-110 G/H	M6-CN-00120		Y	ET	1	Liquid	1.60	4	128.4	270.0	
1	CN	L	147	S1E	18	1-CN-L147-S1E-18"	1-CN-L162	T-103	M6-CN-00120	M6-CN-00120	Y	ET	1	Liquid	1.60	3.5	131.0	160.0	
1	CN	L	148	S1E	2	1-CN-L148-S1E-2"	T-103		M6-CN-00120	M6-CN-00120	Y	ET	1	Liquid	1.60	3.5	131.0	160.0	TRIM
1	CN	L	149	S1E	2	1-CN-L149-S1E-2"	T-103		M6-CN-00120	M6-CN-00120	Y	ET	1	Liquid	1.60	3.5	131.0	160.0	TRIM
1	CN	L	151	S1E	40	1-CN-L151-S1E-40"	T-103, 1-QG-L582	1-CN-L158, 1-CN-L159, 1-CN-L160, 1-CN-L161	M6-CN-00130	M6-CN-00130	N	N	-	Vapour	1.25	3.5	109.3	177.0	SLOPED
1	CN	L	152	S1E	42	1-CN-L152-S1E-42"	1-CN-L180, 1-CN-L182	MV-202	M6-CN-00130	M6-CN-00140	Y	ET	1	Mixed	1.11	3.5	48.9	177.0	
1	CN	L	153	S1E	2	1-CN-L153-S1E-2"	1-CN-L323	T-103	M6-CN-00140	M6-CN-00130	Y	ET	1	Liquid	1.60	3.5	131.0	160.0	
1	CN	L	158	S1E	20	1-CN-L158-S1E-20"	1-CN-L151, 1-CN-L188	ME-111A	M6-CN-00130	M6-CN-00130	N	N	-	Vapour	1.25	3.5	109.3	177.0	
1	CN	L	159	S1E	20	1-CN-L159-S1E-20"	1-CN-L151, 1-CN-L189	ME-111B	M6-CN-00130	M6-CN-00130	N	N	-	Vapour	1.25	3.5	109.3	177.0	
1	CN	L	160	S1E	20	1-CN-L160-S1E-20"	1-CN-L151, 1-CN-L190	ME-111C	M6-CN-00130	M6-CN-00130	N	N	-	Vapour	1.25	3.5	109.3	177.0	
1	CN	L	161	S1E	20	1-CN-L161-S1E-20"	1-CN-L151, 1-CN-L191	ME-111D	M6-CN-00130	M6-CN-00130	N	N	-	Vapour	1.25	3.5	109.3	177.0	
1	CN	L	162	S1E	18	1-CN-L162-S1E-18"	1-CN-L133	T-103	M6-CN-00120	M6-CN-00120	Y	ET	1	Liquid	1.60	3.5	131.0	160.0	
1	CN	L	164	S1E	10	1-CN-L164-S1E-10"	1-CN-L142, 1-CN-L309	ME-110B	M6-CN-00150	M6-CN-00150	Y	ET	1	Liquid	1.60	4	128.4	270.0	
1	CN	L	165	S1E	10	1-CN-L165-S1E-10"	1-CN-L143, 1CN-L313	ME-110D	M6-CN-00150	M6-CN-00150	Y	ET	1	Liquid	1.60	4	128.4	270.0	
1	CN	L	168	S1E	34	1-CN-L168-S1E-34"	ME-110B, 1-CN-L310	1-CN-L135, 1-CN-L365	M6-CN-00150	M6-CN-00150	Y	ET	1	Mixed	1.60	4	131.0	270.0	

Line Designation Table
FEED Study for Carbon Capture Plant Retrofit
Job No.: 26301
Document No.: 26031-000-M0X-0000-00002
Rev. No.: 00

Unit	Bechtel System Code	Comm Group Code	Seq No.	Line Class	Dia (inches)	Line Number	From	To	P&ID From	P&ID To	Insulated (Y/N)	Heat Trace	Insulation Thickness (in)	Phase	Operating Press (Barg)	Design Press (Barg)	Operating Temp (Deg C)	Design Temp (Deg C)	Remarks
1	CN	L	169	S1E	34	1-CN-L169-S1E-34"	ME-110D, 1-CN-L314	1-CN-L136, 1-CN-L367	M6-CN-00150	M6-CN-00150	Y	ET	1	Mixed	1.60	4	131.0	270.0	
1	CN	L	172	S1E	10	1-CN-L172-S1E-10"	1-CN-L681, 1-CN-L685	1-CN-L102, 1CN-L110	M6-CN-00085	M6-CN-00085	Y	ET	1	Liquid	4.31	11	57.4	145.0	
1	CN	L	173	S1E	10	1-CN-L173-S1E-10"	1-CN-L763, 1-CN-L239	T-103	M6-CN-00170	M6-CN-00120	Y	ET	1	Liquid	1.60	3.5	131.0	160.0	MIN FLOW
1	CN	L	176	S1E	4	1-CN-L176-S1E-4"	CHEMICAL CLEANING CONN.	1-CN-L181	M6-CN-00130	M6-CN-00130	Y	ET	1	Mixed	1.11	3.5	48.9	177.0	NNF
1	CN	L	177	S1E	4	1-CN-L177-S1E-4"	CHEMICAL CLEANING CONN.	1-CN-L182	M6-CN-00130	M6-CN-00130	Y	ET	1	Mixed	1.11	3.5	48.9	177.0	NNF
1	CN	L	178	S1E	4	1-CN-L178-S1E-4"	CHEMICAL CLEANING CONN.	1-CN-L183	M6-CN-00130	M6-CN-00130	Y	ET	1	Mixed	1.11	3.5	48.9	177.0	NNF
1	CN	L	179	S1E	4	1-CN-L179-S1E-4"	CHEMICAL CLEANING CONN.	1-CN-L180	M6-CN-00130	M6-CN-00130	Y	ET	1	Mixed	1.11	3.5	48.9	177.0	NNF
1	CN	L	180	S1E	20	1-CN-L180-S1E-20"	ME-111A, 1-CN-L179, 1-CN-L181	1-CN-L152	M6-CN-00130	M6-CN-00130	Y	ET	1	Mixed	1.11	3.5	48.9	177.0	
1	CN	L	181	S1E	20	1-CN-L181-S1E-20"	ME-111B, 1-CN-L176	1-CN-L180	M6-CN-00130	M6-CN-00130	Y	ET	1	Mixed	1.11	3.5	48.9	177.0	
1	CN	L	182	S1E	20	1-CN-L182-S1E-20"	ME-111C, 1-CN-L177, 1-CN-L183	1-CN-L152	M6-CN-00130	M6-CN-00130	Y	ET	1	Mixed	1.11	3.5	48.9	177.0	
1	CN	L	183	S1E	20	1-CN-L183-S1E-20"	ME-111D, 1-CN-L178	1-CN-L182	M6-CN-00130	M6-CN-00130	Y	ET	1	Mixed	1.11	3.5	48.9	177.0	
1	CN	L	184	S1E	2	1-CN-L184-S1E-2"	T-103		M6-CN-00120	M6-CN-00120	Y	ET	1	Liquid	1.60	3.5	131.0	160.0	TRIM
1	CN	L	185	S1E	8	1-CN-L185-S1E-8"	1-CN-L141	DRAINS	M6-CN-00120	M6-CN-00120	Y	ET	1			0.1		80.0	NNF
1	CN	L	187	S1E	2	1-CN-L187-S1E-2"	UTILITY CONNECTION	T-103	M6-CN-00120	M6-CN-00120	Y	ET	1	Liquid	1.60	3.5	131.0	160.0	NNF
1	CN	L	188	S1E	4	1-CN-L188-S1E-4"	CHEMICAL CLEANING CONN.	1-CN-L158	M6-CN-00130	M6-CN-00130	N	N	-	Vapour	1.25	3.5	109.3	177.0	NNF
1	CN	L	189	S1E	4	1-CN-L189-S1E-4"	CHEMICAL CLEANING CONN.	1-CN-L159	M6-CN-00130	M6-CN-00130	N	N	-	Vapour	1.25	3.5	109.3	177.0	NNF
1	CN	L	190	S1E	4	1-CN-L190-S1E-4"	CHEMICAL CLEANING CONN.	1-CN-L160	M6-CN-00130	M6-CN-00130	N	N	-	Vapour	1.25	3.5	109.3	177.0	NNF
1	CN	L	191	S1E	4	1-CN-L191-S1E-4"	CHEMICAL CLEANING CONN.	1-CN-L161	M6-CN-00130	M6-CN-00130	N	N	-	Vapour	1.25	3.5	109.3	177.0	NNF
1	CN	L	221	S1E	24	1-CN-L221-S1E-24"	1-CN-L106	MP-102B, 1-CN-L273	M6-CN-00030	M6-CN-00030	Y	ET	1	Liquid	3.47	9.1	53.9	80.0	
1	CN	L	222	S1E	16	1-CN-L222-S1E-16"	MP-102A, 1-CN-L223	ME-101, 1-CN-L262, 1-CN-L226, 1-CN-L326	M6-CN-00030	M6-CN-00030	Y	ET	1	Liquid	3.47	9.1	53.9	80.0	
1	CN	L	223	S1E	16	1-CN-L223-S1E-16"	MP-102B, 1-CN-L274	1-CN-L222, 1-CN-L274	M6-CN-00030	M6-CN-00030	Y	ET	1	Liquid	3.47	9.1	53.9	80.0	
1	CN	L	226	S1E	6	1-CN-L226-S1E-6"	1-CN-L222	1-CN-L414	M6-CN-00030	M6-CN-00080	Y	ET	1	Liquid	3.47	17.7	53.9	120.0	
1	CN	L	232	S1E	6	1-CN-L232-S1E-6"	MP-104A/B	1-CN-L414		M6-CN-00080	Y	ET	1	Liquid	3.47	17.7	53.9	120.0	
1	CN	L	233	S1E	6	1-CN-L233-S1E-6"	1-CN-L384, 1-CN-L-354	1-QG-L666	M6-CN-00140	M6-CN-00020	N	N	-			0.1		100.0	NNF, NO POCKETS
1	CN	L	234	S1E	6	1-CN-L234-S1E-6"	MV-202	MP-101A, 1-CN-L235, 1-CN-L291	M6-CN-00140	M6-CN-00140	Y	ET	1	Liquid	1.08	11.2	48.7	105.0	
1	CN	L	235	S1E	6	1-CN-L235-S1E-6"	1-CN-L234	MP-101B, 1-CN-L294	M6-CN-00140	M6-CN-00140	Y	ET	1	Liquid	1.08	11.2	48.7	105.0	
1	CN	L	237	S1E	4	1-CN-L237-S1E-4"	MP-107B	1-CN-L323, 1CN-L325, 1-CN-L295	M6-CN-00140	M6-CN-00140	Y	ET	1	Liquid	4.53	11.2	48.8	105.0	
1	CN	L	238	S1E	4	1-CN-L238-S1E-4"	1-CN-L323	1-WP-L017	M6-CN-00140	M6-WP-00010	Y	ET	1	Liquid	4.53	6	48.8	80.0	
1	CN	L	239	S1E	10	1-CN-L239-S1E-10"	1-CN-L762	1-CN-L173	M6-CN-00170	M6-CN-00170	Y	ET	1	Liquid	1.60	3.5	131.0	160.0	MIN FLOW
1	CN	L	241	S1E	8	1-CN-L241-S1E-8"	1-CN-L394	1-CN-L750	M6-CN-00040	M6-CN-00040	Y	ET	1	Liquid	0.07	0.1	52.1	100.0	MIN FLOW
1	CN	L	244	S1E	1	1-CN-L244-S1E-1"	1-CN-L391, 1-CN-L252	1-CN-L282	M6-CN-00040	M6-CN-00040	Y	ET	1			0.1		80.0	NNF
1	CN	L	245	S1E	24	1-CN-L245-S1E-24"	1-CN-L103	1-CN-L386	M6-CN-00040	M6-CN-00040	Y	ET	1	Liquid	0.07	0.1	52.1	100.0	
1	CN	L	246	S3E	14	1-CN-L246-S3E-14"	MP-124A/B	1-CN-L247		M6-CN-00040	Y	ET	1	Liquid	9.73	20.8	52.2	100.0	
1	CN	L	247	S3E	14	1-CN-L247-S3E-14"	MP-101A, 1-CN-L246	MF-102A/B, SAMPLING SYSTEM, 1-CN-L387, 1-CN-L393	M6-CN-00040	M6-CN-00040	Y	ET	1	Liquid	9.73	20.8	52.2	100.0	
1	CN	L	248	S3E	14	1-CN-L248-S3E-14"	MP-101B	1-CN-L247, 1-CN-L388, 1-CN-L394	M6-CN-00040	M6-CN-00040	Y	ET	1	Liquid	9.73	20.8	52.2	100.0	
1	CN	L	251	S1E	30	1-CN-L251-S1E-30"	1-CN-L140	1-CN-L377	M6-CN-00170	M6-CN-00170	Y	ET	1	Liquid	1.60	3.5	131.0	160.0	
1	CN	L	252	S1E	1	1-CN-L252-S1E-1"	1-CN-L389	1-CN-L244	M6-CN-00040	M6-CN-00040	Y	ET	1			0.1		80.0	NNF
1	CN	L	253	S3E	20	1-CN-L253-S3E-20"	MP-105B	1-CN-L255, 1-CN-L763	M6-CN-00170	M6-CN-00170	Y	ET	1	Liquid	5.39	17.7	131.1	160.0	
1	CN	L	254	S3E	20	1-CN-L254-S3E-20"	1-CN-L255	MF-105B, 1-CN-L255	M6-CN-00170	M6-CN-00170	Y	ET	1	Liquid	5.39	17.7	131.1	160.0	
1	CN	L	255	S3E	20	1-CN-L255-S3E-20"	MP-105A, 1-CN-L253, 1-CN-L254	MF-105A, 1-CN-L254, 1-CN-L762, 1-CN-L298, 1-CN-L256, 1-CN-L258	M6-CN-00170	M6-CN-00170	Y	ET	1	Liquid	5.39	17.7	131.1	160.0	
1	CN	L	256	S3E	18	1-CN-L256-S3E-18"	1-CN-L255, 1-CN-L760	ME-107	M6-CN-00170	M6-CN-00100	Y	ET	1	Liquid	5.39	17.7	131.1	160.0	
1	CN	L	258	S3E	4	1-CN-L258-S3E-4"	1-CN-L255	MS-102	M6-CN-00170	M6-CN-00180	Y	ET	1	Mixed	5.40	17.7	131.1	160.0	
1	CN	L	259	S1E	0.5	1-CN-L259-S1E-0.5"	MS-103	MS-102	M6-CN-00190	M6-CN-00180	Y	ET	1	Mixed	2.12	4.6	48.9	80.0	CHEMICAL DOSING
1	CN	L	260	S1E	1	1-CN-L260-S1E-1"	1-CN-L388, 1-CN-L283	DRAINS	M6-CN-00040	M6-XW-00001	Y	ET	1			0.1		80.0	NNF
1	CN	L	262	S1E	8	1-CN-L262-S1E-8"	CHEMICAL CLEANING CONN.	1-CN-L222	M6-CN-00030	M6-CN-00030	Y	ET	1	Liquid	3.47	9.1	53.9	80.0	NNF
1	CN	L	264	S1E	2	1-CN-L264-S1E-2"	MS-102	RESIDUE TO TANKER CONNECTION	M6-CN-00180		Y	ET	1	Mixed	4.12	17.7	150.0	160.0	INTERMITTENT
1	CN	L	265	S1E	10	1-CN-L265-S1E-10"	1-CN-L142, 1-CN-L307	ME-110A	M6-CN-00150	M6-CN-00150	Y	ET	1	Liquid	1.60	4	128.4	270.0	
1	CN	L	266	S1E	10	1-CN-L266-S1E-10"	1-CN-L143, 1CN-L311	ME-110C	M6-CN-00150	M6-CN-00150	Y	ET	1	Liquid	1.60	4	128.4	270.0	
1	CN	L	267	S1E	2	1-CN-L267-S1E-2"	TRUCK FILL CONNECTION	MS-103	M6-CN-00190	M6-CN-00190	N	N	-			0.04		80.0	NNF
1	CN	L	269	S1E	8	1-CN-L269-S1E-8"	CHEMICAL CLEANING CONN.	1-CN-L107	M6-CN-00030	M6-CN-00030	Y	ET	1	Liquid	2.43	9.1	37.6	80.0	NNF
1	CN	L	270	S1E	1	1-CN-L270-S1E-1"	1-CN-L106, 1-CN-L272, 1-CN-273	DRAINS	M6-CN-00030	M6-XW-00001	Y	ET	1	Liquid	3.47	9.1	53.9	80.0	NNF
1	CN	L	272	S1E	1	1-CN-L272-S1E-1"	MP-102A	1-CN-L270	M6-CN-00030	M6-CN-00030	Y	ET	1	Liquid	3.47	9.1	53.9	80.0	NNF
1	CN	L	273	S1E	1	1-CN-L273-S1E-1"	1-CN-L221, 1-CN-L275	1-CN-L270	M6-CN-00030	M6-CN-00030	Y	ET	1	Liquid	3.47	9.1	53.9	80.0	NNF
1	CN	L	274	S1E	1	1-CN-L274-S1E-1"	1-CN-L223	1-CN-L326	M6-CN-00030	M6-CN-00030	Y	ET	1	Liquid	3.47	9.1	53.9	80.0	NNF
1	CN	L	275	S1E	1	1-CN-L275-S1E-1"	MP-102B	1-CN-L273	M6-CN-00030	M6-CN-00030	Y	ET	1	Liquid	3.47	9.1	53.9	80.0	NNF
1	CN	L	280	S1E	2	1-CN-L280-S1E-2"	MS-102	DRAINS	M6-CN-00180	M6-XW-00002	Y	ET	1			0.1		80.0	NNF
1	CN	L	282	S1E	1	1-CN-L282-S1E-1"	1-CN-L392, 1-CN-L284, 1CN-L244	DRAINS	M6-CN-00040	M6-XW-00001	Y	ET	1			0.1		80.0	NNF
1	CN	L	283	S1E	1	1-CN-L283-S1E-1"	1-CN-L387	1-CN-L260	M6-CN-00040	M6-CN-00040	Y	ET	1			0.1		80.0	NNF
1	CN	L	284	S1E	1	1-CN-L284-S1E-1"	1-CN-L390	1-CN-L282	M6-CN-00040	M6-CN-00040	Y	ET	1			0.1		80.0	NNF

Line Designation Table
FEED Study for Carbon Capture Plant Retrofit
Job No.: 26301
Document No.: 26031-000-M0X-0000-00002
Rev. No.: 00

Unit	Bechtel System Code	Comm Group Code	Seq No.	Line Class	Dia (inches)	Line Number	From	To	P&ID From	P&ID To	Insulated (Y/N)	Heat Trace	Insulation Thickness (in)	Phase	Operating Press (Barg)	Design Press (Barg)	Operating Temp (Deg C)	Design Temp (Deg C)	Remarks
1	CN	L	291	S1E	1	1-CN-L291-S1E-1"	1-CN-L234, 1-CN-L293, 1-CN-L294	DRAINS	M6-CN-00140	M6-XW-00001	Y	ET	1			0.1		80.0	NNF
1	CN	L	292	S1E	1	1-CN-L292-S1E-1"	1-CN-L323	1-CN-L295	M6-CN-00140	M6-CN-00140	Y	ET	1	Liquid	4.53	11.2	48.8	105.0	NNF
1	CN	L	293	S1E	1	1-CN-L293-S1E-1"	MP-107A	1-CN-L291	M6-CN-00140	M6-CN-00140	Y	ET	1			0.1		80.0	NNF
1	CN	L	294	S1E	1	1-CN-L294-S1E-1"	1-CN-L235, 1-CN-L296	1-CN-L291	M6-CN-00140	M6-CN-00140	Y	ET	1			0.1		80.0	NNF
1	CN	L	295	S1E	1	1-CN-L295-S1E-1"	1-CN-L237	DRAINS	M6-CN-00140	M6-XW-00001	Y	ET	1	Liquid	4.53	11.2	48.8	105.0	NNF
1	CN	L	296	S1E	1	1-CN-L296-S1E-1"	MP-107B	1-CN-L294	M6-CN-00140	M6-CN-00140	Y	ET	1			0.1		80.0	NNF
1	CN	L	297	S1E	1	1-CN-L297-S1E-1"	1-CN-L376, 1-CN-L299, 1-CN-L300	DRAINS	M6-CN-00170	M6-XW-00001	Y	ET	1			0.1		80.0	NNF
1	CN	L	298	S1E	1	1-CN-L298-S1E-1"	1-CN-L255	1-CN-L301	M6-CN-00170	M6-CN-00170	Y	ET	1			0.1		80.0	NNF
1	CN	L	299	S1E	1	1-CN-L299-S1E-1"	1-CN-L380	1-CN-L297	M6-CN-00170	M6-CN-00170	Y	ET	1			0.1		80.0	NNF
1	CN	L	300	S1E	1	1-CN-L300-S1E-1"	1-CN-L377, 1-CN-L302	1-CN-L297	M6-CN-00170	M6-CN-00170	Y	ET	1			0.1		80.0	NNF
1	CN	L	301	S1E	1	1-CN-L301-S1E-1"	1-CN-L253, 1-CN-L298	DRAINS	M6-CN-00170	M6-XW-00001	Y	ET	1			0.1		80.0	NNF
1	CN	L	302	S1E	1	1-CN-L302-S1E-1"	1-CN-L382	1-CN-L300	M6-CN-00170	M6-CN-00170	Y	ET	1			0.1		80.0	
1	CN	L	303	S1E	1	1-CN-L303-S1E-1"	MF-105A, 1-CN-L304, 1-CN-L305, 1-CN-L306	DRAINS	M6-CN-00170	M6-CN-00170	Y	ET	1			0.1		80.0	NNF
1	CN	L	304	S1E	1	1-CN-L304-S1E-1"	1-CN-L329	1-CN-L303	M6-CN-00170	M6-CN-00170	Y	ET	1			0.1		80.0	NNF
1	CN	L	305	S1E	1	1-CN-L305-S1E-1"	MF-105B	1-CN-L303	M6-CN-00170	M6-CN-00170	Y	ET	1			0.1		80.0	NNF
1	CN	L	306	S1E	1	1-CN-L306-S1E-1"	1-CN-L330	1-CN-L303	M6-CN-00170	M6-CN-00170	Y	ET	1			0.1		80.0	NNF
1	CN	L	307	S1E	4	1-CN-L307-S1E-4"	CHEMICAL CLEANING CONN.	1-CN-L265	M6-CN-00150	M6-CN-00150	Y	ET	1	Liquid	1.60	4	128.4	270.0	NNF
1	CN	L	308	S1E	4	1-CN-L308-S1E-4"	CHEMICAL CLEANING CONN.	1-CN-L372	M6-CN-00150	M6-CN-00150	Y	ET	1	Mixed	1.60	4	131.0	270.0	NNF
1	CN	L	309	S1E	4	1-CN-L309-S1E-4"	CHEMICAL CLEANING CONN.	1-CN-L164	M6-CN-00150	M6-CN-00150	Y	ET	1	Liquid	1.60	4	128.4	270.0	NNF
1	CN	L	310	S1E	4	1-CN-L310-S1E-4"	CHEMICAL CLEANING CONN.	1-CN-L168	M6-CN-00150	M6-CN-00150	Y	ET	1	Mixed	1.60	4	131.0	270.0	NNF
1	CN	L	311	S1E	4	1-CN-L311-S1E-4"	CHEMICAL CLEANING CONN.	1-CN-L266	M6-CN-00150	M6-CN-00150	Y	ET	1	Liquid	1.60	4	128.4	270.0	NNF
1	CN	L	312	S1E	4	1-CN-L312-S1E-4"	CHEMICAL CLEANING CONN.	1-CN-L373	M6-CN-00150	M6-CN-00150	Y	ET	1	Mixed	1.60	4	131.0	270.0	NNF
1	CN	L	313	S1E	4	1-CN-L313-S1E-4"	CHEMICAL CLEANING CONN.	1-CN-L165	M6-CN-00150	M6-CN-00150	Y	ET	1	Liquid	1.60	4	128.4	270.0	NNF
1	CN	L	314	S1E	4	1-CN-L314-S1E-4"	CHEMICAL CLEANING CONN.	1-CN-L169	M6-CN-00150	M6-CN-00150	Y	ET	1	Mixed	1.60	4	131.0	270.0	NNF
1	CN	L	323	S1E	4	1-CN-L323-S1E-4"	MP-107A, 1-CN-L237	1-CN-L153, 1-CN-L238, 1-CN-L324, 1-CN-L292	M6-CN-00140	M6-CN-00140	Y	ET	1	Liquid	4.53	11.2	48.8	105.0	
1	CN	L	324	S1E	3	1-CN-L324-S1E-3"	1-CN-L323, 1-CN-L325	MV-202	M6-CN-00140	M6-CN-00140	Y	ET	1	Liquid	4.53	11.2	48.8	105.0	MIN FLOW
1	CN	L	325	S1E	3	1-CN-L325-S1E-3"	1-CN-L237	1-CN-L324	M6-CN-00140	M6-CN-00140	Y	ET	1	Liquid	4.53	11.2	48.8	105.0	MIN FLOW
1	CN	L	326	S1E	1	1-CN-L326-S1E-1"	1-CN-L222	DRAINS	M6-CN-00030	M6-XW-00001	Y	ET	1	Liquid	3.47	9.1	53.9	80.0	NNF
1	CN	L	329	S3E	0.75	1-CN-L329-S3E-0.75"	MF-105A	1-CN-L304	M6-CN-00170	M6-CN-00170	Y	ET	1	Liquid	5.39	17.7	131.1	160.0	PSV INLET
1	CN	L	330	S3E	0.75	1-CN-L330-S3E-0.75"	MF-105B	1-CN-L306	M6-CN-00170	M6-CN-00170	Y	ET	1	Liquid	5.39	17.7	131.1	160.0	PSV INLET
1	CN	L	331	S3E	0.75	1-CN-L331-S3E-0.75"	MF-102A	1-CN-L333	M6-CN-00040	M6-CN-00040	Y	ET	1			20.8		100.0	PSV INLET
1	CN	L	332	S1E	1	1-CN-L332-S1E-1"	MF-102A	1-CN-L333	M6-CN-00040	M6-CN-00040	Y	ET	1			0.1		80.0	NNF
1	CN	L	333	S1E	1	1-CN-L333-S1E-1"	1-CN-L331, 1-CN-L332	DRAINS	M6-CN-00040	M6-XW-00001	Y	ET	1			0.1		80.0	NNF
1	CN	L	339	S1E	0.75	1-CN-L339-S1E-0.75"	1-CN-L107	1-WP-L263	M6-CN-00030	M6-CN-00030	Y	ET	1	Liquid	2.43	9.1	37.6	80.0	PSV INLET
1	CN	L	340	S1E	1	1-CN-L340-S1E-1"	1-CN-L364	DRAINS	M6-CN-00150	M6-XW-00001	Y	ET	1			0.1		80.0	NNF
1	CN	L	344	S1E	8	1-CN-L344-S1E-8"	MS-102	1-QG-L666	M6-CN-00180	M6-CN-00020	N	N	-			0.1		100.0	NNF, SLOPED, NO POCKETS
1	CN	L	347	S1E	1	1-CN-L347-S1E-1"	1-CN-L365	DRAINS	M6-CN-00150	M6-XW-00001	Y	ET	1			0.1		80.0	NNF
1	CN	L	348	S1E	1	1-CN-L348-S1E-1"	1-CN-L366	DRAINS	M6-CN-00150	M6-XW-00001	Y	ET	1			0.1		80.0	NNF
1	CN	L	349	S1E	1	1-CN-L349-S1E-1"	1-CN-L367	DRAINS	M6-CN-00150	M6-XW-00001	Y	ET	1			0.1		80.0	NNF
1	CN	L	354	S1E	4	1-CN-L354-S1E-4"	1-CN-L-384	1-CN-L233	M6-CN-00140	M6-CN-00140	N	N	-	Vapour	1.08	3.5	48.7	105.0	NNF, BYPASS
1	CN	L	355	S3E	20	1-CN-L355-S3E-20"	MF-102B, 1-CN-L363	1-CN-L470	M6-CN-00040	M6-CN-00040	Y	ET	1	Liquid	9.73	20.8	52.2	100.0	
1	CN	L	363	S3E	20	1-CN-L363-S3E-20"	MF-102	1-CN-L355	M6-CN-00040	M6-CN-00040	Y	ET	1	Liquid	9.73	20.8	52.2	100.0	
1	CN	L	364	S1E	0.75	1-CN-L364-S1E-0.75"	1-CN-L372	1-CN-L340	M6-CN-00150	M6-CN-00150	Y	ET	1	Mixed	1.60	4	131.0	270.0	PSV INLET
1	CN	L	365	S1E	0.75	1-CN-L365-S1E-0.75"	1-CN-L168	1-CN-L347	M6-CN-00150	M6-CN-00150	Y	ET	1	Mixed	1.60	4	131.0	270.0	PSV INLET
1	CN	L	366	S1E	0.75	1-CN-L366-S1E-0.75"	1-CN-L373	1-CN-L348	M6-CN-00150	M6-CN-00150	Y	ET	1	Mixed	1.60	4	131.0	270.0	PSV INLET
1	CN	L	367	S1E	0.75	1-CN-L367-S1E-0.75"	1-CN-L367	1-CN-L349	M6-CN-00150	M6-CN-00150	Y	ET	1	Mixed	1.60	4	131.0	270.0	PSV INLET
1	CN	L	372	S1E	34	1-CN-L372-S1E-34"	ME-110A, 1-CN-L308	1-CN-L135, 1-CN-L364	M6-CN-00150	M6-CN-00150	Y	ET	1	Mixed	1.60	4	131.0	270.0	
1	CN	L	373	S1E	34	1-CN-L373-S1E-34"	ME-110C, 1-CN-L312	1-CN-L136, 1-CN-L366	M6-CN-00150	M6-CN-00150	Y	ET	1	Mixed	1.60	4	131.0	270.0	
1	CN	L	376	S3E	30	1-CN-L376-S3E-30"	1-CN-L140	MP-105A, 1-CN-L297	M6-CN-00170	M6-CN-00170	Y	ET	1	Liquid	1.60	17.7	131.0	160.0	
1	CN	L	377	S3E	30	1-CN-L377-S3E-30"	1-CN-L251	MP-105B, 1-CN-L300	M6-CN-00170	M6-CN-00170	Y	ET	1	Liquid	1.60	17.7	131.0	160.0	
1	CN	L	380	S3E	1	1-CN-L380-S3E-1"	MP-105A	1-CN-L299	M6-CN-00170	M6-CN-00170	Y	ET	1	Liquid	5.39	17.7	131.1	160.0	NNF
1	CN	L	382	S3E	1	1-CN-L382-S3E-1"	MP-105B	1-CN-L302	M6-CN-00170	M6-CN-00170	Y	ET	1	Liquid	5.39	17.7	131.1	160.0	
1	CN	L	384	S1E	4	1-CN-L384-S1E-4"	MV-202, 1-CN-L354	1-CN-L233	M6-CN-00140	M6-CN-00140	N	N	-	Vapour	1.08	3.5	48.7	105.0	PSV INLET
1	CN	L	385	S3E	24	1-CN-L385-S3E-24"	1-CN-L103	MP-101A, 1-CN-L392	M6-CN-00040	M6-CN-00040	Y	ET	1	Liquid	0.07	20.8	52.1	100.0	
1	CN	L	386	S3E	24	1-CN-L386-S3E-24"	1-CN-L245	MP-101B	M6-CN-00040	M6-CN-00040	Y	ET	1	Liquid	0.07	20.8	52.1	100.0	
1	CN	L	387	S3E	1	1-CN-L387-S3E-1"	1-CN-L247	1-CN-L283	M6-CN-00040	M6-CN-00040	Y	ET	1			20.8		100.0	NNF
1	CN	L	388	S3E	1	1-CN-L388-S3E-1"	1-CN-L248	1-CN-L260	M6-CN-00040	M6-CN-00040	Y	ET	1			20.8		100.0	NNF
1	CN	L	389	S3E	1	1-CN-L389-S3E-1"	MP-101B	1-CN-L252	M6-CN-00040	M6-CN-00040	Y	ET	1			20.8		100.0	NNF
1	CN	L	390	S3E	1	1-CN-L390-S3E-1"	MP-101A	1-CN-L284	M6-CN-00040	M6-CN-00040	Y	ET	1			20.8		100.0	NNF

Line Designation Table
FEED Study for Carbon Capture Plant Retrofit
Job No.: 26301
Document No.: 26031-000-M0X-0000-00002
Rev. No.: 00

Unit	Bechtel System Code	Comm Group Code	Seq No.	Line Class	Dia (inches)	Line Number	From	To	P&ID From	P&ID To	Insulated (Y/N)	Heat Trace	Insulation Thickness (in)	Phase	Operating Press (Barg)	Design Press (Barg)	Operating Temp (Deg C)	Design Temp (Deg C)	Remarks
1	CN	L	391	S3E	1	1-CN-L391-S3E-1"	1-CN-L386	1-CN-L244	M6-CN-00040	M6-CN-00040	Y	ET	1			20.8		100.0	NNF
1	CN	L	392	S3E	1	1-CN-L392-S3E-1"	1-CN-L385	1-CN-L282	M6-CN-00040	M6-CN-00040	Y	ET	1	Liquid	0.07	20.8	52.1	100.0	NNF
1	CN	L	393	S3E	8	1-CN-L393-S3E-8"	1-CN-L247	1-CN-L750	M6-CN-00040	M6-CN-00040	Y	ET	1	Liquid	9.73	20.8	52.2	100.0	MIN FLOW
1	CN	L	394	S3E	8	1-CN-L394-S3E-8"	1-CN-L248	1-CN-L241	M6-CN-00040	M6-CN-00040	Y	ET	1	Liquid	9.73	20.8	52.2	100.0	MIN FLOW
1	CN	L	403	S3E	10	1-CN-L403-S3E-10"	1-CN-L680, 1-CN-L683, 1-CN-L502, 1-CN-L754	ME-107	M6-CN-00085	M6-CN-00100	Y	ET	1	Liquid	8.69	20.8	109.5	140.0	
1	CN	L	404	S3E	10	1-CN-L404-S3E-10"	ME-107, 1-CN-L755, 1-CN-L465, 1-CN-L756	ME-109, 1-CN-L459	M6-CN-00100	M6-CN-00100	Y	ET	1	Liquid	7.66	20.8	113.3	145.0	
1	CN	L	405	S3E	10	1-CN-L405-S3E-10"	ME-109, 1-CN-L463	1-CN-L700, 1-CN-L466, 1-CN-L757	M6-CN-00100	M6-CN-00110	Y	ET	1	Liquid	6.62	20.8	122.8	155.0	
1	CN	L	406	S1E	14	1-CN-L406-S1E-14"	MV-201	1-CN-L493, 1-CN-L495	M6-CN-00110	M6-CN-00110	Y	ET	1	Liquid	1.56	4	115.0	145.0	
1	CN	L	407	S1E	10	1-CN-L407-S1E-10"	1-CN-L494, 1-CN-L496	1-CN-L679, 1-CN-L684, 1-CN-L691, SAMPLING PANEL	M6-CN-00110	M6-CN-00085	Y	ET	1	Liquid	5.00	11	115.1	145.0	
1	CN	L	411	S3E	18	1-CN-L411-S3E-18"	ME-107, 1-CN-L450	ME-108A-H, 1-CN-L564	M6-CN-00100	M6-CN-00100	Y	ET	1	Liquid	4.70	17.7	130.1	160.0	
1	CN	L	412	S3E	18	1-CN-L412-S3E-18"	1-CN-L562,1-CN-L530, 1-CN-L1649, 1-CN-L564	ME-102	M6-CN-00080	M6-CN-00080	Y	ET	1	Liquid	4.01	17.7	57.5	160.0	
1	CN	L	413	S3E	18	1-CN-L413-S3E-18"	ME-102, 1-CN-L577, TEMP ANTI-FOAM INJECTION SKID	1-CN-L476, 1-CN-L474, 1-CN-L648	M6-CN-00080	M6-CN-00080	Y	ET	1	Liquid	4.01	17.7	57.5	120.0	
1	CN	L	414	S1E	6	1-CN-L414-S1E-6"	1-WP-L010, 1-CN-L232, 1-CN-L226	1-CN-L413	M6-CN-00080	M6-CN-00080	Y	ET	1	Liquid	3.47	17.7	53.9	120.0	
1	CN	L	417	S3E	8	1-CN-L417-S3E-8"	1-CN-L476	TEMP GAC FILTER	M6-CN-00080	M6-CN-00080	Y	ET	1	Liquid	4.01	17.7	57.5	120.0	
1	CN	L	418	S3E	14	1-CN-L418-S3E-14"	1-CN-L470	1-CN-L482, 1-CN-L484, 1-CN-L486, 1-CN-L488	M6-CN-00040	M6-CN-00040	Y	ET	1	Liquid	9.73	20.8	52.2	100.0	
1	CN	L	419	S3E	8	1-CN-L419-S3E-8"	TEMP GAC FILTER	1-CN-L477	M6-CN-00080	M6-CN-00080	Y	ET	1	Liquid	2.98	17.7	49.1	120.0	
1	CN	L	423	S3E	14	1-CN-L423-S3E-14"	1-CN-L477	1-CN-L101, 1-CN-L425	M6-CN-00080	M6-CN-00010	Y	ET	1	Liquid	2.98	17.7	49.1	120.0	
1	CN	L	425	S3E	14	1-CN-L425-S3E-14"	1-CN-L423	T-102	M6-CN-00080		Y	ET	1	Liquid	2.98	17.7	49.1	120.0	
1	CN	L	426	S1E	10	1-CN-L426-S1E-10"	MV-201	T-103	M6-CN-00110	M6-CN-00120	Y	ET	1	Vapour	1.56	4	115.0	145.0	
1	CN	L	446	S3E	0.75	1-CN-L446-S3E-0.75"	1-CN-L256	1-CN-L447	M6-CN-00100	M6-CN-00100	Y	ET	1	Liquid	5.39	17.7	131.1	160.0	PSV INLET
1	CN	L	447	S1E	1	1-CN-L447-S1E-1"	1-CN-L446	DRAINS	M6-CN-00100	M6-XW-00001	Y	ET	1			0.1		80.0	
1	CN	L	448	S3E	18	1-CN-L448-S3E-18"	1-CN-L256	1-CN-L411	M6-CN-00100	M6-CN-00100	Y	ET	1	Liquid	4.70	17.7	130.1	160.0	
1	CN	L	449	S1E	3	1-CN-L449-S1E-3"	CHEMICAL CLEANING CONN.	1-CN-L760	M6-CN-00100	M6-CN-00100	Y	ET	1			10		80.0	NNF
1	CN	L	450	S3E	3	1-CN-L450-S3E-3"	1-CN-L689	1-CN-L411	M6-CN-00100	M6-CN-00100	Y	ET	1	Liquid	4.70	17.7	126.1	160.0	
1	CN	L	458	S1E	6	1-CN-L458-S1E-6"	1-CN-L494, 1-CN-L490	MV-201	M6-CN-00110	M6-CN-00110	Y	ET	1	Liquid	1.56	4	115.0	145.0	MIN FLOW
1	CN	L	459	S3E	0.75	1-CN-L459-S3E-0.75"	1-CN-L404	1-CN-L460	M6-CN-00100	M6-CN-00100	Y	ET	1	Liquid	7.66	20.8	113.3	145.0	PSV INLET
1	CN	L	460	S1E	1	1-CN-L460-S1E-1"	1-CN-L459	DRAINS	M6-CN-00100	M6-XW-00001	Y	ET	1			0.1		80.0	NNF
1	CN	L	461	S1E	3	1-CN-L461-S1E-3"	CHEMICAL CLEANING CONN.	1-CN-L755	M6-CN-00100	M6-CN-00100	Y	ET	1			10		80.0	NNF
1	CN	L	462	S1E	3	1-CN-L462-S1E-3"	CHEMICAL CLEANING CONN.	1-CN-L757	M6-CN-00100	M6-CN-00100	Y	ET	1			10		80.0	NNF
1	CN	L	463	S3E	10	1-CN-L463-S3E-10"	1-CN-L403	1-CN-L465, 1-CN-L405	M6-CN-00100	M6-CN-00100	Y	ET	1	Liquid	8.69	20.8	109.5	155.0	NNF
1	CN	L	465	S3E	10	1-CN-L465-S3E-10"	1-CN-L463	1-CN-L404	M6-CN-00100	M6-CN-00100	Y	ET	1	Liquid	8.69	20.8	109.5	145.0	NNF
1	CN	L	466	S3E	0.75	1-CN-L466-S3E-0.75"	1-CN-L405	1-CN-L467	M6-CN-00100	M6-CN-00100	Y	ET	1	Liquid	6.62	20.8	122.8	155.0	PSV INLET
1	CN	L	467	S1E	1	1-CN-L467-S1E-1"	1-CN-L466	DRAINS	M6-CN-00100	M6-XW-00001	Y	ET	1			0.1		80.0	NNF
1	CN	L	468	S1E	3	1-CN-L468-S1E-3"	CHEMICAL CLEANING CONN.	1-CN-L754	M6-CN-00100	M6-CN-00100	Y	ET	1			10		80.0	NNF
1	CN	L	469	S1E	3	1-CN-L469-S1E-3"	CHEMICAL CLEANING CONN.	1-CN-L756	M6-CN-00100	M6-CN-00100	Y	ET	1			10		80.0	NNF
1	CN	L	470	S3E	18	1-CN-L470-S3E-18"	1-CN-L355	1-CN-L499, 1-CN-L563, 1-CN-L418, 1CN-L478, 1-CN-L472	M6-CN-00040	M6-CN-00040	Y	ET	1	Liquid	9.73	20.8	52.2	100.0	
1	CN	L	472	S3E	8	1-CN-L472-S3E-8"	1-CN-L470	1-CN-L473	M6-CN-00040	M6-CN-00040	Y	ET	1	Liquid	9.73	20.8	52.2	100.0	NNF - DRAIN TO TANK
1	CN	L	473	S1E	8	1-CN-L473-S1E-8"	1-CN-L472	MT-101	M6-CN-00040	M6-CY-00010	Y	ET	1			0.04		80.0	NNF - DRAIN TO TANK
1	CN	L	474	S3E	0.75	1-CN-L474-S3E-0.75"	1-CN-L413	1-CN-1475	M6-CN-00080	M6-CN-00080	Y	ET	1	Liquid	4.01	17.7	57.5	120.0	PSV INLET
1	CN	L	475	S1E	1	1-CN-L475-S1E-1"	1-CN-L474	DRAINS	M6-CN-00080	M6-XW-00001	Y	ET	1			0.1		80.0	NNF
1	CN	L	476	S3E	16	1-CN-L476-S3E-16"	1-CN-L413	1-CN-L477, 1-CN-L417	M6-CN-00080	M6-CN-00080	Y	ET	1	Liquid	2.98	17.7	49.1	120.0	
1	CN	L	477	S3E	18	1-CN-L477-S3E-18"	1-CN-L476, 1-CN-L419	1-CN-L423, 1-CN-L687	M6-CN-00080	M6-CN-00080	Y	ET	1	Liquid	2.98	17.7	49.1	120.0	
1	CN	L	478	S3E	14	1-CN-L478-S3E-14"	1-CN-L470	1-CN-L1481, 1-CN-L1548, 1-CN-L1550, 1-CN-L1552	M6-CN-00040	M6-CN-00040	Y	ET	1	Liquid	9.73	20.8	52.2	100.0	
1	CN	L	479	S1E	12	1-CN-L479-S1E-12"	CHEMICAL CLEANING CONN.	1-CN-1648	M6-CN-00080	M6-CN-00080	Y	ET	1		1.00	10	80.0	80.0	NNF
1	CN	L	481	S3E	8	1-CN-L481-S3E-8"	1-CN-L1478	ME-108E	M6-CN-00040		Y	ET	1	Liquid	9.73	20.8	52.2	100.0	
1	CN	L	482	S3E	8	1-CN-L482-S3E-8"	1-CN-L1418	ME-108A	M6-CN-00040	M6-CN-00081	Y	ET	1	Liquid	9.73	20.8	52.2	100.0	
1	CN	L	483	S3E	8	1-CN-L483-S3E-8"	ME-108A, 1-CN-L584	1-CN-L487, 1-CN-L536	M6-CN-00081	M6-CN-00081	Y	ET	1	Liquid	8.69	20.8	120.7	160.0	
1	CN	L	484	S3E	8	1-CN-L484-S3E-8"	1-CN-L1418	ME-108B	M6-CN-00040	M6-CN-00081	Y	ET	1	Liquid	9.73	20.8	52.2	100.0	
1	CN	L	485	S3E	8	1-CN-L485-S3E-8"	ME-108B, 1-CN-L587	1-CN-L487, 1-CN-L538	M6-CN-00081	M6-CN-00081	Y	ET	1	Liquid	8.69	20.8	120.7	160.0	
1	CN	L	486	S3E	8	1-CN-L486-S3E-8"	1-CN-L1418	ME-108C	M6-CN-00040		Y	ET	1	Liquid	9.73	20.8	52.2	100.0	
1	CN	L	487	S3E	14	1-CN-L487-S3E-14"	ME-108C, 1-CN-L483, 1-CN-L485, 1-CN-L489	1-CN-L666		M6-CN-00081	Y	ET	1	Liquid	8.69	20.8	120.7	160.0	
1	CN	L	488	S3E	8	1-CN-L488-S3E-8"	1-CN-L1418	ME-108D	M6-CN-00040		Y	ET	1	Liquid	9.73	20.8	52.2	100.0	
1	CN	L	489	S3E	8	1-CN-L489-S3E-8"	ME-108D	1-CN-L487		M6-CN-00081	Y	ET	1	Liquid	8.69	20.8	120.7	160.0	
1	CN	L	490	S1E	6	1-CN-L490-S1E-6"	1-CN-L496	1-CN-L458	M6-CN-00110	M6-CN-00110	Y	ET	1	Liquid	1.56	4	115.0	145.0	MIN FLOW
1	CN	L	493	S1E	14	1-CN-L493-S1E-14"	1-CN-L406	MP-106A, 1-CN-L643	M6-CN-00110	M6-CN-00110	Y	ET	1	Liquid	1.56	4	115.0	145.0	
1	CN	L	494	S1E	10	1-CN-L494-S1E-10"	MP-106A	1-CN-L407, 1-CN-L458, 1-CN-L498	M6-CN-00110	M6-CN-00110	Y	ET	1	Liquid	5.00	11	115.1	145.0	
1	CN	L	495	S1E	14	1-CN-L495-S1E-14"	1-CN-L406	MP-106B, 1-CN-L645	M6-CN-00110	M6-CN-00110	Y	ET	1	Liquid	1.56	4	115.0	145.0	
1	CN	L	496	S1E	10	1-CN-L496-S1E-10"	MP-106B	1-CN-L407, 1-CN-L269, 1-CN-L642	M6-CN-00110	M6-CN-00110	Y	ET	1	Liquid	5.00	11	115.1	145.0	
1	CN	L	497	S1E	1	1-CN-L497-S1E-1"	MP-106A DRAIN, 1-CN-L650, 1-CN-L645	DRAINS	M6-CN-00110	M6-XW-00001	Y	ET	1			0.1		80.0	NNF

Line Designation Table
FEED Study for Carbon Capture Plant Retrofit
Job No.: 26301
Document No.: 26031-000-M0X-0000-00002
Rev. No.: 00

Unit	Bechtel System Code	Comm Group Code	Seq No.	Line Class	Dia (inches)	Line Number	From	To	P&ID From	P&ID To	Insulated (Y/N)	Heat Trace	Insulation Thickness (in)	Phase	Operating Press (Barg)	Design Press (Barg)	Operating Temp (Deg C)	Design Temp (Deg C)	Remarks
1	CN	L	498	S1E	1	1-CN-L498-S1E-1"	1-CN-L494	DRAINS	M6-CN-00110	M6-XW-00001	Y	ET	1			0.1		80.0	NNF
1	CN	L	499	S3E	10	1-CN-L499-S3E-10"	1-CN-L1470	1-CN-L682, 1-CN-L686	M6-CN-00040	M6-CN-00085	Y	ET	1	Liquid	9.73	20.8	52.2	100.0	
1	CN	L	502	S3E	6	1-CN-L502-S3E-6"	1-CN-L499	1-CN-L403	M6-CN-00085	M6-CN-00085	Y	ET	1	Liquid	9.73	20.8	52.2	100.0	
1	CN	L	520	S3E	2	1-CN-L520-S3E-2"	TEMP ANTI-FOAM INJECTION SKID	1-CN-L413	M6-CN-00080	M6-CN-00080	Y	ET	1	Liquid	4.01	17.7	57.5	120.0	
1	CN	L	522	S3E	8	1-CN-L522-S3E-8"	1-CN-L411, 1-CN-L567	ME-108A	M6-CN-00100	M6-CN-00081	Y	ET	1	Liquid	4.70	17.7	130.1	160.0	
1	CN	L	523	S3E	8	1-CN-L523-S3E-8"	ME-108A	1-CN-L585, 1-CN-L542, 1-CN-L530	M6-CN-00081	M6-CN-00080	Y	ET	1	Liquid	4.01	17.7	57.5	160.0	
1	CN	L	524	S3E	8	1-CN-L524-S3E-8"	1-CN-L411, 1-CN-L589	ME-108B	M6-CN-00100	M6-CN-00081	Y	ET	1	Liquid	4.70	17.7	130.1	160.0	
1	CN	L	525	S3E	8	1-CN-L525-S3E-8"	ME-108B	1-CN-L586, 1-CN-L540, 1-CN-L530	M6-CN-00081	M6-CN-00080	Y	ET	1	Liquid	4.01	17.7	57.5	160.0	
1	CN	L	526	S3E	8	1-CN-L526-S3E-8"	1-CN-L411	ME-108C	M6-CN-00100		Y	ET	1	Liquid	4.70	17.7	130.1	160.0	
1	CN	L	527	S3E	8	1-CN-L527-S3E-8"	ME-108C	1-CN-L530		M6-CN-00080	Y	ET	1	Liquid	4.01	17.7	57.5	160.0	
1	CN	L	528	S3E	8	1-CN-L528-S3E-8"	1-CN-L411	ME-108D	M6-CN-00100		Y	ET	1	Liquid	4.70	17.7	130.1	160.0	
1	CN	L	529	S3E	8	1-CN-L529-S3E-8"	ME-108D	1-CN-L530		M6-CN-00080	Y	ET	1	Liquid	4.01	17.7	57.5	160.0	
1	CN	L	530	S3E	14	1-CN-L530-S3E-14"	1-CN-L523, 1-CN-L525, 1-CN-L527, 1-CN-L529	1-CN-L412	M6-CN-00080	M6-CN-00080	Y	ET	1	Liquid	4.01	17.7	57.5	160.0	
1	CN	L	534	S1E	4	1-CN-L534-S1E-4"	CHEMICAL CLEANING CONN.	1-CN-L585	M6-CN-00081	M6-CN-00081	Y	ET	1			10.0		80.0	NNF
1	CN	L	535	S1E	4	1-CN-L535-S1E-4"	CHEMICAL CLEANING CONN.	1-CN-L584	M6-CN-00081	M6-CN-00081	Y	ET	1			10.0		80.0	NNF
1	CN	L	536	S3E	0.75	1-CN-L536-S3E-0.75"	1-CN-L483	1-CN-L537	M6-CN-00081	M6-CN-00081	Y	ET	1	Liquid	8.69	20.8	120.7	160.0	PSV INLET
1	CN	L	537	S1E	1	1-CN-L537-S1E-1"	1-CN-L536	DRAINS	M6-CN-00081	M6-XW-00001	Y	ET	1			0.1		80.0	NNF
1	CN	L	538	S3E	0.75	1-CN-L538-S3E-0.75"	1-CN-L485	1-CN-L539	M6-CN-00081	M6-CN-00081	Y	ET	1	Liquid	8.69	20.8	120.7	160.0	PSV INLET
1	CN	L	539	S1E	1	1-CN-L539-S1E-1"	1-CN-L538	DRAINS	M6-CN-00081	M6-XW-00001	Y	ET	1			0.1		80.0	NNF
1	CN	L	540	S3E	0.75	1-CN-L540-S3E-0.75"	1-CN-L525	1-CN-L541	M6-CN-00081	M6-CN-00081	Y	ET	1	Liquid	4.01	17.7	57.5	160.0	PSV INLET
1	CN	L	541	S1E	1	1-CN-L541-S1E-1"	1-CN-L540	DRAINS	M6-CN-00081	M6-XW-00001	Y	ET	1			0.1		80.0	NNF
1	CN	L	542	S3E	0.75	1-CN-L542-S3E-0.75"	1-CN-L523	1-CN-L543	M6-CN-00081	M6-CN-00081	Y	ET	1	Liquid	4.01	17.7	57.5	160.0	PSV INLET
1	CN	L	543	S1E	1	1-CN-L543-S1E-1"	1-CN-L542	DRAINS	M6-CN-00081	M6-XW-00001	Y	ET	1			0.1		80.0	NNF
1	CN	L	544	S1E	4	1-CN-L544-S1E-4"	CHEMICAL CLEANING CONN.	1-CN-L705	M6-CN-00081	M6-CN-00081	Y	ET	1			10.0		80.0	NNF
1	CN	L	545	S1E	4	1-CN-L545-S1E-4"	CHEMICAL CLEANING CONN.	1-CN-L667	M6-CN-00081	M6-CN-00081	Y	ET	1			10.0		80.0	NNF
1	CN	L	546	S3E	8	1-CN-L546-S3E-8"	ME-108E	1-CN-L553		M6-CN-00081	Y	ET	1	Liquid	8.69	20.8	120.7	160.0	
1	CN	L	548	S3E	8	1-CN-L548-S3E-8"	1-CN-L1478	ME-108F	M6-CN-00040		Y	ET	1	Liquid	9.73	20.8	52.2	100.0	
1	CN	L	549	S3E	8	1-CN-L549-S3E-8"	ME-108F	1-CN-L553		M6-CN-00081	Y	ET	1	Liquid	8.69	20.8	120.7	160.0	
1	CN	L	550	S3E	8	1-CN-L550-S3E-8"	1-CN-L1478	ME-108G	M6-CN-00040		Y	ET	1	Liquid	9.73	20.8	52.2	100.0	
1	CN	L	551	S3E	8	1-CN-L551-S3E-8"	ME-108G	1-CN-L553		M6-CN-00081	Y	ET	1	Liquid	8.69	20.8	120.7	160.0	
1	CN	L	552	S3E	8	1-CN-L552-S3E-8"	1-CN-L1478	ME-108H	M6-CN-00040		Y	ET	1	Liquid	9.73	20.8	52.2	100.0	
1	CN	L	553	S3E	14	1-CN-L553-S3E-14"	ME-108H, 1-CN-L546, 1-CN-L549, 1-CN-L551	1-CN-L666		M6-CN-00081	Y	ET	1	Liquid	8.69	20.8	120.7	160.0	
1	CN	L	554	S3E	8	1-CN-L554-S3E-8"	1-CN-L411	ME-108E	M6-CN-00100		Y	ET	1	Liquid	4.70	17.7	130.1	160.0	
1	CN	L	555	S3E	8	1-CN-L555-S3E-8"	ME-108E	1-CN-L562		M6-CN-00080	Y	ET	1	Liquid	4.01	17.7	57.5	160.0	
1	CN	L	556	S3E	8	1-CN-L556-S3E-8"	1-CN-L411	ME-108F	M6-CN-00100		Y	ET	1	Liquid	4.70	17.7	130.1	160.0	
1	CN	L	557	S3E	8	1-CN-L557-S3E-8"	ME-108F	1-CN-L562		M6-CN-00080	Y	ET	1	Liquid	4.01	17.7	57.5	160.0	
1	CN	L	558	S3E	8	1-CN-L558-S3E-8"	1-CN-L411	ME-108G	M6-CN-00100		Y	ET	1	Liquid	4.70	17.7	130.1	160.0	
1	CN	L	559	S3E	8	1-CN-L559-S3E-8"	ME-108G	1-CN-L562		M6-CN-00080	Y	ET	1	Liquid	4.01	17.7	57.5	160.0	
1	CN	L	560	S3E	8	1-CN-L560-S3E-8"	1-CN-L411	ME-108H	M6-CN-00100		Y	ET	1	Liquid	4.70	17.7	130.1	160.0	
1	CN	L	561	S3E	8	1-CN-L561-S3E-8"	ME-108H	1-CN-L562		M6-CN-00080	Y	ET	1	Liquid	4.01	17.7	57.5	160.0	
1	CN	L	562	S3E	14	1-CN-L562-S3E-14"	1-CN-L555, 1-CN-L557, 1-CN-L559, 1-CN-L561	1-CN-L412	M6-CN-00080	M6-CN-00080	Y	ET	1	Liquid	4.01	17.7	57.5	160.0	
1	CN	L	563	S3E	8	1-CN-L563-S3E-8"	1-CN-L470	1-CN-L666	M6-CN-00040	M6-CN-00081	Y	ET	1	Liquid	8.69	20.8	120.7	160.0	
1	CN	L	564	S3E	18	1-CN-L564-S3E-18"	1-CN-L411	1-CN-L412	M6-CN-00100	M6-CN-00080	Y	ET	1	Liquid	4.01	17.7	57.5	160.0	NNF, BYPASS
1	CN	L	577	S3E	18	1-CN-L577-S3E-18"	1-CN-L412	1-CN-L413	M6-CN-00080	M6-CN-00080	Y	ET	1	Liquid	4.01	17.7	57.5	160.0	NNF, BYPASS
1	CN	L	579	S1E	12	1-CN-L579-S1E-12"	CHEMICAL CLEANING CONN.	1-CN-L649	M6-CN-00080	M6-CN-00080	Y	ET	1	Liquid	4.01	10	57.5	80.0	NNF
1	CN	L	580	S1E	4	1-CN-L580-S1E-4"	CHEMICAL CLEANING CONN.	1-CN-L586	M6-CN-00081	M6-CN-00081	Y	ET	1			10.0		80.0	NNF
1	CN	L	581	S1E	4	1-CN-L581-S1E-4"	CHEMICAL CLEANING CONN.	1-CN-L587	M6-CN-00081	M6-CN-00081	Y	ET	1			10.0		80.0	NNF
1	CN	L	582	S1E	4	1-CN-L582-S1E-4"	CHEMICAL CLEANING CONN.	1-CN-L588	M6-CN-00081	M6-CN-00081	Y	ET	1			10.0		80.0	NNF
1	CN	L	583	S1E	4	1-CN-L583-S1E-4"	CHEMICAL CLEANING CONN.	1-CN-L589	M6-CN-00081	M6-CN-00081	Y	ET	1			10.0		80.0	NNF
1	CN	L	584	S3E	4	1-CN-L584-S3E-4"	1-CN-L535	1-CN-L483	M6-CN-00081	M6-CN-00081	Y	ET	1	Liquid	8.69	20.8	120.7	160.0	
1	CN	L	585	S3E	4	1-CN-L585-S3E-4"	1-CN-L534	1-CN-L523	M6-CN-00081	M6-CN-00081	Y	ET	1	Liquid	4.01	17.7	57.5	160.0	
1	CN	L	586	S3E	4	1-CN-L586-S3E-4"	1-CN-L580	1-CN-L525	M6-CN-00081	M6-CN-00081	Y	ET	1	Liquid	4.01	17.7	57.5	160.0	
1	CN	L	587	S3E	4	1-CN-L587-S3E-4"	1-CN-L581	1-CN-L485	M6-CN-00081	M6-CN-00081	Y	ET	1	Liquid	8.69	20.8	120.7	160.0	
1	CN	L	588	S3E	4	1-CN-L588-S3E-4"	1-CN-L484	1-CN-L582	M6-CN-00081	M6-CN-00081	Y	ET	1	Liquid	9.73	20.8	52.2	100.0	
1	CN	L	589	S3E	4	1-CN-L589-S3E-4"	1-CN-L583	1-CN-L524	M6-CN-00081	M6-CN-00081	Y	ET	1	Liquid	4.70	17.7	130.1	160.0	
1	CN	L	642	S1E	1	1-CN-L642-S1E-1"	1-CN-L496	1-CN-L498	M6-CN-00110	M6-CN-00110	Y	ET	1			0.1		80.0	NNF
1	CN	L	644	S1E	1	1-CN-L644-S1E-1"	MP-106B DRAIN	1-CN-L645	M6-CN-00110	M6-CN-00110	Y	ET	1			11		145.0	NNF
1	CN	L	645	S1E	1	1-CN-L645-S1E-1"	1-CN-L495, 1-CN-L644	1-CN-L497	M6-CN-00110	M6-CN-00110	Y	ET	1			0.1		80.0	NNF
1	CN	L	647	S1E	24	1-CN-L647-S1E-24"	1-QG-L643	1-QG-L666	M6-CN-00140	M6-CN-00020	N	N	-	Vapour	1.08	3.5	48.7	105.0	NNF, NO POCKETS

Line Designation Table
FEED Study for Carbon Capture Plant Retrofit
Job No.: 26301
Document No.: 26031-000-M0X-0000-00002
Rev. No.: 00

Unit	Bechtel System Code	Comm Group Code	Seq No.	Line Class	Dia (inches)	Line Number	From	To	P&ID From	P&ID To	Insulated (Y/N)	Heat Trace	Insulation Thickness (in)	Phase	Operating Press (Barg)	Design Press (Barg)	Operating Temp (Deg C)	Design Temp (Deg C)	Remarks
1	CN	L	648	S3E	12	1-CN-L648-S3E-12"	1-CN-L479	1-CN-L413	M6-CN-00080	M6-CN-00080	Y	ET	1	Liquid	4.01	17.7	57.5	120.0	
1	CN	L	649	S3E	12	1-CN-L649-S3E-12"	1-CN-L579	1-CN-L412	M6-CN-00080	M6-CN-00080	Y	ET	1	Liquid	4.01	17.7	57.5	160.0	
1	CN	L	650	S1E	1	1-CN-L650-S1E-1"	1-CN-L493	DRAINS	M6-CN-00110	M6-XW-00001	Y	ET	1			0.1		80.0	NNF
1	CN	L	659	S3E	0.75	1-CN-L659-S3E-0.75"	1-CN-L680	1-CN-L660	M6-CN-00085	M6-CN-00085	Y	ET	1	Liquid	8.69	20.8	109.5	140.0	PSV INLET
1	CN	L	660	S1E	1	1-CN-L660-S1E-1"	1-CN-L659	DRAINS	M6-CN-00085	M6-CN-00085	Y	ET	1			0.1		80.0	NNF
1	CN	L	665	S1E	3	1-CN-L665-S1E-3"	CHEMICAL CLEANING CONN.	1-CN-L668	M6-CN-00085	M6-CN-00085	Y	ET	1			10		80.0	NNF
1	CN	L	666	S3E	18	1-CN-L666-S3E-18"	1-CN-L487, 1-CN-L553, 1-CN-L563	1-CN-L133	M6-CN-00081	M6-CN-00081	Y	ET	1	Liquid	8.69	20.8	120.7	160.0	
1	CN	L	667	S3E	4	1-CN-L667-S3E-4"	1-CN-L545	1-CN-L522	M6-CN-00081	M6-CN-00081	Y	ET	1	Liquid	4.70	17.7	130.1	160.0	
1	CN	L	668	S3E	3	1-CN-L668-S3E-3"	1-CN-L665	1-CN-L683	M6-CN-00085	M6-CN-00085	Y	ET	1	Liquid	8.69	20.8	109.5	140.0	
1	CN	L	669	S3E	0.75	1-CN-L669-S3E-0.75"	1-CN-L683	1-CN-L670	M6-CN-00085	M6-CN-00085	Y	ET	1	Liquid	8.69	20.8	109.5	140.0	PSV INLET
1	CN	L	670	S1E	1	1-CN-L670-S1E-1"	1-CN-L669	DRAINS	M6-CN-00085	M6-CN-00085	Y	ET	1			0.1		80.0	NNF
1	CN	L	671	S1E	3	1-CN-L671-S1E-3"	CHEMICAL CLEANING CONN.	1-CN-L679	M6-CN-00085	M6-CN-00085	Y	ET	1	Liquid	5.00	11	115.1	145.0	NNF
1	CN	L	672	S1E	3	1-CN-L672-S1E-3"	CHEMICAL CLEANING CONN.	1-CN-L681	M6-CN-00085	M6-CN-00085	Y	ET	1	Liquid	4.31	11	57.4	145.0	NNF
1	CN	L	673	S1E	0.75	1-CN-L673-S1E-0.75"	1-CN-L681	1-CN-L674	M6-CN-00085	M6-CN-00085	Y	ET	1	Liquid	4.31	11	57.4	145.0	PSV INLET
1	CN	L	674	S1E	1	1-CN-L674-S1E-1"	1-CN-L673	DRAINS	M6-CN-00085	M6-CN-00085	Y	ET	1			0.1		80.0	NNF
1	CN	L	675	S1E	3	1-CN-L675-S1E-3"	CHEMICAL CLEANING CONN.	1-CN-L684	M6-CN-00085	M6-CN-00085	Y	ET	1	Liquid	5.00	11	115.1	145.0	NNF
1	CN	L	676	S1E	3	1-CN-L676-S1E-3"	CHEMICAL CLEANING CONN.	1-CN-L685	M6-CN-00085	M6-CN-00085	Y	ET	1	Liquid	4.31	11	57.4	145.0	NNF
1	CN	L	677	S1E	0.75	1-CN-L677-S1E-0.75"	1-CN-L685	1-CN-L678	M6-CN-00085	M6-CN-00085	Y	ET	1	Liquid	4.31	11	57.4	145.0	PSV INLET
1	CN	L	678	S1E	1	1-CN-L678-S1E-1"	1-CN-L677	DRAINS	M6-CN-00085	M6-CN-00085	Y	ET	1			0.1		80.0	NNF
1	CN	L	679	S1E	6	1-CN-L679-S1E-6"	1-CN-L407, 1CN-L671	ME-103A, 1-CN-L659	M6-CN-00085	M6-CN-00085	Y	ET	1	Liquid	5.00	11	115.1	145.0	NNF
1	CN	L	680	S3E	6	1-CN-L680-S3E-6"	ME-103A	1-CN-L403	M6-CN-00085	M6-CN-00085	Y	ET	1	Liquid	8.69	20.8	109.5	140.0	
1	CN	L	681	S1E	6	1-CN-L681-S1E-6"	ME-103A, 1-CN-L672	1-CN-L172, 1-CN-L673	M6-CN-00085	M6-CN-00085	Y	ET	1	Liquid	4.31	11	57.4	145.0	
1	CN	L	682	S3E	6	1-CN-L682-S3E-6"	1-CN-L499, 1-CN-L696	ME-103A	M6-CN-00085	M6-CN-00085	Y	ET	1	Liquid	9.73	20.8	52.2	100.0	
1	CN	L	683	S3E	6	1-CN-L683-S3E-6"	ME-103B, 1-CN-L668	1-CN-L403	M6-CN-00085	M6-CN-00085	Y	ET	1	Liquid	8.69	20.8	109.5	140.0	
1	CN	L	684	S1E	6	1-CN-L684-S1E-6"	1-CN-L407, 1-CN-L675	ME-103B, 1-CN-L669	M6-CN-00085	M6-CN-00085	Y	ET	1	Liquid	5.00	11	115.1	145.0	
1	CN	L	685	S1E	6	1-CN-L685-S1E-6"	ME-103B, 1-CN-L676	1-CN-L172, 1-CN-L677	M6-CN-00085	M6-CN-00085	Y	ET	1	Liquid	4.31	11	57.4	145.0	
1	CN	L	686	S3E	6	1-CN-L686-S3E-6"	1-CN-L499, 1-CN-L698	ME-103B	M6-CN-00085	M6-CN-00085	Y	ET	1	Liquid	9.73	20.8	52.2	100.0	
1	CN	L	687	S1E	8	1-CN-L687-S1E-8"	MT-102	1-CN-L477	M6-CN-00080	M6-CY-00010	Y	ET	1	Liquid	2.98	17.7	49.1	120.0	NNF
1	CN	L	688	S1E	3	1-CN-L688-S1E-3"	1-WP-L020	MS-102	M6-WP-00010	M6-CN-00180	Y	ET	1	Liquid	5.40	9.1	48.3	80.0	INTERMITTENT
1	CN	L	689	S1E	3	1-CN-L689-S1E-3"	CHEMICAL CLEANING CONN.	1-CN-L450	M6-CN-00100	M6-CN-00100	Y	ET	1			10		80.0	NNF
1	CN	L	691	S1E	6	1-CN-L691-S1E-6"	1-CN-L407	1-CN-L172	M6-CN-00085	M6-CN-00085	Y	ET	1	Liquid	5.00	11	115.1	145.0	NNF, BYPASS
1	CN	L	694	S3E	3	1-CN-L694-S3E-3"	1-CN-L695	1-CN-L680	M6-CN-00085	M6-CN-00085	Y	ET	1	Liquid	8.69	20.8	109.5	140.0	
1	CN	L	695	S1E	3	1-CN-L695-S1E-3"	CHEMICAL CLEANING CONN.	1-CN-L694	M6-CN-00085	M6-CN-00085	Y	ET	1			10		80.0	NNF
1	CN	L	696	S3E	3	1-CN-L696-S3E-3"	1-CN-L697	1-CN-L682	M6-CN-00085	M6-CN-00085	Y	ET	1	Liquid	9.73	20.8	52.2	100.0	
1	CN	L	697	S1E	3	1-CN-L697-S1E-3"	CHEMICAL CLEANING CONN.	1-CN-L696	M6-CN-00085	M6-CN-00085	Y	ET	1			10		80.0	NNF
1	CN	L	698	S3E	3	1-CN-L698-S3E-3"	1-CN-L699	1-CN-L686	M6-CN-00085	M6-CN-00085	Y	ET	1	Liquid	9.73	20.8	52.2	100.0	
1	CN	L	699	S1E	3	1-CN-L699-S1E-3"	CHEMICAL CLEANING CONN.	1-CN-L698	M6-CN-00085	M6-CN-00085	Y	ET	1			10		80.0	NNF
1	CN	L	700	S1E	20	1-CN-L700-S1E-20"	1-CN-L405	MV-201	M6-CN-00110	M6-CN-00110	Y	ET	1	Liquid	1.56	4	115.0	145.0	
1	CN	L	705	S3E	4	1-CN-L705-S3E-4"	1-CN-L544	1-CN-L482	M6-CN-00081	M6-CN-00081	Y	ET	1	Liquid	9.73	20.8	52.2	100.0	
1	CN	L	750	S1E	8	1-CN-L750-S1E-8"	1-CN-L241, 1CN-L393	T-101	M6-CN-00040	M6-CN-00010	Y	ET	1	Liquid	0.07	0.1	52.1	100.0	MIN FLOW
1	CN	L	752	S1E	6	1-CN-L752-S1E-6"	T-103	1-CN-L753, 1-CN-L758	M6-CN-00130	M6-CN-00130	Y	ET	1	Vapour	1.25	3.5	109.3	160.0	PSV INLET
1	CN	L	753	S1E	8	1-CN-L753-S1E-8"	1-CN-L752, 1-CN-L758	1-QG-L666	M6-CN-00130	M6-CN-00020	Y	ET	1			0.1		100.0	NNF
1	CN	L	754	S3E	3	1-CN-L754-S3E-3"	1-CN-L468	1-CN-L403	M6-CN-00100	M6-CN-00100	Y	ET	1	Liquid	8.69	20.8	109.5	140.0	
1	CN	L	755	S3E	3	1-CN-L755-S3E-3"	1-CN-L461	1-CN-L404	M6-CN-00100	M6-CN-00100	Y	ET	1	Liquid	7.66	20.8	113.3	145.0	
1	CN	L	756	S3E	3	1-CN-L756-S3E-3"	1-CN-L469	1-CN-L404	M6-CN-00100	M6-CN-00100	Y	ET	1	Liquid	7.66	20.8	113.3	145.0	
1	CN	L	757	S3E	3	1-CN-L757-S3E-3"	1-CN-L462	1-CN-L405	M6-CN-00100	M6-CN-00100	Y	ET	1	Liquid	6.62	20.8	122.8	155.0	
1	CN	L	758	S1E	2	1-CN-L758-S1E-2"	1-CN-L752	1-CN-L753	M6-CN-00130	M6-CN-00130	Y	ET	1	Vapour	1.25	3.5	109.3	160.0	BYPASS, NNF
1	CN	L	760	S3E	3	1-CN-L760-S3E-3"	1-CN-L449	1-CN-L256	M6-CN-00100	M6-CN-00100	Y	ET	1	Liquid	5.39	17.7	131.1	160.0	
1	CN	L	762	S3E	10	1-CN-L762-S3E-10"	1-CN-L255	1-CN-L239	M6-CN-00170	M6-CN-00170	Y	ET	1	Liquid	5.39	17.7	131.1	160.0	MIN FLOW
1	CN	L	763	S3E	10	1-CN-L763-S3E-10"	1-CN-L253, 1-CN-L239	1-CN-L173	M6-CN-00170	M6-CN-00170	Y	ET	1	Liquid	5.39	17.7	131.1	160.0	MIN FLOW
1	CN	L	780	S1E	24	1-CN-L780-S1E-24"	CO2 WET VENT HEADER FROM COMPR. SYSTEM	T-101 STACK	M6-CN-00020	M6-CN-00020	N	N	-	Vapour	-0.01	0.1	49.3	100.0	NNF, WET VENT HEADER
1	CN	L	781	S1E	24	1-CN-L781-S1E-24"	CO2 WET VENT HEADER FROM COMPR. SYSTEM	T-102 STACK	M6-CN-00020		N	N	-	Vapour	-0.01	0.1	49.3	100.0	NNF, WET VENT HEADER
1	CY	L	751	S1E	6	1-CY-L751-S1E-6"	TRUCK FILL CONNECTION	MT-102, DRAINS	M6-CY-00010	M6-CY-00010	Y	ET	1			0.04		80.0	INTERMITTENT
1	CY	L	754	S1E	3	1-CY-L754-S1E-3"	1-CY-L767, 1-CY-L757	MT-101	M6-CY-00010	M6-CY-00010	Y	ET	1			0.04		80.0	MIN FLOW
1	CY	L	755	C1E	3	1-CY-L755-C1E-3"	1-CY-L758	1-XW-L047	M6-CY-00010	M6-XW-00001	Y	ET	1			0.1		100.0	NNF
1	CY	L	756	S1E	6	1-CY-L756-S1E-6"	MT-101	1-CY-L766	M6-CY-00010	M6-CY-00010	Y	ET	1			0.04		80.0	NNF
1	CY	L	757	S1E	3	1-CY-L757-S1E-3"	1-CY-L769	1-CY-L754	M6-CY-00010	M6-CY-00010	Y	ET	1			0.04		80.0	MIN FLOW
1	CY	L	758	S1E	2	1-CY-L758-S1E-2"	1-CY-L770	1-CY-L755	M6-CY-00010	M6-CY-00010	Y	ET	1			12		80.0	INTERMITTENT
1	CY	L	760	S1E	4	1-CY-L760-S1E-4"	MT-102	DRAINS	M6-CY-00010	M6-XW-00001	Y	ET	1			0.04		80.0	NNF

Line Designation Table
FEED Study for Carbon Capture Plant Retrofit
Job No.: 26301
Document No.: 26031-000-M0X-0000-00002
Rev. No.: 00

Unit	Bechtel System Code	Comm Group Code	Seq No.	Line Class	Dia (inches)	Line Number	From	To	P&ID From	P&ID To	Insulated (Y/N)	Heat Trace	Insulation Thickness (in)	Phase	Operating Press (Barg)	Design Press (Barg)	Operating Temp (Deg C)	Design Temp (Deg C)	Remarks
1	CY	L	761	S1E	6	1-CY-L761-S1E-6"	1-CY-L766	MP-111B	M6-CY-00010	M6-CY-00010	Y	ET	1			0.04		80.0	INTERMITTENT
1	CY	L	762	S1E	4	1-CY-L762-S1E-4"	MP-111B	1-CY-L770, 1-CY-L769, 1-CY-L795	M6-CY-00010	M6-CY-00010	Y	ET	1	Liquid	2.12	12	46.6	80.0	INTERMITTENT
1	CY	L	763	S1E	4	1-CY-L763-S1E-4"	MT-102	DRAINS	M6-CY-00010	M6-XW-00001	N	N	-			0.04		80.0	NNF
1	CY	L	766	S1E	6	1-CY-L766-S1E-6"	MT-102, 1-CY-L756	MP-111A, 1-CY-L761	M6-CY-00010	M6-CY-00010	Y	ET	1			0.04		80.0	INTERMITTENT
1	CY	L	767	S1E	3	1-CY-L767-S1E-3"	1-CY-L770	1-CY-L769, 1-CY-L754	M6-CY-00010	M6-CY-00010	Y	ET	1			0.04		80.0	MIN FLOW
1	CY	L	769	S1E	3	1-CY-L769-S1E-3"	1-CY-L762, 1-CY-L767	MT-102, 1-CY-L757	M6-CY-00010	M6-CY-00010	Y	ET	1			0.04		80.0	MIN FLOW
1	CY	L	770	S1E	4	1-CY-L770-S1E-4"	MP-111A, 1-CY-L762	1-CY-L758, 1-CY-767, 1-CY-L793	M6-CY-00010	M6-CN-00080	Y	ET	1	Liquid	2.12	12	46.6	80.0	INTERMITTENT
1	CY	L	781	S1E	2	1-CY-L781-S1E-2"	MP-111A	DRAINS	M6-CY-00010	M6-XW-00001	Y	ET	1			0.1		80.0	NNF
1	CY	L	782	S1E	2	1-CY-L782-S1E-2"	MP-111B	1-CY-L781	M6-CY-00010	M6-CY-00010	Y	ET	1			0.1		80.0	NNF
1	CY	L	788	S1E	4	1-CY-L788-S1E-4"	MT-102	1-CY-L804	M6-CY-00010	M6-CY-00010	Y	ET	1			0.04		80.0	VENT
1	CY	L	789	S1E	4	1-CY-L789-S1E-4"	MT-101	1-CY-L805	M6-CY-00010	M6-XW-00001	Y	ET	1			0.04		80.0	VENT
1	CY	L	790	S1E	4	1-CY-L790-S1E-4"	ACTIVATED CARBON FILTERS	VENT TO SAFE LOCATION	M6-CY-00010	M6-CY-00010	Y	ET	1			1		80.0	VENT
1	CY	L	792	S1E	1	1-CY-L792-S1E-1"	1-CY-L766	1-CY-L781	M6-CY-00010	M6-CY-00010	Y	ET	1			0.1		80.0	NNF
1	CY	L	793	S1E	1	1-CY-L793-S1E-1"	1-CY-L770	DRAINS	M6-CY-00010	M6-XW-00001	Y	ET	1			0.1		80.0	NNF
1	CY	L	794	S1E	1	1-CY-L794-S1E-1"	1-CY-L761	1-CY-L781	M6-CY-00010	M6-CY-00010	Y	ET	1			0.1		80.0	NNF
1	CY	L	795	S1E	1	1-CY-L795-S1E-1"	1-CY-L762	DRAINS	M6-CY-00010	M6-XW-00001	Y	ET	1			0.1		80.0	NNF
1	CY	L	800	S1E	4	1-CY-L800-S1E-4"	MT-101	DRAINS	M6-CY-00010	M6-XW-00001	Y	ET	1			0.1		80.0	NNF
1	CY	L	801	S1E	4	1-CY-L801-S1E-4"	MT-101	DRAINS	M6-CY-00010	M6-XW-00001	Y	ET	1			0.1		80.0	NNF
1	CY	L	804	S1E	4	1-CY-L804-S1E-4"	1-CY-L788	1-CY-L805	M6-CY-00010	M6-CY-00010	N	N	-			1		80.0	
1	CY	L	805	S1E	4	1-CY-L805-S1E-4"	1-CY-L789, 1-CY-L804	ACTIVATED CARBON FILTERS	M6-CY-00010	M6-CY-00010	N	N	-			1		80.0	
1	PA	L	001	B1E	2	1-PA-L001-B1E-2"	MC-101A, 1-PA-L002	MT-109	M6-PA-00001	M6-PA-00001	N	N	-	Vapour	7.00	9	30.0	80.0	
1	PA	L	002	B1E	2	1-PA-L002-B1E-2"	MC-101B	1-PA-L001	M6-PA-00001	M6-PA-00001	N	N	-	Vapour	7.00	9	30.0	80.0	
1	PA	L	003	B1E	2	1-PA-L003-B1E-2"	MT-109, 1-PA-L008, 1-PA-L005, 1-PA-L007	1-PA-L004, 1-PA-L006, 1-PA-L022, 1-PA-L009, 1-PA-L017	M6-PA-00001	M6-PA-00001	N	N	-	Vapour	7.00	9	30.0	80.0	
1	PA	L	004	B1E	2	1-PA-L004-B1E-2"	1-PA-L003	MS-105A	M6-PA-00001	M6-PA-00001	N	N	-	Vapour	7.00	9	30.0	80.0	
1	PA	L	005	B1E	2	1-PA-L005-B1E-2"	MS-105A	1-PA-L003	M6-PA-00001	M6-PA-00001	N	N	-	Vapour	7.00	9	30.0	80.0	
1	PA	L	006	B1E	2	1-PA-L006-B1E-2"	1-PA-L003	MS-105B	M6-PA-00001	M6-PA-00001	N	N	-	Vapour	7.00	9	30.0	80.0	
1	PA	L	007	B1E	2	1-PA-L007-B1E-2"	MS-105B	1-PA-L003	M6-PA-00001	M6-PA-00001	N	N	-	Vapour	7.00	9	30.0	80.0	
1	PA	L	008	B1E	2	1-PA-L008-B1E-2"	HOSE CONNECTION	1-PA-L003	M6-PA-00001	M6-PA-00001	N	N	-			9		80.0	NNF
1	PA	L	009	B1E	1	1-PA-L009-B1E-1"	1-PA-L003	IA TO CO2 COMPR BLDG	M6-PA-00002	M6-PA-00002	N	N	-	Vapour	7.00	9	30.0	80.0	
1	PA	L	010	B1E	1	1-PA-L010-B1E-1"	1-PA-L009	SA TO CO2 COMPR BLDG	M6-PA-00002	M6-PA-00002	N	N	-			9		80.0	NNF
1	PA	L	011	B1E	1	1-PA-L011-B1E-1"	1-PA-L003	IA TO WORKSHOP/STORES	M6-PA-00002	M6-PA-00002	N	N	-	Vapour	7.00	9	30.0	80.0	
1	PA	L	012	B1E	1	1-PA-L012-B1E-1"	1-PA-L011	SA TO WORKSHOP/STORES	M6-PA-00002	M6-PA-00002	N	N	-			9		80.0	NNF
1	PA	L	013	B1E	1	1-PA-L013-B1E-1"	1-PA-L003	IA TO ABSORBER 1	M6-PA-00002	M6-PA-00002	N	N	-	Vapour	7.00	9	30.0	80.0	
1	PA	L	014	B1E	1	1-PA-L014-B1E-1"	1-PA-L013	SA TO ABSORBER 1	M6-PA-00002	M6-PA-00002	N	N	-			9		80.0	NNF
1	PA	L	015	B1E	1	1-PA-L015-B1E-1"	1-PA-L003	ANALYSER BLDG	M6-PA-00002	M6-PA-00002	N	N	-	Vapour	7.00	9	30.0	80.0	
1	PA	L	016	B1E	1	1-PA-L016-B1E-1"	1-PA-L003	SA TO ABSORBER 2	M6-PA-00002	M6-PA-00002	N	N	-			9		80.0	NNF
1	PA	L	017	B1E	1	1-PA-L017-B1E-1"	1-PA-L003	IA TO ABSORBER 2	M6-PA-00002	M6-PA-00002	N	N	-	Vapour	7.00	9	30.0	80.0	
1	PA	L	018	B1E	1	1-PA-L018-B1E-1"	1-PA-L003	IA TO STRIPPER	M6-PA-00002	M6-PA-00002	N	N	-	Vapour	7.00	9	30.0	80.0	
1	PA	L	019	B1E	1	1-PA-L019-B1E-1"	1-PA-L018	SA TO STRIPPER	M6-PA-00002	M6-PA-00002	N	N	-			9		80.0	NNF
1	PA	L	020	B1E	1	1-PA-L020-B1E-1"	1-PA-L003	IA TO TANK BUND/SUMP	M6-PA-00002	M6-PA-00002	N	N	-	Vapour	7.00	9	30.0	80.0	
1	PA	L	021	B1E	1	1-PA-L021-B1E-1"	1-PA-L020	SA TO TANK BUND/SUMP	M6-PA-00002	M6-PA-00002	N	N	-			9		80.0	NNF
1	PA	L	022	B1E	1	1-PA-L022-B1E-1"	1-PA-L003	IA TO CO2 TRANSPORT AREA, 1-PA-L027	M6-PA-00002	M6-PA-00002	N	N	-	Vapour	7.00	9	30.0	80.0	
1	PA	L	024	B1E	2	1-PA-L024-B1E-2"	MT-109	VENT TO SAFE LOCATION	M6-PA-00001	M6-PA-00001	N	N	-			1		80.0	NNF
1	PA	L	025	B1E	2	1-PA-L025-B1E-2"	MT-109	DRAINS	M6-PA-00001	M6-XW-00002	N	N	-			0.1		80.0	NNF
1	PA	L	026	B1E	2	1-PA-L026-B1E-2"	MT-109	DRAINS	M6-PA-00001	M6-XW-00002	N	N	-			0.1		80.0	NNF
1	PA	L	027	B1E	1	1-PA-L027-B1E-1"	1-PA-L022	SA TO CO2 TRANHSPORT AREA	M6-PA-00002	M6-PA-00002	N	N	-			9		80.0	NNF
1	PF	L	001	FSE	8	1-PF-L001-FSE-8"	OSBL FIREWATER SUPPLY	1-PF-L003	M6-PF-00001	M6-PF-00001	N	N	-	Liquid	11.70	14	30.0	80.0	FW RINGMAIN, NOTE 10
1	PF	L	002	FSE	8	1-PF-L002-FSE-8"	OSBL FIREWATER SUPPLY	1-PF-L003	M6-PF-00001	M6-PF-00001	N	N	-	Liquid	11.70	14	30.0	80.0	FW RINGMAIN, NOTE 10
1	PF	L	003	FSE	8	1-PF-L003-FSE-8"	1-PF-L001, 1-PF-L002	FIREWATER RINGMAIN	M6-PF-00001	M6-PF-00001	N	N	-	Liquid	11.70	14	30.0	80.0	FW RINGMAIN, NOTE 10
1	PF	L	004	FSE	6	1-PF-L004-FSE-6"	1-PF-L003	HYDRANT	M6-PF-00001	M6-PF-00001	N	N	-	Liquid	11.70	14	30.0	80.0	HYDRANT, NOTE 10
1	PF	L	005	FSE	6	1-PF-L005-FSE-6"	1-PF-L003	HYDRANT	M6-PF-00001	M6-PF-00001	N	N	-	Liquid	11.70	14	30.0	80.0	HYDRANT, NOTE 10
1	PF	L	006	FSE	6	1-PF-L006-FSE-6"	1-PF-L003	HYDRANT	M6-PF-00001	M6-PF-00001	N	N	-	Liquid	11.70	14	30.0	80.0	HYDRANT, NOTE 10
1	PF	L	007	FSE	6	1-PF-L007-FSE-6"	1-PF-L003	HYDRANT	M6-PF-00001	M6-PF-00001	N	N	-	Liquid	11.70	14	30.0	80.0	HYDRANT, NOTE 10
1	PF	L	008	FSE	6	1-PF-L008-FSE-6"	1-PF-L003	HYDRANT	M6-PF-00001	M6-PF-00001	N	N	-	Liquid	11.70	14	30.0	80.0	HYDRANT, NOTE 10
1	PF	L	009	FSE	6	1-PF-L009-FSE-6"	1-PF-L003	HYDRANT	M6-PF-00001	M6-PF-00001	N	N	-	Liquid	11.70	14	30.0	80.0	HYDRANT, NOTE 10
1	PF	L	010	FSE	6	1-PF-L010-FSE-6"	1-PF-L003	HYDRANT	M6-PF-00001	M6-PF-00001	N	N	-	Liquid	11.70	14	30.0	80.0	HYDRANT, NOTE 10
1	PF	L	011	FSE	6	1-PF-L011-FSE-6"	1-PF-L003	HYDRANT	M6-PF-00001	M6-PF-00001	N	N	-	Liquid	11.70	14	30.0	80.0	HYDRANT, NOTE 10
1	PF	L	015	FSE	6	1-PF-L015-FSE-6"	1-PF-L003	1-PF-L021	M6-PF-00001	M6-PF-00001	N	N	-	Liquid	11.70	14	30.0	80.0	HYDRANT, NOTE 10
1	PF	L	021	FSE	6	1-PF-L021-FSE-6"	1-PF-L015	CO2 COMPR. SPRINKLERS	M6-PF-00001	M6-PF-00001	N	N	-	Liquid	11.70	14	30.0	80.0	CO2 COMPR SPRINKLER, NOTE 10

Line Designation Table
FEED Study for Carbon Capture Plant Retrofit
Job No.: 26301
Document No.: 26031-000-M0X-0000-00002
Rev. No.: 00

Unit	Bechtel System Code	Comm Group Code	Seq No.	Line Class	Dia (inches)	Line Number	From	To	P&ID From	P&ID To	Insulated (Y/N)	Heat Trace	Insulation Thickness (in)	Phase	Operating Press (Barg)	Design Press (Barg)	Operating Temp (Deg C)	Design Temp (Deg C)	Remarks
1	PG	L	001	C1E	3	1-PG-L001-C1E-3"	N2 CYLINDERS	G-L004, 1-PG-L003, 1-PG-L009, 1-PG-L007, 1-PG-L005, 1-PG-L010, 1-PG-L	M6-PG-00001	M6-PG-00001	N	N	-	Vapour	5.00	7	30.0	80.0	
1	PG	L	003	C1E	1	1-PG-L003-C1E-1"	1-PG-L001	N2 TO CO2 TRANSPORT AREA	M6-PG-00001	M6-PG-00001	N	N	-			7		80.0	NNF
1	PG	L	004	C1E	1	1-PG-L004-C1E-1"	1-PG-L001	N2 TO TANK BUND/SUMP	M6-PG-00001	M6-PG-00001	N	N	-			7		80.0	NNF
1	PG	L	005	C1E	1	1-PG-L005-C1E-1"	1-PG-L001	N2 TO STRIPPER	M6-PG-00001	M6-PG-00001	N	N	-			7		80.0	NNF
1	PG	L	006	C1E	1	1-PG-L006-C1E-1"	1-PG-L001	N2 TO ABSORBER 1	M6-PG-00001	M6-PG-00001	N	N	-			7		80.0	NNF
1	PG	L	007	C1E	1	1-PG-L007-C1E-1"	1-PG-L001	N2 TO CO2 COMPR BLDG	M6-PG-00001	M6-PG-00001	N	N	-			7		80.0	NNF
1	PG	L	009	C1E	1	1-PG-L009-C1E-1"	1-PG-L001	N2 TO WORKSHOP/STORES	M6-PG-00001	M6-PG-00001	N	N	-			7		80.0	NNF
1	PG	L	010	C1E	1	1-PG-L010-C1E-1"	1-PG-L001	N2 TO ABSORBER 2	M6-PG-00001	M6-PG-00001	N	N	-			7		80.0	NNF
1	PG	L	011	C1E	3	1-PG-L011-C1E-3"	N2 CYLINDERS	1-PG-L012, 1-PG-L014	M6-PG-00001	M6-PG-00001	N	N	-	Vapour	5.00	7	30.0	80.0	
1	PG	L	012	C1E	2	1-PG-L012-C1E-2"	1-PG-L011	MT-101	M6-PG-00001	M6-CY-00010	N	N	-	Vapour	2.00	7	30.0	80.0	BLANKETING LINE, INTERMITTENT
1	PG	L	014	C1E	2	1-PG-L014-C1E-2"	1-PG-L011	MT-102	M6-PG-00001	M6-CY-00010	N	N	-	Vapour	2.00	7	30.0	80.0	BLANKETING LINE, INTERMITTENT
1	PW	L	001	ESQ	3	1-PW-L001-ESQ-3"	OSBL POTABLE WATER	1-PW-L003, 1-PW-L016, 1-PW-L030	M6-PW-00001	M6-PW-00001	N	N	-			7		80.0	BURIED PIPE
1	PW	L	003	BEQ	3	1-PW-L003-BEQ-3"	1-PW-L001	PW MAIN HEADER TO USERS	M6-PW-00001	M6-PW-00001	Y	ET	1	Liquid	5.00	7	30.0	80.0	
1	PW	L	004	BEQ	1	1-PW-L004-BEQ-1"	1-PW-L012	PW TO TANK BUND/SUMP AREA	M6-PW-00001	M6-PW-00001	Y	ET	1			7		80.0	NNF
1	PW	L	005	BEQ	2	1-PW-L005-BEQ-2"	1-PW-L003	SAFETY SHOWER STRIPPER AREA, 1-PW-L022, DRAIN	M6-PW-00001	M6-PW-00001	Y	ET	1	Liquid	5.00	7	30.0	80.0	
1	PW	L	006	BEQ	2	1-PW-L006-BEQ-2"	1-PW-L003	1-PW-L025	M6-PW-00001	M6-PW-00001	Y	ET	1	Liquid	5.00	7	30.0	80.0	
1	PW	L	007	BEQ	2	1-PW-L007-BEQ-2"	1-PW-L003	SAFETY SHOWER ABSORBER 1 AREA, 1-PW-L024	M6-PW-00001	M6-PW-00001	Y	ET	1	Liquid	5.00	7	30.0	80.0	
1	PW	L	008	BEQ	3	1-PW-L008-BEQ-3"	1-PW-L019	1-PW-L011, 1-PW-L015, DRAIN	M6-PW-00001	M6-PW-00001	N	N	-	Liquid	5.00	7	30.0	80.0	
1	PW	L	009	BEQ	2	1-PW-L009-BEQ-2"	1-PW-L003	SAFETY SHOWER TO REBOILER/RECLAIMER (UPPER)	M6-PW-00001	M6-PW-00001	Y	ET	1	Liquid	5.00	7	30.0	80.0	
1	PW	L	010	BEQ	1	1-PW-L010-BEQ-1"	1-PW-L013	PW TO ABSORBER AREA 2	M6-PW-00001	M6-PW-00001	Y	ET	1			7		80.0	NNF
1	PW	L	011	BEQ	2	1-PW-L011-BEQ-2"	1-PW-L008	SAFETY SHOWER CO2 COMPR AREA	M6-PW-00001	M6-PW-00001	N	N	-	Liquid	5.00	7	30.0	80.0	
1	PW	L	012	BEQ	2	1-PW-L012-BEQ-2"	1-PW-L003	SAFETY SHOWER BUND/SUMP AREA, 1-PW-L004, DRAIN	M6-PW-00001	M6-PW-00001	Y	ET	1	Liquid	5.00	7	30.0	80.0	
1	PW	L	013	BEQ	2	1-PW-L013-BEQ-2"	1-PW-L003	SAFETY SHOWER ABSORBER 2 AREA, 1-PW-L010	M6-PW-00001	M6-PW-00001	Y	ET	1	Liquid	5.00	7	30.0	80.0	
1	PW	L	014	BEQ	2	1-PW-L014-BEQ-2"	1-PW-L003	SAFETY SHOWER TO REBOILER/RECLAIMER (LOWER)	M6-PW-00001	M6-PW-00001	Y	ET	1	Liquid	5.00	7	30.0	80.0	
1	PW	L	015	BEQ	1	1-PW-L015-BEQ-1"	1-PW-L008	PW TO CO2 COMPR. BLDG	M6-PW-00001	M6-PW-00001	N	N	-			7		80.0	NNF
1	PW	L	016	ESQ	2	1-PW-L016-ESQ-2"	1-PW-L001	1-PW-L018	M6-PW-00001	M6-PW-00001	N	N	-			7		80.0	BURIED PIPE
1	PW	L	018	BEQ	2	1-PW-L018-BEQ-2"	1-PW-L016	PW TO WORKSHOP/STORES, 1-PW-L023	M6-PW-00001	M6-PW-00001	N	N	-	Liquid	5.00	7	30.0	80.0	
1	PW	L	019	BEQ	3	1-PW-L019-BEQ-3"	1-PW-L003	1-PW-L008	M6-PW-00001	M6-PW-00001	Y	ET	1	Liquid	5.00	7	30.0	80.0	
1	PW	L	021	BEQ	2	1-PW-L021-BEQ-2"	1-PW-L025	DRAIN	M6-PW-00001	M6-PW-00001	N	N	-	Liquid	5.00	7	30.0	80.0	
1	PW	L	022	BEQ	1	1-PW-L022-BEQ-1"	1-PW-L005	PW TO STRIPPER AREA	M6-PW-00001	M6-PW-00001	Y	ET	1			7		80.0	NNF
1	PW	L	023	BEQ	2	1-PW-L023-BEQ-2"	1-PW-L018	PW TO WORKSHOP/STORES	M6-PW-00001	M6-PW-00001	N	N	-			7		80.0	NNF
1	PW	L	024	BEQ	1	1-PW-L024-BEQ-1"	1-PW-L007	PW TO ABSORBER AREA 1	M6-PW-00001	M6-PW-00001	Y	ET	1			7		80.0	NNF
1	PW	L	030	ESQ	1	1-PW-L030-ESQ-1"	1-PW-L001	1-PW-L031	M6-PW-00001	M6-PW-00001	N	N	-			7		80.0	BURIED PIPE
1	PW	L	031	BEQ	1	1-PW-L031-BEQ-1"	1-PW-L030	PW TO CO2 TRANSPORT AREA	M6-PW-00001	M6-PW-00001	N	N	-			7		80.0	NNF
1	QG	L	551	S1E	24	1-QG-L551-S1E-24"	MV-203	MC-103 1ST STAGE	M6-QG-00010	M6-QG-00020	N	N	-	Vapour	1.08	3.5	48.7	105.0	FREE DRAINING
1	QG	L	552	S1E	18	1-QG-L552-S1E-18"	MC-103 1ST STAGE, 1-QG-L619	ME-112, 1-QG-L586	M6-QG-00020	M6-QG-00030	N	N	-	Vapour	6.02	6.7	176.7	205.0	FREE DRAINING
1	QG	L	555	S1E	18	1-QG-L555-S1E-18"	ME-112	ME-113	M6-QG-00030	M6-QG-00030	N	N	-	Vapour	5.75	6.7	129.4	205.0	
1	QG	L	556	S1E	18	1-QG-L556-S1E-18"	ME-113	MV-104	M6-QG-00030	M6-QG-00040	N	N	-	Mixed	5.40	6.7	38.6	177.0	2-PHASE FLOW, NO POCKETS
1	QG	L	557	S1E	18	1-QG-L557-S1E-18"	MV-104	MC-103 2ND STAGE	M6-QG-00040	M6-QG-00050	N	N	-	Vapour	5.33	6.7	38.5	177.0	FREE DRAINING
1	QG	L	558	S3E	14	1-QG-L558-S3E-14"	MC-103 2ND STAGE, 1-QG-L620	ME-114, 1-QG-L559	M6-QG-00050	M6-QG-00060	N	N	-	Vapour	22.78	25.9	176.7	205.0	FREE DRAINING
1	QG	L	559	S3E	14	1-QG-L559-S3E-14"	1-QG-L558	1-QG-L619	M6-QG-00050	M6-QG-00050	N	N	-	Vapour	22.78	25.9	176.7	205.0	FREE DRAINING
1	QG	L	561	S3E	14	1-QG-L561-S3E-14"	ME-114	ME-115	M6-QG-00060	M6-QG-00060	N	N	-	Vapour	22.51	25.9	129.4	205.0	
1	QG	L	563	S3E	14	1-QG-L563-S3E-14"	ME-115	MV-105	M6-QG-00060	M6-QG-00070	N	N	-	Mixed	22.16	25.9	38.6	177.0	2-PHASE FLOW, NO POCKETS
1	QG	L	565	S3E	14	1-QG-L565-S3E-14"	MS-104	MC-103 3RD STAGE, GAS ANALYSIS PANEL	M6-QG-00080	M6-QG-00090	N	N	-	Vapour	21.75	25.9	38.5	177.0	
1	QG	L	566	S9E	10	1-QG-L566-S9E-10"	MC-103 3RD STAGE	ME-116, 1-QG-L567	M6-QG-00090	M6-QG-00100	N	N	-	Vapour	82.57	111.7	176.7	205.0	
1	QG	L	567	S9E	10	1-QG-L567-S9E-10"	1-QG-L566	1-QG-L620	M6-QG-00090	M6-QG-00090	N	N	-	Vapour	82.57	111.7	176.7	205.0	ANTI-SURGE, FREE DRAINING, NNF
1	QG	L	569	S9E	10	1-QG-L569-S9E-10"	ME-116	ME-117	M6-QG-00100	M6-QG-00100	N	N	-	Vapour	82.29	111.7	129.4	205.0	
1	QG	L	570	S9E	8	1-QG-L570-S9E-8"	ME-117	MV-106	M6-QG-00100	M6-QG-00110	N	N	-	Liquid	81.95	111.7	38.6	177.0	NO POCKETS
1	QG	L	571	S9E	10	1-QG-L571-S9E-10"	MV-106	1-QG-L-611, 1-QG-L609	M6-QG-00110	M6-QG-00110	N	N	-	Liquid	81.88	111.7	38.6	177.0	
1	QG	L	572	SLE	8	1-QG-L572-SLE-8"	ME-118	CO2 EXPORT TO BL	M6-QG-00120		N	N	-	Liquid	149.99	244.7	38.6	106.0	
1	QG	L	573	S9E	4	1-QG-L573-S9E-4"	MV-106	1-QG-L574, 1-QG-L685	M6-QG-00110	M6-QG-00110	N	N	-	Liquid	81.95	111.7	38.6	177.0	FREE DRAINING
1	QG	L	574	S1E	6	1-QG-L574-S1E-6"	1-GC-L573	1-QG-L666	M6-QG-00110	M6-QG-00110	N	N	-			0.1		100.0	NNF
1	QG	L	575	SLE	8	1-QG-L575-SLE-8"	1-QG-L577	1-QG-L579	M6-QG-00120	M6-QG-00120	N	N	-	Liquid	150.99	244.7	78.0	106.0	NNF
1	QG	L	576	SLE	8	1-QG-L576-SLE-8"	1-QG-L578	1-QG-L572	M6-QG-00120	M6-QG-00120	N	N	-	Liquid	149.99	244.7	38.6	106.0	NNF
1	QG	L	577	S1E	8	1-QG-L577-S1E-8"	CHEMICAL CLEANING CONN.	1-QG-L575	M6-QG-00120	M6-QG-00120	N	N	-			10		80.0	NNF
1	QG	L	578	S1E	8	1-QG-L578-S1E-8"	CHEMICAL CLEANING CONN.	1-QG-L576	M6-QG-00120	M6-QG-00120	N	N	-			10		80.0	NNF
1	QG	L	579	SLE	8	1-QG-L579-SLE-8"	MP-108A, 1-QG-L591	ME-118, 1-QG-L614	M6-QG-00110	M6-QG-00120	N	N	-	Liquid	150.99	244.7	78.0	106.0	
1	QG	L	580	S1E	2	1-QG-L580-S1E-2"	MV-203	1-QG-L677	M6-QG-00010	M6-QG-00010	N	N	-			3.5		105.0	
1	QG	L	583	S1E	16	1-QG-L583-S1E-16"	MV-203	1-QG-L667, 1-QG-L668	M6-QG-00010	M6-QG-00010	N	N	-	Vapour	1.08	3.5	48.7	105.0	NNF

Line Designation Table
FEED Study for Carbon Capture Plant Retrofit
Job No.: 26301
Document No.: 26031-000-M0X-0000-00002
Rev. No.: 00

Unit	Bechtel System Code	Comm Group Code	Seq No.	Line Class	Dia (inches)	Line Number	From	To	P&ID From	P&ID To	Insulated (Y/N)	Heat Trace	Insulation Thickness (in)	Phase	Operating Press (Barg)	Design Press (Barg)	Operating Temp (Deg C)	Design Temp (Deg C)	Remarks
1	QG	L	584	S1E	12	1-QG-L584-S1E-12"	1-QG-L667	1-QG-L666	M6-QG-00010	M6-QG-00010	N	N	-			0.1		100.0	NNF, NO POCKETS
1	QG	L	585	S1E	2	1-QG-L585-S1E-2"	MS-104	DRAINS	M6-QG-00080	M6-XW-00001	N	N	-			0.1		80.0	NNF
1	QG	L	586	S1E	18	1-QG-L586-S1E-18"	1-QG-L552	1-QG-L588	M6-QG-00020	M6-QG-00020	N	N	-	Vapour	6.02	6.7	176.7	205.0	ANTI-SURGE, FREE DRAINING, NNF
1	QG	L	588	S1E	20	1-QG-L588-S1E-20"	1-QG-L586	1-CN-L151	M6-QG-00020	M6-CN-00130	N	N	-	Vapour	1.25	3.5	109.3	177.0	ANTI-SURGE, FREE DRAINING, NNF
1	QG	L	591	SLE	8	1-QG-L591-SLE-8"	MP-108B	1-QG-L573, 1-QG-L641	M6-QG-00110	M6-QG-00110	N	N	-	Liquid	150.99	244.7	78.0	106.0	
1	QG	L	592	SLE	1	1-QG-L592-SLE-1"	MP-108A	1-QG-L616	M6-QG-00110	M6-QG-00110	N	N	-	Liquid	150.99	244.7	78.0	106.0	NNF
1	QG	L	593	SLE	1	1-QG-L593-SLE-1"	MP-108B	1-QG-L617	M6-QG-00110	M6-QG-00110	N	N	-	Liquid	150.99	244.7	78.0	106.0	NNF
1	QG	L	594	S1E	10	1-QG-L594-S1E-10"	1-QG-L668	1-QG-L669	M6-QG-00010	M6-QG-00010	N	N	-	Vapour	1.08	3.5	48.7	105.0	NNF
1	QG	L	595	S1E	14	1-QG-L595-S1E-14"	MV-104	1-QG-L670, 1-QG-L671	M6-QG-00040	M6-QG-00040	N	N	-	Vapour	5.33	6.7	38.5	177.0	
1	QG	L	596	S1E	12	1-QG-L596-S1E-12"	1-QG-L595, 1-QG-L599	1-QG-L666	M6-QG-00040	M6-QG-00040	N	N	-			0.1		100.0	NNF
1	QG	L	598	S1E	2	1-QG-L598-S1E-2"	MV-104	1-QG-L678	M6-QG-00040	M6-QG-00040	N	N	-	Liquid	5.33	6.7	38.5	177.0	
1	QG	L	599	S1E	10	1-QG-L599-S1E-10"	1-QG-L671	1-QG-L596	M6-QG-00040	M6-QG-00040	N	N	-	Vapour	5.33	6.7	38.5	177.0	NNF
1	QG	L	600	S3E	12	1-QG-L600-S3E-12"	MV-105	1-QG-L602, 1-QG-L601	M6-QG-00070	M6-QG-00070	N	N	-	Vapour	22.10	25.9	38.5	177.0	PSV INLET
1	QG	L	601	S1E	12	1-QG-L601-S1E-12"	1-QG-L600	1-QG-L602	M6-QG-00070	M6-QG-00070	N	N	-			0.1		100.0	NNF
1	QG	L	602	S1E	20	1-QG-L602-S1E-20"	1-QG-L600, 1-QG-L601	1-QG=L666	M6-QG-00070	M6-QG-00070	N	N	-			0.1		100.0	NNF, NO POCKETS
1	QG	L	603	S3E	14	1-QG-L603-S3E-14"	MV-105	MS-104, 1-QG-L645	M6-QG-00070	M6-QG-00080	N	N	-	Vapour	22.10	25.9	38.5	177.0	FREE DRAINING
1	QG	L	604	S3E	2	1-QG-L604-S3E-2"	MV-105	1-QG-L618	M6-QG-00070	M6-QG-00070	N	N	-			25.9		177.0	INTERMITTENT
1	QG	L	605	S9E	6	1-QG-L605-S9E-6"	MV-106	1-QG-L607, 1-QG-L606	M6-QG-00110	M6-QG-00110	N	N	-	Liquid	81.95	111.7	38.6	177.0	PSV INLET
1	QG	L	606	S1E	6	1-QG-L606-S1E-6"	1-QG-L605	1-QG-L607	M6-QG-00110	M6-QG-00110	N	N	-			0.1		100.0	NNF
1	QG	L	607	S1E	18	1-QG-L607-S1E-18"	1-QG-L605	1-QG-L666	M6-QG-00110	M6-QG-00110	N	N	-			0.1		100.0	NNF
1	QG	L	609	S9E	10	1-QG-L609-S9E-10"	1-QG-L571	1-QG-L634	M6-QG-00110	M6-QG-00110	N	N	-	Liquid	81.88	111.7	38.6	177.0	
1	QG	L	611	SLE	10	1-QG-L611-SLE-10"	1-QG-L571	MP-108A	M6-QG-00110	M6-QG-00110	N	N	-	Liquid	81.88	244.7	38.6	106.0	
1	QG	L	614	SLE	6	1-QG-L614-SLE-6"	1-QG-L573	1-QG-L615	M6-QG-00110	M6-QG-00110	N	N	-	Liquid	150.99	244.7	78.0	106.0	MIN FLOW
1	QG	L	615	S9E	6	1-QG-L615-S9E-6"	1-QG-L614, 1-QG-L642	MV-106	M6-QG-00110	M6-QG-00110	N	N	-	Liquid	81.88	111.7	38.6	177.0	MIN FLOW
1	QG	L	616	S1E	1	1-QG-L616-S1E-1"	1-QG-L592, 1-QG-L617	1-QG-L666	M6-QG-00110	M6-QG-00110	N	N	-			0.1		100.0	NNF
1	QG	L	617	S1E	1	1-QG-L617-S1E-1"	1-QG-L593	1-QG-L616	M6-QG-00110	M6-QG-00110	N	N	-			0.1		100.0	NNF
1	QG	L	618	S1E	2	1-QG-L618-S1E-2"	1-QG-L604	MV-104	M6-QG-00070	M6-QG-00040	N	N	-			6.7		177.0	INTERMITTENT
1	QG	L	619	S1E	16	1-QG-L619-S1E-16"	1-QG-L559	1-QG-L552	M6-QG-00050	M6-QG-00030	N	N	-	Vapour	6.02	6.7	176.7	205.0	ANTI-SURGE, FREE DRAINING, NNF
1	QG	L	620	S3E	12	1-QG-L620-S3E-12"	1-QG-L567	1-QG-L558	M6-QG-00090	M6-QG-00060	N	N	-	Vapour	22.78	25.9	176.7	205.0	ANTI-SURGE, FREE DRAINING, NNF
1	QG	L	634	SLE	10	1-QG-L634-SLE-10"	1-QG-L609	MP-108B	M6-QG-00110	M6-QG-00110	N	N	-	Liquid	81.88	244.7	38.6	106.0	
1	QG	L	641	SLE	6	1-QG-L641-SLE-6"	1-QG-591	1-QG-L642	M6-QG-00110	M6-QG-00110	N	N	-	Liquid	150.99	244.7	78.0	106.0	MIN FLOW
1	QG	L	642	S9E	6	1-QG-L642-S9E-6"	1-QG-L641	1-QG-L615	M6-QG-00110	M6-QG-00110	N	N	-	Liquid	81.88	111.7	38.6	177.0	MIN FLOW
1	QG	L	643	S1E	24	1-QG-L643-S1E-24"	MV-202	1-QG-L644, 1-QG-L647	M6-CN-00140	M6-QG-00010	N	N	-	Vapour	1.08	3.5	48.7	105.0	NO POCKETS
1	QG	L	644	S1E	24	1-QG-L644-S1E-24"	1-CN-L643	MV-203	M6-QG-00010	M6-QG-00010	N	N	-	Vapour	1.08	3.5	48.7	105.0	
1	QG	L	645	S3E	4	1-QG-L645-S3E-4"	1-QG-L603	1-QG-L646	M6-QG-00070	M6-QG-00070	N	N	-	Vapour	22.10	25.9	38.5	177.0	DEPRESSURING LINE
1	QG	L	646	S1E	6	1-QG-L646-S1E-6"	1-QG-L645	1-QG-L666	M6-QG-00070	M6-QG-00070	N	N	-			0.1		100.0	
1	QG	L	649	C1E	1	1-QG-L649-C1E-1"	ME-112	DRAINS	M6-QG-00030	M6-XW-00001	Y	ET	1			0.1		80.0	NNF
1	QG	L	650	C1E	8	1-QG-L650-C1E-8"	ME-112	1-QG-L663	M6-QG-00030	M6-QG-00100	N	N	-	Vapour	1.37	10	125.8	177.0	
1	QG	L	651	C1E	4	1-QG-L651-C1E-4"	ME-112	1-QG-L652	M6-QG-00030	M6-QG-00030	N	N	-	Vapour	1.37	10	125.8	177.0	PSV INLET
1	QG	L	652	C1E	6	1-QG-L652-C1E-6"	1-QG-L651	VENT TO SAFE LOCATION	M6-QG-00030	M6-QG-00030	N	N	-			1		80.0	NNF
1	QG	L	653	C1E	2	1-QG-L653-C1E-2"	1-SC-L028	ME-112	M6-SC-00001	M6-QG-00030	N	N	-	Liquid	1.67	12	98.9	150.0	
1	QG	L	654	C1E	2	1-QG-L654-C1E-2"	1-SC-L029	1-QG-L690	M6-SC-00001	M6-QG-00060	N	N	-	Liquid	1.67	12	98.9	150.0	
1	QG	L	656	C1E	1	1-QG-L656-C1E-1"	ME-114	DRAINS	M6-QG-00060	M6-XW-00001	Y	ET	1			0.1		80.0	NNF
1	QG	L	657	C1E	8	1-QG-L657-C1E-8"	1-QG-L691	1-QG-L663	M6-QG-00060	M6-QG-00100	N	N	-	Vapour	1.37	10	125.8	177.0	
1	QG	L	658	C1E	4	1-QG-L658-C1E-4"	ME-114	1-QG-L659	M6-QG-00060	M6-QG-00060	N	N	-	Vapour	1.37	10	125.8	177.0	PSV INLET
1	QG	L	659	C1E	6	1-QG-L659-C1E-6"	1-QG-L658	VENT TO SAFE LOCATION	M6-QG-00060	M6-QG-00060	N	N	-			1		80.0	NNF
1	QG	L	660	C1E	2	1-QG-L660-C1E-2"	1-SC-L030	1-QG-L692	M6-SC-00001	M6-QG-00100	N	N	-	Liquid	1.67	12	98.9	150.0	
1	QG	L	662	C1E	1	1-QG-L662-C1E-1"	ME-116	DRAINS	M6-QG-00100	M6-XW-00001	Y	ET	1			0.1		80.0	NNF
1	QG	L	663	C1E	10	1-QG-L663-C1E-10"	1-QG-L673, 1-QG-L657, 1-QG-L650	ME-109, 1-QG-L694	M6-QG-00100	M6-CN-00100	N	N	-	Vapour	1.37	10	125.8	177.0	
1	QG	L	664	C1E	4	1-QG-L664-C1E-4"	ME-116	1-QG-L665	M6-QG-00100	M6-QG-00100	N	N	-	Vapour	1.37	10	125.8	177.0	PSV INLET
1	QG	L	665	C1E	6	1-QG-L665-C1E-6"	1-QG-L664	VENT TO SAFE LOCATION	M6-QG-00100	M6-QG-00100	N	N	-			1		80.0	NNF
1	QG	L	666	S1E	24	1-QG-L666-S1E-24"	CO2 DRY VENT HEADER FROM COMPR. SYSTEM	T-101 STACK	M6-QG-00110	M6-CN-00020	N	N	-	Vapour	-0.01	0.1	49.3	100.0	NNF, DRY VENT HEADER
1	QG	L	667	S1E	10	1-QG-L667-S1E-10"	1-QG-L583	1-QG-L584	M6-QG-00010	M6-QG-00010	N	N	-	Vapour	1.08	3.5	48.7	105.0	PSV INLET
1	QG	L	668	S1E	10	1-QG-L668-S1E-10"	1-QG-L583	1-QG-L669, 1QG-L594	M6-QG-00010	M6-QG-00010	N	N	-	Vapour	1.08	3.5	48.7	105.0	PSV INLET
1	QG	L	669	S1E	12	1-QG-L669-S1E-12"	1-QG-L668, 1QG-L594	1-QG-L666	M6-QG-00010	M6-QG-00010	N	N	-			0.1		100.0	NNF, NO POCKETS
1	QG	L	670	S1E	10	1-QG-L670-S1E-10"	1-QG-L595	1-QG-L672	M6-QG-00040	M6-QG-00040	N	N	-	Vapour	5.33	6.7	38.5	177.0	PSV INLET
1	QG	L	671	S1E	10	1-QG-L671-S1E-10"	1-QG-L595	1-QG-L596, 1-QG-L599	M6-QG-00040	M6-QG-00040	N	N	-	Vapour	5.33	6.7	38.5	177.0	PSV INLET
1	QG	L	672	S1E	12	1-QG-L672-S1E-12"	1-QG-L670	1-QG-L666	M6-QG-00040	M6-QG-00040	N	N	-			0.1		100.0	NNF
1	QG	L	673	C1E	8	1-QG-L673-C1E-8"	1-QG-L693	1-QG-L663	M6-QG-00100	M6-QG-00100	N	N	-	Vapour	1.37	10	125.8	177.0	

Line Designation Table
FEED Study for Carbon Capture Plant Retrofit
Job No.: 26301
Document No.: 26031-000-M0X-0000-00002
Rev. No.: 00

Unit	Bechtel System Code	Comm Group Code	Seq No.	Line Class	Dia (inches)	Line Number	From	To	P&ID From	P&ID To	Insulated (Y/N)	Heat Trace	Insulation Thickness (in)	Phase	Operating Press (Barg)	Design Press (Barg)	Operating Temp (Deg C)	Design Temp (Deg C)	Remarks
1	QG	L	674	S1E	20	1-QG-L674-S1E-20"	MS-104	1-QG-L666	M6-QG-00080	M6-QG-00080	N	N	-			0.1		100.0	NNF
1	QG	L	675	S1E	20	1-QG-L675-S1E-20"	MS-104	1-QG-L666	M6-QG-00080	M6-QG-00080	N	N	-			0.1		100.0	NNF
1	QG	L	676	S1E	24	1-QG-L676-S1E-24"	CO2 DRY VENT HEADER FROM COMPR. SYSTEM	T-102 STACK	M6-QG-00010		N	N	-			0.1		100.0	NNF, DRY VENT HEADER
1	QG	L	677	S1E	2	1-QG-L677-S1E-2"	1-QG-L580	DRAINS	M6-QG-00010	M6-XW-00001	Y	ET	1			0.1		80.0	NNF
1	QG	L	678	S1E	2	1-QG-L678-S1E-2"	1-QG-L598	1-WP-L017, 1-WP-L022	M6-QG-00040	M6-WP-00010	N	N	-	Liquid	5.33	6	38.5	80.0	
1	QG	L	680	S1E	14	1-QG-L680-S1E-14"	MS-104	1-QG-L666	M6-QG-00080	M6-QG-00080	N	N	-			0.1		100.0	DEPRESSURING LINE
1	QG	L	685	S9E	6	1-QG-L685-S9E-6"	1-QG-L573	1-QG-L666	M6-QG-00110	M6-QG-00110	N	N	-			111.7		177.0	DEPRESSURING LINE
1	QG	L	690	C3E	2	1-QG-L690-C3E-2"	1-QG-L654	ME-114	M6-QG-0060	M6-QG-0060	N	N	-	Liquid	1.67	20	98.9	177.0	
1	QG	L	691	C3E	8	1-QG-L691-C3E-8"	ME-114	1-QG-L657	M6-QG-0060	M6-QG-0060	N	N	-	Vapour	1.37	20	125.8	177.0	
1	QG	L	692	C9E	2	1-QG-L692-C9E-2"	1-QG-L660	ME-116	M6-QG-00100	M6-QG-00100	N	N	-	Liquid	1.67	86	98.9	177.0	
1	QG	L	693	C9E	8	1-QG-L693-C9E-8"	ME-116	1-QG-L673	M6-QG-00100	M6-QG-00100	N	N	-	Vapour	1.37	86	125.8	177.0	
1	QG	L	694	C1E	2	1-QG-L694-C1E-2"	1-QG-L663	1-QG-L695	M6-QG-00100	M6-QG-00100	N	N	-	Vapour	1.37	10	125.8	177.0	PSV INLET
1	QG	L	695	C1E	3	1-QG-L695-C1E-3"	1-QG-L694	VENT TO SAFE LOCATION	M6-QG-00100	M6-QG-00100	N	N	-			1		80.0	VENT, NNF
1	QG	L	702	S1E	8	1-QG-L702-S1E-8"	1-QG-L666	1-QG-L703	M6-QG-00010	M6-QG-00010	Y	ET	1	Vapour	-0.01	0.1	49.3	100.0	NNF, HEADER DRIP LEG
1	QG	L	703	S1E	2	1-QG-L703-S1E-2"	1-QG-L702	DRAINS	M6-QG-00010	M6-XW-00001	Y	ET	1	Vapour	-0.01	0.1	49.3	100.0	NNF
1	SC	L	003	C1E	4	1-SC-L003-C1E-4"	ME-110D	1-SC-L046	M6-CN-00150	M6-SC-00001	Y	ET	1	Liquid	2.02	5	133.9	160.0	
1	SC	L	004	C1E	4	1-SC-L004-C1E-4"	ME-110C	1-SC-L005	M6-CN-00150	M6-SC-00001	Y	ET	1	Liquid	2.02	5	133.9	160.0	
1	SC	L	005	C1E	18	1-SC-L005-C1E-18"	1-SC-L004, 1-SC-L046	1-SC-L046, 1-SC-L018	M6-SC-00001	M6-SC-00001	Y	ET	1	Liquid	2.02	5	133.9	160.0	
1	SC	L	006	C1E	2	1-SC-L006-C1E-2"	ME-109	1-SC-L037	M6-CN-00100	M6-SC-00001	Y	ET	1	Liquid	1.27	5	124.4	160.0	
1	SC	L	007	C1E	2	1-SC-L007-C1E-2"	1-SC-L006	1-SC-L006	M6-SC-00001	M6-SC-00001	Y	ET	1	Liquid	1.27	5	124.4	160.0	BYPASS, NNF
1	SC	L	009	C1E	6	1-SC-L009-C1E-6"	1-SC-L014	1-SC-L014	M6-SC-00001	M6-SC-00001	Y	ET	1	Liquid	2.02	5	133.9	160.0	BYPASS, NNF
1	SC	L	010	C1E	4	1-SC-L010-C1E-4"	ME-110B	1-SC-L013	M6-CN-00150	M6-SC-00001	Y	ET	1	Liquid	2.02	5	133.9	160.0	
1	SC	L	011	C1E	4	1-SC-L011-C1E-4"	ME-110A	1-SC-L012	M6-CN-00150	M6-SC-00001	Y	ET	1	Liquid	2.02	5	133.9	160.0	
1	SC	L	012	C1E	18	1-SC-L012-C1E-18"	1-SC-L011, 1-SC-L013	1-SC-L013, 1-SC-L017	M6-SC-00001	M6-SC-00001	Y	ET	1	Liquid	2.02	5	133.9	160.0	
1	SC	L	013	C1E	4	1-SC-L013-C1E-4"	1-SC-L012, 1-SC-L010	1-SC-L014, 1-SC-L012	M6-SC-00001	M6-SC-00001	Y	ET	1	Liquid	2.02	5	133.9	160.0	
1	SC	L	014	C1E	6	1-SC-L014-C1E-6"	1-SC-L013, 1-SC-L009	1-SC-L037, 1-SC-L009	M6-SC-00001	M6-SC-00001	Y	ET	1	Liquid	1.38	5	134.7	160.0	2-PHASE FLOW, SLOPED
1	SC	L	016	C1E	4	1-SC-L016-C1E-4"	ME-110E	1-SC-L052		M6-SC-00001	Y	ET	1	Liquid	2.02	5	133.9	160.0	
1	SC	L	017	C1E	4	1-SC-L017-C1E-4"	1-SC-L012	1-AB-L011	M6-SC-00001	M6-AB-00001	Y	ET	1	Vapour	2.12	5	135.0	160.0	BALANCE LINE
1	SC	L	018	C1E	4	1-SC-L018-C1E-4"	1-SC-L005	1-AB-L015	M6-SC-00001	M6-AB-00001	Y	ET	1	Vapour	2.12	5	135.0	160.0	BALANCE LINE
1	SC	L	019	C1E	4	1-SC-L019-C1E-4"	1-SC-L052	1-AB-L019	M6-SC-00001	M6-AB-00002	Y	ET	1	Vapour	2.12	5	135.0	160.0	BALANCE LINE
1	SC	L	020	C1E	4	1-SC-L020-C1E-4"	ME-110H	1-SC-L053		M6-SC-00001	Y	ET	1	Liquid	2.02	5	133.9	160.0	
1	SC	L	021	C1E	4	1-SC-L021-C1E-4"	ME-110G	1-SC-L022		M6-SC-00001	Y	ET	1	Liquid	2.02	5	133.9	160.0	
1	SC	L	022	C1E	18	1-SC-L022-C1E-18"	1-SC-L021, 1-SC-L053	1-SC-L053, 1-SC-L040	M6-SC-00001	M6-SC-00001	Y	ET	1	Liquid	2.02	5	133.9	160.0	
1	SC	L	025	C1E	6	1-SC-L025-C1E-6"	1-SC-L053, 1-SC-L026	1-SC-L037, 1-SC-L026	M6-SC-00001	M6-SC-00001	Y	ET	1	Liquid	1.38	5	134.7	160.0	2-PHASE FLOW, SLOPED
1	SC	L	026	C1E	6	1-SC-L026-C1E-6"	1-SC-L025	1-SC-L025	M6-SC-00001	M6-SC-00001	Y	ET	1	Liquid	2.02	5	133.9	160.0	BYPASS, NNF
1	SC	L	027	C1E	3	1-SC-L027-C1E-3"	OSBL BFW	1-SC-L028, 1-SC-L029, 1-SC-L030, 1-SC-L061		M6-SC-00001	Y	ET	1	Liquid	1.67	12	98.9	150.0	
1	SC	L	028	C1E	2	1-SC-L028-C1E-2"	1-SC-L027	1-QG-L653	M6-SC-00001	M6-SC-00001	Y	ET	1	Liquid	1.67	12	98.9	150.0	
1	SC	L	029	C1E	2	1-SC-L029-C1E-2"	1-SC-L027	1-QG-L654	M6-SC-00001	M6-SC-00001	Y	ET	1	Liquid	1.67	12	98.9	150.0	
1	SC	L	030	C1E	2	1-SC-L030-C1E-2"	1-SC-L027	1-QG-L660	M6-SC-00001	M6-SC-00001	Y	ET	1	Liquid	1.67	12	98.9	150.0	
1	SC	L	031	C1E	2	1-SC-L031-C1E-2"	1-SC-L039	SAMPLING SYSTEM	M6-SC-00001	M6-SC-00001	Y	ET	1	Liquid	1.38	5	134.7	160.0	NNF
1	SC	L	037	C1E	10	1-SC-L037-C1E-10"	HX BLOWDOWN, CONDENSATE COLLECTION	1-SC-L039	M6-SC-00001	M6-SC-00001	Y	ET	1	Liquid	1.38	5	134.7	160.0	HEADER
1	SC	L	039	C1E	10	1-SC-L039-C1E-10"	1-SC-L037	CONDENSATE TO OSBL, 1-SC-L031	M6-SC-00001	M6-SC-00001	Y	ET	1	Liquid	1.38	5	134.7	160.0	
1	SC	L	040	C1E	4	1-SC-L040-C1E-4"	1-SC-L022	1-AB-L023	M6-SC-00001	M6-AB-00002	Y	ET	1	Vapour	2.12	5	135.0	160.0	BALANCE LINE
1	SC	L	041	C1E	3	1-SC-L041-C1E-3"	MS-102	1-SC-L037	M6-CN-00180	M6-SC-00001	Y	ET	1	Liquid	5.00	5	158.8	160.0	SLOPED
1	SC	L	045	C1E	4	1-SC-L045-C1E-4"	ME-110F	1-SC-L049		M6-SC-00001	Y	ET	1	Liquid	2.02	5	133.9	160.0	
1	SC	L	046	C1E	4	1-SC-L046-C1E-4"	1-SC-L005, 1-SC-L003	1-SC-L047, 1-SC-L005	M6-SC-00001	M6-SC-00001	Y	ET	1	Liquid	2.02	5	133.9	160.0	
1	SC	L	047	C1E	6	1-SC-L047-C1E-6"	1-SC-L046, 1-SC-L048	1-SC-L037, 1-SC-L048	M6-SC-00001	M6-SC-00001	Y	ET	1	Liquid	1.38	5	134.7	160.0	2-PHASE FLOW, SLOPED
1	SC	L	048	C1E	6	1-SC-L048-C1E-6"	1-SC-L047	1-SC-L047	M6-SC-00001	M6-SC-00001	Y	ET	1	Liquid	2.02	5	133.9	160.0	BYPASS, NNF
1	SC	L	049	C1E	4	1-SC-L049-C1E-4"	1-SC-L052, 1-SC-L049	1-SC-L050, 1-SC-L052	M6-SC-00001	M6-SC-00001	Y	ET	1	Liquid	2.02	5	133.9	160.0	
1	SC	L	050	C1E	6	1-SC-L050-C1E-6"	1-SC-L049, 1-SC-L051	1-SC-L037, 1-SC-L051	M6-SC-00001	M6-SC-00001	Y	ET	1	Liquid	1.38	5	134.7	160.0	2-PHASE FLOW, SLOPED
1	SC	L	051	C1E	6	1-SC-L051-C1E-6"	1-SC-L050	1-SC-L051	M6-SC-00001	M6-SC-00001	Y	ET	1	Liquid	2.02	5	133.9	160.0	BYPASS, NNF
1	SC	L	052	C1E	18	1-SC-L052-C1E-18"	1-SC-L016, 1-SC-L049	1-SC-L049, 1-SC-L019	M6-SC-00001	M6-SC-00001	Y	ET	1	Liquid	2.02	5	133.9	160.0	
1	SC	L	053	C1E	4	1-SC-L053-C1E-4"	1-SC-L022, 1-SC-L020	1-SC-L025, 1-SC-L022	M6-SC-00001	M6-SC-00001	Y	ET	1	Liquid	2.02	5	133.9	160.0	
1	SC	L	055	C1E	2	1-SC-L055-C1E-2"	1-SC-L056, 1-SC-L058, 1-SC-L057	1-SC-L072	M6-SC-00001	M6-SC-00001	Y	ET	1	Liquid	1.38	5	125.8	160.0	BLOWDOWN, NNF
1	SC	L	056	C1E	1	1-SC-L056-C1E-1"	ME-112	1-SC-L055	M6-QG-00030	M6-SC-00001	Y	ET	1	Liquid	1.38	5	125.8	160.0	BLOWDOWN, NNF
1	SC	L	057	C9E	1	1-SC-L057-C9E-1"	ME-114	1-SC-L055	M6-QG-00060	M6-SC-00001	Y	ET	1	Liquid	1.38	86	125.8	177.0	BLOWDOWN, NNF
1	SC	L	058	C3E	1	1-SC-L058-C3E-1"	ME-116	1-SC-L055	M6-QG-00100	M6-SC-00001	Y	ET	1	Liquid	1.38	20	125.8	177.0	BLOWDOWN, NNF
1	SC	L	061	C1E	2.5	1-SC-L061-C1E-2.5"	1-SC-L027	1-AB-L010	M6-SC-00001	M6-AB-00001	Y	ET	1	Liquid	1.67	12	98.9	150.0	
1	SC	L	070	C1E	10	1-SC-L070-C1E-10"	1-WL-L175	1-SC-L075	M6-SC-00001	M6-SC-00001	Y	ET	1	Liquid	1.38	5	134.7	160.0	QUENCH LINE, INTERMITTENT

Line Designation Table
FEED Study for Carbon Capture Plant Retrofit
Job No.: 26301
Document No.: 26031-000-M0X-0000-00002
Rev. No.: 00

Unit	Bechtel System Code	Comm Group Code	Seq No.	Line Class	Dia (inches)	Line Number	From	To	P&ID From	P&ID To	Insulated (Y/N)	Heat Trace	Insulation Thickness (in)	Phase	Operating Press (Barg)	Design Press (Barg)	Operating Temp (Deg C)	Design Temp (Deg C)	Remarks
1	SC	L	072	C1E	2	1-SC-L072-C1E-2"	1-SC-L055	1-WP-L017	M6-SC-00001	M6-WP-00010	Y	ET	1	Liquid	3.12	6	20.0	80.0	BLOWDOWN, NNF
1	SC	L	075	C1E	12	1-SC-L075-C1E-12"	1-SC-L039, 1-SC-L070	DRAINS	M6-SC-00001	M6-XW-00002	Y	ET	1	Liquid	1.38	5	134.7	160.0	CONDENSATE DUMP LINE, NNF
1	WL	L	005	5SJ0	60	1-WL-L005-5SJ0-60"	COOLING WATER SUPPLY FROM OSBL	1-WL-L006, 1-WL-L011, 1-WL-L128		M6-WL-00002	N	N	-	Liquid	2.00	5.2	28.6	80.0	BURIED PIPE, NOTE 6
1	WL	L	006	5SJ0	48	1-WL-L006-5SJ0-48"	1-WL-L005	1-WL-L007, 1-WL-L008, 1-WL-L009	M6-WL-00002	M6-WL-00002	N	N	-	Liquid	1.99	5.2	28.6	80.0	BURIED PIPE, NOTE 6
1	WL	L	007	ESD0	36	1-WL-L007-ESD0-36"	1-WL-L006	1-WL-L056	M6-WL-00002	M6-WL-00002	N	N	-	Liquid	1.99	5.2	28.6	80.0	BURIED PIPE, NOTE 9
1	WL	L	008	ESD0	36	1-WL-L008-ESD0-36"	1-WL-L006	1-WL-L057	M6-WL-00002	M6-WL-00002	N	N	-	Liquid	1.99	5.2	28.6	80.0	BURIED PIPE, NOTE 9
1	WL	L	009	ESD0	16	1-WL-L009-ESD0-16"	1-WL-L006	1-WL-L058	M6-WL-00002	M6-WL-00002	N	N	-	Liquid	1.99	5.2	28.6	80.0	BURIED PIPE, NOTE 9
1	WL	L	011	ESD0	36	1-WL-L011-ESD0-36"	1-WL-L005	1-WL-L078	M6-WL-00002	M6-WL-00002	N	N	-	Liquid	1.99	5.2	28.6	80.0	BURIED PIPE, NOTE 9
1	WL	L	012	C1E	24	1-WL-L012-C1E-24"	1-WL-L124, 1-WL-L111, 1-WL-L110, 1-WL-L100	1-WL-L066	M6-WL-00003	M6-WL-00003	N	N	-	Liquid	0.95	5.2	39.4	80.0	
1	WL	L	013	ESD0	36	1-WL-L013-ESD0-36"	1-WL-L062	1-WL-L020	M6-WL-00003	M6-WL-00003	N	N	-	Liquid	1.30	5.2	39.4	80.0	BURIED PIPE, NOTE 9
1	WL	L	014	ESD0	36	1-WL-L014-ESD0-36"	1-WL-L063	1-WL-L020	M6-WL-00003	M6-WL-00003	N	N	-	Liquid	1.30	5.2	39.4	80.0	BURIED PIPE, NOTE 9
1	WL	L	015	ESD0	12	1-WL-L015-ESD0-12"	1-WL-L064	1-WL-L020	M6-WL-00003	M6-WL-00003	N	N	-	Liquid	1.30	5.2	39.4	80.0	BURIED PIPE, NOTE 9
1	WL	L	017	ESD0	36	1-WL-L017-ESD0-36"	1-WL-L066	1-WL-L021	M6-WL-00003	M6-WL-00003	N	N	-	Liquid	0.95	5.2	39.4	80.0	BURIED PIPE, NOTE 9
1	WL	L	018	ESD0	20	1-WL-L018-ESD0-20"	1-WL-L067	1-WL-L021	M6-WL-00003	M6-WL-00003	N	N	-	Liquid	1.00	5.2	39.4	80.0	BURIED PIPE, NOTE 9
1	WL	L	020	5SJ0	48	1-WL-L020-5SJ0-48"	1-WL-L013, 1-WL-L014, 1-WL-L015	1-WL-L021	M6-WL-00003	M6-WL-00003	N	N	-	Liquid	1.30	5.2	39.4	80.0	BURIED PIPE, NOTE 6
1	WL	L	021	5SJ0	60	1-WL-L021-5SJ0-60"	1-WL-L020, 1-WL-L017, 1-WL-L018	COOLING WATER TO OSBL	M6-WL-00003		N	N	-	Liquid	1.00	5.2	39.4	80.0	BURIED PIPE, NOTE 6
1	WL	L	024	C1E	8	1-WL-L024-C1E-8"	CHEMICAL CLEANING CONN.	1-WL-L056	M6-WL-00002	M6-WL-00002	Y	ET	1	Liquid	1.99	5.2	28.6	80.0	NNF
1	WL	L	025	C1E	1	1-WL-L025-C1E-1"	1-WL-L056	1-WL-L036	M6-WL-00002	M6-WL-00002	Y	ET	1	Liquid	1.99	5.2	28.6	80.0	PSV INLET
1	WL	L	026	C1E	8	1-WL-L026-C1E-8"	CHEMICAL CLEANING CONN.	1-WL-L057	M6-WL-00002	M6-WL-00002	Y	ET	1	Liquid	1.99	5.2	28.6	80.0	NNF
1	WL	L	027	C1E	1	1-WL-L027-C1E-1"	1-WL-L057	1-WL-L037	M6-WL-00002	M6-WL-00002	Y	ET	1	Liquid	1.99	5.2	28.6	80.0	PSV INLET
1	WL	L	028	C1E	4	1-WL-L028-C1E-4"	CHEMICAL CLEANING CONN.	1-WL-L058	M6-WL-00002	M6-WL-00002	Y	ET	1	Liquid	1.99	5.2	28.6	80.0	NNF
1	WL	L	029	C1E	1	1-WL-L029-C1E-1"	1-WL-L058	1-WL-L038	M6-WL-00002	M6-WL-00002	Y	ET	1	Liquid	1.99	5.2	28.6	80.0	PSV INLET
1	WL	L	032	C1E	4	1-WL-L032-C1E-4"	CHEMICAL CLEANING CONN.	1-WL-L060	M6-WL-00002	M6-WL-00002	Y	ET	1	Liquid	1.99	5.2	28.6	109.0	NNF
1	WL	L	033	C1E	1	1-WL-L033-C1E-1"	1-WL-L060	1-WL-L040	M6-WL-00002	M6-WL-00002	Y	ET	1	Liquid	1.99	5.2	28.6	109.0	PSV INLET
1	WL	L	034	C1E	4	1-WL-L034-C1E-4"	CHEMICAL CLEANING CONN.	1-WL-L102	M6-WL-00002	M6-WL-00002	Y	ET	1	Liquid	1.99	5.2	28.6	129.0	NNF
1	WL	L	036	C1E	1	1-WL-L036-C1E-1"	1-WL-L025	DRAINS	M6-WL-00002	M6-XW-00002	N	N	-			0.1		80.0	NNF
1	WL	L	037	C1E	1	1-WL-L037-C1E-1"	1-WL-L027	DRAINS	M6-WL-00002	M6-XW-00002	N	N	-			0.1		80.0	NNF
1	WL	L	038	C1E	1	1-WL-L038-C1E-1"	1-WL-L029	DRAINS	M6-WL-00002	M6-XW-00002	N	N	-			0.1		80.0	NNF
1	WL	L	040	C1E	1	1-WL-L040-C1E-1"	1-WL-L033	DRAINS	M6-WL-00002	M6-XW-00002	N	N	-			0.1		80.0	NNF
1	WL	L	042	C1E	8	1-WL-L042-C1E-8"	CHEMICAL CLEANING CONN.	1-WL-L062	M6-WL-00003	M6-WL-00003	Y	ET	1	Liquid	1.30	5.2	39.4	80.0	NNF
1	WL	L	043	C1E	8	1-WL-L043-C1E-8"	CHEMICAL CLEANING CONN.	1-WL-L063	M6-WL-00003	M6-WL-00003	Y	ET	1	Liquid	1.30	5.2	39.4	80.0	NNF
1	WL	L	044	C1E	3	1-WL-L044-C1E-3"	CHEMICAL CLEANING CONN.	1-WL-L064	M6-WL-00003	M6-WL-00003	Y	ET	1	Liquid	1.30	5.2	39.4	80.0	NNF
1	WL	L	046	C1E	4	1-WL-L046-C1E-4"	CHEMICAL CLEANING CONN.	1-WL-L124	M6-WL-00003	M6-WL-00003	Y	ET	1	Liquid	0.95	5.2	39.4	109.0	NNF
1	WL	L	056	C1E	36	1-WL-L056-C1E-36"	1-WL-L007, 1-WL-L024	ME-104, 1-WL-L135, 1-WL-L025	M6-WL-00002		N	N	-	Liquid	1.99	5.2	28.6	80.0	
1	WL	L	057	C1E	36	1-WL-L057-C1E-36"	1-WL-L008, 1-WL-L026	ME-101, 1-WL-L134, 1-WL-L027	M6-WL-00002	M6-CN-00030	N	N	-	Liquid	1.99	5.2	28.6	80.0	
1	WL	L	058	C1E	12	1-WL-L058-C1E-12"	1-WL-L009, 1-WL-L028	ME-102, 1-WL-L133, 1-WL-L029	M6-WL-00002	M6-CN-00080	N	N	-	Liquid	1.99	5.2	28.6	80.0	
1	WL	L	060	C1E	16	1-WL-L060-C1E-16"	1-WL-L123, 1-WL-L032	ME-111A, 1-WL-L129, 1-WL-L033	M6-WL-00002	M6-CN-00130	N	N	-	Liquid	1.99	5.2	28.6	109.0	
1	WL	L	062	C1E	36	1-WL-L062-C1E-36"	ME-104, 1-WL-L042	1-WL-L013		M6-WL-00003	N	N	-	Liquid	1.30	5.2	39.4	80.0	
1	WL	L	063	C1E	36	1-WL-L063-C1E-36"	ME-101, 1-WL-L043	1-WL-L014	M6-CN-00030	M6-WL-00003	N	N	-	Liquid	1.30	5.2	39.4	80.0	
1	WL	L	064	C1E	12	1-WL-L064-C1E-12"	ME-102, 1-WL-L044	1-WL-L015	M6-CN-00080	M6-WL-00003	N	N	-	Liquid	1.30	5.2	39.4	80.0	
1	WL	L	066	C1E	36	1-WL-L066-C1E-36"	1-WL-L012	1-WL-L017	M6-WL-00003	M6-WL-00003	N	N	-	Liquid	0.95	5.2	39.4	80.0	
1	WL	L	067	C1E	20	1-WL-L067-C1E-20"	1-WL-L108, 1-WL-L163, 1-WL-L170	1-WL-L018	M6-WL-00003	M6-WL-00003	N	N	-	Liquid	1.00	5.2	39.4	80.0	
1	WL	L	078	C1E	36	1-WL-L078-C1E-36"	1-WL-L011	1-WL-L123	M6-WL-00002	M6-WL-00002	N	N	-	Liquid	1.99	5.2	28.6	80.0	
1	WL	L	088	C1E	16	1-WL-L088-C1E-16"	1-WL-L123, 1-WL-L093	ME-111B, 1-WL-L130, 1-WL-L096	M6-WL-00002	M6-CN-00130	N	N	-	Liquid	1.99	5.2	28.6	109.0	
1	WL	L	089	C1E	16	1-WL-L089-C1E-16"	1-WL-L123, 1-WL-L092	ME-111C, 1-WL-L131, 1-WL-L095	M6-WL-00002	M6-CN-00130	N	N	-	Liquid	1.99	5.2	28.6	109.0	
1	WL	L	090	C1E	16	1-WL-L090-C1E-16"	1-WL-L123, 1-WL-L091	ME-111D, 1-WL-L132, 1-WL-L094	M6-WL-00002	M6-CN-00130	N	N	-	Liquid	1.99	5.2	28.6	109.0	
1	WL	L	091	C1E	4	1-WL-L091-C1E-4"	CHEMICAL CLEANING CONN.	1-WL-L090	M6-WL-00002	M6-WL-00002	Y	ET	1	Liquid	1.99	5.2	28.6	109.0	NNF
1	WL	L	092	C1E	4	1-WL-L092-C1E-4"	CHEMICAL CLEANING CONN.	1-WL-L089	M6-WL-00002	M6-WL-00002	Y	ET	1	Liquid	1.99	5.2	28.6	109.0	NNF
1	WL	L	093	C1E	4	1-WL-L093-C1E-4"	CHEMICAL CLEANING CONN.	1-WL-L088	M6-WL-00002	M6-WL-00002	Y	ET	1	Liquid	1.99	5.2	28.6	109.0	NNF
1	WL	L	094	C1E	1	1-WL-L094-C1E-1"	1-WL-L090	1-WL-L099	M6-WL-00002	M6-WL-00002	Y	ET	1	Liquid	1.99	5.2	28.6	109.0	PSV INLET
1	WL	L	095	C1E	1	1-WL-L095-C1E-1"	1-WL-L089	1-WL-L098	M6-WL-00002	M6-WL-00002	Y	ET	1	Liquid	1.99	5.2	28.6	109.0	PSV INLET
1	WL	L	096	C1E	1	1-WL-L096-C1E-1"	1-WL-L088	1-WL-L097	M6-WL-00002	M6-WL-00002	Y	ET	1	Liquid	1.99	5.2	28.6	109.0	PSV INLET
1	WL	L	097	C1E	1	1-WL-L097-C1E-1"	1-WL-L096	DRAINS	M6-WL-00002	M6-XW-00002	N	N	-			0.1		80.0	NNF
1	WL	L	098	C1E	1	1-WL-L098-C1E-1"	1-WL-L095	DRAINS	M6-WL-00002	M6-XW-00002	N	N	-			0.1		80.0	NNF
1	WL	L	099	C1E	1	1-WL-L099-C1E-1"	1-WL-L094	DRAINS	M6-WL-00002	M6-XW-00002	N	N	-			0.1		80.0	NNF
1	WL	L	100	C1E	16	1-WL-L100-C1E-16"	ME-111D, 1-WL-L125	1-WL-L012	M6-CN-00130	M6-WL-00003	N	N	-	Liquid	0.95	5.2	39.4	80.0	
1	WL	L	101	C1E	14	1-WL-L101-C1E-14"	1-WL-L141	1-WL-L102, 1-WL-L103	M6-WL-00002	M6-WL-00002	N	N	-	Liquid	2.00	5.2	28.6	80.0	
1	WL	L	102	C1E	10	1-WL-L102-C1E-10"	1-WL-L101, 1-WL-L034	ME-113	M6-WL-00002	M6-QG-00030	N	N	-	Liquid	1.99	5.2	28.6	129.0	
1	WL	L	103	C3E	10	1-WL-L103-C3E-10"	1-WL-L101, 1-WL-L116	ME-115	M6-WL-00002	M6-QG-00060	N	N	-	Liquid	1.99	20	28.6	129.0	

Line Designation Table
FEED Study for Carbon Capture Plant Retrofit
Job No.: 26301
Document No.: 26031-000-M0X-0000-00002
Rev. No.: 00

Unit	Bechtel System Code	Comm Group Code	Seq No.	Line Class	Dia (inches)	Line Number	From	To	P&ID From	P&ID To	Insulated (Y/N)	Heat Trace	Insulation Thickness (in)	Phase	Operating Press (Barg)	Design Press (Barg)	Operating Temp (Deg C)	Design Temp (Deg C)	Remarks
1	WL	L	104	C9E	14	1-WL-L104-C9E-14"	1-WL-L141, 1-WL-L117	ME-117	M6-WL-00002	M6-QG-00100	N	N	-	Liquid	1.99	86	28.6	129.0	
1	WL	L	105	C1E	10	1-WL-L105-C1E-10"	ME-113, 1-WL-L118	1-WL-L160, 1-WL-L138, 1-WL-L113	M6-QG-00030	M6-WL-00003	N	N	-	Liquid	1.30	5.2	39.4	129.0	
1	WL	L	106	C3E	10	1-WL-L106-C3E-10"	ME-115, 1-WL-L119	1-WL-L161, 1-WL-L137, 1-WL-L114	M6-QG-00060	M6-WL-00003	N	N	-	Liquid	1.30	20	39.4	129.0	
1	WL	L	107	C9E	14	1-WL-L107-C9E-14"	ME-117, 1-WL-L120	1-WL-L162, 1-WL-L136, 1-WL-L115	M6-QG-00100	M6-WL-00003	N	N	-	Liquid	1.30	86	39.4	129.0	
1	WL	L	108	C1E	14	1-WL-L108-C1E-14"	1-WL-L160, 1-WL-L161, 1-WL-L162	1-WL-L067, 1-WL-L176	M6-WL-00003	M6-WL-00003	N	N	-	Liquid	1.00	5.2	39.4	80.0	
1	WL	L	110	C1E	16	1-WL-L110-C1E-16"	ME-111C, 1-WL-L126	1-WL-L012	M6-CN-00130	M6-WL-00003	N	N	-	Liquid	0.95	5.2	39.4	80.0	
1	WL	L	111	C1E	16	1-WL-L111-C1E-16"	ME-111B, 1-WL-127	1-WL-L012	M6-CN-00130	M6-WL-00003	N	N	-	Liquid	0.95	5.2	39.4	80.0	
1	WL	L	112	C1E	1	1-WL-L112-C1E-1"	1-WL-L115	DRAINS	M6-WL-00003	M6-WL-00003	N	N	-			0.1		80.0	NNF
1	WL	L	113	C1E	1	1-WL-L113-C1E-1"	1-WL-L105	1-WL-L140	M6-WL-00003	M6-WL-00003	Y	ET	1	Liquid	1.30	5.2	39.4	129.0	PSV INLET
1	WL	L	114	C3E	1	1-WL-L114-C3E-1"	1-WL-L106	1-WL-L139	M6-WL-00003	M6-WL-00003	Y	ET	1	Liquid	1.30	20	39.4	129.0	PSV INLET
1	WL	L	115	C9E	1	1-WL-L115-C9E-1"	1-WL-L107	1-WL-L112	M6-WL-00003	M6-WL-00003	Y	ET	1	Liquid	1.30	86	39.4	129.0	PSV INLET
1	WL	L	116	C3E	4	1-WL-L116-C3E-4"	CHEMICAL CLEANING CONN.	1-WL-L103	M6-WL-00002	M6-WL-00002	Y	ET	1	Liquid	1.99	20	28.6	129.0	NNF
1	WL	L	117	C9E	6	1-WL-L117-C9E-6"	CHEMICAL CLEANING CONN.	1-WL-L104	M6-WL-00002	M6-WL-00002	Y	ET	1	Liquid	1.99	86	28.6	129.0	NNF
1	WL	L	118	C1E	4	1-WL-L118-C1E-4"	CHEMICAL CLEANING CONN.	1-WL-L105	M6-WL-00003	M6-WL-00003	Y	ET	1	Liquid	1.30	5.2	39.4	129.0	NNF
1	WL	L	119	C3E	4	1-WL-L119-C3E-4"	CHEMICAL CLEANING CONN.	1-WL-L106	M6-WL-00003	M6-WL-00003	Y	ET	1	Liquid	1.30	20	39.4	129.0	NNF
1	WL	L	120	C9E	6	1-WL-L120-C9E-6"	CHEMICAL CLEANING CONN.	1-WL-L107	M6-WL-00003	M6-WL-00003	Y	ET	1	Liquid	1.30	86	39.4	129.0	NNF
1	WL	L	123	C1E	24	1-WL-L123-C1E-24"	1-WL-L078	1-WL-060, 1-WL-088, 1-WL-089, 1-WL-090	M6-WL-00002	M6-WL-00002	N	N	-	Liquid	1.99	5.2	28.6	80.0	
1	WL	L	124	C1E	16	1-WL-L124-C1E-16"	ME-111A, 1-WL-L046	1-WL-L012	M6-CN-00130	M6-WL-00003	N	N	-	Liquid	0.95	5.2	39.4	80.0	
1	WL	L	125	C1E	4	1-WL-L125-C1E-4"	CHEMICAL CLEANING CONN.	1-WL-L100	M6-WL-00003	M6-WL-00003	Y	ET	1	Liquid	0.95	5.2	39.4	109.0	NNF
1	WL	L	126	C1E	4	1-WL-L126-C1E-4"	CHEMICAL CLEANING CONN.	1-WL-L110	M6-WL-00003	M6-WL-00003	Y	ET	1	Liquid	0.95	5.2	39.4	109.0	NNF
1	WL	L	127	C1E	4	1-WL-L127-C1E-4"	CHEMICAL CLEANING CONN.	1-WL-L111	M6-WL-00003	M6-WL-00003	Y	ET	1	Liquid	0.95	5.2	39.4	109.0	NNF
1	WL	L	128	ESD0	20	1-WL-L128-ESD0-20"	1-WL-L005	1-WL-L141	M6-WL-00002	M6-WL-00002	N	N	-	Liquid	2.00	5.2	28.6	80.0	BURIED PIPE, NOTE 9
1	WL	L	129	C1E	1	1-WL-L129-C1E-1"	1-WL-L060	VENT TO SAFE LOCATION	M6-WL-00002	M6-WL-00002	Y	ET	1	Liquid	1.99	5.2	28.6	109.0	
1	WL	L	130	C1E	1	1-WL-L130-C1E-1"	1-WL-L088	VENT TO SAFE LOCATION	M6-WL-00002	M6-WL-00002	Y	ET	1	Liquid	1.99	5.2	28.6	109.0	
1	WL	L	131	C1E	1	1-WL-L131-C1E-1"	1-WL-L089	VENT TO SAFE LOCATION	M6-WL-00002	M6-WL-00002	Y	ET	1	Liquid	1.99	5.2	28.6	109.0	
1	WL	L	132	C1E	1	1-WL-L132-C1E-1"	1-WL-L090	VENT TO SAFE LOCATION	M6-WL-00002	M6-WL-00002	Y	ET	1	Liquid	1.99	5.2	28.6	109.0	
1	WL	L	133	C1E	1	1-WL-L133-C1E-1"	1-WL-L058	VENT TO SAFE LOCATION	M6-WL-00002	M6-WL-00002	Y	ET	1	Liquid	1.99	5.2	28.6	80.0	
1	WL	L	134	C1E	1	1-WL-L134-C1E-1"	1-WL-L057	VENT TO SAFE LOCATION	M6-WL-00002	M6-WL-00002	Y	ET	1	Liquid	1.99	5.2	28.6	80.0	
1	WL	L	135	C1E	1	1-WL-L135-C1E-1"	1-WL-L056	VENT TO SAFE LOCATION	M6-WL-00002	M6-WL-00002	Y	ET	1	Liquid	1.99	5.2	28.6	80.0	
1	WL	L	136	C9E	1	1-WL-L136-C9E-1"	1-WL-L107	VENT TO SAFE LOCATION	M6-WL-00003	M6-WL-00003	Y	ET	1	Liquid	1.30	86	39.4	129.0	
1	WL	L	137	C3E	1	1-WL-L137-C3E-1"	1-WL-L106	VENT TO SAFE LOCATION	M6-WL-00003	M6-WL-00003	Y	ET	1	Liquid	1.30	20	39.4	129.0	
1	WL	L	138	C1E	1	1-WL-L138-C1E-1"	1-WL-L105	VENT TO SAFE LOCATION	M6-WL-00003	M6-WL-00003	Y	ET	1	Liquid	1.30	5.2	39.4	129.0	
1	WL	L	139	C1E	1	1-WL-L139-C1E-1"	1-WL-L114	DRAINS	M6-WL-00003	M6-WL-00003	N	N	-			0.1		80.0	NNF
1	WL	L	140	C1E	1	1-WL-L140-C1E-1"	1-WL-L113	DRAINS	M6-WL-00003	M6-WL-00003	N	N	-			0.1		80.0	NNF
1	WL	L	141	C1E	20	1-WL-L141-C1E-20"	1-WL-L128	1-WL-L101, 1-WL-L104, 1-WL-L150, 1-WL-L170, 1-WL-L175	M6-WL-00002	M6-XW-00002	N	N	-	Liquid	2.00	5.2	28.6	80.0	
1	WL	L	150	C1E	10	1-WL-L150-C1E-10"	1-WL-L141, 1-WL-L165	ME-118	M6-WL-00002	M6-QG-00120	N	N	-	Liquid	1.99	5.2	28.6	80.0	
1	WL	L	151	C1E	1	1-WL-L151-C1E-1"	1-WL-L155	VENT TO SAFE LOCATION	M6-WL-00003	M6-WL-00003	Y	ET	1	Liquid	1.30	5.2	39.4	80.0	
1	WL	L	152	C1E	1	1-WL-L152-C1E-1"	1-WL-L155	1-WL-L153	M6-WL-00003	M6-WL-00003	Y	ET	1	Liquid	1.30	5.2	39.4	80.0	PSV INLET
1	WL	L	153	C1E	1	1-WL-L153-C1E-1"	1-WL-L152	DRAINS	M6-WL-00003	M6-WL-00003	N	N	-			0.1		80.0	NNF
1	WL	L	154	C1E	4	1-WL-L154-C1E-4"	CHEMICAL CLEANING CONN.	1-WL-L155	M6-WL-00003	M6-WL-00003	Y	ET	1	Liquid	1.30	5.2	39.4	80.0	NNF
1	WL	L	155	C1E	10	1-WL-L155-C1E-10"	ME-118, 1-WL-L154	1-WL-L163, 1-WL-L151, 1-WL-L152	M6-QG-00120	M6-WL-00003	N	N	-	Liquid	1.30	5.2	39.4	80.0	
1	WL	L	160	C1E	10	1-WL-L160-C1E-10"	1-WL-L105	1-WL-L108	M6-WL-00003	M6-WL-00003	N	N	-	Liquid	1.30	5.2	39.4	80.0	
1	WL	L	161	C1E	10	1-WL-L161-C1E-10"	1-WL-L106	1-WL-L108	M6-WL-00003	M6-WL-00003	N	N	-	Liquid	1.30	5.2	39.4	80.0	
1	WL	L	162	C1E	14	1-WL-L162-C1E-14"	1-WL-L107	1-WL-L108	M6-WL-00003	M6-WL-00003	N	N	-	Liquid	1.30	5.2	39.4	80.0	
1	WL	L	163	C1E	10	1-WL-L163-C1E-10"	1-WL-L155	1-WL-L067	M6-WL-00003	M6-WL-00003	N	N	-	Liquid	1.30	5.2	39.4	80.0	
1	WL	L	165	C1E	4	1-WL-L165-C1E-4"	CHEMICAL CLEANING CONN.	1-WL-L150	M6-WL-00002	M6-WL-00002	Y	ET	1	Liquid	1.99	5.2	28.6	80.0	NNF
1	WL	L	170	C1E	10	1-WL-L170-C1E-10"	1-WL-L141	MINOR CW USERS	M6-WL-00002		N	N	-			5.2		80.0	
1	WL	L	171	C1E	10	1-WL-L171-C1E-10"	MINOR CW USERS	1-WL-L067		M6-WL-00003	N	N	-	Liquid	1.00	5.2	39.4	80.0	
1	WL	L	175	C1E	10	1-WL-L175-C1E-10"	1-WL-L141	1-SC-L070	M6-WL-00002	M6-SC-00001	N	N	-			5.2		80.0	QUENCH LINE, INTERMITTENT
1	WL	L	176	C1E	1	1-WL-L176-C1E-1"	1-WL-L108	1-WL-L177	M6-WL-00003	M6-WL-00003	Y	ET	1	Liquid	1.00	5.2	39.4	80.0	PSV INLET
1	WL	L	177	C1E	1	1-WL-L177-C1E-1"	1-WL-L176	DRAINS	M6-WL-00003	M6-XW-00002	N	N	-			0.1		80.0	DRAIN
1	WL	L	180	C1E	3	1-WL-L180-C1E-3"	1-WL-L170	INTERCOOLER BLOWDOWN COOLER, 1-WL-L185	M6-WL-00002	M6-SC-00001	Y	ET	1	Liquid	2.00	5.2	28.6	80.0	
1	WL	L	181	C1E	3	1-WL-L181-C1E-3"	INTERCOOLER BLOWDOWN COOLER	1-WL-L-171	M6-SC-00001	M6-WL-00003	Y	ET	1	Liquid	1.00	5.2	39.4	80.0	
1	WL	L	185	C1E	1	1-WL-L185-C1E-1"	1-WL-L180	1-WL-L186	M6-WL-00002	M6-WL-00002	Y	ET	1			5.2		80.0	PSV INLET
1	WL	L	186	C1E	1	1-WL-L186-C1E-1"	1-WL-L185	DRAINS	M6-WL-00002	M6-XW-00002	N	N	-			0.1		80.0	NNF
1	WP	L	001	C1E	2	1-WP-L001-C1E-2"	OSBL WATER	1-WP-L017		M6-WP-00010	Y	ET	1	Liquid	3.12	6	20.0	80.0	
1	WP	L	002	S1E	8	1-WP-L002-S1E-8"	MT-104	DRAINS	M6-WP-00010	M6-XW-00002	Y	ET	1			0.1		80.0	NNF
1	WP	L	003	S1E	6	1-WP-L003-S1E-6"	MT-104	MP-119A, 1-WP-L004, 1-WP-L011	M6-WP-00010	M6-WP-00010	Y	ET	1			0.04		80.0	
1	WP	L	004	S1E	6	1-WP-L004-S1E-6"	1-WP-L003	MP-119B, 1-WP-L014	M6-WP-00010	M6-WP-00010	Y	ET	1			0.04		80.0	

Line Designation Table
FEED Study for Carbon Capture Plant Retrofit
Job No.: 26301
Document No.: 26031-000-M0X-0000-00002
Rev. No.: 00

Unit	Bechtel System Code	Comm Group Code	Seq No.	Line Class	Dia (inches)	Line Number	From	To	P&ID From	P&ID To	Insulated (Y/N)	Heat Trace	Insulation Thickness (in)	Phase	Operating Press (Barg)	Design Press (Barg)	Operating Temp (Deg C)	Design Temp (Deg C)	Remarks
1	WP	L	005	S1E	4	1-WP-L005-S1E-4"	MP-119A	1-WP-L008, 1-WP-L009, 1-WP-L010, 1-WP-L020, 1-WP-L012, 1-WP-L018	M6-WP-00010	M6-WP-00010	Y	ET	1	Liquid	3.12	9.1	48.3	80.0	
1	WP	L	006	S1E	4	1-WP-L006-S1E-4"	MP-119B	1-WP-L005, 1-WP-L015	M6-WP-00010	M6-WP-00010	Y	ET	1	Liquid	3.12	9.1	48.3	80.0	
1	WP	L	007	S1E	2	1-WP-L007-S1E-2"	OSBL DEMIN WATER	MT-102	M6-WP-00010	M6-CY-00010	Y	ET	1			0.04		80.0	NNF
1	WP	L	008	S1E	3	1-WP-L008-S1E-3"	1-WP-L005	1-CN-L107	M6-WP-00010	M6-CN-00020	Y	ET	1	Liquid	3.12	9.1	48.3	80.0	
1	WP	L	009	S1E	3	1-WP-L009-S1E-3"	1-WP-L005	T-102	M6-WP-00010		Y	ET	1	Liquid	3.12	9.1	48.3	80.0	
1	WP	L	010	S1E	2	1-WP-L010-S1E-2"	1-WP-L005	1-CN-L414	M6-WP-00010	M6-CN-00080	Y	ET	1	Liquid	3.12	9.1	48.3	80.0	NNF
1	WP	L	011	S1E	1	1-WP-L011-S1E-1"	1-WP-L003, 1-WP-L013, 1-WP-L014	DRAINS	M6-WP-00010	M6-XW-00002	Y	ET	1			0.1		80.0	NNF
1	WP	L	012	S1E	1	1-WP-L012-S1E-1"	1-WP-L005, 1-WP-L015	DRAINS	M6-WP-00010	M6-XW-00001	Y	ET	1			0.1		100.0	NNF
1	WP	L	013	S1E	1	1-WP-L013-S1E-1"	MP-119A	1-WP-L011	M6-WP-00010	M6-WP-00010	Y	ET	1			0.1		80.0	NNF
1	WP	L	014	S1E	1	1-WP-L014-S1E-1"	1-WP-L004	1-WP-L011	M6-WP-00010	M6-WP-00010	Y	ET	1			0.1		80.0	NNF
1	WP	L	015	S1E	1	1-WP-L015-S1E-1"	1-WP-L006	1-WP-L012	M6-WP-00010	M6-WP-00010	Y	ET	1			9.1		80.0	NNF
1	WP	L	016	S1E	1	1-WP-L016-S1E-1"	MP-119B	1-WP-L014	M6-WP-00010	M6-WP-00010	Y	ET	1			0.1		80.0	NNF
1	WP	L	017	S1E	6	1-WP-L017-S1E-6"	1-WP-L001, 1-CN-L238, 1-QG-L678, 1-SC-L072	MT-104	M6-WP-00010	M6-WP-00010	Y	ET	1	Liquid	3.12	6	20.0	80.0	
1	WP	L	018	S1E	3	1-WP-L018-S1E-3"	1-WP-L005, 1-WP-L019	MT-104	M6-WP-00010	M6-WP-00010	Y	ET	1	Liquid	3.12	9.1	48.3	80.0	MIN FLOW
1	WP	L	019	S1E	3	1-WP-L019-S1E-3"	1-WP-L006	1-WP-L018	M6-WP-00010	M6-WP-00010	Y	ET	1	Liquid	3.12	9.1	48.3	80.0	MIN FLOW
1	WP	L	020	S1E	3	1-WP-L020-S1E-3"	1-WP-L005	1-WP-L021, 1-CN-L688	M6-WP-00010	M6-WP-00010	Y	ET	1			9.1		80.0	INTERMITTENT
1	WP	L	025	S1E	4	1-WP-L025-S1E-4"	1-WP-L008	MT-102	M6-WP-00010	M6-CY-00010	Y	ET	1			9.1		80.0	NNF
1	WP	L	030	S1E	4	1-WP-L030-S1E-4"	MT-104	FLUE GAS FOGGER WATER INJECTION SKID	M6-WP-00010	M6-BA-00002	Y	ET	1			0.04		80.0	
1	WP	L	035	S1E	6	1-WP-L035-S1E-6"	MT-104	VENT TO SAFE LOCATION	M6-WP-00010	M6-WP-00010	N	N	-			1		80.0	VENT
1	WP	L	050	S1E	6	1-WP-L050-S1E-6"	OSBL COOLING TOWER BLOWDOWN TANK	MS-209A/B		M6-BA-00002	Y	ET	1	Liquid	3.12	6	20.0	80.0	
1	WP	L	263	S1E	1	1-WP-L263-S1E-1"	1-CN-L339	DRAINS	M6-CN-00030	M6-XW-00001	N	N	-			0.1		80.0	NNF
1	WP	L	678	S1E	2	1-WP-L678-S1E-2"	1-QG-L678	DRAINS	M6-WP-00010	M6-XW-00002	Y	ET	1			0.1		80.0	NNF
1	XW	L	001	C1E	4	1-XW-L001-C1E-4"	AMINE WASTE FROM ABSORBER 1	1-XW-L011		M6-XW-00001	N	N	-			0.1		80.0	BURIED PIPE
1	XW	L	002	C1E	4	1-XW-L002-C1E-4"	AMINE WASTE FROM ABSORBER 1	1-XW-L011		M6-XW-00001	N	N	-			0.1		80.0	BURIED PIPE
1	XW	L	003	C1E	4	1-XW-L003-C1E-4"	AMINE WASTE FROM ABSORBER 1	1-XW-L011		M6-XW-00001	N	N	-			0.1		80.0	BURIED PIPE
1	XW	L	004	C1E	4	1-XW-L004-C1E-4"	AMINE WASTE FROM ABSORBER 2	1-XW-L020		M6-XW-00001	N	N	-			0.1		80.0	BURIED PIPE
1	XW	L	005	C1E	4	1-XW-L005-C1E-4"	AMINE WASTE FROM RECLAIMER	1-XW-L020		M6-XW-00001	N	N	-			0.1		80.0	BURIED PIPE
1	XW	L	006	C1E	4	1-XW-L006-C1E-4"	AMINE WASTE FROM ABSORBER 2	1-XW-L020		M6-XW-00001	N	N	-			0.1		80.0	BURIED PIPE
1	XW	L	007	C1E	4	1-XW-L007-C1E-4"	AMINE WASTE FROM ABSORBER 2	1-XW-L020		M6-XW-00001	N	N	-			0.1		80.0	BURIED PIPE
1	XW	L	008	C1E	4	1-XW-L008-C1E-4"	AMINE WASTE FROM STRIPPER	1-XW-L020		M6-XW-00001	N	N	-			0.1		80.0	BURIED PIPE
1	XW	L	009	C1E	4	1-XW-L009-C1E-4"	AMINE WASTE FROM SOLVENT STORAGE	AMINE WASTE SUMP		M6-XW-00001	N	N	-			0.1		80.0	BURIED PIPE
1	XW	L	010	C1E	4	1-XW-L010-C1E-4"	AMINE WASTE FROM SOLVENT STORAGE	AMINE WASTE SUMP		M6-XW-00001	N	N	-			0.1		80.0	BURIED PIPE
1	XW	L	011	C1E	8	1-XW-L011-C1E-8"	1-XW-L001, 1-XW-L002, 1-XW-L003, 1-XW-L020	AMINE WASTE SUMP	M6-XW-00001	M6-XW-00001	N	N	-			0.1		80.0	BURIED PIPE
1	XW	L	012	C1E	6	1-XW-L012-C1E-6"	1-XW-L016	MT-102	M6-XW-00001	M6-CY-00010	Y	ET	1			0.1		100.0	INTERMITTENT
1	XW	L	013	C1E	6	1-XW-L013-C1E-6"	MP-112B	1-XW-L022	M6-XW-00001	M6-XW-00001	Y	ET	1			4.9		80.0	
1	XW	L	014	C1E	3	1-XW-L014-C1E-3"	1-XW-L022	TRUCK CONNECTION	M6-XW-00001	M6-XW-00001	Y	ET	1			4.9		80.0	NNF
1	XW	L	015	C1E	2	1-XW-L015-C1E-2"	1-XW-L022	AMINE WASTE SUMP	M6-XW-00001	M6-XW-00001	Y	ET	1			4.9		80.0	MIN FLOW
1	XW	L	016	C1E	6	1-XW-L016-C1E-6"	MF-108A, MF-108B	1-XW-L012, 1-XW-L046	M6-XW-00001	M6-XW-00001	Y	ET	1			0.1		80.0	NNF
1	XW	L	017	C1E	1	1-XW-L017-C1E-1"	MF-108A	1-XW-L018	M6-XW-00001	M6-XW-00001	Y	ET	1			0.1		80.0	NNF
1	XW	L	018	C1E	1	1-XW-L018-C1E-1"	MF-108B	AMINE WASTE SUMP	M6-XW-00001	M6-XW-00001	Y	ET	1			4.9		80.0	
1	XW	L	019	C1E	6	1-XW-L019-C1E-6"	AMINE WASTE SUMP	VENT TO SAFE LOCATION	M6-XW-00001	M6-XW-00001	Y	ET	1			1		80.0	
1	XW	L	020	C1E	8	1-XW-L020-C1E-8"	XW-L004, 1-XW-L005, 1-XW-L006, 1-XW-L007, 1-XW-L0	1-XW-L011	M6-XW-00001	M6-XW-00001	N	N	-			0.1		80.0	BURIED PIPE
1	XW	L	022	C1E	6	1-XW-L022-C1E-6"	MP-112A	MF-108A, MF-108B, 1-XW-L014, 1-XW-L015	M6-XW-00001	M6-XW-00001	Y	ET	1			4.9		80.0	
1	XW	L	025	C1E	4	1-XW-L025-C1E-4"	WASTE WATE FROM ABSORBER 1	1-XW-L037	M6-XW-00002	M6-XW-00002	N	N	-			0.1		80.0	BURIED PIPE
1	XW	L	026	C1E	4	1-XW-L026-C1E-4"	WASTE WATE FROM ABSORBER 1	1-XW-L037	M6-XW-00002	M6-XW-00002	N	N	-			0.1		80.0	BURIED PIPE
1	XW	L	027	C1E	4	1-XW-L027-C1E-4"	WASTE WATE FROM ABSORBER 2	1-XW-L038	M6-XW-00002	M6-XW-00002	N	N	-			0.1		80.0	BURIED PIPE
1	XW	L	028	C1E	4	1-XW-L028-C1E-4"	WASTE WATE FROM RECLAIMER	1-XW-L038	M6-XW-00002	M6-XW-00002	N	N	-			0.1		80.0	BURIED PIPE
1	XW	L	029	C1E	4	1-XW-L029-C1E-4"	WASTE WATE FROM ABSORBER 2	1-XW-L038	M6-XW-00002	M6-XW-00002	N	N	-			0.1		80.0	BURIED PIPE
1	XW	L	030	C1E	4	1-XW-L030-C1E-4"	WASTE WATE FROM STRIPPER	1-XW-L038	M6-XW-00002	M6-XW-00002	N	N	-			0.1		80.0	BURIED PIPE
1	XW	L	031	C1E	4	1-XW-L031-C1E-4"	WASTE WATER FROM CO2 COMPR	1-XW-L032	M6-XW-00002	M6-XW-00002	N	N	-			0.1		80.0	BURIED PIPE
1	XW	L	032	C1E	4	1-XW-L032-C1E-4"	WASTE WATER FROM CO2 COMPR	1-XW-L037	M6-XW-00002	M6-XW-00002	N	N	-			0.1		80.0	BURIED PIPE
1	XW	L	033	C1E	4	1-XW-L033-C1E-4"	WASTE WATER FROM CO2 COMPR	1-XW-L034	M6-XW-00002	M6-XW-00002	N	N	-			0.1		80.0	BURIED PIPE
1	XW	L	034	C1E	4	1-XW-L034-C1E-4"	WASTE WATER FROM CO2 COMPR	1-XW-L037	M6-XW-00002	M6-XW-00002	N	N	-			0.1		80.0	BURIED PIPE
1	XW	L	035	C1E	4	1-XW-L035-C1E-4"	WASTE WATER FROM WORKSHOP	1-XW-L036	M6-XW-00002	M6-XW-00002	N	N	-			0.1		80.0	BURIED PIPE
1	XW	L	036	C1E	4	1-XW-L036-C1E-4"	WASTE WATER FROM CONTROL RM/OFFICE	WASTE WATER SUMP	M6-XW-00002	M6-XW-00002	N	N	-			0.1		80.0	BURIED PIPE
1	XW	L	037	C1E	6	1-XW-L037-C1E-6"	XW-L025, 1-XW-L026, 1-XW-L038, 1-XW-L032, 1-XW-L0	WASTE WATER SUMP	M6-XW-00002	M6-XW-00002	N	N	-			0.1		80.0	BURIED PIPE
1	XW	L	038	C1E	6	1-XW-L038-C1E-6"	1-XW-L027, 1-XW-L028, 1-XW-L029, 1-XW-L030	1-XW-L037	M6-XW-00002	M6-XW-00002	N	N	-			0.1		80.0	BURIED PIPE
1	XW	L	039	C1E	3	1-XW-L039-C1E-3"	MP-113A	1-XW-L043, 1-XW-L041, 1-XW-L042	M6-XW-00002	M6-XW-00002	Y	ET	1			4.9		80.0	
1	XW	L	041	C1E	3	1-XW-L041-C1E-3"	1-XW-L039	TRUCK CONNECTION	M6-XW-00002	M6-XW-00002	Y	ET	1			4.9		80.0	NNF

Line Designation Table
FEED Study for Carbon Capture Plant Retrofit
Job No.: 26301
Document No.: 26031-000-M0X-0000-00002
Rev. No.: 00

Unit	Bechtel System Code	Comm Group Code	Seq No.	Line Class	Dia (inches)	Line Number	From	To	P&ID From	P&ID To	Insulated (Y/N)	Heat Trace	Insulation Thickness (in)	Phase	Operating Press (Barg)	Design Press (Barg)	Operating Temp (Deg C)	Design Temp (Deg C)	Remarks
1	XW	L	042	C1E	2	1-XW-L042-C1E-2"	1-XW-L039	WASTE WATER SUMP	M6-XW-00002	M6-XW-00002	Y	ET	1			4.9		80.0	MIN FLOW
1	XW	L	043	C1E	3	1-XW-L043-C1E-3"	1-XW-L039	OIL/WATER INTERCEPTOR	M6-XW-00002	M6-XW-00002	N	N	-			4.9		80.0	BURIED PIPE
1	XW	L	044	FSE	12	1-XW-L044-FSE-12"	OIL/WATER INTERCEPTOR	WASH WATER TO OSBL	M6-XW-00002		N	N	-			0.1		80.0	BURIED PIPE
1	XW	L	045	C1E	6	1-XW-L045-C1E-6"	WASTE WATER SUMP	VENT TO SAFE LOCATION	M6-XW-00002	M6-XW-00002	N	N	-			1		80.0	VENT
1	XW	L	046	C1E	6	1-XW-L046-C1E-6"	1-XW-L016	1-XW-L047	M6-XW-00001	M6-XW-00001	Y	ET	1			4.9		80.0	
1	XW	L	047	C1E	3	1-XW-L047-C1E-3"	1-XW-L046, 1-CY-L755	1-CN-L103	M6-XW-00001	M6-CN-00040	Y	ET	1			0.1		100.0	NNF
1	XW	L	050	ESQ	4	1-XW-L050-ESQ-4"	SANITARY WASTE FROM WORKSHOP/STORES	1-XW-L052	M6-XW-00002	M6-XW-00002	N	N	-			0.1		80.0	BURIED PIPE
1	XW	L	051	ESQ	4	1-XW-L051-ESQ-4"	SANITARY WASTE CLEANOUT	1-XW-L052	M6-XW-00002	M6-XW-00002	N	N	-			0.1		80.0	BURIED PIPE
1	XW	L	052	ESQ	4	1-XW-L052-ESQ-4"	1-XW-L050, 1XW-L051	SANITARY WASTE TO OSBL	M6-XW-00002		N	N	-			0.1		80.0	BURIED PIPE
1	XW	L	055	C1E	3	1-XW-L055-C1E-3"	MP-113B	1-XW-L039	M6-XW-00002	M6-XW-00002	Y	ET	1			4.9		80.0	
1	XW	L	056	C1E	2	1-XW-L056-C1E-2"	1-XW-L057	WASTE SPRAY WATER SUMP	M6-XW-00003	M6-XW-00003	N	N	-			4.9		80.0	MIN FLOW
1	XW	L	057	C1E	3	1-XW-L057-C1E-3"	MP-114A, 1-XW-L058, 1-XW-L059	SPRAY WATER TO COOLDOWN TANK, 1-XW-L056	M6-XW-00003	M6-XW-00003	N	N	-			4.9		80.0	NNF
1	XW	L	058	C1E	3	1-XW-L058-C1E-3"	MP-114B	1-XW-L057	M6-XW-00003	M6-XW-00003	N	N	-			4.9		80.0	
1	XW	L	059	C1E	3	1-XW-L059-C1E-3"	TRUCK CONNECTION	1-XW-L057	M6-XW-00003	M6-XW-00003	N	N	-			4.9		80.0	NNF
1	XW	L	061	C1E	6	1-XW-L061-C1E-6"	WASTE SPRAY WATER SUMP	VENT TO SAFE LOCATION	M6-XW-00003	M6-XW-00003	N	N	-			1		80.0	VENT

Appendix I: Utility Consumption List

Utility Consumption List

FEED STUDY FOR CARBON CAPTURE PLANT RETROFIT

Acknowledgment: This material is based upon work supported by the Department of Energy Award Number DE-FE0031848.
Disclaimer: This report was prepared as an account of work sponsored by an agency of the United States Government. Neither the United States Government nor any agency thereof, nor any of their employees, makes any warranty, express or implied, or assumes any legal liability or responsibility for the accuracy, completeness, or usefulness of any information, apparatus, product, or process disclosed, or represents that its use would not infringe privately owned rights. Reference herein to any specific commercial product, process, or service by trade name, trademark, manufacturer, or otherwise does not necessarily constitute or imply its endorsement, recommendation, or favoring by the United States Government or any agency thereof. The views and opinions of authors expressed herein do not necessarily state or reflect those of the United States Government or any agency thereof.

1	08-Jan-21	ISSUED FOR INFORMATION	MJC	VS	MJC/ADB		
0	10-Jul-20	ISSUED FOR INFORMATION	MJC	DT	MJC/ADB		
Rev.	**Date**	**Reason for Revision**	**BY**	**CHKD**	**APPD**		

Bechtel National, Inc.

Job No. 26301

Document No.	**Rev.**
26301–000–M0X-0000-00003	1

U. S. Department of Energy, Office of Fossil Energy, National Energy Technology Laboratory

Project No. – Originator – Disc Code – Doc Type – Serial No.

NOT USED

Contents

Section **Page**

1. UTILITY CONSUMPTION 3
   1.1. LOW PRESSURE STEAM 4
   1.2. MEDIUM PRESSURE STEAM 4
   1.3. LOW PRESSURE STEAM CONDENSATE 4
   1.4. BOILER FEED WATER 4
   1.5. COOLING WATER 4
   1.6. POTABLE WATER 5
   1.7. COMPRESSED AIR 5
   1.8. NITROGEN GAS 5
   1.9. FIRE WATER 6
   1.10. SOFTENED WATER/DISTILLATE FROM ZLD 6

1. UTILITY CONSUMPTION

The utility requirements for the Sherman Carbon Capture Plant Retrofit are summarized in Table 1. These estimated demands are based on the use of 35% MEA solvent and the Heat and Mass Balances in document 26301-000-M4-CN-00001 and other design factors.

Table 1 - Utility Requirements

COMMODITY	DEMAND	UNITS	COMMENTS
LP Steam	184.6	tonnes/hr	See 1.1
MP Steam	3.0	tonnes/hr	See 1.2 during reclaimer operation
Steam Condensate	217.1 (Return)	tonnes/hr	See 1.3
Boiler Feed Water	32.0	tonnes/hr	See 1.4
Cooling Water	12,012	m^3/hr	See 1.5
Potable Water	26	m^3/hr	See 1.6 Intermittent
Compressed Air			See 1.7
Instrument Air	185	Nm^3/hr	Continuous (400 Nm^3/hr Intermittent)
Plant Air	85	Nm^3/hr	Intermittent (maintenance tools)
Nitrogen Gas	85	Nm^3/hr	See 1.8 Intermittent
Firewater	340	m^3/hr	See 1.9 Intermittent
Softened Water/Distillate from ZLD	69.7	m^3/hr	See 1.10

1.1. LOW PRESSURE STEAM

Low pressure (LP) steam is supplied from the CCPP to an interface at the CCC Plant battery limit (B/L).

The LP steam pressure at Stripper Reboiler ME-110 is required to be 3.13 bara. The LP steam piping that is routed from the interface point contains a desuperheating station to reduce the LP steam temperature to approximately 135°C using 23.5 tonnes/hr of LP boiler feed water into 184.6 tonnes/hr superheated LP steam.

1.2. MEDIUM PRESSURE STEAM

Medium pressure (MP) steam is supplied from the CCPP to an interface at the CCC Plant B/L.

The MP steam conditions at the Reclaimer MS-102 are 7 bara at approximately 165°C (saturated). MP steam is used for amine reclamation at the CCC Plant in the thermal reclaimer. The CCC Plant amine reclamation is a nearly continuous process. An MP steam flow control valve and desuperheating station are provided on the inlet piping to the reclaimer. Steam line drains are provided throughout the system as required and routed to the LP condensate collection system.

1.3. LOW PRESSURE STEAM CONDENSATE

Low pressure steam condensate is produced in the Stripper Reboiler ME-110 and Flash Feed Heater ME-109. Medium pressure condensate is produced in Amine reclaimer MS-102 when amine reclamation process is ongoing. All three streams are combined and transferred to CCPP LP condensate collection system. The minimum LP condensate conditions at the B/L are 0.5 barg at 134.7°C.

In addition, small quantities (about 100 kg/hr) of blowdown from the CO_2 Compressor 1st, 2nd, and 3rd stage Steam Generators ME-112, ME-114 and ME-116 are also routed to the CCPP LP condensate collection system.

1.4. BOILER FEED WATER

Boiler feed water (BFW) is supplied from the CCPP to an interface at the CCC Plant B/L.

The BFW conditions at the B/L are 10 barg at 122°C. BFW is used to feed to CO_2 Compressor 1st, 2nd, and 3rd stage Steam Generators ME-112, ME-114 and ME-116 as well as spray water for the reboiler LP steam desuperheater and reclaimer MP steam desuperheater.

1.5. COOLING WATER

Cooling water is used as the cooling medium for all of the heat exchangers in the CCC Plant via closed cooling water system shared with CCPP.

The cooling water system design is based on a water supply and return temperatures of 28.6°C and 39.4°C, respectively.

The cooling water is supplied to the following users:

- Wash Water Coolers ME-101 and ME-104;
- Lean Amine Cooler ME-102;
- Overhead Stripper Condenser ME-111;
- CO_2 Compressor 1st and 2nd stage Intercoolers ME-113 and ME-115;
- CO_2 Cooler ME-117.
- CO_2 Product Cooler ME-118.
- Rotating Equipment and other minor users (assumed additional 5%)

1.6. POTABLE WATER

The potable water is supplied at an interface at the CCC Plant B/L. The potable water is supplied in accordance with the site potable water quality standard and at 5.0 barg pressure and ambient temperature at the B/L. Potable water is used for sanitary needs, emergency safety showers (ES), utility stations, and raw water (softening) system to meet additional water needs. A hose connection for potable water is provided at each of the utility stations. The total potable water demand is based on the simultaneous use of all sanitary water users, and assuming two ES operating simultaneously. Make-up water to the amine system is supplied separately.

1.7. COMPRESSED AIR

The CCC plant will be self-sufficient for its compressed air needs. The compressed air system (PA) will supply instrument air (IA) and service air (SA) at 7 barg pressure for all consumers within the CCC plant.

The continuous IA requirement is based on the modulating control valves in service and the on/off valves not stroking. For the intermittent IA demand, the flow rate is based on typical sizing flow rate assuming time averaged stroking activity for the control valves, including dryer purge air, plus a 10% allowance. For plant air, the demand is based on an estimate of using a few pneumatic tools during maintenance.

1.8. NITROGEN GAS

The CCC Plant will be self-sufficient for its nitrogen gas needs with gas bottles. The nitrogen will be used for system and equipment lay-up as needed. The Rich Amine Storage Tank (MT-101) and the Lean Amine Solvent Storage Tank (MT-102) will have nitrogen blanketing. A nitrogen connection is provided in each of the utility stations located in the CCC Plant. The nitrogen gas system supply header pressure to the utility stations is maintained at approximately 5 barg. The nitrogen gas system supply header pressure to the storage tanks is controlled to approximately 2 barg. Reserve nitrogen cylinders are located in the CCC Plant.

1.9. FIRE WATER

The fire water is supplied from CCPP at two separate interfaces at the CCC Plant B/L. The fire water will be supplied at 11.7 barg and at ambient temperature. The system will supply the design maximum water demand for any automatic suppression system plus 114 m^3/hr of flow for fire hydrants based on the National Fire Protection Association (NFPA) requirements. The only automatic suppression system is the wet pipe sprinkler system covering the CO_2 Compressor area.

1.10. SOFTENED WATER/DISTILLATE FROM ZLD

Softened water/Distillate is required to dilute MEA for the amine system and provide additional makeup water to the amine system, as needed, if the system is slightly out of water balance. The water is supplied at 5.0 barg pressure and less than 50 °C temperature at the B/L.

Appendix J: Mechanical Equipment List

BECHTEL NATIONAL Inc.

FEED STUDY FOR CARBON CAPTURE PLANT RETROFIT

MECHANICAL EQUIPMENT LIST

Acknowledgment: This material is based upon work supported by the Department of Energy Award Number DE-FE0031848.

Disclaimer: This report was prepared as an account of work sponsored by an agency of the United States Government. Neither the United States Government nor any agency thereof, nor any of their employees, makes any warranty, express or implied, or assumes any legal liability or responsibility for the accuracy, completeness, or usefulness of any information, apparatus, product, or process disclosed, or represents that its use would not infringe privately owned rights. Reference herein to any specific commercial product, process, or service by trade name, trademark, manufacturer, or otherwise does not necessarily constitute or imply its endorsement, recommendation, or favoring by the United States Government or any agency thereof. The views and opinions of authors expressed herein do not necessarily state or reflect those of the United States Government or any agency thereof.

											Document Number		
											BECHTEL: 26301-000-M0X-0000-00001 **OWNER : NOT USED**		
											Rev	**Job Number**	**Page**
		00	Aug-14-2020	ISSUED FOR INFORMATION	MDP	MJC	MJC/ADB						
		Rev	**Date**	**Description**	**BY**	**CHKD**	**APPD**				**00**	**26301**	**1** of **6**

1.) This mechanical equipment list provides preliminary data, scope and quantities that may be subject to change during the final engineering design.

2.) The number of heat exchanger units/shells to be confirmed by the vendor during detailed engineering phase.

3.) HVAC requirements to be confirmed in detailed engineering.

4.) Flows shown are at rated conditions, including a design margin.

5.) For items with an equipment tag the quantity shown is the equipment count, with all other items showing the quantity required for the project

MECHANICAL EQUIPMENT LIST

FEED STUDY FOR CARBON CAPTURE PLANT RETROFIT

JOB NO: 26301
DOCUMENT NUMBER: 26301-000-M0X-0000-00001
REV NO: 00

Equipment Count/Project Qty	System Code	Bechtel Tag No.	Item Description	Capacity Per Component	Type	P&ID	Nominal or Rated	Units	Rated Diff. Pressure bar	Motor (Rated) kW	I.D./W m	H/T-T m	Surf Area m^2	Design Press (Hot Side) bar g	Desgin Temp (Hot Side) °C	Design Press (Cold Side) bar g	Desgin Temp (Cold Side) °C	Metallurgy / Remarks
1	BA	MA-101	Flue Gas Blower (Absorber 1)	1x100% per Train (50% per Unit)	Horizontal Centrifugal	M6-BA-00001	1.13E+06	Nm^3/h	0.14	5,296				0.13	100.0			Stainless Steel Housing and Internals. Including 2x100% lube oil pumps.
1	BA	MA-102	Flue Gas Blower (Absorber 2)	1x100% per Train (50% per Unit)	Horizontal Centrifugal	M6-BA-00001	1.13E+06	Nm^3/h	0.14	5,296				0.13	100.0			Stainless Steel Housing and Internals. Including 2x100% lube oil pumps.
2	PA	MC-101A/B	Instrument/Service Air Compressor	2x100%	Horizontal Rotary Screw, Air-Cooled, Acoustical Enclosure	M6-PA-00001	500	Nm^3/h							80.0			Carbon Steel, Capacity based on intermittent demand rates for instrument & plant air
1	QG	MC-103	CO_2 Compressor	1x100%	Centrifugal; 3 Stage	M6-QG-00020 [Stage 1] M6-QG-00050 [Stage 2] M6-QG-00090 [Stage 3]	76,537 [Stage 1] 73,053 [Stage 2] 72,237 [Stage 3]	Nm^3/h	5.48 [Stage 1] 18.44 [Stage 2] 61.15 [Stage 3]	4,836 [Stage 1] 4,847 [Stage 2] 4,334 [Stage 3]				6.7 [Stage 1] 25.9 [Stage 2] 111.7 [Stage 3]	205.0			Including 2x100% lube oil pumps.
1	CN	ME-101	Wash Water Cooler (Absorber 1)	1x100% per Train	Plate and Frame	M6-CN-00030	25.6	MW						9.1	100.0	8.5	80.0	Titanium or Alternative.
1	CN	ME-102	Lean Amine Cooler	1x100%	Welded Plate and Frame	M6-CN-00080	14.3	MW						17.7	120.0	8.5	120.0	Titanium or Alternative.
2	CN	ME-103 A/B	Semi-Lean/Rich Amine Heat Exchanger	2x50%	Welded Plate and Frame	M6-CN-00085	29.6	MW						11.0	142.0	20.8	140.0	Stainless steel.
1	CN	ME-104	Wash Water Cooler (Absorber 2)	1x100% per Train	Plate and Frame	-	25.6	MW						9.1	100.0	8.5	80.0	Titanium or Alternative.
1	CN	ME-107	Flash Feed Heat Exchanger	1x100%	Welded Plate and Frame	M6-CN-00100	2.1	MW						17.7	160.0	20.8	142.0	Stainless steel.
8	CN	ME-108 A-H	Lean/Rich Amine Heat Exchanger	8x12.5%	Welded Plate and Frame	M6-CN-00081	142.7	MW						17.7	160.0	20.8	160.0	Stainless steel.
1	CN	ME-109	Flash Feed Heater	1x100%	Welded Plate and Frame	M6-CN-00100	5.2	MW						10.0	150.0	20.8	150.0	Stainless steel.
8	CN	ME-110A-H	Stripper Reboiler	8x12.5%	Welded Plate and Frame	M6-CN-00150	125.5	MW						5.0	270.0	4.0	270.0	Stainless steel.
4	CN	ME-111A-D	Overhead Stripper Condenser	4x25%	Plate and Frame	M6-CN-00130	57.9	MW						3.5	135.0	8.5	105.0	Titanium or Alternative.
1	QG	ME-112	CO_2 Compressor 1st Stage Steam Generator	1x100%	Shell & Tube	M6-QG-00030	1.73	MW						6.7	205.0	6.7	177.0	CO2 Side - Stainless steel tubes; Steam/Cond Side - CS Shell
1	QG	ME-113	CO_2 Compressor 1st Stage Intercooler	1x100%	Shell & Tube	M6-QG-00030	4.84	MW						6.7	177.0	5.2	129.0	CO2 Side - 304L Stainless steel shell; Cooling Water Side - Titanium Tubes
1	QG	ME-114	CO_2 Compressor 2nd Stage Steam Generator	1x100%	Shell & Tube	M6-QG-00060	1.73	MW						25.9	205.0	20.0	177.0	CO2 Side - Stainless steel tubes; Steam/Cond Side - CS Shell
1	QG	ME-115	CO_2 Compressor 2nd Stage Intercooler	1x100%	Shell & Tube	M6-QG-00060	3.52	MW						25.9	177.0	20.0	129.0	CO2 Side - 304L Stainless steel shell; Cooling Water Side - Titanium Tubes
1	QG	ME-116	CO_2 Compressor 3rd Stage Steam Generator	1x100%	Shell & Tube	M6-QG-00100	2.02	MW						111.7	205.0	86.0	177.0	CO2 Side - Stainless steel tubes; Steam/Cond Side - CS Shell
1	QG	ME-117	CO_2 Cooler	1x100%	Shell & Tube	M6-QG-00100	6.02	MW						111.7	177.0	86.0	129.0	CO2 Side - 304L Stainless steel shell; Cooling Water Side - Titanium Tubes
1	QG	ME-118	CO_2 Product Cooler	1x100%	Welded Plate and Frame	M6-QG-00120	4.23	MW						244.7	106.0	8.5	80.0	Titanium or Alternative.
1	CN	MF-102	Rich Amine Mechanical Filter	2x100%	Cartridge	M6-CN-00040	2439.6	m^3/h	0.50					20.8	100.0			10 micron absolute filter. Stainless steel housing & Polypropylene cartridge. Multiple Cartridge housing required. Spare housing to be provided for cartridge change-out
2	CN	MF-105A/B	Lean Amine Mechanical Filter	2x100%	Cartridge	M6-CN-00170	1918.3	m^3/h	0.50					17.7	160.0			10 micron absolute filter - Sintered metal fibre (stainless steel) element.
2	XW	MF-108A/B	Amine Return Filter	2x100%	Cartridge	M6-XW-00001	61.6	m^3/h	0.50					4.9	80.0			10 micron absolute filter. Stainless steel housing & Polypropylene cartridge.
1	AN	MG-101	Standby Diesel Generator	1x 100%	Diesel Driven	N/A	600	kW										Diesel Storage Tank integral with generator.
2	CN	MP-101A/B	Rich Amine Pump (Absorber 1)	2x100% per Absorber	Horizontal Centrifugal	M6-CN-00040	1342	m^3/h	15.78	764				20.4	100.0			API 610 design. Stainless Steel. Maximum Design Pressure based on maximum shutoff pressure.

MECHANICAL EQUIPMENT LIST

FEED STUDY FOR CARBON CAPTURE PLANT RETROFIT

JOB NO: 26301
DOCUMENT NUMBER: 26301-000-M0X-0000-00001
REV NO: 00

Equipment Count/Project Qty	System Code	Bechtel Tag No.	Item Description	Capacity Per Component	Type	P&ID	Nominal or Rated	Units	Rated Diff. Pressure bar	Motor (Rated) kW	I.D./W m	H/T-T m	Surf Area m^2	Design Press (Hot Side) bar g	Desgin Temp (Hot Side) °C	Design Press (Cold Side) bar g	Desgin Temp (Cold Side) °C	Metallurgy / Remarks
2	CN	MP-102A/B	Wash Water Recirculation Pump (Absorber 1)	2x100%	Horizontal Centrifugal	M6-CN-00030	1561	m^3/h	4.21	236				9.1	80.0			Constant speed motor. Stainless steel. ANSI design. Maximum Design Pressure based on maximum shutoff pressure.
2	CN	MP-104A/B	Wash Water Recirculation Pump (Absorber 2)	2x100%	Horizontal Centrifugal	-	1561	m^3/h	4.21	236				9.1	80.0			Constant speed motor. Stainless steel. ANSI design. Maximum Design Pressure based on maximum shutoff pressure.
2	CN	MP-105A/B	Lean Amine Pump	2x100%	Horizontal Centrifugal	M6-CN-00170	2110	m^3/h	8.64	648				15.6	160.0			API 610 design. Stainless Steel. Maximum Design Pressure based on maximum shutoff pressure.
2	CN	MP-106A/B	Flash Drum Pump	2x100%	Horizontal Centrifugal	M6-CN-00110	540	m^3/h	4.77	97				10.8	145.0			API 610 design. Stainless Steel. Maximum Design Pressure based on maximum shutoff pressure.
2	CN	MP-107A/B	Reflux Pump	2x100%	Horizontal Centrifugal	M6-CN-00140	99	m^3/h	5.52	23				11.2	105.0			Constant speed motor. Stainless steel. ANSI design. Maximum Design Pressure based on maximum shutoff pressure.
2	QG	MP-108A/B	CO_2 Product Sendout Pump	2x100%	Horizontal Centrifugal	M6-QG-00110	405	m^3/h	79.17	1219				210.8	106.0			API 610 design. Stainless Steel. Maximum Design Pressure based on maximum shutoff pressure.
2	BA	MP-109A/B	Flue Gas Trim Foggers Water Supply Pump	2x100%	Horizontal Centrifugal	M6-BA-00002	16	m^3/h	34.50	15.9				39.0	80.0			Capacity includes an assumed constant recirc flow. Constant speed motor. Stainless steel. ANSI design. Maximum Design Pressure based on maximum shutoff pressure.
2	CY	MP-111A/B	Lean Amine Solvent Fill Pump	2x100%	Horizontal Centrifugal	M6-CY-00010	70	m^3/h	8.28	25				12.0	80.0			Stainless steel. API 610 design. Maximum Design Pressure based on maximum shutoff pressure.
2	XW	MP-112A/B	Amine Waste Sump Pump	2x100%	Vertical Centrifugal	M6-XW-00001	61.6	m^3/h	3.46	9.4				4.9	80.0			Constant speed motor. Stainless steel. API 610 design. Located in concrete sump. Maximum Design Pressure based on maximum shutoff pressure.
2	XW	MP-113A/B	Wastewater Forwarding Pump	2x100%	Vertical Centrifugal	M6-XW-00002	61.6	m^3/h	3.46	9.4				4.9	80.0			Constant speed motor. Stainless steel. ANSI design. Located in concrete sump.
2	XW	MP-114A/B	Waste Spray Water Forwarding Pump	2x100%	Vertical Centrifugal	M6-XW-00003	61.6	m^3/h	3.46	9.4				4.9	80.0			Constant speed motor. Stainless steel. ANSI design. Located in concrete sump. Maximum Design Pressure based on maximum shutoff pressure.
2	WP	MP-119A/B	Absorber Makeup Water Pump	2x100%	Horizontal Centrifugal	M6-WP-00010	84.6	m^3/h	6.70	24				9.1	80.0			Common pumps feed both absorbers. Constant speed motor. SS impeller. ANSI design. Maximum Design Pressure based on maximum shutoff pressure.
2	CN	MP-124A/B	Rich Amine Pump (Absorber 2)	2x100%	Horizontal Centrifugal	-	1342	m3/h	15.78	764				20.4	100.0			API 610 design. Stainless Steel. Maximum Design Pressure based on maximum shutoff pressure.
2	BA	MP-209A/B	Flue Gas Primary Foggers Water Supply Pump	2x100%	Horizontal Centrifugal	M6-BA-00002	82.8	m^3/h	34.50	2.5				39.0	80.0			Constant speed motor. Stainless steel. ANSI design. Maximum Design Pressure based on maximum shutoff pressure.
2	CN	T-101/102	CO_2 Absorber	2x50%	Vertical Column	M6-CN-00010 [Absorber 1] - [Absorber 2]					11.8	44.3		0.10	100.0			Stainless steel, Height shown excludes stack and stack cone. ASTM flanged and dished bottom head to be used on absorber.
1	CN	T-103	Stripper	1x100%	Vertical Column	M6-CN-00120 [Btm] M6-CN-00130 [Top]					6.7	43.6		3.45	160.0			Stainless steel
1	CY	MT-101	Rich Amine Storage Tank	1x100%	Vertical	M6-CY-00010	1,395	m^3			12.0	14.4		0.04	80.0			Stainless Steel w/ Internal Electric Heater. Volume shown is Working Volume
1	CY	MT-102	Lean Amine Solvent Storage Tank	1x100%	Vertical	M6-CY-00010	1,395	m^3			12.0	14.4		0.04	80.0			Stainless Steel w/ Internal Electric Heater Volume shown is Working Volume
0	XW	MT-103	Amine Waste Sump	1x100%	Sump	M6-XW-00001	564	m^3				5.0		0.04	80.0			Concrete Sump (8.5m x 17m x 5m) Volume shown is Working Volume

MECHANICAL EQUIPMENT LIST

FEED STUDY FOR CARBON CAPTURE PLANT RETROFIT

JOB NO: 26301
DOCUMENT NUMBER: 26301-000-M0X-0000-00001
REV NO: 00

Equipment Count/Project Qty	System Code	Bechtel Tag No.	Item Description	Capacity Per Component	Type	P&ID	Nominal or Rated	Units	Rated Diff. Pressure bar	Motor (Rated) kW	I.D./W m	H/T-T m	Surf Area m^2	Design Press (Hot Side) bar g	Desgin Temp (Hot Side) °C	Design Press (Cold Side) bar g	Desgin Temp (Cold Side) °C	Metallurgy / Remarks
1	WP	MT-104	Process Water Surge Tank	1x100%	Vertical	M6-WP-00010	104	m^3			4.7	7.3		0.04	80.0			Fibre Reinforced Plastic - Fixed Roof Tank. Volume shown is Working Volume
0	CN	MT-105	Caustic Soda Storage Tank	1x100%	Vertical	M6-CN-00180	10	m^3			2.4	3.1		0.04	80.0			Part of Reclaimer Chemical Feed Package MS-103 - Carbon Steel/Rubber Lined Carbon Steel w/ Internal Electric Heater - Fixed Roof Tank Volume shown is Working Volume
1	PA	MT-109	Air Receiver	1x100%	Vertical, ASME VIII	M6-PA-00001	22	m^3							80.0			Carbon steel - Vendor Scope. Dimensions by Vendor - to be sized for 30mins continuous IA demand. Design pressure defined by IA Compressor shutoff pressure - by IA Compressor vendor
1	CN	MV-201	Semi-Lean Amine Flash Drum	1x100%	Vertical, ASME VIII	M6-CN-00110					3.1	9.1		4.0	145.0			Stainless steel ASME VIII
1	CN	MV-202	Stripper Reflux Drum	1x100%	Vertical	M6-CN-00140					3.7	5.5		3.45	105.0			Stainless steel ASME VIII
1	QG	MV-203	CO_2 Compressor Suction Drum	1x100%	Vertical	M6-QG-00010					4.0	6.0		3.45	105.0			Stainless steel ASME VIII
1	QG	MV-104	CO_2 Compressor 1st Stage Interstage Knock-Out Drum	1x100%	Vertical	M6-QG-00040					2.7	4.1		6.7	177.0			Stainless steel ASME VIII
1	QG	MV-105	CO_2 Compressor 2nd Stage Interstage Knock-Out Drum	1x100%	Vertical	M6-QG-00070					1.8	2.7		25.9	177.0			Stainless steel ASME VIII
1	QG	MV-106	CO_2 Surge Drum	1x100%	Vertical	M6-QG-00110					3.2	6.4		111.7	177.0			Stainless steel ASME VIII
3	BA	MS-101A-C	Flue Gas Water Fogger System	1x100%		M6-BA-00001	2.70E+6 [MS-101A] 1.17E+6 [MS-101B/C]	m^3/h										Package includes: 3 foggers - 1 on the common duct line (MS-101A) and 1 each on the individual blower discharge line to the absorbers - MS-101B/C Wet Ducting, Collection and Drain. Space to be provided for installation of future demister.
1	CN	MS-102	Amine Reclaimer	1x100%		M6-CN-00180	3.21	m^3/h										Package includes Vessel, pump(s) and shell & tube exchanger. Vessel includes LP steam sparger.
1	CN	MS-103	Reclaimer Chemical Feed Package	1x100%		M6-CN-00190												50%wt caustic soda solution to be used in chemical feed package. MT-105 is part of this package
1	QG	MS-104	CO_2 Drying Package	1x100%	Regenerative, Closed Loop blower type	M6-QG-00080	76,613.90	Sm^3/h	1.00									304 SS Piping, Valves and Vessels
2	PA	MS-105A/B	Instrument Air Dryer	2x100%	Desiccant; Dual Columns Nonrefrigerent with Prefilters After Filters	M6-PA-00001	420	Sm^3/h										Carbon Steel
1	PG	MS-106	Nitrogen Gas Supply Package	1x100%	Nitrogen Cylinder package (Cylinders by Owner) incl. regulating valves	M6-PG-00001	85	Nm^3/h										Carbon Steel
1	CN	MS-107	Antifoam Injection Skid	1x100%		M6-CN-00080												
8	PW		Emergency Shower	1x100%	Heated	M6-PW-00001												Connected to potable water distribution
1	BA		Flue Gas Duct Isolation Damper (Absorber 1) - MD-034	1x100%	Motor Actuated Guillotine Type. Size: 6.2m x 3.1m	M6-BA-00001												Damper and housing material is stainless steel.
1	BA		Flue Gas Duct Isolation Damper (Absorber 2) - MD-060	1x100%	Motor Actuated Guillotine Type. Size: 6.2m x 3.1m	M6-BA-00001												Damper and housing material is stainless steel.
8	PF		Fire Hydrants and Hose Houses			M6-PF-00001												
10	PF		Fire Extinguishers	1x100%	Handheld (ABC Dry Powder)	N/A												Quantity as required.

MECHANICAL EQUIPMENT LIST

FEED STUDY FOR CARBON CAPTURE PLANT RETROFIT

JOB NO: 26301
DOCUMENT NUMBER: 26301-000-M0X-0000-00001
REV NO: 00

Equipment Count/Project Qty	System Code	Bechtel Tag No.	Item Description	Capacity Per Component	Type	P&ID	Nominal or Rated	Units	Rated Diff. Pressure bar	Motor (Rated) kW	I.D./W m	H/T-T m	Surf Area m^2	Design Press (Hot Side) bar g	Desgin Temp (Hot Side) °C	Design Press (Cold Side) bar g	Desgin Temp (Cold Side) °C	Metallurgy / Remarks
1	PF		Fire Extinguishers	1x100%	Wheeled (ABC Dry Powder)	N/A												Quantity as required.
10	PF		Fire Extinguishers	1x100%	Handheld (CO2)	N/A												Quantity as required.
9	PW		Emergency Eyewash	1x100%	Heated	M6-PW-00001												Uses bottled water
1	PF		Wet Pipe Sprinkler System - CO_2 Compressor Area	1x100%	Automatic	M6-PF-00001												
1	PF		Fire and Gas Detection System	1x100%		N/A												
2	VB		Control & Admin Bldg HVAC Units	2x100%	32 Tons	N/A	110	kW										Details to be confirmed during detailed engineering
1	VB		Laboratory Bldg HVAC Units	2x100%	32 Tons	N/A	110	kW										Details to be confirmed during detailed engineering
5	VB		CO_2 Compressor Bldg Ventilation Fans (Compressor Area)	5x25%	26,000m3/h	N/A	3.5	kW										Details to be confirmed during detailed engineering
2	VB		CO_2 Compressor Bldg Ventilation Fans (VFD Area)	2x100%	24,500m3/h	N/A	2.2	kW										Details to be confirmed during detailed engineering
2	VB		CO_2 Compressor Bldg Ventilation Fans (Water Treatment Area)	2x100%	10,000m3/h	N/A	1.1	kW										Details to be confirmed during detailed engineering
8	VB		CO_2 Compressor Bldg Electric Unit Heaters (Compressor Area)	8x14.5%		N/A	15	kW										Details to be confirmed during detailed engineering
2	VB		CO_2 Compressor Bldg Electric Unit Heaters (VFD Area)	2x50%		N/A	15	kW										Details to be confirmed during detailed engineering
1	VB		CO_2 Compressor Bldg Electric Unit Heaters (Water Treatment Area)	1x100%		N/A	15	kW										Details to be confirmed during detailed engineering
3	VB		Blower Bldg Ventilation Fans (Absorber 1)	3x33%	22,000m3/h	N/A	2.2	kW										Requirement for building to be confirmed. Details to be confirmed during detailed engineering
4	VB		Blower Bldg ElectricUnit Heaters (Absorber 1)	4x25%		N/A	15	kW										Requirement for building to be confirmed. Details to be confirmed during detailed engineering
3	VB		Blower Bldg Ventilation Fans (Absorber 2)	3x33%	22,000m3/h	N/A	2.2	kW										Requirement for building to be confirmed. Details to be confirmed during detailed engineering
4	VB		Blower Bldg ElectricUnit Heaters (Absorber 2)	4x25%		N/A	15	kW										Requirement for building to be confirmed. Details to be confirmed during detailed engineering
1	VB		Lube Oil Storage Bldg Ventilation Fan	1x100%	1,500m3/h	N/A	0.2	kW										Details to be confirmed during detailed engineering
1	VB		Lube Oil Storage Bldg Electric Unit Heater	1x100%		N/A	1	kW										Details to be confirmed during detailed engineering
2	VB		CO_2 Compressor Bldg HVAC Units (Analyser Room)	2x100%	1.5 Tons	N/A	5	kW										Details to be confirmed during detailed engineering
2	VB		Electrical Bldg HVAC Units	2x100%	25 Tons	N/A	80	kW										Details to be confirmed during detailed engineering
2	VB		Battery Room Exhaust Fans	2x100%	Explosion Proof	N/A	0.2	kW										Details to be confirmed during detailed engineering
2	VB		CGMS Shelter HVAC Units	2x100%	1 Ton	N/A	3	kW										Details to be confirmed during detailed engineering

Appendix K: Single Line Diagrams

Main Single Line Diagram

- 26301-000-E1-0000-00001

DC and UPS Single Line Diagram

- 26301-000-E1-0000-00002 Rev. 1

138 kV Single Line Diagram

- 26301-000-E1-0000-00003

Acknowledgment: This material is based upon work supported by the Department of Energy Award Number DE-FE0031848.
Disclaimer: This report was prepared as an account of work sponsored by an agency of the United States Government. Neither the United States Government nor any agency thereof, nor any of their employees, makes any warranty, express or implied, or assumes any legal liability or responsibility for the accuracy, completeness, or usefulness of any information, apparatus, product, or process disclosed, or represents that its use would not infringe privately owned rights. Reference herein to any specific commercial product, process, or service by trade name, trademark, manufacturer, or otherwise does not necessarily constitute or imply its endorsement, recommendation, or favoring by the United States Government or any agency thereof. The views and opinions of authors expressed herein do not necessarily state or reflect those of the United States Government or any agency thereof.

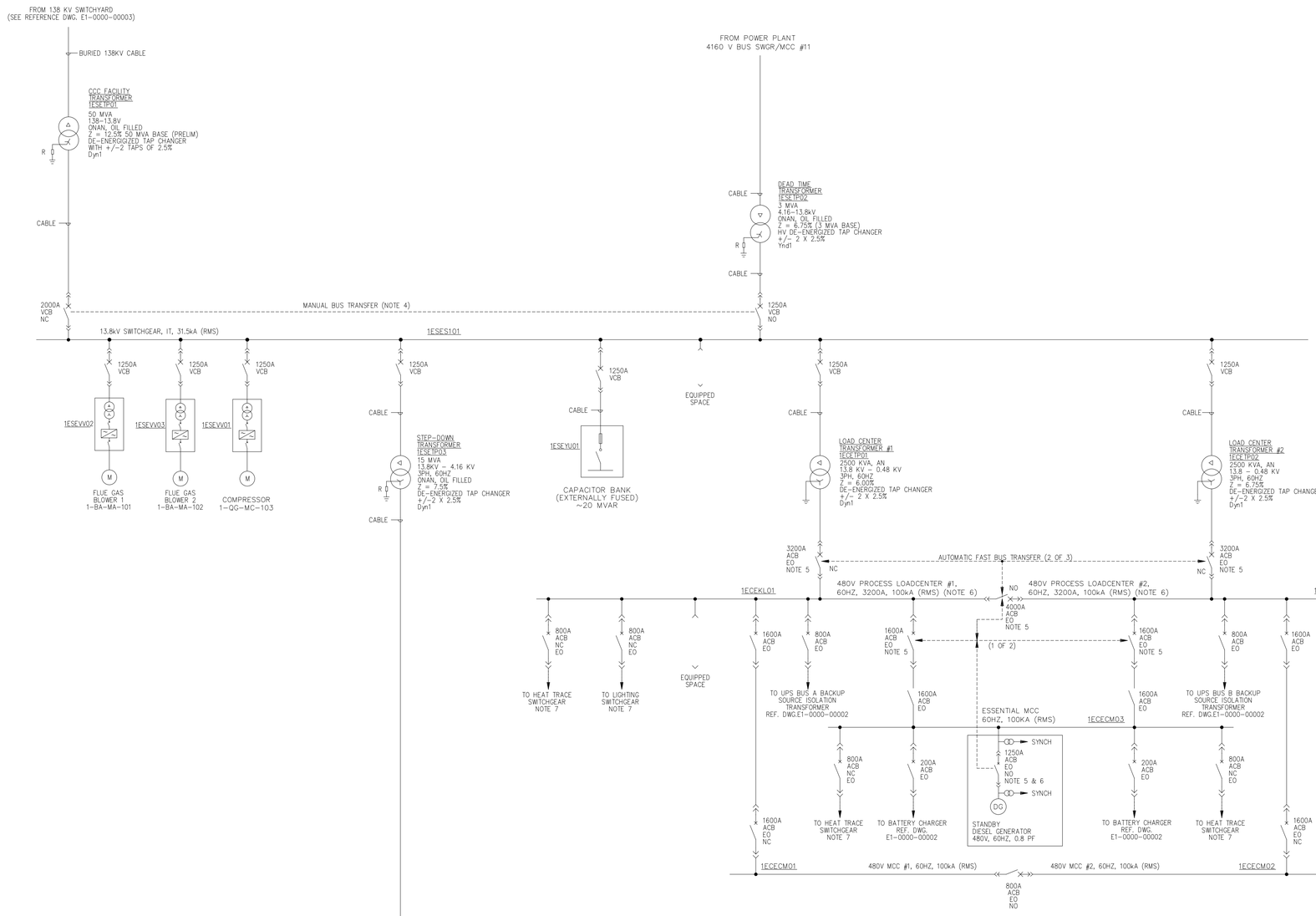

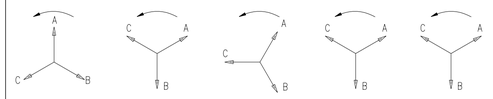

SYSTEM PHASE ROTATION
(SEE NOTE 2)

NOTES:

1. EQUIPMENT SIZES AND RATINGS ARE PRELIMINARY.
2. PHASE ROTATION TO BE CONFIRMED. SYSTEM FREQUENCY IS 60HZ.
3. MV SWITCHGEAR SHALL BE ANSI/IEEE C37.20.2 ARC-RESISTANT, ACCESSIBILITY TYPE 2.
4. MANUALLY INITIATED MAKE BEFORE BREAK LOAD LIMITED TRANSFER.
5. INTERLOCKS SHALL BE PROVIDED TO PREVENT PARALLELLING OF SOURCES.
6. LOSS OF VOLTAGE ON BOTH BUSSES SIGNALS AN EMERGENCY CONDITION, OPENS BOTH INCOMING BREAKERS, CLOSES TIE BREAKER, AND STARTS DIESEL GENERATOR.
7. LIGHTING AND HEAT TRACING MAIN SWITCHGEAR WILL BE TWO HALF BUS BARS ARRANGEMENTS WITH A NORMALLY OPEN COUPLER.
8. BUILDING HVAC, VENTILATION FANS, AIR COMPRESSORS, RECLAIMER, ANTI-FOAM INJECTION, CO2 DRYING PACKAGE, AND FLASH DRUM PUMPS GET POWER FROM 480V AND ARE NOT SHOWN.

REFERENCE DRAWINGS:

1. E1-0000-00003 138KV SINGLE LINE DIAGRAM
2. E1-0000-00002 DC/UPS SINGLE LINE DIAGRAM

LEGEND

POWER FACTOR CORRECTION CAPACITOR BANK

VARIABLE FREQUENCY DRIVE

ATS	AUTOMATIC TRANSFER SWITCH
ACB	AIR CIRCUIT BREAKER
VCB	VACUM CIRCUIT BREAKER
EO	ELECTRIVALLY OPERATED
NC	NORMALLY CLOSED
NO	NORMALLY OPEN
OLTC	ON-LOAD TAP CHANGER
RMS	ROOT MEAN SQUARED
SA	SURGE ARRESTOR

WITHDRAWABLE OR PLUG-IN CIRCUIT BREAKER

POTENTIAL TRANSFORMER

SURGE ARRESTOR

NO.	DATE	REVISIONS	BY	CHK	APPR
000	10/30/20	ISSUED FOR INFORMATION			

Owner
U. S. DEPARTMENT OF ENERGY, OFFICE OF FOSSIL ENERGY, NATIONAL ENERGY TECHNOLOGY LABORATORY

FEED STUDY FOR CARBON CAPTURE PLANT RETROFIT

Contractor
BECHTEL NATIONAL, INC.

MAIN SINGLE LINE DIAGRAM

Sheet Size	Scale	
594 X 841 "A1"	N.T.S	
JOB NO.	DRAWING NO.	REV.
26301	000-E1-0000-00001	000

Acknowledgment: This material is based upon work supported by the Department of Energy Award Number DE-FE0031848.
Disclaimer: This report was prepared as an account of work sponsored by an agency of the United States Government. Neither the United States Government nor any agency thereof, nor any of their employees, makes any warranty, express or implied, or assumes any legal liability or responsibility for the accuracy, completeness, or usefulness of any information, apparatus, product, or process disclosed, or represents that its use would not infringe privately owned rights. Reference herein to any specific commercial product, process, or service by trade name, trademark, manufacturer, or otherwise does not necessarily constitute or imply its endorsement, recommendation, or favoring by the United States Government or any agency thereof. The views and opinions of authors expressed herein do not necessarily state or reflect those of the United States Government or any agency thereof.

480V, 3PHASE, 3 WIRE, 60HZ. SUPPLY-1
(FROM ESSENTIAL SWITCHGEAR)
SEE DRAWING E1-0000-00001

BATTERY CHARGER-A
125V DC,800A

1EDEDC01

3P MCCB

27

RECTIFIER

V

27

59

A

2P MCCB NOTE 3 & 6

1EDEDB01
125V LEAD ACID BATTERY
1200AH

LBD

CABLE NOTE 10

125V DC SWITCHBOARD

2P MCCB NOTE 3 & 6

LBD

SHUNT

A

BUS-A, RATING 125V DC, 35KA

64

NOTE 13

2P MCCB NOTE 6

SPARE

480V, 3PHASE, 3 WIRE, 60HZ. SUPPLY-2
(FROM ESSENTIAL SWITCHGEAR)
SEE DRAWING E1-0000-00001

BATTERY CHARGER-B
125V DC,800A

1EDEDC02

3P MCCB

27

RECTIFIER

V

27

59

A

2P MCCB NOTE 3 & 6

1EDEDB02
125V LEAD ACID BATTERY
1200AH

LBD

CABLE NOTE 10

125V DC SWITCHBOARD
1EDEAD01

2P MCCB NOTE 3 & 6

LBD

SHUNT

A

N.O.
NOTE 14

BUS-B, RATING 125V DC, 35KA

64

NOTE 13

2P MCCB NOTE 6

2P MCCB NOTE 3 & 6

SPARE

2P MCCB NOTE 3 & 6

1EDEAD02

N.C. 2P MCB

N.O. 2P MCB NOTE 14

2 MCB

125V DC PANELBOARD
NOTE 15

3PHASE, 3 WIRE, 60HZ.
FROM LOAD CENTER 2
SEE REF DRAWING E1-0000-00001

3P MCCB

ISOLATION TRANSFORMER, THREE PHASE 208/120V AC, 60HZ 60KVA

1

INVERTER

2P MCCB

SWITCH

STATIC SWITCH

4P

STATIC INVERTER 60KVA 208/120V AC 60 HZ, 3PH

1

NOTE 12

MANUAL BYPASS SWITCH

B

A

4P MCCB

1EUEVT01

3PHASE, 3 WIRE, 60HZ.
FROM LOAD CENTER 1
SEE REF DRAWING E1-0000-00001

3P MCCB

ISOLATION TRANSFORMER, THREE PHASE 208/120V AC, 60HZ 60KVA

1

INVERTER

2P MCCB

SWITCH

STATIC SWITCH

4P

STATIC INVERTER 60KVA 208/120V AC 60 HZ, 3PH

1

NOTE 12

MANUAL BYPASS SWITCH

B

A

4P MCCB

1EUEVT02

1EUEAA01

N.C. 4P MCB

N.O. 4P MCB NOTE 14

4 MCB

UPS SAFE SWITCHGEAR
208/120V AC

1

NOTES:

1. ALL MEASUREMENT AND BYPASS SWITCH POSITION TO BE READ ON THE GRAPHIC DISPLAY.
2. A COMMON TROUBLE SIGNAL OUTPUT (OPEN ON TROUBLE i.e. SERIES COMBINATION OF DRY CONTACTS AS REQUIRED) WILL BE PROVIDED FOR REMOTE ALARM AND DISCONNECTION.
3. MAGNETIC BREAKERS WITH ADJUSTABLE MAGNETIC TRIP RATINGS.
4. NEUTRAL OF UPS SHALL BE EARTHED AT ONE POINT AT INVERTER. NEUTRAL SHALL BE ISOLATED FROM EARTH AT THE TRANSFORMER/DISTRIBUTION PANEL SIDE.
5. EARTH NEUTRAL AT INVERTER OUTPUT.
6. A CONTACT WILL BE PROVIDED EACH FOR COMMON REMOTE ALARM AS WELL AS FOR LOCAL OPEN INDICATION FOR EACH FEEDER BREAKER.
7. EACH BATTERY CHARGER AND BATTERY IS SIZED TO FEED 100% OF LOAD.
8. EQUIPMENT AND BREAKER SIZING TO BE CONFIRMED (LATER).
9. SYSTEM VOLTAGE VARIATIONS ARE AS FOLLOWS:
   - 125V DC +10%, -15%
   - 480V AC +/- 10%
   - 208/120V AC +/- 2% (1)
10. CABLES FROM BATTERIES SHALL BE SIZED TO CARRY FULL FAULT CURRENT.
11. ALL SWITCHBOARDS AND PANELBOARDS WILL BE PROVIDED WITH 30% SPARE SPACE.
12. DURING NORMAL OPERATION, THE INVERTER SHALL SUPPLY POWER TO THE LOADS. UPON LOSS OF DC POWER, THE STATIC SWITCH WILL AUTOMATICALLY TRANSFER LOADS TO ISOLATION TRANSFORMER.
13. LOCAL AND REMOTE ALARM INDICATION SHALL BE PROVIDED.
14. DURING NORMAL OPERATION, THE TIE BREAKER SHALL BE OPEN. NO AUTOMATIC TRANSFER IS PROVIDED.
15. CONSUMERS WILL BE DOUBLE FED WITH DIODE DC-COUPLING CIRCUITS LOCAL TO CONSUMERS.

REFERENCE DRAWINGS:

1. MAIN SINGLE LINE DIAGRAM E1-0000-00001

LEGEND:

- CIRCUIT BREAKER
- LOAD BREAK DISCONNECT (LBD)
- SHUNT
- FUSE
- DC TO DC CONVERTER
- DC TO AC CONVERTER

AVS	AUTOMATIC VOLTAGE STABILIZER
2P	2 POLE
4P	4 POLE
27	UNDERVOLTAGE
59	OVERVOLTAGE
64	EARTH FAULT SUPERVISION
MCB	MINIATURE CIRCUIT BREAKER
MCCB	MOULDED CASE CIRCUIT BREAKER
NO	NORMALLY OPEN
NC	NORMALLY CLOSED
V	VOLTMETER
A	AMMETER

NO.	DATE	REVISIONS	BY	CHK	APPR
2	01/28/21	ISSUED FOR INFORMATION			
1	10/30/20	ISSUED FOR INFORMATION	RVV	JJR	VS

Owner
U. S. DEPARTMENT OF ENERGY, OFFICE OF FOSSIL ENERGY, NATIONAL ENERGY TECHNOLOGY LABORATORY

Contractor
BECHTEL NATIONAL, INC.

FEED STUDY FOR CARBON CAPTURE PLANT RETROFIT

DC AND UPS SINGLE LINE DIAGRAM

Sheet Size	Scale
594 X 841 "A1"	N.T.S

JOB NO.	DRAWING NO.	REV.
26301	000-E1-0000-00002	001

Acknowledgment: This material is based upon work supported by the Department of Energy Award Number DE-FE0031848.
Disclaimer: This report was prepared as an account of work sponsored by an agency of the United States Government. Neither the United States Government nor any agency thereof, nor any of their employees, makes any warranty, express or implied, or assumes any legal liability or responsibility for the accuracy, completeness, or usefulness of any information, apparatus, product, or process disclosed, or represents that its use would not infringe privately owned rights. Reference herein to any specific commercial product, process, or service by trade name, trademark, manufacturer, or otherwise does not necessarily constitute or imply its endorsement, recommendation, or favoring by the United States Government or any agency thereof. The views and opinions of authors expressed herein do not necessarily state or reflect those of the United States Government or any agency thereof.

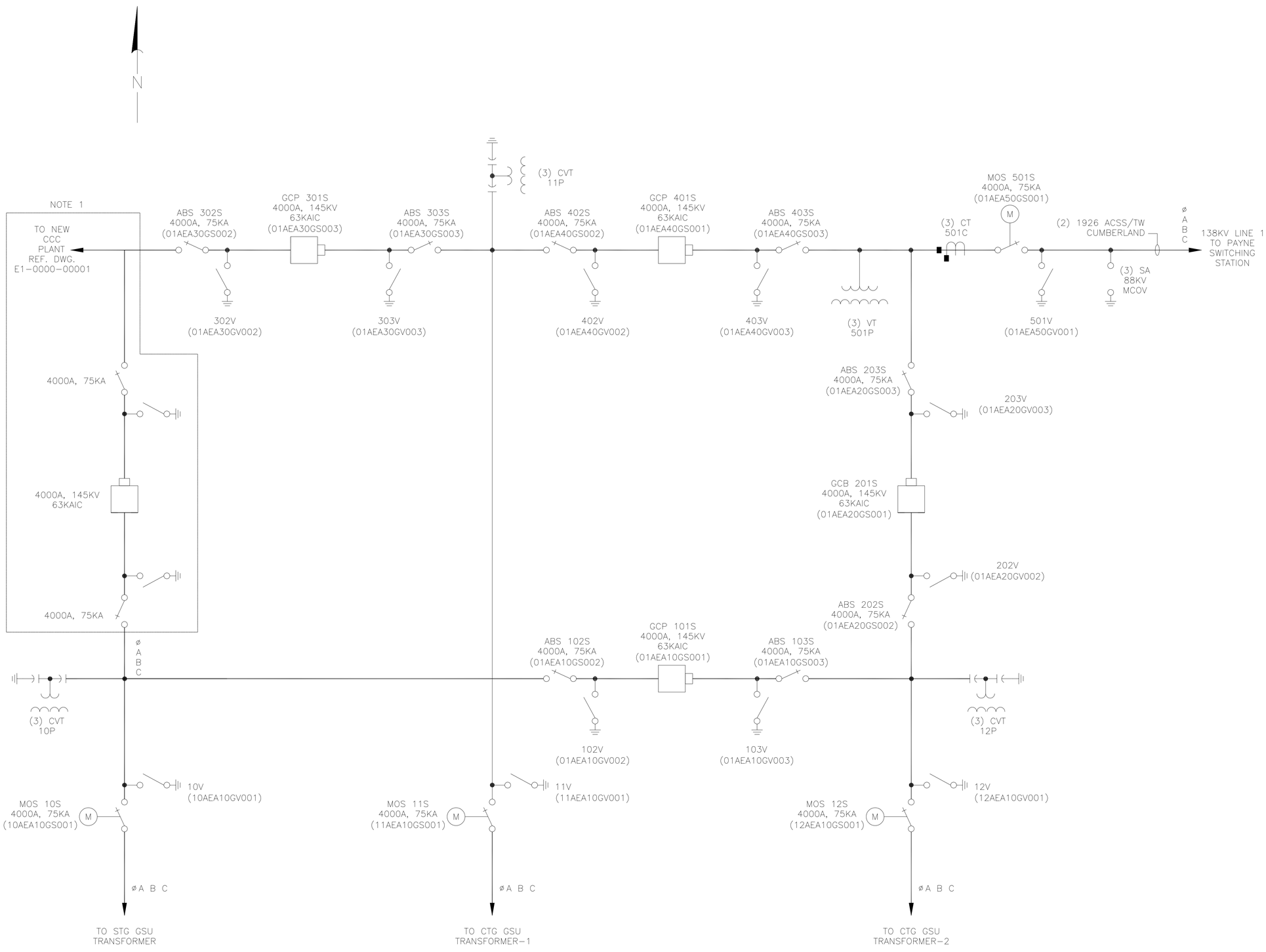

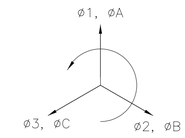

PHASE ROTATION

NOTES:

1. THE DASHED LINE INDICATES THE CHANGES REQUIRED TO THE EXISTING 138KV SWITCHYARD TO ACCOMODATE THE CONNECTION OF THE CARBON CAPTURE AND COMPRESSION PLANT.

NO.	DATE	REVISIONS	BY	CHK	APPR
000	10/30/20	ISSUED FOR INFORMATION			

Owner
U. S. DEPARTMENT OF ENERGY, OFFICE OF FOSSIL ENERGY, NATIONAL ENERGY TECHNOLOGY LABORATORY

Contractor
BECHTEL NATIONAL, INC.

FEED STUDY FOR CARBON CAPTURE PLANT RETROFIT

138KV SINGLE-LINE DIAGRAM

Sheet Size	Scale
594 X 841 "A1"	N.T.S

JOB NO.	DRAWING NO.	REV.
26301	000-E1-0000-00003	000

Appendix L: Miscellaneous Electrical Drawings

Electrical Routing Plan - Cable Trench

- 26301-000-ER-0300-00001

Electrical Routing Plan - Cable Ladder - CCC Facility West Side

- 26301-000-ER-0310-00001

Electrical Routing Plan - Cable Ladder - CCC Facility East Side

- 26301-000-ER-0310-00002

Hazardous Area Classification Drawing

- 26301-000-U5Y-0000-00001

Equipment Location Plan - Electrical Switchgear Building

- 26301-000-E4-0310-00001

Acknowledgment: This material is based upon work supported by the Department of Energy Award Number DE-FE0031648

Disclaimer: This report was prepared as an account of work sponsored by an agency of the United States Government. Neither the United States Government nor any agency thereof, nor any of their employees, makes any warranty, express or implied, or assumes any legal liability or responsibility for the accuracy, completeness, or usefulness of any information, apparatus, product, or process disclosed, or represents that its use would not infringe privately owned rights. Reference herein to any specific commercial product, process, or service by trade name, trademark, manufacturer, or otherwise does not necessarily constitute or imply its endorsement, recommendation, or favoring by the United States Government or any agency thereof. The views and opinions of authors expressed herein do not necessarily state or reflect those of the United States Government or any agency thereof.

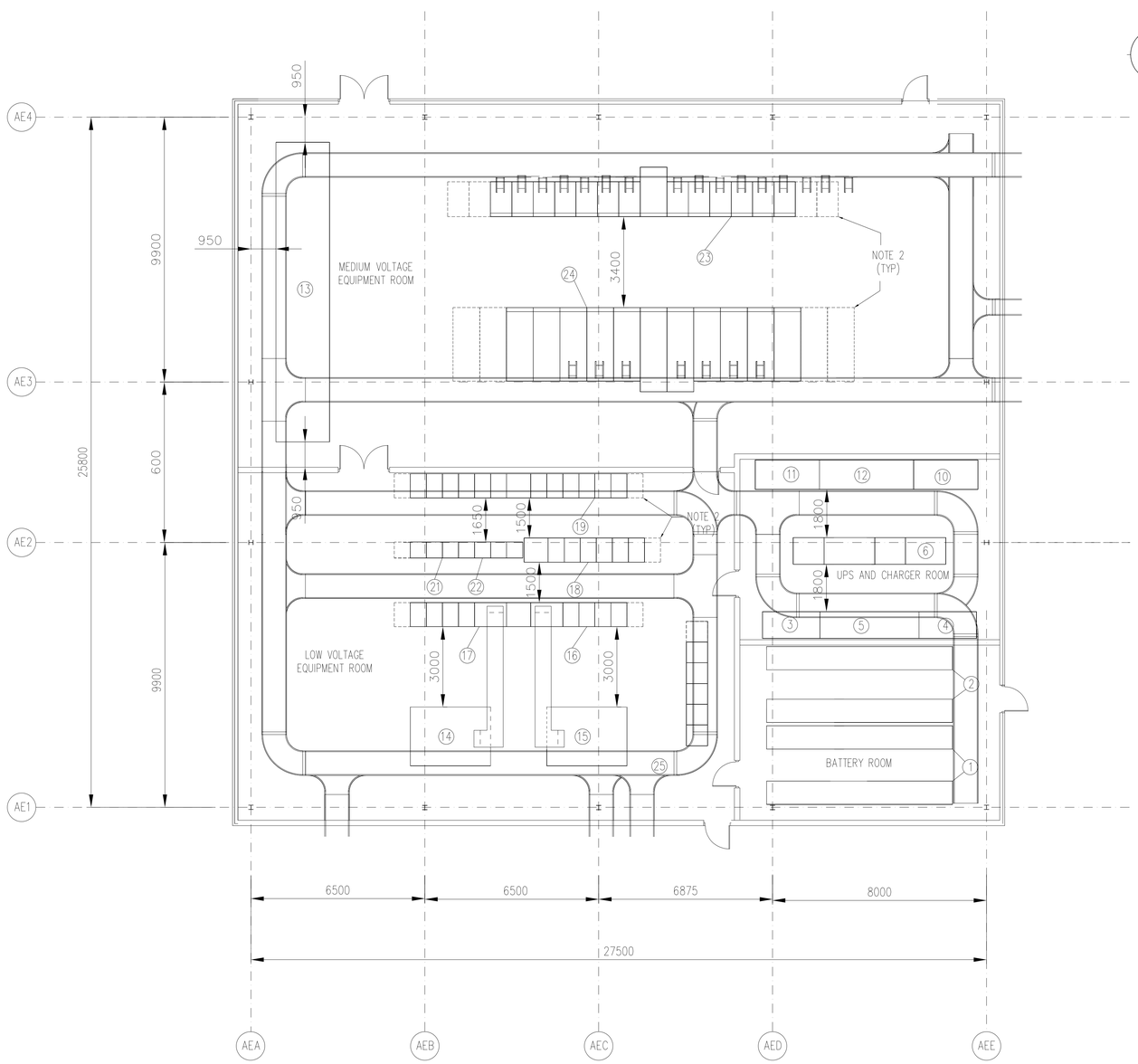

FLOOR PLAN

SCALE: 1:100

LEGEND

ID NO.	EQUIPMENT TAG NO.	DESCRIPTION
1	1EDEDB01	125V BATTERIES
2	1EDEDB02	125V BATTERIES
3	1EDEDC01	BATTERY CHARGER A
4	1EDEDC02	BATTERY CHARGER B
5	1EDEA001	125V DC SWITCHBOARD
6	1EDEA002	125V DC PANELBOARD
7	–	–
8	–	–
9	–	–
10	1EUEVT01	INVERTER & ISOLATION TRANSFORMER
11	1EUEVT02	INVERTER & ISOLATION TRANSFORMER
12	1EUEAA01	UPS SAFE SWITCHGEAR 480/230VAC
13	1ESEYU01	CAPACITOR BANK
14	1ECETP01	LOAD CENTER TRANSFORMER
15	1ECETP02	LOAD CENTER TRANSFORMER
16	1ECEKL01	480 LOAD CENTER
17	1ECEKL02	480 LOAD CENTER
18	1ECECM03	ESSENTIAL MCC
19	1ECECM01	480V MCC
20	1EUEVT02	480V MCC
21	–	LIGHTING SWITCHGEAR
22	–	HEAT TRACE SWITCHGEAR
23	1ESES102	4.16 KV SWITCHGEAR
24	1ESES101	13.8 KV SWITCHGEAR
25	–	DCS (DISTRIBUTED CONTROL SYSTEM) CABINETS

NOTES:

1. ALL DIMENSIONS ARE IN MILLIMETERS UNLESS NOTED OTHERWISE.
2. EQUIPMENT INDICATED AS "DASHED" REPRESENTS FUTURE EXPANSION OF SWITCHGEAR, LOAD CENTERS, DCS CABINETS AND MCC'S.

0 2 4 6 8 10M

SCALE: 1:100

NO.	DATE	REVISIONS	BY	CHK	APPR
0	24 NOV 2020	ISSUED FOR INFORMATION			

Owner

U. S. DEPARTMENT OF ENERGY, OFFICE OF FOSSIL ENERGY, NATIONAL ENERGY TECHNOLOGY LABORATORY

Contractor

BECHTEL NATIONAL, INC.

FEED STUDY FOR CARBON CAPTURE PLANT RETROFIT

EQUIPMENT LOCATION PLAN
ELECTRICAL SWITCHGEAR BUILDING

Sheet Size 594 X 841 "A1" Scale N.T.S

JOB NO.	DRAWING NO.	REV.
26301	000–E4–0310–00001	0

Acknowledgment: This material is based upon work supported by the Department of Energy Award Number DE-FE0031848
Disclaimer: This report was prepared as an account of work sponsored by an agency of the United States Government. Neither the United States Government nor any agency thereof, nor any of their employees, makes any warranty, express or implied, or assumes any legal liability or responsibility for the accuracy, completeness, or usefulness of any information, apparatus, product, or process disclosed, or represents that its use would not infringe privately owned rights. Reference herein to any specific commercial product, process, or service by trade name, trademark, manufacturer, or otherwise does not necessarily constitute or imply its endorsement, recommendation, or favoring by the United States Government or any agency thereof. The views and opinions of authors expressed herein do not necessarily state or reflect those of the United States Government or any agency thereof.

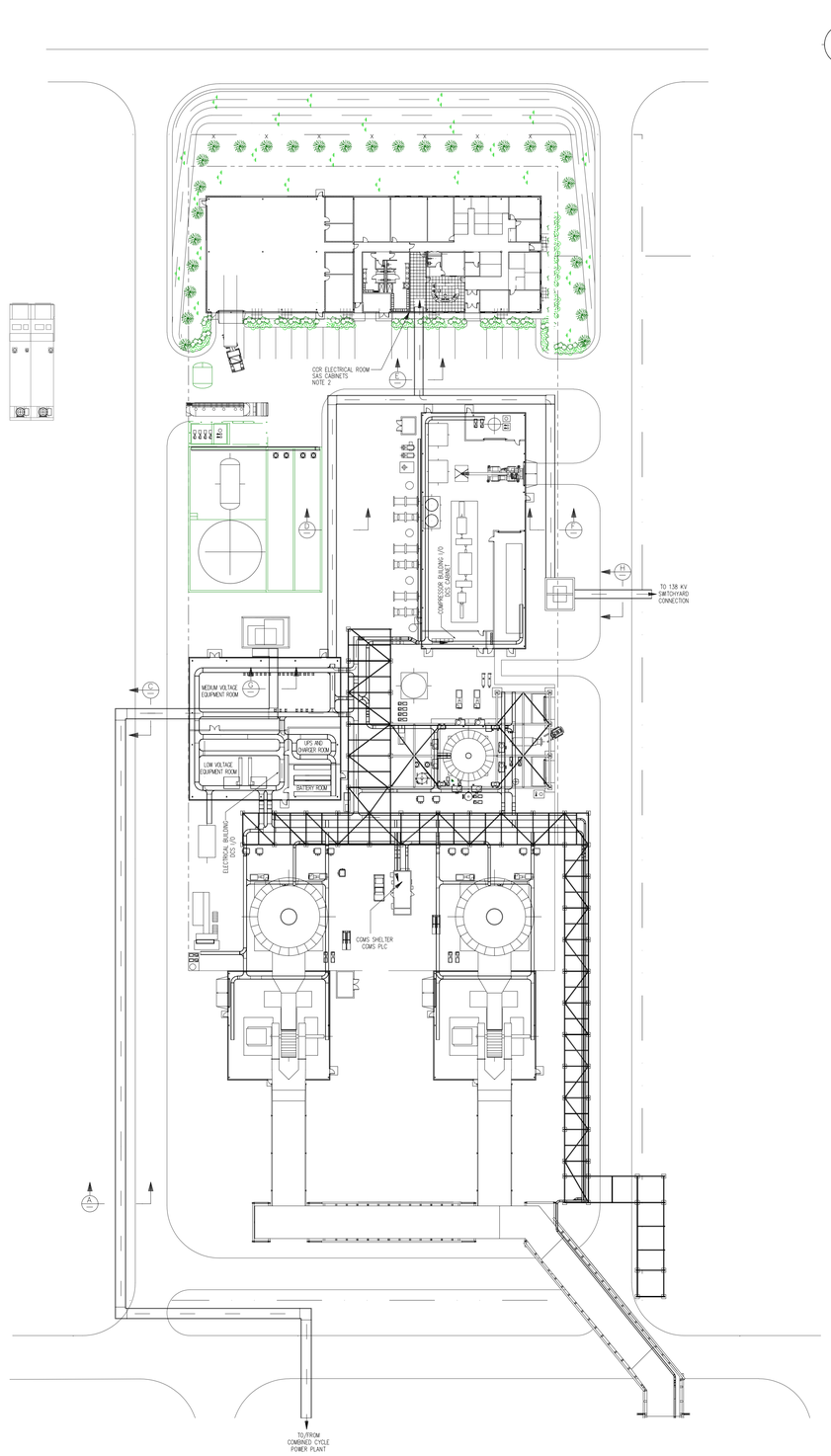

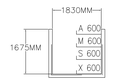

SECTION A-A
LOOKING NORTH

SECTION B-B
NOT USED

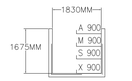

SECTION C-C
LOOKING WEST

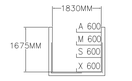

SECTION D-D
LOOKING NORTH

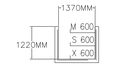

SECTION E-E
LOOKING NORTH

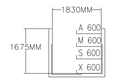

SECTION F-F
LOOKING NORTH

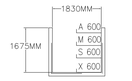

SECTION G-G
LOOKING NORTH



SECTION H-H
LOOKING WEST

NOTES:

1. ALL DIMENSIONS ARE IN METERS UNLESS NOTED OTHERWISE.
2. CABLE TRENCHES SHALL BE PREFABRICATED WITH 100MM THICK WALLS, BOTTOMS AND WILL BE REINFORCED WITH STEEL FABRIC.
3. TRENCH LIDS SHALL BE 100MM THICK STEEL FABRIC REINFORCED CONCRETE.
4. TRENCH CROSSING PLANT ROADS SHALL BE HS-20 RATED.
5. CABLES INSTALLED IN TRENCHES IN ZONE 2, GROUP IIA AREAS WILL BE QUALIFIED ACCORDINGLY TO MINIMIZE FLAME PROPAGATION.
6. CONCRETE BARRIERS WITH SEALED CONDUIT SLEEVES WILL BE PROVIDED TO MINIMIZE FLAME PROPAGATION.
7. CABLE LADDERS SHALL BE STAINLESS STEEL OR APPROVED EQUAL.
8. LADDERS SHALL BE MADE ELECTRICALLY CONTINUOUS BY INSTALLATION OF BONDING JUMPERS.
9. CABLE LADDERS ARE DESIGNED TO MAINTAIN THE FOLLOWING CABLE SEPARATION:
   A – MEDIUM VOLTAGE POWER CABLES
   M – LOW VOLTAGE POWER CABLES
   S – NON-IS INSTRUMENT AND CONTROL
   X – IS INSTRUMENT AND CONTROLS
10. CABLE LADDERS ARE DESIGNED TO MAINTAIN 300MM FREE SPACE BETWEEN THE TOP OF ONE LADDER AND THE BOTTOM OF ANOTHER.
11. RACEWAY DESIGNATIONS FOR CABLE LADDER WIDTH IS AS SHOWN BELOW:
    300 – 300MM WIDE
    450 – 450MM WIDE
    600 – 600MM WIDE
    900 – 900MM WIDE
12. CABLE LADDERS ARE IDENTIFIED BY VOLTAGE LEVEL AND SIZE.
13. CABLE LADDERS FOR INSTRUMENT AND CONTROL, BOTH IS AND NON-IS, SHALL BE INSTALLED WITH BARRIERS TO MAINTAIN SEPARATION.
10. TRENCH SHALL BE PROVIDED WITH EMBEDED UNISTRUT IN THE WALLS AND FLOOR FOR RACEWAYS SUPPORTS.

NO.	DATE	REVISIONS	BY	CHK	APPR
0	9 NOV 2020	ISSUED FOR INFORMATION			

Owner
U. S. DEPARTMENT OF ENERGY, OFFICE OF FOSSIL ENERGY, NATIONAL ENERGY TECHNOLOGY LABORATORY

Contractor
BECHTEL NATIONAL, INC.

FEED STUDY FOR CARBON CAPTURE PLANT RETROFIT

ELECTRICAL ROUTING PLAN CABLE TRENCH

Sheet Size	Scale	
594 X 841 "A1"	N.T.S	
JOB NO.	DRAWING NO.	REV.
26301	000-ER-0300-00001	0

Acknowledgment: This material is based upon work supported by the Department of Energy Award Number DE-FE0031848

Disclaimer: This report was prepared as an account of work sponsored by an agency of the United States Government. Neither the United States Government nor any agency thereof, nor any of their employees, makes any warranty, express or implied, or assumes any legal liability or responsibility for the accuracy, completeness, or usefulness of any information, apparatus, product, or process disclosed, or represents that its use would not infringe privately owned rights. Reference herein to any specific commercial product, process, or service by trade name, trademark, manufacturer, or otherwise, does not necessarily constitute or imply its endorsement, recommendation, or favoring by the United States Government or any agency thereof. The views and opinions of authors expressed herein do not necessarily state or reflect those of the United States Government or any agency thereof.

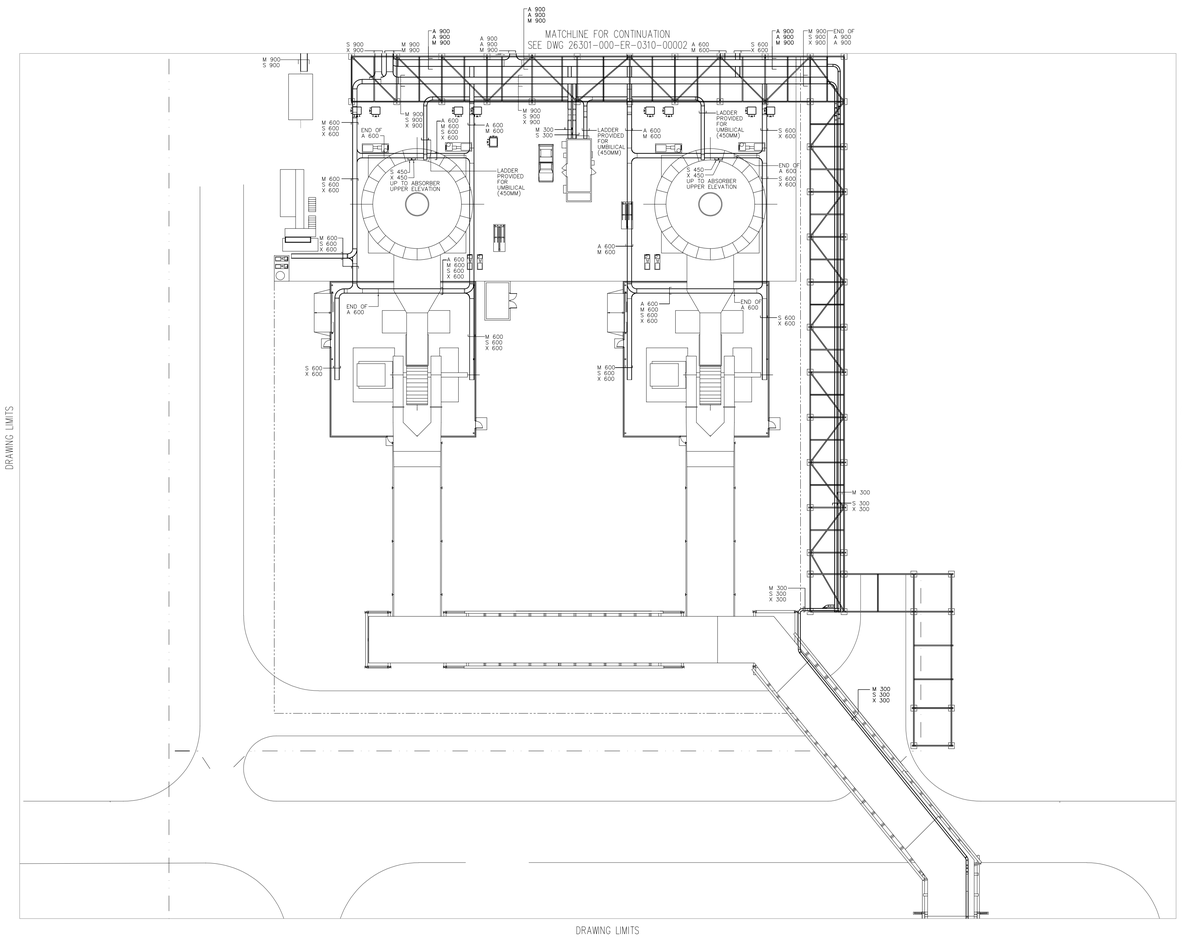

NOTES:

1. ALL DIMENSIONS ARE IN MILLIMETERS. ALL ELEVATIONS ARE IN METERS.
2. RACEWAY DESIGN IS PRELIMINARY AND IS INTENDED TO DEPICT MAIN ROUTING SCHEME.
3. ALL OUTDOOR CABLE LADDERS SHALL BE STAINLESS STEEL OR APPROVED EQUAL.
4. ALL INDOOR CABLE LADDERS SHALL BE HOT DIPPED GALVANIZED STEEL.
5. ALL VERTICAL AND HORIZONTAL LADDERS THAT MAY BE EXPOSED TO PHYSICAL DAMAGE SHALL BE COVERED.
6. MINIMUM BEND RADIUS SHALL BE 12" FOR ALL HORIZONTAL AND VERTICAL BENDS.
7. MAXIMUM SPAN BETWEEN SUPPORTS SHALL BE 4 METERS.
8. LADDERS SHALL BE MADE ELECTRICALLY CONTINUOUS BY INSTALLATION OF BONDING JUMPERS.
9. FOR TRANSITION FROM STAINLESS TO GALVANIZED LADDERS, A 10MM DISTANCE SHALL BE MAINTAINED BETWEEN THE TWO SYSTEMS.
10. CABLE LADDERS ARE DESIGNED TO MAINTAIN THE FOLLOWING CABLE SEPARATION:
    A – MEDIUM VOLTAGE POWER CABLES
    M – LOW VOLTAGE POWER CABLES
    S – NON-IS INSTRUMENT AND CONTROL
    X – IS INSTRUMENT AND CONTROL
11. CABLE LADDERS ARE DESIGNED TO MAINTAIN 300MM FREE SPACE BETWEEN THE TOP OF ONE LADDER AND THE BOTTOM OF ANOTHER.
12. RACEWAY DESIGNATIONS FOR CABLE LADDER WIDTHS IS AS SHOWN BELOW:
    300 = 300MM WIDE
    450 = 450MM WIDE
    600 = 600MM WIDE
    900 = 900MM WIDE
13. CABLE LADDERS ARE DESIGNED SO THAT LADDERS FROM DIFFERENT SYSTEMS CROSS AT RIGHT ANGLES.
14. CABLE LADDERS ARE DESIGNED TO PROVIDE 14M OF SEPARATION BETWEEN MEDIUM VOLTAGE POWER AND INSTRUMENT/CONTROL LADDERS.
15. CABLE LADDERS ARE IDENTIFIED BY VOLTAGE LEVEL, SIZE, AND ARE LISTED IN ORDER FROM TOP TO BOTTOM (SEE LEGEND FOR DETAILS).

LEGEND:

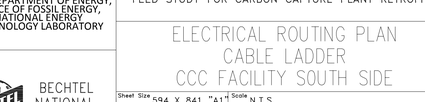

NO.	DATE	REVISIONS	BY	CHK	APPR
0	6 NOV 2020	ISSUED FOR INFORMATION			

Owner
U. S. DEPARTMENT OF ENERGY, OFFICE OF FOSSIL ENERGY, NATIONAL ENERGY TECHNOLOGY LABORATORY

Contractor
BECHTEL NATIONAL, INC.

FEED STUDY FOR CARBON CAPTURE PLANT RETROFIT

ELECTRICAL ROUTING PLAN CABLE LADDER CCC FACILITY SOUTH SIDE

Sheet Size 594 X 841 "A1" Scale N.T.S

JOB NO.	DRAWING NO.	REV.
26301	000-ER-0310-00001	0

Acknowledgement: This material is based upon work supported by the Department of Energy Award Number DE-FE0031949

Disclaimer: This report was prepared as an account of work sponsored by an agency of the United States Government. Neither the United States Government nor any agency thereof, nor any of their employees, makes any warranty, express or implied, or assumes any legal liability or responsibility for the accuracy, completeness, or usefulness of any information, apparatus, product, or process disclosed, or represents that its use would not infringe privately owned rights. Reference herein to any specific commercial product, process, or service by trade name, trademark, manufacturer, or otherwise, does not necessarily constitute or imply its endorsement, recommendation, or favoring by the United States Government or any agency thereof. The views and opinions of authors expressed herein do not necessarily state or reflect those of the United States Government or any agency thereof.

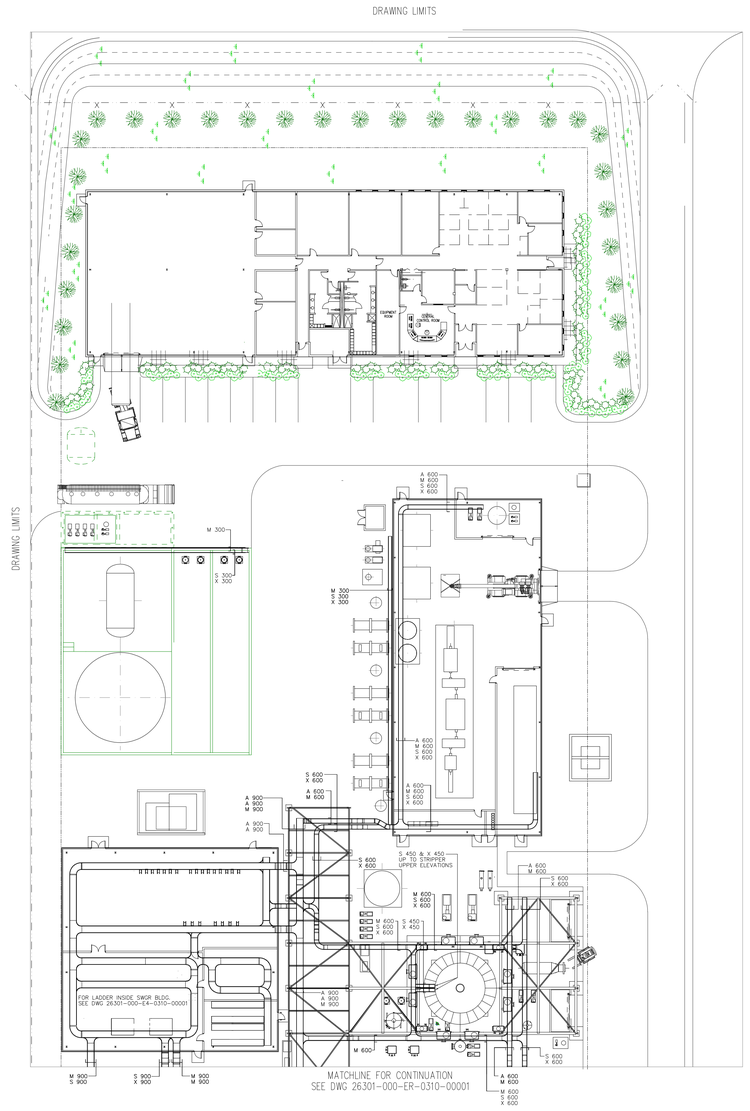

N

NOTES:

1. ALL DIMENSIONS ARE IN MILLIMETERS. ALL ELEVATIONS ARE IN METERS.
2. RACEWAY DESIGN IS PRELIMINARY AND IS INTENDED TO DEPICT MAIN ROUTING SCHEME.
3. ALL OUTDOOR CABLE LADDERS SHALL BE STAINLESS STEEL OR APPROVED EQUAL.
4. ALL INDOOR CABLE LADDERS SHALL BE HOT DIPPED GALVANIZED STEEL.
5. ALL VERTICAL AND HORIZONTAL LADDERS THAT MAY BE EXPOSED TO PHYSICAL DAMAGE SHALL BE COVERED.
6. MINIMUM BEND RADIUS SHALL BE 12" FOR ALL HORIZONTAL AND VERTICAL BENDS.
7. MAXIMUM SPAN BETWEEN SUPPORTS SHALL BE 4 METERS.
8. LADDERS SHALL BE MADE ELECTRICALLY CONTINUOUS BY INSTALLATION OF BONDING JUMPERS.
9. FOR TRANSITION FROM STAINLESS TO GALVANIZED LADDERS, A 10MM DISTANCE SHALL BE MAINTAINED BETWEEN THE TWO SYSTEMS.
10. CABLE LADDERS ARE DESIGNED TO MAINTAIN THE FOLLOWING CABLE SEPARATION:
    A – MEDIUM VOLTAGE POWER CABLES
    M – LOW VOLTAGE POWER CABLES
    S – NON-IS INSTRUMENT AND CONTROL
    X – IS INSTRUMENT AND CONTROL
11. CABLE LADDERS ARE DESIGNED TO MAINTAIN 300MM FREE SPACE BETWEEN THE TOP OF ONE LADDER AND THE BOTTOM OF ANOTHER.
12. RACEWAY DESIGNATIONS FOR CABLE LADDER WIDTHS IS AS SHOWN BELOW:
    300 = 300MM WIDE
    450 = 450MM WIDE
    600 = 600MM WIDE
    900 = 900MM WIDE
13. CABLE LADDERS ARE DESIGNED SO THAT LADDERS FROM DIFFERENT SYSTEMS CROSS AT RIGHT ANGLES.
14. CABLE LADDERS ARE DESIGNED TO PROVIDE 14M OF SEPARATION BETWEEN MEDIUM VOLTAGE POWER AND INSTRUMENT/CONTROL LADDERS.
15. CABLE LADDERS ARE IDENTIFIED BY VOLTAGE LEVEL, SIZE, AND ARE LISTED IN ORDER FROM TOP TO BOTTOM (SEE LEGEND FOR DETAILS).
16. CABLE LADDERS FOR INSTRUMENT AND CONTROL, BOTH IS AND NON-IS, SHALL BE INSTALLED WITH BARRIERS TO MAINTAIN SEPARATION.

LEGEND:



NO.	DATE	REVISIONS	BY	CHK	APPR
0	9 NOV 2020	ISSUED FOR INFORMATION			

Owner
U. S. DEPARTMENT OF ENERGY, OFFICE OF FOSSIL ENERGY, NATIONAL ENERGY TECHNOLOGY LABORATORY

Contractor
BECHTEL NATIONAL, INC.

FEED STUDY FOR CARBON CAPTURE PLANT RETROFIT

ELECTRICAL ROUTING PLAN
CABLE LADDER
CCC FACILITY NORTH SIDE

Sheet Size 594 X 841 "A1" Scale N.T.S

JOB NO.	DRAWING NO.	REV.
26301	000-ER-0310-00002	0

Acknowledgment: This material is based upon work supported by the Department of Energy (award Number DE-FE0031548).
Disclaimer: This report was prepared as an account of work sponsored by an agency of the United States Government. Neither the United States Government nor any agency thereof, nor any of their employees, makes any warranty, express or implied, or assumes any legal liability or responsibility for the accuracy, completeness, or usefulness of any information, apparatus, product, or process disclosed, or represents that its use would not infringe privately owned rights. Reference herein to any specific commercial product, process, or service by trade name, trademark, manufacturer, or otherwise does not necessarily constitute or imply its endorsement, recommendation, or favoring by the United States Government or any agency thereof. The views and opinions of authors expressed herein do not necessarily state or reflect those of the United States Government or any agency thereof.

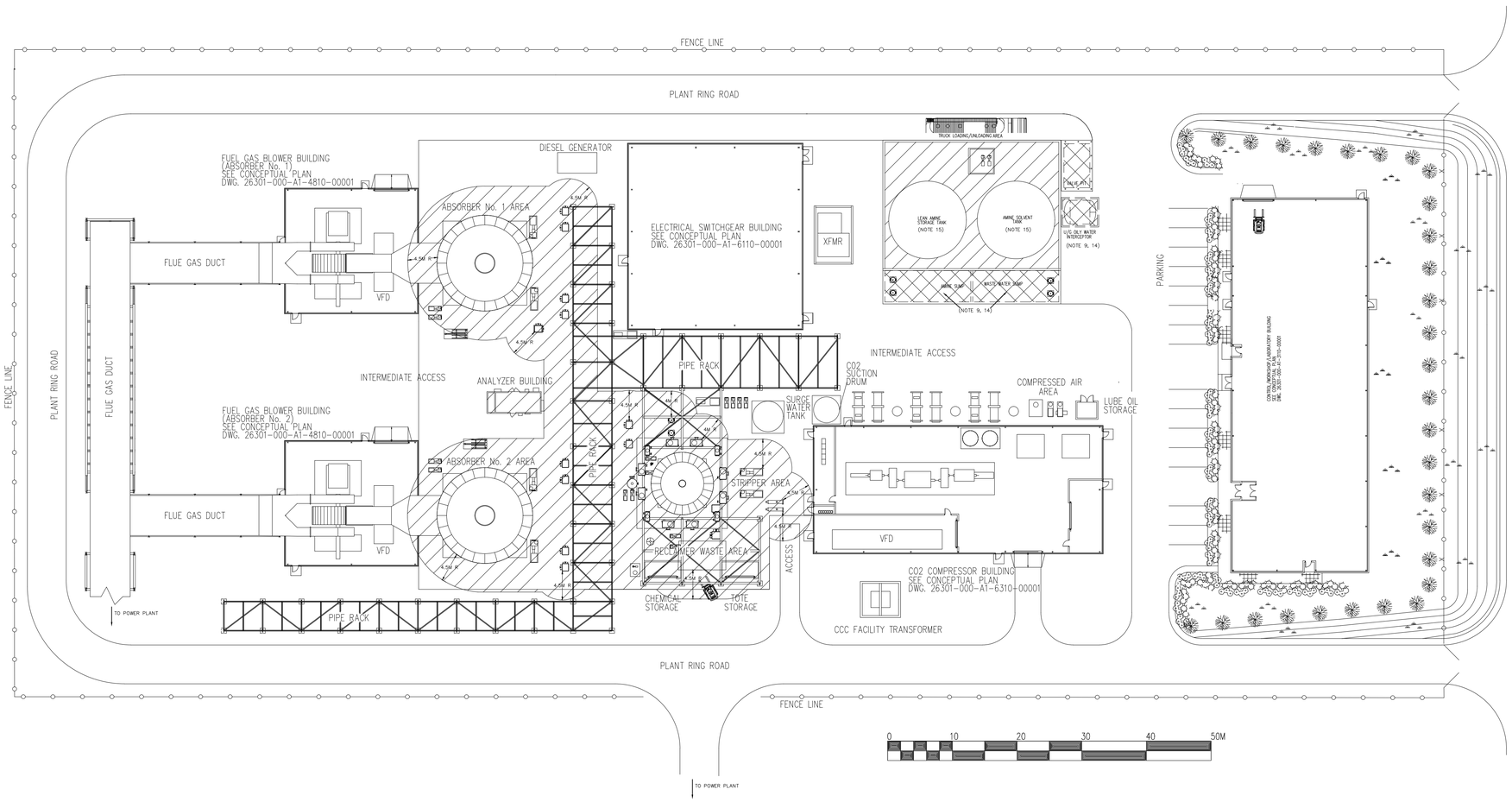

NOTES:

1. NUMBER AND CONFIGURATION OF REBOILERS AND ASSOCIATED INLET/OULET PIPING IS TO BE FINALISED DURING DETAILED ENGINEERING BASED ON VENDOR DETAILS.
2. ALL DIMENSIONS ARE IN METERS UNLESS NOTED OTHERWISE.
3. AREA CLASSIFICATION HAS BEEN BASED ON THE "ENERGY INSTITUTE: AREA CLASSIFICATION CODE FOR INSTALLATIONS HANDLING FLAMMABLE FLUIDS PART 15 OF THE IP MODEL CODE OF SAFE PRACTICE IN THE PETROLEUM INDUSTRY, 3RD EDITION, JULY 2005.
4. DELETED.
5. AS A MINIMUM ALL ELECTRICAL EQUIPMENT INSTALLED IN CLASSIFIED AREAS OR OUTDOORS SHALL BE SUITABLE FOR HAS GROUP IIA.
6. THE EXTENT OF HAZARDOUS RADIUS IS BASED ON DETAILS AND NOTES A THROUGH F BELOW.

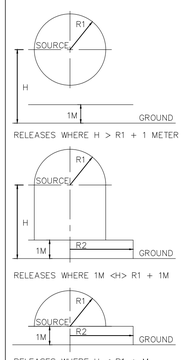

A. R1 IS HAZARDOUS RADIUS LOCAL TO SOURCE OF RELEASE.
B. R2. IS HAZARDOUS RADIUS LOCAL TO SOURCE AT GRADE.
C. H IS HEIGHT OF SOURCE ABOVE GROUND LEVEL OR SOLID PLATFORM FLOOR.
D. HAZARDOUS RADIUS IS DETERMINED FROM ANNEX C OF IP 15, 3RD EDITION. TABLES 09(A) AND 09(B).
E. HAZARDOUS AREAS SHOWN SHALL BE CLASSIFIED AS ZONE 1 OR ZONE 2 DEPENDING ON THE GRADE OF RELEASE (SEE SECTIONS 1.6.4 & 1.6.5 OF IP 15 3RD EDITION)
F. ALL PITS AND DEPRESSIONS IN HAZARDOUS AREAS SHOULD BE CONSIDERED IN ACCORDANCE WITH THE DEFINITION IN SECTION 5.4.90IF IP 15, 3RD EDITION.

7. EQUIPMENT DRAINS AND LIQUID SAMPLE POINTS ARE CLASSIFIED IN ACCORDANCE WITH TABLE 5.2 OF IP 15 3RD EDITION.
8. INSTRUMENT VENTS ARE CLASSIFIED IN ACCORDANE WITH TABLE C9(A) OF IP 15 3RD EDITION.
9. PROCESS VENTS ARE CLASSIFIED IN ACCORDANCE WITH TABLE 5.5 AND FIG 5.3 OF IP 15 3RD EDITION.
10. PIPEWORK IN INTERCONNECTING PIPERACK/TRACKS ARE ASSUMED TO BE FULLY WELDED AND ARE NOT CONSIDERED AS CREDIBLE SOURCES.
11. RELIEF VALVES ARE ASSUMED PIPED TO FLARE OR OTHER SUITABLE LOCATION.
12. RELEASE FREQUENCY I AND II AS PER IP 15.
13. ALL DIMENSIONS ARE AT GRADE LEVEL IN THE VICINITY OF THE SPECIFIC ITEM OF EQUIPMENT.
14. THESE UNDERGROUND OR BELOW GRADE EQUIPMENT TAGS ARE CLASSIFIED AS ZONE 1 AS PER IP 15 3RD EDITION. UNGERGROUND SYSTEMS ARE TREATED AS "VENTED, SEALED SUMPS, INTERCEPTORS AND SEPARATORS" TO SECTION 5.4.8 REQUIREMENTS. ABOVE GRADE CLASSIFICATION SHALL FOLLOW NOTE 9 ABOVE FOR ATMOSPHERIC VENTS.
15. ULLAGE SPACE IN TANK TO BE CLASSIFIED ZONE 0.

LEGEND:

CLASSIFIED AS NON HAZARDOUS AREA

ZONE 1
APPARATUS SUB-GROUP IIA
TEMPERATURE CLASS T2

ZONE 2
APPARATUS SUB GROUP IIA
TEMPERATURE CLASS T2

NO.	DATE	REVISIONS	BY	CHK	APPR
0	02/03/21	ISSUED FOR INFORMATION	KML	VS	VS

Owner
U. S. DEPARTMENT OF ENERGY, OFFICE OF FOSSIL ENERGY, NATIONAL ENERGY TECHNOLOGY LABORATORY

Contractor
BECHTEL NATIONAL, INC.

FEED STUDY FOR CARBON CAPTURE PLANT RETROFIT

HAZARDOUS AREA CLASSIFICATION

Sheet Size 594 X 841 "A1" Scale AS SHOWN

JOB NO.	DRAWING NO.	REV.
26301	000-U5Y-0000-00001	0

Appendix M: Electric Load Summary

Appendix M -
Electrical Load Estimate

Item No.	Tag No.	Item Description	Capacity Per Component	Rated Power (Note 1) kW	Normal Operation Required Power for Auxiliary Loads (kW)	Remarks
1	1BAMA101	Flue gas blower (Absorber 1)	lx100% per Train (50% per Unit)	5296	5072	
2	1BAMA102	Flue gas blower (Absorber 2)	1 x100% per Train (50% per Unit)	5296	5072	
3	1PAMC101A	Instrument/Service Air Compressor A	1 x 100%	55	45	
4	1PAMC101B	Instrument/Service Air Compressor B	1 x 100%	55	0	Standby
5	1QGMC103	Air Cooler for Air Compressor A	1 x 100%	7.5	5.6	
6	1QGMC103	Air Cooler for Air Compressor B	1 x 100%	7.5	0	Standby
7	1CYME118	Fresh Amine Storage Tank Heaters	1 x 100%	10	0	Summer period considered in estimating total loads
8	1CYME119	Lean Amine Solvent Storage Tank Heater	1 x 100%	150	0	Summer period considered in estimating total loads
9	1CNMP101A	Rich Amine Pumps (Absorber 1) A	1 x 100%		764	
10	1CNMP101B	Rich Amine Pumps (Absorber I) B	1 x 100%		0	Standby
11	1CNMP124A	Rich Amine Pumps (Absorber 2) A	1 x 100%		764	
12	1CNMP124B	Rich Amine Pumps (Absorber 2) B	1 x 100%		0	Standby
13	1CNMP102A	Wash Water Recirculation Pump (Absorber 1) A	1 x 100%		236	
14	1CNMP102B	Wash Water Recirculation Pump (Absorber 1) B	1 x 100%		0	Standby
15	1CNMP104A	Wash Water Recirculation Pump (Absorber 2) A	1 x 100%		236	
16	1CNMP104B	Wash Water Recirculation Pump (Absorber 2) B	1 x 100%		0	Standby
17	1CNMP105A	Lean Amine Pump A	1 x 100%		648	
18	1CNMP105B	Lean Amine Pump B	1 x 100%		0	Standby
19	1CNMP106A	Flash Drum Pump A	1 x 100%		97	
20	1CNMP106B	Flash Drum Pump B	1 x 100%		0	Standby
21	1CNMP107A	Reflux Pump A	1 x 100%		22	
22	1CNMP107B	Reflux Pump B	1 x 100%		0	Standby
23	1CNMS107	Antifoam Injection Skid	1 x 100%	10.0	0.1	Intermittent
24	1QGMP108A	CO2 Product Sendout Pump A	1 x 100%	1219	911	
25	1QGMP108B	CO2 Product Sendout Pump B	1 x 100%		0	Standby
26	QGMC103A/B/C	CO2 Compressor	1 x 100%	13260	13260	3-Stage Compressor
27	1BAMP109A	Flue Gas Trim Fogger Water Supply Pump A	1 x 100%	16	16	
28	1BAMP109B	Flue Gas Trim Fogger Water Supply Pump B	1 x 100%		0	Standby
29	1BAMP209A	Flue Gas Primary Foggers Water Supply Pump A	1 x 100%	16	16	
30	1BAMP209B	Flue Gas Primary Fogger Water Supply Pump B	1 x 100%		0	Standby
31	1CYMP111A	Lean Amine Solvent Fill Pump A	1 x 100%	25	25	
32	1CYMP111B	Lean Amine Solvent Fill Pump B	1 x 100%		0	Standby
33	1XWMP112A	Amine Waste Sump Pump A	1 x 100%	9.4	8.17	
34	1XWMP112B	Amine Waste Sump Pump B	1 x 100%		0	Standby
35	1XWMP113A	Wastewater Forwarding Pump A	1 x 100%	9.4	7.5	
36	1XWMP113B	Wastewater Forwarding Pump B	1 x 100%		0	Standby
37	1XWMP114A	Waste Spray Water Forwarding Pump	1 x 100%	9.4	7.5	
38	1XWMP114B	Waste Spray Water Forwarding Pump	1 x 100%		0	
39	1CYMP117A	Caustic Metering Pump A	1 x 100%	1.1	0.1	
40	1CYMP117B	Caustic Metering Pump B	1 x 100%		0	Standby
41	1WPMP119A	Absorber make-up water Pump A	1 x 100%	24.0	24.0	
42	1WPMP119B	Absorber make-up water Pump B	1 x 100%		0	Standby
43	1QGMC103	CO2 Compressor Lube Oil Pumps A	1 x 100%	7.5	7.50	
44	1QGMC103	CO2 Compressor Lube Oil Pumps B	1 x 100%		0	Standby
45	1BAMA101	Flue Gas Blower Lube Oil Pumps A	1 x 100%	4	4.0	
46	1BAMA101	Flue Gas Blower Lube Oil Pumps B	1 x 100%		0	Standby
47	1BAMA102	Flue Gas Blower Lube Oil Pumps C	1 x 100%	4	4.0	
48	1BAMA102	Flue Gas Blower Lube Oil Pumps D	1 x 100%		0	Standby
49	1PAMS105A	Instrument Air Dryer A	1 x 100%	11	10	
50	1PAMS105B	Instrument Air Dryer B	1 x 100%		0	Standby
51	1CYMS103	Reclaimer Chemical Feed Package	1 x 100%	5.5	5	
52	1QGMS104	CO2 Drying Package	1 x 100%	11	10	
53	1BAMD008A	Common Flue Gas Duct Isolation Dampers A	1 x 100%		0	
54	1BAMD008B	Common Flue Gas Duct Isolation Dampers B	1 x 100%		0	
55	1BAMD034A	Flue Gas Duct Isolation Damper (Absorber 1)	1 x 100%		0	
56	1BAMD034B	Flue Gas Duct Isolation Damper (Absorber I) B	1 x 100%		0	
57	1BAMD060A	Flue Gas Duct Isolation Damper (Absorber 2)	1 x 100%		0	
58	1BAMD060B	Flue Gas Duct Isolation Damper (Absorber 2) B	1 x 100%		0	
59	1ANMG101	Standby Diesel Generator			0	
60	1ANMG101	Emergency Diesel Gen Battery Charger		2	1.0	
61	1ANMG101	Emergency Diesel Gen Heater		9	0.7	
62	1ESEYU01	Power Factor Correction Capacitors		0.5	1.0	

63	1ESEVV01	CO2 Compressor ASD		2	1.0	
64	1ESEVV02	Flue Gas Blower ASD - Blower A		1	1.0	
65	IESEVV03	Flue Gas Blower ASD - Blower B		I	1.0	
66	1ESETP01	PCC Facility Transformer (Cooling Circuit)			1.0	
67	1ESETP01	PCC Facility Transformer (Relay Panel)		1		
68	1ESETP02	Dead Time Transformer			1.0	
69	1ESETP03	Stepdown Transformer			1.0	
70	1ESETP01	Load Center Transformer I			1.0	
71	1ESETP02	Load Center Transformer 2			1.0	
72	1ESES101	13.8kV Switchgear (Relays & Lights Coils)		5	4.1	
73	1ESES102	4.16kV Switchgear (Relays & Lights, Coils)		11	10.6	
74	1ECEKL01	480V Load Center I		1	0.5	
75	1ECEKL02	480V Load Center 2		I	0.5	
76	1ECECM01	480V MCC I		1.5	1.4	
77	1ECECM02	480V MCC 2		1.5	1.4	
78	1ECECM03	Essential MCC		1.5	1.4	
79	1EDEDC01	125V Battery Charger A		80	6	
80	1EDEDC02	125V Battery Charger B			6	
81	1EDEDB01	125V Lead Acid Battery I				
82	1EDEDB02	125V Lead Acid Battery 2				
83	1EDEAD01	1 25V DC Bus				
84	1EDEAD02	125V DC Panel Board				
85	1EDEAD03	125V DC Switchboard				
86	1EDEVT01	125VDC/24VDC to 120/208 VAC Inverter 1				
87	1EDEVT02	125VDC/24VDC to 120/208 VAC Inverter 2				
88	Later	MOVS				
89	Later	Control Bldg HVAC Units A	1 x 100%	110	61.6	
90	Later	Control Bldg HVAC Units B	1 x 100%		0	Standby
91	Later	Electric Building HV Units		80	44.8	
92	Later	CO2 Compressor Analyzer Room HVAC		5		
93	Later	CO2 Compressor Analyzer Room HVAC		5		
94	Later	Vent Fans (Compressor Building)		100	70	
95	Later	Vent Fans (Blower Building - Absorber 1) - 3 fans		64	45	
96	Later	Vent Fans (Blower Building - Absorber 2) - 3 fans				
97	Later	Office/Workshop HV Units		82	45.6	
98	Later	Labrotary HVAC Unit		3		
99	Later	Battery Room Exhaust Fan A		0.2		
100	Later	Battery Room Exhaust Fan B		0.2		
101	Later	ESD (Control Cabinet)		I	0.7	
102	Later	PSD (Control Cabinet)		0.5	0.36	
103	Later	CGMS Shelter HVAC		2.5	2.5	
104	Later	Communication Systems			0	
105	Later	Motor Heaters			0	
106	Later	F&G Detection System		I	0.7	
107	Later	Electrical Heat Tracing		250	0	Summer period considered in estimating total loads
108	Later	DCS (Control Cabinet)		0.5	0.36	
109	Later	Lighting		160	158	
110	Later	IMS Server		1	0.76	
111	Later	Domain Controller		1	0.76	
112	Later	Interface Server		1.5	1.5	
113	Later	DCS Operator Station		2	1.7	
114	Later	DCS Engineer Station		1	0.86	
115	Later	CGMS DAHS		I	0.76	
116	Later	Historian		0.25	0.22	
117	Later	Printer - Laser		2	1.9	
118	Later	132" Multiscreen		2.5	2.1	
119	Later	Compressor Building I/O		2.5	2.2	
120	Later	Electrical Building I/O		0.5	0.5	
121	Later	Compressor Bldg Unit Heaters - 8 htrs		15		Summer period considered in estimating total loads
122	Later	Comp Bldg VFD Area Unit Heaters - 2 htrs		15.00		Summer period considered in estimating total loads
123	Later	Comp Bldg Wtr Treat Are Unit Heater - 1 Htr		15		Summer period considered in estimating total loads
124	Later	Absorber 1 Blower Bldg Unit Heaters - 4 Htrs		15.0		Summer period considered in estimating total loads
125	Later	Absorber 2 Blower Bldg Unit Heaters - 4 Htrs		15.0		Summer period considered in estimating total loads
				Total	27763	kW
				Total (with margin)	29000	kW

Appendix N: HAZID Worksheet

Node: **1. Construction and Project Hazards Site Wide**
Drawings: 26301-000-P1-0010-00001
Design Conditions/Parameters:

Hazard	Cause	Consequences	Safeguards	Recommendations
1. Fire Hazard	Flash fire	1. Personnel injury	Work permit procedures	Job Hazard Evaluation/STAART Card
2. Construction waste	Disposal of construction waste and dust	1. Improper disposal 2. Dust exposure to personnel	Construction waste management plan Dust control Plan	
3. Tornados and Lightning	Extreme weather conditions	1. Personnel injury 2. Possible damage to equipment	Site Emergency Response and Evacuation Early Warning System Shelters	Adequate shelters are to be established on site, for both construction and operational phases
4. Incidence of contagious diseases	Diseases with high infection rates	1. Personnel exposure	Appropriate ES&H plan Proper PPE such as face masks	
5. Negative Impact to Existing Evacuation Plan	CO2 Capture Plant interfering with exiting evacuation route	1. Personnel exposure to CCC emissions during evacuation using existing egress routes	Muster points and alarms	Review a) integrated alarm plan between facilities, b) general escape routing to muster point may be near CO2 plant. Needs to be addressed with Sherman Plant/Panda Power.

			Control Room signal exchange communication	A joint review of the HAZID issues with the existing CCPP is required as well as an overall integration event. Update the Emergency Response Plan and routing for off-site egress
6. Noise	Start up and intermittent noise	1. Exceed regulatory requirements	Design to meet permit limits	
7. Spill Disposal	Liquid and solid uncontrolled release	1. Occupational exposure and environmental exposure	Design specification for site conditions Curbs and bunds	Ensure there is a plan for containment of spills and proper disposal
8. Vehicle Accident	Perimeter breach damage of equipment and chemical exposure	1. Asset damage and possible worker exposure and environmental exposure 2 Potential chemical and fire	Routing plan, speed limit and proper signage	Update vehicle traffic plan
9. Process and Rainwater Disposal	Water is directed to storm water line or treated, and process water is treated in ZLD	1. Contamination of the water	None in effect	Need to review capacity of rainwater / firewater management that is contaminated and treatment requirements
11.Unplanned Interruption To Construction	Alarm during the time of a construction activity which cannot be aborted	1. Possible Personnel injury	Construction ESH plan will address the issue	Heavy lift plan to be reviewed by Panda.
12. Rigging During Construction	Strong winds	1. Possible personnel injury or equipment damage due to rigging failure	Rigging plan to be developed	

13. Crane-Use	Crane boom failure	1. Possible personnel injury or equipment damage due to rigging failure	Crane plan will address issue	
14. Icy Conditions	Icing of stairs and ladders	1. Personnel injury	Standard safety plan is to be followed Demister at top of absorbers	
15. Lack of Accessibility of Emergency Vehicles	No road access in some areas, such as in between the blowers	1. Cannot access with current configuration	Emergency response procedure will cover	
16. Lack of Escape Routes	Any emergency that requires evacuation	1. May not be able to evacuate	Emergency Plan will cover evacuation scenarios	
17. Equipment Damage Due to Utility Failure	Steam/Cooling Water/Electrical failure	1. Process upset 2. Loss of heat tracing	Design to incorporate safe failure	Develop cold weather emergency drain procedure to protect equipment and facilities from freezing
18. Area Classification	Gas leak from power plant	1. Possible ignition if electrical equipment is not qualified	Design ensures that impacted equipment is classified Separation from potential gas sources	
19. Possible Accidents due to Lack of Accessibility	Permanent equipment interferes with crane location	1. Difficulty in construction	Safety measures during construction	Constructability plan in place prior to start of construction
20. Construction Impact on Operating Power Plant	Mechanical/Electrical tie-in's to plant, etc.	1. Impact on power plant operation	Construction strategy review with owner	Tie-ins to be scheduled with Panda.
21. Site Security Breach	Construction personnel during Carbon Capture retrofit	1. Access to power plant through CO2 capture plant	Construction area will be isolated from the Power Plant	The Power Plant security plan must be revised to account for Carbon Plant

Node: **2. Rich Gas Processing**
Drawings: 26301-000-P1-0010-00001
Design Conditions/Parameters:

Hazard	Cause	Consequences	Safeguards	Recommendations
1. Emission	Flue gas discharge through the absorbers	1. Visual plume 2. New emission point	Permit will be obtained, and dispersion analysis will be performed	Issue of absorbers' discharge creating plume needs to be addressed after the environmental assessment.
2. CO2 Venting	Overpressure relief or depressuring of compression system	1. Emission of high concentrations of CO2 through leakages or relief valves	Relief valves will vent to safe areas (i.e. high elevations)	Ensure CO2 concentration at highest stack platforms, is within safe limits.
3. Isolation of Individual Absorbers	Absorber maintenance while second is in operation	1. Personnel exposure because operating blower cannot be isolated	Positive isolation added to the design	

Node: **3. Flue Gas**
Drawings: 26301-000-P1-0010-00001
Design Conditions/Parameters:

Hazard	Cause	Consequences	Safeguards	Recommendations
1. High pressure water	Pipe rupture	1. Personnel injury and duct damage	Piping design	In accordance with the Code, hydrostatic testing to be conducted to ensure pipe integrity
2. Flue gas exposure (due to composition)	Damper open	1. Personnel exposure	Ensure proper closure of damper to minimize potential leakage	
3. Flue Gas exposure (due to temperature)	Damper open	1. Personnel exposure	Ensure proper closure of damper to minimize potential leakage	
4. Ice Snow on Pipe/Duct Racks	Winter conditions	1. Personnel injury	To be addressed in site maintenance plan	
5. Impact on Control Room	Ductwork leak	1. Hot flue gas to HVAC intake	Induced draft system	Review that duct leakage near control room does not affect the **HVAC**
6. Tie-In at Existing Flue Gas Duct	Leakages at tie-in locations during CO2 capture plant construction	1. Worker exposure	Guillotine damper will be in place	Review if Guillotine damper is adequate for worker exposure during construction and for unit shutdown isolation
7. Construction Near Existing Buildings (Control Room, STG Electrical Room)	Duct routing	1. Construction above/near buildings with personnel	Safety measures during construction	Lifting of steel/ducting around Control Room and STG Electrical Room to be discussed with Sherman Plant.

Node: **4. Amine Section**
Drawings: 26301-000-P1-0010-00001
Design Conditions/Parameters:

Hazard	Cause	Consequences	Safeguards	Recommendations
1. Exposure to Hazardous Material	Reclaimer sludge, spent carbon, spent amine solution, filter cartridges	1. Exposure of materials to personnel and environment	Plan for waste handling, intermittent storage and disposal will be established, including lab reagents.	
2. Dyke Area Drainage	Rainwater Disposal	1. Contamination of the water	Routed to the amine sump	
3. LP/MP Steam	Pipe rupture	1. Personnel injury	Pipe design per code	
4. Amine Spillage	Pipe and seal failure	1. Personnel exposure	To be addressed in design by selecting the right seal type and pipe class PPE requirements identified	
5. Exposure to High Temperature Amine	Sampling requirements	1. Personnel exposure due to hot sampling	Sample coolers PPE requirements identified	
6. Ignition in Electrical Equipment	Selection of inappropriate electrical equipment	1. Ignition possibility	To be addressed in design 37% amine solution is below flammable limit	
7. Reclaimed Material	Volume of sludge to be stored	1. Reclaimer vessel is full	Some flexibility to stop reclaiming if containment is full	

			Reclaimer Vessel drained to tanker for off-site disposal	
8. Neutralization Chemical Exposure	Chemicals required for reclaim neutralization	1. Chemical for reclaiming must be handled by trained personnel	PPE requirements identified	
9. CO2 Liberation in Rich Amine Storage	Elevated ambient temperature	1. CO2 to atmosphere and personnel exposure	Vent to be directed to safe location Nitrogen blanketing	
10. Laboratory Waste	Method of disposal not identified	1. Personnel exposure	Appropriate safety plan for collection and disposal of waste	Require list of laboratory reagents that will be used. Method for storing laboratory waste is required

Node: **5. CO2 Compression and Send Out**
Drawings: 26301-000-P1-0010-00001
Design Conditions/Parameters:

Hazard	Cause	Consequences	Safeguards	Recommendations
1. CO2 Release from Ruptured Pipeline	Pipe failure	1. Pipeline damage and emergency shutdown	Pipe design	Identify location of CO2 pipeline failure and plant response.
				Compressor shutdown and hydraulic shock review during design
2. Proximity of Capture Plant Control Building from Compressor	Compressor or pipe rupture	1. Asphyxiation due to CO2 in Control building	Compressors are located within own building therefore CO2 will be contained.	Provide adequate distance between control room and compressor building to avoid hazard.
3. Dense-Phase CO2	Auto-refrigeration	1. Possible personnel injury	PPE to be worn	Review if the compressor and pump should be segregated
			Detectors in vicinity.	Escape route should be free and clearly marked to evacuate area
		2. Possible damage to auxiliary equipment due to temperature	Depressurizing facilities on compressor and surge drum	Review auto-refrigeration temperature and ensure equipment is designed adequately
				Ensure Emergency Procedure addresses CO2 release response

4. CO2 Exposure at Low Points	Leaks will result in CO2 accumulation at low points since CO2 is heavier than air	1. Personnel injury/asphyxiation	Ventilation and detection	Review low points for possible CO2 accumulation
5. Difficulty in Evacuating from CO2 Capture Plant	CO2 release due to rupture	1. CO2 escape to environment	Evacuation plan will be in place	Establish a plan to notify Sherman Power Plant personnel of CO2 release

Appendix O: HAZOP Worksheets

Meeting Attendance:

Name	Job Title	Email	Present on:					
			Day 1	Day 2	Day 3	Day 4	Day 5	Day 6
Antonino Nicotra	HAZOP Facilitator	anicotra@bechtel.com	x	x	x	x	x	x
August Benz	Process Engineer	gusdb@msn.com	x	x	x	x	x	x
Vinay Singh	Project Engineer	vxsingh@bechtel.com	x	x	x	x	x	x
Martin Curtis	Process Engineer	mcurtis1@bechtel.com	x	x	x	x	x	x
Joseph Diaz	Startup Engineer	jmdiaz@bechtel.com	x	x	x	x	x	x
Kameron Flournoy	Scribe	kflourno@bechtel.com	x	x	x	x	x	x
Camila Bauer	Scribe	cbauer2@bechtel.com	x	x	x	x	x	x

Node 1: Flue Gas System from Flue stack to the Absorber, T-101, included
Node Intent: To Blow Flue Gas toward the Absorber and cool it with water fogging remove the CO2 with amine and wash to remove entrained amine prior to discharge to atmosphere
PFDs: BA-00001, CN-00001/2
P&IDs: BA-00001/2/3, CN-00010/20/30

*Note: Analysis was recorded only for Absorber T-101, but all scenarios apply to T-102 and its respective down/upstream equipment.

Deviation	Cause	Consequence	Safeguards	Mitigated Risk Ranking RR	Comments	Recommendations
No/Less Flow	1-BA-MD-900 fails close or FD912 fails close	No flow of flue gas from HRSG will upset and damage the gas turbine, possibly leading to loss of containment. Potential fatalities. No flow into blowers might create vacuum in the ductwork and potential collapse.	Gas turbine is protected by HP exhaust gas trip. PI902C with H and L pressure alarms. LLL pressure in duct from HRSG will trip the blower.	E3[Property]	There will be a change in the logic to add interlock to flue gas dampers to prohibit the startup of the turbine. The flow to T-102 is monitored by delta FI0058. Add L, LL and LLL to PI0006A/B to M6-BA-00001	Ensure to add a trip to the turbine in case all dampers are closed. Consider the need for low flow alarm in this section. Consider NFPA85 requirements for HRSG protection.
No/Less Flow	1-BA-MD-034 fails close or PV0035 fails close	Lower flow from the HRSGs will upset the GT. Limited damage, less severe than the scenario above. No flow into blowers might create vacuum in the ductwork and potential collapse. Recovery of CO2 decreases to only one absorber, potential environmental impact.	Gas turbine is protected by HP trip.	E2[Property and Env.]		Consider adding LL flow or pressure to trip the blower, and add alarms to notify operator.
No/Less Flow	Flue gas blower MA-101 or MA-102 stops	Lower flow from the HRSGs will upset the GT. Limited damage, less severe than the scenario above. Recovery of CO2 decreases to only one absorber, potential environmental impact.	Gas turbine is protected by HP trip.	E2[Env.]		
No/Less Flow	No hot wash water due to MP-102A/B stopping	Amine lost to atmosphere, potential environmental impact. Process make up water will continue flowing into the Absorber, increasing water level in the chimney section. Water will overflow into Absorber bottoms, diluting amine. Impact to water balance, loosing more water thru absorber vent gas, increasing fresh water demand in CCU.	H liquid level alarm LIC0110A.	E2[Env.]		Consider adding a pump stop alarm. Consider adding a L flow alarm to FIC0168 [CN-00030].

Deviation	Cause	Consequence	Safeguards	Mitigated Risk Ranking RR	Comments	Recommendations
No/Less Flow	No flow of lean amine due to FV0530A failing close	Amine level increases in the stripper. The discharge of the reboiler will affect the thermosyphon reboiler. Potential to flood the bottom of the stripper. The lean amine flow to the absorber reduces CO2 removal and also rich amine will drop off. Environmental impact. CO2 production to the compressor will decline.	H, HH, HHH liquid level alarm LIT-0620 A/B/C in the Stripper. The minimum flow loop will fully open and recirculate back to the Stripper. LL liquid level on LI100C will stop pumps MP-101A and B, shut off damper MD034 and inlet damper PV0035, will stop flue gas blower MA-101, and closes shut-off valve HV0300A. Online gas analyzer at the top of the Absorber.	E2[Env.]	Additional credit could be taken from CO2 Master but team has no sufficient information to define it as a safeguard. Risk seems to be mitigated.	Consider adding a H CO2 concentration alarm at the Absorber vent gas analyzer, AI0122.
No/Less Flow	No flow of semi-lean amine due to LV0440A failing close	Increased semi-lean amine level in the Semi-Lean Amine Flash Drum, MV-201. The semi-lean amine flow to the absorber reduces CO2 removal and also rich amine will drop off. Environmental impact. CO2 production to the compressor will decline.	Level in flash drum will increase, LI0426A and B will give H and HH level alarms.	E2[Env.]		
No/Less Flow	HRSG damper fails open during CCU operation	No impact to the Power Plant. Potential reduced flow to CCU, upsetting the process without foreseeable damage.	PI902C L or PI915C pressure alarm.	E2[Env.]		Consider adding a L flow alarm to FIC905A and FIC918A.
No/Less Flow	No flow of spray water into the Fogger MS-101A [Pumps MP-209A/B stops, or Filter plugin, any valve closure, or fogger nozzles plugged]	Flue gas temperature will increase substantially. CO2 removal in Absorber will decrease, environmental impact.	Fogger system downstream of MS-101A and Absorber is designed for flue gas temperature of 100degC.	E2[Env.]		Ensure TIC0012 alarms H temperature. Consider adding a standby or duplex filter upstream of MP-209A/B [BA-00002]. Consider adding a L flow alarm on FI0097 [BA-00002].
No/Less Flow	No flow of spray water into the Fogger MS-101B [Pumps MP-109A/B stops, or Filter plugin, any valve closure, or fogger nozzles plugged]	Flue gas temperature will increase substantially. CO2 removal in Absorber will decrease, environmental impact.	Fogger system upstream of MS-101B. If temperature doesn't drop enough, Absorber is designed for flue gas temperature of 100degC. H temperature alarm TIC0014.	E2[Env.]		Consider adding a standby or duplex filter upstream of MP-209A/B [BA-00002]. Consider adding a L flow alarm on FI0093 and FI0095 [BA-00002].

Deviation	Cause	Consequence	Safeguards	Mitigated Risk Ranking RR	Comments	Recommendations
More Flow	HRSG damper fails closed during CCU operation	Possible higher back pressure on gas turbines and reduced Power Plant output, possible trip of GT. Blowers MA-101 and MA-102 might stop. 100% of flue gas will flow to CCU, leading to extreme high flue gas velocities in Absorber, flooding the Absorber leading to pressure surges and shutting down the Power Plant. Amine will enter wash water and be released to atmosphere from vent stack. Potential environmental impact.	PI902C H or PI915C pressure alarm. H pressure alarm PI006A/B. H pressure differential alarm PDI0104, 106, and 108.	E2[Env.]		Consider adding a H flow alarm to FIC905A FIC918A.
More Flow	Any of the flue gas dampers fails closed during CCU operation	Similar to scenario described above.		E2[Env.]		
More Flow	MA-101 or MA-102 fails	More flow to a single Absorber and operating blower. Similar to scenario described above.		E2[Env.]		
More Flow	FV0530A fails fully open	More lean amine flow to the absorber, potentially flooding the bottom beds of absorbers and restricting flue gas through the absorber. Potentially backing up pressure to the flue gas and therefore blowers and gas turbines.	CO2 master will measure lean amine flow through FIT-0530A. HH liquid level on LI100C will shut off damper MD034 and inlet damper PV0035, stopping blower MA-101, stops all amine pumps MP-105, 106, 111, 112, and absorber make up water pump MP-119, and closes shut-off valves HV0501, FV0530A, and LV0440A.	Risk is fully mitigated.		
More Flow	LV0440A fails fully open	More semi-lean amine flow to the absorber. Significantly less consequential than scenario described above since semi-lean flow is significantly less than the lean amine flow.		Risk is fully mitigated.		
More Flow	LV0170 fails fully open	Water is recirculating to and from absorber with minmal impact on absorber level and/or pump MP-102A/B.		Risk is fully mitigated.		
More Flow	LV0160 fails fully open	Reduces level on the Absorber draw tray, potentially lose flow to MP-102A/B. Lose Absorber water wash of amine, increasing amine losses to the atmosphere, potential environmental impact.	L level alarm on LIC0110A	Risk is fully mitigated.		Consider adding a pump stop alarm. Consider adding a L flow alarm to FIC0168 [CN-00030].

Deviation	Cause	Consequence	Safeguards	Mitigated Risk Ranking RR	Comments	Recommendations
Reverse Flow	Foaming in the Absorber bottoms	Foam formation in the Absorber bottoms increases the level in the Absorber but will not be picked up by H level indication, allowing amine to backflow into the duct and eventually damage the blower.	Vibration monitors will trip the blower.Foaming will be picked up by PDI0104/106 H alarm in the packing beds.	Risk is fully mitigated.		
Reverse Flow	Absorber level control failure	Increased level in the Absorber will lead to backflow into the duct and potentially damage the blower.	Vibration monitors will trip the blower. 2 independent level transmitters with HH alarm.	Risk is fully mitigated.		
Higher Level	LV0160 fails fully closed	Increase of water level in the chimney section. Water will overflow into the Absorber packing below the draw tray, diluting amine. No major consequences to the process.	H level alarm on LI0110A	Risk is fully mitigated.		
Higher Level	HV0038 fails close	Level increases in the drip leg, potentially leading to liquid carryover to the blower MP-101, with potential damage	Demister after the fogger Drip leg after the demister	F1 [Financial]	Demister after the fogger MS-101A is showing as future on the P&ID BA-00001, but will be installed.	Consider possibility of negative pressure when designing the drip leg. Consider adding an independent level switch to the drip leg, with an independent H level alarm.
Higher Level	Other scenarios covered by No/Less Flow in Node 2.					
Lower Level	FV0530A or LV0440A fails fully closed	Potential for loss of level in the absorber T-101 causing rich amine pump MP-101A/B to run dry and get damaged. Pump damage may cause release of rich amine to the atmosphere with potential impact to the environment. CO2 removal in Absorber will decrease, environmental impact.	L and LL liquid level alarm in LI0100A, and L and LL liquid level alarm in LI0100B/C which will close shut-off damper PV034, close inlet damper PV0035, stops flue gas blower MA-101, stops rich amine pumps MP-101A/B, and closes HV0300A. CO2 Master.	Risk is fully mitigated.		
Lower Level	LV0160 fails open	Scenario described in More Flow, Node 1.				
Change in Compostion	Higher sulfur contents in Natural Gas feed into Power Plant	Higher sulfur contents in flue gas will lead to higher HSS formation, decreasing amine quality and thus less CO2 removal, environmental impact.	Daily chemical composition analysis of amine will determine H sulfur contents. Amine Reclaimer is designed to remove sulfate Heat Stable Salts (HSS).	D2 [Env.]		

Node 2: Rich Amine from bottom of CO2 Absorber, T-101, to the Stripper, T-103, included
Node Intent: To recover energy from lean Amine and use LP steam in reboiler to strip CO2 from rich amine; and condense steam in the overhead condenser prior to sending CO2 to the compression and drying section
PFDs: CN-00001/2/3/5
P&IDs: CN-00010/40/81/120/130/140/150

*Note: Analysis was recorded only for Absorber T-101, but all scenarios apply to T-102 and its respective down/upstream equipment.

Deviation	Cause	Consequence	Safeguards	Mitigated Risk Ranking RR	Comments	Recommendations
No/Less Flow	Any of the valves are closed on the rich amine stream line	Level in the stripper will drop to the point pump MP-105 will run dry. Potential damage to the pump exists, leading to liquid release and potential temporary injury. Increased level in the Absorber will lead to backflow into the duct and potentially damage the blower.	Stripper 3-element control will open the LV0352 to increase flow of rich amine flow into the stripper and will reduce flow to LP steam by closing FV830A/C. LL liquid level alarm at LI-0620B/C will trip pumps MP-105A/B, will shutdown Lean Amine Outlet valve HV-0501, will close Lean Amine valve FV-0530A (Absorber 1), will close Semi Lean Amine valve LV-0440A (Absorber 1), and equivalent valves for Absorber 2. H and HH level alarm from LI0100A.	E2 [Safety]	Complete the LL trip on the Absorber	Ensure low NPSH stops the pump in case of low flow. [Apply to MP-101 and 105]
		If a valve is closed upstream of MP-101, pump will run dry and potentially get damaged, potential of rich amine release to the environment. If valve is closed downstream of MP-101, pump will shut off.	Inclusion of minimum flow recirculation line. FIT0312A will stop the pump for no/less flow.	E2 [Env.]		Ensure all pumps handling amine have a curb to contain accidental spills

Deviation	Cause	Consequence	Safeguards	Mitigated Risk Ranking RR	Comments	Recommendations
No/Less Flow	Pump failure MP-101 A/B	Level in the stripper will drop to the point pump MP-105 will run dry. Potential damage to the pump exists, leading to liquid release and potential temporary injury. Increased level in the Absorber will lead to backflow into the duct and potentially damage the blower.	Pumps MP-124 A/B from T-102 will supply flow to minimize low liquid level in the stripper. In addition, the stripper 3-element control will open the LV0352 to increase flow of rich amine flow into the stripper and will reduce flow to LP steam by closing FV830A/C. Vibration monitors will trip the blower. 2 independent level transmitters with HH alarm. LL liquid level alarm at LI-0620B/C will trip pumps MP-105A/B, will shutdown Lean Amine Outlet valve HV-0501, will close Lean Amine valve FV-0530A (Absorber 1), will close Semi Lean Amine valve LV-0440A (Absorber 1), and equivalent valves for Absorber 2. H and HH level alarm from LI0100A.	Risk is fully mitigated.		
No/Less Flow	Pump failure MP-107 A/B or closure of any of the valves around the overhead condenser	Stripper reflux drum MV-202 will flood potentially flooding the condensers on the stripper and increasing the pressure on the stripper. This would cause reboiler loosing its duty causing rich amine not be stripped before returning to T-101. CO2 would stop being removed from flue gas through T-101 and would be released to the atmosphere. No consequences to safety and the environment.	Time to overfill the reflux drum is 24 minutes, allowing operator to take action on starting spare pump and/or opening the closed valve. Additionally, there is HH level alarm from LIC0670 and HHH in LI0670A.	Risk is fully mitigated.	P&ID CN-00140, PSD on LI0670A/B is shown although it doesn't have an action. To be clarified in EPC phase.	
		MV-202 floods leading to water entering the compression system, potentially damaging compressors and releasing CO2 leading to fatality.	Time to overfill the reflux drum is 24 minutes, allowing operator to take action on starting spare pump and/or opening the closed valve. CO2 compressor suction drum MV-203 level control will trip the compressor for HH liquid. Inclusion of CO2 concentration indicators in compression building.	Risk fully mitigated.		
No/Less Flow	Filter plugin	Reduced rich amine flow to the stripper. No further consequences identified.	Multiple cartridge housings for each filter with one spare housing and PDAH0370.	Risk fully mitigated.		

Deviation	Cause	Consequence	Safeguards	Mitigated Risk Ranking RR	Comments	Recommendations
No/Less Flow	Loss of LP steam	Reboiler would loose its duty, causing rich amine not be stripped before returning to T-101. CO2 would stop being removed from flue gas through T-101 and would be released to the atmosphere. No consequences to safety and the environment.	Low/high temperature alarms downstream of stripper reboilers. Low temperature alarm TI0622 on stripper.	Risk fully mitigated.		
		Reduction of steam and CO2 from stripper overhead leading to low liquid level in reflux drum MV-202, potentially resulting in reflux pump MP-107A/B damage. No consequences to safety and the environment.	L and LL level alarms in the reflux drum LIC0670. L flow alarm downstream of reflux pumps FIC0682.	Risk fully mitigated.		
More Flow	LV0352 fails, fully open or LV0352 byass valve is left open	Rich amine level in the stripper rises, increasing pressure drop further backing off the reboiler reducing quality of lean amine, and promoting foaming. May cause liquid carryover to reflux drum. Potential for loss of level in the absorber T-101 causing rich amine pump MP-101A/B to run dry and get damaged. Pump damage may cause release of rich amine to the atmosphere with potential impact to the environment.	At the bottom of the Absorber T-101, L and LL level alarm from LI0100A will reduce the flow of lean amine into the Absorber T-101. PSD on LI0100C will stop the rich amine pump MP-101A/B and flue gas blower on LL level. PSD on HHH level alarm from LI0620C at the bottom of the stripper will close LP steam valves and reduce plant load demand.	Risk fully mitigated.		
More Flow	FV0682 fully open or FV0682 bypass valve is left open [CN-00140]	Reduced CO2 stripping in the Stripper T-103, reducing Lean Amine quality. Potentially empyting the stripper reflux drum MV-202, running MP-107 dry and potentially damage. No consequences to safety and the environment.	L and LL level alarms in the reflux drum LIC0670. L flow alarm downstream of reflux pumps FIC0682.	Risk fully mitigated.		
Reverse Flow	No causes identified					
Higher Temperature	Loosing Cooling Water to the Condensers	Steam will not be condensed, increasing reflux drum temperature to 109deg.C. CO2 and steam will reach compressor at high temperature, causing seal damage and leakage, and drive compressor temperatures above design conditions. Potential for release of CO2 leading to fatality. Reflux drum level will run dry, reflux will stop and overheads temperature will increase to approx 120 deg.C (rich amine inlet temperature) Cavitation of MP-107A/B.and pump seal damage	Temperatures will remain within design conditions up to reflux drum through event. Inclusion of CO2 concentration indicators in compression building. Compressors will trip at high temperatures.	F1[ASSET]	Note that temperatures in reflux drum may exceed design temperatures by up to 15 deg.C, particualrly after the drum empties and reflux stops	Consider Increasing design temperature in the reflux drum, and associated piping to be consistent with the highest temperature achieved for this scenario
Higher Temperature	High lean amine temperature from reboilers	No major consequences identified				

Deviation	Cause	Consequence	Safeguards	Mitigated Risk Ranking RR	Comments	Recommendations
Lower Temperature	Lower Temperature of Cooling Water	Density of CO2 will increase, increasing power required for Compressors. No further consequences identified.				
Lower Temperature	Loss of Electrical Heat Tracing	Loose control of entire system because of freezing liquid in the tubing of instrumentation, potentially damaging the instruments, and tubing ruptures leading to loss of containment. Also piping to PSV will freeze, loosing capacity of relieving pressure in case of HP, exceeding design pressure of equipment/vessels and potentially causing rupture. Potential for injuries or fatalities. Potential environmental impact due to spill of rich amine.	Electrical Heat Tracing has its own PLC that will alert operator.	B3 [Safety] D2 [Env.]		Ensure inlet thru all PSVs slopes continuously back to the vessel. Make bypasses around PV0690A/B, horizontal so they're self-draining. Verify the need for Heat Tracing to the PSV0912 on top of Stripper Reflux Drum MV-202.
Higher Pressure	No Causes Identified					
Higher Level	Any of the valves at the bottom of the Stripper T-103 are closed or MP-105 stops.	Rich amine level in the stripper rises, increasing pressure drop further backing off the reboiler reducing quality of lean amine, and promoting foaming. May cause liquid carryover to reflux drum. Potential for loss of level in the absorber T-101 causing rich amine pump MP-101A/B to run dry and get damaged. Pump damage may cause release of rich amine to the atmosphere with potential impact to the environment.	At the bottom of the Absorber T-101, L and LL level alarm from LI0100A will reduce the flow of lean amine into the Absorber T-101. PSD on LI0100C will stop the rich amine pump MP-101A/B and flue gas blower on LL level. PSD on HHH level alarm from LI0620C at the bottom of the stripper will close LP steam valves and reduce plant load demand.	Risk fully mitigated.		
Higher Level	Any of the valves at the bottom of the Stripper Reflux Drum MV-202 are closed or MP-107A/B stops.	Stripper reflux drum MV-202 will flood potentially flooding the condensers on the stripper and increasing the pressure on the stripper. This would cause reboiler loosing its duty causing rich amine not be stripped before returning to T-101. CO2 would stop being removed from flue gas through T-101 and would be released to the atmosphere. No consequences to safety and the environment.	Time to overfill the reflux drum is 24 minutes, allowing operator to take action on starting spare pump and/or opening the closed valve. Additionally, there is HH level alarm from LIC0670 and HHH in LI0670A.	Risk fully mitigated.	P&ID CN-00140, PSD on LI0670A/B is shown although it doesn't have an action. To be clarified in EPC phase.	
Lower Level	Already Covered by No/Less Flow Scenarios					
Change in Composition	No Flue Gas Coming into the Absorber T-101	No CO2 will be released in Stripper T-103 overheads, causing no flow to the Compressors. No further consequences identified.				

Node 3: Semi-Lean Amine from Lean Amine Cooler, ME-102, to the Absorber
Node Intent: To use energy recovered from compression section to heat and flash a rich amine side stream to provide stripping gas to Stripper and semi lean amine to the absorber
PFDs: CN-00003/4/5/1/2
P&IDs: CN-000040/85/100/110/10/120

Deviation	Cause	Consequence	Safeguards	Mitigated Risk Ranking RR	Comments	Recommendations
No/Less Flow	No flow into Semi-Lean Flash Drum MV-201 due to closure of FV0416	Flash vapor to the Stripper T-103 stops, causing level in MV-201 to drop and pumps MP-106A/B will run dry, leading to potential damage to pumps and loss of containment and environmental impact. Temperature of lean amine returning to the Absorber will increase. Reduction of cooling in the compression system, causing seal damage and leakage, and drive compressor temperatures above design conditions.	L and LL liquid level alarms from LI0426A/B, and LIC0440A/B will close the control valves upstream of the Absorber T-101. L and LL flow alarms from FIC0418A/B.	Risk is fully mitigated.		Ensure all pumps handling amine have a curb to contain accidental spills
No/Less Flow	No flow from MV-201 due to failure of MP-106	MV-201 will fill up with amine, overflowing to the Stripper T-103. Rich Amine's low temperature will upset Stripper performance. Stripper amine level will increase. Loose flow into the Absorber T-101, loosing heat exchange in ME-103A/B. No further consequences identified.				
No/Less Flow	Valve closed upstream of MP-106	Pumps MP-106A/B will run dry, leading to potential damage to pumps and loss of containment and environmental impact. MV-201 will fill up with amine, overflowing to the Stripper T-103. Rich Amine's low temperature will upset Stripper performance. Stripper amine loading will increase. Loose flow into the Absorber T-101, loosing heat exchange in ME-103A/B. No further consequences identified.	L and LL liquid level alarms from LI0426A/B, and LIC0440A/B will close the control valves upstream of the Absorber T-101. L and LL flow alarms from FIC0418A/B.	Risk is fully mitigated.		

Deviation	Cause	Consequence	Safeguards	Mitigated Risk Ranking	Comments	Recommendations
				RR		
No/Less Flow	Valve closed downstream of MP-106	Pumps MP-106A/B shut off. MV-201 will fill up with amine, overflowing to the Stripper T-103. Rich Amine's low temperature will upset Stripper performance. Stripper amine loading will increase. Loose flow into the Absorber T-101, loosing heat exchange in ME-103A/B. No further consequences identified.	L and LL liquid level alarms from LI0426A/B, and LIC0440A/B will close the control valves upstream of the Absorber T-101. L and LL flow alarms from FIC0418A/B.	Risk is fully mitigated.		
No/Less Flow	No steam flow to the Heat Exchanger ME-109	Reduces flash gas into Stripper T-103, reducing stripping in the Stripper, increasing lean amine loading. No further consequences identified.				
No/Less Flow	Valve close upstream of ME-103A/B on Rich Amine	Flash vapor to the Stripper T-103 stops, causing level in MV-201 to drop and pumps MP-106A/B will run dry, leading to potential damage to pumps and loss of containment and environmental impact. Temperature of lean amine returning to the Absorber will increase. Reduction of cooling in the compression system, causing seal damage and leakage, and drive compressor temperatures above design conditions.	L and LL liquid level alarms from LI0426A/B, and LIC0440A/B will close the control valves upstream of the Absorber T-101. L and LL flow alarms from FIC0418A/B.	Risk is fully mitigated.		
No/Less Flow	Valve close upstream of ME-109 on Rich Amine	Flash vapor to the stripper reduces flow, and semi-lean amine flow increases slightly, temperature in flash drum drops, causing minor upset to Stripper T-103 and Absorber T-101. Temperature increases to saturation temperature of the steam which is within design conditions. Long term impact would be amine degradation. No further consequences identified.				
More Flow	FV0416 failing fully open	MV-201 will fill up with amine, overflowing to the Stripper T-103. Rich Amine's low temperature will upset Stripper performance. Stripper amine level will increase. No further consequences identified.				
More Flow	Increased Steam Flow	No consequences identified.				

Deviation	Cause	Consequence	Safeguards	Mitigated Risk Ranking	Comments	Recommendations
				RR		
	LV0440A fails fully open	Level in MV-201 will drop until pumps MP-106A/B run dry, leading to potential damage to pumps and loss of containment and environmental impact.	L and LL liquid level alarms from LI0426A/B, and LIC0440A/B will close the control valves upstream of the Absorber T-101. L and LL flow alarms from FIC0418A/B.	Risk fully mitigated.		
Reverse Flow	No causes identified					
Higher Temperature	TV0410 fails fully close	Duty on ME-107 will increase, resulting in high temperature rich amine to ME-109, ceasing condesing steam, resulting in lack of compressor stage discharge cooling. Reduction of cooling in the compression system, will cause seal damage and leakage, and drive compressor temperatures above design conditions. Rich amine entering MV-201 will increase slightly. No further consequnces identified.	TI0414 provides high temperature alarm.	Risk is fully mitigated.		
Lower Temperature	TV0410 fails fully open	Temperature of rich amine will decrease sightly, reducing the quantity of flash gas entering the Stripper T-103 and Stripper performance will marginally reduce. No further consequences identified.				
Higher Pressure	V-131 and V-123 are fully closed around ME-109	Rich amine is blocked in ME-109. Potential for overheating rich amine leading to thermal expansion, damage to the heat exchanger, and release of rich amine to the environment.	Thermal relief valves PSV-0908.	Risk is fully mitigated.		
Lower Pressure	Steam side inlet and outlet valves close around ME-109	Steam condenses producing full vacuum. Potential for rupture of exchanger.	ME-109 is designed for full vacuum.	Risk is fully mitigated.		Consider full vacuum scenario for steam system and systems containing water vapor in the plant design.
Higher Level	FV0416 failing fully open	MV-201 will fill up with amine, overflowing to the Stripper T-103. Rich Amine's low temperature will upset Stripper performance. Stripper amine level will increase. No further consequences identified.				

Deviation	Cause	Consequence	Safeguards	Mitigated Risk Ranking	Comments	Recommendations
				RR		
Higher Level	No flow from MV-201 due to failure of MP-106	MV-201 will fill up with amine, overflowing to the Stripper T-103. Rich Amine's low temperature will upset Stripper performance. Stripper amine level will increase. Loose flow into the Absorber T-101, loosing heat exchange in ME-103A/B. No further consequences identified.				
Lower Level	No flow into Semi-Lean Flash Drum MV-201 due to closure of FV0416	Flash vapor to the Stripper T-103 stops, causing level in MV-201 to drop and pumps MP-106A/B will run dry, leading to potential damage to pumps and loss of containment and environmental impact. Temperature of lean amine returning to the Absorber will increase. Reduction of cooling in the compression system, causing seal damage and leakage, and drive compressor temperatures above design conditions.	L and LL liquid level alarms from LI0426A/B, and LIC0440A/B will close the control valves upstream of the Absorber T-101. L and LL flow alarms from FIC0418A/B.	Risk fully mitigated.		
Change in Composition	Tube Rupture at Flash Feed Heater, ME-109	Rich Amine will leak into LP condensate stream returning back to the Power Plant. Potential uncontrolled release of amine.	H and HH Conductivity alarm AI1200 [SC-00001]. H will suggest operator to divert contaminated condensate to drain with quench and HH to shut down Carbon Capture Plant to limit production of contaminated condensate.	Risk fully mitigated.		Ensure ME-109 is welded construction.

Node 4: Lean Amine from Stripper Bottoms
Node Intent: To supply hot lean amine to the reclaimer and cold lean amine to the absorber
PFDs: CN-00005/4/3/1/2
P&IDs: CN-00120/170/100/81/80/10

Deviation	Cause	Consequence	Safeguards	Mitigated Risk Ranking	Comments	Recommendations
				RR		
No/Less Flow	MP-105 fails	Amine level increases in the stripper. The discharge of the reboiler will affect the thermosyphon reboiler. Potential to flood the bottom of the stripper. The lean amine flow to the absorber stops reducing CO2 removal and also rich amine will drop off. CO2 production to the compressor will decline.	H, HH, HHH liquid level alarm LIT-0620 A/B/C. Standby Pump MP-105 will start automatically.	Risk Fully Mitigated		Consider adding Low flow alarm to FIT-0508A/B downstream of MP-105 A/B and to FIT-0530A/B at the absorbers.
No/Less Flow	Filter MF-105 plugging	Slowly, the amine level increases in the stripper. The discharge of the reboiler will affect the thermosyphon reboiler. Potential to flood the bottom of the stripper. The lean amine flow to the absorber stops reducing CO2 removal and also rich amine will drop off. CO2 production to the compressor will decline.	H, HH, HHH liquid level alarm LIT-0620 A/B/C. H pressure differitial alarm PDIT-0512A/B	Risk Fully Mitigated		
No/Less Flow	Any valve upstream of MP-105 is closed	Amine level increases in the stripper. The discharge of the reboiler will affect the thermosyphon reboiler. Potential to flood the bottom of the stripper. The lean amine flow to the absorber stops reducing CO2 removal and also rich amine will drop off. CO2 production to the compressor will decline. The pump MP-105 will run dry with potential damage. Potential seal failure and the release of hot lean amine that will flash off due to high temperature. Potential environmental impact and fire. Potential for Hot liquid spraying on personel causing injury.	H, HH, HHH liquid level alarm LIT-0620 A/B/C. The minimum flow loop will fully open and recirculate back to the stripper. Piping and equipment downstream is designed for pump shut off pressure up to V-001 and V-003 located next to the absorbers.	C2 [Safety]		Ensure, HV-0501 fail close is linked with tripping of pump MP-105 in order to protect the pump. Consider making vavle V-165 at the bottom of the stripper locked open.

Deviation	Cause	Consequence	Safeguards	Mitigated Risk Ranking	Comments	Recommendations
				RR		
No/Less Flow	Any valve downstream of MP-105 is closed	Amine level increases in the stripper. The discharge of the reboiler will affect the thermosyphon reboiler. Potential to flood the bottom of the stripper. The lean amine flow to the absorber stops reducing CO2 removal and also rich amine will drop off. CO2 production to the compressor will decline. The pump MP-105 will deadhead causing overheating and potential damage. Potential seal failure and the release of hot lean amine that will flash off due to high temperature. Potential environmental impact and fire. Potential for Hot liquid spraying on personel causing injury.	H, HH, HHH liquid level alarm LIT-0620 A/B/C. The minimum flow loop will fully open and recirculate back to the stripper. Piping and equipment downstream is designed for pump shut off pressure up to V-001 and V-003 located next to the absorbers.	C2 [Safety]		
No/Less Flow	Minimium control valve FV-0508 A/B fail fully open	Less amine flow to the absorber and less CO2 removal. Potential for Pump runout causing cavitation and pump damage overtime.	CO2 master will measure insufficient lean amine flow through FIT-0530A.	Risk Fully Mitigated	L flow alarm already recommended to be added for FIT-0530A.	
More Flow	Control Valve FV-0503 A fails fully open	Liquid level in stripper bottom reduces. The pump MP-105 will run dry with potential damage. Potential seal failure and the release of hot lean amine that will flash off due to high temperature. Potential environmental impact and fire. Potential for Hot liquid spraying on personel causing injury. Potentially flooding the bottom beds of absorbers. Potentially restrict flue gas through the absorber. Potentially backing up pressure to the flue gas and therefore blowers and gas turbines.	L, LL, LLL liquid level alarm LIT-0620 A/B/C will trip the pump MP-105. H pressure differential alarm PDIT-0104/0106. H pressure alarm PIT-0006 A/B.	C2 [Safety]		

Deviation	Cause	Consequence	Safeguards	Mitigated Risk Ranking RR	Comments	Recommendations
Reverse Flow	The pump MP-105 A or B stops	Potential for wash water , process water, and lean amine fill flowing backwards to the stripper by the minimum flow. The liquid level increases in the stripper. The discharge of the reboiler will affect the thermosyphon reboiler. Potential to flood the bottom of the stripper. The lean amine flow to the absorber stops reducing CO2 removal and also rich amine will drop off. CO2 production to the compressor will decline.	V-198 A/B at the pump discharge. The standby pump will start reestabliishing the correct flow	Risk Fully Mitigated		
Higher Temperature	Lack of cooling water at ME-102	Higher temperature lean amine to the absober reducing the CO2 recovery. Eventually the rich amine temperature will increase leading to rich amine pump cavitation. Potentially increasing amine emmissions from absorber.	H temperature alarm TI-0520 and TI-0528	Risk Fully Mitigated		
Lower Temperature	Plate and frame heat exchanger blocked in at high temperature	Heat exchanger cools liquid contracts creating vacuum. Potential damage to heat exchanger and loss of containment.				Consider full vacuum design for plate and frame heat exchangers.
Higher Pressure	Any valve downstream of MP-105 is closed	The pressure downstream of the pump will increase, pump MP-105 will deadhead causing overheating and potential damage. Potential seal failure and the release of hot lean amine that will flash off due to high temperature. Potential environmental impact and fire. Potential for Hot liquid spraying on personel causing injury.	The minimum flow loop will fully open and recirculate back to the stripper. Piping and equipment downstream is designed for pump shut off pressure up to V-001 and V-003 located next to the absorbers.	C2 [Safety]		
Higher Pressure	V-141 and V-126 are fully closed around ME-107	Lean amine is blocked in ME-107. Potential for overheating lean amine leading to thermal expansion, damage to the heat exchanger, and release of lean amine to the environment.	Thermal relief valves PSV-0910.	Risk Fully Mitigated	Applies to ME-102/108/109	
Lower Pressure	No credible causes identified					
Change in Composition	No significant causes identified					

Node 5: CO2 Compression and Drying
Node Intent: To compress CO2 to dense phase and dry it to comply to pipeline specification before pumping into pipeline
PFDs: CN-00005/QG-00001/2
P&IDs: CN-00140/QG-00010/20/30/40/50/60/70/80/90/100/110/120

Deviation	Cause	Consequence	Safeguards	Mitigated Risk Ranking RR	Comments	Recommendations
No/Less Flow	PV0690 A fails close or HV0714 fails close	PV0690 B will open to compensate venting CO2 to the stack of the absorber and then to the atmosphere. Potential environmental impact. The compressor will surge resulting in possible compressor damage and loss of containment. Surge drum pressure will drop as dense phase CO2 is pumped out into pipeline leading to potential pump cavitation, damage, release of high pressure CO2. Potential fatalities.	PV0690 B opening will protect the upstream system in Node 2. Surge trip on the compressor. Compressor trip will stop pump MP-108 A/B and also closes CO2 product shutoff valve HV2558. Also closes CO2 product control valve FV2561. And closes CO2 compressor discharge shutoff valve HV2516.	E3[Env]	P&ID CN-00140 will have to change from QC-00010 to CN-00020	The allowable duration of CO2 venting must be defined in the environmental permit.
No/Less Flow	Compressor Stops	PV0690 B will open to compensate venting CO2 to the stack of the absorber and then to the atmosphere. Potential environmental impact. Surge drum pressure will drop as dense phase CO2 is pumped out into pipeline leading to potential pump cavitation, damage, release of high pressure CO2. Potential fatalities.	PV0690 B opening will protect the upstream system in Node 2. Compressor status alarm in the control room. Compressor trip will stop pump MP-108 A/B and also closes CO2 product shutoff valve HV2558. Also closes CO2 product control valve FV2561. And closes CO2 compressor discharge shutoff valve HV2516.	E3[Env]		Ensure, that MP-108 A/B are provided with low suction pressure shutdown.
No/Less Flow	PV0690 B fails open	Venting CO2 to the stack of the absorber and then to the atmosphere. Potential environmental impact. The compressor will surge resulting in possible compressor damage and loss of containment. Surge drum pressure will drop as dense phase CO2 is pumped out into pipeline leading to potential pump cavitation, damage, release of high pressure CO2. Potential fatalities.	Surge trip on the compressor. Compressor trip will stop pump MP-108 A/B and also closes CO2 product shutoff valve HV2558. Also closes CO2 product control valve FV2561. And closes CO2 compressor discharge shutoff valve HV2516.	E3[Env]		
No/Less Flow	LV0704 fails close	Builds up liquid level in MV-203 leading to carry over to the compressor. Potential compressor damage and fatalities via rotor failure and ejecting high velocity metal fragments through compressor casing.	None identified	E4[Safety]		Consider designing the Level protection for MV-203 with additional IPL's and therefore shutdown the compressor from the ESD system. This recommendation applies to all CO2 compression suction drums.

Deviation	Cause	Consequence	Safeguards	Mitigated Risk Ranking	Comments	Recommendations
				RR		
No/Less Flow	No flow of boiler feed water to steam generator or LV0742 fails close or PV0744 fails close	Loss of cooling in ME-112 resulting in high temperature CO2 to ME-113. Causing hotter CO2 to exit ME-113 resulting in hotter discharge temperature out of second stage with possible seal damage and CO2 release. Boiler feed water is blocked in overheating leading to higher pressure. Potential shell rupture. Potential fatalities.	(2oo3)TAHH0754 will trip the compressor. H temperature alarm TI1636 PSV0904 L flow alarm FI2750 L level alarm LI0742	D4[Safety]		Consider adding HH pressure on the steam side to trip the compressor
No/Less Flow	LC0746 fails close or LV0776 fails close	Similar to LV0704 failing close.			LC-0746 should be LV-0746	
No/Less Flow	FV0732 fails close on first stage antisurge line	The compressor will surge resulting in possible compressor damage and loss of containment. Potential Fatalities.	Surge trip on the compressor. Compressor trip will stop pump MP-108 A/B and also closes CO2 product shutoff valve HV2558. Also closes CO2 product control valve FV2561. And closes CO2 compressor discharge shutoff valve HV2516.		Risk Fully Mitigated	
No/Less Flow	FV0732 fails open on first stage antisurge line	Second stage compressor loses flow and goes into surge with potential damage and fatalities.	Surge trip on the compressor. Compressor trip will stop pump MP-108 A/B and also closes CO2 product shutoff valve HV2558. Also closes CO2 product control valve FV2561. And closes CO2 compressor discharge shutoff valve HV2516.		Risk Fully Mitigated	
No/Less Flow	Malfunction of drying package [e.g. valves close or plug in filter]	No or less flow through the dryer. Reduced or no flow through third stage of the compresor. Compressor surge and damage leading to loss of containment. Potential fatalities Surge drum pressure will drop as dense phase CO2 is pumped out into pipeline leading to potential pump cavitation, damage, release of high pressure CO2. Potential fatalities	Surge trip on the compressor. Compressor trip will stop pump MP-108 A/B and also closes CO2 product shutoff valve HV2558. Also closes CO2 product control valve FV2561. And closes CO2 compressor discharge shutoff valve HV2516. In addition, H pressure differential alarm PDI0778 and PDI0786 on the filters.		Risk Fully Mitigated	
No/Less Flow	MP-108 A/B stops	Reduced or no flow through third stage of the compresor. Compressor surge and damage leading to loss of containment. Potential fatalities Surge drum MV-106 will overpressure and potentially rupture. Potential fatalities.	PV2546 will open to relieve pressure to the absorber and released to the atmosphere. PSV0903 Surge trip on the compressor. Standby pump will start.	C4 [Safety]		Consider replacing the three level LIT2542 A/B/C with pressure transmitters to better manage this scenario.

Deviation	Cause	Consequence	Safeguards	Mitigated Risk Ranking	Comments	Recommendations
				RR		
No/Less Flow	PV2546 fails close	The drum pressure will increase leading to the increase in pressure of the whole system. All compressor stages will work at higher pressure potential damage/rupture and loss of containment. Potential Fatalities.	All PSV's are sized for this scenario. H pressure alarm on all stages of compressor. PV0690 B will open releasing to the top of the absorber.	C4 [Safety]		
No/Less Flow	FV2561 or HV2558 fails close	CO2 will not be pumped to the pipeline. Pump will run against a deadend causing potential pump seal failure and pressurizing system with potential rupture. Reduced or no flow through third stage of the compresor. Compressor surge and damage leading to loss of containment. Potential fatalities Surge drum MV-106 will overpressure and potentially rupture. Potential fatalities	ME-118 designed for 245 bar. Pumps will work on minimum flow. L, LL flow alarm at pump discharge FIC2556 A/B. PV2546 will open to relieve pressure to the absorber and released to the atmosphere. PSV0903 Surge trip on the compressor.		Risk Fully Mitigated	Consider manual shutdown
More Flow	FV2513 fails fully open	Second stage pressure will increase, overpressuring the compression system and potentially leading to rupture, CO2 release, environmental impact, and/or fatalities.	PSV0902 on MV-105.H pressure alarm on PI2506.	D4 [Safety]		
Reverse Flow	No causes identified.					
Lower Pressure	Described in No/Less Flow, Node 6.					
Higher Pressure	Blocked compressor outlet due to failure of HV2516 fully closed, or any valve downstream closed.	Pressure of CO2 stream will increase, leading to potential compressor and/or pipe rupture, CO2 release, fatalities, and environmental impact. 3rd stage steam generator will run dry, pressure in surge drum will decrease, CO2 phase will change into liquid and vapor leading to cavitation in pump suction MP-108A/B, pump damage, and release of CO2 to atmosphere, fatalities, and environmental impact.	H pressure alarm on PI2506. Anti-surge will protect the compressor.	F4 [Safety]		Consider reviewing the location of HV2516 with regard to the nearest location of PSVs to protect for this scenario.

Deviation	Cause	Consequence	Safeguards	Mitigated Risk Ranking	Comments	Recommendations
				RR		
Higher Pressure	Tube rupture in ME-116 and/or ME-117	High pressure CO2 entering the cooling water or BFW HX's, can lead to pipe rupture with release of CO2 to the atmosphere and potential fatalities.	PSV0906 on ME-116 set at 86barg. PSV0909 on cooling water return [WL-00003].	D4 [Safety]		Consider transient analysis in CW and BFW systems to assess lower pressure and the adequate piping pressure and support. Recommendation applies to all similar Heat Exchangers.
Higher Pressure	Additional scenarios are described in No/Less Flow, Node 6.					
Lower Temperature	No causes identified.					
Higher Temperature	Manual valve closed in error V124 or V038	Loss of cooling to ME-117 will increase the temperature of CO2 stream, making it less dense and above the pipeline design temperature. Potential pump damage and cavitation, leading to CO2 release to atmosphere, fatalities, and environmental impact.	H temperature alarm on TI1616. H temperature alarm on TI2562.	D4 [Safety]		
Higher Temperature	Scenario described above applies to all heat exchangers in compression system.					
Lower Level	LV0704 failing fully open	Potentially drain the drum empty to floor drain causing CO2 to enter the wastewater sump and be released to atmosphere resulting in potential fatalities and environmental impact.	None identified	E4[Safety]	Check if drain to XW-001 is the correct drain number.	Consider designing the Level protection for MV-203 with additional IPL's and therefore shutdown the compressor from the ESD system. This recommendation applies to all CO2 compression suction drums.
Higher Level	All compressor suction drums have similar design as MV-203 and high level scenario was described above for No/Less Flow by LV0704 failing close.	No major consequences identified.				
Change in Composition	No major causes identified.					

Node 6: General
Node Intent: To cover the entire CCU Plant.
PFDs: All
P&IDs: All

Deviation	Cause	Consequence	Safeguards	Mitigated Risk Ranking	Comments	Recommendations
				RR		
Startup/Shutdown	Repositioning of HRSG stack dampers for smooth flue gas diversion to Carbon Capture plant	Exceeding GTG(s) backpressure limits, due to high exhaust pressure. Potential damage to GTG(s), leading to uncontained failure of GTG turbine last stage and/or diffuser section. Potential injuries and/or fatalities if failure is uncontained.	GTG will be proteced by H pressure trip. Dampers will be interlocked so flue gas path is always open.	Risk is fully mitigated.		
Startup/Shutdown	L flue gas flow from Power Plant during Startup or unexpected shutdown of GTG while CCU is in operation	Reverse flow through HRSG stack will create a potential for air ingress to the Absorbers. Amine quality will reduce in the long term. No major consequences identified.	AIT0026 will monitor Oxygen level in the flue gas.	Risk is fully mitigated.		
Startup/Shutdown	Mismatch of HRSG stack damper, of dampers in flue gas supply line to CCU FD912, and/or of blower inlet dampers PV0035, and/or blower speed not controlled to keep HRSG outlet pressure on set point, driving pressure to lower than designed.	GTG(s) exhaust pressure is lower than design, resulting in higher velocities of gas through GTG turbine section, leading to vibration, potential damage to the turbine.	L pressure alarm from PI902C and PI915C	Risk is fully mitigated.		Flow from individual units and the total flow are being measured. Ensure that any mismatch is alarmed.
Power Failure	GTG trips when power is operating on one GTG	Power loss to the CCU; pumps, compressor, and blowers will trip, and valves will go to fail safe positions.	Diesel generator will allow safe shutdown of CCU. CCU will have a UPS.	Risk is fully mitigated.		
Loss of Instrument Air	No causes identified.				2x100% Air compressors	
Loss of Cooling Water	Failure of one of the Power Plant circulating water pumps	Reduced cooling. No major consequences identified.	2x50% circulating water pumps in the Power Plant	Risk is fully mitigated.		

Document List

Document Number	Title
26301-000-3YD-M18G-00001	Process Description
26301-000-M5-BA-00001	Process Flow Diagram - Blower and Quench Section
26301-000-M5-CN-00001	Process Flow Diagram - Absorber T-101
26301-000-M5-CN-00002	Process Flow Diagram - Absorber T-102
26301-000-M5-CN-00003	Process Flow Diagram - Lean Amine Cooling Sheet 1 of 2
26301-000-M5-CN-00004	Process Flow Diagram - Lean Amine Cooling Sheet 2 of 2
26301-000-M5-CN-00005	Process Flow Diagram - Stripper
26301-000-M5-CN-00006	Process Flow Diagram - Amine Reclaimer
26301-000-M5-CY-00001	Process Flow Diagram - Fresh and Lean Amine Storage
26301-000-M5-QG-00001	Process Flow Diagram - Compression & Drying Section - Sheet 1 of 2
26301-000-M5-QG-00002	Process Flow Diagram - Compression & Drying Section - Sheet 2 of 2
26301-000-M5-SC-00001	Process Flow Diagram Condensate, Steam and BFW Water Distribution Systems
26301-000-M5-WL-00001	Process Flow Diagram - Cooling Water System
26301-000-M5J-YA-00001	PFD Symbols and Legends
26301-000-M6-AB-00001	Piping & Instrument Diagram LP Steam System
26301-000-M6-AB-00002	Piping & Instrument Diagram LP Steam System
26301-000-M6-AB-00003	Piping & Instrument Diagram MP Steam System
26301-000-M6-AB-00004	Piping & Instrument Diagram LP Steam Supply to CC
26301-000-M6-AB-00005	Piping & Instrument Diagram MP Steam Supply to CC
26301-000-M6-BA-00001	Piping & Instrument Diagram Flue Gas System
26301-000-M6-BA-00002	Piping & Instrument Diagram Flue Gas System
26301-000-M6-BA-00003	Piping & Instrument Diagram Flue Gas System
26301-000-M6-CN-00010	Piping & Instrument Diagram CO2 Absorber T-101 (Amine Section)
26301-000-M6-CN-00020	Piping & Instrument Diagram CO2 Absorber T-101 (Wash Water Cooling Section)
26301-000-M6-CN-00030	Piping & Instrument Diagram Absorber 1 Wash Water Cooling System
26301-000-M6-CN-00040	Piping & Instrument Diagram Absorber 1 Rich Amine Pumps
26301-000-M6-CN-00080	Piping & Instrument Diagram Lean Amine Cooling System
26301-000-M6-CN-00081	Piping & Instrument Diagram Lean Amine/Rich Amine Heat Exchangers
26301-000-M6-CN-00085	Piping & Instrument Diagram Semi-Lean Amine/Rich Amine Heat Exchanger
26301-000-M6-CN-00100	Piping & Instrument Diagram Flash Feed Heaters
26301-000-M6-CN-00110	Piping & Instrument Diagram Semi-Lean Amine Flash System
26301-000-M6-CN-00120	Piping & Instrument Diagram Amine Stripper (Packed Section)
26301-000-M6-CN-00130	Piping & Instrument Diagram Amine Stripper (Trayed Section)
26301-000-M6-CN-00140	Piping & Instrument Diagram Amine Stripper (Reflux Section)
26301-000-M6-CN-00150	Piping & Instrument Diagram Stripper Reboilers
26301-000-M6-CN-00170	Piping & Instrument Diagram Lean Amine Pump
26301-000-M6-CY-00010	Piping & Instrument Diagram Rich and Lean Amine Storage
26301-000-M6-PA-00001	Piping & Instrument Diagram Compressed Air System
26301-000-M6-PA-00002	Piping & Instrument Diagram Compressed Air System
26301-000-M6-PF-00001	Piping & Instrument Diagram Fire Protection System
26301-000-M6-PG-00001	Piping & Instrument Diagram Nitrogen Gas System
26301-000-M6-PW-00001	Piping & Instrument Diagram Potable Water System
26301-000-M6-QG-00010	Piping & Instrument Diagram CO2 Compressor Suction Drum
26301-000-M6-QG-00020	Piping & Instrument Diagram CO2 Compressor 1st Stage
26301-000-M6-QG-00030	Piping & Instrument Diagram CO2 Compressor 1st Stage Steam Generator & Intercooler
26301-000-M6-QG-00040	Piping & Instrument Diagram CO2 Compressor 1st Stage Interstage Knock-Out Drum

Document Number	Title
26301-000-M6-QG-00050	Piping & Instrument Diagram CO2 Compressor 2nd Stage
26301-000-M6-QG-00060	Piping & Instrument Diagram CO2 Compressor 2nd Stage Steam Generator & Intercooler
26301-000-M6-QG-00070	Piping & Instrument Diagram CO2 Compressor 2nd Stage Interstage Knock-Out Drum
26301-000-M6-QG-00080	Piping & Instrument Diagram CO2 Drying Package
26301-000-M6-QG-00090	Piping & Instrument Diagram CO2 Compressor 3rd Stage Interstage
26301-000-M6-QG-00100	Piping & Instrument Diagram CO2 Compressor 3rd Stage Steam Generator & Intercooler
26301-000-M6-QG-00110	Piping & Instrument Diagram CO2 Surge Drum & Product Send Out Pump
25474-000-M6-QG-00120	Piping & Instrument Diagram CO2 Cooler and Export Pipeline
26301-000-M6-SC-00001	Piping & Instrument Diagram LP Condensate System
26301-000-M6-WL-00002	Piping & Instrument Diagram Cooling Water Supply System
26301-000-M6-WL-00003	Piping & Instrument Diagram Cooling Water Return System
26301-000-M6-WP-00010	Piping & Instrument Diagram Absorber Makeup Water Pumps
26301-000-M6-WR-00001	Piping & Instrument Diagram Raw Water System
26301-000-M6-XW-00001	Piping & Instrument Diagram Amine Waste System
26301-000-M6-XW-00002	Piping & Instrument Diagram Waste Water System
26301-000-M6-XW-00003	Piping & Instrument Diagram Waste Spray Water System
26301-000-M6J-YA-00001	Piping & Instrument Diagram Symbols and Legends
26301-000-M6J-YA-00002	Piping & Instrument Diagram Symbols and Legends
26301-000-M6J-YA-00003	Piping & Instrument Diagram Symbols and Legends
26301-000-M6J-YA-00004	Piping & Instrument Diagram Symbols and Legends
26301-000-M6J-YA-00005	Piping & Instrument Diagram Symbols and Legends
26301-000-J4-JD-00001	Cause & Effect Diagram

CONSEQUENCE CATEGORY			CONSEQUENCE / IMPACT					
Safety/Health (impact on work force)			Single first aid	Serious Injury – temporary	Disabling Injury – permanent	1-2 fatalities or multiple personnel disabilities	3 - 10 fatalities	> 10 fatalities
Safety/Health (impact on public)			No impact	Single first aid	Severe Injury – temporary	Disabling Injury - permanent	1-2 fatalities or multiple disabilities	≥ 3 fatalities
Environmental (impact to the natural environment)			No impact	Minor impact, fully contained, readily mitigated.	Short term impact, confined to site	Significant impact but contained on site	Severe – offsite impact; media interest	Long term offsite impact; significant media interest
Property Damage/Financial loss			< $ 100,000	$100,000 to $1million	$1 million to $10million	$10 million to $100 million	$100million to $1billion	> $1 billion
LIKELIHOOD		**Annual Frequency**	**(1) NEGLIGIBLE**	**(2) MINOR**	**(3) MODERATE**	**(4) MAJOR**	**(5) SEVERE**	**(6) CATASTROPHIC**
(F) FREQUENT	Expected to occur several times within the facility lifetime.	10^{-1}	**IPLs =0**	**IPLs =1**	**IPLs =2**	**IPLs =3**	**IPLs =4**	**Not Acceptable**
(E) OCCASIONAL	Expected to occur once or twice during the facility lifetime.	10^{-2}	**IPLs =0**	**IPLs =0**	**IPLs =1**	**IPLs =2**	**IPLs =3**	**IPLs =4**
(D) POSSIBLE	Might occur once in ten similar facility lifetimes	10^{-3}	**IPLs =0**	**IPLs =0**	**IPLs =0**	**IPLs =1**	**IPLs =2**	**IPLs =3**
(C) UNLIKELY	Known to have occurred, but unlikely within ten facility lifetimes.	10^{-4}	**IPLs =0**	**IPLs =0**	**IPLs =0**	**IPLs =0**	**IPLs =1**	**IPLs =2**
(B) VERY UNLIKELY	Similar event has occurred in OG&C industry.	10^{-5}	**IPLs =0**	**IPLs =0**	**IPLs =0**	**IPLs =0**	**IPLs =0**	**IPLs =1**
(A) RARE	Has not yet occurred in OG&C industry	10^{-6}	**IPLs =0**	**IPLs =0**	**IPLs =0**	**IPLs =0**	**IPLs =0**	**IPLs =0**

NOTES:
Numbers in the matrix indicates the number of required IPLs to reduce risk to acceptable levels.

When IPLs = 0 there is no need for additional IPLs if safeguards are reasonable and operator has a functional safety management system in place.

Appendix P: SAS Architecture Diagram

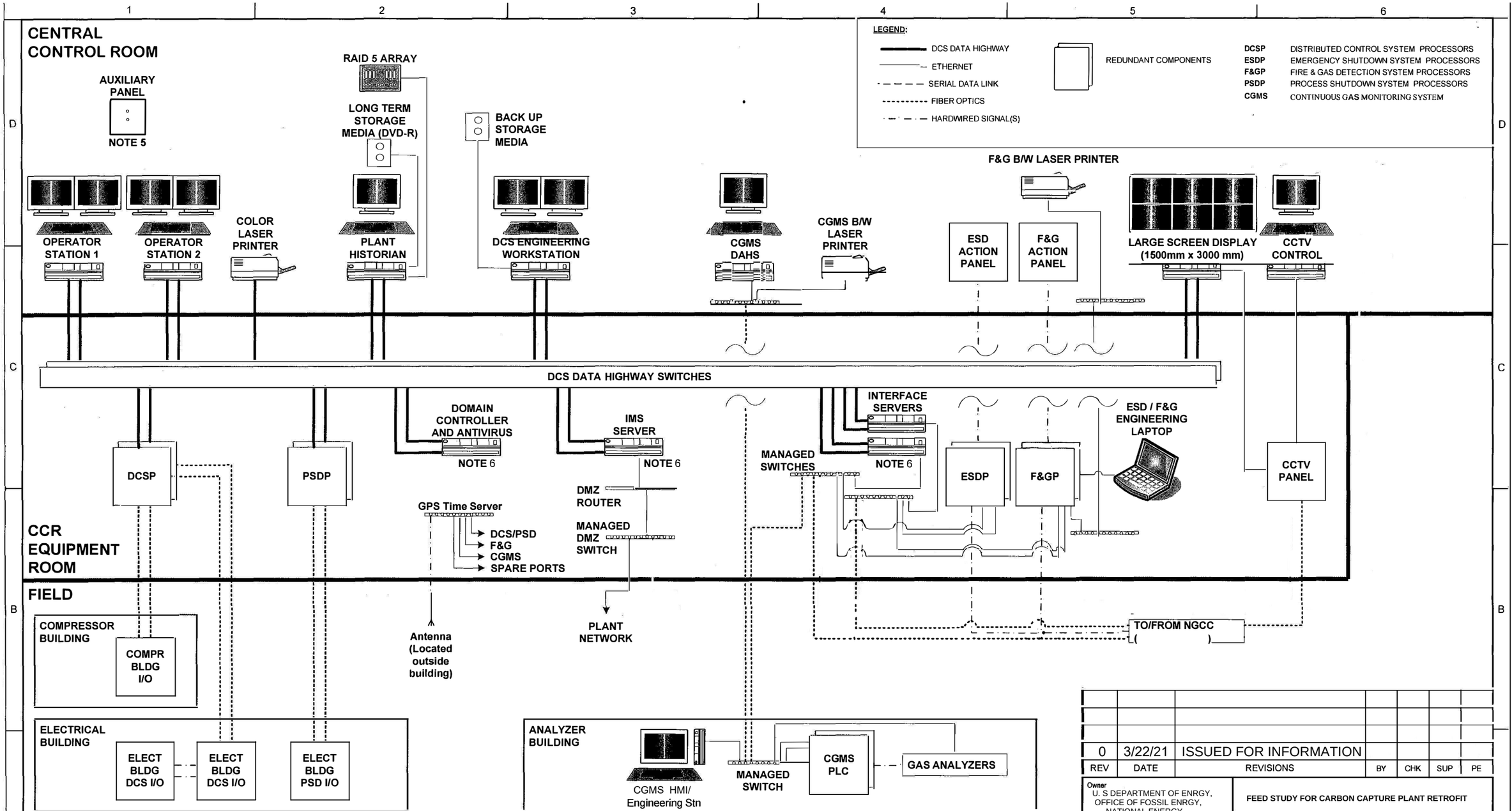

NOTES:

1. THE SYSTEM CONFIGURATION IS CONCEPTUAL AND MAY NOT BE EXACTLY AS SHOWN. DEPENDING ON DCS VENDOR SELECTION SOME DETAILS MAY CHANGE.
2. THIS DRAWING IS NOT INTENDED TO SPECIFY THE DETAILED DESIGN OF CABLE CONNECTIONS OR CABLE ENTRY.
3. ROUTING OF DATA HIGHWAY MAY NOT BE EXACTLY AS SHOWN.
4. NOT ALL NETWORKING SWITCHES ARE SHOWN. TO BE PROVIDED BY APPLICABLE VENDORS AS REQUIRED.
5. CONTAINS "ESD" PUSH BUTTONS.
6. COMMON SERVER INTERFACE FROM ENGINEERING STATION OR HISTORIAN STATION FOR THE DOMAIN CONTROLLER, INTERFACE, AND IMS SERVERS VIA REMOTE LOGIN OR KVM SWITCHING.

REV	DATE	REVISIONS	BY	CHK	SUP	PE
0	3/22/21	ISSUED FOR INFORMATION				

Owner
U. S DEPARTMENT OF ENRGY, OFFICE OF FOSSIL ENRGY, NATIONAL ENERGY TECHNOLOGY LABORATORY

FEED STUDY FOR CARBON CAPTURE PLANT RETROFIT

ARCHITECTURE DIAGRAM

CONTRACTOR:
BECHTEL NATIONAL INC

Sheet Size A3 | Scale N.T.S.

JOB NO.	DRAWING NO.	REV.

Appendix Q: Fire Cause and Effect Diagram

BECHTEL NATIONAL Inc.

FEED STUDY FOR CARBON CAPTURE PLANT RETROFIT

FIRE CAUSE & EFFECT DIAGRAM

Acknowledgment: This material is based upon work supported by the Department of Energy Award Number DE-FE0031848.

Disclaimer: This report was prepared as an account of work sponsored by an agency of the United States Government. Neither the United States Government nor any agency thereof, nor any of their employees, makes any warranty, express or implied, or assumes any legal liability or responsibility for the accuracy, completeness, or usefulness of any information, apparatus, product, or process disclosed, or represents that its use would not infringe privately owned rights. Reference herein to any specific commercial product, process, or service by trade name, trademark, manufacturer, or otherwise does not necessarily constitute or imply its endorsement, recommendation, or favoring by the United States Government or any agency thereof. The views and opinions of authors expressed herein do not necessarily state or reflect those of the United States Government or any agency thereof.

Rev	Date	Description	BY	CHKD	APPD				Document Number: BECHTEL: 26301-000-J4-JD-00002 OWNER : NOT USED		
									Rev	Job Number	Page
0	19-Feb-21	ISSUED FOR INFORMATION	MJC	VS	MJC/VS				0	26301	1 of 2

GENERAL NOTES:

1. This document is to be developed further during detailed engineering based on additional control logic details e.g. vendor information.

2. Non-essential electrical power sources such as welding and socket outlets shall be tripped to prevent the ignition probability of flammable liquids and gas leaks via ESD system's low gas alarm in the area.

3. In the event of both combustible gas detection and CO2 detection, these activations will be disabled.

4. Fusible Link activation of compressor area sprinkler system.

CAUSE	ALARM POINT AND VOTING	EFFECT
Open Area Gas Dectection		
CO2 Point Gas Detector — low	5000 ppm 1ooN	
CO2 Point Gas Detector — high	15000 ppm 1ooN	
NOx Point Gas Detector — low	0.6 ppm 1ooN	
NOx Point Gas Detector — high	1.8 ppm 1ooN	
Open Path Combustible Gas Detector— low	20% LEL 1ooN	
Open Path Combustible Gas Detector— high	30% LEL 1ooN	
Open Path Combustible Gas Detector— low	20% LEL 2ooN	
Combustible Gas Detector Point Source — low	20% LEL 1ooN	
Combustible Gas Detector Point Source — high	30% LEL 1ooN	
Combustible Gas Detector Point Source — low	20% LEL 2ooN	
Building Gas Detection		
CGMS Shelter HVAC Inlet Combustible Gas — low	20% LEL 2ooN	
CGMS Shelter CO2 Detector- Low (5000, ppm)	5000 ppm 1ooN	
CGMS Shelter CO2 Detector- High (15000, ppm)	15000 ppm 1ooN	
CGMS Shelter NOx Detector- Low (0.6 ppm)	0.6 ppm 1ooN	
CGMS Shelter NOx Detector- High (1.8 ppm)	1.8 ppm 1ooN	
CGMS Shelter CO Detector- Low (25 ppm)	25 ppm 1ooN	
CGMS Shelter CO Detector- High (35 ppm)	35 ppm 1ooN	
CGMS Shelter O2 Detector- Low (20.5%)	20.5% 1ooN	
CGMS Shelter O2 Detector- High (19.5%)	19.5% 1ooN	
Flue Gas Blower Building #1 Ventilation Inlet Combustible Gas — low	20% LEL 2ooN	
Flue Gas Blower Building #1 CO2 Detector- Low (5000, ppm)	5000 ppm 1ooN	
Flue Gas Blower Building #1 CO2 Detector- High (15000, ppm)	15000 ppm 1ooN	
Flue Gas Blower Building #1 NOx Detector- Low (0.6 ppm)	0.6 ppm 1ooN	
Flue Gas Blower Building #1 NOx Detector- High (1.8 ppm)	1.8 ppm 1ooN	
Flue Gas Blower Building #1 O2 Detector- Low (20.5%)	20.5% 1ooN	
Flue Gas Blower Building #1 O2 Detector- High (19.5%)	19.5% 1ooN	
Flue Gas Blower Building #2 Ventilation Inlet Combustible Gas — low	20% LEL 2ooN	
Flue Gas Blower Building #2 CO2 Detector- Low (5000, ppm)	5000 ppm 1ooN	
Flue Gas Blower Building #2 CO2 Detector- High (15000, ppm)	15000 ppm 1ooN	
Flue Gas Blower Building #2 NOx Detector- Low (0.6 ppm)	0.6 ppm 1ooN	
Flue Gas Blower Building #2 NOx Detector- High (1.8 ppm)	1.8 ppm 1ooN	
Flue Gas Blower Building #2 O2 Detector- Low (20.5%)	20.5% 1ooN	
Flue Gas Blower Building #2 O2 Detector- High (19.5%)	19.5% 1ooN	
Compressor Building (Compressor Area) Ventilation Inlet Combustible Gas — low	20% LEL 2ooN	
Compressor Building (Compressor Area) CO2 Detector- Low (5000, ppm)	5000 ppm 1ooN	
Compressor Building (Compressor Area) CO2 Detector- High (15000, ppm)	15000 ppm 1ooN	
Compressor Building (Analyzer Room) HVAC Inlet Combustible Gas — low	20% LEL 2ooN	
Compressor Building (Analyzer Room) CO2 Detector- Low (5000, ppm)	5000 ppm 1ooN	
Compressor Building (Analyzer Room) CO2 Detector- High (15000, ppm)	15000 ppm 1ooN	
Compressor Building (VFD Room) Ventilation Inlet Combustible Gas — low	20% LEL 2ooN	
Compressor Building (VFD Room) CO2 Detector- Low (5000, ppm)	5000 ppm 1ooN	
Compressor Building (VFD Room) CO2 Detector- High (15000, ppm)	15000 ppm 1ooN	
Compressor Building (Water Treatment Room) Ventilation Inlet Combustible Gas — low	20% LEL 2ooN	
Compressor Building (Water Treatment Room) CO2 Detector- Low (5000, ppm)	5000 ppm 1ooN	
Compressor Building (Water Treatment Room) CO2 Detector- High (15000, ppm)	15000 ppm 1ooN	
Control/Labs/Stores Building (CCR/Admin Area) HVAC Inlet Combustible Gas -Low	20% LEL 2ooN	
Control/Labs/Stores Building (Lab/Stores Area) Ventilation Inlet Combustible Gas -Low	20% LEL 2ooN	
Electrical Building HVAC Inlet Combustible Gas -Low	20% LEL 2ooN	
Battery Room Combustible Gas (Hydrogen)	20% LEL 2ooN	
Battery Room Combustible Gas (Hydrogen)	30% LEL 2ooN	
Flame AND Smoke Detection		
Flame Detector- Rich Amine Pumps (P-101 A/B, P-124 A/B)		
Flame Detector- Lean Amine Pumps (P-105 A/B)		
Flame Detector- Flash Drum Pumps (P-106 A/B)		
Flame Detector- Amine Makeup and Fill Waste Pumps (P-110 A/B, P-111 A/B)		
Flame Detector- Amine Waste Pumps (P-112 A/B)	2ooN	
Smoke Detection-Control/Lab/ Stores Building (CCR/Admin Area)	2ooN	
Smoke Detection-Control/Lab/ Stores Building (Lab/Stores Area)	2ooN	
Smoke Detection- Electrical Building (Low Voltage Room)	2ooN	
Smoke Detection- Electrical Building (Med Voltage Room)	2ooN	
Smoke Detection- Electrical Building (UPS/Battery Charger Room)	2ooN	
Smoke Detection- CGMS Shelter	2ooN	
Smoke Detection- Flue Gas Blower Building #1	2ooN	
Smoke Detection- Flue Gas Blower Building #2	2ooN	
Smoke Detection- Compressor Building (Compressor area)	2ooN	
Smoke Detection- Compressor Building (Analyzer area)	2ooN	
Smoke Detection- Compressor Building (VFD Room)	2ooN	
Smoke Detection- Lube Oil Storage Building	2ooN	
Smoke Detection- Diesel Generator Enclosure	1ooN	
ACTIVATIONS		
Manual Alarm Call Point (MRCP)		
Compressor Building Sprinkler System Waterflow		
Compressor Building Sprinkler Valve Not Open Switch		
Fire Water Supply Low Pressure (PIT-2000A, PIT-2000B)	1ooN	
Fire Alarm from Sherman NGCC Plant F&G System	1ooN	
Fire Alarm from PCC Plant F&G System	1ooN	
Fire Alarm from Storage (Panda) F&G System	1ooN	
Toxic Gas Alarm from Sherman NGCC Plant F&G System	1ooN	
Toxic Gas Alarm from PCC Plant F&G System	1ooN	
Toxic Gas Alarm from Storage (Panda) F&G System	1ooN	
Combustible Gas Alarm from Sherman NGCC Plant F&G System	1ooN	
Combustible Gas Alarm from PCC Plant F&G System	1ooN	
Combustible Gas Alarm from Storage (Panda) F&G System	1ooN	

| | AREA WIDE ALARMS | | |

Appendix R: Civil Drawings

Site Drainage Plan

- 26301-000-CD-0000-00001

Rough Grading Plan

- 26301-000-CG-0000-00001

Ductwork Foundation Plan W/Typical Sections and Details (Sheets 1-3)

- 26301-000-DB-0100-00001
- 26301-000-DB-0100-00002
- 26301-000-DB-0100-00003

CCC Plant Foundation Plan with Typical Sections and Details (Sheets 1-4)

- 26301-000-DB-0200-00001
- 26301-000-DB-0200-00002
- 26301-000-DB-0200-00003
- 26301-000-DB-0200-00004

Structural Steel Sheet Typical Sections and Details (Sheets 1-4)

- 26301-000-S0-0000-00001
- 26301-000-S0-0000-00002
- 26301-000-S0-0010-00003
- 26301-000-S0-0010-00004

Acknowledgment: This material is based upon work supported by the Department of Energy Award Number DE-FE0031948

Disclaimer: This report was prepared as an account of work sponsored by an agency of the United States Government. Neither the United States Government nor any agency thereof, nor any of their employees, makes any warranty, express or implied, or assumes any legal liability or responsibility for the accuracy, completeness, or usefulness of any information, apparatus, product, or process disclosed, or represents that its use would not infringe privately owned rights. Reference herein to any specific commercial product, process, or service by trade name, trademark, manufacturer, or otherwise does not necessarily constitute or imply its endorsement, recommendation, or favoring by the United States Government or any agency thereof. The views and opinions of authors expressed herein do not necessarily state or reflect those of the United States Government or any agency thereof.

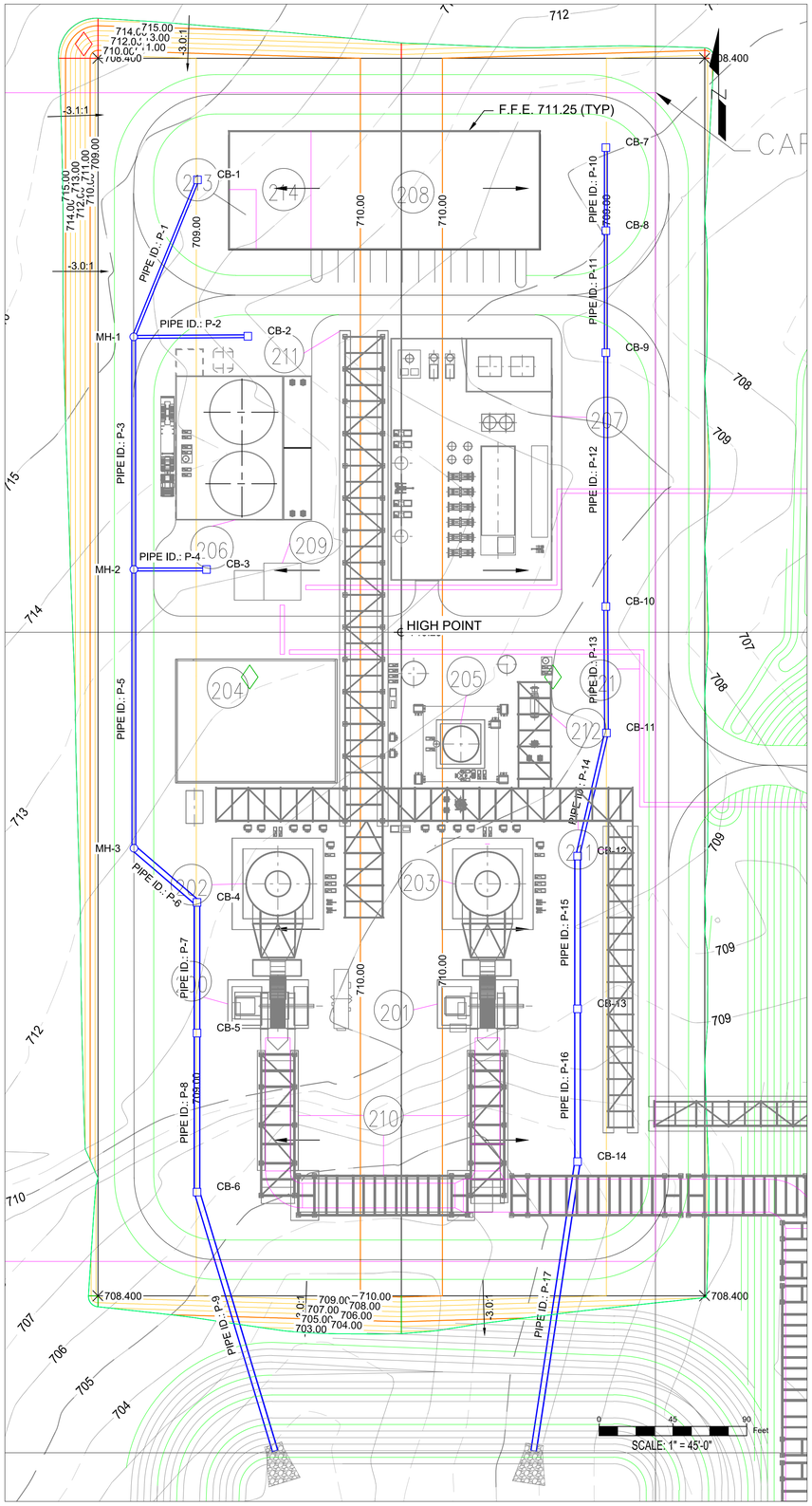

SITE DRAINAGE PLAN

CATCH BASIN AND MANHOLE SCHEDULE

MH\CB NO.	NORTHING	EASTING	TOP\RIM ELEV. (FT)	SIZE	INVERT IN	INVERT OUT	REMARKS
CB-1	10775.693	4220.731	708.208	48 x 48 inch Rectangular Structure		706.000 (P-1)	
CB-2	10680.384	4251.447	708.040	48 x 48 inch Rectangular Structure		705.831 (P-2)	
CB-3	10538.253	4226.211	708.000	48 x 48 inch Rectangular Structure		704.996 (P-4)	
CB-4	10335.350	4220.449	708.000	48 x 48 inch Rectangular Structure	703.672 (P-6)	703.672 (P-7)	
CB-5	10255.748	4220.449	708.000	48 x 48 inch Rectangular Structure	703.274 (P-7)	703.274 (P-8)	
CB-6	10158.805	4220.449	708.000	48 x 48 inch Rectangular Structure	702.789 (P-8)	702.789 (P-9)	
CB-7	10795.312	4469.712	708.208	48 x 48 inch Rectangular Structure		706.000 (P-10)	
CB-8	10744.682	4469.712	708.000	48 x 48 inch Rectangular Structure	705.747 (P-10)	705.747 (P-11)	
CB-9	10670.355	4469.712	708.125	48 x 48 inch Rectangular Structure	705.375 (P-11)	705.375 (P-12)	
CB-10	10515.644	4469.712	708.000	48 x 48 inch Rectangular Structure	704.602 (P-12)	704.602 (P-13)	
CB-11	10438.621	4470.090	708.000	48 x 48 inch Rectangular Structure	704.217 (P-13)	704.217 (P-14)	
CB-12	10363.567	4452.485	708.000	48 x 48 inch Rectangular Structure	703.831 (P-14)	703.831 (P-15)	
CB-13	10270.521	4452.449	708.000	48 x 48 inch Rectangular Structure	703.366 (P-15)	703.366 (P-16)	
CB-14	10177.402	4452.485	708.000	48 x 48 inch Rectangular Structure	702.900 (P-16)	702.900 (P-17)	
MH-1	10679.948	4181.800	708.733	48 inch Cylindrical Structure	705.483 (P-1) 705.483 (P-2)	705.483 (P-3)	
MH-2	10538.229	4181.877	708.025	48 inch Cylindrical Structure	704.775 (P-3) 704.775 (P-4)	704.775 (P-5)	
MH-3	10368.370	4181.970	708.259	48 inch Cylindrical Structure	703.925 (P-5)	703.925 (P-6)	

PIPE SCHEDULE

PIPE ID	SIZE	LENGTH	SLOPE	MATERIAL	START NORTHING	START EASTING	INVERT IN	END NORTHING	END EASTING	INVERT OUT
P-1	18.00"	99.18	0.50%	Reinforced Concrete Pipe	10775.693	4220.731	706.000	10679.948	4181.800	705.483
P-2	18.00"	65.66	0.50%	Reinforced Concrete Pipe	10680.384	4251.447	705.831	10679.948	4181.800	705.483
P-3	24.00"	137.73	0.50%	Reinforced Concrete Pipe	10679.948	4181.800	705.483	10538.229	4181.877	704.775
P-4	18.00"	40.34	0.50%	Reinforced Concrete Pipe	10538.253	4226.211	704.996	10538.229	4181.877	704.775
P-5	24.00"	165.87	0.50%	Reinforced Concrete Pipe	10538.229	4181.877	704.775	10368.370	4181.970	703.925
P-6	36.00"	45.98	0.50%	Reinforced Concrete Pipe	10368.370	4181.970	703.925	10335.350	4220.449	703.672
P-7	36.00"	75.62	0.50%	Reinforced Concrete Pipe	10335.350	4220.449	703.672	10255.748	4220.449	703.274
P-8	36.00"	92.96	0.50%	Reinforced Concrete Pipe	10255.748	4220.449	703.274	10158.805	4220.449	702.789
P-9	36.00"	162.83	5.34%	Reinforced Concrete Pipe	10158.805	4220.449	702.789	10001.223	4268.023	694.000
P-10	18.00"	46.64	0.50%	Reinforced Concrete Pipe	10795.312	4469.712	706.000	10744.682	4469.712	705.747
P-11	18.00"	70.34	0.50%	Reinforced Concrete Pipe	10744.682	4469.712	705.747	10670.355	4469.712	705.375
P-12	24.00"	150.73	0.50%	Reinforced Concrete Pipe	10670.355	4469.712	705.375	10515.644	4469.712	704.602
P-13	24.00"	73.04	0.50%	Reinforced Concrete Pipe	10515.644	4469.712	704.602	10438.621	4470.090	704.217
P-14	24.00"	72.98	0.50%	Reinforced Concrete Pipe	10438.621	4470.090	704.217	10363.567	4452.485	703.831
P-15	36.00"	89.07	0.50%	Reinforced Concrete Pipe	10363.567	4452.485	703.831	10270.521	4452.449	703.366
P-16	36.00"	89.14	0.50%	Reinforced Concrete Pipe	10270.521	4452.449	703.366	10177.402	4452.485	702.900
P-17	36.00"	176.49	4.99%	Reinforced Concrete Pipe	10177.402	4452.485	702.900	10001.223	4425.696	694.000

LEGEND:

- EXISTING 5' MAJOR CONTOUR
- EXISTING 1' MINOR CONTOUR
- EXISTING PLANT GRADING CONTOUR
- PROPOSED 5' MAJOR CONTOUR
- PROPOSED 1' MINOR CONTOUR
- MH-* ○ MANHOLE
- CB-* □ CATCH BASIN

NO.	DATE	REVISIONS	BY	CHK	APPR
0	11/16/20	ISSUED FOR INFORMATION	MHN	VS	VS

Owner
U. S. DEPARTMENT OF ENERGY, OFFICE OF FOSSIL ENERGY, NATIONAL ENERGY TECHNOLOGY LABORATORY

Contractor
BECHTEL NATIONAL, INC.

FEED STUDY FOR CARBON CAPTURE PLANT RETROFIT

SITE DRAINAGE PLAN

Sheet Size 594 X 841 "A1" | Scale AS SHOWN

JOB NO.	DRAWING NO.	REV.
26301	000-CD-0000-00001	0

ACKNOWLEDGMENT: This material is based upon work supported by the Department of Energy Award Number DE-FE0031584.

Disclaimer: This report was prepared as an account of work sponsored by an agency of the United States Government. Neither the United States Government nor any agency thereof, nor any of their employees, makes any warranty, express or implied, or assumes any legal liability or responsibility for the accuracy, completeness, or usefulness of any information, apparatus, product, or process disclosed, or represents that its use would not infringe privately owned rights. Reference herein to any specific commercial product, process, or service by trade name, trademark, manufacturer, or otherwise does not necessarily constitute or imply its endorsement, recommendation, or favoring by the United States Government or any agency thereof. The views and opinions of authors expressed herein do not necessarily state or reflect those of the United States Government or any agency thereof.

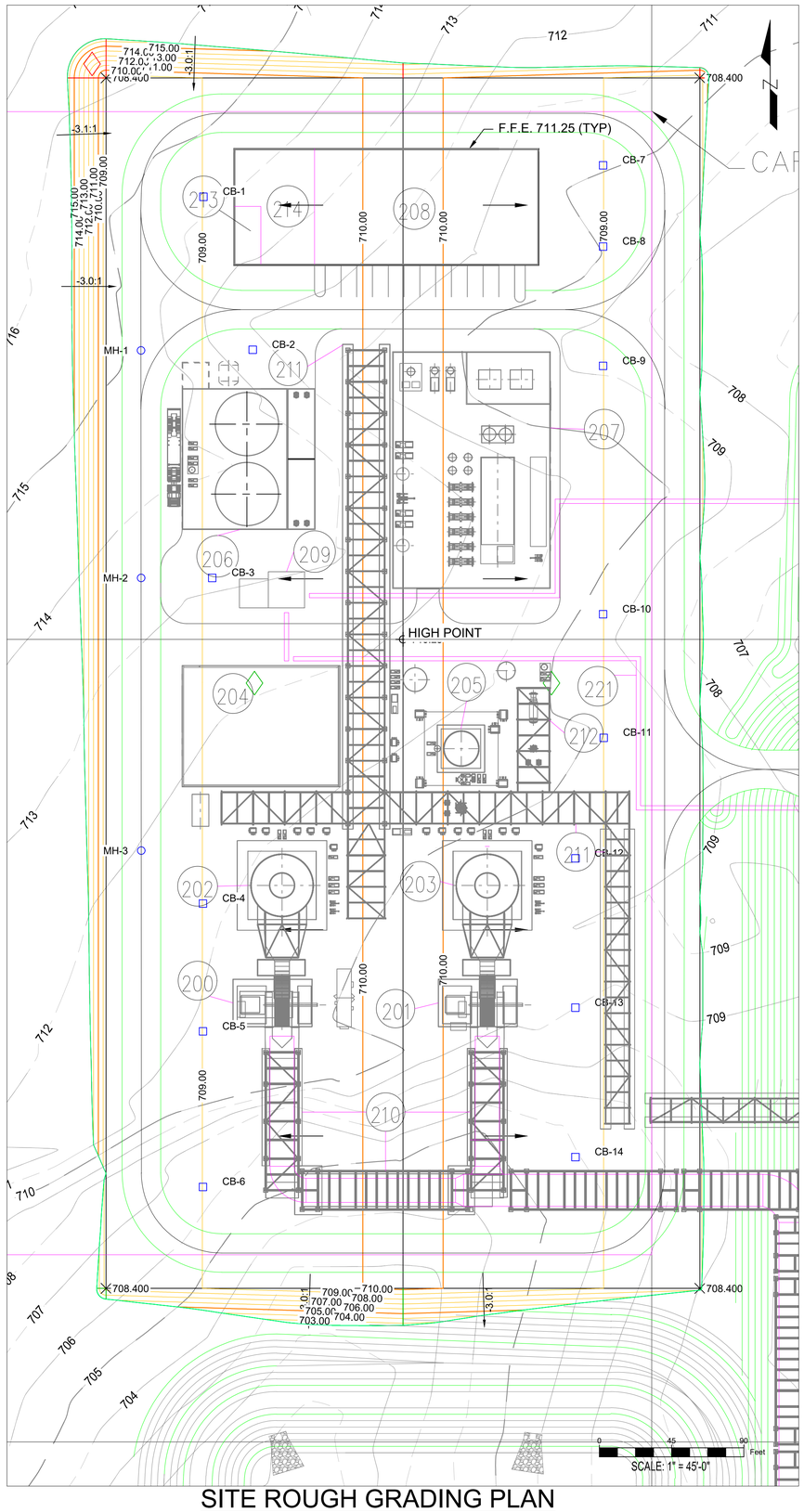

SITE ROUGH GRADING PLAN

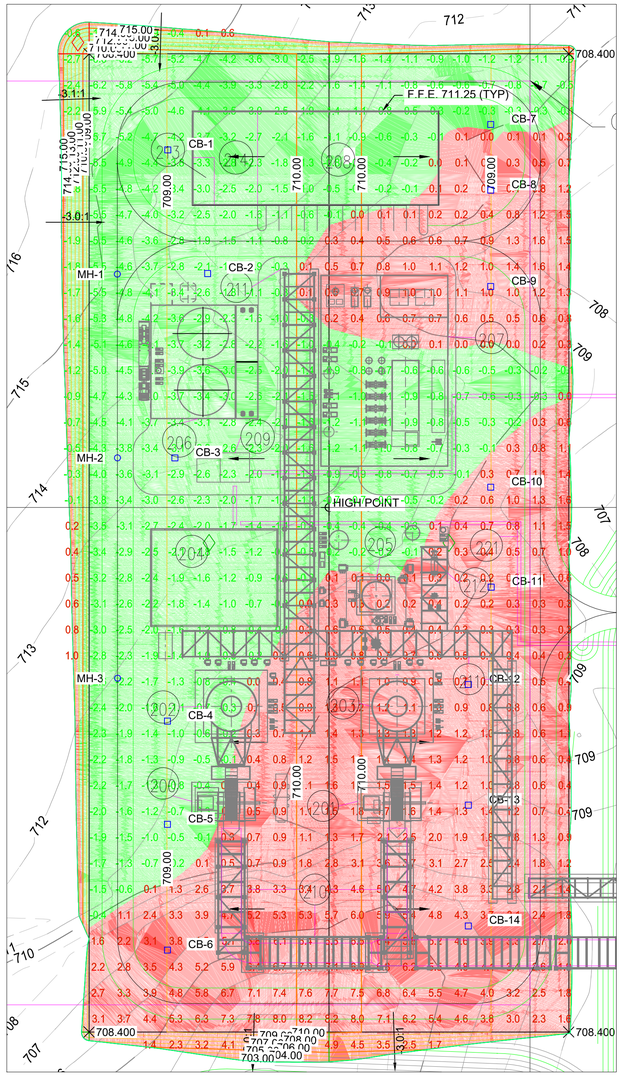

SITE ISOPACH SURFACE

NOTE:
GREEN = CUT
RED = FILL

Cut/Fill Report							
Surface Name	Type	Cut Factor	Fill Factor	2d Area	Cut	Fill	Net
VS Rough Grade (Stripped 12)	full	1.000	1.000	301636.02	11244.86	11267.05	22.19<Fill>

LEGEND:

- EXISTING 5' MAJOR CONTOUR
- EXISTING 1' MINOR CONTOUR
- EXISTING PLANT GRADING CONTOUR
- PROPOSED 5' MAJOR CONTOUR
- PROPOSED 1' MINOR CONTOUR
- MH-* ○ MANHOLE
- CB-* □ CATCH BASIN

NOTES:

1. ALL UNITS ARE IN FEET U.N.O.
2. 12 INCHES OF STRIPPING IS ASSUMED WITHIN THE GRADING FOOTPRINT.
3. ALL CUT\FILL SIDE SLOPES ARE ASSUMED TO BE 3(H) : 1(V)

NO.	DATE	REVISIONS	BY	CHK	APPR
0	11/16/20	ISSUED FOR INFORMATION	MHN	VS	VS

Owner
U. S. DEPARTMENT OF ENERGY, OFFICE OF FOSSIL ENERGY, NATIONAL ENERGY TECHNOLOGY LABORATORY

Contractor
BECHTEL NATIONAL, INC.

FEED STUDY FOR CARBON CAPTURE PLANT RETROFIT

SITE ROUGH GRADING PLAN

Sheet Size 594 X 841 "A1" Scale AS SHOWN

JOB NO.	DRAWING NO.	REV.
26301	000-CG-0000-00001	0

Acknowledgment: This material is based upon work supported by the Department of Energy Award Number DE-FE0031848

Disclaimer: This report was prepared as an account of work sponsored by an agency of the United States Government. Neither the United States Government nor any agency thereof, nor any of their employees, makes any warranty, express or implied, or assumes any legal liability or responsibility for the accuracy, completeness, or usefulness of any information, apparatus, product, or process disclosed, or represents that its use would not infringe privately owned rights. Reference herein to any specific commercial product, process, or service by trade name, trademark, manufacturer, or otherwise does not necessarily constitute or imply its endorsement, recommendation, or favoring by the United States Government or any agency thereof. The views and opinions of authors expressed herein do not necessarily state or reflect those of the United States Government or any agency thereof.

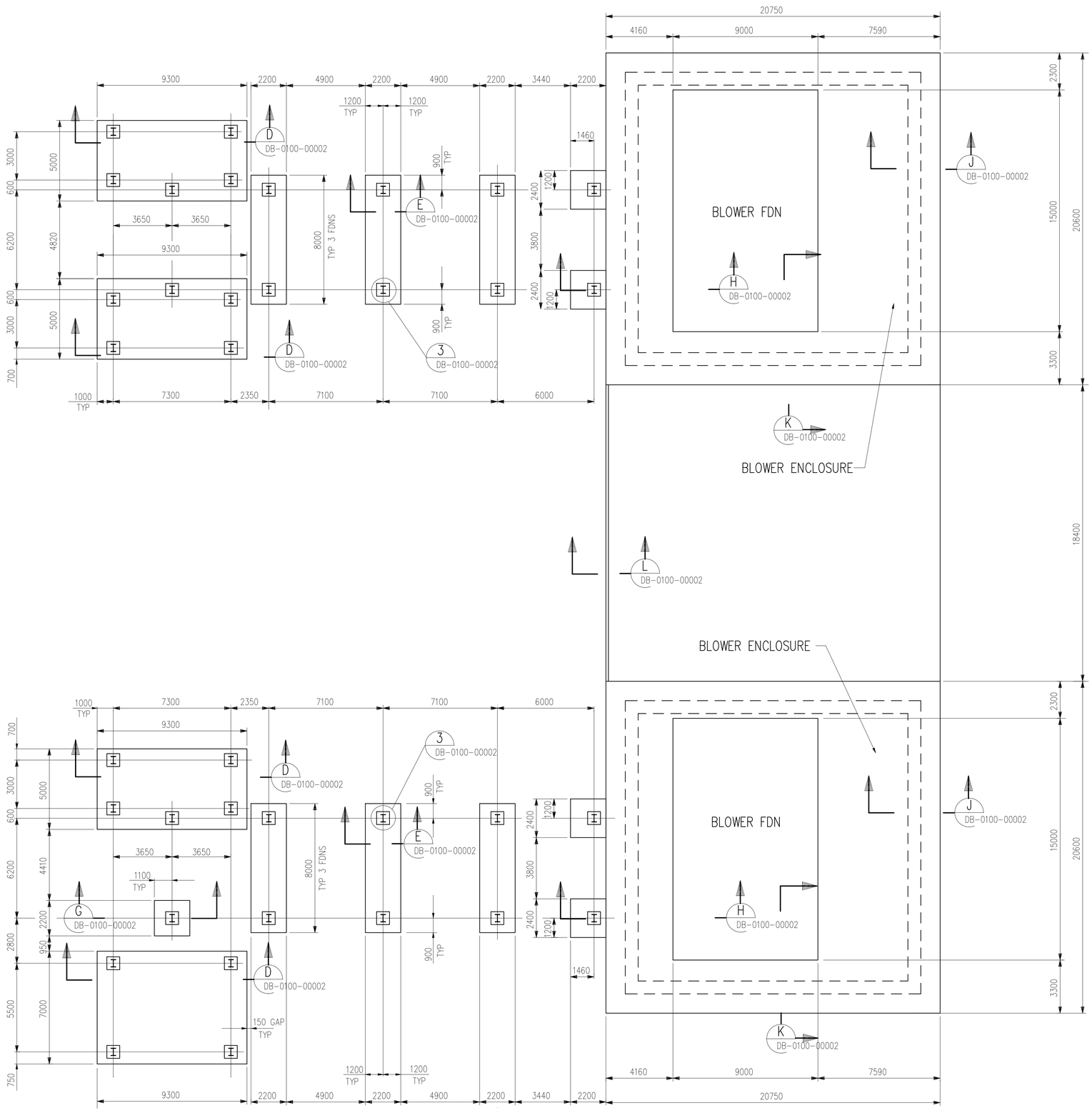

PARTIAL PLAN FOUNDATIONS

NOTES:

1. THESE DRAWINGS ARE INTENDED TO BE READ IN CONJUNCTION WITH THE DESIGN PHILOSOPHY AND ACCEPTENCE CRITERIA FOR CIVIL WORKS 25474-000-30Y-C016-00001. THIS DOCUMENT CONTAINS INFORMATION ON APPLICABLE STANDARDS AND MATERIAL SELECTION.
2. ALL DIMENSIONS ARE IN MILLIMETERS. ALL COORDINATES AND ELEVATIONS ARE IN METERS, UNLESS NOTED OTHERWISE.
3. USE OF BLINDING CONCRETE (B20) IS PERMISSABLE AS AN OPTION TO THE CONTRACTOR.

NO.	DATE	REVISIONS	BY	CHK	APPR
0	10/28/20	ISSUED FOR INFORMATION	KML	VS	VS

Owner
U. S. DEPARTMENT OF ENERGY, OFFICE OF FOSSIL ENERGY, NATIONAL ENERGY TECHNOLOGY LABORATORY

Contractor
BECHTEL NATIONAL, INC.

FEED STUDY FOR CARBON CAPTURE PLANT RETROFIT

DUCTWORK FOUNDATION PLAN
W/TYPICAL SECTIONS & DETAILS
SHEET 1 OF 2

Sheet Size 594 X 841 "A1" | Scale AS SHOWN

JOB NO.	DRAWING NO.	REV.
26301	000-DB-0100-00001	0

Acknowledgment: This material is based upon work supported by the Department of Energy Award Number DE-FE0031848

Disclaimer: This report was prepared as an account of work sponsored by an agency of the United States Government. Neither the United States Government nor any agency thereof, nor any of their employees, makes any warranty, express or implied, or assumes any legal liability or responsibility for the accuracy, completeness, or usefulness of any information, apparatus, product, or process disclosed, or represents that its use would not infringe privately owned rights. Reference herein to any specific commercial product, process, or service by trade name, trademark, manufacturer, or otherwise does not necessarily constitute or imply its endorsement, recommendation, or favoring by the United States Government or any agency thereof. The views and opinions of authors expressed herein do not necessarily state or reflect those of the United States Government or any agency thereof.

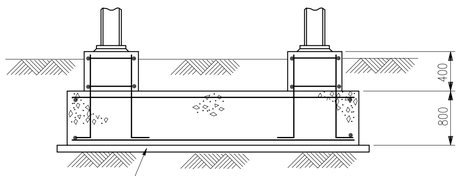

SECTION D
NTS

TYP 4 PLACES

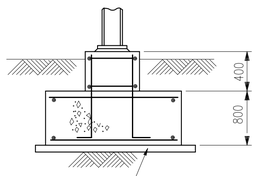

SECTION E
NTS

TYP 6 PLACES

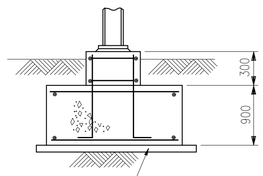

SECTION G
NTS

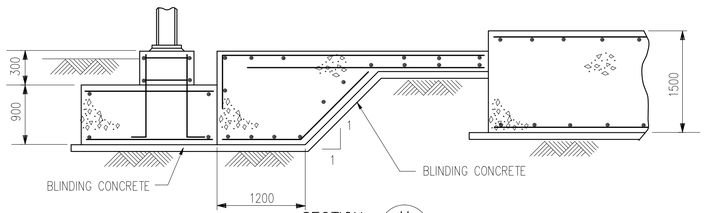

SECTION H
NTS

TYP 4 PLACES

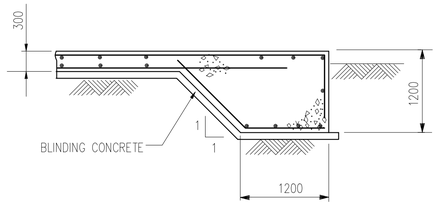

SECTION J
NTS

TYP 4 – SIDES

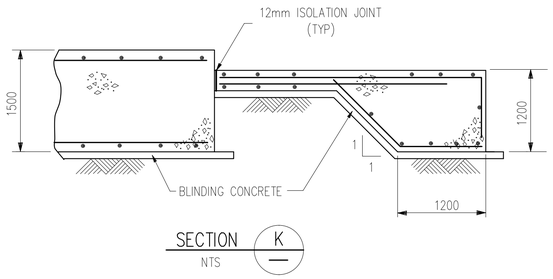

SECTION K
NTS

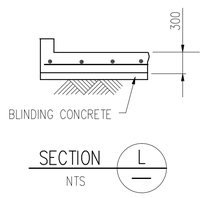

SECTION L
NTS

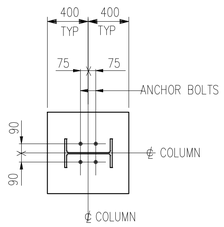

DETAIL 3
NTS

TYP 36 PLACES

FOR GENERAL NOTES SEE DRAWING DB-0100-00001

NO.	DATE	REVISIONS	BY	CHK	APPR
0	10/26/20	ISSUED FOR INFORMATION	KML	VS	VS

Owner
U. S. DEPARTMENT OF ENERGY,
OFFICE OF FOSSIL ENERGY,
NATIONAL ENERGY
TECHNOLOGY LABORATORY

Contractor
BECHTEL NATIONAL, INC.

FEED STUDY FOR CARBON CAPTURE PLANT RETROFIT

DUCTWORK FOUNDATION PLAN W/TYPICAL SECTIONS & DETAILS
Sheet 2 of 2

Sheet Size 594 X 841 "A1" | Scale AS SHOWN

JOB NO.	DRAWING NO.	REV.
26301	000-DB-0100-00002	0

Acknowledgment: This material is based upon work supported by the Department of Energy Award Number DE-FE0031838
Disclaimer: This report was prepared as an account of work sponsored by an agency of the United States Government. Neither the United States Government nor any agency thereof, nor any of their employees, makes any warranty, express or implied, or assumes any legal liability or responsibility for the accuracy, completeness, or usefulness of any information, apparatus, product, or process disclosed, or represents that its use would not infringe privately owned rights. Reference herein to any specific commercial product, process, or service by trade name, trademark, manufacturer, or otherwise does not necessarily constitute or imply its endorsement, recommendation, or favoring by the United States Government or any agency thereof. The views and opinions of authors expressed herein do not necessarily state or reflect those of the United States Government or any agency thereof.

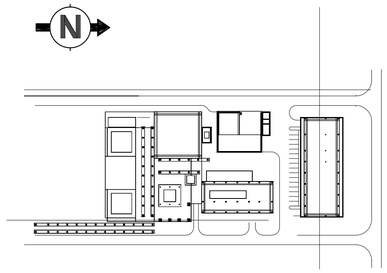

KEY PLAN

NOTES:

1. THESE DRAWINGS ARE INTENDED TO BE READ IN CONJUNCTION WITH THE DESIGN PHILOSOPHY AND ACCEPTENCE CRITERIA FOR CIVIL WORKS 26301-000-30Y-C016-00001. THIS DOCUMENT CONTAINS INFORMATION ON APPLICABLE STANDARDS AND MATERIAL SELECTION.
2. ALL DIMENSIONS ARE IN MILLIMETERS. ALL ELEVATIONS AND COORDINATES ARE IN METERS, UNLESS NOTED OTHERWISE.
3. USE OF BLINDING CONCRETE (B20) IS PERMISSABLE AS AN OPTION TO THE CONTRACTOR.

PARTIAL PLAN FOUNDATIONS

WORK THIS DRAWING WITH DRAWING 000-DB-0200-00002

NO.	DATE	REVISIONS	BY	CHK	APPR
0	10/28/20	ISSUED FOR INFORMATION	KML	VS	VS

Owner: U.S. DEPARTMENT OF ENERGY, OFFICE OF FOSSIL ENERGY, NATIONAL ENERGY TECHNOLOGY LABORATORY

FEED STUDY FOR CARBON CAPTURE PLANT RETROFIT

CCC PLANT FOUNDATION PLAN WITH TYPICAL SECTIONS AND DETAILS SHEET 1 OF 4

Contractor: BECHTEL NATIONAL, INC.

Sheet Size: 594 X 841 "A1" Scale: AS SHOWN

JOB NO.	DRAWING NO.	REV.
26301	000-DB-0200-00001	0

Acknowledgment: This material is based upon work supported by the Department of Energy Award Number DE-FE0031848

Disclaimer: This report was prepared as an account of work sponsored by an agency of the United States Government. Neither the United States Government nor any agency thereof, nor any of their employees, makes any warranty, express or implied, or assumes any legal liability or responsibility for the accuracy, completeness, or usefulness of any information, apparatus, product, or process disclosed, or represents that its use would not infringe privately owned rights. Reference herein to any specific commercial product, process, or service by trade name, trademark, manufacturer, or otherwise does not necessarily constitute or imply its endorsement, recommendation, or favoring by the United States Government or any agency thereof. The views and opinions of authors expressed herein do not necessarily state or reflect those of the United States Government or any agency thereof.

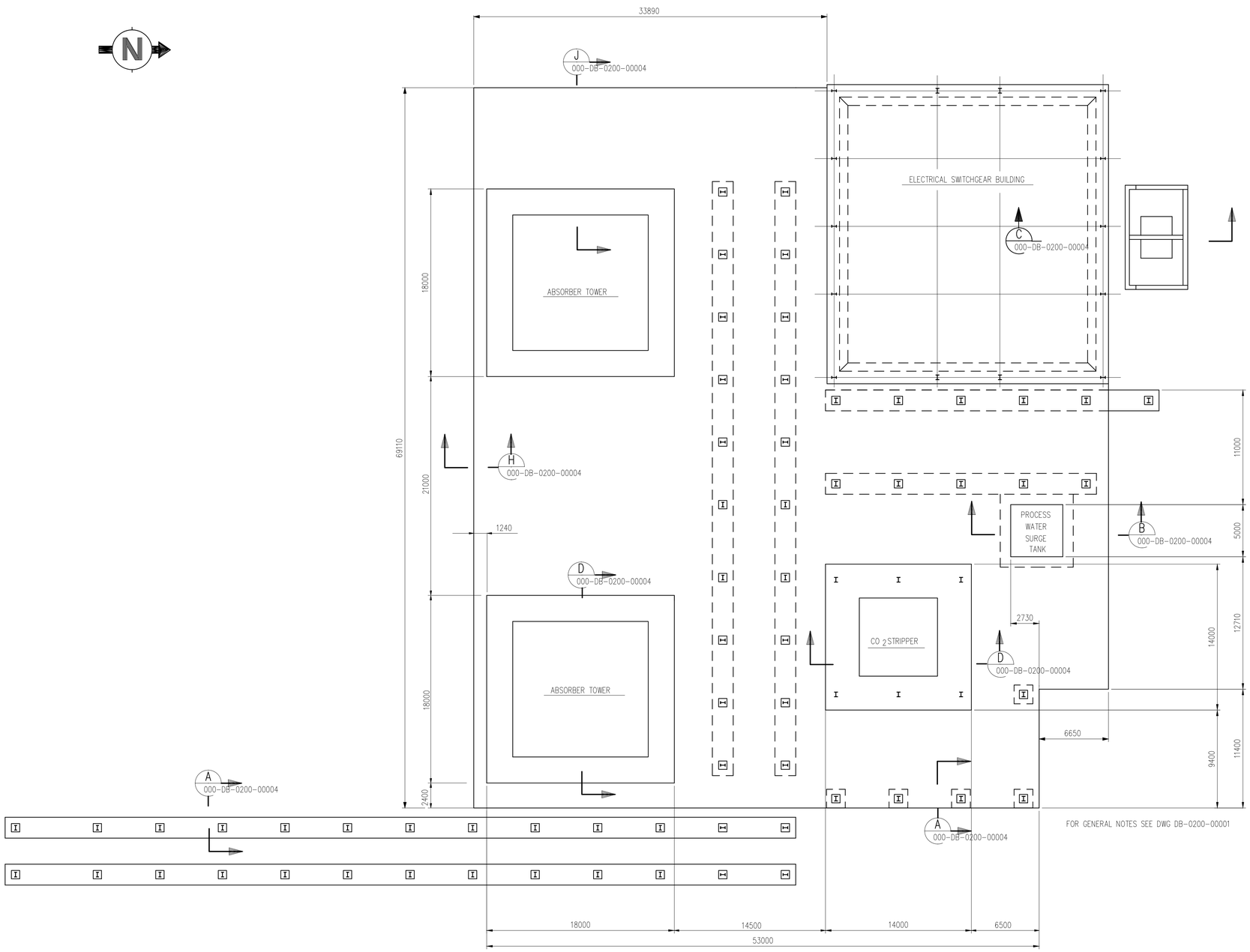

PARTIAL PLAN GRADE SLAB

WORK THIS DRAWING WITH DRAWING 000-DB-0200-00001

NO.	DATE	REVISIONS	BY	CHK	APPR
0	10/26/20	ISSUED FOR INFORMATION	KML	VS	VS

Owner

U. S. DEPARTMENT OF ENERGY, OFFICE OF FOSSIL ENERGY, NATIONAL ENERGY TECHNOLOGY LABORATORY

Contractor

BECHTEL NATIONAL, INC.

FEED STUDY FOR CARBON CAPTURE PLANT RETROFIT

CCC PLANT FOUNDATION PLAN WITH TYPICAL SECTIONS AND DETAILS SHEET 2 OF 4

Sheet Size 594 X 841 "A1" | Scale AS SHOWN

JOB NO.	DRAWING NO.	REV.
26301	000-DB-0200-00002	0

Acknowledgment: This material is based upon work supported by the Department of Energy Award Number DE-FE0031848

Disclaimer: This report was prepared as an account of work sponsored by an agency of the United States Government. Neither the United States Government nor any agency thereof, nor any of their employees, makes any warranty, express or implied, or assumes any legal liability or responsibility for the accuracy, completeness, or usefulness of any information, apparatus, product, or process disclosed, or represents that its use would not infringe privately owned rights. Reference herein to any specific commercial product, process, or service by trade name, trademark, manufacturer, or otherwise does not necessarily constitute or imply its endorsement, recommendation, or favoring by the United States Government or any agency thereof. The views and opinions of authors expressed herein do not necessarily state or reflect those of the United States Government or any agency thereof.

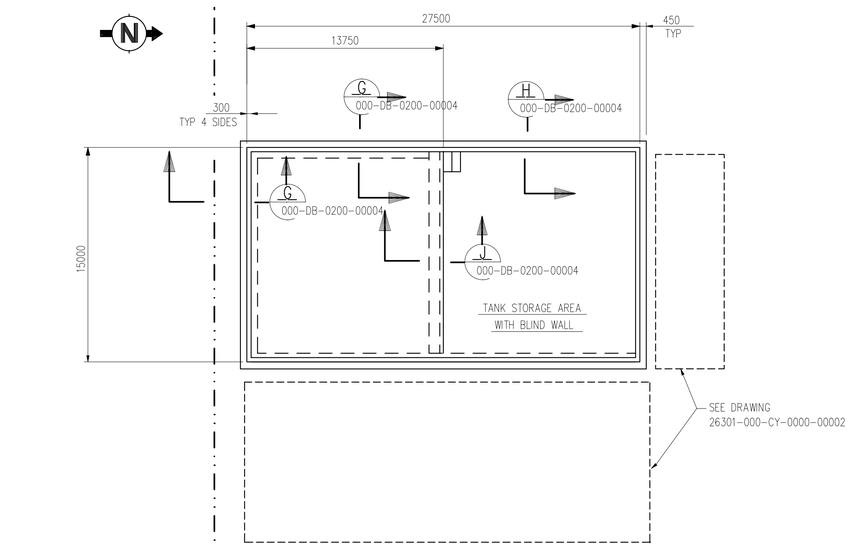

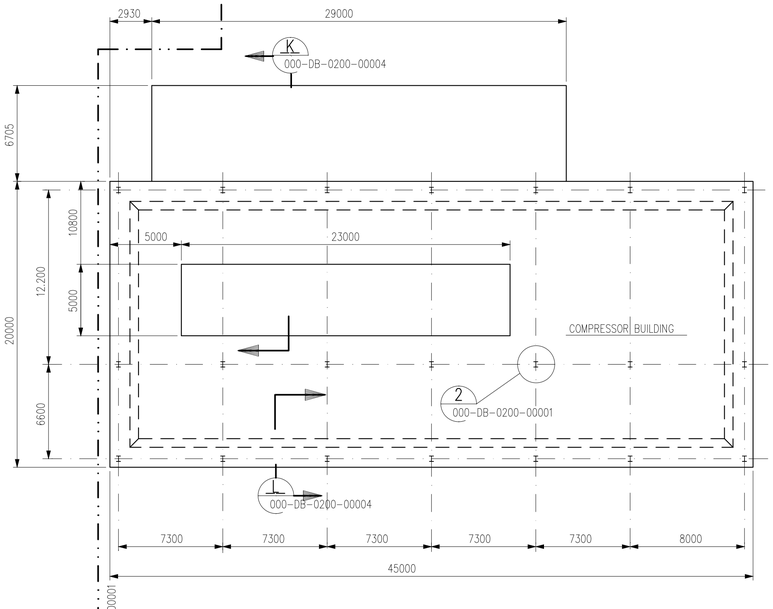

PARTIAL PLAN FOUNDATIONS

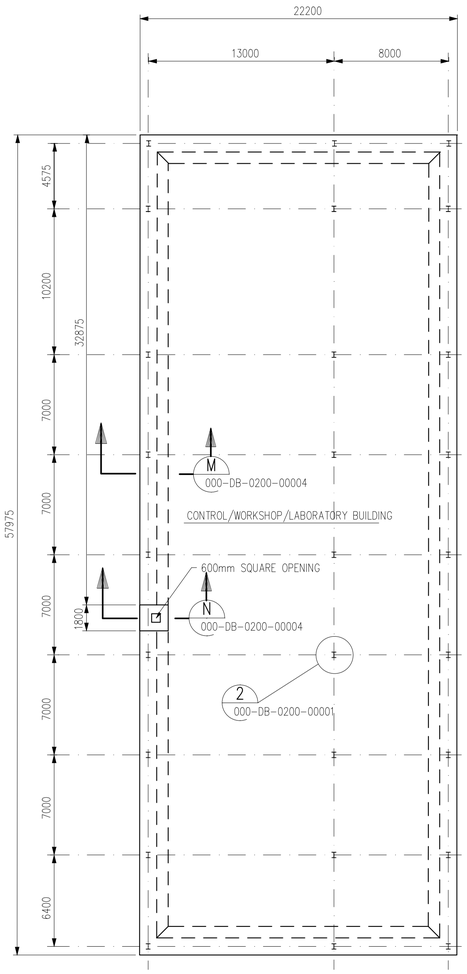

FOR GENERAL NOTES SEE DWG DB-0200-00001

NO.	DATE	REVISIONS	BY	CHK	APPR
0	10/28/20	ISSUED FOR INFORMATION	KML	VS	VS

Owner
U. S. DEPARTMENT OF ENERGY, OFFICE OF FOSSIL ENERGY, NATIONAL ENERGY TECHNOLOGY LABORATORY

Contractor
BECHTEL NATIONAL, INC.

FEED STUDY FOR CARBON CAPTURE PLANT RETROFIT

CCC PLANT FOUNDATION PLAN
WITH TYPICAL SECTIONS AND DETAILS
SHEET 3 OF 4

Sheet Size 594 X 841 "A1" | Scale AS SHOWN

JOB NO.	DRAWING NO.	REV.
26301-000	DB-0200-00003	0

Acknowledgment: This material is based upon work supported by the Department of Energy Award Number DE-FE0031848

Disclaimer: This report was prepared as an account of work sponsored by an agency of the United States Government. Neither the United States Government nor any agency thereof, nor any of their employees, makes any warranty, express or implied, or assumes any legal liability or responsibility for the accuracy, completeness, or usefulness of any information, apparatus, product, or process disclosed, or represents that its use would not infringe privately owned rights. Reference herein to any specific commercial product, process, or service by trade name, trademark, manufacturer, or otherwise does not necessarily constitute or imply its endorsement, recommendation, or favoring by the United States Government or any agency thereof. The views and opinions of authors expressed herein do not necessarily state or reflect those of the United States Government or any agency thereof.

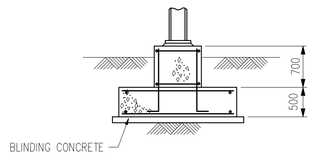

SECTION A
NTS

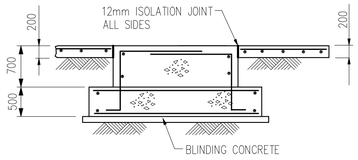

SECTION B
NTS

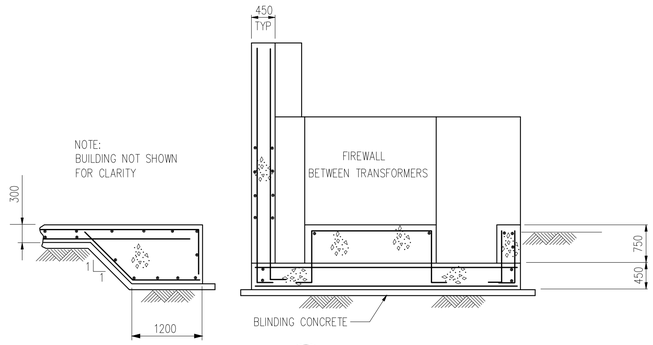

SECTION C
NTS

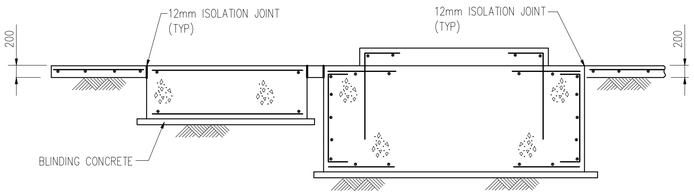

SECTION E
NTS

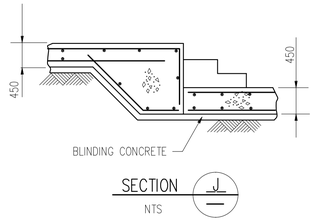

SECTION J
NTS

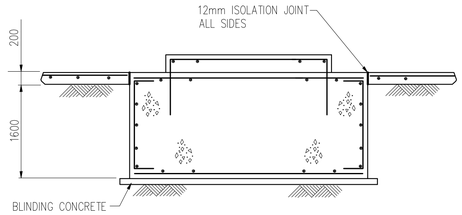

SECTION D
NTS

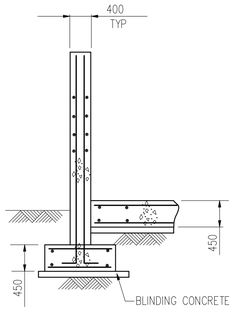

SECTION G
NTS

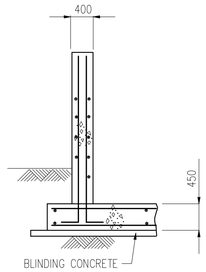

SECTION H
NTS

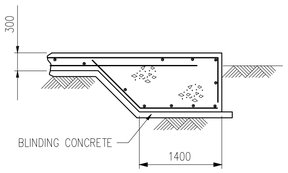

SECTION L
NTS

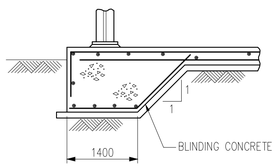

SECTION M
NTS

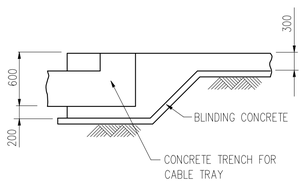

SECTION N
NTS

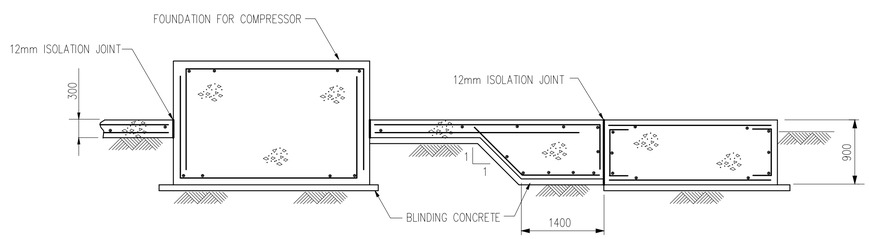

SECTION K
NTS

FOR GENERAL NOTES SEE DWG 000-DB-0200-00001

NO.	DATE	REVISIONS	BY	CHK	APPR
0	10/28/20	ISSUED FOR INFORMATION	KML	VS	VS

Owner
U. S. DEPARTMENT OF ENERGY, OFFICE OF FOSSIL ENERGY, NATIONAL ENERGY TECHNOLOGY LABORATORY

Contractor
BECHTEL NATIONAL, INC.

FEED STUDY FOR CARBON CAPTURE PLANT RETROFIT

CCC PLANT FOUNDATION PLAN
WITH TYPICAL SECTIONS AND DETAILS
SHEET 4 OF 4

Sheet Size 594 X 841 "A1" | Scale AS SHOWN

JOB NO.	DRAWING NO.	REV.
26301	000-DB-0200-00004	0

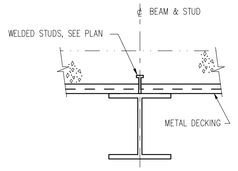

DETAIL 1

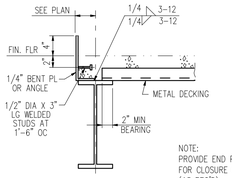

DETAIL 2

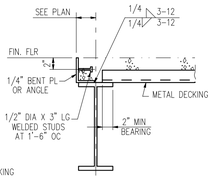

NOTE:
PROVIDE END PLATE
FOR CLOSURE @ DECKING
(AS REQ'D)

DETAIL 3

METAL DECKING DETAILS

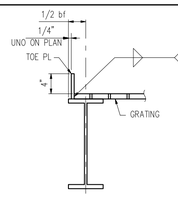

DETAIL 4

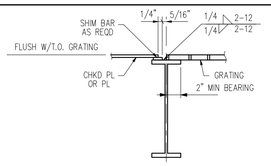

CHECKERED PLATE/GRATING INTERFACE

DETAIL 5

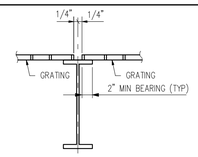

GRATING/GRATING INTERFACE

DETAIL 5A

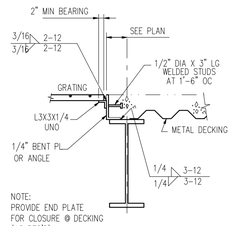

NOTE:
PROVIDE END PLATE
FOR CLOSURE @ DECKING
(AS REQ'D)

GRATING/METAL DECKING INTERFACE

DETAIL 6

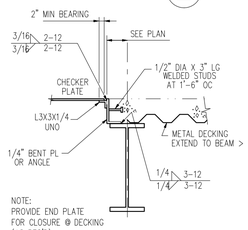

NOTE:
PROVIDE END PLATE
FOR CLOSURE @ DECKING
(AS REQ'D)

CHECKER PLATE/METAL DECKING INTERFACE

DETAIL 6A

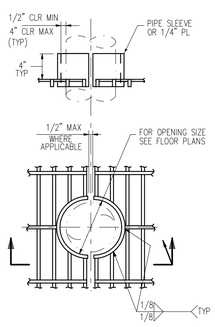

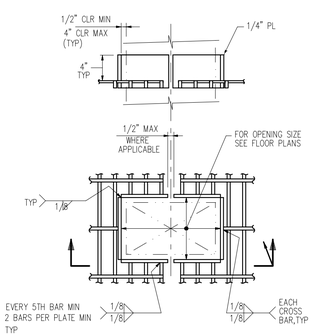

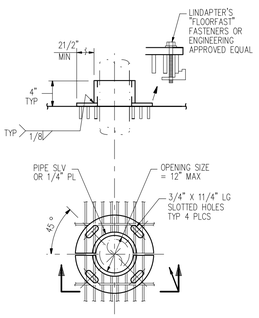

GRATING PENETRATIONS

DETAIL 7

NOTE: FIELD CUT GRATING OPENINGS UP TO 12" IN DIA WHERE REQUIRED FOR PENETRATIONS NOT SHOWN ON PLAN, PROVIDED THAT A MINIMUM OF 2 WELDED BEARING BARS REMAIN ON THE APPROPRIATE PENETRATION SIDES. GRATING SHALL BE BANDED AT ALL EDGES. PIPE SLEEVE OR TOE PLATE MAY BE SPLIT AS SHOWN. FOR PENETRATIONS OF 10" DIA. OR LESS FIELD HAS THE OPTION TO USE GRATING PENETRATION COLLARS AS MANUFACTURED BY INTREPID INDUSTRIES OR ENGINEERING APPROVED EQUAL.

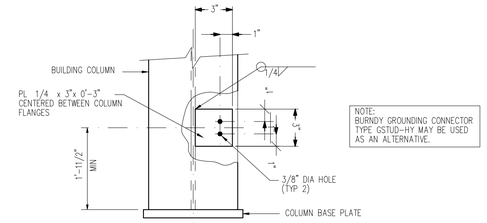

NOTE:
BURNDY GROUNDING CONNECTOR
TYPE GSTUD-HY MAY BE USED
AS AN ALTERNATIVE.

GROUND LUG CONNECTION
FOR LOCATION SEE COLUMN SCHEDULE & MODEL

DETAIL 8

NOTES:
1. BOLTED CONNECTIONS SHALL BE IN ACCORDANCE TO AISC STANDARDS.
2. WELDING SHOWN SHALL BE IN ACCORDANCE TO THE AWS D1.1 STRUCTURAL WELDING CODE.
3. STRUCTURAL AND MISCELLANEOUS STEEL CONFORM TO THE FOLLOWING:
   A. ASTM A-36 STEEL: ANGLES, TOE PLATES HANDRAIL (EXCLUDING HANDRAIL POSTS) AND CONNECTION MATERIAL.
   B. ASTM A-572, GRADE 50, OR A992 STEEL: W SHAPES, CHANNELS, S SHAPES, WT SHAPES, COLUMN BASE PLATES, AND PLATE GIRDERS INCLUDING STIFFENER PLATES.
   C. ASTM A-913, GRADE 65 STEEL: W SHAPES WHERE SPECIFIED.
   D. ASTM A500, GRADE B: HOLLOW STRUCTURAL SECTIONS.
   E. ASTM A53, GRADE 50: HANDRAIL PIPE POSTS AND PIPE BRACING.
   F. MISCELLANEOUS PLATE STEEL, GUSSET PLATES, STIFFENER PLATES, CAP PLATES, POST PLATES AND ALL OTHER MISCELLANEOUS PLATES SHALL CONFORM TO ASTM A-36. ASTM A-572 OR A992 MATERIAL MAY BE USED AT FABRICATORS OPTION.
4. WELDED STUDS SHALL BE FURNISHED AND INSTALLED IN ACCORDANCE WITH AWS D1.1.

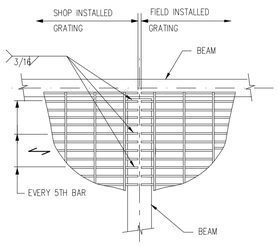

SHOP GRATING WELD DETAIL

DETAIL 9

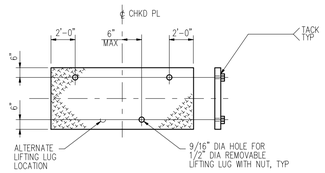

CHECKERED PLATE COVER LIFTING LUG

DETAIL 10

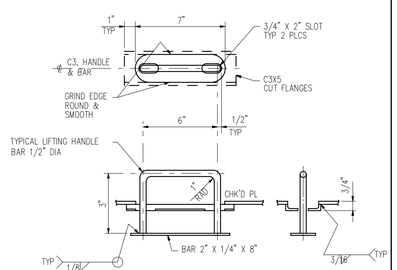

CHECKERED PLATE COVER LIFTING HANDLE

DETAIL 11

NO.	DATE	REVISIONS	BY	CHK	APPR
0	10/19/20	ISSUED FOR INFORMATION	KML	VS	VS

Owner
U. S. DEPARTMENT OF ENERGY, OFFICE OF FOSSIL ENERGY, NATIONAL ENERGY TECHNOLOGY LABORATORY

FEED STUDY FOR CARBON CAPTURE PLANT RETROFIT

STRUCTURAL STEEL SHEET
TYPICAL SECTIONS AND DETAILS

Contractor
BECHTEL NATIONAL, INC.

Sheet Size	Scale	
594 X 841 "A1"	AS SHOWN	
JOB NO.	DRAWING NO.	REV.
26301	000-S0-0000-00001	0

Acknowledgment: This report was prepared as an account of work sponsored by the Department of Energy Award Number DE-FE0031848.
Disclaimer: This report was prepared as an account of work sponsored by an agency of the United States Government. Neither the United States Government nor any agency thereof, nor any of their employees, makes any warranty, express or implied, or assumes any legal liability or responsibility for the accuracy, completeness, or usefulness of any information, apparatus, product, or process disclosed, or represents that its use would not infringe privately owned rights. Reference herein to any specific commercial product, process, or service by trade name, trademark, manufacturer, or otherwise does not necessarily constitute or imply its endorsement, recommendation, or favoring by the United States Government or any agency thereof. The views and opinions of authors expressed herein do not necessarily state or reflect those of the United States Government or any agency thereof.

Acknowledgment: This material is based upon work supported by the Department of Energy Award Number DE-FE0031918.
Disclaimer: This report was prepared as an account of work sponsored by an agency of the United States Government. Neither the United States Government nor any agency thereof, nor any of their employees, makes any warranty, express or implied, or assumes any legal liability or responsibility for the accuracy, completeness, or usefulness of any information, apparatus, product, or process disclosed, or represents that its use would not infringe privately owned rights. Reference herein to any specific commercial product, process, or service by trade name, trademark, manufacturer, or otherwise does not necessarily constitute or imply its endorsement, recommendation, or favoring by the United States Government or any agency thereof. The views and opinions of authors expressed herein do not necessarily state or reflect those of the United States Government or any agency thereof.

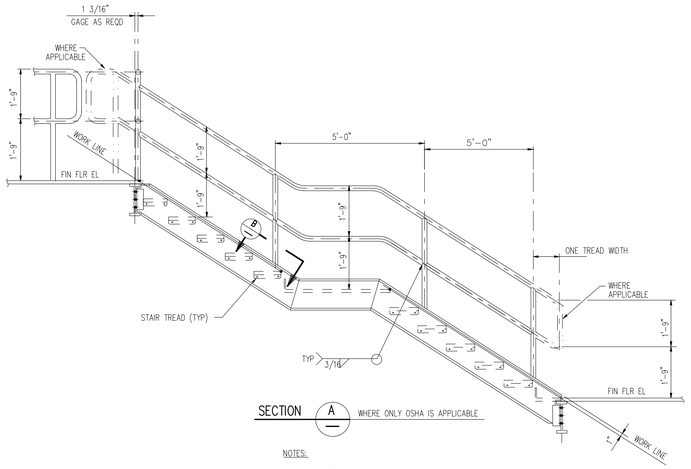

SECTION A — WHERE ONLY OSHA IS APPLICABLE

NOTES:

1. PROVIDE INTERMEDIATE POST AS REQUIRED. ALL HANDRAIL MUST TIE BACK INTO GUARDRAIL SYSTEM.
2. PROVIDE INTERMEDIATE POST AS REQUIRED. ALL HANDRAIL MUST TIE BACK INTO GUARDRAIL SYSTEM.

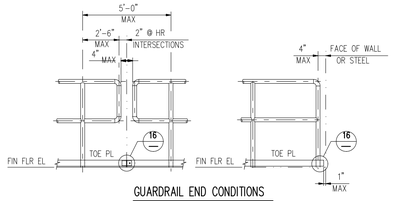

GUARDRAIL END CONDITIONS

DETAIL 1

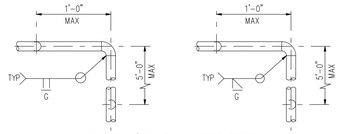

GUARDRAIL/HANDRAIL CORNER DETAIL

DETAIL 2

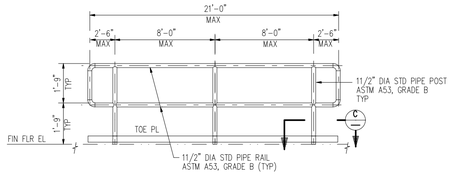

GUARDRAIL SECTION

DETAIL 3

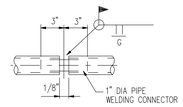

GUARDRAIL/HANDRAIL SPLICE

DETAIL 4

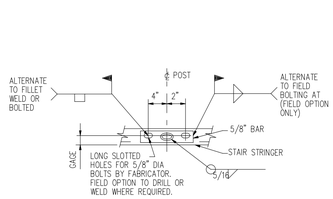

GUARDRAIL/HANDRAIL CONNECTION TO STAIR STRINGER

SECTION B

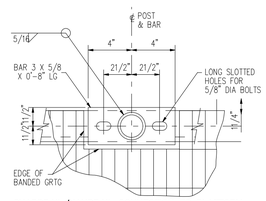

GUARDRAIL/HANDRAIL CONNECTION TO PLATFORM

NOTE: TOE PLATE NOT SHOWN FOR CLARITY

SECTION C

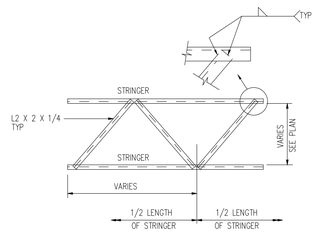

BRACING SCHEDULE	
NUMBER OF TREADS	NUMBER OF BRACES
5 TO 8	0
9 TO 12	2
13 TO 16	3
17 TO 20	4

DIAGONAL BRACING ACROSS BOTTOM OF STAIR STRINGERS

DETAIL 5

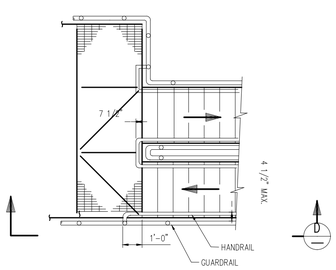

GUARDRAIL & HANDRAIL CONFIGURATION DETAIL

DETAIL 6 — WHERE IBC IS APPLICABLE

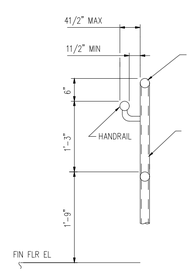

HANDRAIL CONNECTION TO POST

DETAIL 7

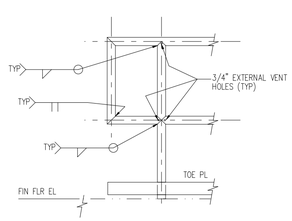

ALTERNATE GUARDRAIL/HANDRAIL

DETAIL 8

NOTES:
SEE DRAWING 26301-000-S0-0000-00001

NO.	DATE	REVISIONS	BY	CHK	APPR
0	10/19/20	ISSUED FOR INFORMATION	KML	VS	VS

Owner: U. S. DEPARTMENT OF ENERGY, OFFICE OF FOSSIL ENERGY, NATIONAL ENERGY TECHNOLOGY LABORATORY

Contractor: BECHTEL NATIONAL, INC.

FEED STUDY FOR CARBON CAPTURE PLANT RETROFIT

STRUCTURAL STEEL SHEET
TYPICAL SECTIONS AND DETALS

Sheet Size 594 X 841 "A1" | Scale AS SHOWN

JOB NO.	DRAWING NO.	REV.
26301	000-S0-0000-00002	0

Acknowledgment: This material is based upon work supported by the Department of Energy Award Number DE-FE0031848.

Disclaimer: This report was prepared as an account of work sponsored by an agency of the United States Government. Neither the United States Government nor any agency thereof, nor any of their employees, makes any warranty, express or implied, or assumes any legal liability or responsibility for the accuracy, completeness, or usefulness of any information, apparatus, product, or process disclosed, or represents that its use would not infringe privately owned rights. Reference herein to any specific commercial product, process, or service by trade name, trademark, manufacturer, or otherwise does not necessarily constitute or imply its endorsement, recommendation, or favoring by the United States Government or any agency thereof. The views and opinions of authors expressed herein do not necessarily state or reflect those of the United States Government or any agency thereof.

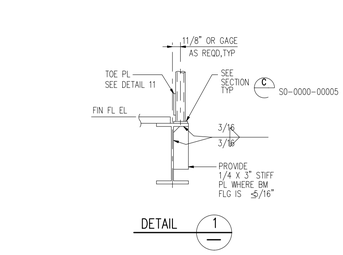

DETAIL 1

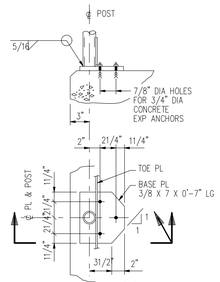

DETAIL 2

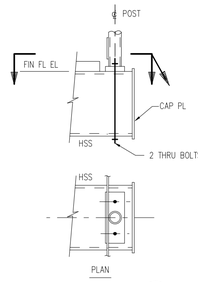

DETAIL 3

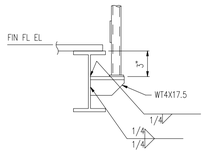

DETAIL 4

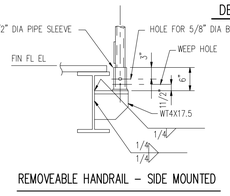

REMOVEABLE HANDRAIL – SIDE MOUNTED

DETAIL 4A

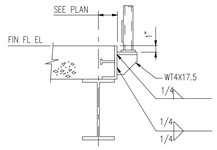

DETAIL 5

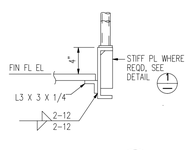

DETAIL 6

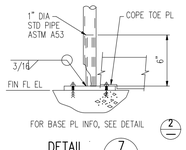

DETAIL 7

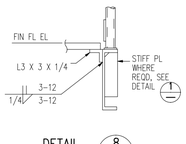

DETAIL 8

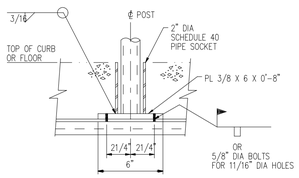

DETAIL 9

HANDRAIL CONNECTIONS TO PLATFORMS

FOR INFO NOT SHOWN IN DETAILS '3' THRU '9', SEE DETAIL '1'

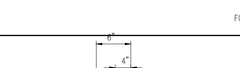

TO STEEL (ALTERNATE)



TO STEEL

NOTE: 1. CONN TO VERT BRACE SHOWN, CONN TO COLUMN SIMILAR

2. NO WELD BETWEEN THE PIPE CONNECTOR PIECE & HANDRAIL

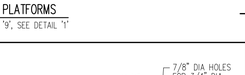

FOR INFO NOT SHOWN, SEE STEEL DETAIL LEFT

TO CONCRETE

HANDRAIL CONNECTIONS

DETAIL 10



DETAIL 9A

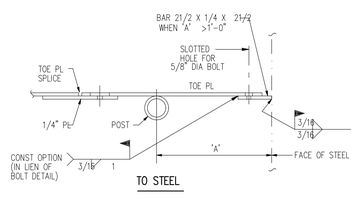

TO STEEL

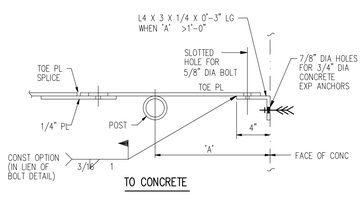

TO CONCRETE

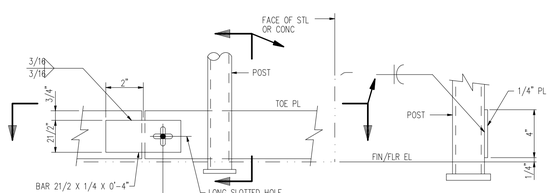

TOE PL CONNECTIONS

DETAIL 11

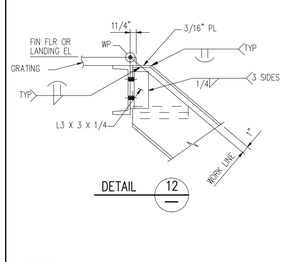

DETAIL 12

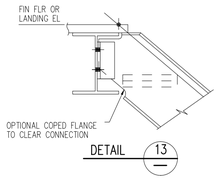

DETAIL 13

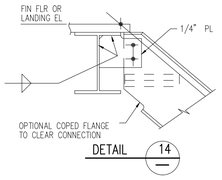

DETAIL 14

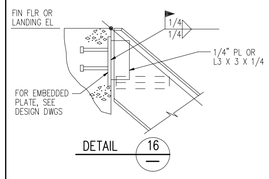

DETAIL 16

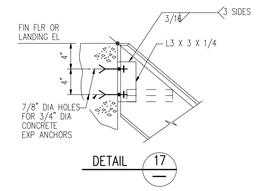

DETAIL 17

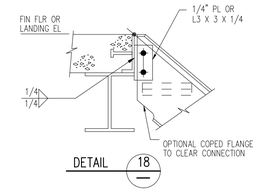

DETAIL 18

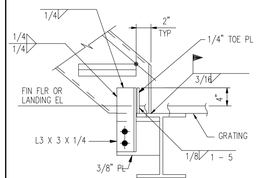

DETAIL 20

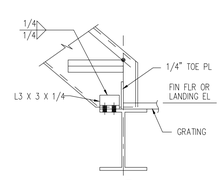

DETAIL 21

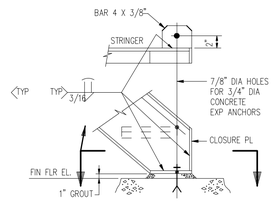

DETAIL 22

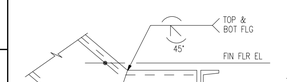

DETAIL 24

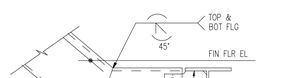

DETAIL 25

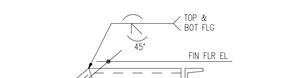

DETAIL 26

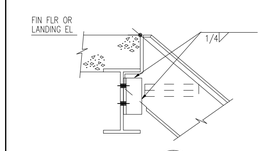

DETAIL 15

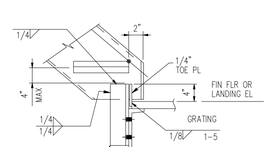

DETAIL 19

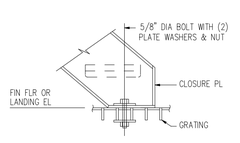

DETAIL 23

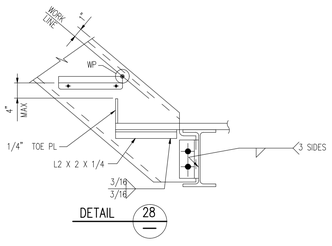

DETAIL 28

NOTES:

1. HEAD AND FOOT CONNECTION OF STAIR STRINGER TO BE SELECTED AS A PAIR GIVING CONSIDERATION TO STRINGER ERECTABILITY
2. FOR INFORMATION NOT SHOWN IN DETAILS '13' THRU '28' SEE DETAILS '12' & '22'.
3. SEE STANDARD DRAWING NO. 000-S0-0000-00001 FOR STANDARD BOLT AND HOLE SIZES.

STRINGER CONNECTIONS

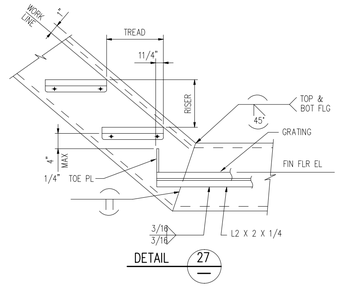

DETAIL 27

NO.	DATE	REVISIONS	BY	CHK	APPR
0	10/19/20	ISSUED FOR INFORMATION	KML	VS	VS

Owner

U. S. DEPARTMENT OF ENERGY, OFFICE OF FOSSIL ENERGY, NATIONAL ENERGY TECHNOLOGY LABORATORY

Contractor

BECHTEL NATIONAL, INC.

FEED STUDY FOR CARBON CAPTURE PLANT RETROFIT

STRUCTURAL STEEL SHEET TYPICAL SECTIONS AND DETAILS

Sheet Size	Scale
594 X 841 "A1"	AS SHOWN

JOB NO.	DRAWING NO.	REV.
26301	000-S0-0010-00003	0

Acknowledgment: This material is based upon work supported by the Department of Energy Award Number DE-FE0031848

Disclaimer: This report was prepared as an account of work sponsored by an agency of the United States Government. Neither the United States Government nor any agency thereof, nor any of their employees, makes any warranty, express or implied, or assumes any legal liability or responsibility for the accuracy, completeness, or usefulness of any information, apparatus, product, or process disclosed, or represents that its use would not infringe privately owned rights. Reference herein to any specific commercial product, process, or service by trade name, trademark, manufacturer, or otherwise does not necessarily constitute or imply its endorsement, recommendation, or favoring by the United States Government or any agency thereof. The views and opinions of authors expressed herein do not necessarily state or reflect those of the United States Government or any agency thereof.

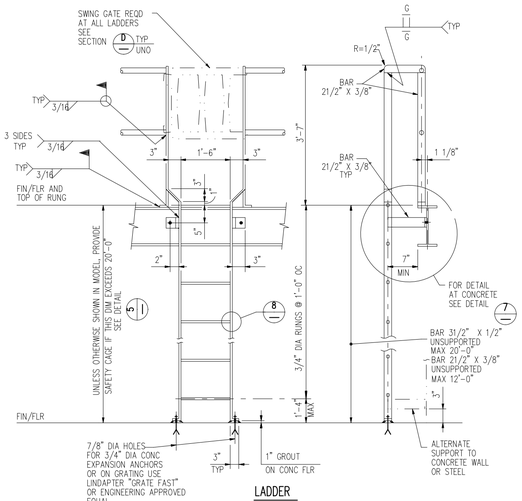

LADDER DETAIL 1
OR ENGINEERING APPROVED EQUAL

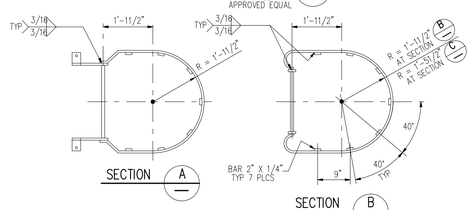

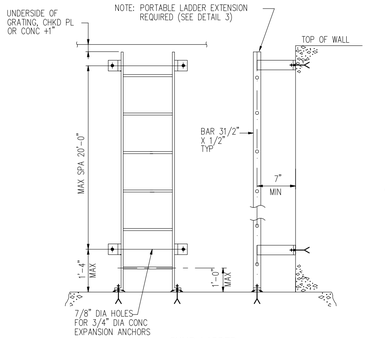

SUMP LADDER
FOR INFORMATION NOT SHOWN, SEE DETAIL 1

DETAIL 2
OR ENGINEERING APPROVED EQUAL

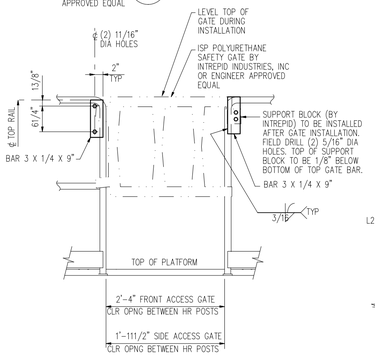

SECTION D

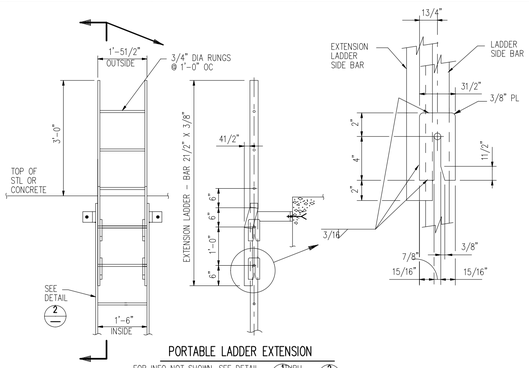

PORTABLE LADDER EXTENSION
FOR INFO NOT SHOWN, SEE DETAIL 1 THRU 2

DETAIL 3
OR ENGINEERING APPROVED EQUAL

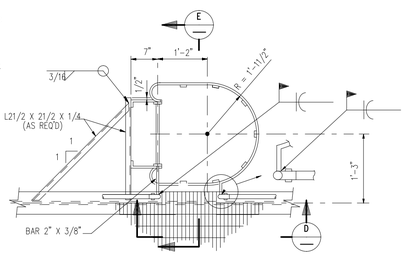

SIDE STEP LADDER
FOR INFO NOT SHOWN, SEE DETAIL 1 THRU 5

DETAIL 4
OR ENGINEERING APPROVED EQUAL

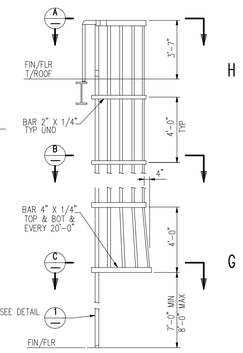

SAFETY CAGE

DETAIL 5
OR ENGINEERING APPROVED EQUAL

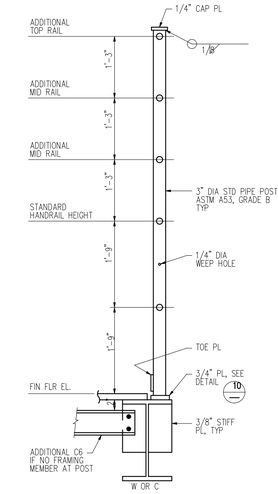

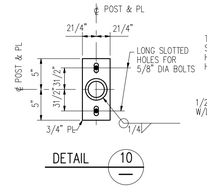

DETAIL 10
OR ENGINEERING APPROVED EQUAL

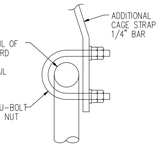

DETAIL 13
OR ENGINEERING APPROVED EQUAL

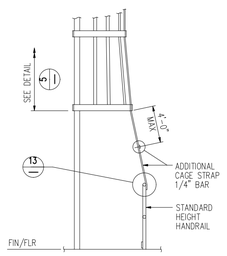

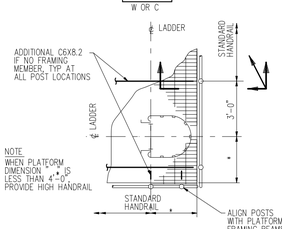

DETAIL 11
OR ENGINEERING APPROVED EQUAL

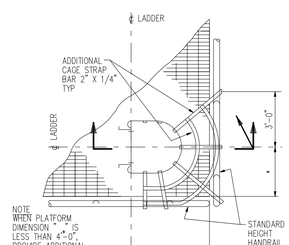

DETAIL 12
OR ENGINEERING APPROVED EQUAL

SAFETY PROVISIONS AT LADDERS

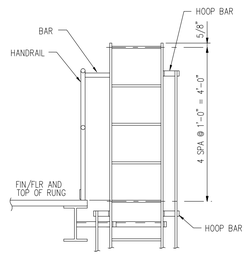

SECTION E

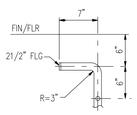

TOP CONDITION FOR LADDER UNDER HATCH

DETAIL 6
OR ENGINEERING APPROVED EQUAL

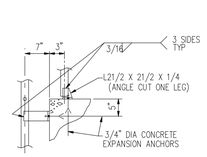

DETAIL 7
OR ENGINEERING APPROVED EQUAL

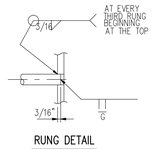

RUNG DETAIL

DETAIL 8
OR ENGINEERING APPROVED EQUAL

NO.	DATE	REVISIONS	BY	CHK	APPR
0	10/19/20	ISSUED FOR INFORMATION	KML	VS	VS

Owner
U. S. DEPARTMENT OF ENERGY, OFFICE OF FOSSIL ENERGY, NATIONAL ENERGY TECHNOLOGY LABORATORY

FEED STUDY FOR CARBON CAPTURE PLANT RETROFIT

STRUCTURAL STEEL SHEET
TYPICAL SECTIONS AND DETAILS

Contractor
BECHTEL NATIONAL, INC.

Sheet Size 594 X 841 "A1" | Scale AS SHOWN

JOB NO.	DRAWING NO.	REV.
26301	000-S0-0010-00004	0

Appendix S: Architectural Drawings

Conceptual Plan – Control/Workshop/ Store Building

- 26301-000-A1-3110-00001

Conceptual Plan - Flue Gas Blower Building

- 26301-000-A1-4810-00001

Conceptual Plan - Electrical Switchgear Building

- 26301-000-A1-6110-00001

Conceptual Plan - CO2 Compressor Building

- 26301-000-A1-6310-00001

Acknowledgment: This material is based upon work supported by the Department of Energy Award Number DE-FE0031848

Disclaimer: This report was prepared as an account of work sponsored by an agency of the United States Government. Neither the United States Government nor any agency thereof, nor any of their employees, makes any warranty, express or implied, or assumes any legal liability or responsibility for the accuracy, completeness, or usefulness of any information, apparatus, product, or process disclosed, or represents that its use would not infringe privately owned rights. Reference herein to any specific commercial product, process, or service by trade name, trademark, manufacturer, or otherwise does not necessarily constitute or imply its endorsement, recommendation, or favoring by the United States Government or any agency thereof. The views and opinions of authors expressed herein do not necessarily state or reflect those of the United States Government or any agency thereof.

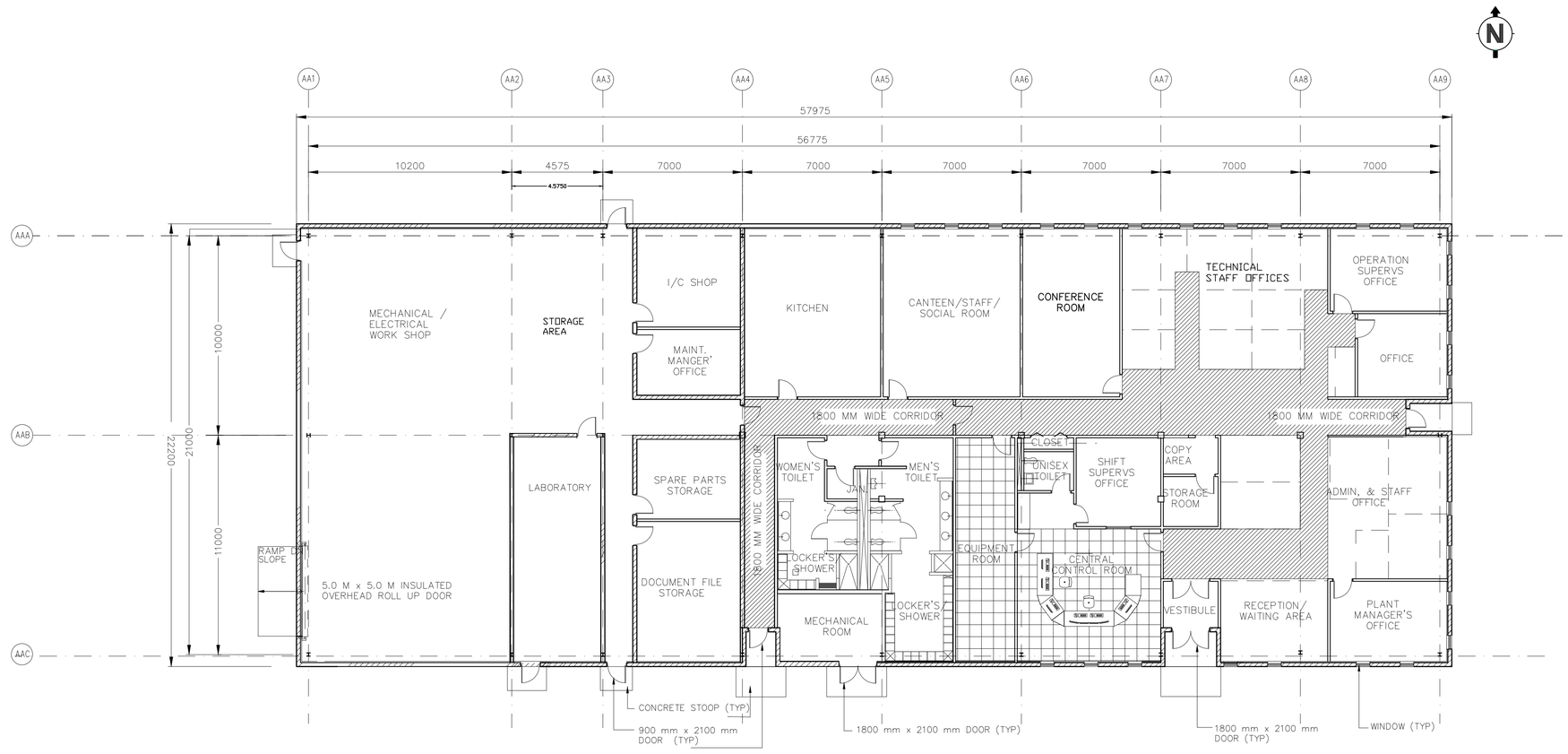

GROUND FLOOR PLAN

SCALE: 1:100

0 2 4 6 8 10M

NOTES:

1. ALL THE DIMENSIONS ARE IN MILLIMETER UNLESS NOTED OTHERWISE.
2. CODES USED FOR DESIGN

   INTERNATIONAL BUILDING CODE (IBC) 2018
   OCCUPANCY CLASSIFICATION PER IBC : BUSINESS 'B' and 'S'

   INTERNATIONAL PLUMBING CODE (IPC) 2018
3. ALL INTERIOR AND EXTERIOR SINGLE DOORS SHALL BE 900 mm WIDE BY 2100 mm HIGH UNLESS NOTED OTHERWISE. ALL DOUBLE DOORS SHALL BE 1800 mm WIDE BY 2100 mm HIGH FOR BOTH INTERIOR AND EXTERIOR DOORS UNLESS NOTED OTHERWISE.
4. ALL WINDOW SIZES SHALL BE AS INDICATED ON ELEVATION DRAWING.
5. LAB FURNITURE AND EQUIPMENT SHOWN ARE NOT PART OF CONTRACT AND SHALL BE PROVIDED BY OTHERS.

NO.	DATE	REVISIONS	BY	CHK	APPR
0	10/22/20	ISSUED FOR INFORMATION	KML	VS	VS

Owner
U. S. DEPARTMENT OF ENERGY, OFFICE OF FOSSIL ENERGY, NATIONAL ENERGY TECHNOLOGY LABORATORY

Contractor
BECHTEL NATIONAL, INC.

FEED STUDY FOR CARBON CAPTURE PLANT RETROFIT

CONCEPTUAL PLAN
CONTROL/WORKSHOP/LABORATORY

Sheet Size 594 X 841 "A1" | Scale AS SHOWN

JOB NO.	DRAWING NO.	REV.
26301	000-A1-3110-00001	0

Acknowledgment: This material is based upon work supported by the Department of Energy Award Number DE-FE0031648.
Disclaimer: This report was prepared as an account of work sponsored by an agency of the United States Government. Neither the United States Government nor any agency thereof, nor any of their employees, makes any warranty, express or implied, or assumes any legal liability or responsibility for the accuracy, completeness, or usefulness of any information, apparatus, product, or process disclosed, or represents that its use would not infringe privately owned rights. Reference herein to any specific commercial product, process, or service by trade name, trademark, manufacturer, or otherwise does not necessarily constitute or imply its endorsement, recommendation, or favoring by the United States Government or any agency thereof. The views and opinions of authors expressed herein do not necessarily state or reflect those of the United States Government or any agency thereof.

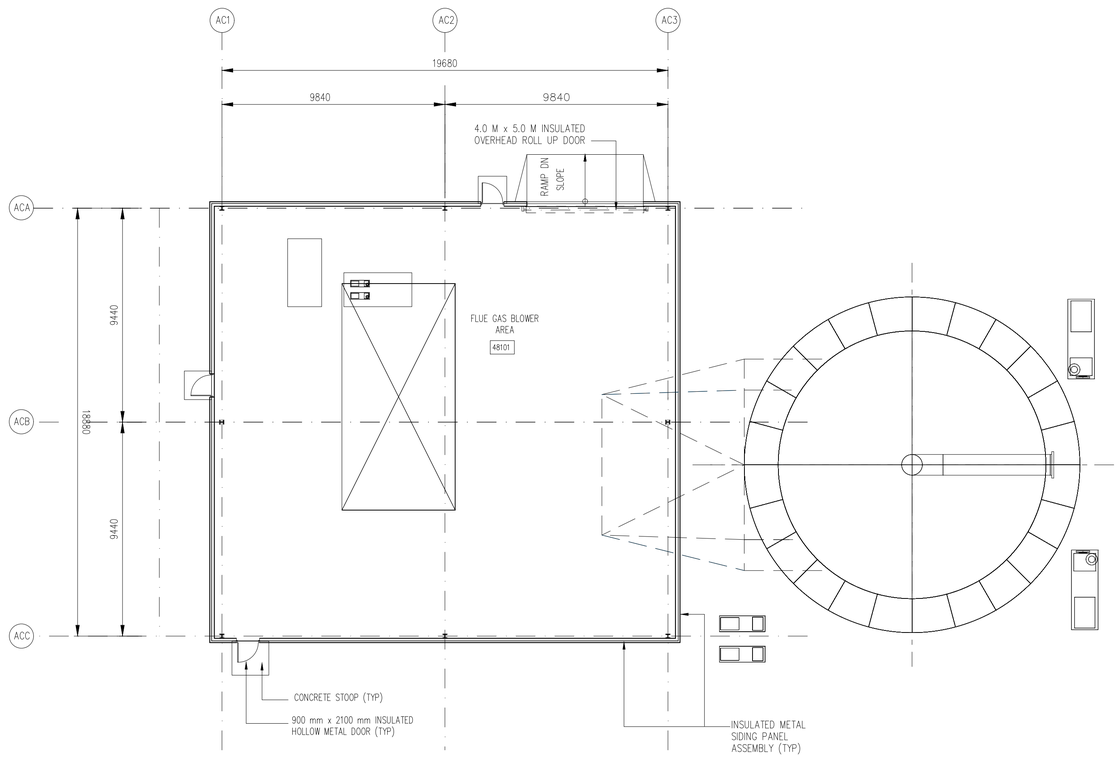

FLOOR PLAN

SCALE: 1:100



NOTES:

1. ALL THE DIMENSIONS ARE IN MILLIMETER UNLESS NOTED OTHERWISE.
2. CODES USED FOR DESIGN

   INTERNATIONAL BUILDING CODE (IBC) 2018
   OCCUPANCY CLASSIFICATION PER IBC: FACTORY AND INDUSTRIAL 'F1'
3. ALL INTERIOR AND EXTERIOR SINGLE DOORS SHALL BE 900 mm WIDE BY 2100 mm HIGH UNLESS NOTED OTHERWISE. ALL DOUBLE DOORS SHALL BE 1800 mm WIDE BY 2100 mm HIGH FOR BOTH INTERIOR AND EXTERIOR DOORS UNLESS NOTED OTHERWISE.

GRAPHIC SCALE:



SCALE: 1:100

NO.	DATE	REVISIONS	BY	CHK	APPR
0	10/19/20	ISSUED FOR INFORMATION	KML	VS	VS

Owner: U. S. DEPARTMENT OF ENERGY, OFFICE OF FOSSIL ENERGY, NATIONAL ENERGY TECHNOLOGY LABORATORY

Contractor: BECHTEL NATIONAL, INC.

FEED STUDY FOR CARBON CAPTURE PLANT RETROFIT

CONCEPTUAL PLAN
FLUE GAS BLOWER BUILDING

Sheet Size	Scale	
594 X 841 "A1"	AS SHOWN	
JOB NO.	DRAWING NO.	REV.
26301	000-A1-4810-00001	0

Acknowledgment: This material is based upon work supported by the Department of Energy Award Number DE-FE0031848

Disclaimer: This report was prepared as an account of work sponsored by an agency of the United States Government. Neither the United States Government nor any agency thereof, nor any of their employees, makes any warranty, express or implied, or assumes any legal liability or responsibility for the accuracy, completeness, or usefulness of any information, apparatus, product, or process disclosed, or represents that its use would not infringe privately owned rights. Reference herein to any specific commercial product, process, or service by trade name, trademark, manufacturer, or otherwise does not necessarily constitute or imply its endorsement, recommendation, or favoring by the United States Government or any agency thereof. The views and opinions of authors expressed herein do not necessarily state or reflect those of the United States Government or any agency thereof.

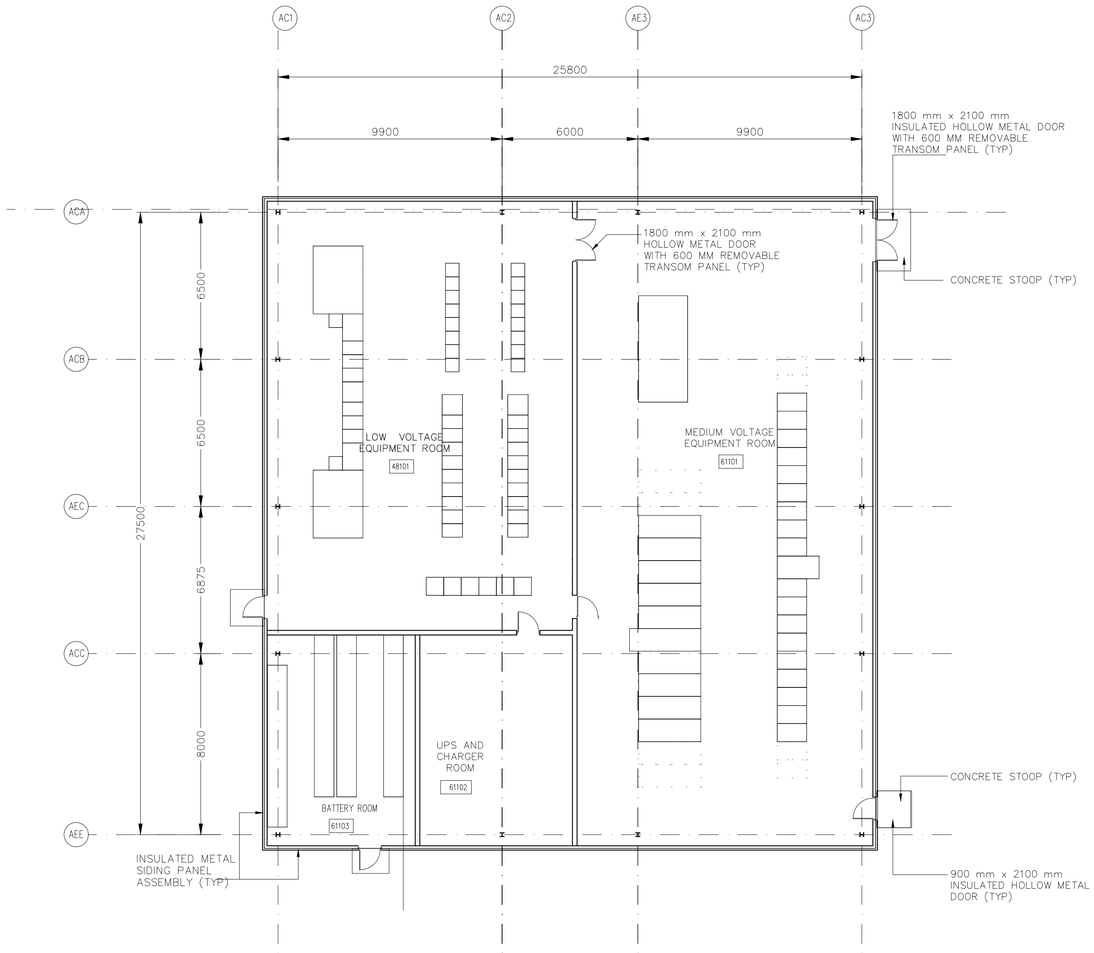

FLOOR PLAN
SCALE: 1:100

N

NOTES:

1. ALL THE DIMENSIONS ARE IN MILLIMETER UNLESS NOTED OTHERWISE.
2. CODES USED FOR DESIGN

   INTERNATIONAL BUILDING CODE (IBC) 2018
   OCCUPANCY CLASSIFICATION PER IBC: FACTORY AND INDUSTRIAL 'F1'
3. ALL INTERIOR AND EXTERIOR SINGLE DOORS SHALL BE 900 mm WIDE BY 2100 mm HIGH UNLESS NOTED OTHERWISE. ALL DOUBLE DOORS SHALL BE 1800 mm WIDE BY 2100 mm HIGH FOR BOTH INTERIOR AND EXTERIOR DOORS UNLESS NOTED OTHERWISE.

GRAPHIC SCALE:

0 2 4 6 8 10M

SCALE: 1:100

CONCEPTUAL PLAN
ELECTRICAL SWITCHGEAR BUILDING

NO.	DATE	REVISIONS	BY	CHK	APPR
0	10/19/20	ISSUED FOR INFORMATION	KML	VS	VS

Owner
U. S. DEPARTMENT OF ENERGY,
OFFICE OF FOSSIL ENERGY,
NATIONAL ENERGY
TECHNOLOGY LABORATORY

Contractor
BECHTEL NATIONAL, INC.

FEED STUDY FOR CARBON CAPTURE PLANT RETROFIT

CONCEPTUAL PLAN
ELECTRICAL SWITCHGEAR BUILDING

Sheet Size	Scale	
594 X 841 "A1"	AS SHOWN	
JOB NO.	DRAWING NO.	REV.
26301	000-A1-6110-00001	0

Acknowledgment: This material is based upon work supported by the Department of Energy Award Number DE-FE0031848

Disclaimer: This report was prepared as an account of work sponsored by an agency of the United States Government. Neither the United States Government nor any agency thereof, nor any of their employees, makes any warranty, express or implied, or assumes any legal liability or responsibility for the accuracy, completeness, or usefulness of any information, apparatus, product, or process disclosed, or represents that its use would not infringe privately owned rights. Reference herein to any specific commercial product, process, or service by trade name, trademark, manufacturer, or otherwise does not necessarily constitute or imply its endorsement, recommendation, or favoring by the United States Government or any agency thereof. The views and opinions of authors expressed herein do not necessarily state or reflect those of the United States Government or any agency thereof.

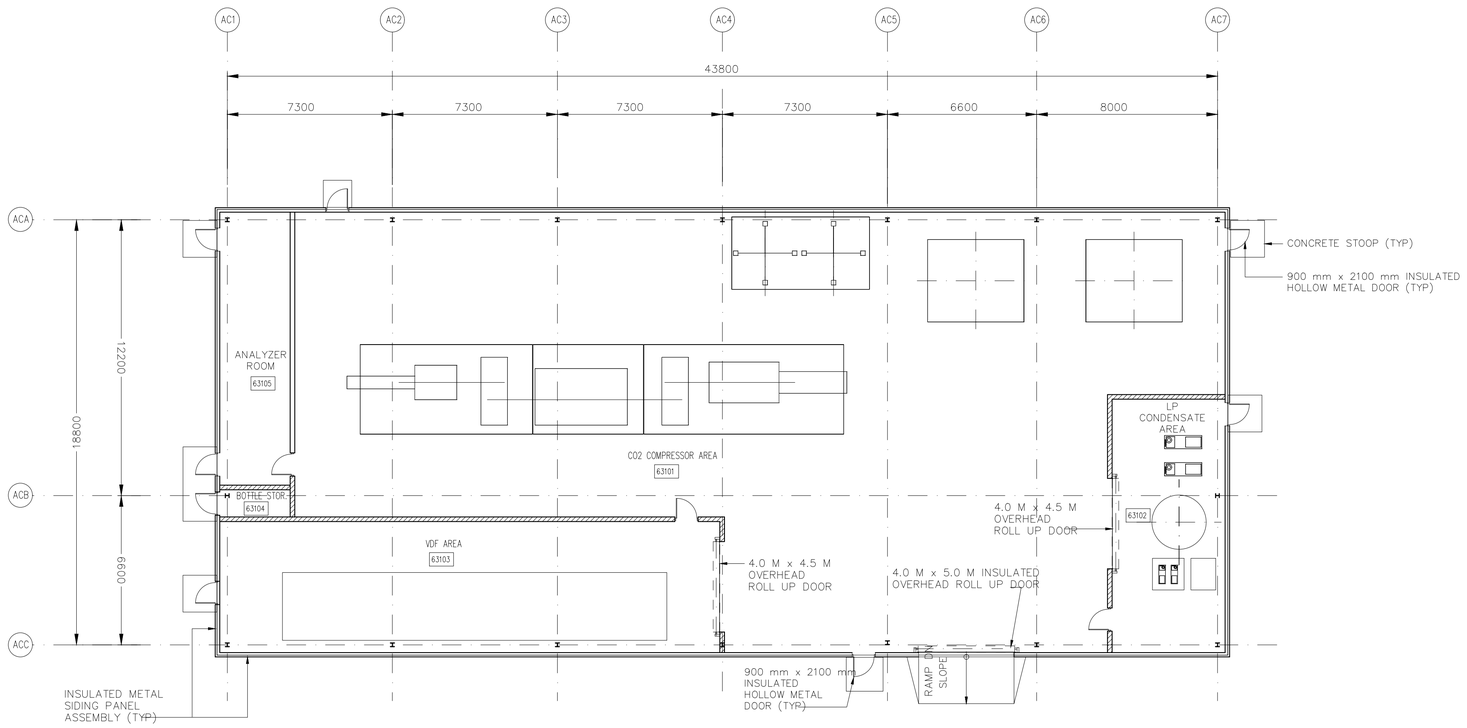

FLOOR PLAN

0 2 4 6 8 10M

NOTES:

1. ALL THE DIMENSIONS ARE IN MILLIMETER UNLESS NOTED OTHERWISE.
2. ALL INTERIOR AND EXTERIOR SINGLE DOORS SHALL BE 900 mm WIDE BY 2100 mm HIGH UNLESS NOTED OTHERWISE. ALL DOUBLE DOORS SHALL BE 1800 mm WIDE BY 2100 mm HIGH FOR BOTH INTERIOR AND EXTERIOR DOORS UNLESS NOTED OTHERWISE.

NO.	DATE	REVISIONS	BY	CHK	APPR
0	10/28/20	ISSUED FOR INFORMATION	KML	VS	VS

Owner
U. S. DEPARTMENT OF ENERGY, OFFICE OF FOSSIL ENERGY, NATIONAL ENERGY TECHNOLOGY LABORATORY

Contractor
BECHTEL NATIONAL, INC.

FEED STUDY FOR CARBON CAPTURE PLANT RETROFIT

CONCEPTUAL PLAN
CO2 COMPRESSOR BUILDING

Sheet Size 594 X 841 "A1" | Scale AS SHOWN

JOB NO.	DRAWING NO.	REV.
26301	000-A1-6310-00001	0

Appendix T: Soil Analysis

Soil Analysis for Sherman Carbon Capture Plant Retrofit in Grayson County, Texas

USDA and NRCS

USDA

General Soil Map of Sherman Power Plant's County - Grayson County, TX

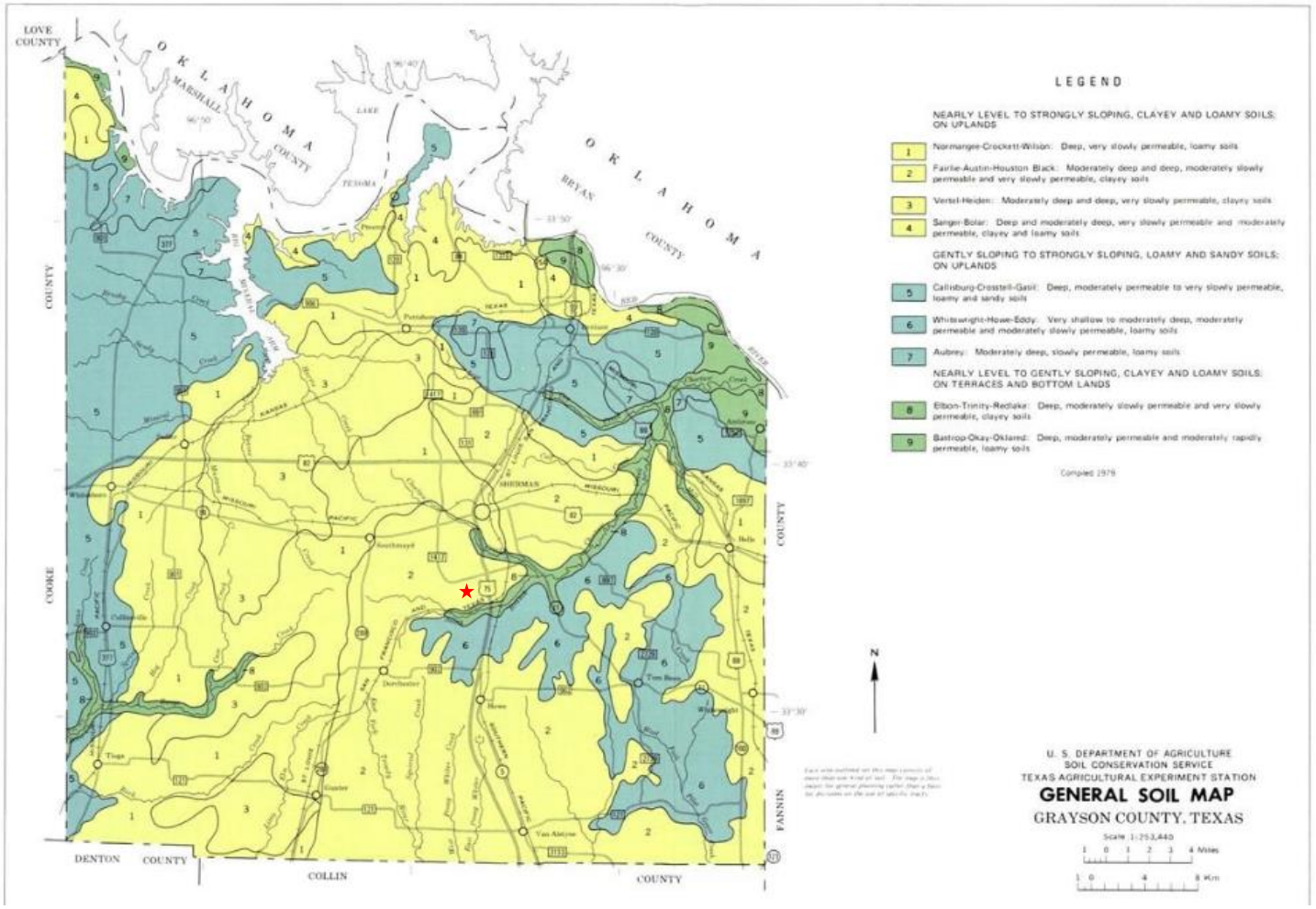

Figure 1. General Soil Map of Grayson County

Close Up:

Sherman Carbon Capture Plant will present Type 2 soils:
(Approximate location of Sherman Plant represented by red star)

- Moderately deep, deep, moderately slowly permeable, and very slowly permeable, clayey soils

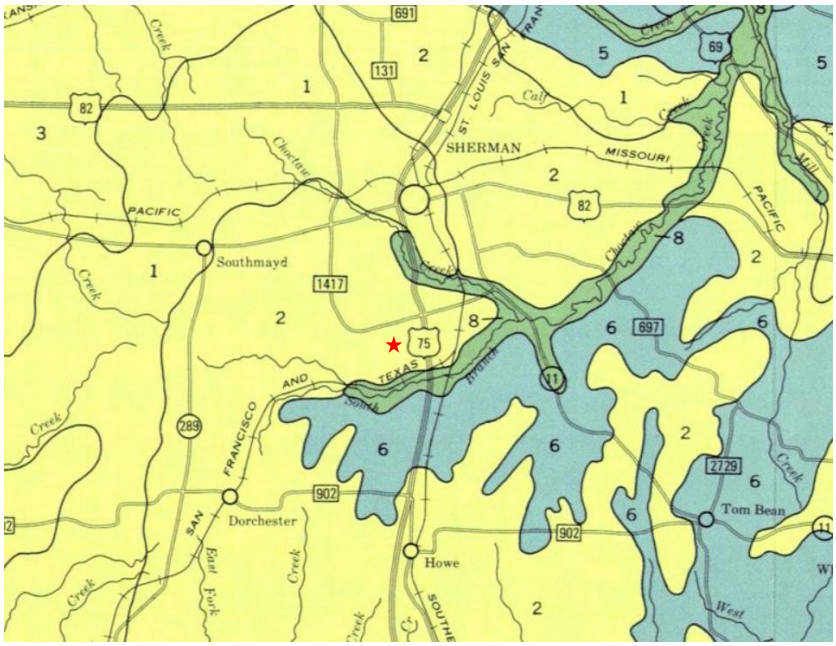

Figure 2. General Soil Map – Close-Up of Sherman Power Plant Area

NEARLY LEVEL TO STRONGLY SLOPING, CLAYEY AND LOAMY SOILS; ON UPLANDS

1 Normangee-Crockett-Wilson: Deep, very slowly permeable, loamy soils

2 Fairlie-Austin-Houston Black: Moderately deep and deep, moderately slowly permeable and very slowly permeable, clayey soils

3 Vertel-Heiden: Moderately deep and deep, very slowly permeable, clayey soils

4 Sanger-Bolar: Deep and moderately deep, very slowly permeable and moderately permeable, clayey and loamy soils

GENTLY SLOPING TO STRONGLY SLOPING, LOAMY AND SANDY SOILS; ON UPLANDS

5 Callisburg-Crosstell-Gasil: Deep, moderately permeable to very slowly permeable, loamy and sandy soils

6 Whitewright-Howe-Eddy: Very shallow to moderately deep, moderately permeable and moderately slowly permeable, loamy soils

7 Aubrey: Moderately deep, slowly permeable, loamy soils

NEARLY LEVEL TO GENTLY SLOPING, CLAYEY AND LOAMY SOILS; ON TERRACES AND BOTTOM LANDS

8 Elbon-Trinity-Redlake: Deep, moderately slowly permeable and very slowly permeable, clayey soils

9 Bastrop-Okay-Oklared: Deep, moderately permeable and moderately rapidly permeable, loamy soils

Figure 3. General Soil Map Legend

NRCS

Soil Map specific to Location of Carbon Capture Plant Retrofit to Sherman Power Plant

Carbon capture plant location will predominantly present Type 52 soils but could possibly present Types 33, 57, and 76 which are complex, well-drained clayey/loamy soils.

- **Type 52** – Normangee Clay Loams, 1 to 3 percent slopes
  - Moderately well drained. Runoff is slow to rapid; Permeability is very slow.
  - Clay content: 40 to 50 percent

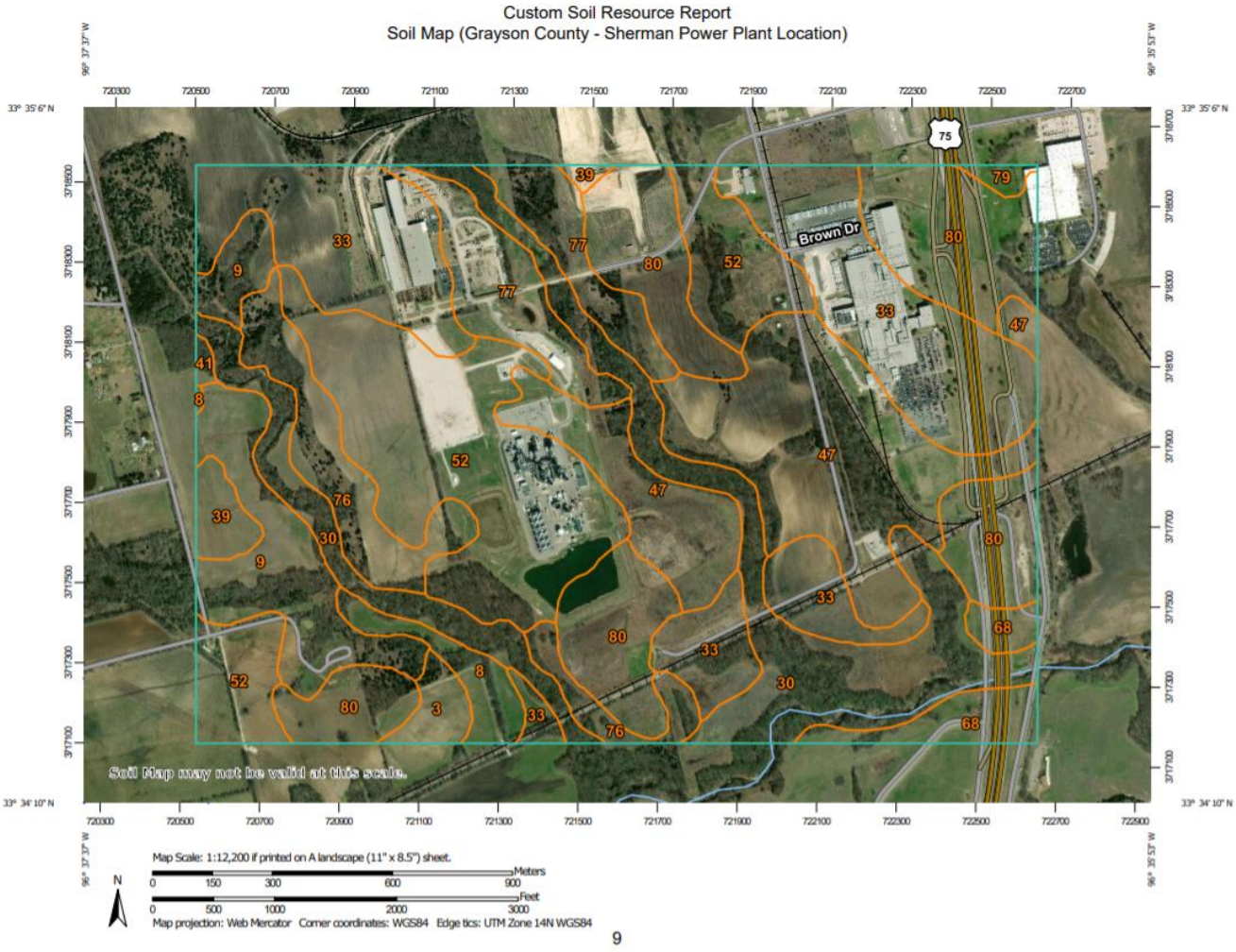

Figure 4. Soil Map for Sherman Power Plant Area

Map Unit Legend (Grayson County - Sherman Power Plant Location)

Map Unit Symbol	Map Unit Name	Acres in AOI	Percent of AOI
3	Altoga clay loam, 5 to 8 percent slopes	7.0	0.9%
8	Austin silty clay, 1 to 3 percent slopes	12.0	1.6%
9	Austin silty clay, 2 to 5 percent slopes, moderately eroded	47.4	6.3%
30	Elbon soils, frequently flooded	93.3	12.3%
33	Fairlie and Houston Black clays, 1 to 3 percent slopes	135.2	17.9%
39	Heiden clay, 1 to 3 percent slopes	8.5	1.1%
41	Howe silty clay loam, 5 to 8 percent slopes	1.2	0.2%
47	Lewisville silty clay, 3 to 5 percent slopes, eroded	110.6	14.6%
52	Normangee clay loam, 1 to 3 percent slopes	126.2	16.7%
68	Trinity clay, 0 to 1 percent slopes, occasionally flooded	16.9	2.2%
76	Whitewright-Eddy-Howe complex, 1 to 5 percent slopes	38.3	5.1%
77	Whitewright-Eddy-Howe complex, 5 to 12 percent slopes	44.0	5.8%
79	Wilson silty clay loam, 0 to 1 percent slopes	2.4	0.3%
80	Wilson silty clay loam, 1 to 3 percent slopes	114.0	15.1%
Totals for Area of Interest		**757.1**	**100.0%**

Figure 5. Legend for NRCS Soil Map

The proposed location of the Carbon Capture Plant retrofit to Sherman Power Plant, predominantly occupies Type 52 soil, a clay loam with low slopes. Area could potentially present alternate soils which all follow similar characteristics of clayey and loamy soils. Drainage is moderately well to well drained in the area which could support low erosion losses and sediment transport during rainy season in construction phase. Areas with higher percentages of clay could present higher sediment transport losses because of slower permeability. Information from the soil bores performed for Sherman Power Plant, could potentially provide the soil information needed for the Carbon Capture plant given the Power Plant is almost completely enclosed within a Type 52 soil area as well.

References

1. Texas History, USDA
   https://texashistory.unt.edu/ark:/67531/metapth130291/m1/1/zoom/?resolution=1&lat=1124.7875775723182&lon=1909.4800599964801
2. Soil Survey, NRCS
   https://websoilsurvey.sc.egov.usda.gov/WssProduct/hdwc14uwdv0j4qwkqnjgwuro/GN_00000/20200519_15501203262_66_Soil_Report.pdf

Appendix U: Process Water Flows within PCC

Appendix U
Process Water Flows within PCC

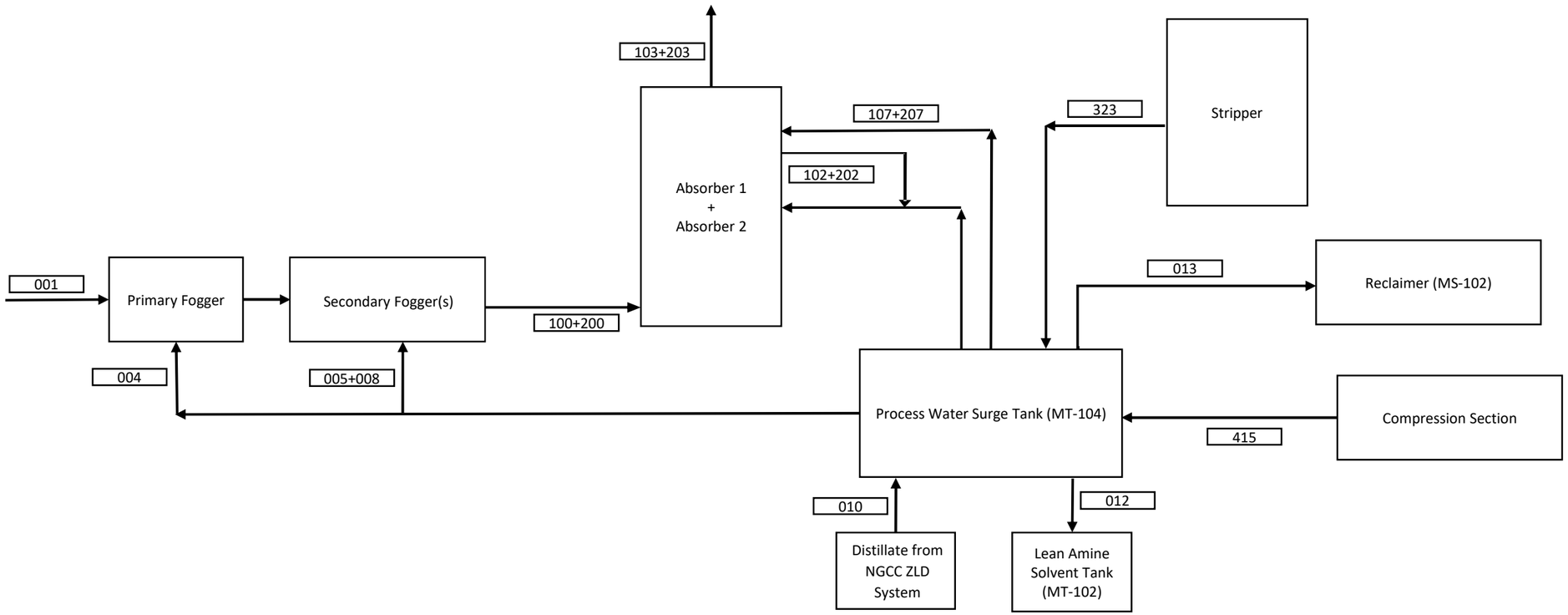

Stream No. / Case	001 Flue Gas from NGCC	004 Process Water to Foggers	005 Process Water to Foggers	008 Process Water to Foggers	010 Softened water from ZLD	012 Process Water to MT-102	013 Process Water to Reclaimer	100 + 200 Flue Gas to Absorber	103 + 203 Off Gas to Atmosphere	102 Excess Process Water (Abs. 1)	202 Excess Process Water (Abs. 2)	107 Water to Wash Water Section (Abs. 1)	207 Water to Wash Water Section (Abs. 2)	323 Reflux Purge	415 Compressor Inter-stage Liquid
Normal	-	50455.6	5500	5500	0.00	2830.5	899.6	-	-	40332.4	40332.4	5410.7	5410.7	73037.2	2970

Units = kg/hr of water

Appendix V: MEA Safety Data Sheet

THE DOW CHEMICAL COMPANY
SALES SPECIFICATION

Date Printed: 2020-06-12

Effective Date: 2018-09-17
Supersedes Date: 2015-04-23

Name: Monoethanolamine Iron and Chloride Free

Specification Number: 000000085615
Previous Specified Material: 00126504

Final Testing Requirements

Test and Test Condition	Limit	Unit	Method	Note
Monoethanolamine	99.5 Min	WT%	DOWM 102350	
Diethanolamine	0.2 Max	WT%	DOWM 102350	
Water	0.3 Max	WT%	ASTM E203	
Iron	0.5 Max	ppm wt	1B-17A-0.4	
Chlorides	1 Max	ppm wt	1B-17A-0.5	
Color, Pt-Co	15 Max		ASTM D5386	
Appearance	Pass		DOWM 101967	

External Notes

1 The following properties are not determined on shipment samples.
Typical values are: Specific Gravity at 20/20C = 1.0160 to 1.0190.

READ PRECAUTIONARY INFORMATION AND MATERIAL SAFETY SHEETS. THIS PRODUCT IS SHIPPED IN COMPLIANCE WITH APPLICABLE LAWS AND REGULATIONS REGARDING CLASSIFICATION, PACKAGING, SHIPPING AND LABELING.

LAST PAGE

® ™ Trademark of The Dow Chemical Company ("Dow") or an affiliated company of Dow

Appendix W: Not Used

Appendix X: Not Used

Appendix Y: MEA Suppliers List

Quantity Assumed for Quote:

- Initial Charge: 560 tons of ~100% MEA

1. **Nouryon** – Fort Worth, TX
   - Assay 99.5% (wt)
   - COA's show no contaminants
   - SDS, TDS and COA's on file
   - Offers MEA in ISO tanks from Sweden with lead time of 6 weeks
   - Pricing: $0.69/lb CIP to Sherman, TX
2. **Parchem** (Failed to quote)
   - Assay >99.0%
   - COA's show no contaminants
   - Spec and COA on file
   - SDS, and TDS pending
   - Failed to quote 560 MT
3. **BASF**
   - Assay >99.7% (wt)
   - SDS on file
   - TDS, and COA's pending
   - Offers MEA in ISO tanks from BASF SE with lead time of 8 weeks.
   - Minimum Order Quantity would be full container loads
   - Pricing $0.70/lb CIP to Sherman, TX
4. **DOW**
   - Assay >99.0%
   - SDS, TDS, Sales Specification (SS) on file
   - Iron and Chloride Free grade Amine available (Regular MEA grade also available)
   - Manufacturing in Seadrift, TX
   - Pricing $0.47/lb (Regular MEA Grade), $0.52/lb (Iron and Chloride Free Grade) CIP to Sherman, TX
   - Rail and truck delivery methods available for same price
5. **Brenntag**
   - Assay >=99.0%
   - SDS, TDS on file
   - COA's pending
   - Pricing: $0.59/# on full truckloads (45,000#) of MEA, CIP to Sherman, TX

Appendix Z: Stripper Energy Balance Comparisons

Stripper energy balance comparisons between Promax and Aspen CCSI models

This analysis was undertaken by Nexant prior to corrections to the Aspen 10 version of the CCSI modelling package for a programming problem and was considered to have affected absorber calculations only although significantly.

The stripper model assumed in this comparison is shown below in Figure Z-1 with parameters from the Kårstø FEED study report and those obtained for this exercise. This case is based on the use of 10 m of packing in the stripper; as shown in Table Z-1, only a slight reduction in energy consumption is predicted for the use of 20m of packing. Table Z-1 also shows the effect of the number of stages used in kinetic modelling for the stripper packing, suggesting that a sufficient number should be used to reach the point where the results are insensitive to discretization effects.

More significantly, Table Z-2 shows that, although overall regeneration energy requirements are similar, the apparent breakdown is significantly different between the Kårstø FEED study analysis and CCSI predictions. The Kårstø FEED study has a low heat of reaction but high stripping steam demand while the CCSI predictions in this exercise indicate a relatively high heat of reaction and low stripping steam demand.

Further analysis of apparent differences in detail between modelling packages is beyond the scope of this study. The trends observed do, however, confirm the importance of verifying performance using representative pilot tests. Such tests will also help to assess process model performance more objectively, if required.

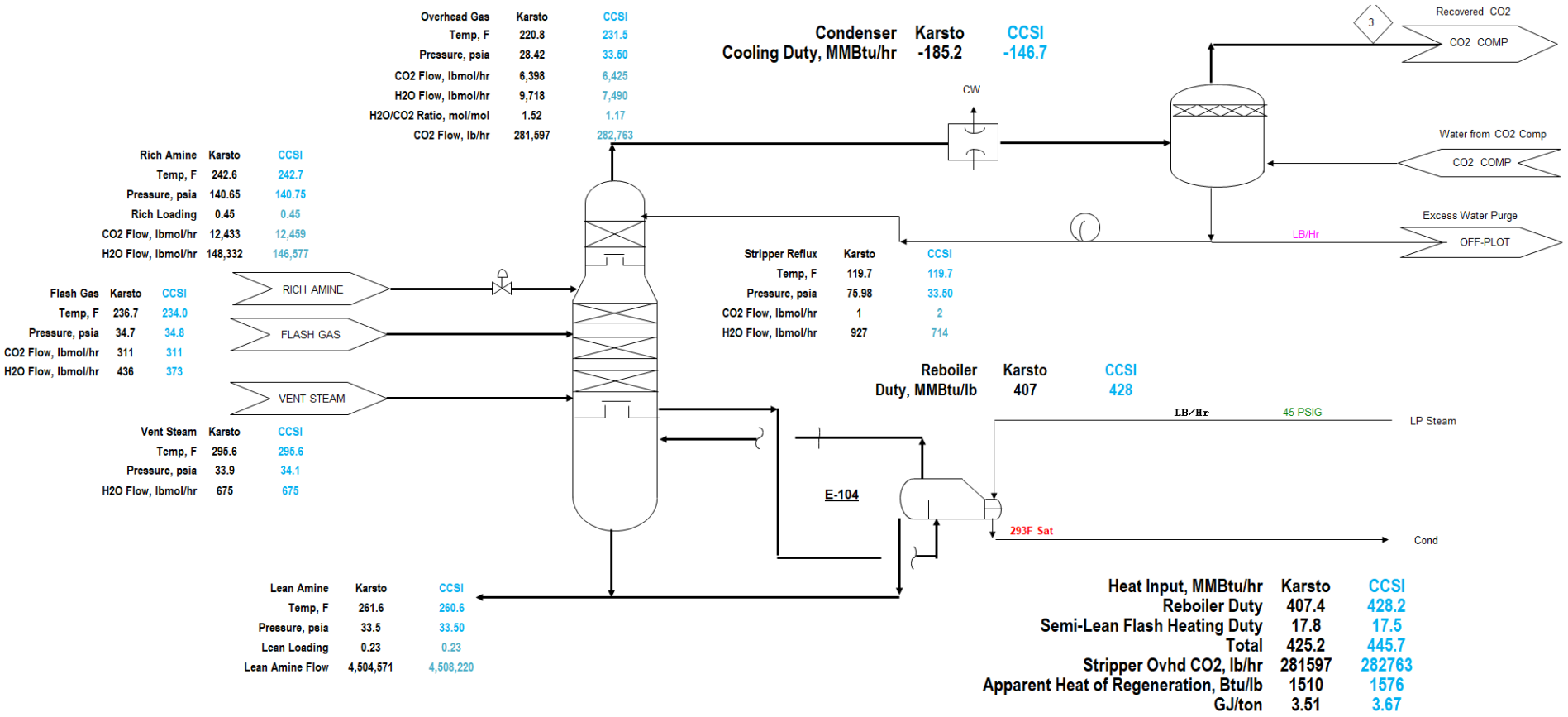

Figure Z-1 Nexant comparison of Promax and CCSI stripper heat and mass balances for 10m of stripper packing

	Karsto	CCSI-Rate Based		
ID, m	6.67	6.67	6.67	6.67
# of stages	10	10+1	5+1	5+1
Height, m	N/A	10	10	20
CO_2 regeneration, kmol/hr	2,902	2,915	2,914	2,915
Reboiler Duty, MW	119.4	122.0	125.5	124.5

Table Z-1 Comparison between RateFrac (rate-based) reboiler energy predictions for Kårstø FEED study conditions and CCSI predictions

	Karsto	Match Karsto Regen Rate CCSI
Steam In		
Vent Steam, lb/hr	12154.5	12154.5
Flash Gas, lb/hr	7851	6717
Rich Amine Flash, lb/hr	16608	17052
Total Steam In, lb/hr	36614	35924
Steam Out		
Stripper Overhead, lb/hr	175016	134903
Total Steam Out, lb/hr	175016	134903
Net Steam Vaporized, lb/hr	138402	98979
CO2 Vapor In		
Rich Amine Flash, lb/hr	38412.0	39178
Flash Gas, lb/hr	13696.7	13687
CO2 Vapor Out		
Stripper Overhead, lb/hr	281597	282763
Net CO2 Vapor Out	243185	243585
Steam Vaporization Duty, MMBtu/hr	130	93
Sensible Heat, MMBtu/hr	85	81
Reboiler Duty, MMBtu/hr	407	428
Heat of Reaction (by difference), MMBtu/hr	192	254
Heat of Reaction, Btu/lb CO2	788.0	1044.0
Heat of Reaction, GJ/ton CO2	1.83	2.43

Table Z-2 Stripper energy breakdown for Kårstø FEED study conditions and CCSI predictions

Appendix AA: R.R. Bottoms 1930 Patent

Dec. 2, 1930. R. R. BOTTOMS 1,783,901

PROCESS FOR SEPARATING ACIDIC GASES

Filed Oct. 7, 1930

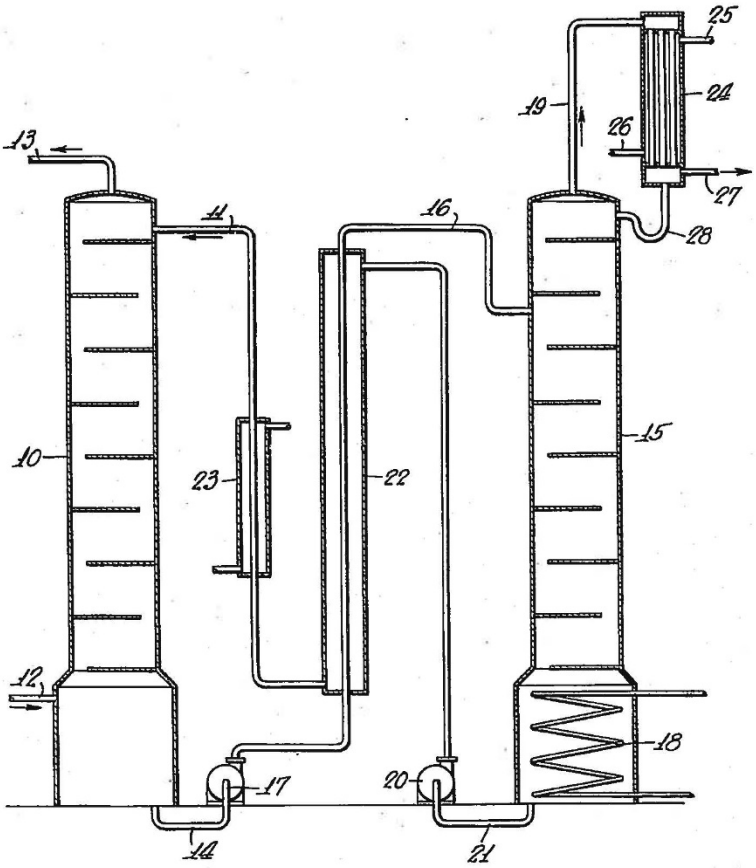

INVENTOR
Robert Roger Bottoms
BY
Dean Fountain Hirsch & Foster
ATTORNEYS

Patented Dec. 2, 1930 1,783,901

UNITED STATES PATENT OFFICE

ROBERT ROGER BOTTOMS, OF LOUISVILLE, KENTUCKY, ASSIGNOR TO THE GIRDLER CORPORATION, OF LOUISVILLE, KENTUCKY, A CORPORATION OF DELAWARE

PROCESS FOR SEPARATING ACIDIC GASES

REISSUED

Application filed October 7, 1930. Serial No. 486,918.

This application is a substitution for and continuation in part of my prior allowed application Serial No. 323,723, filed Dec. 4, 1928, allowed Sept. 26, 1930.

This invention relates to the separation of acidic gases from other gases or gaseous mixtures, by means of an absorbent agent. By the term "acidic gases" I mean those gases which in water solution have an acid reaction, but which are released unchanged upon sufficient heating of the water. Carbon dioxide, sulphur dioxide and hydrogen sulphide are the main gases of this type which are present in the gaseous mixtures commonly encountered in industrial operations.

The process may be employed for the separation and recovery of these acidic gases from the mixture, or may be employed to purify other gases by removal of said acidic gases therefrom.

The main objects of my invention are to facilitate the separation, effect complete or more nearly complete removal or recovery of said acidic gases, facilitate the regeneration of the absorbent agent, and to increase the rate of such regeneration. To secure these objects I employ an absorbent agent which, in comparison with the usual alkaline carbonates, such as sodium carbonate, has greater solubility and greater absorption capacity per unit of volume, whereby a smaller amount of the absorbent is needed and smaller and cheaper apparatus required for the treatment of a given volume of gas. I employ an absorbent agent which produces products with the acidic gases which are highly soluble and readily decomposed upon heating.

I have discovered that certain organic nitrogen compounds of the class known as amines may be employed for this purpose. An amine may be considered as an ammonia substitution compound in which one or more of the hydrogen atoms of the ammonia are replaced by a group containing carbon and hydrogen.

The use of this broad class of compounds in connection with an inorganic base has been suggested for this purpose and certain specific compounds have been suggested for removing certain specific gases, such an aniline for removing CS_2, and methylene blue and other dyestuffs for removing H_2S, with alternate oxidation and reduction solid hexamethylenetetramine for removing SO_2, but so far as I am aware it was not known prior to my invention that certain compounds forming a comparatively small group of the amines possessed the properties of chemically uniting with acidic gases at a comparatively low temperature range, giving up the gas in gaseous form at a higher temperature and at the same time becoming regenerated, and having a low vapor pressure during the absorption stage and also during the heating or gas liberating stage. The possession of these properties permits the absorption agent in liquid form to be circulated continuously in a closed cycle through the low temperature absorption and higher temperature regeneration stage, with comparatively slight loss of the absorbent agent, long life for the absorbent agent in circulation, minimizing of heat consumption through the use of heat interchangers, and the treatment of large volumes of gases for comparatively small volumes of the absorbent.

I have furthermore discovered that these properties are possessed only by these amines which have certain chemical characteristics as to arrangement of atoms and certain physical characteristics. The presence of oxygen in addition to nitrogen and hydrogen is not objectionable, but the oxygen must not be present in a carboxyl (COOH) group or a carbonyl (CO) group, although it may be present in a hydroxyl (OH) group. The amine must be either solid or liquid at ordinary room temperature, and must have a boiling point not substantially below 100° C. It must be soluble in water or other liquid which does not form a stable compound with the acidic gas or other gases associated therewith, and which has a boiling point not below the temperature of effective gas elimination.

The amines may be either primary, secondary to tertiary depending upon the number of hydrogen atoms of the ammonia which are replaced by carbon containing groups, and they may be either mono, di or tri-amines de-

pending upon the number of the amino groups involved.

The compound may contain an aliphatic amine group, that is, it may be an aliphatic amine in which the hydrocarbon group may comprise merely a straight chain which may be saturated or unsaturated, or an aliphatic group with an attached ring which may be saturated or unsaturated.

By the term "aliphatic amine" or "aliphatic amino group" I mean a compound in which the amino group (NH_2) is attached to a methylene group (CH_2). The methylene group may be attached to one or more aliphatic or straight chain groups, or may be attached to a saturated or unsaturated ring.

The following are examples of the aliphatic amino compounds which have the chemical and physical characteristics above referred to and which are useful in my process. I may use a primary monamine, such as hexylamine, or a secondary monamine, such as dipropylamine. Of the diamines I may employ propylene diamine or a tertiary diamine, such as trimethylene diamine. A triamine which may be employed is triaminopropane. Of the compounds which include an aliphatic amino group having a hydroxyl group I may employ monoethanolamine (aminoethyl alcohol), diethanolamine, triethanolamine, dihydroxypropylamine (glyceroamine), or diethylaminoethyl alcohol.

All of these have an aliphatic amino group, are all saturated compounds, all have a boiling point above 100° C., are all soluble in water, and they are either primary, secondary or tertiary, and either mono, di or tri-amines. None has a carboxyl or carbonyl group.

Of the aliphatic amines without ring compounds, but with hydroxyl groups, it is advantageous to use triethanolamine instead of either of the other two ethanolamines, namely, diethanolamine or monoethanolamine alone, because it has the higher boiling point, although triethanolamine as commercially manufactured and without careful purification, contains certain amounts of both the diethanolamine and the monoethanolamine. In referring to triethanolamine I therefore mean this compound either of ordinary purity or in its pure state in water solution.

As an example of an unsaturated aliphatic amine I may employ pentallyl dimethylamine.

As an example of an aliphatic amine of the type known as an alphyl amine and which has a carbon ring attached to the aliphatic amino group, I may employ benzylamine, phenylethylamine or methylphenylmethylamine.

Of the aliphatic amines in which there is a saturated or unsaturated ring attached to the aliphatic amino group, it is advantageous to use the benzylamine, because of its simplicity and cheapness of manufacture and the fact that it will absorb more of the acidic gas per unit of weight.

Aliphatic amines do not include compounds in which a separate unsaturated ring is the only group directly connected to the amino (NH_2) group. For instance, aniline is not useful in my process.

The nitrogen of the aliphatic amino group may be a member of a heterocyclic ring, but as the nitrogen of the amino group is attached to the carbon of an aliphatic group, these compounds may be properly classified as aliphatic amino compounds. Of such heterocyclic compounds having an aliphatic amino group are nicotine, piperidyl ethanol, piperidyl ethane, and pyrroline ethane. None of these compounds has a carbonyl or carboxyl group, although the piperidyl ethanol has a hydroxyl group. Of these compounds it is advantageous to use piperidyl ethanol.

Of the aliphatic amines which contain neither ring nor hydroxyl groups, it is most advantageous to use tripropylamine.

I may employ an amine in which the ring is directly connected to the amino group, but only in case the ring be saturated. To this group belong the amines of the cycloparaffins, such as cyclohexylamine, ethylcyclohexylamine, tetrahydro-ortho-toluidine, and cyclopentylamine. These cycloparaffin amines are all saturated compounds, contain no carbonyl or carboxyl groups, and have the desired physical characteristics.

Of the naphthene or cycloparaffin amines which do not contain an aliphatic group, but which contain a saturated ring, it is advantageous to use cyclohexylamine, although it will not absorb as much of the acidic gas as will triethanolamine because of the dissociation pressure of the produced compound which is higher. It has a lower molecular weight than the other two mentioned and absorbs more of the acidic gas per unit of volume than the other two.

I may also include certain hydrazines having the desired chemical and physical characteristics. These may be considered as amines in which one of the hydrogen atoms of the amino group (NH_2) is replaced by another NH_2 group. For instance, I may use ethylhydrazine or propylhydrazine which have an amino group attached to an aliphatic group and therefore properly designated as aliphatic amines.

In my copending application Serial No. 488,740, filed Oct. 15, 1930, I have claimed broadly the process of separating acidic gases by the use of a certain class of hydrazines including those above mentioned, and have more specifically claimed the use of certain hydrazines which do not include an aliphatic amino group.

The compounds above referred to which are soluble in water are advantageously employed in aqueous solution or in the presence

of water and may be employed either alone, of ordinary commercial purity, or two or more of the compounds may be used together in the same solution. Those which are not soluble in water or only soluble to a comparatively small extent may be used with some other liquid as the solvent and which does not have a boiling point below 100° C. For instance, as the solvent I may employ tetrahydronaphthalene which in itself does not chemically unite with the acidic gases.

All of the compounds above referred to will unite with acidic gases to form compounds which are comparatively stable and have a very low vapor pressure or dissociation pressure at atmospheric temperature and pressure. All such produced compounds are broken down by heat with the liberation of the acidic gas and the regeneration of the absorbent agent.

The compounds resulting from the chemical reaction with the acidic gases are comparatively unstable in a higher temperature range, for instance, in the vicinity of 100° C. In the process the carbon dioxide may be absorbed to the extent of forming either a carbonate or a bicarbonate and if the bicarbonate be formed the heating to effect dissociation may not drive off all of the carbon dioxide, but a portion may remain in the form of a carbonate. Therefore in referring to the various absorbent agents which may be employed I include not only the compounds named, but any carbonate which may be initially formed and thereafter serve as the absorbent for further carbon dioxide in the formation of a bicarbonate.

In all of these compounds the dissociation at the higher temperature results in the liberation of the acidic gas in gaseous form and the regeneration of the absorbent agent suitable for use in the absorption of further gas when cooled to the lower temperature.

As previously indicated, it is highly advantageous to use triethanolamine. This may be a viscous liquid, or in solution, for instance in water. I have discovered that this compound is easy to handle, has a negligible vapor pressure at 100° C., that is it is of low volatility so that there is the minimum of loss during absorption or regeneration, may be used at ordinary atmospheric conditions as to pressure and temperature, will effect complete removal or recovery of the carbon dioxide, sulphur dioxide or hydrogen sulphide or other acidic gases, has high viscosity which is conducive to a higher rate of absorption, may be regenerated at a comparatively high rate with minimum loss at steam temperature, and during regeneration gives up all or substantially all of the absorbed gas or gases. The compound is not caustic, and therefore is not harmful to use, and may be employed in processing equipment of ordinary materials. The removal of the gas is by actual chemical combination, and the regeneration restores the compound to its original form and composition. This absorbent agent is not decomposed at the temperature of regeneration, does not react with other gases ordinarily present in the industrial gases to be treated, has no objectionable odor, and does not impart any odor to the gases separated at the higher temperature or the stripped gases at the lower temperature.

The compounds which are formed with the acidic gases are comparatively stable at atmospheric temperature and the instability increases as the temperature rises, substantially all of the acidic gas being driven off at the boiling temperature of the liquid. The extent to which the absorbent agent is regenerated may vary in commercial practice depending upon the temperature in the regenerator and the time that the liquor is maintained in the high temperature range of the cycle.

The process may be carried out in various types of apparatus, and intermittently or continuously. In the accompanying drawing the single figure shows diagrammatically a vertical section through a form of apparatus which may be employed for a continuous process.

In this apparatus there is employed an absorber 10 which is preferably in the form of a column of suitable height and provided with baffles, pebbles, or other suitable filler, to effect reduced rate of flow and efficient contact of the down-flowing liquid and the up-flowing gas. Within the absorber is the absorbing agent, preferably triethanolamine in water solution. The absorbing agent is continuously delivered to the top of the absorber through a pipe 11, while the gas to be treated is delivered to the lower part through a pipe 12. The stripped gas is taken off from the top of the column through a pipe 13, while the absorbent, with the absorbed gases, is taken off from the bottom through a pipe 14.

In connection with the absorber there is employed a regenerator 15 which has suitable means for effecting intimate contact of the down-flowing absorbent agent carrying the absorbed gas and the up-flowing gas separated from the absorbent agent in the regenerator. The absorbent, carrying the absorbed gas, is conducted from the pipe 14 through a pipe 16, to the top of the regenerator, by means of a pump 17. In the bottom of the regenerator is a heating means, such for instance as a steam coil 18. The gas driven off from the absorbent agent in the regenerator is taken off from the top of the regenerator through a pipe 19, while a pump 20 withdraws the regenerated absorbent through a pipe 21 from the bottom of the regenerator and delivers it to the pipe 11 which leads to the top of the absorber. It is necessary that the temperature of the regenerator be higher than in the absorber. Thus it is

desirable to heat the liquid delivered through the pipe 16 and to cool the liquid delivered through the pipe 11. This may be accomplished by any suitable form of heat interchanger 22. The liquid flowing from the bottom of the regenerator through the pipe 12 flows through this heat interchanger in one direction, while the saturated absorbent from the bottom of the absorption column passes through the heat interchanger in the opposite direction to the upper part of the regenerator. The pipe 11 between the bottom of the heat interchanger and the top of the absorption column may be provided with an additional cooler 23.

In carrying out the process, the gas to be treated is delivered through the pipe 12, and passes up through the absorber. The carbon dioxide, sulphur dioxide, or hydrogen sulphide, is removed by the action of the triethanolamine, and the stripped gas passes out the pipe 13. The triethanolamine with the absorbed gas is removed through the pipe 14, heated by the heater 18 and interchanger 22, and delivered near the top of the regenerator. Within the latter apparatus the liquid trickles down through to the bottom and gives up the absorbed gas which later escapes through the pipe 19. A further portion of the absorbed gas is removed by the heating coil 18, and the regenerated absorbent is cooled in the heat interchanger 22 and cooler 23 and returned for reuse in the absorber. Thus the process is a continuous one.

In some cases or with some absorbent agents the liquid in the regenerator may be heated to such a temperature that a small portion of the solvent or the organic nitrogen compound may be vaporized. To prevent loss it is preferable to add a condenser at the top of the regenerator. I have shown somewhat conventionally a condenser 24 in which a cooling liquid, such as water, is circulated around a series of pipes between a supply pipe 25 and an outlet pipe 26. The cooled acidic gases leave the condenser through a pipe 27, while all condensate comprising either the solvent or the organic nitrogen compound or both is returned through a trap 28 to the top of the regenerator.

My improved process may be employed for treating a wide variety of gases. Merely as an example, stack gases may be treated for the recovery of the carbon dioxide contained therein, or gases from roasting furnaces may be treated to recover sulphur dioxide. In both such cases the treatment is for the recovery of the valuable constituents of waste gases. On the other hand, it may be used in treating natural gas, city gas, refinery gas, water gas or hydrogen, for the removal of carbon dioxide, sulphur dioxide, or other gases with acidic qualities, in order to purify the gases treated and render them better suited for the purposes for which they are to be employed.

Carbon dioxide may be removed from natural gas preparatory to extracting helium from the latter, or carbon dioxide may be removed from air preparatory to liquefaction of the latter and extraction of the oxygen. Where hydrogen is produced from coke, this hydrogen may be treated to remove such hydrogen sulphide as is often present in appreciable quantities and constitutes a very undesirable impurity of the hydrogen.

It will, of course, be obvious that the apparatus referred to is merely conventionally illustrated and may vary in detail through very wide limits and may embody suitable units of a character wellknown in the industry.

The size and capacity of the apparatus, as well as the nature of the means employed for effecting absorbing or regenerating action, may vary within comparatively wide limits, depending upon the character and volume of the gas treated and the percentage of the constituent which is to be removed. With triethanolamine in 50% water solution as the absorbing agent, steam serves as a suitable heating agent in the heating coil 18, while water of ordinary temperature may be employed in the cooler 23 and condenser 24. In some cases, and particularly with some other amino compounds, it may be desirable to heat to a higher temperature by means of superheated steam, and cool to a lower temperature by the action of brine, while with others less heating and less cooling is required. With triethanolamine no excessive heating or cooling action is required.

Due to the high rate of absorption and the high rate of regeneration, the columns of the absorber and regenerator may be made very much shorter than is possible when other materials such as alkalies or carbonates are used as the absorbing agents. Substantially complete regeneration may be obtained without either vigorous boiling or blowing with air, as is now required with some absorbing agents.

In my improved process it is neither necessary nor desirable to use any inorganic bases. Such bases may in some cases have a very deleterious effect upon the amine employed. In some cases the presence of a small amount of sodium carbonate or other such inorganic compound might not do any harm, but the addition would not, so far as I know, serve any useful purpose.

Having thus described my invention, what I claim as new and desire to secure by Letters Patent is:

1. The process of separating an acidic gas from gaseous mixtures, which includes effecting intimate contact of a gaseous mixture

with an absorbent agent in liquid form including an amine selected from the group consisting of aliphatic and cycloparaffin amines, and which is free from carboxyl or carbonyl groups, and which has a boiling point not substantially below 100° C.

2. The process of separating acidic gases from gaseous mixtures, which includes effecting intimate contact of the gaseous mixture with an absorbent in liquid form including an aliphatic amine which is free of carboxyl and carbonyl groups, and which has a boiling point not substantially below 100° C.

3. The process of separating acidic gases from gaseous mixtures, which includes effecting intimate contact of the gaseous mixture with an absorbent in liquid form including an amino alcohol which has a boiling point not substantially below 100° C.

4. The process of separating acidic gases from gaseous mixtures, which includes effecting intimate contact of the gaseous mixture with an absorbent in liquid form including an aliphatic amino alcohol which has a boiling point not substantially below 100° C.

5. The process of separating acidic gases from gaseous mixtures, which includes effecting intimate contact of the gaseous mixture with an absorbent in liquid form including an ethanolamine which has a boiling point not substantially below 100° C.

6. The process of separating carbon dioxide, sulphur dioxide or hydrogen sulphide, or other acidic gases from gaseous mixtures. which includes effecting intimate contact of the gaseous mixture with triethanolamine.

7. The process of separating acidic gases from gaseous mixtures, which includes effecting intimate contact of the gaseous mixture with an absorbent agent including triethanolamine, and thereafter heating said absorbent agent to separate therefrom the absorbed gases.

8. The process of treating a gaseous mixture, including carbon dioxide, sulphur dioxide, hydrogen sulphide, or other acidic gases, which includes circulating a water solution of triethanolamine in a closed cycle, passing the gaseous mixture to be treated in contact with said solution at one point in the cycle and heating the solution to remove the absorbed gases at another point in the cycle.

9. The process of separating acidic gases from gaseous mixtures, which includes effecting intimate contact of the gaseous mixture with an absorbent in liquid form including a cycloparaffin amine which is free of carboxyl and carbonyl groups, and which has a boiling point not substantially below 100° C.

10. The process of separating acidic gases from gaseous mixtures, which includes effecting intimate contact of the gaseous mixture with an absorbent in liquid form including cyclohexylamine.

11. The process of separating acidic gases from gaseous mixtures, which includes effecting intimate contact of the gaseous mixture with an absorbent in liquid form including a tertiary heterocyclic amine which is free of carboxyl and carbonyl groups, and which has a boiling point not substantially below 100° C.

12. The process of separating acidic gases from gaseous mixtures, which includes effecting intimate contact of the gaseous mixture with an absorbent in liquid form including a tertiary heterocyclic amino alcohol which has a boiling point not substantially below 100° C.

13. The process of separating acidic gases from gaseous mixtures, which includes effecting intimate contact of the gaseous mixture with an absorbent in liquid form including piperidyl ethanol.

Signed at New York, in the county of New York and State of New York this 3rd day of October A. D. 1930.

ROBERT ROGER BOTTOMS.

Appendix AB: Signal Exchange

Signal Exchange List

FEED STUDY FOR CARBON CAPTURE PLANT RETROFIT

Acknowledgment: This material is based upon work supported by the Department of Energy Award Number DE-FE0031848.
Disclaimer: This report was prepared as an account of work sponsored by an agency of the United States Government. Neither the United States Government nor any agency thereof, nor any of their employees, makes any warranty, express or implied, or assumes any legal liability or responsibility for the accuracy, completeness, or usefulness of any information, apparatus, product, or process disclosed, or represents that its use would not infringe privately owned rights. Reference herein to any specific commercial product, process, or service by trade name, trademark, manufacturer, or otherwise does not necessarily constitute or imply its endorsement, recommendation, or favoring by the United States Government or any agency thereof. The views and opinions of authors expressed herein do not necessarily state or reflect those of the United States Government or any agency thereof.

0	4/15/2021	Issued for Information	CB	VS	VS		
Rev.	**Date**	**Reason for Revision**	**BY**	**CHKD**	**APPD**		

Bechtel National, Inc.

Job No. 26301

Document No.	**Rev.**
26301–000–J0X-JD-00002	0

PAGE **1** of **9**

U. S. Department of Energy, Office of Fossil Energy, National Energy Technology Laboratory

Project No. – Originator – Disc Code – Doc Type – Serial No.

NOT USED

Contents

Section	Page
1.0 Introduction	3
2.0 Abbreviations	3
3.0 NGCC Signals	4
4.0 CO2 Transport & Storage Signals	7
5.0 F&G System Signals	8
6.0 Other Signals	9

1.0 INTRODUCTION

The signal exchange list for the PCC Plant includes those signals which are transmitted to/from the PCC Plant to systems outside the battery limit. This list is conceptual and will need to be discussed with the parties to which the system will be connected and revised further during the project detailed design phase.

2.0 ABBREVIATIONS

AI	Analog input
AO	Analog output
PCC	Post Combustion Capture
NGCC	Natural Gas Combined Cycle
CCTV	Closed Circuit Television
CO2	Carbon dioxide
CT	Combustion Turbine
DCS	Distributed Control System
DI	Digital input
DO	Digital output
ESD	Emergency Shutdown System (PCC Plant)
F&G	Fire & Gas Detection System (PCC Plant)
HRSG	Heat Recovery Steam Generator
IMS	Information Management System
PSD	Process Shutdown System (PCC Plant)

*The CO2 Transporter was not selected during this study. Tag numbers and appropriate signal exchanges shall be addressed during detailed design.

3.0 NGCC Signals

TAG NUMBER	DESCRIPTION	SIGNAL	FROM	TO	MEDIUM	SIGNAL LEVEL
(DETAIL DESIGN)	NGCC - COMBUSTION TURBINE TRIPPED	DI	NGCC	PSD	HARDWIRED I/O	24 VDC
(DETAIL DESIGN)	NGCC - COMBUSTION TURBINE TRIPPED	DI	NGCC	PSD	HARDWIRED I/O	24 VDC
(DETAIL DESIGN)	NGCC - COMBUSTION TURBINE TRIPPED	DI	NGCC	PSD	HARDWIRED I/O	24 VDC
(DETAIL DESIGN)	NGCC - COMBUSTION TURBINE RUNBACK IN PROGRESS - RATE 1	DI	NGCC	DCS	HARDWIRED I/O	24 VDC
(DETAIL DESIGN)	NGCC - COMBUSTION TURBINE RUNBACK IN PROGRESS - RATE 2	DI	NGCC	DCS	HARDWIRED I/O	24 VDC
(DETAIL DESIGN)	NGCC READY FOR CO2 CAPTURE PERMISSIVE	DI	NGCC	DCS	HARDWIRED I/O	24 VDC
(DETAIL DESIGN)	PCC FACILITY MAIN TRANSFORMER INCOMING BREAKER OPEN FDBK	DI	NGCC	DCS	ETHERNET	MODBUS OR PROFIBUS
(DETAIL DESIGN)	PCC FACILITY MAIN TRANSFORMER INCOMING BREAKER CLOSED FDBK	DI	NGCC	DCS	ETHERNET	MODBUS OR PROFIBUS
(DETAIL DESIGN)	PCC FACILITY MAIN TRANSFORMER INCOMING BREAKER TROUBLE	DI	NGCC	DCS	ETHERNET	MODBUS OR PROFIBUS
1-ES-ESI-0001AZSO	13.8KV SWGR PCC FACILITY TRANSFORMER BREAKER OPEN FDBK	DO	DCS	NGCC	ETHERNET	MODBUS OR PROFIBUS
1-ES-ESI-0001AZSC	13.8KV SWGR PCC FACILITY TRANSFORMER BREAKER CLOSED FDBK	DO	DCS	NGCC	ETHERNET	MODBUS OR PROFIBUS
1-ES-ESI-0001AXA	13.8KV SWGR PCC FACILITY TRANSFORMER BREAKER TROUBLE	DO	DCS	NGCC	ETHERNET	MODBUS OR PROFIBUS
(DETAIL DESIGN)	NGCC 4.16KV SWITCHGEAR BUS VOLTS PHASE A	AI	NGCC	DCS	ETHERNET	MODBUS OR PROFIBUS
(DETAIL DESIGN)	NGCC 4.16KV SWITCHGEAR BUS VOLTS PHASE B	AI	NGCC	DCS	ETHERNET	MODBUS OR PROFIBUS
(DETAIL DESIGN)	NGCC 4.16KV SWITCHGEAR BUS VOLTS PHASE C	AI	NGCC	DCS	ETHERNET	MODBUS OR PROFIBUS
(DETAIL DESIGN)	4.16KV INCOMING DEAD TIME TRANSFORMER BREAKER OPEN FDBK	DI	NGCC	DCS	ETHERNET	MODBUS OR PROFIBUS
(DETAIL DESIGN)	4.16KV INCOMING DEAD TIME TRANSFORMER BREAKER CLOSED FDBK	DI	NGCC	DCS	ETHERNET	MODBUS OR PROFIBUS
(DETAIL DESIGN)	4.16KV INCOMING DEAD TIME TRANSFORMER BREAKER TROUBLE	DI	NGCC	DCS	ETHERNET	MODBUS OR PROFIBUS
1-ES-ESI-0001BZSO	13.8KV SWGR DEAD TIME TRANSFORMER BREAKER OPEN FDBK	DO	DCS	NGCC	ETHERNET	MODBUS OR PROFIBUS
1-ES-ESI-0001BZSC	13.8KV SWGR DEAD TIME TRANSFORMER BREAKER CLOSED FDBK	DO	DCS	NGCC	ETHERNET	MODBUS OR PROFIBUS
1-ES-ESI-0001BXA	13.8KV SWGR DEAD TIME TRANSFORMER BREAKER TROUBLE	DO	DCS	NGCC	ETHERNET	MODBUS OR PROFIBUS
1-ES-ETP-0001JTA	PCC FACILITY TRANSFORMER WATTS	AO	DCS	NGCC	ETHERNET	MODBUS OR PROFIBUS
1-ES-ETP-0001JTR	PCC FACILITY TRANSFORMER VARS	AO	DCS	NGCC	ETHERNET	MODBUS OR PROFIBUS
1-ES-ETP-0001JQA	PCC FACILITY TRANSFORMER WATT-HOURS	AO	DCS	NGCC	ETHERNET	MODBUS OR PROFIBUS
1-ES-ETP-0001JQR	PCC FACILITY TRANSFORMER VAR-HOURS	AO	DCS	NGCC	ETHERNET	MODBUS OR PROFIBUS
1-ES-ETP-0002JTA	DEAD TIME TRANSFORMER WATTS	AO	DCS	NGCC	ETHERNET	MODBUS OR PROFIBUS
1-ES-ETP-0002JTR	DEAD TIME TRANSFORMER VARS	AO	DCS	NGCC	ETHERNET	MODBUS OR PROFIBUS
1-ES-ETP-0002JQA	DEAD TIME TRANSFORMER WATT-HOURS	AO	DCS	NGCC	ETHERNET	MODBUS OR PROFIBUS
1-ES-ETP-0002JQR	DEAD TIME TRANSFORMER VAR-HOURS	AO	DCS	NGCC	ETHERNET	MODBUS OR PROFIBUS
1-BA-AIT-0020C	PCC INLET CO2	AO	DCS	NGCC	ETHERNET	MODBUS OR PROFIBUS
1-BA-AIT-0022	PCC INLET CO2	AO	DCS	NGCC	ETHERNET	MODBUS OR PROFIBUS
1-BA-AIT-0118A	ABSORBER 1 OFF GAS NOX	AO	DCS	NGCC	ETHERNET	MODBUS OR PROFIBUS
1-BA-AIT-0118B	ABSORBER 1 OFF GAS NH3	AO	DCS	NGCC	ETHERNET	MODBUS OR PROFIBUS
1-BA-AIT-0118C	ABSORBER 1 OFF GAS H2O	AO	DCS	NGCC	ETHERNET	MODBUS OR PROFIBUS
1-BA-AIT-0118D	ABSORBER 1 OFF GAS CO2	AO	DCS	NGCC	ETHERNET	MODBUS OR PROFIBUS
1-BA-AIT-0122	ABSORBER 1 OFF GAS CO2	AO	DCS	NGCC	ETHERNET	MODBUS OR PROFIBUS
1-BA-AIT-0118E	ABSORBER 1 OFF GAS CO	AO	DCS	NGCC	ETHERNET	MODBUS OR PROFIBUS

3.0 NGCC Signals

TAG NUMBER	DESCRIPTION	SIGNAL	FROM	TO	MEDIUM	SIGNAL LEVEL
1-BA-AIT-0120	ABSORBER 1 OFF GAS O2	AO	DCS	NGCC	ETHERNET	
1-BA-AIT-0118F	ABSORBER 1 OFF GAS AMINE	AO	DCS	NGCC	ETHERNET	MODBUS OR PROFIBUS
1-BA-AIT-0218A	ABSORBER 2 OFF GAS NOX	AO	DCS	NGCC	ETHERNET	MODBUS OR PROFIBUS
1-BA-AIT-0218B	ABSORBER 2 OFF GAS NH3	AO	DCS	NGCC	ETHERNET	MODBUS OR PROFIBUS
1-BA-AIT-0218C	ABSORBER 2 OFF GAS H2O	AO	DCS	NGCC	ETHERNET	MODBUS OR PROFIBUS
1-BA-AIT-0218D	ABSORBER 2 OFF GAS CO2	AO	DCS	NGCC	ETHERNET	MODBUS OR PROFIBUS
1-BA-AIT-0222	ABSORBER 2 OFF GAS CO2	AO	DCS	NGCC	ETHERNET	MODBUS OR PROFIBUS
1-BA-AIT-0218E	ABSORBER 2 OFF GAS CO	AO	DCS	NGCC	ETHERNET	MODBUS OR PROFIBUS
1-BA-AIT-0220	ABSORBER 2 OFF GAS 02	AO	DCS	NGCC	ETHERNET	MODBUS OR PROFIBUS
1-BA-AIT-0218F	ABSORBER 2 OFF GAS AMINE	AO	DCS	NGCC	ETHERNET	MODBUS OR PROFIBUS
10-HNE10-CQ-0070	HRSG STACK NOX	AI	NGCC	DCS	ETHERNET	MODBUS OR PROFIBUS
10-HNE10-CQ-0020	HRSG STACK NH3	AI	NGCC	DCS	ETHERNET	MODBUS OR PROFIBUS
10-HNE10-CQ-0030	HRSG STACK H2O	AI	NGCC	DCS	ETHERNET	MODBUS OR PROFIBUS
10-HNE10-CQ-0050	HRSG STACK CO2	AI	NGCC	DCS	ETHERNET	MODBUS OR PROFIBUS
10-HNE10-CQ-0040	HRSG STACK CO	AI	NGCC	DCS	ETHERNET	MODBUS OR PROFIBUS
10-HNE10-CQ-0010	HRSG STACK 02	AI	NGCC	DCS	ETHERNET	MODBUS OR PROFIBUS
(DETAIL DESIGN)	CT OUTLET PRESSURE	AI	NGCC	DCS	ETHERNET	MODBUS OR PROFIBUS
1-BA-PIT-0006A	FLUE GAS DUCT INLET PRESSURE	AO	DCS	NGCC	ETHERNET	MODBUS OR PROFIBUS
1-BA-PIT-0006B	FLUE GAS DUCT INLET PRESSURE	AO	DCS	NGCC	ETHERNET	MODBUS OR PROFIBUS
1-BA-PIT-0006C	FLUE GAS DUCT INLET PRESSURE	AO	DCS	NGCC	ETHERNET	MODBUS OR PROFIBUS
1-BA-TE-0004	FLUE GAS DUCT INLET TEMPERATURE	AO	DCS	NGCC	ETHERNET	MODBUS OR PROFIBUS
10-HNE10-CT-0002	HRSG STACK TEMPERATURE	AI	NGCC	DCS	ETHERNET	MODBUS OR PROFIBUS
10-HNE10-CT-0002	HRSG STACK TEMPERATURE	AI	NGCC	DCS	ETHERNET	MODBUS OR PROFIBUS
1-BA-PV-0002ZI	DAMPER POSITION	AO	DCS	NGCC	HARDWIRED I/O	4 - 20 mA DC
1-BA-PV-0002ZSO	DAMPER OPEN POSITION SWITCH	DO	DCS	NGCC	HARDWIRED I/O	24 VDC
1-BA-PV-0002ZSC	DAMPER CLOSED POSITION SWITCH	DO	DCS	NGCC	HARDWIRED I/O	24 VDC
1-BA-HV-0008AZSO	PCC SHUTOFF DAMPER OPEN POSITION SWITCH	DO	DCS	NGCC	ETHERNET	MODBUS OR PROFIBUS
1-BA-HV-0008AZSC	PCC SHUTOFF DAMPER CLOSED POSITION SWITCH	DO	DCS	NGCC	HARDWIRED I/O	24 VDC
1-BA-HV-0008BZSO	PCC SHUTOFF DAMPER OPEN POSITION SWITCH	DO	DCS	NGCC	ETHERNET	MODBUS OR PROFIBUS
1-BA-HV-0008BZSC	PCC SHUTOFF DAMPER CLOSED POSITION SWITCH	DO	DCS	NGCC	HARDWIRED I/O	24 VDC
(DETAIL DESIGN)	COMBUSTION TURBINE LOAD (ACTUAL)	AI	NGCC	DCS	ETHERNET	MODBUS OR PROFIBUS
(DETAIL DESIGN)	COMBUSTION TURBINE LOAD (TARGET)	AI	NGCC	DCS	ETHERNET	MODBUS OR PROFIBUS
(DETAIL DESIGN)	COMBUSTION TURBINE OUTLET GAS FLOW	AI	NGCC	DCS	HARDWIRED I/O	4 - 20 mA DC
(DETAIL DESIGN)	COMBUSTION TURBINE OUTLET GAS FLOW	AI	NGCC	DCS	ETHERNET	MODBUS OR PROFIBUS
1-BA-FIT-0058	FLUE GAS DUCT FLOW	AO	DCS	NGCC	ETHERNET	MODBUS OR PROFIBUS
1-BA-FIT-0058	FLUE GAS DUCT FLOW	AO	DCS	NGCC	HARDWIRED I/O	4 - 20 mA DC
1-BA-FIT-0116	ABSORBER 1 OFF GAS FLOW	AO	DCS	NGCC	ETHERNET	MODBUS OR PROFIBUS
1-BA-FIT-0216	ABSORBER 2 OFF GAS FLOW	AO	DCS	NGCC	ETHERNET	MODBUS OR PROFIBUS
1-AB-FIT-0804	LP STEAM INLET FLOW	AO	DCS	NGCC	ETHERNET	MODBUS OR PROFIBUS
1-AB-FIT-0804FQ1	LP STEAM INLET FLOW (TOTALIZED)	AO	DCS	NGCC	ETHERNET	MODBUS OR PROFIBUS
1-AB-PIT-0800	LP STEAM INLET PRESSURE	AO	DCS	NGCC	ETHERNET	MODBUS OR PROFIBUS
1-AB-TE-0802	LP STEAM INLET TEMPERATURE	AO	DCS	NGCC	ETHERNET	MODBUS OR PROFIBUS
1-AB-HV-0806ZSC	LP STEAM INLET DRAIN VALVE CLOSED POSITION SWITCH	DO	DCS	NGCC	ETHERNET	MODBUS OR PROFIBUS
1-AB-HV-0808ZSC	LP STEAM INLET SHUTOFF VALVE CLOSED POSITION SWITCH	DO	DCS	NGCC	ETHERNET	MODBUS OR PROFIBUS
(DETAIL DESIGN)	LP STEAM PRESSURE AT NGCC	AI	NGCC	DCS	ETHERNET	MODBUS OR PROFIBUS

3.0 NGCC Signals

TAG NUMBER	DESCRIPTION	SIGNAL	FROM	TO	MEDIUM	SIGNAL LEVEL
(DETAIL DESIGN)	LP STEAM TEMPERATURE AT NGCC	AI	NGCC	DCS	ETHERNET	MODBUS OR PROFIBUS
1-AB-FIT-0904	MP STEAM INLET FLOW	AO	DCS	NGCC	ETHERNET	MODBUS OR PROFIBUS
1-AB-FIT-0904FQI	MP STEAM INLET FLOW (TOTALIZED)	AO	DCS	NGCC	ETHERNET	MODBUS OR PROFIBUS
1-AB-PIT-0900	MP STEAM INLET PRESSURE	AO	DCS	NGCC	ETHERNET	MODBUS OR PROFIBUS
1-AB-TE-0902	MP STEAM INLET TEMPERATURE	AO	DCS	NGCC	ETHERNET	MODBUS OR PROFIBUS
1-AB-HV-0908ZSC	MP STEAM INLET SHUTOFF VALVE CLOSED POSITION SWITCH	DO	DCS	NGCC	ETHERNET	MODBUS OR PROFIBUS
(DETAIL DESIGN)	MP STEAM PRESSURE AT NGCC	AI	NGCC	DCS	ETHERNET	MODBUS OR PROFIBUS
(DETAIL DESIGN)	MP STEAM TEMPERATURE AT NGCC	AI	NGCC	DCS	ETHERNET	MODBUS OR PROFIBUS
1-SC-FIT-1028	LP CONDENSATE RETURN FLOW	AO	DCS	NGCC	ETHERNET	MODBUS OR PROFIBUS
1-SC-FIT-1028FQI	LP CONDENSATE RETURN FLOW (TOTALIZED)	AO	DCS	NGCC	ETHERNET	MODBUS OR PROFIBUS
1-SC-TE-1026	LP CONDENSATE RETURN TEMPERATURE	AO	DCS	NGCC	ETHERNET	MODBUS OR PROFIBUS
1-SC-LV-1030AZI	LP CONDENSATE RETURN CONTROL VALVE POSITION	AO	DCS	NGCC	ETHERNET	MODBUS OR PROFIBUS
1-SC-HV-1032ZSC	LP CONDENSATE RETURN SHUTOFF VALVE POSITION	DO	DCS	NGCC	ETHERNET	MODBUS OR PROFIBUS
1-SC-AIT-1034	LP CONDENSATE RETURN CONDUCTIVITY	AO	DCS	NGCC	ETHERNET	MODBUS OR PROFIBUS
1-SC-AIT-1036	LP CONDENSATE RETURN DISSOLVED 02	AO	DCS	NGCC	ETHERNET	MODBUS OR PROFIBUS
1-SC-AIT-1038	LP CONDENSATE RETURN PH	AO	DCS	NGCC	ETHERNET	MODBUS OR PROFIBUS
1-SC-AIT-1040	LP CONDENSATE RETURN SILICA	AO	DCS	NGCC	ETHERNET	MODBUS OR PROFIBUS

4.0 CO2 Transport & Storage Signals*

TAG NUMBER	DESCRIPTION	SIGNAL	FROM	TO	MEDIUM	SIGNAL LEVEL
(DETAIL DESIGN)	CO2 PIPELINE TROUBLE	DI	CO2 TRANSPORTER	PSD	HARDWIRED I/O	24 VDC
(DETAIL DESIGN)	CO2 PIPELINE TROUBLE	DI	CO2 TRANSPORTER	PSD	HARDWIRED I/O	24 VDC
(DETAIL DESIGN)	CO2 PIPELINE TROUBLE	DI	CO2 TRANSPORTER	PSD	HARDWIRED I/O	24 VDC
(DETAIL DESIGN)	CO2 PIPELINE READY FOR CO2 PRODUCT PERMISSIVE	DI	CO2 TRANSPORTER	DCS	HARDWIRED I/O	24 VDC
(DETAIL DESIGN)	CO2 PRODUCT FLOW TO PIPELINE	AO	DCS	CO2 TRANSPORTER	ETHERNET	MODBUS OR PROFIBUS
(DETAIL DESIGN)	CO2 PRODUCT SENDOUT PUMP DISCHARGE PRESSURE	AO	DCS	CO2 TRANSPORTER	ETHERNET	MODBUS OR PROFIBUS
(DETAIL DESIGN)	CO2 PIPELINE INLET PRESSURE	AO	DCS	CO2 TRANSPORTER	ETHERNET	MODBUS OR PROFIBUS
(DETAIL DESIGN)	CO2 PRODUCT TEMPERATURE	AO	DCS	CO2 TRANSPORTER	ETHERNET	MODBUS OR PROFIBUS
(DETAIL DESIGN)	CO2 PRODUCT TO PIPELINE CONTROL VALVE POSITION	AO	DCS	CO2 TRANSPORTER	ETHERNET	MODBUS OR PROFIBUS
(DETAIL DESIGN)	CO2 PRODUCT TO PIPELINE SHUTOFF VALVE OPEN POSITION SWITCH	DO	DCS	CO2 TRANSPORTER	ETHERNET	MODBUS OR PROFIBUS
(DETAIL DESIGN)	CO2 PRODUCT TO PIPELINE SHUTOFF VALVE CLOSED POSITION SWITCH	DO	DCS	CO2 TRANSPORTER	ETHERNET	MODBUS OR PROFIBUS

* These are recommended signals, but the final list should be prepared during the detail design after discussion with the CO2 transporter.

5.0 F&G System Signals*

TAG NUMBER	DESCRIPTION	SIGNAL	FROM	TO	MEDIUM	SIGNAL LEVEL
(DETAIL DESIGN)	COMBUSTIBLE GAS ALARM FROM CO2 TRANSPORTER	DI	CO2 TRANSPORTER	F&G	HARDWIRED I/O	24 VDC
(DETAIL DESIGN)	COMBUSTIBLE GAS ALARM FROM CO2 TRANSPORTER	DI	CO2 TRANSPORTER	F&G	HARDWIRED I/O	24 VDC
1-PF-XA-0005A	TOXIC GAS ALARM FROM NGCC	DI	NGCC	F&G	HARDWIRED 110	24 VDC
1-PF-XA-0005B	TOXIC GAS ALARM FROM NGCC	DI	NGCC	F&G	HARDWIRED I/O	24 VDC
(DETAIL DESIGN)	TOXIC GAS ALARM FROM CO2 TRANSPORTER	DI	CO2 TRANSPORTER	F&G	HARDWIRED I/O	24 VDC
(DETAIL DESIGN)	TOXIC GAS ALARM FROM CO2 TRANSPORTER	DI	CO2 TRANSPORTER	F&G	HARDWIRED I/O	24 VDC
1-PF-XA-0008A	FIRE ALARM FROM NGCC	DI	NGCC	F&G	HARDWIRED I/O	24 VDC
1-PF-XA-0008B	FIRE ALARM FROM NGCC	DI	NGCC	F&G	HARDWIRED I/O	24 VDC
(DETAIL DESIGN)	FIRE ALARM FROM CO2 TRANSPORTER	DI	CO2 TRANSPORTER	F&G	HARDWIRED I/O	24 VDC
(DETAIL DESIGN)	FIRE ALARM FROM CO2 TRANSPORTER	DI	CO2 TRANSPORTER	F&G	HARDWIRED I/O	24 VDC
1-PF-XY-0002A	COMBUSTIBLE GAS ALARM TO NGCC	DO	F&G	NGCC	HARDWIRED I/O	24 VDC
1-PF-XY-0002B	COMBUSTIBLE GAS ALARM TO NGCC	DO	F&G	NGCC	HARDWIRED I/O	24 VDC
(DETAIL DESIGN)	COMBUSTIBLE GAS ALARM TO CO2 TRANSPORTER	DO	F&G	CO2 TRANSPORTER	HARDWIRED I/O	24 VDC
(DETAIL DESIGN)	COMBUSTIBLE GAS ALARM TO CO2 TRANSPORTER	DO	F&G	CO2 TRANSPORTER	HARDWIRED I/O	24 VDC
1-PF-XY-0005A	TOXIC GAS ALARM TO NGCC	DO	F&G	NGCC	HARDWIRED I/O	24 VDC
1-PF-XY-0005B	TOXIC GAS ALARM TO NGCC	DO	F&G	NGCC	HARDWIRED I/O	24 VDC
(DETAIL DESIGN)	TOXIC GAS ALARM TO CO2 TRANSPORTER	DO	F&G	CO2 TRANSPORTER	HARDWIRED I/O	24 VDC
(DETAIL DESIGN)	TOXIC GAS ALARM TO CO2 TRANSPORTER	DO	F&G	CO2 TRANSPORTER	HARDWIRED I/O	24 VDC
1-PF-XY-0008A	FIRE ALARM TO NGCC	DO	F&G	NGCC	HARDWIRED I/O	24 VDC
1-PF-XY-0008B	FIRE ALARM TO NGCC	DO	F&G	NGCC	HARDWIRED I/O	24 VDC
(DETAIL DESIGN)	FIRE ALARM TO CO2 TRANSPORTER	DO	F&G	CO2 TRANSPORTER	HARDWIRED I/O	24 VDC
(DETAIL DESIGN)	FIRE ALARM TO CO2 TRANSPORTER	DO	F&G	CO2 TRANSPORTER	HARDWIRED I/O	24 VDC

6.0 Other Signals*

TAG NUMBER	DESCRIPTION	SIGNAL	FROM	TO	MEDIUM	SIGNAL LEVEL
(DETAIL DESIGN)	CCTV INTERFACE TO/FROM NGCC	N/A	CCTV	NGCC	ETHERNET	CCTV
(DETAIL DESIGN)	CCTV INTERFACE TO/FROM CO2 TRANSPORT & STORAGE	N/A	CCTV	CO2 TRANSPORTER	ETHERNET	CCTV
(DETAIL DESIGN)	IMS INTERFACE TO CO2 TRANSPORTER LAN	N/A	IMS	CO2 TRANSPORTER	ETHERNET	TCP/IP

Appendix AC: Capture Plant Cost Breakdown

1.0 Objective

This appendix provides brief overview of the methodology used for developingthe cost estimate that is provided in Chapter 16. It also provides the bulk quantities used as well as the raw data for major equipment capital cost.

2.0 Execution Plan

Below are the key topics that were addressed as part of this estimate. Note thatthis project would be executed by a private entity/developer.

2.1 Engineering

- Design and detailed engineering will all be self-performed
- Office split will be 80% US, 20% UK

2.2 Construction

- Construction activities will be direct hire (w/ specialty subcontracts such as pre- engineered buildings), open shop.
- Work week and shift work assumptions: 4-10s + 1-8 for a total of 48 hours, singleshift, plus casual OT.
- Incentives will be similar to Sherman Combined Cycle due to location of site. (perdiem assumed for 60% of craft)
- Fab Yard will be developed for major vessels (Fabrication on site by suppliers).
- Tent Warehouse included
- Critical outage work will consist of circulating water/cooling water pipe, steam pipe, stack, and substation tie-ins.
- In addition, it is assumed all work within the boundaries of the active power plant will require additional coordination, training, etc.; this has been addressed as a craft unit rate adjustment.

2.3 Supply Chain (Procurement and Contracts)

- Due to site location being 200+ miles away from nearest water way access, sizes of shipped components have been limited to a "normal" road permit size of L 50' x W8'6" x H 14'. The CO_2 Stripper, Absorbers, and some of the ductwork will therefore ship in smaller prefabricated pieces and fabrication will be completed in the Fab Yard on site; the amine reclaimer will be skid mounted and interconnected on site.
- Critical / long lead equipment on or near the critical path - CO_2 compressor, CO_2 stripper, absorbers, and the existing plant tie-in ductwork, dampers, and expansion joints.
- Pricing and lead times based on world-wide sourcing, with 1) no country of originrestrictions, 2) no Buy American Act obligations, and / or 3) any other potential project financing obligations (e.g. Export Credit Agencies (ECA) etc.).

3.0 Estimate

3.1 Estimate Development

The scope of this estimate is EPC CAPEX:

- Quantities were developed by engineering. Quantities of some of the bulks are shown in Table AC-1. Note that vendor supplied quantities are excluded (i.e. steel for pre-engineered buildings, platform steel for absorber, etc.).
- Labor Rates based on Sherman combined cycle actuals, adjusted for year and incentives. The majority of material costs are based on budgetary quotes received specifically for this Sherman DOE study. Where not available, Materialrates updated using recent actuals or previous estimates.
- Indirects are primarily metric driven.

Table AC-1
Quantity Table

	DOE Sherman
Concrete (CY)	11,325
Structural Steel (TN)	1,281
Misc. Steel (TN)	206
LB Pipe (LF)	36,175
SB Pipe (LF)	14,562
Cable (LF)	1,031,118
Tray (LF)	44,515
AG Conduit (LF)	27,789

3.2 Material and Subcontract Pricing

Below is a summary of the process utilized for development of the Supply Chainestimate inputs:

- Logistics feasibility study (desk-side) was performed to identify a *preliminary*maximum shipping weight and dimension limitations to the jobsite and oversize cargo list (nearest water access ≈200+ miles away).
- Obtained budgetary pricing, lead times, datasheets, design outlines, reliabilitynumbers and catalog sheets for standard products in accordance with +/-15% accuracy pricing classification for select packages. Received e-mail quotes with informal pricing obtained from suppliers based on furnishing a basic product description and basic scope of work, and technical information. Each solicitation targeted a minimum of 3+ technically qualified bidders. In the absence of any commercial framework being available for this study, budgetary pricing was developed in accordance with the following basis and assumptions:
  - A self-perform direct hire EPC execution model with limited use of specialistsub-contractors.
  - World-wide sourcing, with 1) no country origin restrictions, 2) no BuyAmerican Act obligations, and / or 3) any other potential project financing obligations such as Export Credit Agencies (ECA), OverseasPrivate Investment Corporations (OPIC), International Financial Institutions (IFI), and International Commercial and Investment Banksetc.
  - Logistics services on a self-performed basis in accordance with the followingpreferred delivery terms:
    - *Domestic Trucking*: "FCA Named Seller's Facility, Loaded onto Buyer's Conveyance".
    - *International shipments, containerized cargo:* Full Container Load (FCL) - "FCA Named Port of Export/Terminal, Seller to load, block brace and deliver container"; Less Container Load (LCL) - "FCA Named Carrier'sDepot/Terminal".
    - *International shipments, Out-Of-Gage/Heavy Lift Cargo:* Lift-On Lift-Off Cargo [LOLO] - "FAS Named Port/Terminal of Export, within reach ofships gear for lift-on by Carrier"; Roll-On Roll-Off Cargo [RO-RO] - "FOB Named Port/Terminal of Export, offloaded by Seller on to Carrier's nominated vessel".
  - Supplier "standard" warranties only, no extended warranties.
  - No cost of money or fees for supplier compliance with any particularProject requirements for financial securities (i.e. Letter of Credit, Performance Bond) and or preferred payment terms (i.e. Net 90 days).

  Technical and commercial reviews of each supplier proposal were conducted, clarifications

and confirmations solicited from bidders on a limited as required basis; Engineering/Construction/CSU and Supply Chain included cost conditioning for items/components not included in supplier's estimates based onavailable information provided in the solicitation and or short list based on technical merit. The study team developed a pricing recommendation for the estimate based on the reviews.

- **Logistics Estimate:** Included @ 10% of total equipment/material cost, less any delivered to site equipment/materials. *Note:* Custom duties defined as "normal" duties applied by importing country under most favorable nations' status includedin the logistics estimate. Punitive tariffs such as Anti-dumping and Countervailing (AD/CDV), including under 'Section 232 of the Trade Expansion Act 1962' (citing national defense concerns) and under Section 301 of the Trade Act 1974 (citing violation of trade agreements or engagement in unfair trade practices) excluded from the logistics estimate. Import consumption taxes such as value-added tax (VAT) or goods and service tax (GST) are excluded from the logistics estimate.
- **Shop Surveillance Estimate:** Included at @ 0.7% of total equipment/material cost (roughly 12,500 hours).
- **Equipment, Materials, and Sub-Contract Labor Escalation or Validity Estimate:** Excluded from supply chain recommendations. See escalation section in "Other Costs".

Figure AC-1 below is a pie-chart depicting material & subcontract costs by basis (budgetary, recent project actuals, database).

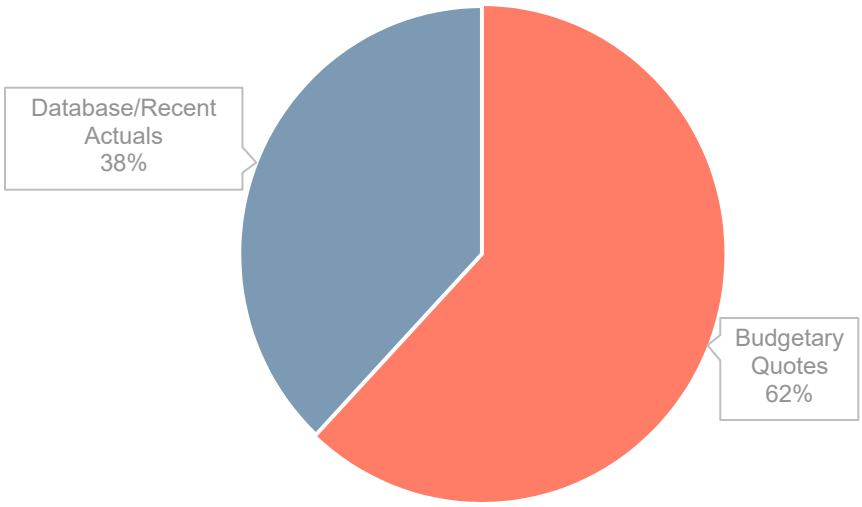

Figure AC-1
Material & Subcontract Cost Basis

The below table summarizes the basis of the Sherman carbon capture estimatefor Material and Subcontract cost.

Table AC-2
Basis of Estimate

Package Description	Notes	Sherman Carbon Capture Basis
Civil, Structural, Architectural		
Earthworks and Drainage		Texas combined cycle actuals, escalated
Concrete Related		Texas combined cycle actuals, escalated
Structural and Misc. Steel		Combine Cycle Actuals, escalated
Buildings		Recent Project Actuals
Mechanical		
CO_2 Absorber Tower		Budgetary Quote
CO_2 Absorber Internals		Budgetary Quote
Stripper Vessel		Budgetary Quote
Stripper Reboiler & Stripper Condenser		Budgetary Quote
Amine Reclaimer		Budgetary Quote
Process Heat Exchangers	Wash water coolers, amine coolers, lean/rich, flash feed	Budgetary Quote
Other Heat Exchangers		Escalated Karsto
Large SS Tanks	Amine Solvent, Stripper reflux drum, Semi-lean flash drum	Budgetary Quote
Other Shop Fabricated Tanks and Vessels		Some Budgetary quotes, some escalated Karsto
Blowers		Budgetary Quote
Large Pumps		Budgetary Quote
Small Pumps		Some Budgetary quote, some Escalated Karsto
Aux Boiler		N/A
CO_2 compressor, Dryers		Budgetary Quote
CO_2Coolers, Steam Generators		Budgetary Quote
CO_2Send out Pumps		Budgetary Quote
Large Filters		Recent Project Actuals / Database
Ductwork, Dampers and Expansion Joints		Budgetary Quote
Eyewash, fire hydrants, hose reels		Updated Database

Table AC-2 (continued)
Basis of Estimate

Package Description	Notes	Sherman Carbon Capture Basis
Piping Bulks		
Ferrous Pipe (CS and SS)		Recent 2020 Budgetary quotes
Nonferrous Pipe (FRP, Concrete,		Recent Project Actuals
Hangers and Other In-line Specialties		Updated Database
Insulation		Updated Database, updated wages, and productivity
Electrical Equipment		
DCS		Budgetary Quote
Transformers		Budgetary Quote
Medium Voltage Switchgear, LV and MCCs		Budgetary Quote
Power Factor Correction		Budgetary Quote
VFD	With Mechanical packages	Budgetary Quote
Electrical Bulks		
Cable		SFE Actuals
Raceway		Updated Database (RS Means)
Control Valves		Database
CCTV, Lighting, Lighting protection		Database

3.3 Craft Labor

Craft Labor estimates leveraged recent combined cycle experience in Texas as describedbelow.

3.3.1 Wages

- Utilized prior combined cycle estimated wage rates with the following adjustments.
  - Escalated base wages utilizing PPI indices. Equated to 2.6% per year.
  - Updated for latest BCS non-union additives (health / dental / life insurances,vacation / holiday).
  - Updated for recent Texas estimate worker's comp percentages.
  - Included allowance of 5% for commercial general liability (CGL).
- Adjusted incentives as follows:
  - Increased daily rate from prior jobs to $80/day per diem for 60% craft toaccount for escalation.
  - $1/hr. incentive for those not receiving per diem.
- Sherman work week based on 48 hrs. plus casual OT. Although this is not required from a schedule / productivity standpoint, the overtime was kept at 48 hrs. as a craft incentive.

The average direct wage rate is roughly $50/hr.

3.3.2 Productivity

Productivities were compared to recent Texas actuals as well as otherrecent non-union projects.

For the tie-ins to the existing plant, a 50% increase was applied to the baseproductivity.

The majority of the base unit rates are power standard unit rates (piping bulks, electrical bulks, civil bulks, electrical equipment, rotating equipment, small heat exchangers). The base unit rates for large mechanical equipment (vessels, internals) were developed specifically for a similar plant.

Below is an estimate of the expected craft peak.

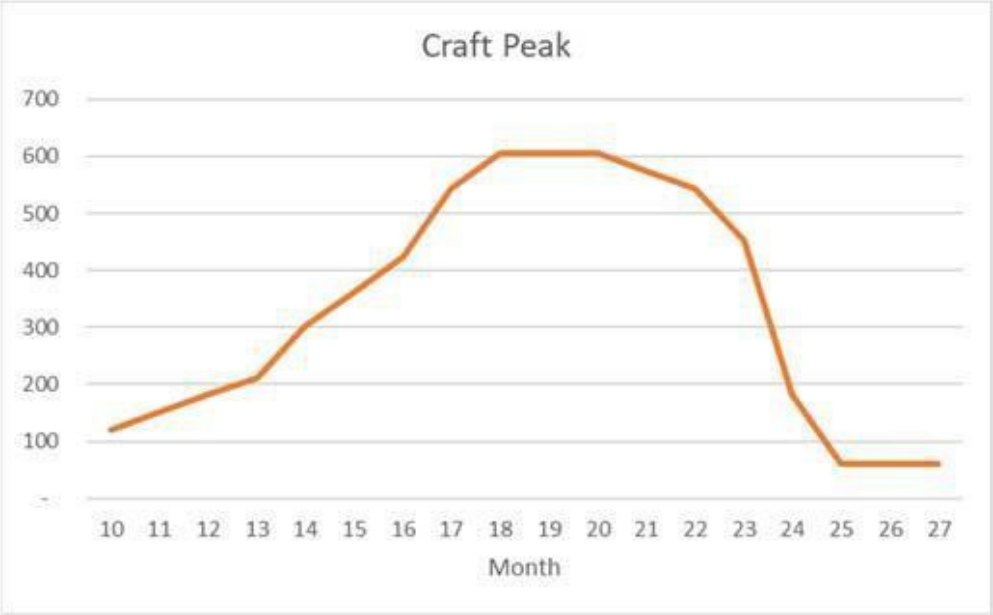

Figure AC-2
Estimated Craft Peak Chart

3.4 Services

3.4.1 Engineering and Other Home Office

- Engineering hours were based on similar projects.
- US/UK split of 80%/20% provided by engineering. Assume no expat relatedrelocation costs.
- Utilized average of grade 26, 5% Overtime, 65% PIR for wage development.
- Other Home Office hours estimated at 50% of Engineering. Utilized 100% US rate.
- Added allowance for 75 trips from Reston, Virginia to Texas and 15 trips fromLondon to Texas – total travel cost of $360k.

3.4.2 Field Non-Manual and Startup

- FNM Hours are based on a percent of direct hours
- Utilized average grade 26, 65% PIR for purposes of developing labor rates.
- For FNM, included 50% local and 50% living away from home allowance (LAHA).
- For SUNM, included 100% per diem.

3.5 Construction Distributable

The construction distributable are based on metrics (per direct job-hour) compared to other recent Texas projects and nonunion projects with additional discrete adjustments as noted below:

- Distributed Labor – Estimated as 25% of direct job-hours based on comparison torecent combined cycle actuals.
- Temporary Facilities - Added costs for prefab area that will be provided tosuppliers (including stripping, aggregate, trailers, temp power).
- Construction Equipment – Developed a construction equipment schedule (CES)utilizing the Sherman Carbon Capture FEED schedule and rental rates from recent estimates.

3.6 Startup

Startup manual labor, material and subcontract costs are based on metrics(per direct job-hour).

3.7 Other Costs

3.7.1 Traffic and Logistics

Historical database pricing includes freight to jobsite. For budgetary pricingwhere freight has been excluded, 10% has been added based on procurement recommendation.

3.7.2 Insurances

Utilized overall percentages from Texas Combined Cycle Estimates (0.65%) for Builder's Risk insurance. CGL included in wage rates.

3.7.3 Taxes

Taxes are excluded.

3.7.4 Securities

Utilized overall percentages (0.35%) from previous Panda estimates whichincluded a 10% escalating letter of credit and 5% warranty bond.

3.7.5 Warranty

Included at 0.50% of Total Constructed Cost.

3.7.6 Escalation

Due to the unknown project start date, the study will be qualified as NTP = today for escalation purposes. An allowance of 2.

3.8 Qualifications and Assumptions

Provided in Chapter 16.

3.9 Equipment Pricing Raw Data

3.9.1 Absorber-Stripper Vessel Estimating Pricing Summary

		Bidder 1		Bidder 2		
Scope	**Qty**	**Unit Price**	**Ext Price**	**Unit Price**	**Ext Price**	**Comments**
CO2 Stripper	1	$ 7,338,900	$ 7,338,900	$ 31,351,126	$ 31,351,126	
CO2 Stripper Platforms	0		$ -		$ -	Included in Price, Labor Only
Absorber A	1	$ 6,419,300	$ 6,419,300			
Absorber B	1	$ 6,419,300	$ 6,419,300			
Absorber Platforms	0		$ -		$ -	Included in Price, Labor Only
	Subtotal		**$ 20,177,500**		**$ 31,351,126**	
10%	**Scope Allowance**		**$ 2,017,750**		**$ -**	
0%	**Commercial Allowance**		**$ -**		**$ -**	
0%	**Shipping**		**$ -**		**$ -**	Subcontract Execution
Adjusted Subtotal			**$ 22,195,250**		**$ 31,351,126**	
			Average Cost	**$ 26,773,188**	**(used)**	

Actions/Comments:
Recommendations believes Bidder 1 missed items so 10% allowance provided
Shipping removed,
subcontract execution

Size Comparison		**DOE Sherman**	**Karsto**
CO2 Absorber	DIA. (FT)	39	39
CO2 Absorber	HGT. (FT)	145	145
CO2 Stripper	DIA. (FT)	22	22
CO2 Stripper	HGT. (FT)	143	143

3.9.2 Absorber and Stripper Internals

		Bidder 1		Bidder 2		
Scope	**Qty**	**Unit Price**	**Ext Price**	**Unit Price**	**Ext Price**	**Comments**
CO2 Absorber	2	$ 3,500,000	$ 7,000,000	$ 2,367,500	$ 4,735,000	
Stripper	1	$ 1,200,000	$ 1,200,000	$ 935,000	$ 935,000	
	Subtotal		**$ 8,200,000**		**$ 5,670,000**	
0%	**Scope Allowance**		**$ -**		**$ -**	
0%	**Commercial Allowance**		**$ -**		**$ -**	
10%	**Shipping**		**$ 820,000**		**$ 567,000**	
Adjusted Subtotal			**$ 9,020,000**		**$ 6,237,000**	
			Average Cost	**$ 7,628,500**	**(used)**	

Actions/Comments:
Recommendation to average pricing for two vendors

3.9.3 Flue Gas Blowers Cost Summary

		Bidder 1		Bidder 2		Bidder 3	
	ACFM	803,898		792,813		846,233	
	RPM	900		900		720	
	MOTOR HP	8,500		7,500		10,000	
Category	**Qty**	**Unit Price**	**Ext Price**	**Unit Price**	**Ext Price**	**Unit Price**	**Ext Price**
Base Cost Fans	2	$450,389	$900,778	$739,734	$1,479,468	$3,969,150	$7,938,300
Couplings	2	$34,211	$68,422		$0		
Motor	2	$582,010	$1,164,020		$0		
Silencer	2	$76,916	$153,832		$0		
Detectors	2	$797	$1,594		$0		
Detectors	2	$1,086	$2,172		$0		
Circ Oil System	2	$32,543	$65,086		$0		
Insulation Pins	2	$13,256	$26,512	$13,256	$26,512		
VFD (Variable Frequency Drive)	2	$2,250,000	$4,500,000	$2,250,000	$4,500,000	**Included VFD	
VFD (Delivery/TA Times)	2	$90,625	$181,250	$90,625	$181,250	**Included VFD	
	Subtotal		**$7,063,666**		**$6,187,230**		**$7,938,300**
2%	**Scope Allowance**		**$141,273**		**$123,745**	-	Shop Testing, Vibration Probes, Spares, etc.
0%	**Commercial Allowance**		**$0**		**$0**	**$0**	Suggest covering in contingency
10%	**Shipping**		**$720,494**		**$631,097**	**$793,830**	
	Adjusted Subtotal		**$7,925,433**		**$6,942,072**	**$8,732,130**	
	Average of 3 Vendors		**$7,866,545**	**(used)**			

Actions/Comments:
Confirmed carrying the average of three bidders

3.9.4 Amine Reclaimer Cost Summary

		Scenario 1	Scenario 2
	Category	**Bidder 1**	**Bidder 1**
	Quoted Value	$1,335,000	$1,335,000
	CS Vessel's @ 10% SoW Relative Value	$133,500	-
	CS Vessel's @ 20% SoW Relative Value		$267,000
	CS to SS Rule of Thumb Conversion (4x) Commercial Adjustment	$534,000	$1,068,000
	Subtotal	$2,002,500	$2,670,000
0%	**Scope Allowance**		
0%	**Commercial Allowance**		
10%	**Shipping**	$200,250	$267,000
	Adjusted Subtotal	$2,202,750	$2,937,000
	Average Pricing Used	$2,569,875	

Actions/Comments:
Procure/Eng. recommended 2 average prices

3.9.5 Compressor Cost Summary

		Bidder 1	Bidder 1 (REVISED)	Bidder 2	Bidder 3
	Flow Rate (m^3/HR)	76,537	76,537	Option	Informal
	Motor HP				Quote
	Diff. Bar				
Category	**Qty**	**Unit Cost**	**Unit Cost**		
Base Cost	1	$10,200,000	$10,200,000		
Motor Operating Spares	1	$56,000	$56,000		
Gearbox operating spares	1	$42,000	$42,000		
Compressor, Dry gas seal panel and Lube oil system start-up and commissioning spares	1	$75,000	$75,000		
Performance Testing	1	$300,000	$300,000		
	Subtotal	**$10,673,000**	**$10,673,000**	**$12,100,000**	**$15,575,000**
15%	**Scope Allowance**	**$0**	**$1,600,950**	**-$635,000**	
0%	**Commercial Allowance**	**$0**	**$0**		
10%	**Shipping**	**$1,067,300**	**$1,227,395**	**$1,146,500**	**$1,557,500**
Adjusted Subtotal		**$11,740,300**	**$13,501,345**	**$12,611,500**	**$17,132,500**
			USED		

Actions/Comments:

Bidder 1 was only qualified bidder based on compliance. Have three different stages of compressors bid properly

VFD confirmed in the Bidder 1 bid

Engineering confirmed same compressors in size

3.9.6 CO2 Dryer Package Cost Summary

Category	Qty	Bidder 1	Bidder 2
Base Cost	1	$16,500,000	$3,900,000
	Subtotal	**$16,500,000**	**$3,900,000**
0%	**Scope Allowance**	**$0**	**$0**
0%	**Commercial Allowance**	**$0**	**$0**
10%	**Shipping**	**$1,650,000**	**$390,000**
Adjusted Subtotal		**$18,150,000**	**$4,290,000** (USED)

Per Agreement in meeting, will carry the Bidder 2 pricing. Bidder 1 pricing does not seem correct based on data.

3.9.7 CO2 Send Out Pumps Pricing

		Bidder 1
	GPM	194
	Motor HP	1,219
	Flow M^3/HR	405
	Category	**Unit Price**
	Base Cost	$1,262,500
0%	Scope Allowance	$0
0%	Commercial Allowance	$0
10%	Shipping	$126,250
	Ext Price	**$1,388,750 (Used)**

3.9.8 Plate and Frame Heat Exchangers Price Summary

		Bidder 1				
ITEM #	**Heat Exchanger Description**	**QTY**	**Heat Transfer Surface Area per Unit**	**Total Heat Transfer Surface Area m2**	**UNIT PRICE**	**LINE TOTAL**
ME-101/104	WASH WATER COOLER (ABSORBER 1 & 2)	2	341	682	$82,000	$164,000
ME-102	LEAN AMINE COOLER	1	192	192	$233,300	$233,300
ME-103 A-D	SEMI-LEAN / RICH HEAT EXCHANGER	4	855	3420	$385,200	$1,540,800
ME-107	FLASH FEED HEAT EXCHANGER	1	39	39	$73,500	$73,500
ME-108 A-J	LEAN / RICH AMINE HEAT EXCHANGER	12	855	10260	$392,800	$4,713,600
ME-109	FLASH FEED HEATER	1	192	192	$173,100	$173,100
ME-110 A-H	STRIPPER REBOILER	8	855	6840	$410,400	$3,283,200
ME-111 A-B	OVERHEAD STRIPPER CONDENSER	2	513	1026	$467,600	$935,200
ea	Documentation & Engineering	1			$40,000	$40,000
					Subtotal	$11,156,700
				0%	**Scope Allowance**	$0
				0%	**Commercial Allowance**	$0
				10%	**Shipping**	$1,115,670
					Adjusted Subtotal	$12,272,370

		Bidder 2				
ITEM #	Heat Exchanger Description	QTY	Heat Transfer Surface Area Per Unit m2	Total Heat Transfer Surface Area m2	UNIT PRICE	LINE TOTAL
ME-101/104	WASH WATER COOLER (ABSORBER 1 & 2)	2	285.3	571	$60,000	$120,000
ME-102	LEAN AMINE COOLER	1	255.6	256	$396,940	$396,940
ME-103 A-D	SEMI-LEAN / RICH HEAT EXCHANGER	6	845.0	5070	$555,167	$3,331,000
ME-107	FLASH FEED HEAT EXCHANGER	1	41.9	42	$114,960	$114,960
ME-108 A-J	LEAN / RICH AMINE HEAT EXCHANGER	16	845.0	13,520	$556,250	$8,900,000
ME-109	FLASH FEED HEATER	1	191.7	192	$262,620	$262,620
ME-110 A-H	STRIPPER REBOILER	8	845.0	6760	$555,250	$4,442,000
ME-111 A-B	OVERHEAD STRIPPER CONDENSER	4	159.8	639	$285,000	$1,140,000
ea	Documentation & Engineering	0			$0	$0
					Subtotal	$18,707,520
				0%	**Scope Allowance**	$0
				0%	**Commercial Allowance**	$0
				10%	**Shipping**	$1,870,752
					Adjusted Subtotal	$20,578,272

AVERAGE PRICING = 16,425,321 (Used)

Separate Bid - ME-118		Bidder 1			Bidder 2	
ITEM #	DESCRIPTION	QTY	UNIT PRICE	LINE TOTAL	QTY	UNIT PRICE
ME-118	CO2 Product Cooler	1	No Bid	No Bid	1	$1,000,000 **(Used)**

Actions/Comments:
Bidder 3, 4, and 5 no response

3.9.9 Shell and Tube Heat Exchangers

	Bidder 1				
Category	**Qty**	**Heat Transfer Surface Area per Unit**	**Total Heat Transfer Surface Area m2**	**Unit Price**	**Ext Price**
3rd Stage - Heat Exchanger 1 (Intercooler)		-	778.33		$1,980,510
3rd Stage - Heat Exchanger 2 (Steam Generator)		-	338.3		$457,970
				Subtotal	**$2,438,480**
			0%	**Scope Allowance**	**$0**
			0%	**Commercial Allowance**	**$0**
			10%	**Shipping**	**$243,848**
				Adjusted Subtotal	**$2,682,328**

	Bidder 2				
Category	**Qty**	**Heat Transfer Surface Area per Unit**	**Total Heat Transfer Surface Area m2**	**Unit Price**	**Ext Price**
3rd Stage - Steam Generator	1	650	650	$633,900	$633,900
3rd Stage - Interstage Cooler	1	634	634	$1,051,300	$1,051,300
				Subtotal	**$1,685,200**
			0%	**Scope Allowance**	**$0**
			0%	**Commercial Allowance**	**$0**
			10%	**Shipping**	**$168,520**
				Adjusted Subtotal	**$1,853,720**

	Bidder 3 (Incorrect Modelling, Bidder not considered)				
Category	Qty	Heat Transfer Surface Area per Unit	Total Heat Transfer Surface Area m2	Unit Price	Ext Price
3rd Stage - ME-116	2	225	450.00	$244,800	$489,600
3rd Stage - ME-117	2	955	1910.00	$2,108,700	$4,217,400
				Subtotal	**$4,707,000**
			0%	**Scope Allowance**	**$0**
			0%	**Commercial Allowance**	**$0**
			10%	**Shipping**	**$470,700**
				Adjusted Subtotal	**$5,177,700**

	Bidder 4 (Not considered since bid was incomplete)				
Category	Qty	Heat Transfer Surface Area per Unit	Total Heat Transfer Surface Area m2	Unit Price	Ext Price
3rd Stage - ME-116	1	223	223	$305,000	$305,000
3rd Stage - ME-117	No Bid				
				Subtotal	**$305,000**
			0%	**Scope Allowance**	**$0**
			0%	**Commercial Allowance**	**$0**
			10%	**Shipping**	**$30,500**
				Adjusted Subtotal	**$335,500**

	Bidder 5 (Insufficient technical information to assess, so not considered)				
Category	Qty	Heat Transfer Surface Area per Unit	Total Heat Transfer Surface Area m2	Unit Price	Ext Price
3rd Stage - ME-116	2	344	687	$486,398.15	$972,796
3rd Stage - ME-117	3	1135	3406	$915,291.10	$2,745,873
				Subtotal	**$3,718,670**
			0%	**Scope Allowance**	**$0**
			0%	**Commercial Allowance**	**$0**
			10%	**Shipping**	**$371,867**
				Adjusted Subtotal	**$4,090,537**

Average of Bidders 1 & 2 (Used)	**$2,268,024**

Duty	
Equipment	**DOE Sherman**
CO2 COMPRESSOR 1ST STAGE - STEAM GENERATOR	6.35
CO2 COMPRESSOR 1ST STAGE - INTERCOOLER	17.40
CO2 COMPRESSOR 2ND STAGE - STEAM GENERATOR	6.25
CO2 COMPRESSOR 2ND STAGE - INTERCOOLER	11.47
CO2 COMPRESSOR 3RD STAGE - STEAM GENERATOR	7.57
CO2 COMPRESSOR 3RD STAGE - INTERCOOLER	28.2

Primary Shell Pressure				
Equipment	**DOE Sherman**	**DOE Sherman Basis**	**Used**	
CO2 COMPRESSOR 1ST STAGE – STEAM GENERATOR	75	1st Stage Factored	$157,955	*From Factored and Internal Data
CO2 COMPRESSOR 1ST STAGE – INTERCOOLER	97	1st Stage Factored	$260,876	
CO2 COMPRESSOR 2ND STAGE – STEAM GENERATOR	290	2nd Stage Factored	$355,579	
CO2 COMPRESSOR 2ND STAGE – INTERCOOLER	376	2nd Stage Factored	$589,082	
CO2 COMPRESSOR 3RD STAGE – STEAM GENERATOR	1,246			
CO2 COMPRESSOR 3RD STAGE – INTERCOOLER	1,620			

3.9.10 Vessels (Drums) Price Summary

	Details	Bidder 1	Bidder 2	Bidder 3	Bidder 4	Avg 3 Prices	Estimate – All in Tank Price
MV201	Semi Lean Amine Flash Drum	$ 243,486	$ 241,800	$ 215,495	$ 187,000	$ 224,095	$ 295,806
MV202	Stripper Reflux Drum	$ 190,731	$ 273,300	$ 224,910	$ 198,000	$ 220,677	$ 291,294
MV203	CO2 Compressor Suction Drum	$ 249,574	$ 305,100	$ 245,200	$ 223,000	$ 259,225	$ 342,177
MV-104	1st Stage Knock Out Drum	$ 116,671	$ 155,000	$ 136,304	$ 123,000	$ 131,557	$ 173,655
MV-105	2nd Stage Knock out Drum	$ 84,206	$ 124,500	$ 135,170	$ 100,000	$ 102,902	$ 135,831
MV-106	CO2 Surge Drum	$ 861,333	$ 1,235,200	$ 592,028	$ 1,074,000	$ 1,056,844	$ 1,395,035
	TOTAL	$ 1,746,001	$ 2,334,900	$ 1,549,107	$ 1,905,000	$ 1,995,300	
20%	Missing Scope	$ 349,200	$ 466,980	$ 309,821	$ 381,000	$ 399,060	
0%	Commercial Allowance	$ -	$ -	$ -	$ -		
10%	Shipping	$ 209,520	$ 280,188	$ 185,893	$ 228,600	$ 239,436	
	Adjusted Total	**$ 2,304,721**	**$ 3,082,068**	**$ 2,044,821**	**$ 2,514,600**	**$ 2,633,796**	$ 2,633,796
		Includes Shipping	Includes Shipping	**Exclude Per Procurement**		**(Used)**	

Do not use bidder 3 pricing since sufficient investigation has not been done to see if the alternative material for MV-106 will be accepted or not. Add a margin for the missing scope (15-20%).

Actions/Comments:
Missing scope includes skirts, Inlet devices, platforms, and ladders are included that were not directly detailed
(20% Adder Basis)
Shipping Adder of 10%
Applied

3.9.11 Tanks Cost Summary

Scope	Bidder 1
Rich Amine Storage Tank	$ 997,000
Lean Amine Solvent Storage Tank	$ 997,000
Process Water Storage Tank	$ 201,000
Caustic Soda Storage Tank	$ 124,000
Subtotal	$ 2,319,000
0% Scope Allowance	$ -
0% Commercial Allowance	$ -
0% Shipping	$ -
Adjusted Subtotal	$ 2,319,000 (used)

Actions/Comments

Remove shipping from pricing for subcontract execution

3.9.12 Main Pumps Cost Summary

		Bidder 1		Bidder 2		Bidder 3	
Item Tag Number	Qty	Item Unit Price	Ext Unit Price	Item Unit Price	Ext Unit Price	Item Unit Price	Ext Unit Price
MP-101 A/B and MP-124 A/B (ALT)	4			$198,674	$794,696	$336,488	$1,345,952
MP-102 A/B & MP-104 A/B	4			$56,152	$224,608	$190,648	$762,592
MP-105 A/B (ALT)	2			$413,880	$827,760	$405,074	$810,148
MP-106 A/B (ALT)	2			$93,784	$187,568	$126,307	$252,614
MP-107 A/B	2			$9,498	$18,996	$75,988	$151,976
MP-111 A/B	2			$38,052	$76,104	$93,745	$187,490
MP-112 A/B	2			$20,824	$41,648	$55,676	$111,352
MP-119 A/B	2			$7,804	$15,608	$35,790	$71,580
	Subtotal		**$ 3,227,945**		**$ 2,186,988**		**$ 3,693,704**
2%	**Scope Allowance**		**$ 64,559**		**$ 43,740**		**$ 73,874**
0%	**Commercial Allowance**		**$ -**		**$ -**		**$ -**
10%	**Shipping**		**$ 329,250**		**$ 223,073**		**$ 376,758**
	Adjusted Subtotal		**$ 3,621,754 (used)**		**$ 2,453,801**		**$ 4,144,336**

Actions / Questions:
Shipping Adder of 10%
Applied 2% Scope Allowance for missing items

3.9.13 Flue Gas Duct Price Summary

Category	Bidder 1	Bidder 2	Bidder 3
Weight (Tons)	1,348	-	-
Bid Price	$19,089,000	$15,380,000	$15,550,000

	Base Cost	$19,089,000	$15,380,000	$15,550,000
0%	Scope Allowance	$0		
0%	Commercial Allowance	$0		
10%	Shipping	$0	$1,538,000	$1,555,000
		Not Required	Required Per Procure	Required Per Procure
	Adjusted Subtotal	**$19,089,000**	**$16,918,000**	**$17,105,000**
	Average	**$17,704,000 (used)**		

Actions/Comments:

Transition from Blowers to Absorbers is addition to Bid Weight

Shipping Adder Required for 2 Bidders

3.9.14 DCS Cost Summary

Sl. No	Parameters	Bidder 1	Bidder 2	Bidder 3	Bidder 4	
7	25% Spare I/O's	incl. in bid	incl. in bid	incl. in bid	incl. in bid	
10	Furniture	incl. in bid	incl. in bid	incl. in bid	No mention in the bid	
11	FAT	incl. in bid	incl. in bid	Up to 3-weeks of FAT included	incl. in bid	
12	TA	incl. in bid	incl. in bid	incl. in bid	incl. in bid	
14	Start up and commissioning spares	incl. in bid	$25,000	incl. in bid	$25,000	
16	Price	$ 770,000	1,055,212 + $25,000 for factory training	$ 1,439,000	$ 1,220,000	
17	Price incl Spares	$ 770,000	$ 1,105,212	$ 1,439,000	$ 1,245,000	
18	Average Price excl Spares	$1,127,303				
19	Average Price Incl Spares	$1,139,803				Average Price Recommended

20	AFGIS/Scope adjustment	2%	$23,000
21	Freight	10%	$114,000
22	Training + TA Time		$35,000
23	Commercial Conformance	0%	$0
24	**Grand Total (Used)**		$1,312,000
25			
	Total DCS $ per I/O point		$624

3.9.15 SWGR Pricing

		Bidder 1	Bidder 2	Bidder 3	Average Pricing
MV SWGR: 13.2 KV, 3 phase, 3 wire, 60 Hz, 40 kA, 95 kV BIL, 2000 amps main bus rating	1ESES101	$ 683,600.00	$ 571,563.00	$ 439,627.00	$ 564,930.00
MV SWGR: 4.16 KV, 3 phase, 3 wire, 60 Hz, 40 kA, 60 kV BIL, 2000 amps main bus rating	1ESES102	$ 779,988.00	$ 624,617.00	$ 537,198.00	$ 647,267.67
Transformers: 2.5 MVA	2 dry type	$ 184,548.00	not included	$ 156,850.00	$ 170,699.00
LV SWGR: 480 V, 4000 amps main bus	1ECEKl01/1ECEKl02	$ 597,836.00	$ 471,072.61	$ 391,421.00	$ 486,776.54
LV MCC: 480 V, 1600 amps main bus	1ECEM03	$ 304,137.00	$ 147,724.39	$ 49,697.00	$ 167,186.13
MCC: 480 V, 1600 amps	1ECECM01-M02	$ 411,909.00	$ 205,690.24	$ 93,601.08	$ 237,066.77
Power Factor Capacitors: 20,438 KVAR		$ 362,506.00	$ 300,000.00	$ 446,428.00	$ 369,644.67
Site Acceptance Testing		$ 118,332.00	not included	not included	$ 118,332.00
3 days site training		$ 13,295.00	not included	not included	$ 13,295.00
Startup Spares		$ 68,777.00	not included	not included	$ 68,777.00
TOTAL		**$ 3,524,928.00**	**$ 2,320,667.24**	**$ 2,114,822.08**	**$ 2,843,974.77**

AFGIS/Scope Adjustment	2%	$57,000
Freight	10%	$285,000
Commercial Conformance	0%	
Grand Total (used)		$3,186,000

3.9.16 Transformer Pricing Summary: 13.8/4.16 KV Step Down Transformer

		Bidder 1	Bidder 2	Bidder 3
			Cannot provide this transformer	No exceptions taken but technical data not provided, only pricing and delivery time.
Price	$	134,570 + 3000 for Testing	N/A	125,000

AFGIS/Scope Adjustment	2%	$	3,000	
Construction & SU TA		$	20,000	
Freight		$	30,000	
Commercial Conformance	0%	-		
Grand Total(used)		$	191,000	Incl in Estimate Currently

3.9.17 Transformer Cost Summary: 138/13.8 KV Step Down

		Bidder 1	Bidder 2	Bidder 3
			Bidder 2 has not taken any exceptions but not provided technical data, just the pricing and delivery time.	Bidder 2 has not taken any exceptions but not provided technical data, just the pricing and delivery time.
Price		685,290 + 3000	725,621	1.6M

AFGIS/Scope Adjustment	2%	$	14,000	
Oil Filling		$	25,000	
Construction & SU TA		$	20,000	
Freight		$	30,000	
Commercial Conformance	0%	-		
Grand Total (used)		$	778,000	Incl in Estimate Currently

Appendix AD: Responses to DOE-NETL Questions on Final Report

Doc FEED Study for Carbon Capture Plant Retrofit to a NGCC Power Plant
Rev Rev0
Date 6/18/21 (questions received)
Date 10/22/2021 (today's date)

#	Question from DOE	BEC response	Page
1	In Section 17.7.4 it is reported that the semi-lean amine system allows efficient use of low-pressure steam generated in the CO2 compression section and therefore reduces net external steam demand for the plant. While the high compression ratios used in each CO2 compression stage increase available heat for steam generation, these high compression ratios also increase the electrical load (essentially electricity is exchanged for steam generation). o Does this system result in a net efficiency gain for the plant, or would a more efficient compression system, with lower compression ratios, and higher steam demand from the plant be more efficient overall? If it does not result in a net efficiency gain, please clarify why reducing steam demand is prioritized. o Can you comment on the specific efficiency gains/penalty of the selected setup vs. a simpler setup that does not include the semi-lean amine system or steam generation during CO2 compression? o Can you comment on the influence of this system on the economics of the process – what is the additional cost (capital and O&M) incurred by the addition of the CO2 compression steam generation system and the semi-lean amine system.	The impact of removing compression steam generation and semi-lean system is: A. CAPEX savings of $8M for semi-lean system (see cost summary in Appendix AC) B. CAPEX increase of $12.4M for compression system changes - (adding compression stages versus implementing a CO2 pump) C. Reduced power demand of 1MW in compression system D. Increase steam demand of 10.4tph saturated steam at stripper reboiler, which is 9tph LP steam from the CCGT = 1.4MW loss generation In conclusion, CAPEX increases by $4.4M and net power export from power plant is reduced by 0.4 MW. The main reason for the inclusion of the semi-lean system and the compression steam generation, is that the associated CO2 compression configuration allows the ability to take advantage of CAPEX and OPEX savings achieved with dense phase CO2 pumping.	3-9, 3-13
2	What is the limit on extracted steam from the LP/IP crossover? When the PCC is offline, do the modifications performed allowing steam extraction impact LP turbine output (compared to output pre-modification)?	Siemen's had indicated that as long as the steam going to the LP turbine is > 20% of the design flow there is no concern. The max flow going to the LP turbine for a fired case is 1,855,551 lbs/hr. Assuming that is the design flow, 20% of that is 371,110 lbs/hr. Actual flows to the LP turbine are much more so there was never a concern. Note that limit can be as low as 15% but that would require Siemen's to do some further analysis. We do have heat balances from Siemens which we could not attach because of NDA issues.	5-2
3	Can you provide more details on the selected absorber internals supplier or choice of packing?	Both Sulzer and Koch-Glitsch were consulted during the FEED study. The FEED design allows the absorber internals supplier to be selected through competitive bidding in EPC. The final selection will be based on price, performance, and experience history. We envisage the bidders to include Sulzer and Koch-Glitsch, and for bids to obtain options for both their latest CC structured packing and alternatively their recommended conventional structured packing, likely to be as listed below: - Sulzer MellapakCC(TM) - Sulzer Mellapak(TM) 2X - K-G FLEXIPAC(R) CP(R) - K-G FLEXIPAC(R) 2X	N/A
4	The reclaimer bottoms (with the composition reported in Table 3-5 copied below) has been labeled as hazardous waste in the report. o Can you comment on why the hazardous classification was selected? o Can you provide more details on the $500/t hazardous waste disposal cost – how is this estimate reached? *Table 3-5* *Waste Stream Composition Assessment* Component / wt% MEA 26.5 CO_2 0.0 Water 35.7 Thermally degraded amine 27.3 Neutralized HSS 10.5	Based on the paucity of data from full scale high rate reclaimers on amine based PCC for CCGT plants, the decision was to consider reclaimer residuals hazardous until it can be definitively proven that waste is not hazardous. Again, since no reclaimer waste was available for characterization by a hazardous waste disposal provider, the high end of liquid hazardous waste haulage and disposal was selected. The actual price for disposal cost would be expected to be lower when the residuals are fully analyzed and classified.	v, 1-11, 11-6
5	Can you comment on why the CO2 product specifications detailed in Table 2-7 (copied below) were selected? *Table 2-7* *CO_2 Product Specifications* Composition / Specification Carbon dioxide (mol%) >99.6 Nitrogen (wt%) <0.04 Water (ppmw) <50 Hydrogen sulfide (ppmw) <100 Oxygen (ppmw) <200 Ammonia Trace Amine Trace	The CO2 specification selected is consistant with that which can be produced with only moisture removal during compression and minimize pipeline deterioration. If the wells finally selected as end point of future pipeline require a different specification, the additional treatment would then be added.	2-11
6	What solvent additives are considered and what are the anticipated costs associated with these added consumables?	No additives are contemplated at this time but as noted in the report, this is to be addresed with internals packing supplier during detailed design. The rigorous, high level of reclaiming is expected to address the issues associated with additive usage such as foaming, although this should be tested to confirm reclaimer performance. Also, all materials associated with solvent contact are stainless steel or higher alloys.	2-10, 14-17, 17-10, 4-9, 10-1

7	Regarding the amine reclaimer: in Section 2.2.9, it is mentioned that “steam to the reclaimer flash exchangers is provided from the PCC auxiliary boiler”. In Section 5.2 it is stated that the energy required for the reclaimer is “provided by the auxiliary boiler at natural-gas combined-cycle (NGCC) plant via a 4in. line…”. Can you clarify if this auxiliary boiler is available at the Sherman power plant or is added in with the PCC plant. If the auxiliary boiler is not available, can you verify that the cost of the system is included in the reported capital costs.	The auxiliary boiler is in place at the Sherman CCGT plant and is available for reclaimer steam. Aux boiler location can be seen in Figure 4-5, CCGT plant layout.	4-12
8	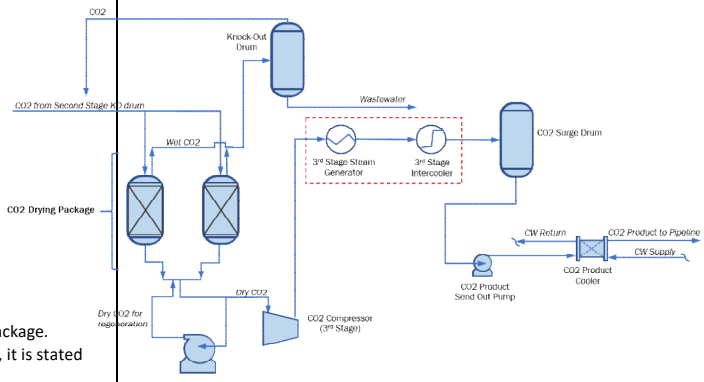 Figure 3-8 includes a “CO2 Vent Gas” stream leaving the CO2 drying package. According to the description of the CO2 dryer package in section 4.2.6, it is stated that “virtually no CO2 is vented or recycled”. Can you clarify.	The CO2 Gas Vent stream in Figure 3-8 was revised (as seen below) to show the recirculation of the CO2, since the original figure appeared to show CO2 being vented to atmosphere. Dry CO2 is heated and routed through the offline mol sieve to regenerate the mol sieve by vaporizing the water. This wet CO2 is then vented through a cooler and KO drum, and routed back to the online mol sieve with the bulk CO2 feed. A blower is provided upstream of the dry CO2 heater to maintain the CO2 pressure and ensure CO2 is recovered within the drying process.	3-14
9	The costing methodology used includes what is classified as owner’s contingency according to NETL’s 2019 Quality Guidelines for Energy System Studies: “Cost Estimation Methodology for NETL Assessments of Power Plant Performance”. Process and Project contingency were not included in the cost estimate provided. Can you elaborate on why these contingencies were not included?	The referenced guidelines were not used. As seen in Figure 16-2, total contingency of 8% was included. Process contingency is excluded since an extensive piloting effort is recommended prior to FID (see chapter 17). As stated in 1.4.3, "If the economics of the addition of carbon capture are robust, the uncertainties could be absorbed in large capital cost contingency pools and reserve funds for de-bottlenecking and revising the design after initial operation."	1-21, 16-5
10	Corporate taxes were not accounted for in the cost estimate. Can you elaborate on why this decision was made?	The corporate tax level would be defined when the final ownership structure is decided. The level of taxation on the profits claimed by the various stakeholders can vary depending on whether a partnership, a C corp, an S corp, or some other ownership mode or combinations of modes is used. At this stage in project development, an assumption is not useful. As noted in 16.3, modeling during the next stage "will include required reserve funds and debt service coverages, tax projections, and other considerations unique to each stakeholder. For this study an engineering economics approach to annualizing the capital costs was used."	16-7
11	Insurance and property taxes were not included in the O&M cost estimate. Can you elaborate on why this decision was made?	Insurance was considered included in the Admin allowance shown in Table 16-5 but not listed. Property taxes were not included since a property tax holiday from Grayson County is thought highly likely based on the experience with the CCGT plant.	16-8
12	Can you comment on which of the owner’s costs delineated in Exhibit 2-4 of NETL’s 2019 Quality Guidelines for Energy System Studies: “Cost Estimation Methodology for NETL Assessments of Power Plant Performance” were not included in the capital cost estimate, and why.	The referenced guidelines were not used. The guide assumes an EPCM approach to project implementation and this approach is not viable under a project financing (limited recourse). Instead, an EPC approach with a total cost wrap is required for this project, which is expected to continue being the most common model for power plant construction in the USA. It is also expected to be the standard for CCUS projects.	16-5