LAWRENCE
LIVERMORE
NATIONAL
LABORATORY

LLNL-TR-817880

The Next Breakthroughs in Neutrino Physics, LDRD final report

M. Heffner, S. Sangiorgio, K. Kazkaz, J. Brodsky

December 22, 2020

Disclaimer

This document was prepared as an account of work sponsored by an agency of the United States government. Neither the United States government nor Lawrence Livermore National Security, LLC, nor any of their employees makes any warranty, expressed or implied, or assumes any legal liability or responsibility for the accuracy, completeness, or usefulness of any information, apparatus, product, or process disclosed, or represents that its use would not infringe privately owned rights. Reference herein to any specific commercial product, process, or service by trade name, trademark, manufacturer, or otherwise does not necessarily constitute or imply its endorsement, recommendation, or favoring by the United States government or Lawrence Livermore National Security, LLC. The views and opinions of authors expressed herein do not necessarily state or reflect those of the United States government or Lawrence Livermore National Security, LLC, and shall not be used for advertising or product endorsement purposes.

This work performed under the auspices of the U.S. Department of Energy by Lawrence Livermore National Laboratory under Contract DE-AC52-07NA27344.

FULL TECHNICAL FINAL REPORT
The Next Breakthroughs in Neutrino Physics

Mike Heffner

18-ERD-028

Abstract

The neutrino is an important fundamental particle, one of the building blocks of the universe. A better understanding of the neutrino will answer questions regarding the origin of mass, the matter and anti-matter asymmetry of the universe, and the nature of dark matter. The nation's research community has recognized that the answers to these and other questions are within reach and has assigned neutrino experiments the highest priority for both nuclear and particle physics programs. We are investigating three aspects of neutrino experimentation: detection techniques, target materials, and data analysis. Our efforts targeted multiple applications including experiments to measure neutrinoless double-beta-decay, neutrino-oscillation and neutrino mass. Our research objectives include (1) developing approaches that make detectors scalable to larger sizes and insensitive to background signals; (2) increasing the signal strength and reducing noise from targets; and (3) efficiently distinguishing background noise from signals during analysis. In this LDRD we have advanced all of these areas. We have demonstrated the scale up of a metal organic framework that can adsorb xenon directly from the air that will allow for large neutrino detectors made from xenon. We have studied the use of Cherenkov radiation to reduce the signal backgrounds. We demonstrated the cracking of hydrogen to make atomic tritium for neutrino mass measurements, and lastly we demonstrated the benefits of machine learning techniques to improve signal to noise during analysis.

Background and Research Objectives

The goal of this project is to advance the state of the art in neutrino physics. We approached this by working on three experimental areas, detection techniques, target materials, and data analysis. The following section is broken into subsections describing the work accomplished.

Scientific Approach and Accomplishments

Each of the areas of research are described in the subsections below.

Detection Technique: Cherenkov light measurement for background reduction

This LDRD investigated the ability of a liquid xenon neutrinoless double beta decay experiment to discriminate between signals and backgrounds using the directional information present in Cherenkov light. This work culminated in the publication of a journal article in Nuclear Instruments and Methods [Broadsky, 2019].

Neutrinoless double beta decays in liquid xenon produce a significant amount of Cherenkov light, with a photon number and angular distribution that distinguishes these events from

common backgrounds. A GEANT4 simulation was used to simulate Cherenkov photon production and measurement in a liquid xenon detector and a multilayer perceptron was used to analyze the resulting distributions to classify events based on their Cherenkov photons. Our results show that a modest improvement in the sensitivity of neutrinoless double beta decay searches is possible using this technique, but the kinematics of the neutrinoless double beta decay and electron scattering in liquid xenon ultimately apply substantial limits to this approach.

This work leveraged several features features of liquid xenon neutrinoless double betadecay experiments:

1. Cherenkov light is relatively intense in liquid xenon due to the high index of refraction of this dense liquid.

2. Liquid xenon's index of refraction is highly wavelength-dependent, resulting in visible-wavelength Cherenkov light traveling significantly faster than the scintillation photons, which occur in much larger numbers and would otherwise drown out the Cherenkov light. Using very fast photo sensors, Cherenkov light can be detected before the scintillation light arrives.

3. Neutrinoless double beta decay of xenon-136 occurs at an energy large enough to produce a significant Cherenkov signal.

4. Neutrinoless double beta decay produces two recoil electrons, typically traveling in different directions, instead of the single recoil electron produced by many backgrounds. This results in fewer Cherenkov photons produced by the double beta decay signal, as the production is nonlinear and greater for single electrons than multiple electrons sharing the same energy. It also results in different directional distributions of Cherenkov photons, with the single electron backgrounds generally producing Cherenkov light biased in the direction of the initial recoil.

The GEANT4 simulation included all of the above effects and was used to produce image-like data of the location of early-arriving Cherenkov photons in background and signal events. These images were analyzed using a fully-connected multilayer perceptron technique to optimally separate the signals from backgrounds.

Using this enhanced background rejection we estimated the improvement in the sensitivity to neutrinoless double beta decays. Table 1 shows these results. Our conclusion is that an improved sensitivity between 22 and 43% can be realized in a tonne-scale spherical detector. This improvement falls below naive estimates primarily due to electron scattering within the LXe which adds noise to the directional information in the Cherenkov light. The variance of kinematic outcomes of $0\nu\beta\beta$ decays also plays a role, as some $0\nu\beta\beta$ have a background-like single electron with most of the energy.

Table 1: Result of the study of Cherenkov 0νββ background discrimination in liquid xenon for various scenarios. In each case, the sensitivity improvement factor I is provided along with the number of Cherenkov photons per signal (0νββ) and background event, the signal acceptance, and the background rejection obtained from the MLP analysis. See text for detailed description of each scenario.

Case	Description	Sensitivity improvement	Signal photons/event	Background photons	Signal acceptance	Background rejection

Data Analysis: Machine Learning

The machine learning component of this LDRD was broken down into three sub-tasks described in the sub sections below.

Identifying Useful Variables for Single-ended event reconstruction (SEER) of PROSPECT

The PROSPECT detector suffered the breakdown of some sensor channels during its operation. This left the detector with regions observed by only one sensor, which limits the ability of PROSPECT to reconstruct the position and pulse shape of interactions in these regions. An earlier analysis treated these single-ended regions as “dead zones” and ignored the signals from the single sensor. This resulted in a reduced ability to reject backgrounds, as important background-identifying interactions would sometimes take place in the “dead zones.”

In this first sub-task, a boosted decision tree (BDT) was trained on an array of PROSPECT variables, including information from the single-ended sensor and nearby sensors. The BDT was trained using double-ended segments with one end artificially excluded from the data, while the event labels were provided from the standard analysis of those double-ended segments. In this way, machine learning could be employed without relying on simulated events.

This subtask concluded with the determination that single-ended analysis could be performed to efficiently tag neutron captures, despite the reduced capabilities of the single ended segments. Figure 1 shows how the single ended signals were the most important variables in this analysis, followed by variables relating to nearby segments.

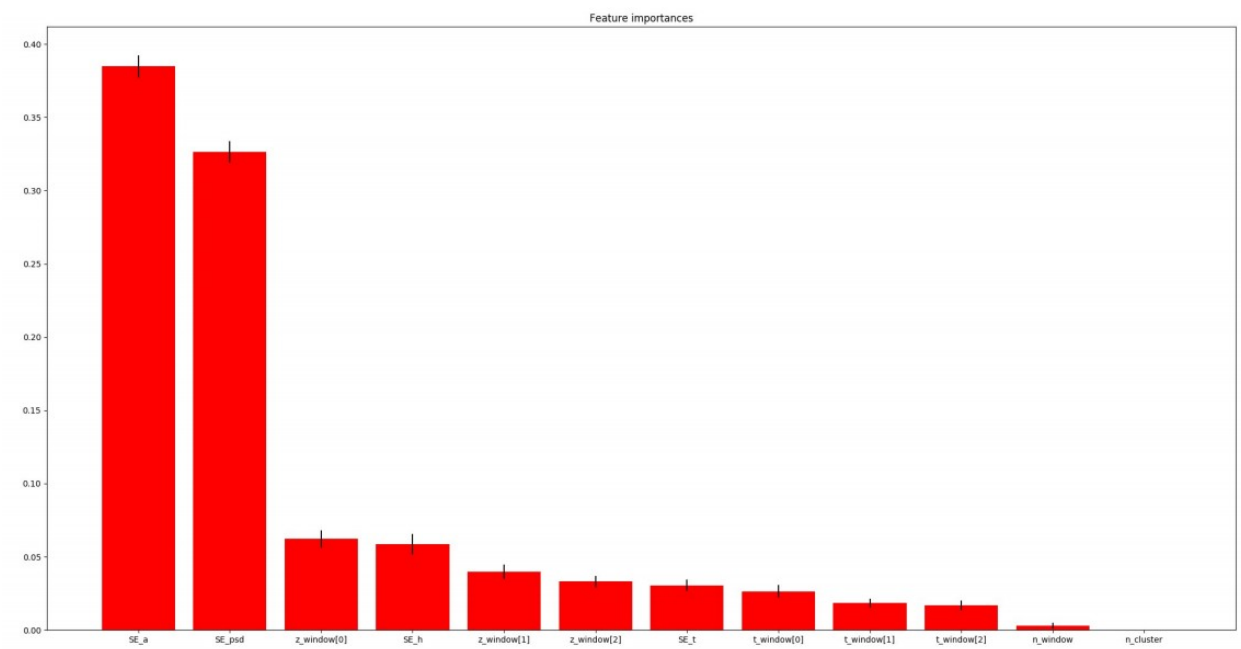

Figure 1: Variable importance in the PROSPECT boosted decision tree analysis

SEER implementation in PROSPECT analysis

Drawing on the results of the previous subtask, the most important variables identified in the boosted decision tree were used to establish selection rules for single-ended coincident neutron captures and single-ended simultaneous neutron recoils.

With these selection cuts, PROSPECT gained significant improvements in its background rejection, extending the physics reach of the detector and mitigating the effect of the equipment breakdown. The quantified degree of improvement will be reported in an upcoming publication.

The work conducted under this LDRD has also led to a PROSPECT collaboration effort to reconstruct the event energy in single ended segments using a similar BDT approach.

Enhancing nEXO's use of deep neutral networks

nEXO collaborators developed a deep neural network (DNN) classifier to separate neutrinoless double beta decays from backgrounds based on event topology, as detected in the charge sensors of nEXO. The DNN was successful in the collaborators' own tests but was unsuccessful when integrated into a collaboration-wide effort to quantify nEXO's scientific sensitivity.

As part of this LDRD, we investigated the root causes of this DNN's initial failure and developed solutions to integrate it more effectively with the rest of nEXO's reconstruction package. Collaborators used the solutions developed in this LDRD to demonstrate that the DNN, after the fixes, is able to significantly extend nEXO's sensitivity by enabling a multibin separation of signals and backgrounds.

Target Materials: Atomic Tritium

Summary

The Atomic Tritium task focused on the production of atomic tritium from molecular tritium in support of direct neutrino mass measurements. The most sensitive direct-mass measurements study the beta spectrum of tritium, and to improve the sensitivity for the next generation of experiments will require using atomic instead of molecular tritium to avoid the energy sharing associated with tritium decays bound to another atom.

We have developed a test stand at LLNL to measure the relative atomic production efficiency between three isotopes of hydrogen (protium, deuterium, and tritium). The system was commissioned and optimized with deuterium, producing a clear atomic deuterium signal. We

have also designed a recirculation system to purify and recondition the tritium supply in support of future work.

LDRD Accomplishments

The atomic tritium production test stand at LLNL was developed under the rubric of the Project 8 experiment, which is a direct neutrino mass measurement experiment that is envisioned to push beyond the bounds of KATRIN, the current state-of-the-art direct mass measurement. There are multiple tasks within Project 8 to create a full suite of dependent subsystems to produce atomic tritium, cool it to 30 mK, remove the tritium molecules and non-tritium impurities, and trap the atoms in a large (10-100 m3) volume.

The development of these subsystems will be carried out primarily with hydrogen or deuterium to reduce the cost and complexity of the work, but we must still have a reasonable expectation that the performance will extrapolate well to tritium. The LLNL test bed is intended to address this expectation by directly measuring three critical subsystems in the tritium chain:

1.Atomic tritium (T) production from tritium molecules (Th2) via thermal cracking, creating a beam of atoms at 2300-2600 K

2.Cooling the beam via wall interactions to room temperature, and eventually to 77 K or 10 K

3.Recirculating, reconditioning, and purifying the tritium source gas to maintain a supply of T2 that is stable on the order of 1-5 years

The heart of the LLNL test stand (Fig. 2) is a commercial hydrogen thermal cracker from Scienta Omicron, which consists of a tungsten capillary held at a positive bias, ringed by a single loop of a tungsten filament supplying electrons with a controllable emission current. By setting both the current and bias appropriately, the heating power can be calculated using a simple power = current × bias relationship. Electron bombardment on the capillary heats it up to 2600 K. Typically, the bias is maintained at a constant +1000 V, and by adjusting the emission current between 0 and 80 mA the cracker power ranges between 0 and 80 watts. Vendor characterization of the system is used to convert the heating power into a capillary temperature.

Fig. 2 shows the optimized test stand, along with the preliminary signal from deuterium atoms. The noise level of the signal can be seen in the small, nTorr-scale deviations seen within any given plateau, demonstrating an atomic deuterium signal-to-noise ratio of approximately 30 at full cracker power. The steps visible in the degenerate D1 and H2 partial pressures are from starting the cracker power at 80 watts and stepping down to 0 watts in 10-watt increments.

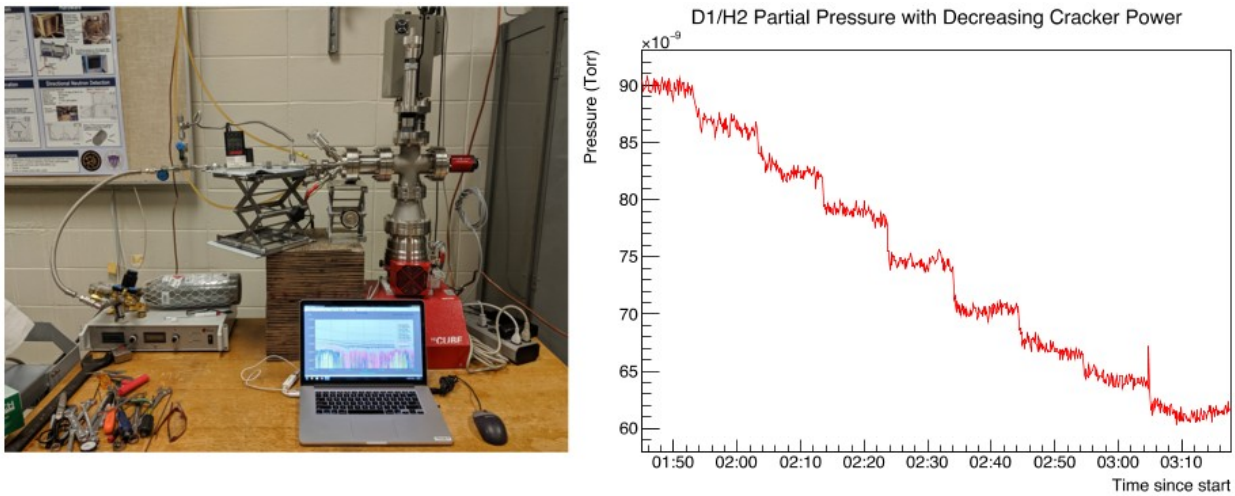

Figure 2: LLNL test stand (left) and deuterium signal (right). The deuterium signal is the strength of the signal at m/e = 2, which is degenerate with a signal from molecular hydrogen, H2. When the thermal cracker power is off, we read the baseline H2 partial pressure to be 60 nTorr. When the cracker power is at maximum, the signal is 90 nTorr suggesting an atomic deuterium partial pressure of up to 30 nTorr.

With the deuterium signal established, the next step in the work is to install a closed-loop tritium recirculation system that supplies clean, stable, purified T2 gas to the cracker, and measure the atomic signal as a function of both flow rate and cracker temperature. A draft design of the system, developed in consultation with subject matter experts at the LLNL tritium facility, is shown in Fig. 3. This system is anticipated to run with approximately 80 Ci of tritium gas, an amount compatible with the radiological budget of LLNL's building 194. The entire system requires a modest footprint of 20 ft2, allowing for a manageable safety enclosure with continual tritium air monitoring to detect accidental releases.

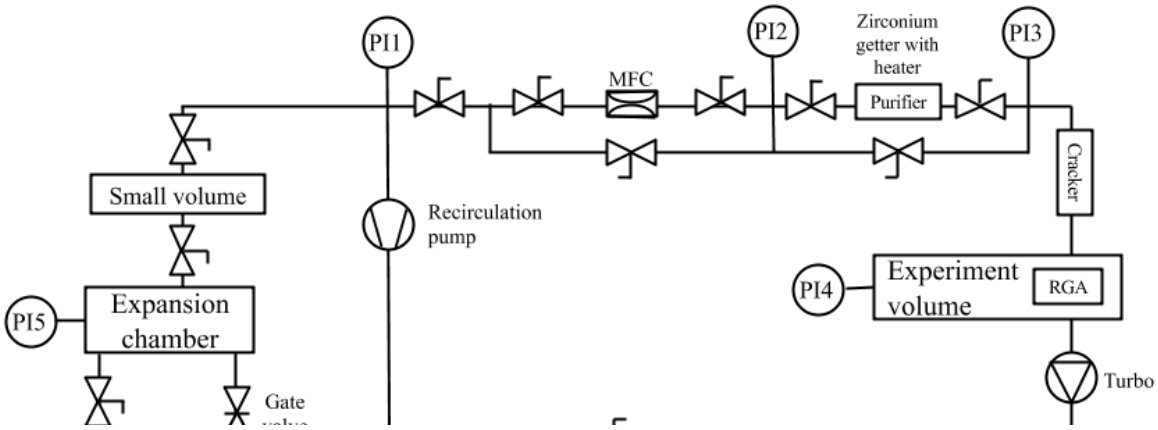

Target Mass: Xenon and Metal Organic Framework

<u>Motivation</u>

The neutrino quantum nature is very hard to measure, but is key to understanding the evolution of the universe, how mass is generated and is needed to complete the standard model of particle physics. The best method to measure the quantum nature is to look for a very rare decay called neutrinoless double beta decay. Many searches have been made and so for this decay has not been observed. The sensitivity to measure this decay is limited by the mass of isotope in a detector and this is a challenge to obtain. Xenon-136 is a excellent candidate for this measurement but the production is limited such that detectors larger than a few 10's of tonnes would not be possible without a new source of xenon.

Xenon is present in the atmosphere at a concentration of about 90 ppb. This xenon can be extracted with a properly designed adsorbent and an efficient cycle. The work in this LDRD is focused on studying an adsorbent that could work at a large scale.

We have chosen a metal-organic framework as the adsorbent since these materials have some of the highest ever reported values of surface area and porosity. However, in most cases a cost-effective route to produce metal-organic frameworks at commercial scale has not been developed due to the relatively recent time frame of discovery of this class of adsorbents. For example, the original synthesis of SBMOF-1 synthesis of 0.7 g/batch with relativly low yield.

Accomplishments

We first established in-house capability for producing SBMOF-1 which involved working through a variety of issue and commissioning a large Parr reactor. To move beyond research scale production of the adsorbent SBMOF-1, we have investigated the synthesis conditions that would result in optimized yield. The yield of the reaction with respect to the starting materials by a factor of 3X from the original procedure, without sacrificing the quality of the MOF produced. Our increase in yield was made possible by identifying (1) the ideal ratio of metal to organic component for the synthesis reaction and (2) the optimal reagents/solvent ratio. The end result was a significant increase in the yield and can produce significant quantities of 200g per batch. This level was significant enough to make structured adsorbent beds to test the extraction of xenon from air.

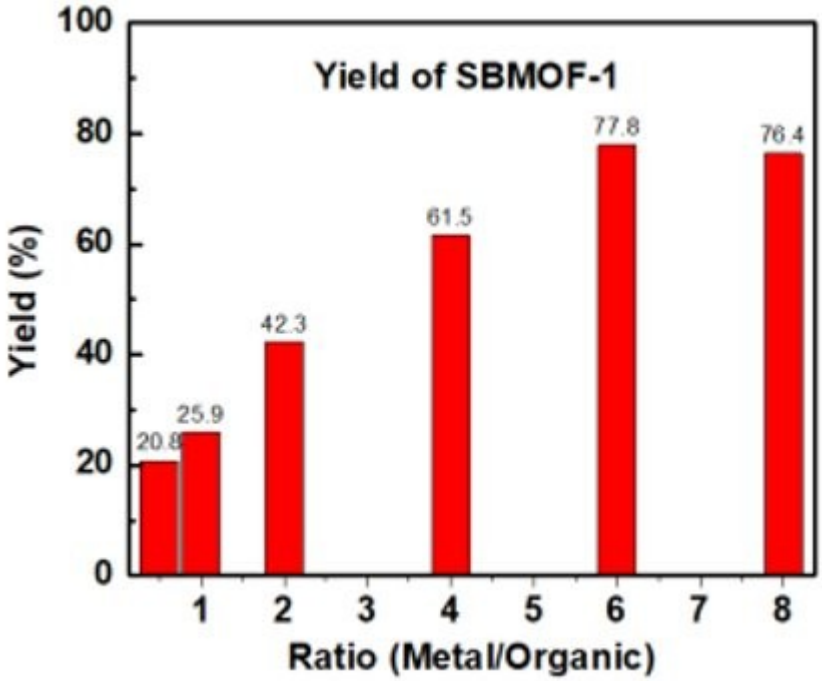

Figure 4: The yield of SBMOF-1 as a function of ratio of Metal to organic linker. A factor of about 3 increase in yield was accomplished in this work.

Another hurdle to commercial scale production of metal-organic framework materials is the cost of the organic component. Although the metal component of the MOF adsorbent is calcium – one of the most abundant, cheapest, and most environmentally friendly choices of metal – the organic component is relatively expensive. Preliminary results from synthesis performed in this work indicates that it is possible to decrease the cost of the organic component, 4,4'-sulfonyldibenzoic acid, of our adsorbent material by a factor of ∼ 5. The organic component can be obtained in a simple, one step synthesis from a readily available and inexpensive starting material.

Mission Impact

This project supports the NNSA's goal to reduce nuclear dangers by providing expert knowledge and operational capability for nuclear threat response. The measurement techniques we develop will find applications in many areas including antineutrino-based reactor monitoring projects, nuclear forensics detection technology, and nuclear cross section measurements of interest to the NNSA. Our research supports the Lawrence Livermore National Laboratory's nuclear, chemical, and isotopic science and technology core competency, as well as the Laboratory's nuclear threat reduction mission research challenge.

Conclusion

This large collection of work establishes a strong base of neutrino work at LLLNL. We expect this will lead to developments in a number of directions. We are a strong candidate to lead the nEXO project for neutrinoless double beta decay at the tonne scale as well as a number of other neutrino projects.

References

Brodsky, J.A., et al. 2019. "Background discrimination for neutrinoless double beta decay in liquid xenon using cherenkov light", Nuclear Instruments and Methods in Physics Research Section A: Accelerators,Spectrometers, Detectors and Associated Equipment, 922:76–83, April 2019. https://doi.org/10.1016/j.nima.2018.12.057, LLNL-JRNL-761641

Publications and Presentations

Publications:

Brodsky, J.A., et al. 2019. "Background discrimination for neutrinoless double beta decay in liquid xenon using cherenkov light", Nuclear Instruments and Methods in Physics Research Section A: Accelerators,Spectrometers, Detectors and Associated Equipment, 922:76–83, April 2019. https://doi.org/10.1016/j.nima.2018.12.057, LLNL-JRNL-761641

Albert, J.B., et al. (nEXO collaboration) 2018. “Sensitivity and discovery potential of the proposed nEXO experiment to neutrinoless double beta decay”, Phys. Rev. C 97, 065503. https://doi.org/10.1103/PhysRevC.97.065503, LLNL-JRNL-737682-DRAFT

Alamre, A. et al. (nEXO collaboration) 2018, “nEXO Pre-Conceptual Design Report”, arXiv:1805.11142v2, LLNL-TR-752007-DRAFT

A.A. Esfahani et al., 2019, ”Electron radiated power in cyclotron radiation emission spectroscopy exper- iments”, Physical Review C 99, 055501 (2019).

Presentations:

Heffner, M. 2018, ”The nEXO Experiment: A Tonne Scale Majorana Neutrino Search” Invited talk American Physical Society, Division of Nuclear Physics Oct 2018.

Stiegler, T. 2019, ”Improved Sensitivity of nEXO to Neutrinoless Double Beta Decay”, APS April Meeting, March 2019.

Stiegler, T. 2019, ”The nEXO Experiment”, Conference on Science at the Sanford Underground Research Facility, May 2019.

Stiegler, T. 2019, ”Improved Modeling of the nEXO De- tector for Neutrinoless Double Beta Decay”, LLNL’s 2019 Postdoc Symposium June 2019.

Kazkaz, K. 2018, “Project 8”, American Physical Society, Division of Nuclear Physics, Oct 2018.

Notes to the Editors

none