Medium-duty **U**rban **R**ange **E**xtended **C**onnected **P**owertrain

Final Scientific Technical Report **December 15, 2020**

Federal Agency:	U.S. Dept. of Energy
Nature of Report:	Final Scientific / Technical Report
EERE Award #:	EE0007509
Prime Recipient:	Robert Bosch LLC
Project title:	**M**edium-duty **U**rban **R**ange **E**xtended **C**onnected **P**owertrain
Principle Investigator:	Matt Thorington
Partners:	Morgan Olson
	VOSS Automotive, Inc.
	University of Michigan
	National Renewable Energy Lab

Table of Contents

Acknowledgment 3
Disclaimer 3
Acronyms, Abbreviations and Units 4
Executive Summary 6
Accomplishments 8
Project Activities 9
Task 1 – Simulation Modeling Environment Development 9
Subtask 1.1 – Develop Class 4 Delivery Truck Simulation Model 9
Subtask 1.2 – Develop 2PG Hybrid Drive Simulation Model 12
Subtask 1.3 – Integrate 2PG Hybrid Drive into Vehicle Model 14
Subtask 1.4 – 2PG Hybrid Drive Topology Evaluation 16
Task 2 – Design Supervisory Control Algorithms 18
Subtask 2.1 – Develop rule based model for powertrain system control 18
Subtask 2.2 – PHEV operating strategy to maximize full electric effectiveness . . . 19
Task 3 – Develop Battery Management System Algorithms 21
Subtask 3.1 – Develop Physics-Based Battery Model 21
Subtask 3.2 – Develop SOC/SOH Estimation Algorithms 22
Task 4 – Hybrid Drive Definition, Hardware Design, Procurement and Manufacturing . 22
Task 5 – ECU/VCU HW & SW Development 23
Task 6 – Validate Supervisory Control Algorithms 24
Task 7 – Further BMS Algorithms Development 28
Subtask 7.1 – Develop Power Prediction Algorithm 28
Subtask 7.2 – Develop Charging Algorithm 28
Task 8 – Hybrid Drive System Design 28
Task 9 – Electronic Horizon Controls Integration 32
Subtask 9.1 – Input Study 32
Subtask 9.2 – Interface/Interaction Definition with Supervisory Controller 32
Task 10 – Powertrain and Aftertreatment System Development 34
Subtask 10.1 – Downsized Engine Calibration 34
Subtask 10.2 – Aftertreatment System Verification 34
Subtask 10.3 – VCU and ECU Software Implementation 35
Subtask 10.4 – Integrated Powertrain Calibration Optimization 40
Task 11 – Powertrain Integration 42
Subtask 11.1 – Packaging Study 42
Subtask 11.2 – Sub-System Integration 42
Task 12 – Calibration and Controls Optimization 44
Subtask 12.1 – Powertrain Calibration 44
Subtask 12.2 – Vehicle Safety and Monitoring Concept Development 44
Task 13 – Fuel Economy Testing 44

Overall Project Summary 46
Final Powertrain System Description 46
Key Results Summary 47
PHEV Conversion Process in Pictures 48
Collaboration Summary with Other Institutions 50
Project Outputs 51

Acknowledgment

This material is based upon work supported by the Department of Energy under Award Number DE-EE0007509.

Disclaimer

This report was prepared as an account of work sponsored by an agency of the United States Government. Neither the United States Government nor any agency thereof, nor any of their employees, makes any warranty, express or implied, or assumes any legal liability or responsibility for the accuracy, completeness, or usefulness of any information, apparatus, product, or process disclosed, or represents that its use would not infringe privately owned rights. Reference herein to any specific commercial product, process, or service by trade name, trademark, manufacturer, or otherwise does not necessarily constitute or imply its endorsement, recommendation, or favoring by the United States Government or any agency thereof. The views and opinions of authors expressed herein do not necessarily state or reflect those of the United States Government or any agency thereof.

Acronyms, Abbreviations, and Units

Abbreviation	Description
1D 3D	One or Three Dimensional
2PG	Dual Planetary Gear
AC/DC	Alternating Current/Direct Current
BCM	Body Control Module
BP	Budget Period
BSFC	brake-specific fuel consumption
CAD	Computer Aided Design
CD CS	Charge depleting Charge sustaining
CSHVC	City Suburban Heavy Vehicle Cycle
DP	Dynamic Programming
E/E	Electrical/Electronic
ECMS	Equivalent Consumption Minimization Strategy
ECU	Engine Control Unit
eCVT	Electro Continuously Variable Transmission
EM 1 or 2	Electric Motor
EV	Electric Vehicle (used as EM)
g	gram
GNG	Go-No Go Decision Gate
HEV	Hybrid Electric Vehicle
HHDDT	Heavy Heavy-Duty Diesel Transient (Test Cycle)
HTUF4	High Efficiency Truck Users Forum - Class 4
HV	High Voltage
HVBP	High Voltage Battery Pack
HVIL	High Voltage Interlock
HW	hardware
ICE	Internal Combustion Engine
INVCON	Inverter Converter
kg	kilogram
kph	kilometers per hour

kW	kilowatt
kW-hr (also kWh)	kilowatt-hour
l	liter
MD/HD	Medium Duty/Heavy Duty
MEV	Motor Electric Vehicle 1 or 2 (used as EM)
MEV MS	Motor Electric Vehicle during mode switch (used as EM1)
MG	Motor Generator 1 or 2
MPC	Multi-Pack Coordinator
MPG	miles per gallon
MPGe	miles per gallon diesel equivalent
mph	miles per hour
MURECP	Medium duty Urban Range Extended Connected Powertrain
NACV	North American Commercial Vehicle Show
Nm	Newton-meter
NREL	National Renewable Energy Laboratory
NYCC	New York City Cycle
OBCM	On-Board Charging Module
P2	Hybrid architecture in which a clutch is between the engine and the motor / generator
P4	Hybrid architecture in which electric machine is integrated in the rear axle or in the wheel hub
PHEV	Plug-in Hybrid Electric Vehicle
PS	Powersplit
rpm	revolutions per minute
s	seconds
SAE	Society of Automotive Engineers
SMG	Separate Motor Generator
SOC	State of Charge (HV battery)
SOH	State of Health (HV battery)
SOPO	Statement of Project Objectives
SW	software
UDDS	Urban Dynamometer Driving Schedule

VCU	Vehicle Control Unit
VTO	Vehicle Technologies Office

Executive Summary

The project goal is to develop and demonstrate a Class 4 delivery vehicle that reduces fuel consumption by 50% or more when compared to an equivalent vehicle with a conventional internal combustion engine (ICE) powertrain driven on a comparable duty cycle. This shall be achieved using a plug-in hybrid electric (PHEV) configuration that optimizes the efficiency of the ICE. The proposed solution aims to be commercially viable for fleets to procure the system without additional incentives. To accomplish this, commercialized light-duty vehicle electric drive components shall be used. A PHEV configuration for Class 4 MD/HD vocational vehicles using commercialized light-duty vehicle electric drive components will require the development of a new topology for the hybrid powertrain applicable to medium-duty vehicles. Prior research indicates that an identified novel power split device could provide a fuel economy improvement potential of up to 51%. Utilizing an advanced battery management algorithm that will allow operation closer to the battery limits, the project will minimize battery capacity to achieve the desired performance results while maintaining the cost target for high commercialization. The solution must be cost effective to purchase and integrate into a Class 4 delivery vehicle, deliver the intended fuel economy improvement, and perform as well, or better, than the current conventional ICE powertrain.

MD/HD vehicles typically require higher power, which is one factor that results in high costs for the powerful electric machines typical in larger HEV/PHEV systems. A key element in the project is the use of commercially available Bosch electric drive components (e.g., motors, batteries, and power electronics) from the larger passenger vehicle segment. This leverages the economies of scale to decrease cost and improve reliability beyond current purpose-built low-volume commercial vehicle components. These innovations will result in a game-changing PHEV system that meets DOE's 50% fuel consumption reduction target, grants the vehicle an uncompromised driving range, and achieves the cost point for widespread adoption.

The project was divided into three distinct phases as outlined below.

Phase 1: Powertrain development. An innovative PHEV powertrain has been developed which can reduce fuel consumption reduction by over 50% in charge sustaining mode when utilizing a multi-mode powersplit transmission with integrated electric motors. Over 18 million designs were evaluated against given collocation, functional, and performance attributes, yielding 83 feasible designs. Of those 83 configurations, 14 were estimated to meet or exceed the program objective in charge sustaining mode. Design label 698b was selected as the target architecture for the integration and demonstration phases of the project. Greater than 56% fuel consumption reduction was achieved in simulation when operating in charge sustaining mode (~19 MPG). The flexible multi-mode/powersplit transmission also enabled an estimated all-electric range of greater than 60 miles, at an energy efficiency of 1.51 miles/kW-hr (56 MPGe) on the target drive cycle City Suburban Heavy Vehicle Cycle (CSHVC).

Phase 2: Powertrain integration. Utilizing the selected design for the target architecture, the integration phase of the PHEV powertrain commenced. Supervisory control algorithms, battery management system, thermal energy management, and vehicle control strategy were integrated with the conventional powertrain controller and are now being further refined. The mechanical design and assembly of the hybrid drive system were completed along with the manufacturing and delivery of two prototype transmissions. All PHEV solution components and a downsized diesel engine were integrated onto the prototype vehicle. A dual 24V power pack was installed for electro-hydraulic power steering and braking while the ICE is not

running. Thermal management is accomplished using an integrated fluids box from VOSS including new thermally controlled valves. The fluids box was installed on the chassis, filled and commissioned for initial chassis dyno testing. E/E Architecture was frozen and the 12V, 24V, and HVIL (High Voltage Inter-Lock) systems were integrated into a single Power Distribution Unit for convenient access and space considerations. In parallel, engine dyno test results with a downsized diesel engine assembled to a hybrid transmission successfully demonstrated mode switches between one and two motor EV as well as Powersplit during transient cycles. A successful demonstration of the prototype vehicle operating under its own power was executed as well to complete phase 2.

Phase 3: Powertrain demonstration. This phase included build, test, and deploying a prototype vehicle that was demonstrated. This validated the system benefits and confirmed the solution met the requirements for this industry segment. Due to delays and challenges with on-road testing, along with resource constraints due to COVID-19, BP3 was rescoped to stop after chassis dyno testing (modified GNG#3 milestone). The project successfully demonstrated the fuel economy savings target while operating the CSHVC on a Bosch chassis dyno.

Accomplishments

BP1 Milestone	Type	Description	Final Status
Validated baseline simulation model	Technical	Simulation baseline model fuel consumption prediction within 10% of baseline vehicle measurement results	Achieved
Validation of 2PG hybrid powertrain	Technical	Quantify superior benefits of the 2PG hybrid powertrain as compared to other architectures	Achieved
Defined hybrid powertrain topology and components	Technical	Component selection for the proposed solution to achieve the desired fuel consumption reduction and cost target	Achieved
Developed control-oriented transmission models	Technical	Implementation of control-oriented models while capturing the primary transmission dynamics	Achieved
Powertrain Architecture Defined	Go/No Go	Modeling results show the architecture can achieve a 50% reduction in fuel consumption	Achieved
BP2 Milestone	**Type**	**Description**	**Final Status**
Validated supervisory controller with hybrid configuration	Technical	Supervisory controller validation in GT-SUITE is completed and produces preliminary fuel economy results	Achieved
Completed 3D CAD model of the final design solution	Technical	Virtual packaging study completed in the vehicle space and installation locations for all new components defined	Achieved
Finalized driveline design	Technical	The hybrid drive system design, integration, and optimization will include an optimum final drive ratio(s)	Achieved
Rolling chassis operational under its own power	Go/No Go	Class 4 PHEV delivery truck is assembled and basic drive functionality is demonstrated	Achieved
BP3 Milestone	**Type**	**Description**	**Final Status**
Completed chassis dynamometer fuel consumption testing	Technical	Chassis Dyno testing at Bosch completed to validate achievement of a 50% fuel consumption reduction	Achieved

Project Activities

Task 1 – Simulation Modeling Environment Development

Subtask 1.1 – Develop a Class 4 Delivery Truck Simulation Model

One dimensional vehicle simulation models, both in Matlab and GT Suite, were developed and validated. The baseline vehicle parameters are provided in table 1.

Freightliner Custom Chassis Corp. MT45 + Morgan Olson Route Star Walk-In Delivery Cabin	Value/ Unit
Aerodynamic drag coefficient* Frontal Area (Cd*A)	5.4 m^2
Mass, loaded	16,000 lb (tested at 15,410 lb)
Tire diameter, loaded	0.48m
Tire rolling resistance: Overall/ Drive/ Steer	7.38/ 7.5/ 7.1 kg/ton
Auxiliary consumed power	1,300 watts
Center of Gravity Location, height/horizontal	51 inches/ 108 inches
Wheelbase	178 inches
Internal Combustion Engine	2011 Cummins 6.7l ISB- 200hp @2,400 rpm/ 560 lb-ft @ 1600 rpm
Transmission- type, ratios, and efficiency	Allison 1000 HS 5 speed automatic 3.1, 1.81, 1.41, 1, 0.71 & 98%
Final Drive Ratio & Efficiency	4.3:1 & 95.5% (assumed)

Table-1: Baseline Vehicle Input Parameters

Simulation model (figure 1) result shows 8.2 mpg predicted by simulation compared against 8.5 mpg real world.

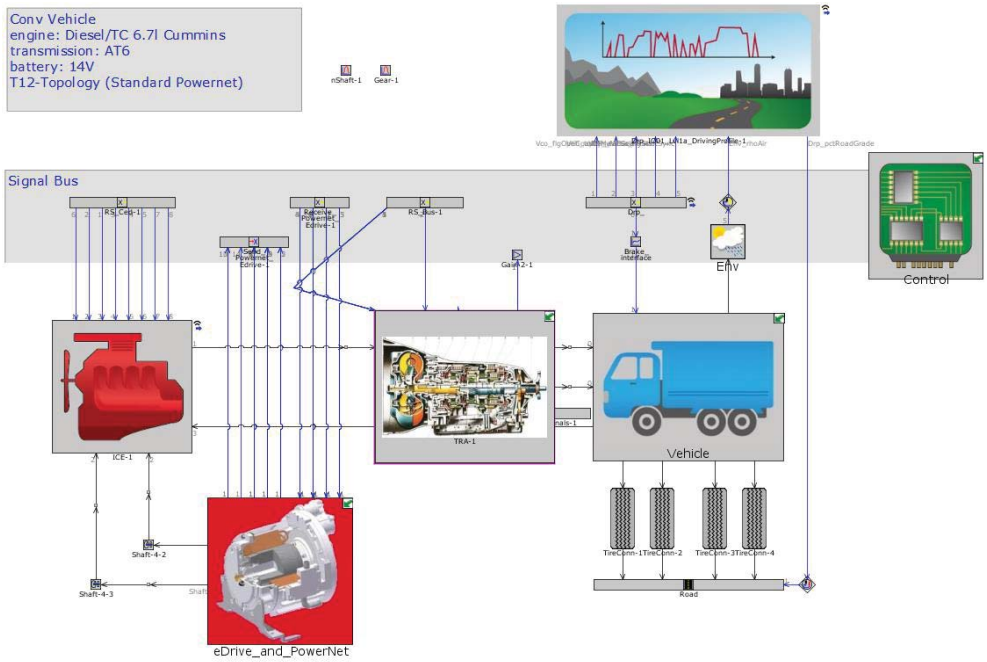

Figure 1. Class 4 Delivery Truck simulation model (GT-Suite)

Evaluation of composite drive cycle NREL's Fleet DNA database shows that the average fuel economy for Class 4 delivery van is 8.5 mpg with a wide variation based on the route and daily distance between 4 and 12 mpg (figure 2). The following applicable drive cycles were considered: CSHVC, HTUF4, NYCC, UDDS, and HHDDT. Again using the Fleet DNA database, 81 class 4 to class 6 delivery trucks were selected as the most representative applications. After analyzing almost 75,000 miles over 1600 days of real-world data, the City Suburban Heavy Vehicle Cycle (CSHVC) was identified as the target drive cycle, when comparing kinetic intensity, stops per mile, etc. to the average of all the field data trips as shown in figure 3.

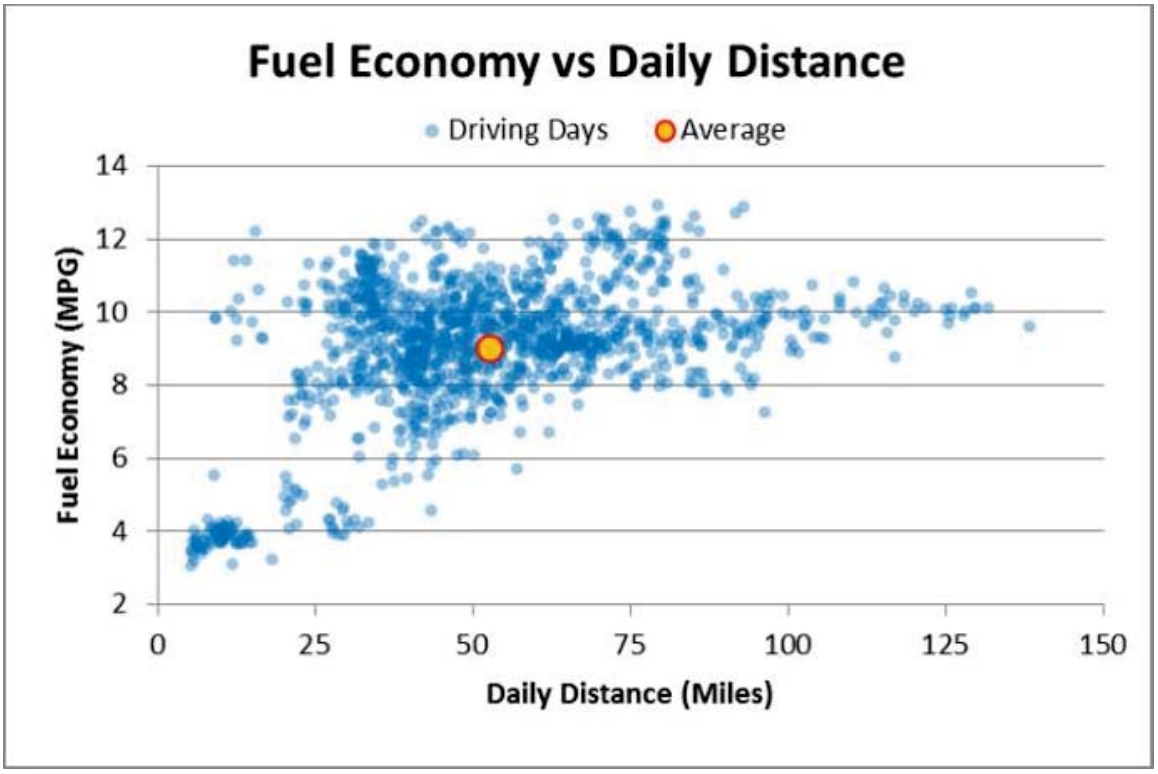

Figure 2. Fleet DNA database of fuel economy against driving distance

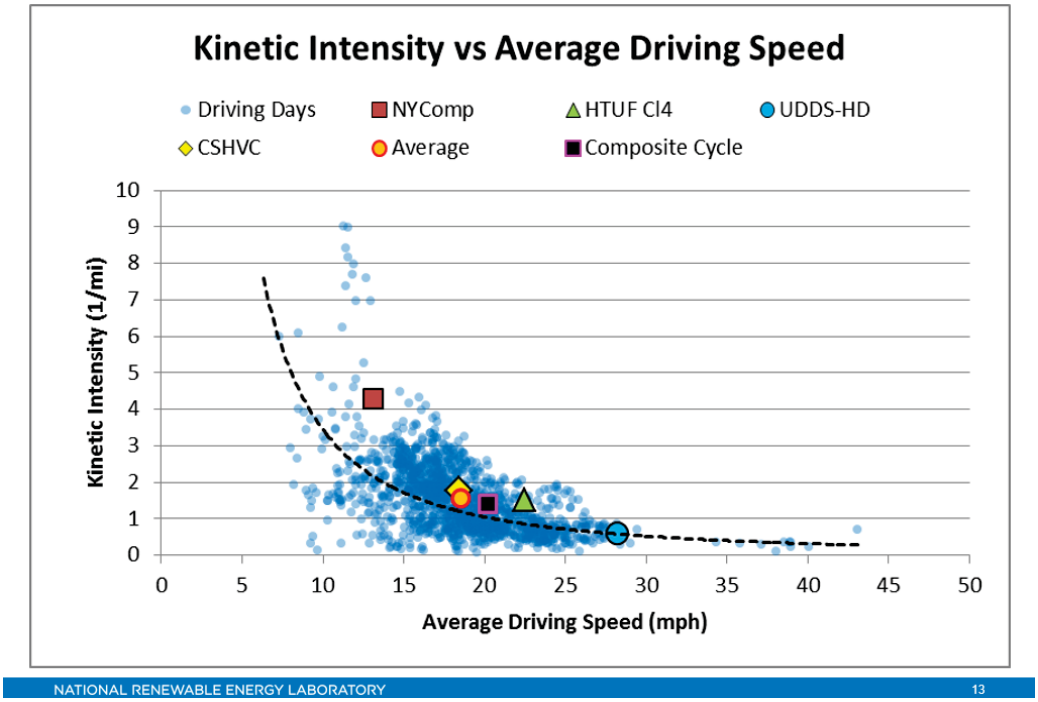

Figure 3: Target Drive Cycle Evaluation- Kinetic Intensity vs Average Driving Speed

For a previous study, NREL had performed chassis dyno fuel consumption measurements for a comparable chassis running the CSHVC. The baseline chassis had a measured fuel consumption of 0.765 gallons for the 6.68-mile cycle, resulting in a fuel economy of 8.7 MPG. The optimal Matlab model, which uses dynamic programing to determine the optimal gear selection, resulted in a simulated fuel economy of 10.3 MPG, which is ~17% better than the baseline measurement. Since the Matlab model will only be used to compare 2PG architectures amongst each other, this deviation was deemed acceptable. A more physical based vehicle model was also created in GT suite, which resulted in a much more accurate fuel economy of 8.3 MPG.

Subtask 1.2 – Develop 2PG Hybrid Drive Simulation Models

The top dual-planetary gear (2PG) architectures, which meet or exceed the baseline vehicle performance while also reducing the fuel consumption by >50% were identified using the following methodology:
Step1: Utilizing an automated modeling algorithm, all possible designs were modeled given the boundary conditions of two planetary gear sets, three speed/torque inputs (ICE & two electric motors), one output shaft to the rear axle, and three clutching elements to enable multi-mode operation.
Step2: Conduct screening of all designs based on the desired attributes, such as no clutch on output shaft, ability to drive in reverse with engine on, powersplit mode, etc. Over 18 million designs were evaluated.
Step3: Conduct screening of all designs based on the desired vehicle performance and acceleration parameters. The key parameters identified by the core team are given in table 2 below.

Performance Criteria	Performance Requirement	Baseline Vehicle Results
0-60mph acceleration, level road	< 30.0 s	22.4 s
0-30mph acceleration, level road	< 12.0 s	6.1 s
40-60mph acceleration, level road	< 18.0 s	13.0 s
Launch to 5m on 12% grade	< 60.0 s	2.7 s
Minimum grade-ability @40mph	7% grade	15.1% grade

Table 2: Basic Performance Parameters

Step 4: Conduct a fuel economy evaluation for all designs that meet the criteria defined in steps 1-3. The fuel economy evaluation is conducted in a two-step process; first utilizing Matlab dynamic programming to backwards calculate the optimum operating mode and torque split among the ICE, motor, and generator. With the optimum inputs, a forward-looking simulation model is used to determine the cycle fuel consumption.

Eighty-three designs were identified which met the baseline vehicle performance results. A range of beta ratios (2:1 - 4:1) and final drive ratios (3.91:1 - 4.78:1) were evaluated. The results are shown in figure 4:

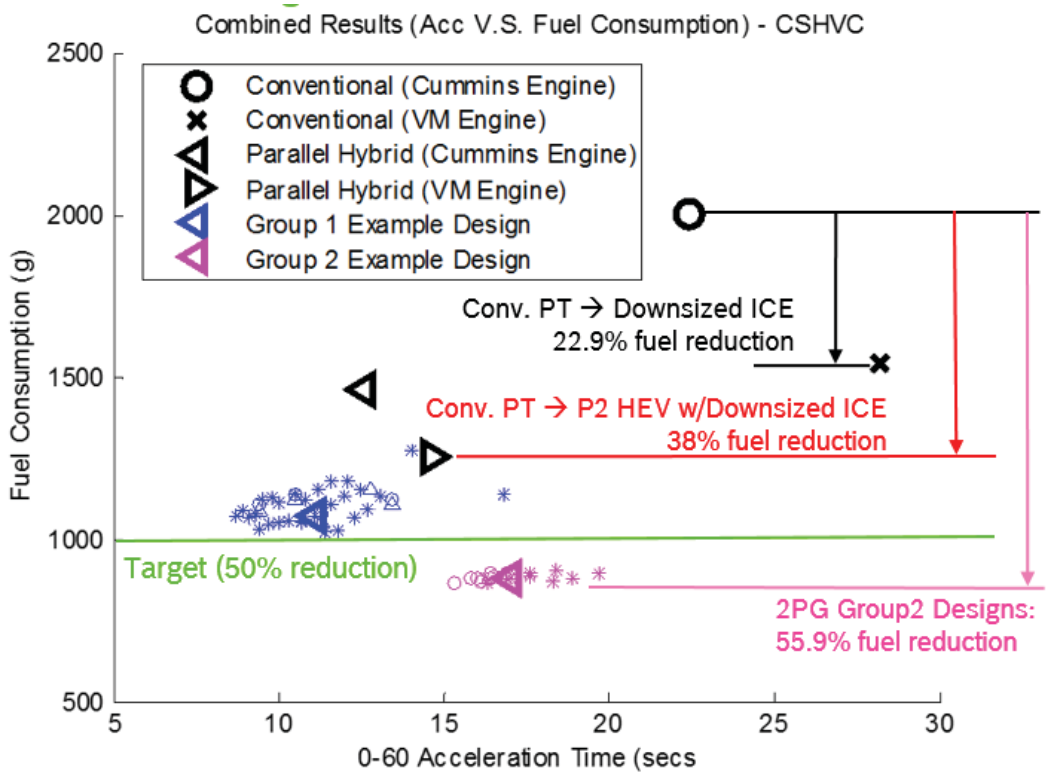

Figure 4: Fuel Economy Evaluation Results (Charge Sustaining Mode)

Group 1 example designs all share the following commonalities: ICE on carrier node, torque multiplication on output, and an ICE torque multiplication on the output node. Group 2 example designs, which achieved >50% fuel consumption reduction with 0-60 mph acceleration times of 15-20 s, all shared the following commonalities: ICE on the ring node, a torque multiplication on output, and no engine torque multiplication on the output node. Based on expert discussions with the core team at BOSCH and Ricardo regarding control design, manufacturing, and performance, six designs were selected from the group 2 example designs. These are named design labels 23, 37, 94, 649, 698, and 789. These designs were subjected to in-depth analyses, including mode transition evaluations, component speed/torque load collective evaluations, and finally patent research. Only design 23 was found to be a potential for patent infringement and therefore excluded. The other five designs were unique enough to warrant a provisional patent application submission.

For the final design selection, detailed transmission modeling and control strategy development would be required, and therefore only a maximum of three designs could be selected, in order to meet the design freeze deadline. Designs 37, 94, and 698 were selected for the detailed modeling and controls development phase.

Subtask 1.3 – Integrate 2PG hybrid drive into the target vehicle model

Based on the optimized input trajectories obtained from the dynamic programming simulations for different drive profiles, a simple rule-based controller was derived. This controller determines the operational mode of the transmission (i.e. the clutch states) based on current battery state of charge, demanded torque and vehicle speed. Once the operational mode is specified, simple rules are used to determine the torque split between the electric motors and combustion engine.

The initial simulation investigation yielded three preferred design architectures: 94b, 37b, and 698b. Initial focus is on design 94b with additional investigation into GT Suite model debugging (figure 5) causing a slight delay. The Matlab optimal model and GT suite physical model for design 94b have similar engine, motor, and generator operating points, however, the battery SOC and fuel consumption outputs, were not satisfactory enough to move on to design 37b. The team made up this delay by shortening the basic controls development time for 37b and 698b in half each since the three designs are relatively similar in their base layout.

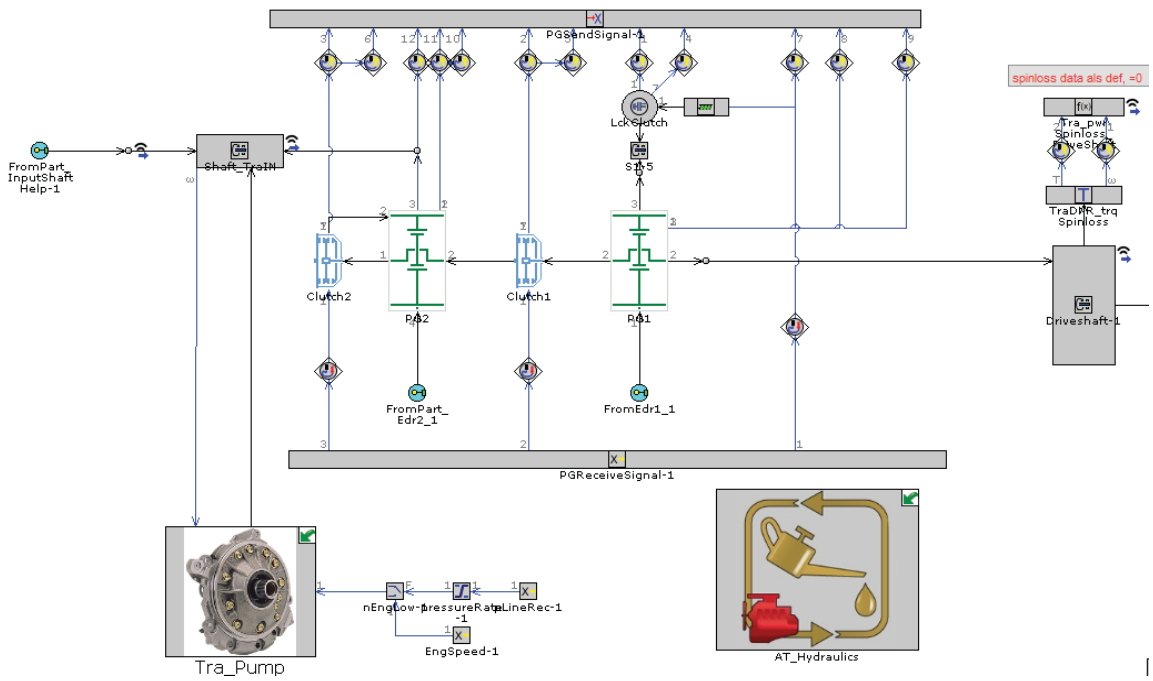

Figure 5: GT Suite Simulation Model- 1D Model of 2PG Transmission- Design Label 94

Fuel economy evaluations completed on NYCC, CSHVC, HTUF4, UDDS_HD, CARB_HHDDT. Design 698b performed much better on most of the cycles, especially those with lower average speeds (figure 6). The percent improvement compared to 94b was minimal for cycles with higher average speeds likely due to non-optimal control strategy (see chart below for summary of results).

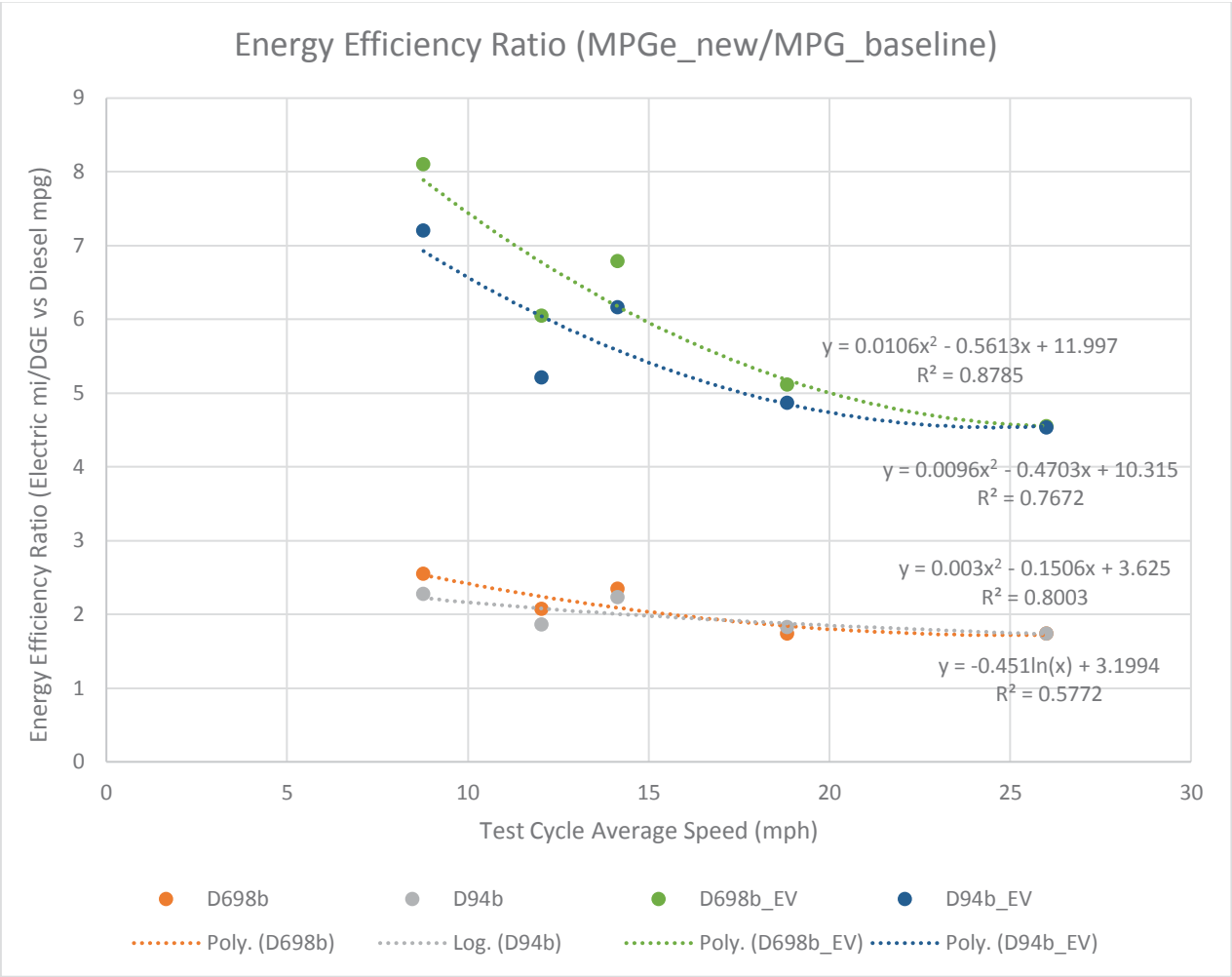

Figure 6. Fuel economy comparisons for numerous drive cycles – average speed against energy efficiency ratio

Both of the designs operating in charge sustaining mode achieved around 2x energy efficiency improvement (greater than 100% fuel economy improvement). With design 698b outperforming 94b. With the current battery size of 48 kW-hr both designs can drive each cycle on only electrical energy resulting in energy efficiency improvements ranging from 4.5x to 8x. On the NYCC cycle with the lowest average test cycle speed design 698b had an MPGe of 56.8 whereas design 94b only achieved 50.5 MPGe.

	0-60mph	0-30mph	0-15mph	40-60mph	40mph Gradeability	65mph Gradeability	Launch, Forwards	Top Speed, Overall	Top Speed, EV Mode	T (S
Grade	0%	0%	0%	0%	TBD	TBD	12%	0%	0%	
Target			5 seconds		2.50%	0.30%		80 mph	75 mph	4
Baseline										
D698b	19.99	8.77	4.7	8.17	YES	YES	YES	90.7	71.4	
D94b	20.86	9.7	5.69	8.08	YES	YES	YES	90.7	71.4	
D698b_EV	31.32	8.01	3.9	18.97	YES	YES	YES	0	71.4	
D94b_EV	46.14	12.76	6.17	26.83	No (max. 35mph)	YES	YES	0	71.4	

Table 5. Performance comparisons of designs 94b and 698b

Mode	94B		698B	
	Limit [kmph]	*Limiting factor*	*Limit [kmph]*	*Limiting factor*
2EV	115	Resistance torque. Realistic limit is 100 kmph.	119	Resistance torque. Realistic limit is 100 kmph.
1EV (EM1)	93	Resistance torque	93	Resistance torque
1EV (EM2)	71	Resistance torque	93	Resistance torque
Power Split	131	EM1 overspeeding	131	EM1 overspeeding
eCVT	146	Resistance torque	146	Resistance torque
Series	93	Same as 1EV (EM1)	93	Same as 1EV (EM1)
Parallel (1EM)	133	Resistance torque		
Parallel (2EM)	131	EM1 overspeeding		

Table 6. Limiting factors for different operating modes for designs 94b and 698b

Acceleration and grade-ability performance along with maximum velocity capabilities were evaluated for both designs. As shown in tables 5 and 6, design 698b outperformed 94b. Because of both of these evaluations, design 698b was selected.

Subtask 1.4 – 2PG Hybrid Drive Topology Evaluation

To demonstrate the capability of the 2PG PHEV system, other more conventional PHEV architectures were benchmarked via Matlab DP simulations with results summarized in figure 7. With a downsized ICE, a P2 hybrid can achieve a 38% reduction in fuel consumption on the CSHVC. For the P4 hybrid configuration a motor sizing study was also conducted. The lowest fuel consumption was achieved with the largest motor studied, namely a 250 kW/ 610 Nm (peak) variant. Even with a much more capable electric motor than used for the 2PG powersplit transmission (2x 80 kW/200 Nm) a fuel consumption reduction of only 34.1% was reached, significantly less than the 2PG benchmark of around 55%

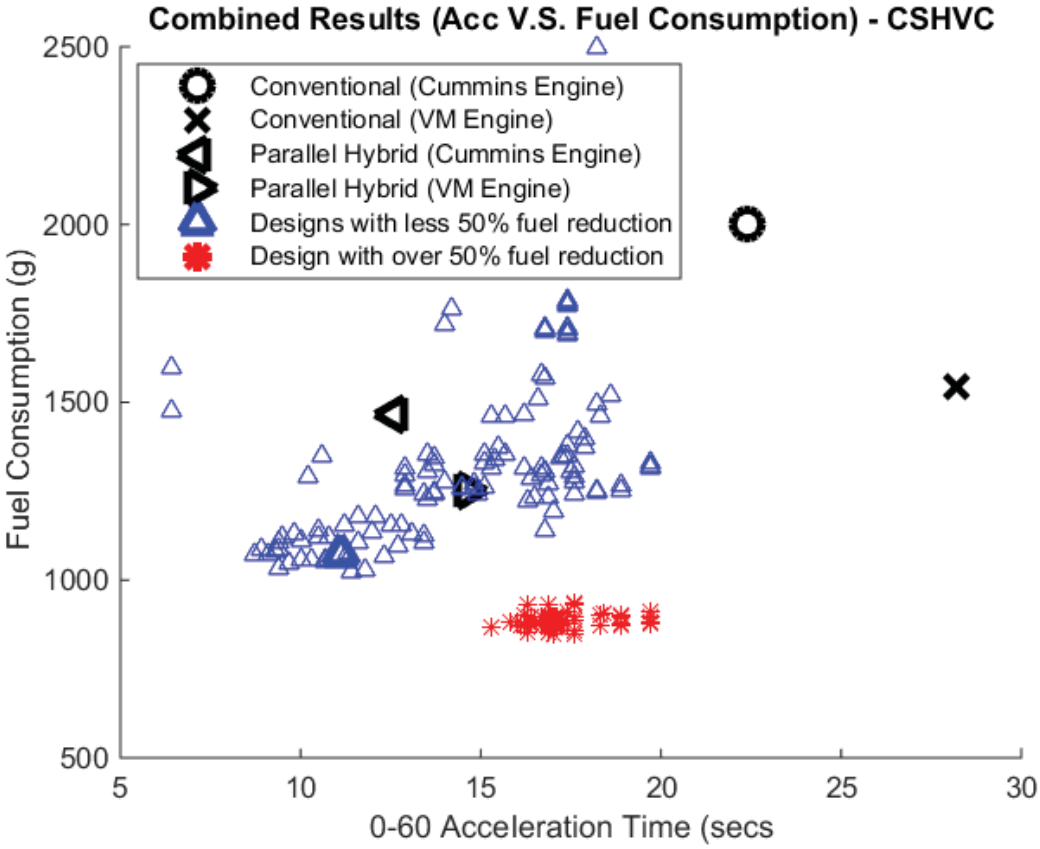

Figure 7. Fuel economy and Acceleration results for PHEV architectures

Evaluation of the fuel economy performance for e-axle/through-the-road hybrid systems was completed. A sweep of the single drive motor size was performed with the lowest fuel consumption achieved with the largest motor size available (figure 8). However, results were slightly worse than a P2 hybrid (1250 gram fuel consumption) and much worse than our proposed dual-planetary gear multi-mode system.

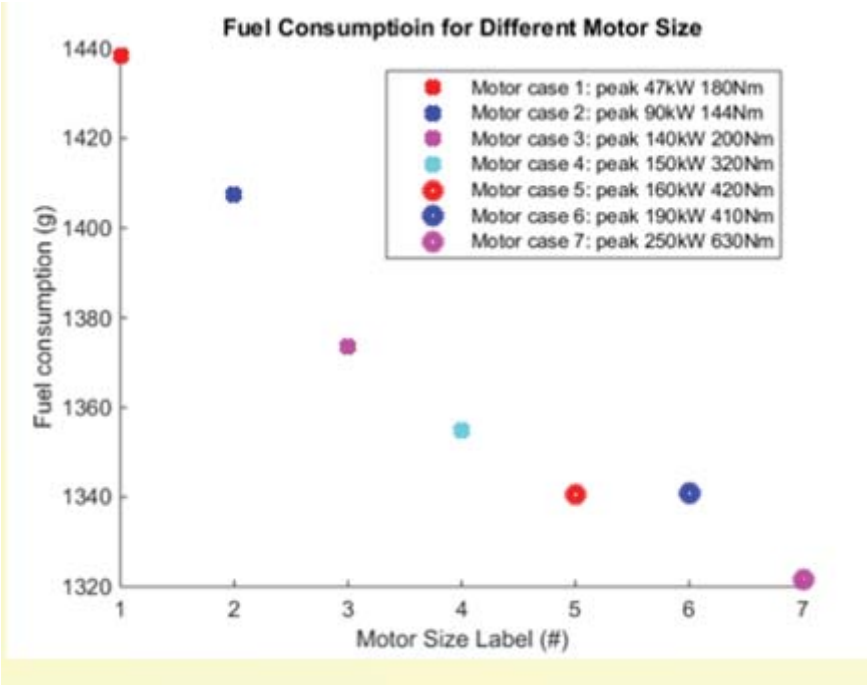

Figure 8. Single drive motor size against Fuel consumption

Task 2 – Design Supervisory Control Algorithms

Subtask 2.1 – Develop rule based model for offline control of the powertrain system including ICE and electric drive/transmission.

Utilizing Matlab dynamic programming (DP) the optimum mode selection for each drive cycle was determined (see figure 9). After intensive evaluation of these DP results, basic rules (rule-based) were developed to determine which mode should be selected depending on vehicle speed and torque demand. These rules were programmed in Matlab Simulink and then integrated into the GT Suite vehicle model. An overview of those rules (also depending on battery state of charge) are shown in figure 10 differentiating between a single electric motor (EV), both electric motors (2EV) and powersplit (PS) modes. The defined SOC areas/modes are “charging”, “sustaining” and “discharging”.

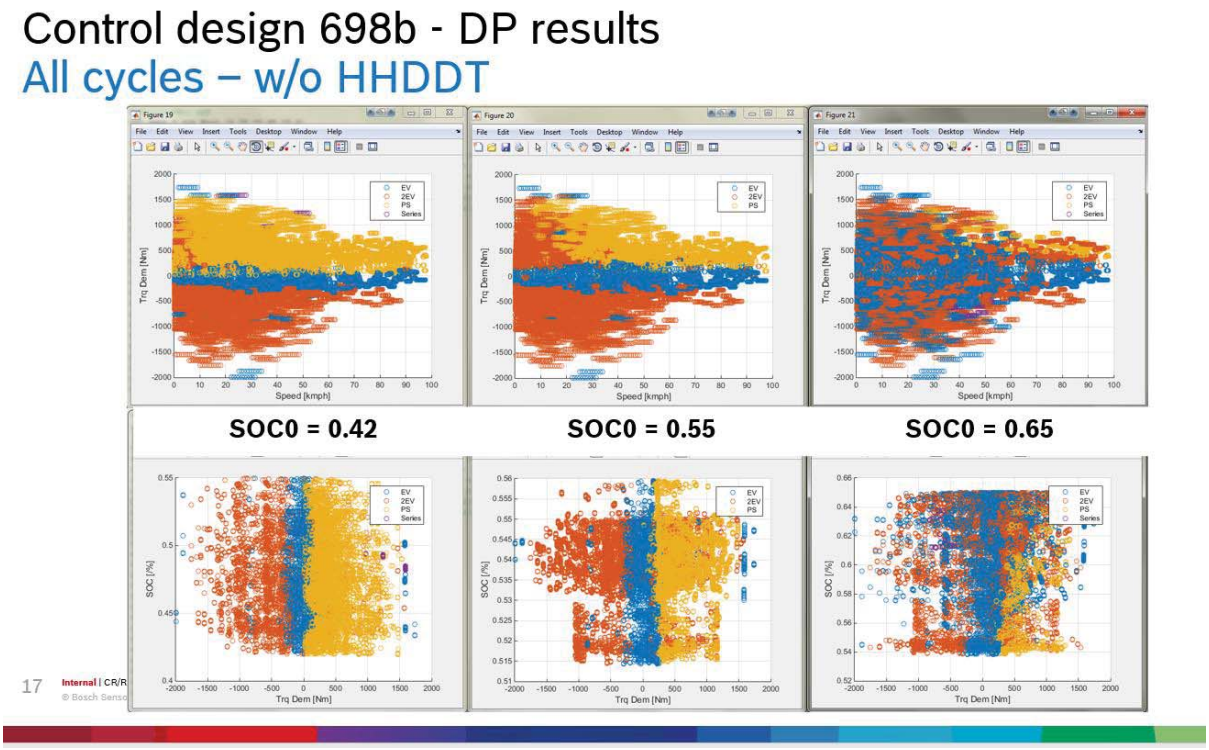

Figure 9. Dynamic Programming optimum mode selection for multiple drive cycles

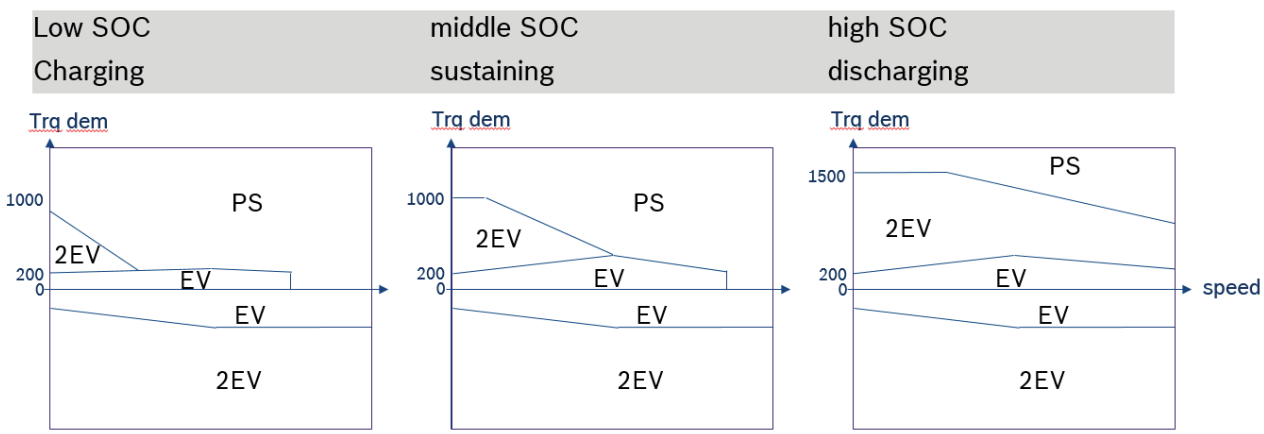

Figure 10. Summary of desired operating conditions for SOC and Torque/Speed combinations

Subtask 2.2 – PHEV operating strategy used to maximize effectiveness of the fully electric operation on the drive cycle

The initial rule-based controller was designed with the goal to minimize ICE fuel consumption, i.e., the speed/torque setpoint was selected based on the optimum BSFC curve. This strategy, however, was found

to have its limitations in that the electric motor that counters the engine in powersplit mode was being driven at higher torques for longer periods of time, which caused thermal issues within the motor.

A key benefit of the powersplit transmission, however, is that the powersplit operating point can be easily shifted to a higher speed/lower torque (equal power) points. An optimal powersplit control strategy was developed to perform an online optimization, taking into account various thermal and mechanical limitations (which arise at different times based on the cooling system performance, ambient conditions, time at higher motor speed/torque, etc.) with the results presented in figure 11. This strategy also aims to maximize the complete efficiency of the system, which may occur at a worse ICE BSFC point. Fuel economy simulation results for drive cycles evaluated in task 1.1 using the selected transmission design in both charge sustaining and charge depletion modes are shown in figure 12. In the majority of cases, the fuel consumption target (-50%) was achieved in charge sustaining mode and met in all cased in charge depletion mode.

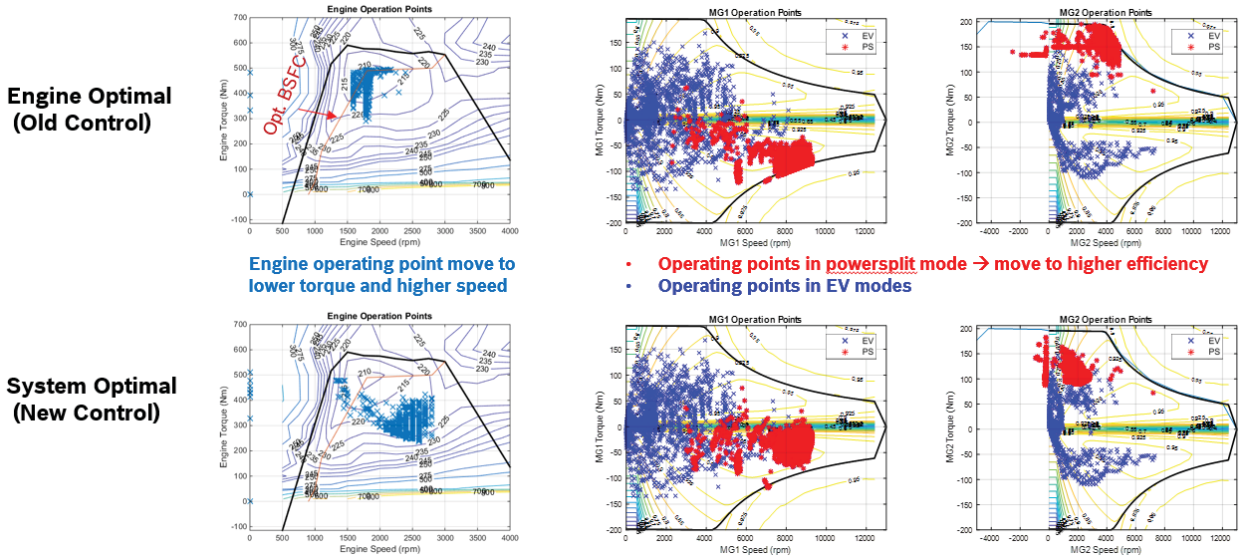

Figure 11: Optimal PHEV System Efficiency Controller Design

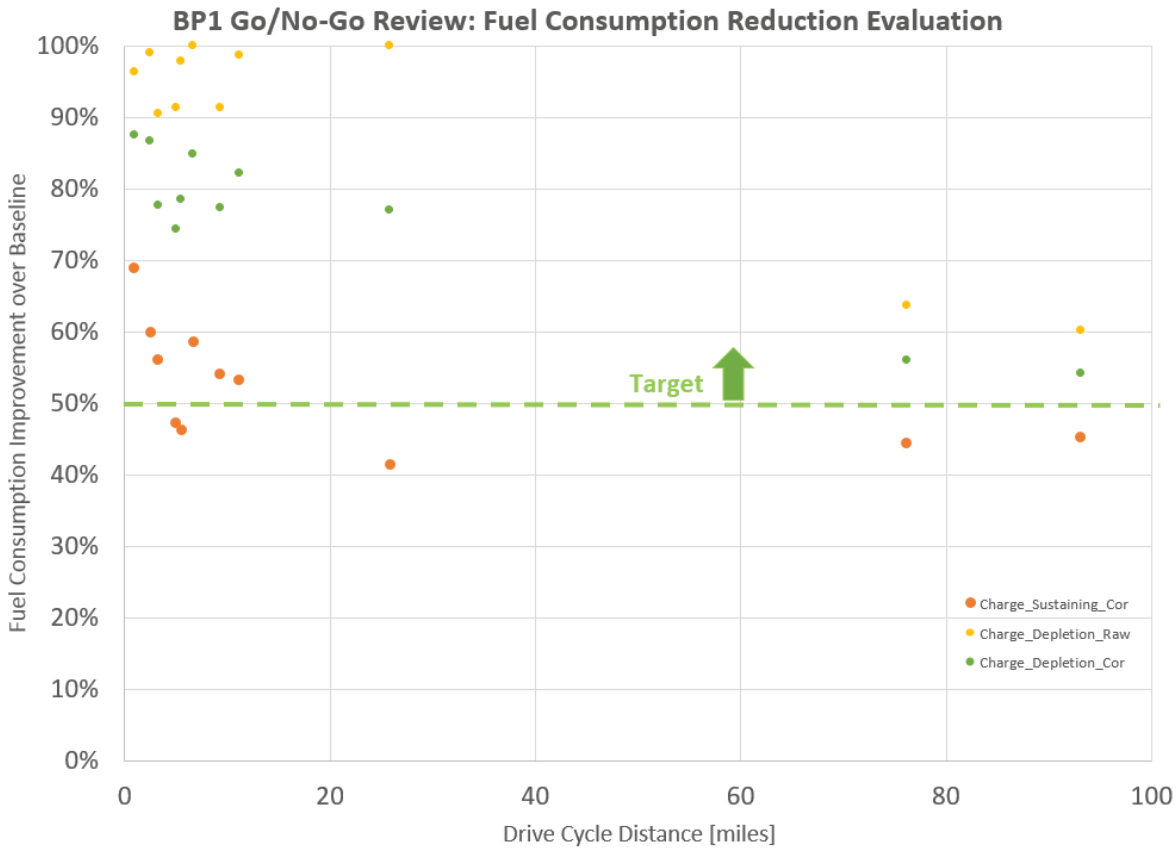

Figure 12. Fuel Consumption Reduction Target met on most cycles in Charge Sustaining Mode, but ALL cycles when considering Charge Depletion Mode

Task 3 – Develop Battery Management System Algorithms

Subtask 3.1 – Develop Physics-Based Battery Model

In order to allow two series production battery packs to operate in parallel, a gateway device/ functionality is required, so that 1) the VCU sees only 1 battery pack and 2) the contactor closing and additional safety features of each pack do not inhibit the functionality of the other pack. The Multi Pack Coordinator (MPC) was designed based on the existing systems and components. The BCM (Body Control Module) toolchain and development environment is understood and setup.

The Fiat500e battery modeling was required for determining limiting values for the model, such as limiting current, critical voltage, etc. conducted. Software development for enabling two packs in parallel continued, building upon the work completed in a previous internal project. In order to allow two series production battery packs to operate in parallel, a gateway device / functionality is required, so that 1) the VCU sees only 1 battery pack and 2) the contactor closing and additional safety features of each pack do not inhibit the functionality of the other pack.

Subtask 3.2 – Develop SOC/SOH Estimation Algorithms

Topic is no longer relevant, as series production battery packs and software were used. The SOPO was modified to remove this task since the work did not need to be performed for production packs.

Task 4 – Hybrid Drive System Definition, Hardware Design, Procurement and Manufacturing

The target PHEV system architecture was defined, as shown in figure 13. Two SMG180/120 electric motors (200 Nm/ 80 kW peak performance) with two AC/DC inverters were selected for integration with the 2PG transmission. These components were selected for two main reasons: they are readily available (Fiat 500e) and they demonstrate the flexibility of the transmission design.

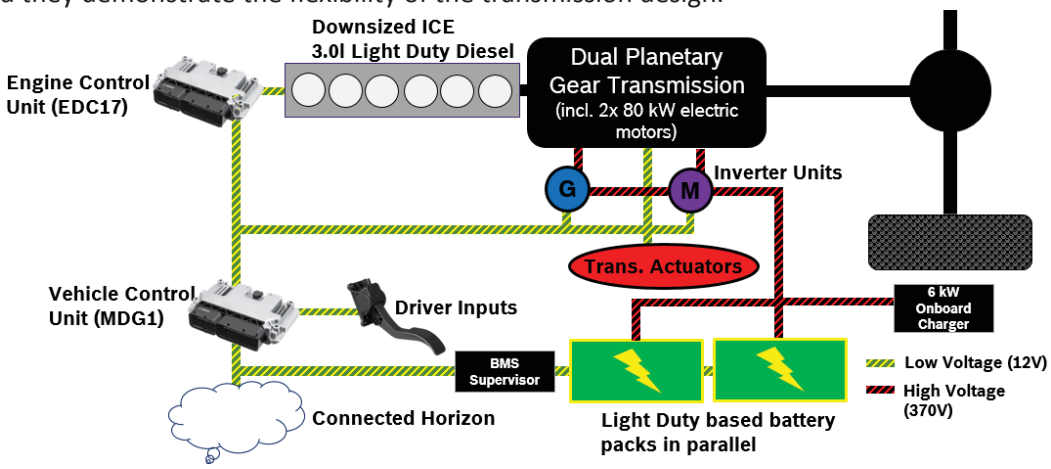

Figure 13: Optimal PHEV System Efficiency Controller Design

The transmission supplier Ricardo was engaged during earlier development activities, ensuring that the various transmission architectures that emerged from the concept selection were feasible to manufacture and control, based on their extensive transmission and electrical vehicle development experience. An-in-depth design review was conducted, where each of the three final designs were evaluated amongst each other and against the baseline transmission. 3D Models of each design were also created, as shown in Figure 14. Design 698b was selected due to its smaller packaging size, lower estimated cost, and higher efficiency.

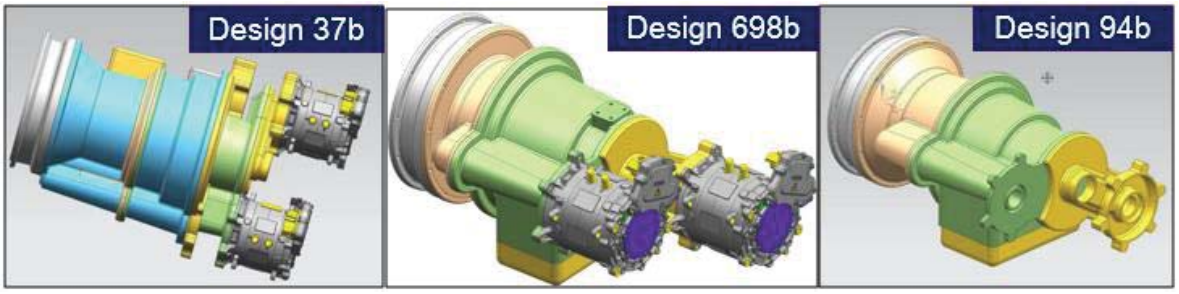

Figure 14: 2PG Transmission 3D Designs for Chassis Packaging Evaluation

Following the selection of the target transmission design, Ricardo began manufacturing of the design. The first prototype received along with the final transmission model are given in figure 15.

Figure 15 PHEV transmission model / first prototype

Task 5 – ECU / VCU HW & SW Development

The embedded controller hardware setup has been finalized as indicated in figure 13 shown in task 4. The PHEV controls are split between a VCU (Vehicle Control Unit), an ECU (Engine Control Unit), and a TDG1 (Transmission Controller). The PHEV energy management strategy was developed using a physics-based simulation environment, and were then transferred to the VCU embedded controller. Transmission clutch controls are being run on the TDG1 transmission controller, which allows us to use a single controller for all required actuators, instead of using separate modules to control transmission solenoids.

Model-based controllers for the power-split and electric-only torque paths run on the vehicle controller. The functionalities implemented by these controllers include optimal powertrain operating mode determination, component torque limit calculation, and dynamic component torque determination. Driver inputs from the pedal and gear lever are converted to desired torque requests for each of the powertrain components. These functionalities were verified on the powertrain dynamometer.

Interfaces for torque filtering and interventions were added to the torque path. These filter functions can be enabled if necessary on the vehicle to improve drivability. The differing dynamic responses of the electric motors and the ICE require careful coordination and calibration of the driver torque demand. Some of the torque interventions are not needed in Class 4 truck applications, but are included to enable applicability for other vehicle applications.

Task 6 – Validate Supervisory Control Algorithms

The model-based controllers will be tested on selected transmission designs and validated in GT-SUITE. Fuel economy results will be compared to the benchmark fuel economy numbers obtained from configuration optimization results in Task 1.

The model-based controllers developed in Budget Period 1 were further optimized and improved. Significant effort was spent to adapt the control strategy to ensure that it can be implemented in the embedded controller hardware for dynamometer and vehicle testing. This improved control strategy was tested using the physics-based vehicle simulation model developed in GT-Suite. Simulation results for fuel consumption in charge-sustaining mode are presented in figure 16 below.

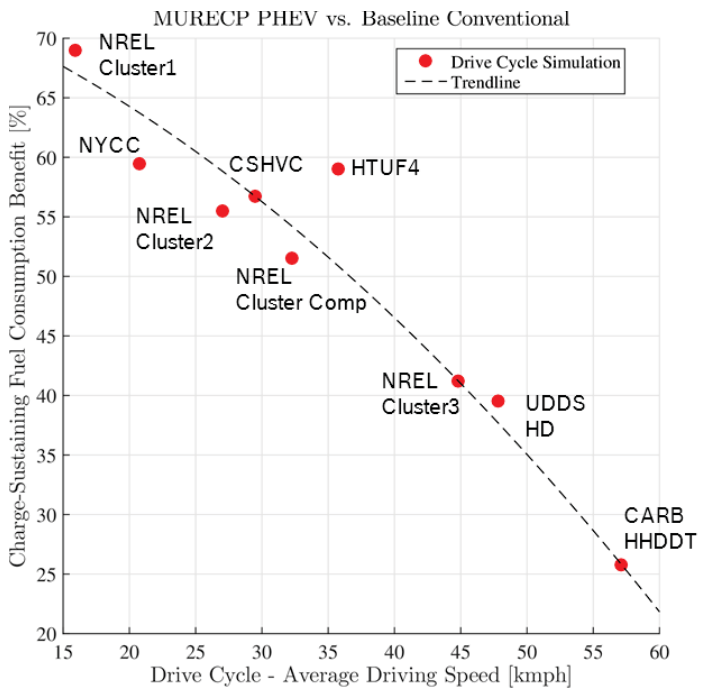

Figure 16: Simulation results – Fuel consumption improvement of the MURECP PHEV vehicle vs. the conventional baseline vehicle in charge-sustaining mode

Compared to the baseline conventional vehicle the MURECP PHEV vehicle shows good fuel consumption reduction. Focusing on the target CSHVC drive cycle, the system meets the >50% fuel consumption improvement goal

Fuel consumption simulation results show some reduction in savings based upon unfavorable transmission spin losses detected during initial dyno tests. The updated results include those losses and the impact of Equivalent Consumption Minimization Strategy (ECMS) for charge sustaining conditions as shown in figure 17.

Transmission loss investigation – updated fuel economy results

	AMR Results in 2018		updated transmission losses		updated transmission losses & **ECMS**		
Drive Cycle	**AMR PHEV Fuel Cons. [g]**	**AMR Fuel Cons. Savings [%]**	**PHEV Fuel Consumption [g]**	**Fuel Saving [%]**	**PHEV Fuel Consumption [g]**	**Fuel Saving [%]**	**Diff. to AMR Saving**
CSHVC	1113	56.7%	1307	49.2%	1240	51.7%	-5.0%
NYCC	463	59.5%	518	54.7%	471	58.8%	-0.7%
HHDDT	5925	25.8%	7217	9.6%	7225	9.5%	-16.3%
HTUF4	2090	59.0%	2425	52.5%	2341	54.1%	-4.9%
UDDS-HD	1135	41.2%	1371	29.0%	1362	29.5%	-11.7%
NREL_Cluster_1	262	69.0%	283	66.4%	265	68.6%	-0.4%
NREL_Cluster_2	702	55.5%	795	49.6%	737	53.3%	-2.2%
NREL_Cluster_3	1081	39.5%	1306	26.9%	1302	27.1%	-12.4%
NREL_Composite	2022	51.5%	2445	41.4%	2312	44.6%	-6.9%
Average		**≈ 51%**		**≈ 42%**		**≈ 44%**	**> - 7%**

Strategy: Start at 25% SOC. Aim to end at 25% SOC. Fuel consumption results correct for any deviation in final SOC vs. target SOC.

Figure 17: Charge-sustaining fuel economy predictions

In parallel, we continue the efforts to run the City Suburban Heavy Vehicle Cycle (CSHVC) with the real hardware accurately on the engine dyno. In previous testing, we used an open loop approach where we would set the transmission output speed and the accelerometer position (back calculated from desired transmission output torque). It was noted that while the dynamic content of the cycle was followed in detail, the actual peak torques were not achieved as shown in figure 18. To improve the match with the desired cycle we moved over to a closed-loop approach in which the pedal is the output of a PID controller that controls the measured dyno torque. While the results shown in figure 19 indicate a better match reducing the offset, the current PID settings in the test cell need to be re-evaluated and calibrated to be more dynamic. As additional powertrain dyno test results become available, alignment with the simulation model will be rechecked.

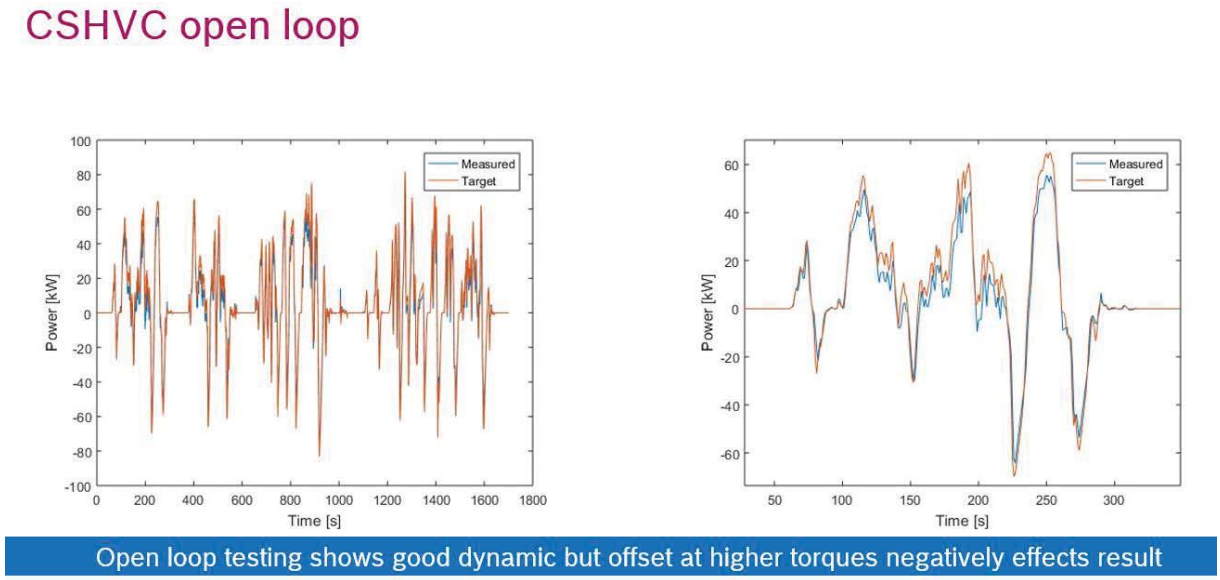

Figure 18: CSHVC cycle with open loop dyno pedal

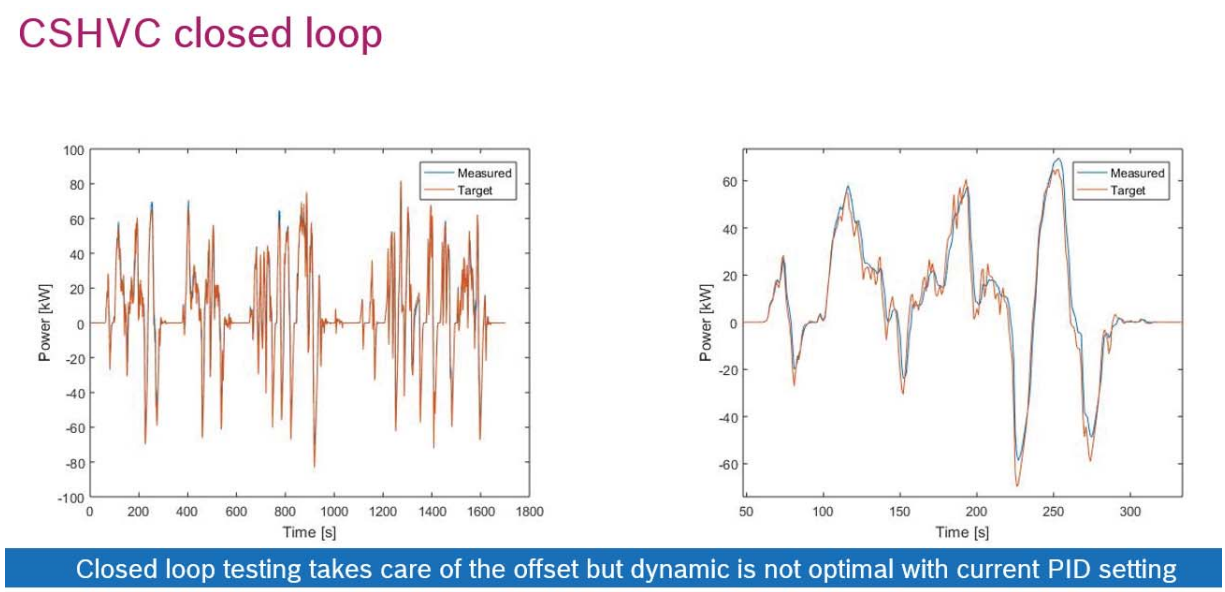

Figure 19: CSHVC cycle with closed loop dyno pedal

Updated comparisons for powertrain dyno results against GT-SUITE simulations during City Suburban Heavy Vehicle Cycle (CSHVC) show very good alignment (figure 20) following the implementation of a closed-loop pedal control in the dyno with improved PID settings in the test cell to better match dynamic content. Both consumption and regenerative (negative) energy follow simulation results.

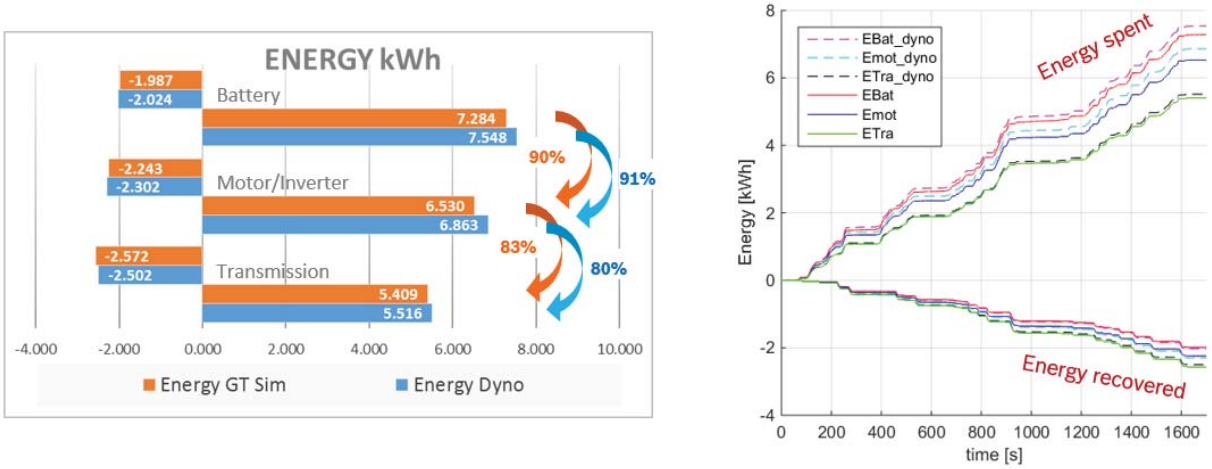

Figure 20: Mutual verification of simulation and powertrain dyno measurements

Simulation results evaluating the impact of various strategies show that the new rule-based strategy closely follows the overall system optimal results (figure 21) and represents a rather small software change effort. For these reasons, the new rule-based strategy was implemented into the project. While Equivalent Consumption Minimization Strategy (ECMS) showed favorable results, ECMS was not included in this demonstrator project due to effort and timing involved.

Optimization results (simulation)

Power strategy:

SOC	Min power	Power offset
Mid, high	26.8 kW	20.5 kW
Low	74.5 kW	34.5 kW

- New rule-based strategy comes close to online system optimal strategy
- No big SW changes required

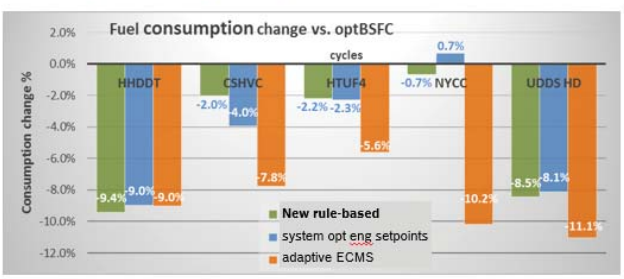

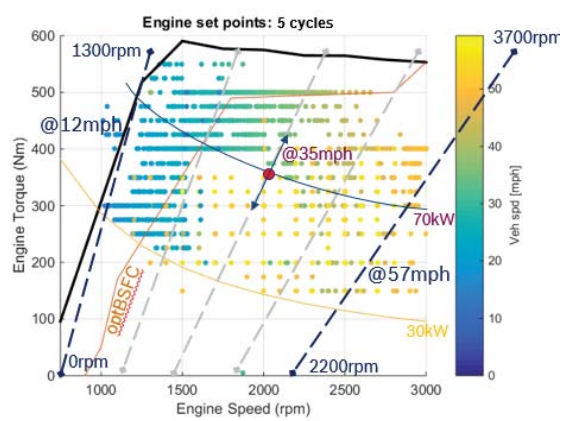

Figure 21: New rule-based strategy shows close alignment with system optimal strategy

Task 7 – Further BMS Algorithms Development

Subtask 7.1 – Develop Power Prediction Algorithm

Multi-pack coordinator (MPC) software will evaluate current state of each pack (SOC, voltage, current limits, temperature, cell balancing, etc.) and provide the battery 'system' state to the VCU. Multi-pack coordinator implementation with parallel battery packs was unsuccessful during this demonstrator project. The team reconfigured the SW, thereby reducing the complexity for implementation, calibration, and troubleshooting. The truck operated with only one battery pack. Decision was made to complete the demonstration project with this limitation. The battery state of single pack used was communicated directly to the VCU (with MPC removed).

Subtask 7.2 – Develop Charging Algorithm

Item is no longer required, as production packs without fast charging capabilities was used. The SOPO was modified to remove this task.

Task 8 – Hybrid Drive System Design

Thermal management system layout is defined and include new thermally controlled valves developed by VOSS. Modine finalized the specification for the 4x 24V electric fans, which are mounted to the new PHEV LT radiator. Detailed 1D thermal system model in GT-suite (figure 22) constructed with results showing that thermal system strategy is able to control high voltage battery pack and power electronic temperatures within the target limits (35° and 65°C respectively) for the three steady-state operating points considered.

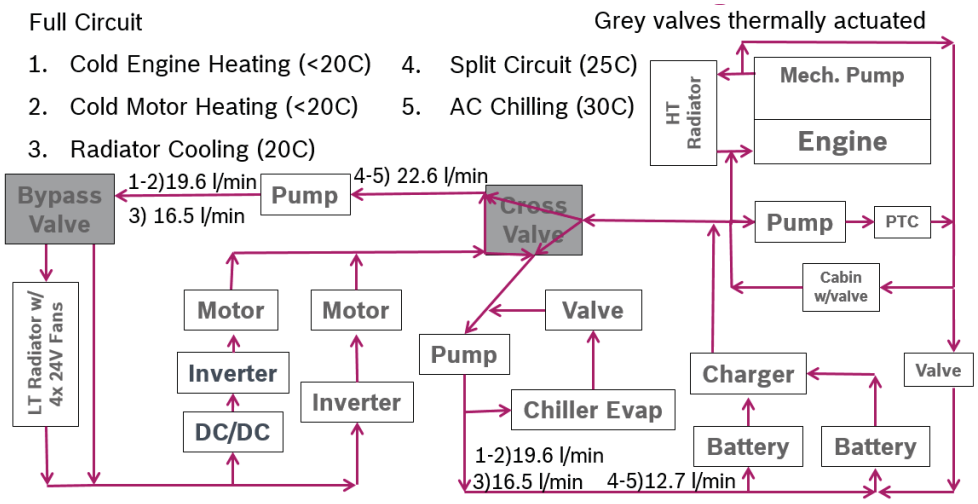

Figure 22: Thermal system design w/ two thermally actuated control valves and five modes

Thermal management system layout defined. A system schematic is shown in figure 23, including new thermally controlled valves developed by VOSS.

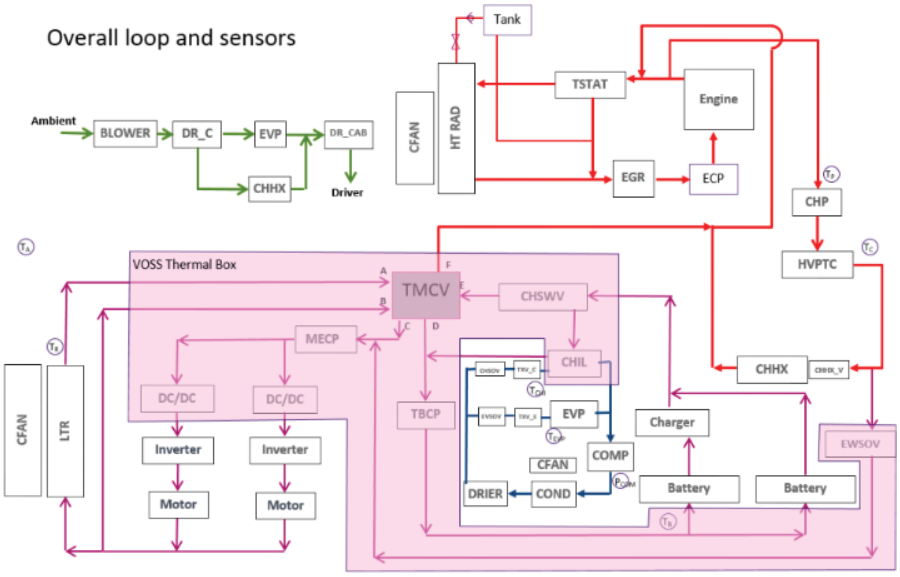

Figure 23 Thermal system design with VOSS thermally actuated control valve and five modes

VOSS integrated the majority of the thermal system into a "Fluids Box" that will ease integration onto the chassis. The fluids box layout was consolidated, reducing the space consumed by approximately ½ as shown in figure 24. Installation of the box onto the chassis will occur after the body is reattached to the chassis. As a result, function testing of the thermal system was completed after the fluids box and hydraulic and electronic connections was completed prior to body installation.

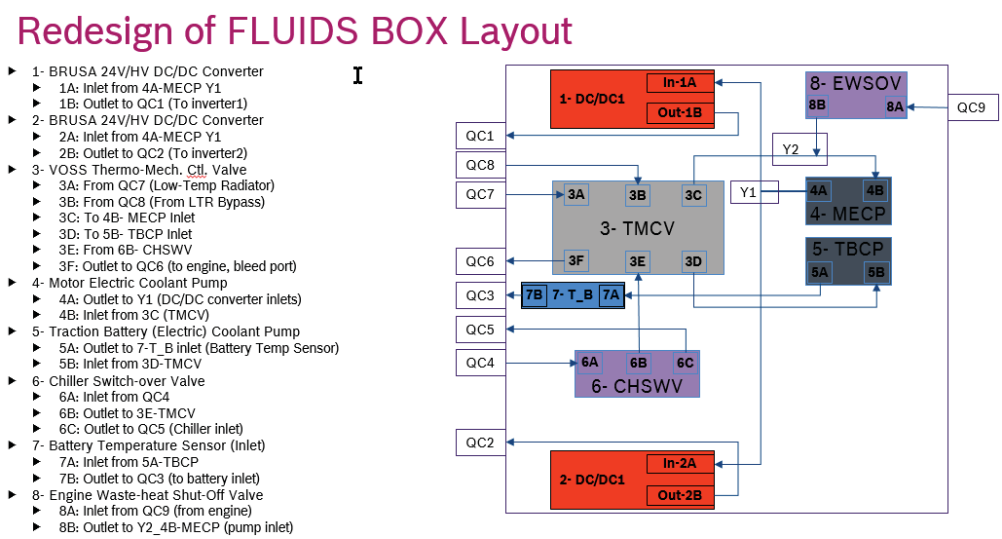

Figure 24: Fluids box redesign to improve space utilization, ease assembly on truck chassis

VOSS fluids box was installed onto the chassis and electrically connected. HVIL (high voltage interlock) system integrated into a redesigned 12V/24V Power Distribution Unit. Through the redesign, three separate boxes were combined into one housing all the low voltage fuses and relays added for the system as shown in figure 25.

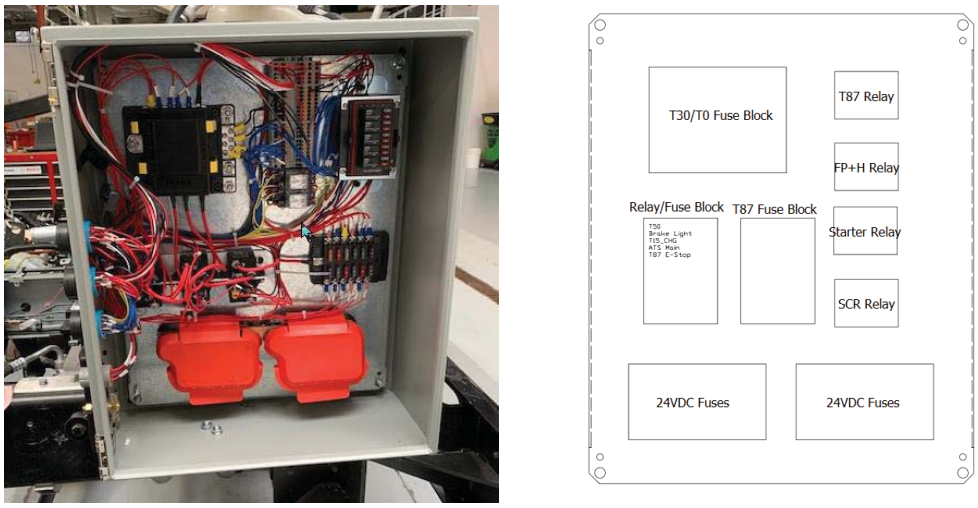

Figure 25: Consolidation of separate 12V 24V and HVIL fuse relay boxes into one

Electrical/ Electronic (EE) Architecture system network diagram is shown in figure 26 together with the HVIL diagram and the HV Topology in figures 27 and 28 respectively.

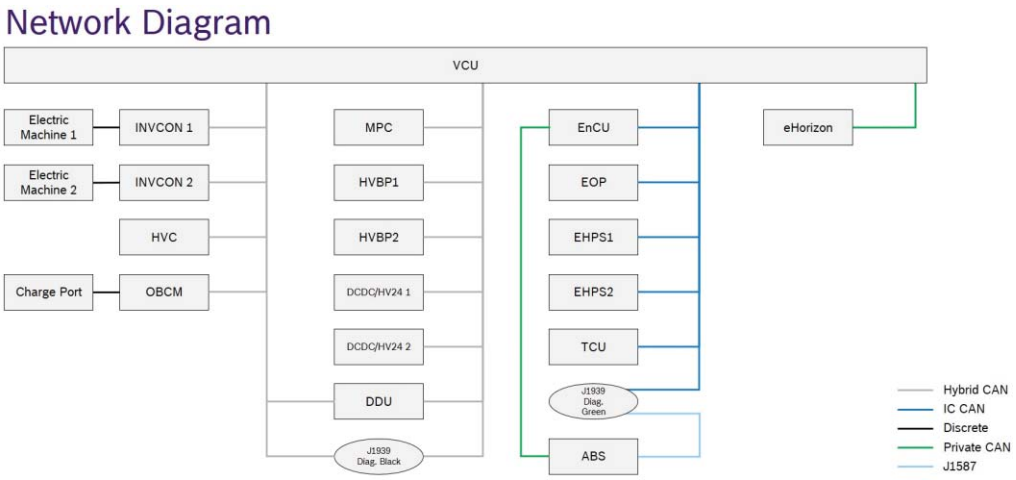

Figure 26: Electrical/ Electronic Architecture System – Network Diagram

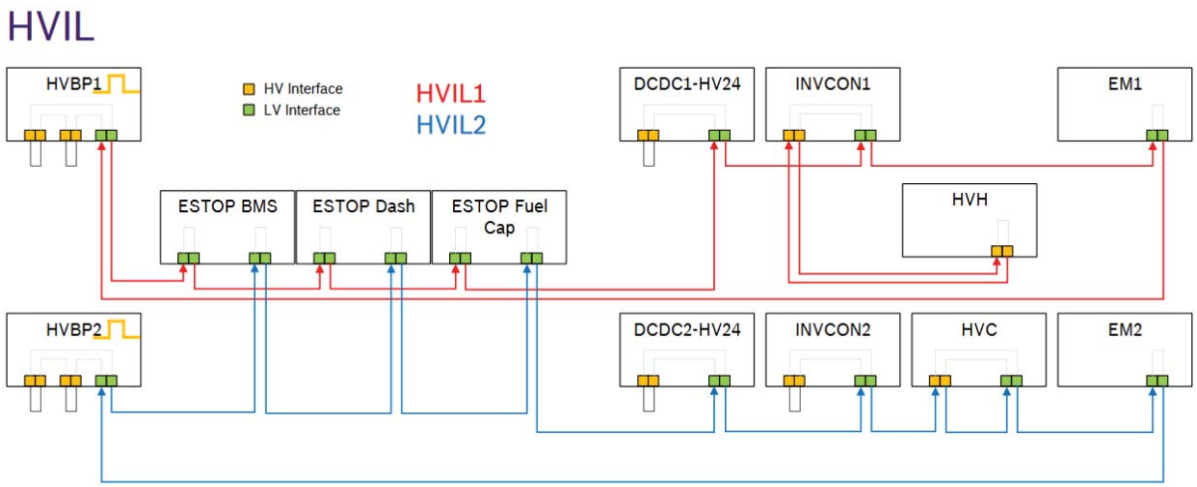

Figure 27: Electrical/ Electronic Architecture System – HVIL Diagram

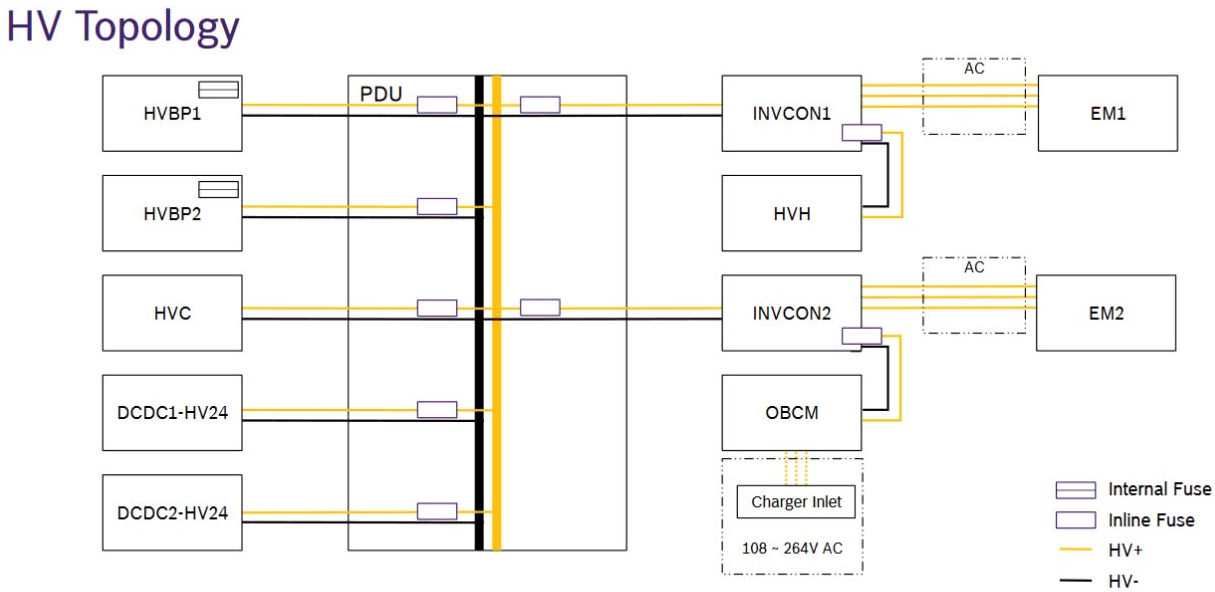

Figure 28: Electrical/ Electronic Architecture System – HV Topology Diagram

A dual 24V power pack system from Dare Auto was installed to support electro-hydraulic power steering and braking with the ICE off. Packaging model of the power steering units shown in figure 29.

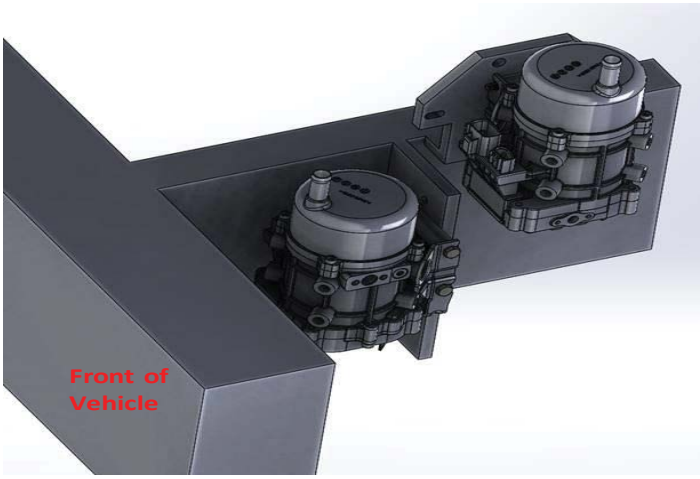

Figure 29 Electro-hydraulic Power Steering (EHPS) Packaging and Bracket Design

Task 9 – Electronic Horizon Controls Integration

Subtask 9.1 – Input Study

At the start of the project, an electronic horizon provider device was acquired that can provide map based data per the ADASIS V2.0 specification. The vehicle control unit can use this information to create a 'horizon' based view of the coming road characteristics that may affect the control of the vehicle. During our software development we implemented the electronic horizon 'reconstructor', an algorithm that takes the ADASIS messages and merges the information into a format that the supervisory and powertrain control algorithms can use to 'look ahead' and make better determinations in terms of the desired mode or trajectory of the state of charge.

The ability to collect electronic horizon data from the vehicle when it is ready is available. This data can be used for future predictive control simulation studies. Additional information such as traffic density and flow are capabilities that will not be included in the vehicle. The focus will be solely on the implementation of electronic horizon as the connected control methodology for the vehicle.

Subtask 9.2 – Interface/Interaction

A control strategy was created that can interface to the vehicle's hybrid drive systems. This controller uses the Electronic Horizon data to refine the strategy in real-time and allow for best utilization of the hybrid drive to allow for best fuel consumption.

Predictive engine start/stop (predictive mode selection) was designed and implemented in Matlab. For a better mode selection decision the algorithm evaluates current and predicted near future states. The evaluation shows drivability improvement in terms of a smaller number of mode switches can be achieved at very marginal sacrifice of efficiency.

The possible interaction of the electronic horizon system with the supervisory control was analyzed in a Matlab simulation study assuming perfect 'look-ahead' information.

An online mode selection and set point optimization (not based on mapped outputs from the dynamic programming study) which can provide an optimized strategy based on the combination of current and 'look-ahead' information was implemented. The simulation study focused on both long-term and short-term optimization (the optimized SOC trajectory and the predictive mode selection) to improve vehicle fuel economy and drivability.

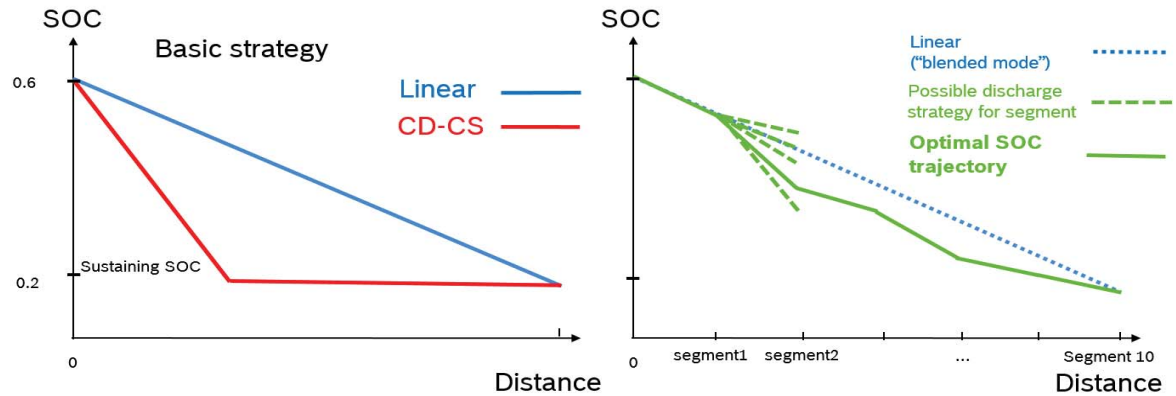

Figure 30: SOC trajectory – Charge depleting strategies

SOC trajectory: A traditional PHEV depletes the battery charge first (charge depleting), then, goes to charge sustaining mode (CD-CS). With the knowledge of the route, a linear discharge over the distance ('blended mode' strategy) can be applied (figure 30). Together with the online mode selection and setpoint optimization a better balance the energy sources over the whole route can be achieved and thus overall fuel consumption reduced (1% to 6% in tested drive cycles).

As a next level, a detailed (optimal) SOC trajectory can be computed based on the planned route. Here a high level Dynamic Programming (DP) approach was applied to find the optimal depletion strategy for each segment of the route. Even with the assumption of perfect prediction data, only a marginal further improvement could be demonstrated in simulation (≤1%). Further, this strategy is not practical for real time application because of the heavy computational effort.

Predictive mode selection, i.e. predictive engine start/stop, was designed and implemented in Matlab. For a better mode selection decision and timing of the mode switch the algorithm evaluates current and predicted near future states. The evaluation shows drivability improvement in terms of a smaller number of mode switches (engine start stops) can be achieved at very marginal sacrifice of efficiency.

Evaluated predictive control utilizing State of Charge (SOC) strategy (trajectory) without observing a significant improvement using a detailed SOC reference over a simplified SOC reference ramp over distance. Commenced predictive engine start/stop evaluation. The interaction of the electronic horizon system with the supervisory control is a topic that will require further development. As a result, full predictive control algorithm will not be implemented in the demonstrator vehicle.

Task 10 – Powertrain and Aftertreatment System Development

Subtask 10.1 – Downsized Engine Calibration

The torque path in the engine controller software was updated and calibrated with a hybrid specific torque structure for the MD delivery truck application utilizing a baseline from the light-duty passenger car segment. Only minor modifications need be introduced into the production engine calibration to accommodate the hybrid powertrain for use in chassis dyno.

Subtask 10.2 – Aftertreatment System Verification

The team concluded that due to influence of the Covid pandemic and related delays, actual results from the demonstrator vehicle could no longer be realized. In its place, a simulation of the potential criteria emissions was executed by modeling the production ATS being used. Following the installation of the exhaust line with aftertreatment components on the powertrain dyno, temperature measurements were collected during running of a City Suburban Heavy Vehicle Cycle (CSHVC) for both a cold and a warm engine. From the temperature measurements collected (figures 31 (cold) and 33 (warm engine), simulation results for both configurations of underfloor SCR and close-coupled SCR are displayed in figures 32 (cold) and 34 (warm engine results). Simulated tailpipe emissions compared favorably with the baseline measurement using the 6.7l engine. The exhaust temperatures did not climb substantially until well into the second half of the 1700-second duration CSHVC cycle. An investigation was conducted to determine if a faster heat-up was possible. The results of the investigation, confirm that the operating points for the MURECP powertrain during the CSHVC are already in an optimal range for fast heat-up with minimum NOx creation.

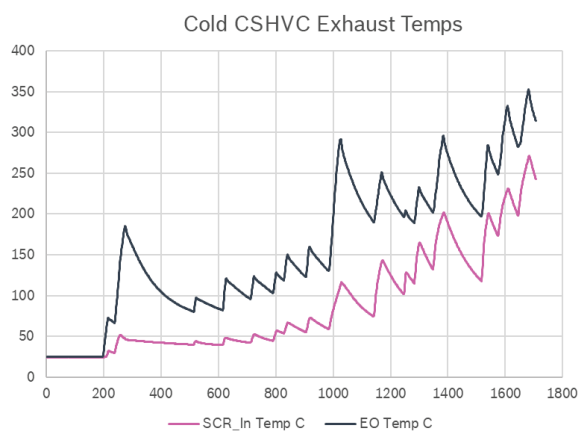

Figure 31. SCR Inlet & Engine Out Temperatures for Cold Engine

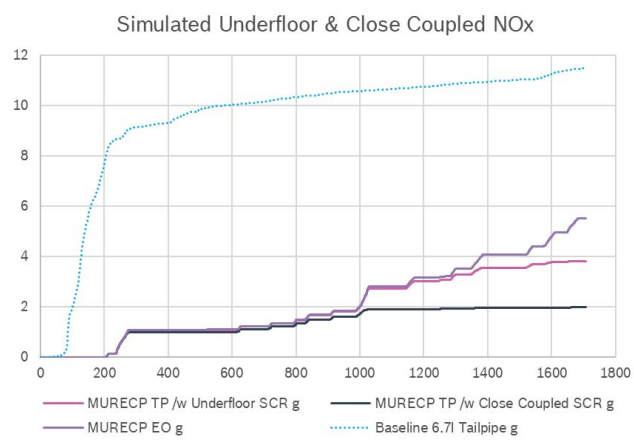

Figure 32. Simulated Underfloor & Close Coupled SCR Results for MURECP Cold Engine compared to baseline measurement

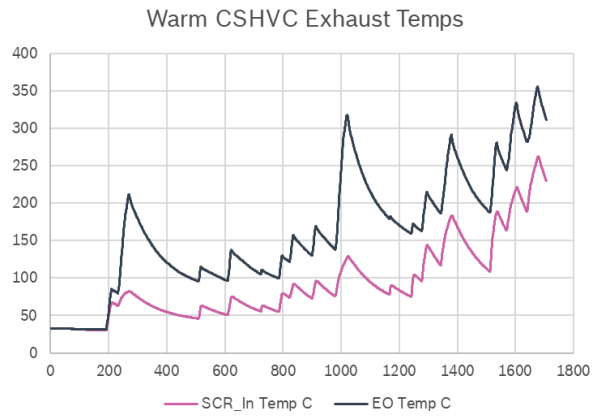

Figure 33. SCR Inlet & Engine Out Temperatures for Warm Engine

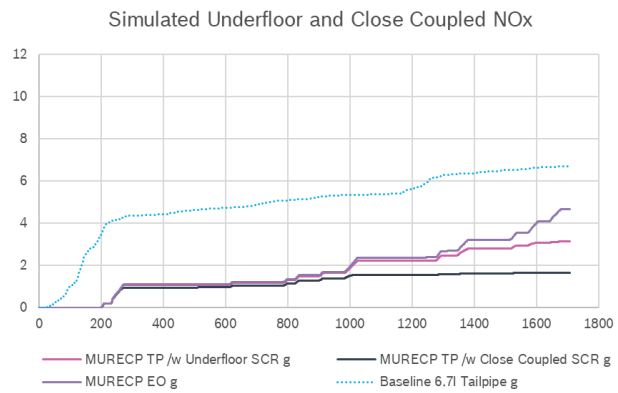

Figure 34. Simulated Underfloor & Close Coupled SCR Results for MURECP Warm Engine compared to baseline measurement

Subtask 10.3 – VCU & ECU Software Implementation

Vehicle and powertrain SW/controls will be run on two different hardware: Vehicle Control Unit (VCU) and Transmission Control Unit (TDG1). VCU is responsible for the torque path calculations, electric drive component interfaces and drivers, operation strategy and mode switch handling. TDG1 will be responsible of actuating transmission solenoids and getting feedback from sensors in the transmission and communicating them to the VCU.

Mode switch functionality was implemented in the VCU software. A mode switch command is determined based on factors such as powertrain efficiency, component limits, and driver demand. Based on the current and target modes, the system will actuate transmission solenoids and powertrain components to reach the target mode and speed / torque setpoint. Abort functions for handling unexpected behavior during mode-switch was developed and implemented.

The ECU torque structure has been updated to work within the hybrid environment. ICE and electric machine torque requests are now being coordinated by the VCU via CAN. This communication has been established and tested on the engine dyno. Successful mode switch testing of all operating modes were completed on the powertrain dyno, including Powersplit with hybrid start. Improvements during mode switch transitions while driver demand varies incorporated into the software by updating the component driving command during clutch engagement. Further, the mode switch torque behavior transient was smoothed as well.

Initial versions of the transmission actuation control strategy and calibrations were implemented in the TDG1. The interfaces for actuating hardware components and communication adapters have been set up. High voltage battery and e-drive components interfaces have been completed, and the high voltage charger communication interface and functionality defined.

Using an early level of software for the powertrain, a series of CSHVC cycles were run modeling various battery charge states. Shown in figures 35-37 are the results indicating the time spent in each mode, the number of switches and the average switch times. As well, the fuel consumption including that of the electrical energy consumed. Here a conversion factor of 244g diesel represents 1 kWh was developed via simulation models. Multiple fuel economy improvements via updated software were also identified -- Internal combustion engine (ICE) operating in Rapid Heat Up mode, further optimization of the ICE torque determination, and improved mode switching characteristics. These were evaluated and improved in future SW builds.

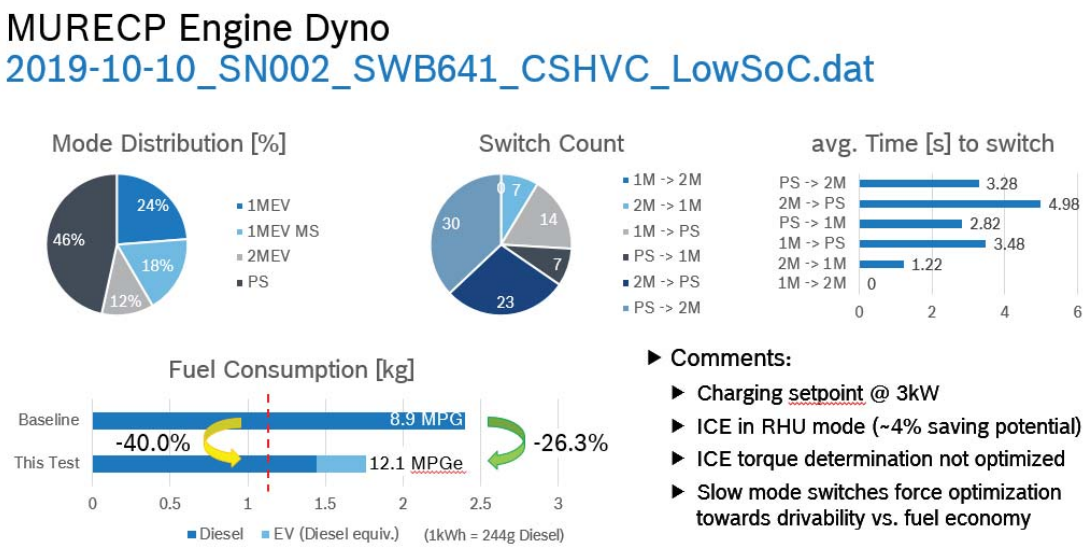

Figure 35: Operation summary during CSHVC with Battery at Low State of Charge

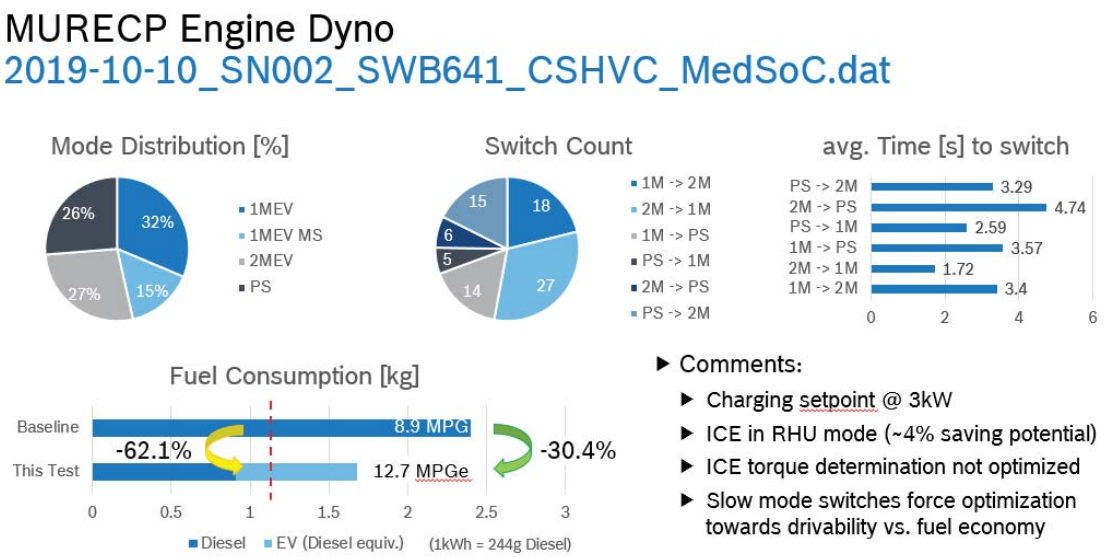

Figure 36: Operation summary during CSHVC with Battery at Medium State of Charge

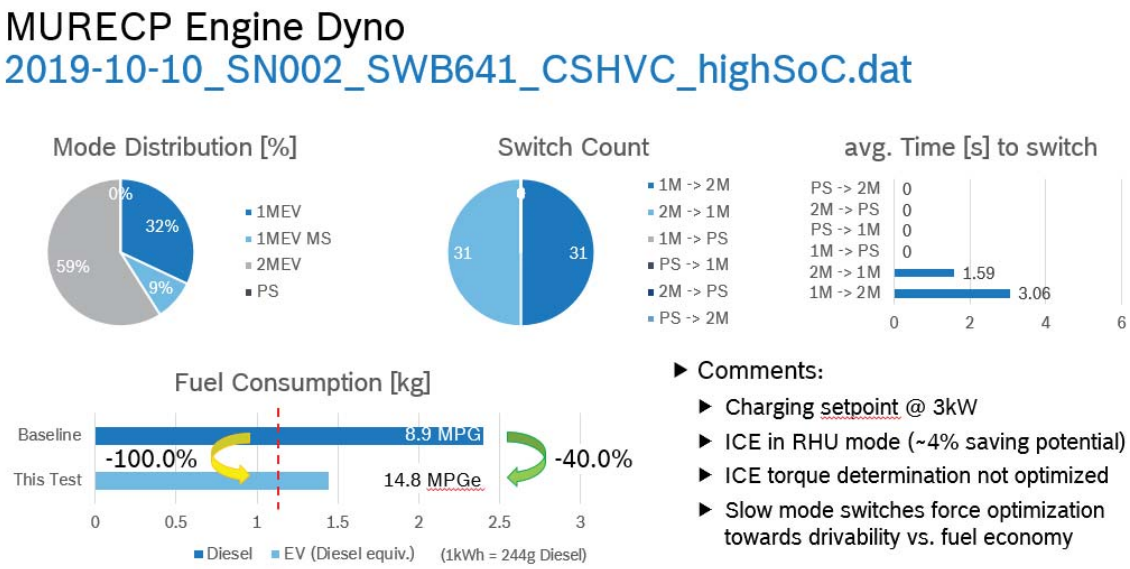

Figure 37. Operation summary during CSHVC with Battery at High State of Charge

On the powertrain dyno, testing of alternative commercial vehicle cycles commenced. Testing of New York City Cycle (NYCC), Urban Dynamometer Driving Schedule (UDDS), Hybrid Truck Users Forum Cl 4 (HTUF4), and Heavy Heavy-Duty Truck (HHDDT) were initiated. Several additional software updates were incorporated allowing the system to operate on various maps as the battery charge state reduced. Shown in figures 38-41 are the results from the alternative cycles mentioned above indicating the time spent in each mode, the number of switches and the average switch times. The nomenclature used in the figures are as follows. 1MEV represents time operating using one electric motor to drive the dyno. 2MEV represents two electric motors and PS represents the Powersplit mode during which both electric motors as well as the internal combustion engine are operating. During mode switches, 1MEV remains connected to the final drive providing torque at all times and is represented by 1MEV MS. Mode switching occurrence is plotted for each of the six changes. In addition, the average time for each of the six changes measured over all the mode switches is plotted. Lastly, the diesel fuel consumption alone (% reduction) and in total including that of the electrical energy consumed (total equivalent fuel % reduction and mass consumed, MPGe) are plotted. Here a conversion factor of 244g Diesel represents 1kWh was developed via simulation models.

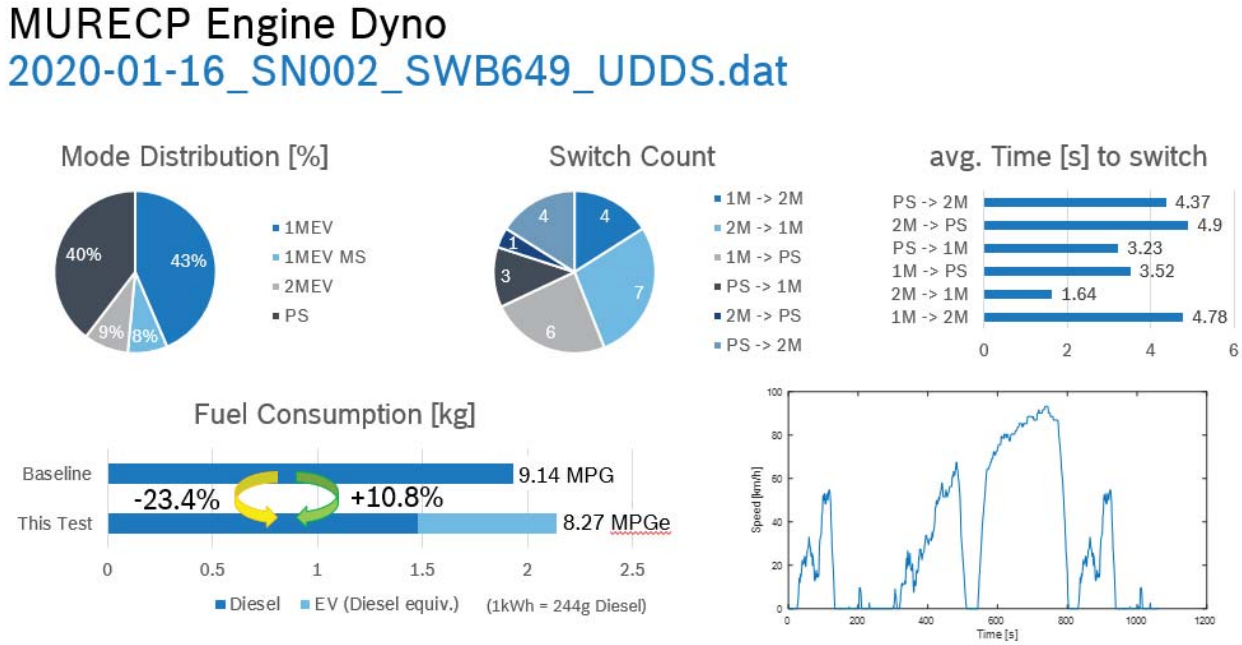

Figure 38: Operation summary during UDDS

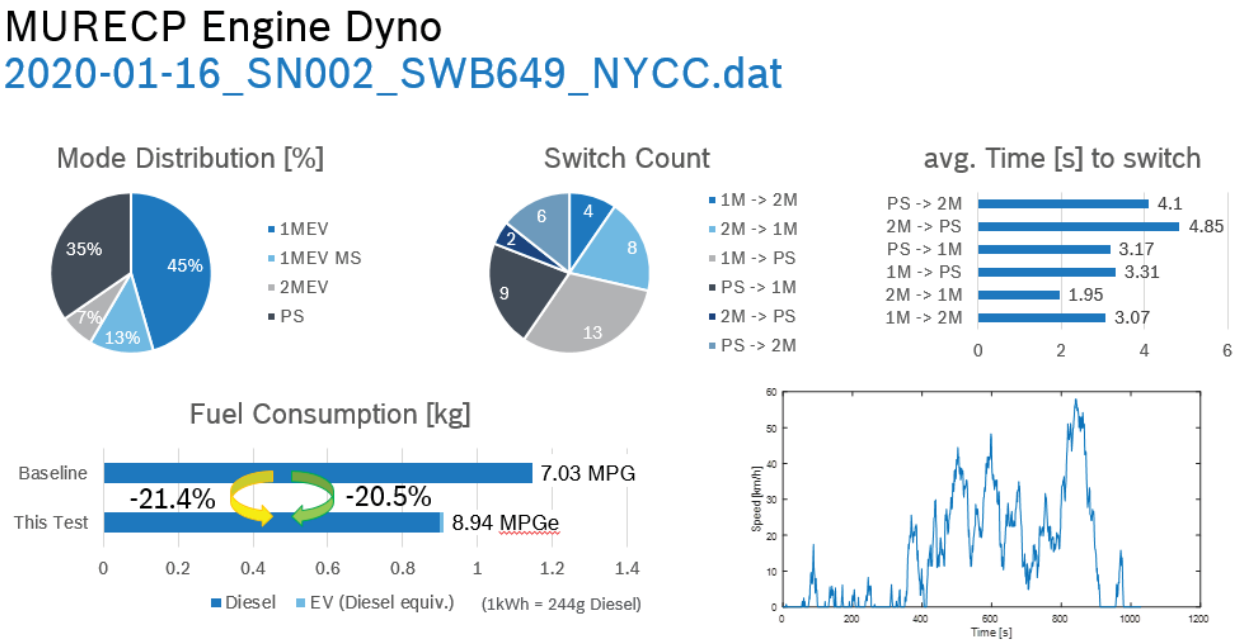

Figure 39: Operation summary during NYCC

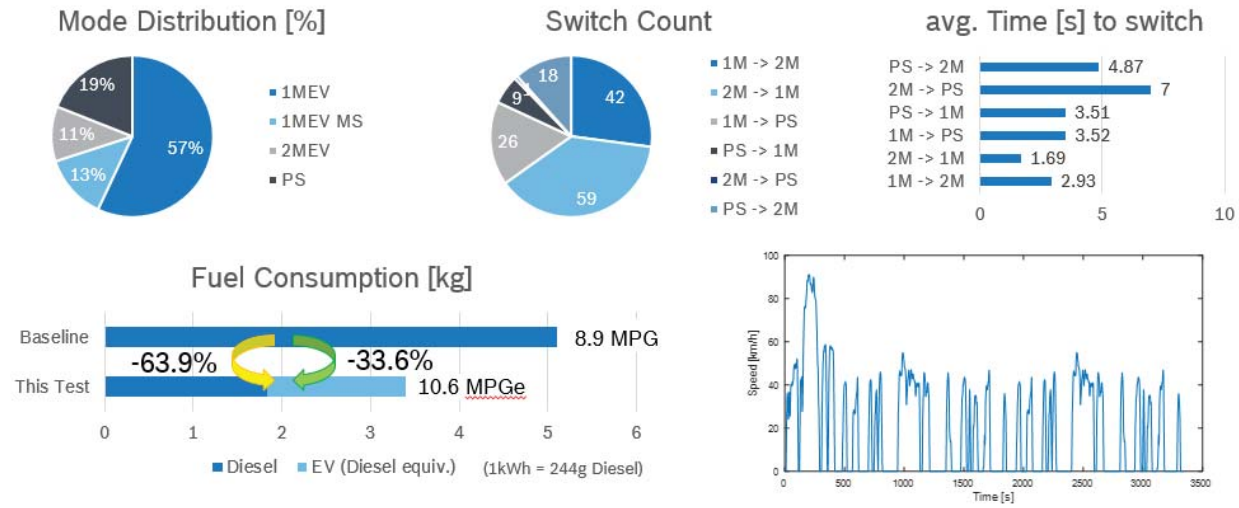

Figure 40: Operation summary during HTUF4

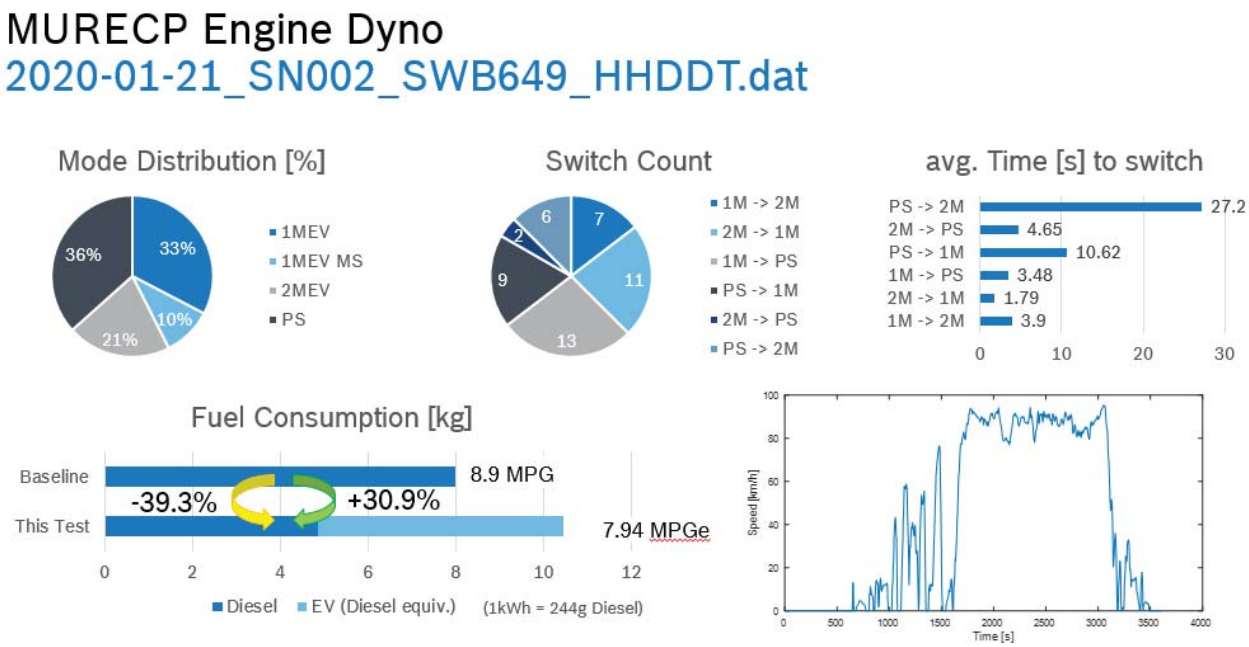

Figure 41. Operation summary during HHDDT

Subtask 10.4 – Integrated Powertrain Calibration Optimization

Initial powertrain transient measurements were performed on the engine dyno under limited test conditions (fixed mode, Powersplit operating mode, with no combustion engine start/stop) due to the calibration maturity. The tests confirmed that the supervisory control algorithms for 1MEV, 2MEV and Powersplit are working as intended and are stable. Even with the stated limitations at this early stage, the fuel consumption in charge-sustaining mode was roughly 30% lower than the baseline powertrain on the CSHVC cycle.

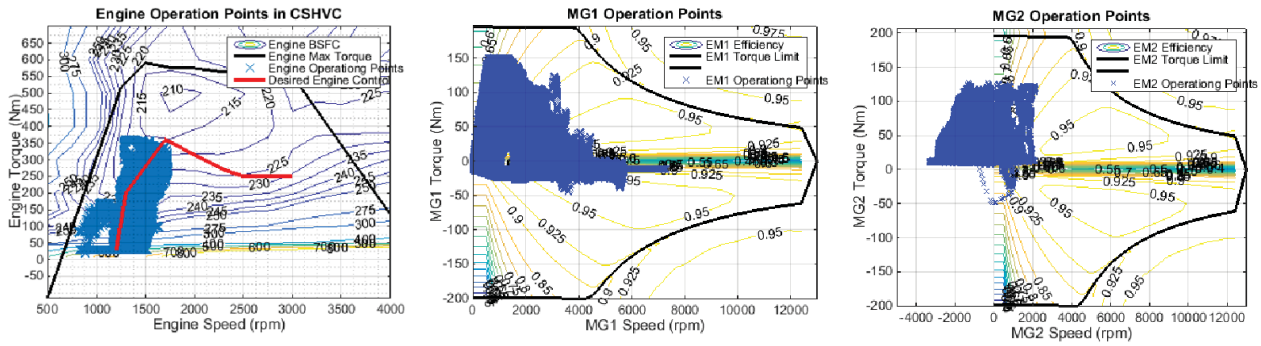

Figure 42: CSHVC Cycle operating points for ICE and Electric Motors 1 & 2

The graph on the left of figure 42 shows the observed engine operating points during the CSHVC cycle in "locked in" Powersplit mode on the engine dyno. The corresponding speed and torque points of the electric machines, MG1 & MG2, are shown on the right. Due to the layout of the dual planetary gear transmission, the engine operating points are not dependent on the current wheel speed or torque request. Instead the VCU will try to follow the engine speed/torque curve in red (left graph above) which is considered to be most fuel efficient while power is requested from the combustion engine. Since the engine has to be torque balanced by electric motor 2 in Powersplit, this operation is considered one of the key achievements within this project. As described earlier, the speed and torque range has been limited for the initial testing. With the limitations in mind, it was expected that the measured fuel economy on those first tests would not meet the simulated fuel economy of a fully functional system.

PHEV transmission clutch calibration was completed on the engine/powertrain dyno. Mode switching was validated transitioning from 1MEV to 2MEV and back. Initial results provide output shaft speed variation of 1% and an output torque variation of 5% during a mode switch and is most likely negligible in terms of drivability and comfort. Switch timing from 1MEV to 2MEV is 3.5 sec while switching back is 1.5 sec. Target of 1.5 sec switch time will be achieved by further optimizing the speed sync PID control, the clutch control (e.g. kiss-point control in preparation of an actuation), and the torque handover.

Based upon initial powertrain transient measurements performed on the engine dyno, updated spin loss calculations were completed with the results shown in figure 43. The revised calculations indicate that while there is no impact at low vehicle speeds (drive-off and curb climb), high-speed EV output torques are reduced while vehicle drag is increased. This results in a maximum 2MEV speed of 111 kph and a 1MEV speed of 87 kph. EV-only range is also reduced by approximately 7 miles.

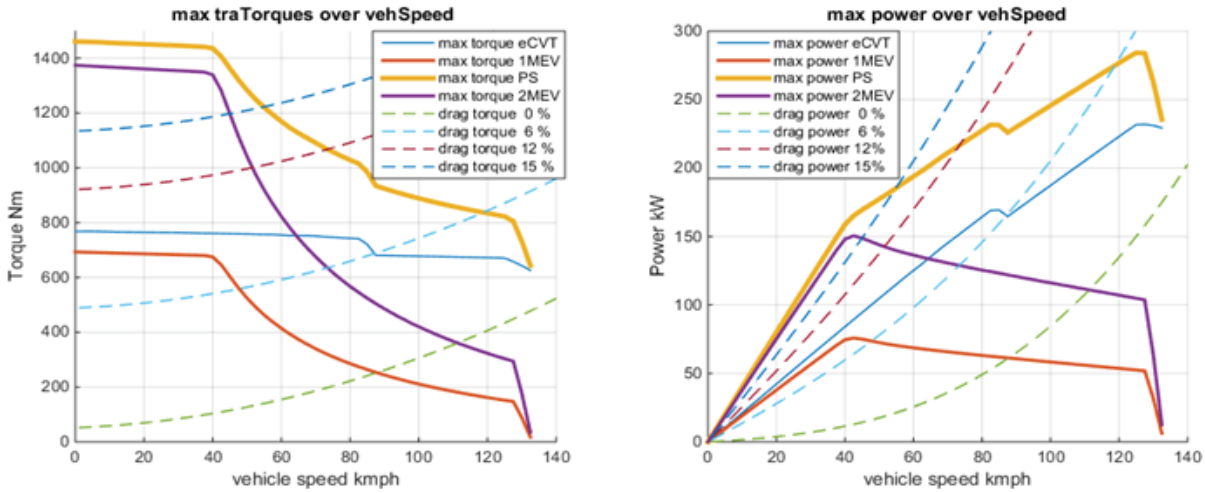

Figure 43: Performance vs. Speed simulation results including transmission spin losses

The computational effort in locating the system optimal engine setpoint was reduced as indicated in figure 44. By searching the map in a coarse grid to identify the first iteration optimal setpoint, then using a finer grid to further optimize in the second iteration, or by searching along a constant power hyperbola in the engine map the efforts to select system optimal engine setpoint are reduced.

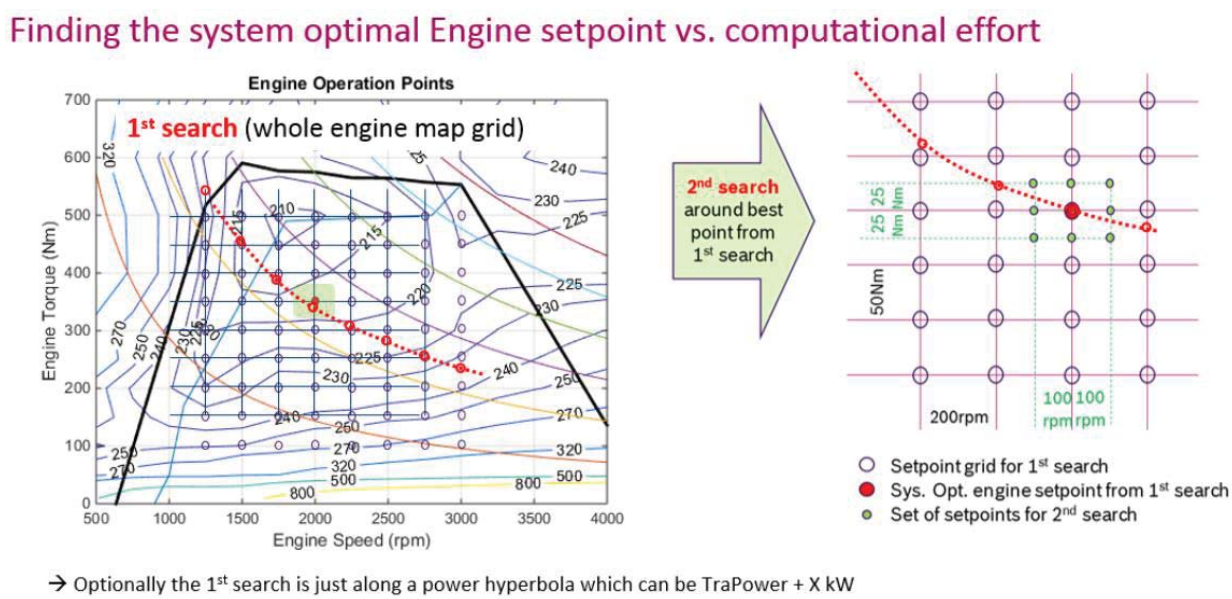

Figure 44: Reducing computational effort in locating system optimal engine set points

Improvements demonstrated on the powertrain dyno transferred to the vehicle via a dataset merge. Minimal additional powertrain calibration efforts were integrated onto the demonstrator vehicle.

Task 11 – Powertrain Integration

Subtask 11.1 – Powertrain Integration Packaging Study

A packaging study was conducted individually on each subsystem first, then for all components (e.g., downsized engine, 2PG transmission, electric motors, battery pack, and additional cooling system). The components were brought together, paying close attention to the various interfaces, to develop the complete vehicle integration solution. Final packaging report provided by Morgan Olson as shown in figure 45.

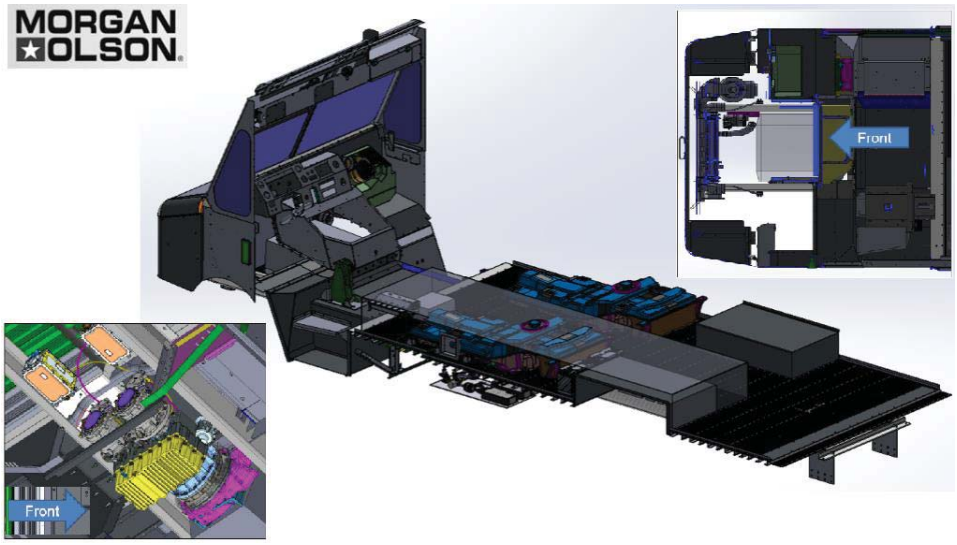

Figure 45. Vehicle Packaging Study Report- Completed by Morgan Olson

Subtask 11.2 – Sub-System Integration

The truck body was separated from the chassis according to work instructions supplied by Morgan Olson. The conventional powertrain and sub-systems were removed from the chassis. Based on the 3D CAD model, the downsized engine coupled with 2PG transmission together with the electric motors installed on chassis. By installing the engine and hybrid transmission previously tested on engine dyno on to the truck chassis, the team was able to ensure a somewhat validated system on the vehicle. Exhaust system and new transmission drive shaft installed on chassis. Electric power steering pumps installed with cooling circuit included. Completed low voltage wire harness routing and termination at the 12V/24V Power Distribution Unit, wire harness functional verification and CAN communication checks with the vehicles controllers (VCU, ECU, TDG1, inverters), fluids box mounting, electrical and hydraulic line termination.

The truck body was then reattached to the chassis, the DEF tank and diesel fuel tank were reinstalled to the chassis. The high voltage power distribution unit was installed (figure 46) in the cargo area following installation of the two high voltage battery packs. The multi-pack coordinator and on-board charger were also installed in the cargo area. The thermal system was filled, commissioned, and initially calibrated for basic testing in the chassis dyno (figure 47). The electric fans are set to operate at 85% of capacity while

the electric motor and high voltage battery cooling pumps operate at 95% capacity. Following the installation of the high voltage components, BOSCH's internal requirement for completing a thorough high voltage safety checklist was completed.

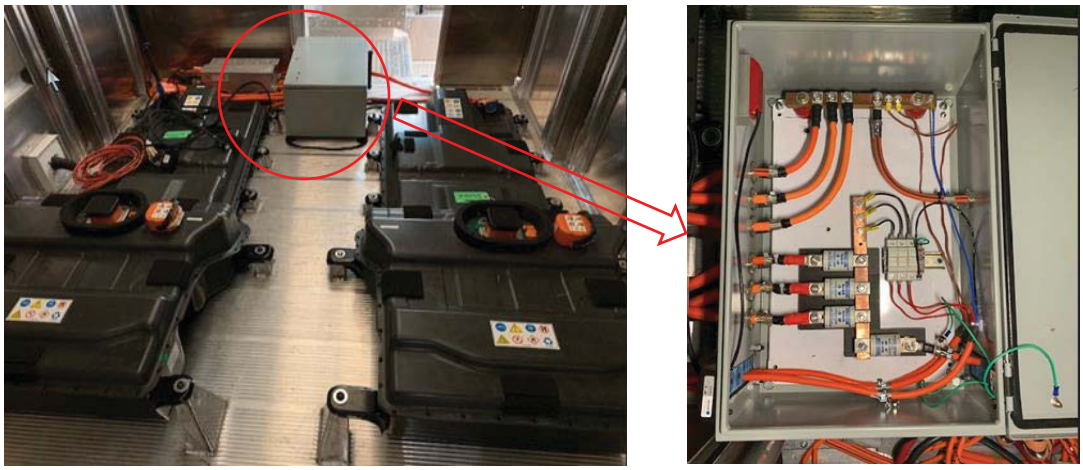

Figure 46: Cargo area looking forward with two High Voltage Battery Pack and High Voltage Power Distribution Unit

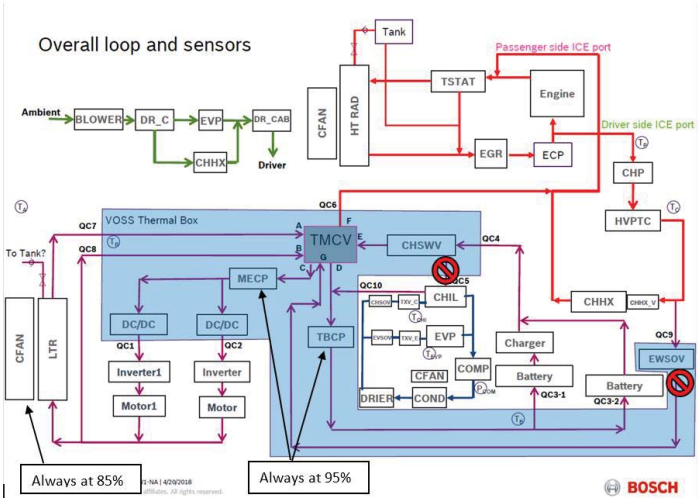

Figure 47: Thermal system configuration for initial chassis dyno testing

Based upon a number of setbacks experienced during the integration phase, the team decided to bypass the Multi-Pack Coordinator (MPC) along with the second High Voltage Battery Pack (HVBP) and the On-Board Charging Module (OBCM). The project moved forward using one HVBP and updated VCU CAN messages sending required communications to the HVBP. Further sub-system integration was not be pursued at this time. The existing condition of the demonstrator vehicle was sufficient to conduct chassis dyno testing for the duration of the project while demonstrating the main project objective.

Task 12 – Calibration and Controls Optimization

Subtask 12.1 – Powertrain On-Road Calibration

Powertrain and vehicle calibration, for the base powertrain and the hybrid system, was functionally demonstrated during this demonstration period, targeting optimum fuel consumption reduction with improved performance. No additional on-road calibration required as vehicle will be operated only in a chassis dyno setting for the duration of this project

Subtask 12.2 – Vehicle Safety and Monitoring Concept Development

Vehicle safety efforts on the assembled vehicle, including BOSCH's internal requirement for completing a thorough high voltage safety checklist, were conducted. This includes high voltage resistance checks and E-stop function verifications. No additional functional and safety monitoring functions need be incorporated for vehicle operation limited to chassis dyno utilizing one battery pack. On-road testing is restricted for the duration of this project.

Task 13 – Fuel Economy Testing

Upon achieving a transient cycle capable demonstrator vehicle, multiple runs of the CSHVC cycle were conducted on the chassis dyno. Starting with a battery pack at maximum charge, cycles were repeated until a charge sustaining result was achieved. Summary results for each of the four runs are shown in figures 48-51 with contents similar to that described in subtask 10.3. The dashed line appearing in the fuel consumption section represents overall project target. In addition, the battery pack state of charge SOC was included. Overall, the four runs demonstrated an average fuel economy improvement of 52%. As the battery pack state of charge is depleted, more operation in the powersplit mode is observed.

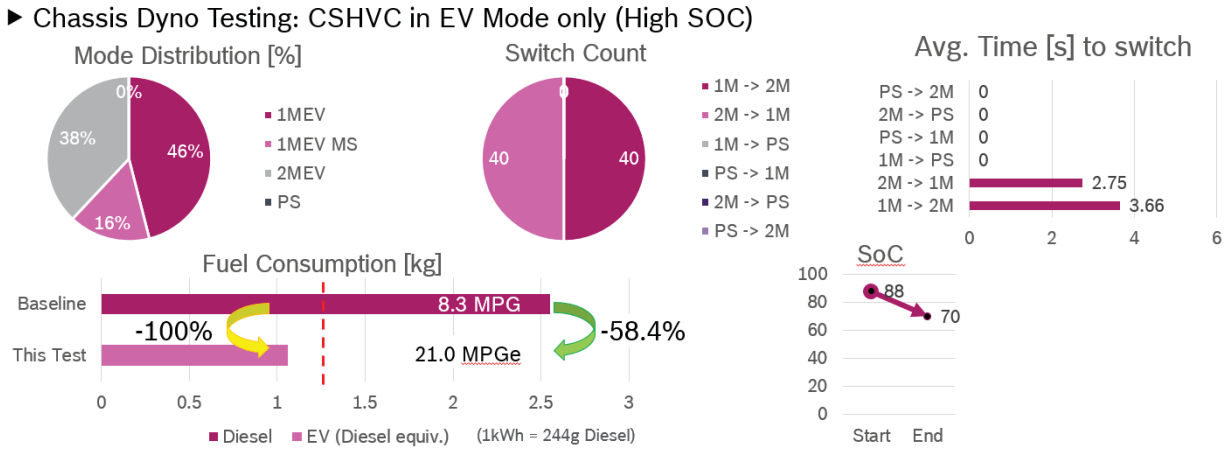

Figure 48: Operation summary during CHSVC starting with full battery charge

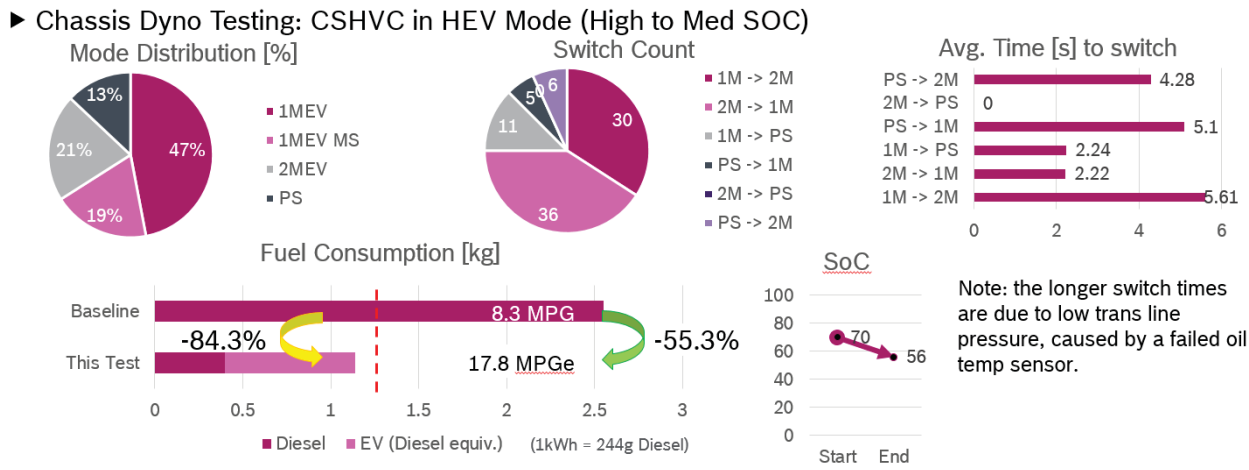

Figure 49: Operation summary during CHSVC with High-Medium battery charge

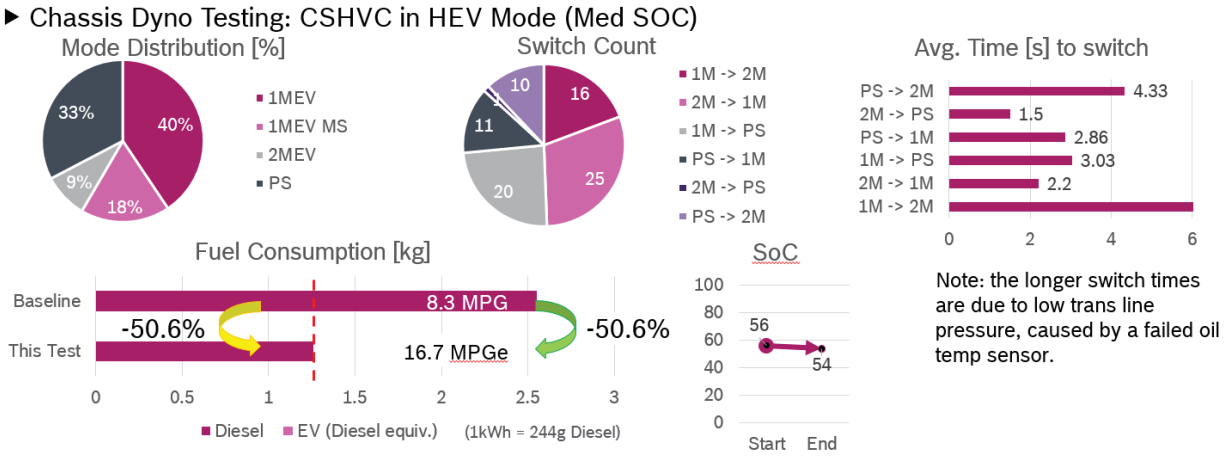

Figure 50: Operation summary during CSHVC with Medium battery charge

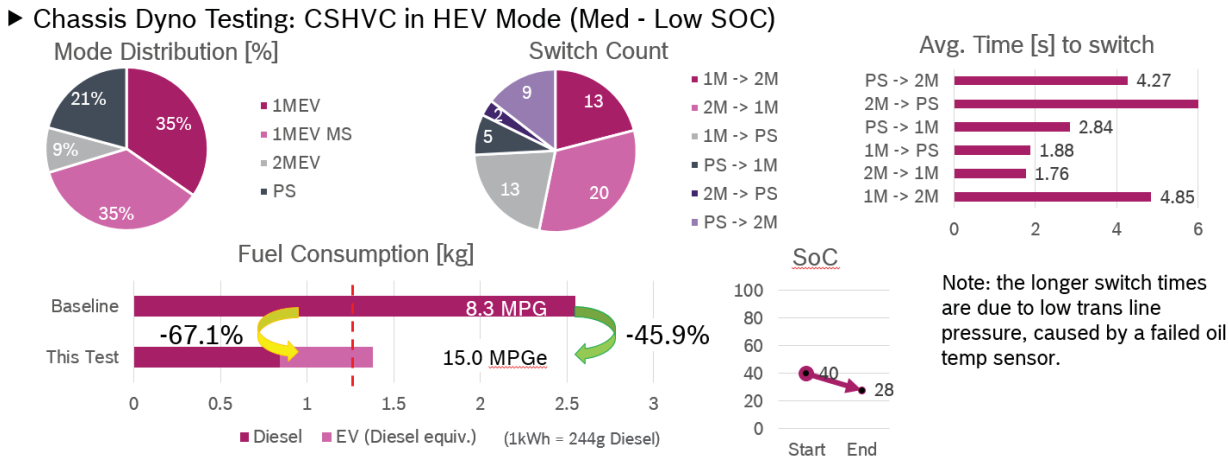

Figure 51. Operation summary during CSHVC with Medium-Low battery charge

Overall Project Summary

At the beginning of this project, Bosch assembled a diverse group of internal organizations throughout the US as well as a rounded group of partners to form the project team. We started the effort by creating simulation models of the powertrain and integrating that into a vehicle model. The sky was the limit in terms of the prototype transmission to be developed and the team generated more than 18 million different design alternatives for initial consideration. Through optimizations on performance characteristics (acceleration, launch on grade, climbing, top speed), fuel economy improvements, in addition to packaging and cost considerations, the final design was selected. The supplier Ricardo manufactured and delivered two prototype transmissions. The first transmission was placed into a Bosch powertrain dyno where initial studies were conducted as the control strategy was developed and implemented. Starting slow with limited operation, the team became familiar with and knowledgeable of the transmission operation. We quickly expanded the range of testing and successfully demonstrated powersplit operation on the new transmission. Upon delivery of the second transmission, the first was swapped into the demonstrator vehicle where at the time, the conversion from a conventional diesel powertrain was ongoing to switch to a PHEV. The second transmission was then placed into the powertrain dyno for continued development activities. Further software improvements developed on the powertrain dyno were transferred to the vehicle to maintain continuity. Following a great deal of effort related to E/E architecture layout/creation, re-packaging vehicle hardware, and development testing setbacks, the demonstrator vehicle was able to propel under its own power. Soon thereafter, the team made substantial progress on achieving the fuel consumption reduction objectives for the project. Using the CSHVC test cycle and repeating several iterations on the Bosch chassis dyno as the battery charge depleted, the target fuel savings were realized including the impact of sustaining battery SOC.

Final Powertrain System Description

Downsized diesel ICE 3.0l V6 569 Nm @ 2000 rpm replacing Cummins 6.7l I6

Demonstrator transmission (see figure 52) configuration consisting of 2 planetary gear sets, 1 clutch, 3 brakes, 2 SMG180 (Gen 1) electric motors and 2 INVCON (Gen 3) with 10,000 rpm_{max}, 200 Nm_{max}, 80 kW_{peak}, total output 1550 Nm_{max}, replacing Allison 1000HS 5 speed

HV battery packs (2) 48 kWh (Fiat 500e)

Base vehicle Class 4 (16,000 lb) package delivery, Freightliner MT45 base chassis

Transmission planetary gear beta ratios: 2.97:1 on PG1 and 2.79:1 on PG2

Final drive ratio 4.78:1 as tested, optimal at 3.91:1

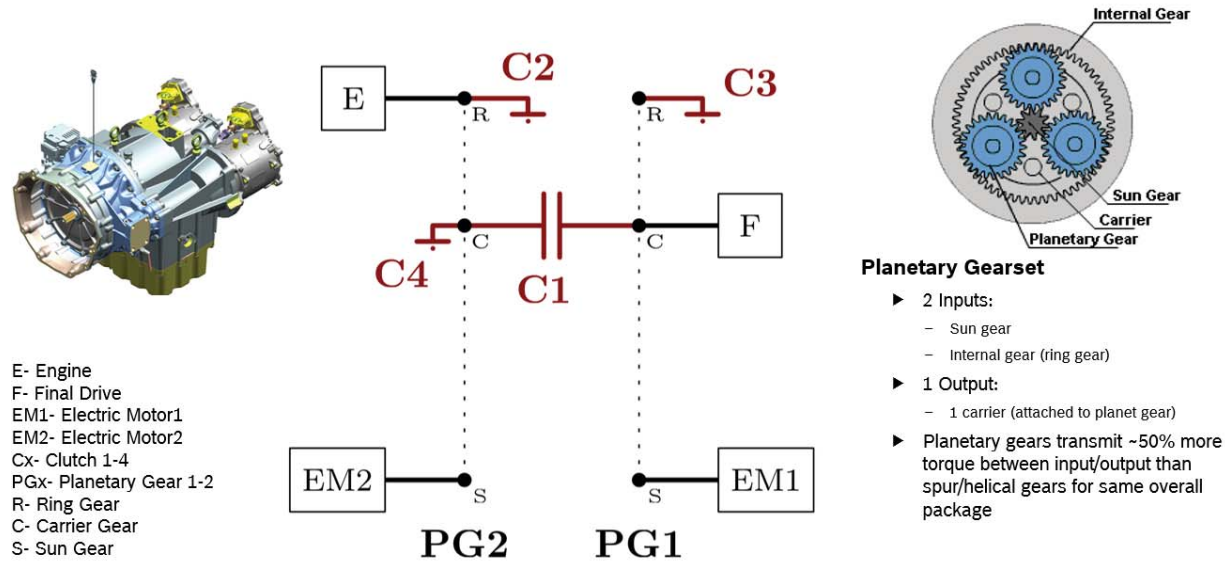

Figure 52. Transmission configuration overview

Key Results Summary

Target >60 miles electric only range; achieved 56 miles with dual HV battery packs calculated via simulation using CSHVC. Dual battery packs were not fully integrated on demonstrator vehicle so confirmation on chassis dyno was not available.

Charge depletion range estimate including the impact of integrating the second HV battery pack is 67 miles using the CSHVC based upon testing in the chassis dyno utilizing one battery pack.

Target top speed 80 mph, achieved 91 mph (via simulation)

Target top speed in EV only mode 75 mph, achieved 71 mpg (via simulation)

Baseline 0-60 mph acceleration time 22 sec, achieved 17 sec (via simulation)

Target 0-15 mph acceleration time 5 sec, achieved 4.7 sec (via simulation)

Figure 53 outlines the potential fuel consumption reductions for numerous technologies available today.

Features	Fuel Consumption % Improvement
Baseline Vehicle	-- (8.9 MPG)
Downsized Engine	22% (DP result)
Parallel HEV w/ downsized engine	39% (DP result)
HEV w/ Dual-Planetary Gear Transmission and 3 Clutches	46-55% (Chassis dyno, 15-18 MPGe)
PHEV w/ Dual-Planetary Gear Trans. and 3 Clutches (EV only)	100% (Chassis dyno, 21 MPGe**) 1.54 miles/kW-hr

*CSHVC = City Suburban Heavy Vehicle Cycle
DP = Dynamic Programming (Matlab)

**6.68 miles on CSHVC
244 g diesel fuel/ kW-hr

Figure 53. Simulated Fuel Consumption Improvement for Various Configurations

PHEV Conversion Process in Pictures

Beginning with the original baseline delivery truck, the conversion from a conventional ICE powertrain into the MURECP PHEV vehicle is presented pictorially in figures 54-61.

Figure 54. Baseline delivery truck as received from Morgan Olson

Figure 55. Truck Cargo Box separated from and lifted above frame according to work instructions from Morgan Olson

Figure 56. Frame with base removed

Figure 57. Downsized engine and prototype powertrain transmission installed

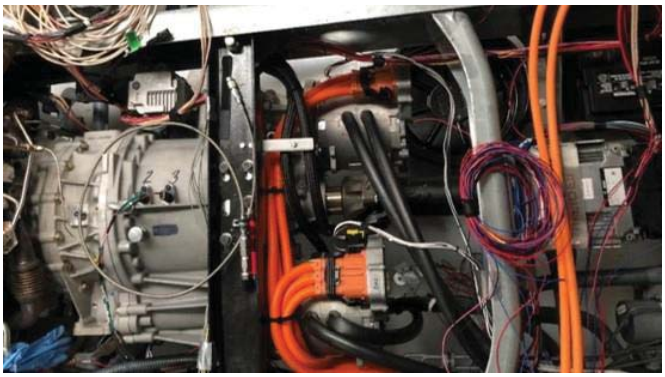

Figure 58. Sideview of prototype transmission (driver side perspective, front of vehicle is to the left)

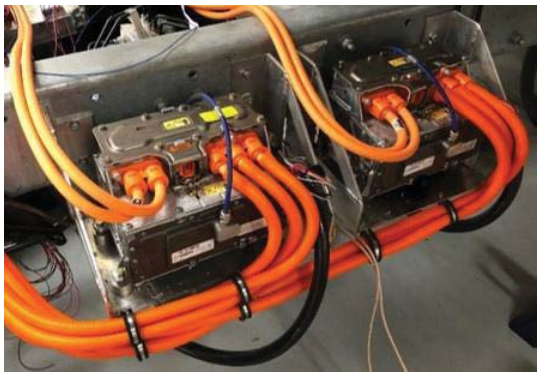

Figure 59. Two Inverter/Converters installed installed along frame rail, driver side

Figure 60. Auxiliary Cooling Fans/ Radiator installed upstream of original fan/radiator.

Figure 61. Body reattached to frame and Power Distribution Unit installed

Collaboration Summary with Other Institutions

Organization	Role	Responsibilities
Robert Bosch LLC	Project Lead	Technical project management, downsized engine calibration Vehicle calibration, monitoring strategy support DPF regen and SCR dosing strategy calibration Engine ECU SW modifications for PHEV Design, manufacturing, and interface support of electric motors and inverters Powertrain and controls simulation and calibration, electronic horizon calibration Battery management system, powertrain architecture optimization, controls R&D
University of Michigan	Partner	Powertrain architecture optimization, controls R&D
Morgan Olson	Partner	Vehicle integration, vehicle fleet testing, consulting
VOSS Automotive	Partner	Thermal management system design, build, integration
NREL	Partner	Vehicle fuel economy validation, drive-cycle definition, cost-benefit ratio analysis, chassis dynamometer testing, field evaluation
Ricardo	Vendor	Transmission design, manufacturing, and interface support
Freightliner Custom Chassis Corp.	Support	Base chassis information support, including CAD models and wiring diagrams
ZF	Support/ Vendor	Powertrain testing support (conventional PT w/ 8 sp. Auto trans), Torsional Damper Design and Supply
FCA	Support	Engine interface support, wire harness diagrams
Modine	Vendor	LT Radiator/Cooling System Package Design and Supply AC/Coolant Chiller Supplier
Dare Auto, Inc. (Formerly FZB)	Vendor	Electro-Hydraulic Power Steering System Design and Supply
Brusa/ Metric Mind	Vendor	HV/24V DC/DC Converter Supplier
Currentways	Vendor	On-Board Charger Module Supplier
Sanden	Vendor	HV A/C Compressor Supplier
Sensata	Vendor	AC Temperature and Pressure Sensor Supplier Resettable Crash Sensor Supplier
Kostal	Vendor	Electronic Shifter Module and Technical Support

Project Outputs

Subpart A. Publications:

Vehicle Technologies Office (VTO) Annual Merit Review June 2017 presentation
VTO Annual Merit Review June 2018 presentation
SAE World Congress April 2018 oral-only presentation
VTO Annual Merit Review June 2019 presentation
Electric & Hybrid Vehicle Technology Expo September 2019 presentation
VTO Annual Merit Review June 2020 presentation
21st Century Truck Partnership September 2020 presentation

Subpart B. Websites Featuring Project Work or Results:

https://www.trucks.com/2018/05/24/bosch-hybrid-powertrain-trucks-chevy-volt/

Subpart C. Networks/Collaborations Fostered:

Collaboration started with Freightliner Custom Chassis Corp.
Collaboration started with Fiat Chrysler.
New collaborations fostered with ZF regarding torsional damper and FZB for the electro hydraulic power steering.
New collaborations fostered with Fujikoki for AC system shut-off valves and Sensata for AC system pressure/temperature sensors.

Subpart D. Media Reports:

Press release and media articles Bosch Mobility Experience Event in May 2018
Press release and media articles NACV Atlanta October 2019

Subpart E. Technologies/Techniques:

Five new dual planetary gear hybrid transmission architectures were developed

Subpart F. Patent Applications:

U.S. Application No.: 16/140,645; Title: MULTI-MODE POWER SPLIT HYBRID TRANSMISSION WITH TWO PLANETARY GEAR MECHANISMS; Filing Date: September 25, 2018, Inventor: Ziheng Pan et al.; U of M Ref. 7471-02; HDP Ref.: 2115-007471-US; Patent issued Apr 14, 2020.

Subpart G. Licensed Technologies: NA