Lift Assist Concept for EDS

Intelligent Lift Assist Device for Loading the EDS Chamber

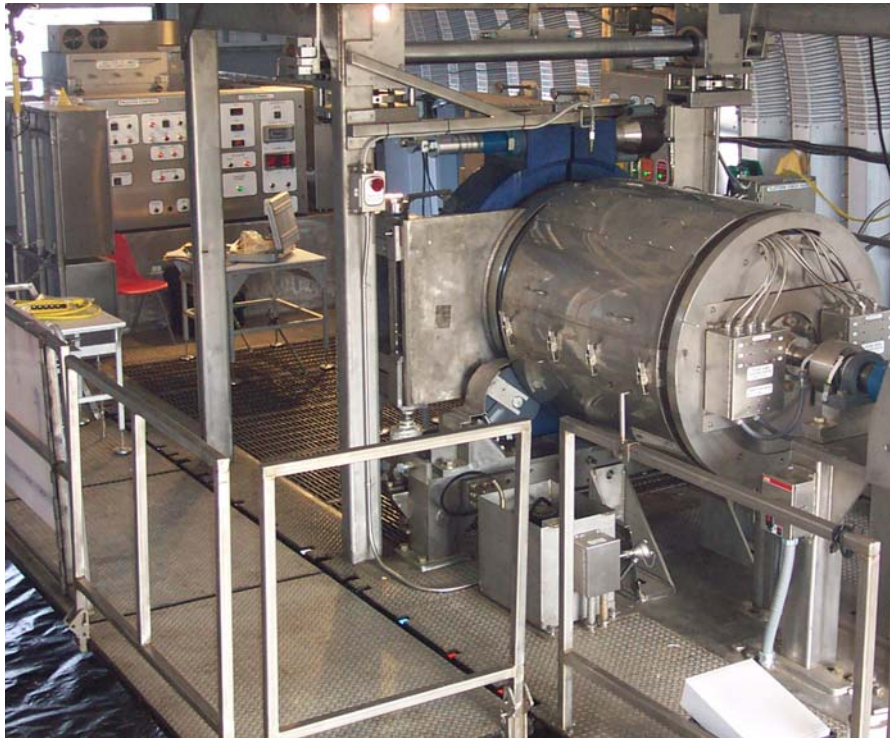

Current EDS Platform

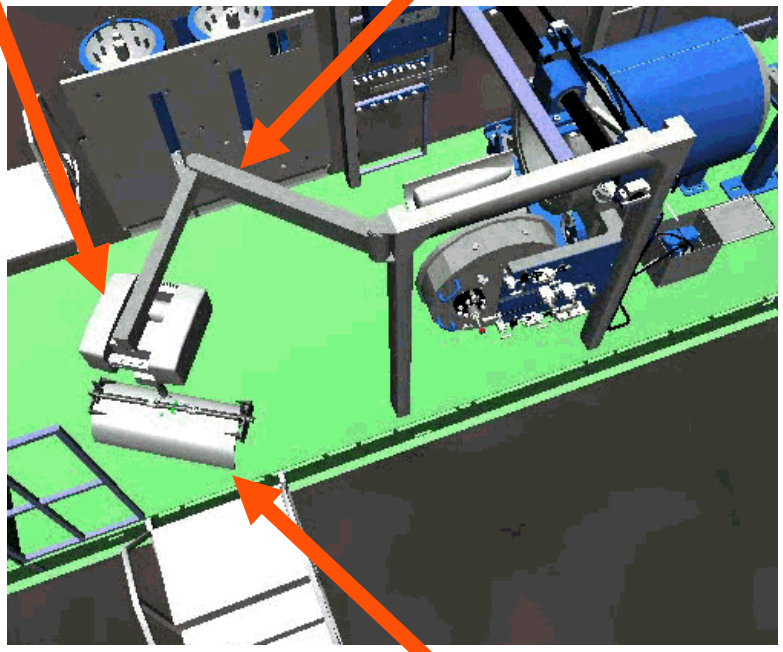

Side Mounted Jib Crane

- Rotary joint in boom
- 8’ reach

(Dimensions not final)

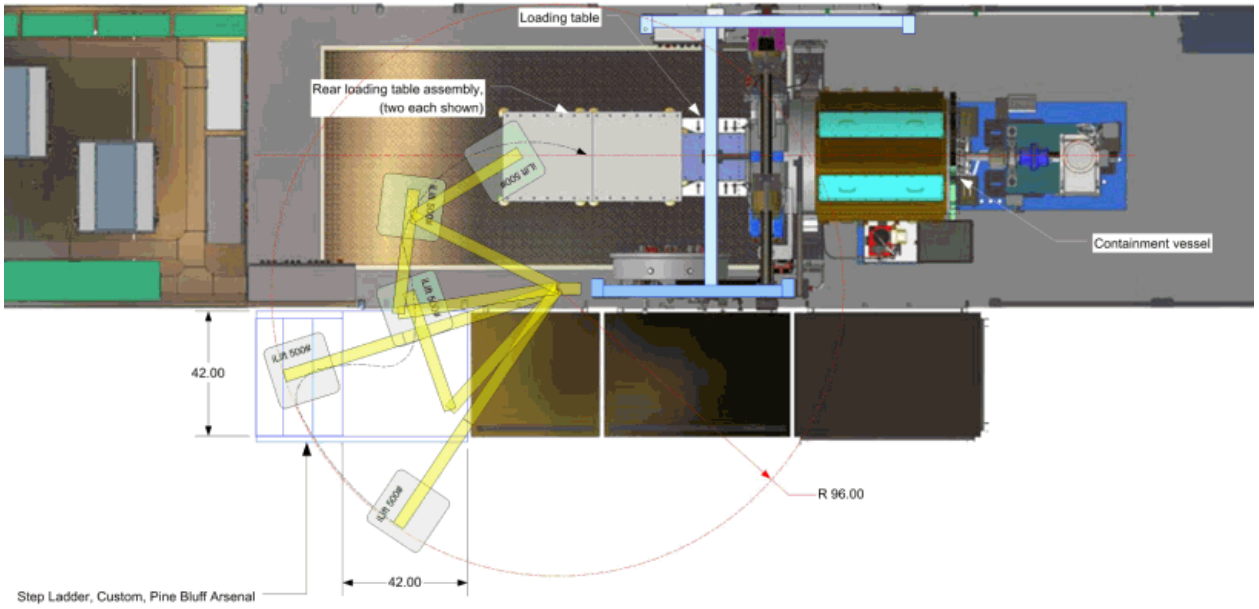

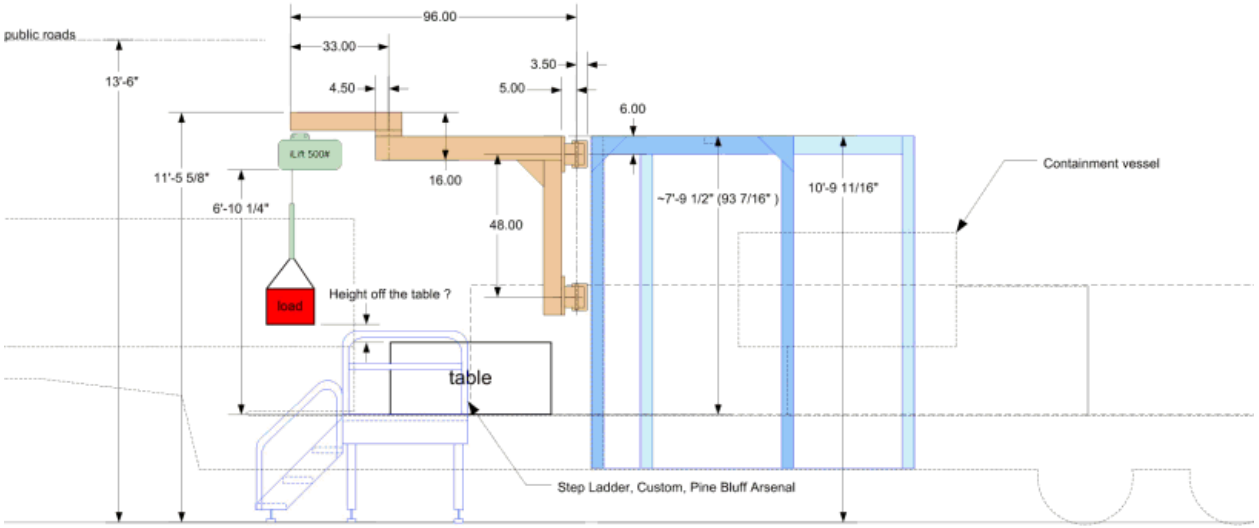

Sandia National Laboratories
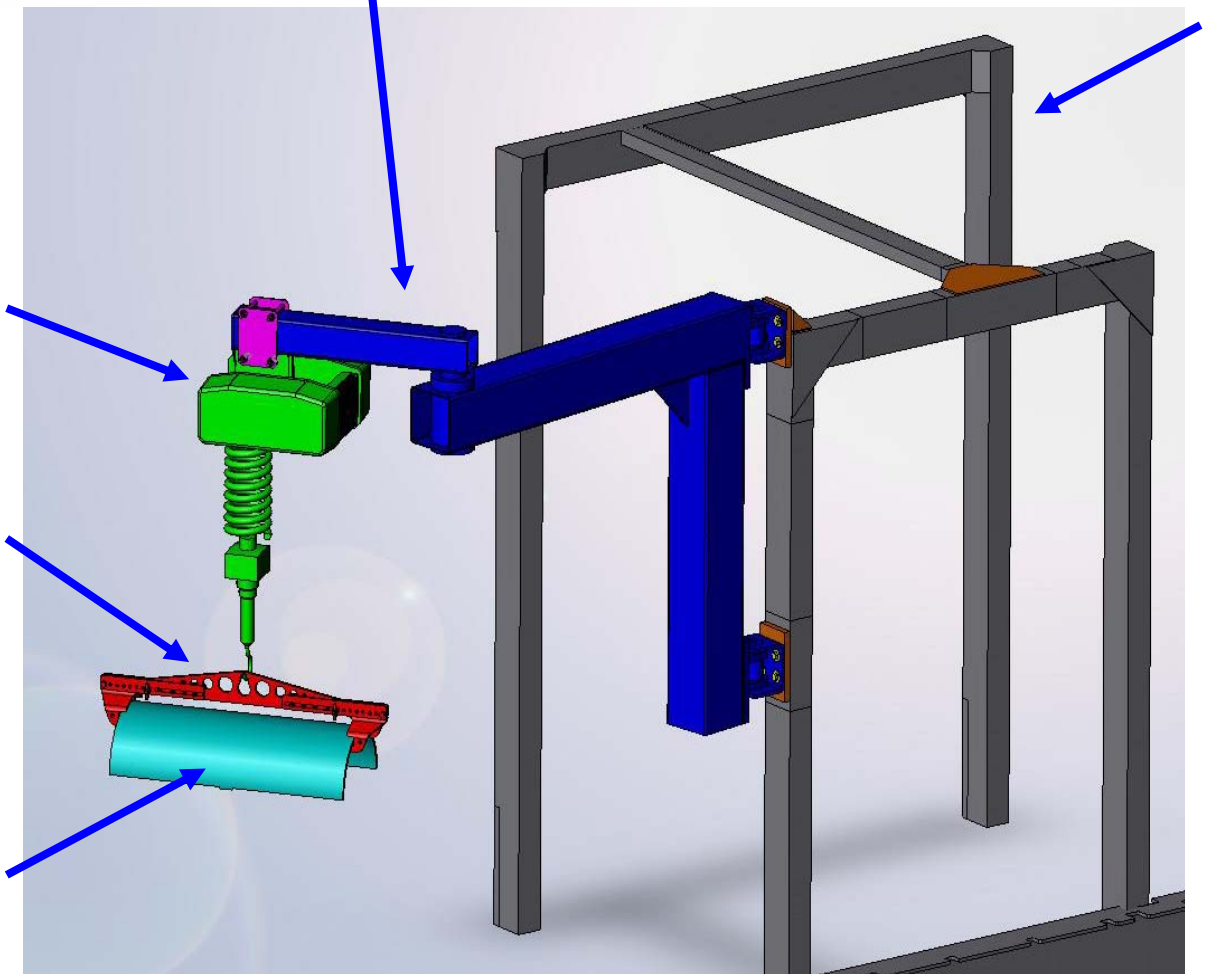
EDS Lift Assist