SAND2013-6964P

Burnup Credit Critical Experiment (BUCCX) Drawings

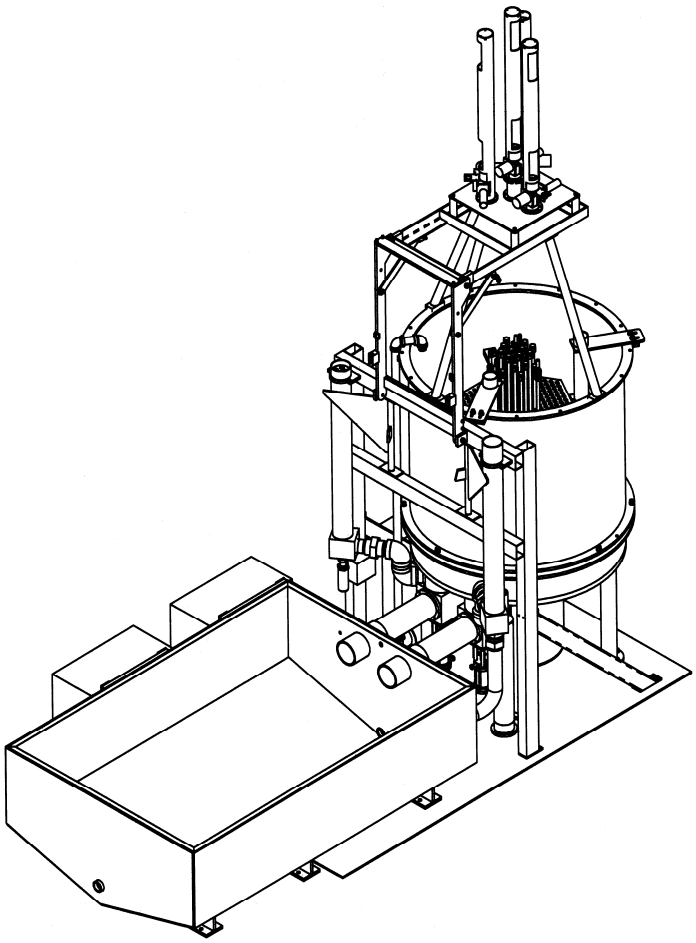

SAND2013-XXXX

Sandia National Laboratories is a multi-program laboratory managed and operated by Sandia Corporation, a wholly owned subsidiary of Lockheed Martin Corporation, for the U.S. Department of Energy's National Nuclear Security Administration under contract DE-AC04-94AL85000.

1. Overall Assembly Drawings

Page	Drawing #	Issue	Title
2			Drawing Index
3	R64918	A	Burnup Credit Experiment Assembly

Burnup Credit Experiments (BUCCX)

2 22 2002

Drawing No.	Revision		Size	Title	No. of Sheets	Quality Level	PEQP Group	Drawing Status	Date	Manufacture	PO or Fab Number
R63000-000	D		D	FUEL ROD, BURNUP CREDIT EXPERIMENT	1	II	3	[redacted]	28-Nov-01	Framatome ANP	Doc. No. 25612
R63001-000	E		D	SPACER, POLYETHYLENE	1	II	3	[redacted]	28-Nov-01	Framatome ANP	Doc. No. 25612
R63002-000	F		D	CLADDING, FUEL ROD, BURNUP CREDIT	1	II	3	[redacted]	7-Jan-02	Framatome ANP	Doc. No. 25612
R63003-000	D		D	PLUG, UPPER	1	II	3	[redacted]	28-Nov-01	Framatome ANP	Doc. No. 25612
R63004-000	B		D	PLUG, BOTTOM	1	[illegible]	[illegible]	REL PRINT	17-May-01	[illegible]	[illegible]
R64900-000	A		D	DETECTOR HOUSING ASSEMBLY	1	II	3	[redacted]	14-Jan-02	Jaguar	ML - 1558
R64901-000	A		D	HYDRO BRAKE ASSEMBLY	1	II	3	[redacted]	16-Jan-02	SNL TA-5	
R64902-000	A		D	HYDRO, LOWER SUPPORT, 2.8 PITCH	1	II	3	[redacted]	11-Feb-02	SNL TA-5	
R64903-000	A		D	HYDRO, LOWER SUPPORT, 2.0 PITCH	1	II	3	[redacted]	11-Feb-02	SNL TA-5	
R64904-000	A		D	HYDRO TUBE END CAP LOCKING PIN	1	II	3	[redacted]	11-Feb-02	SNL TA-5	
R64905-000	A		D	DRIVE MOUNTING PLATE SPACER	1	II	3	CHK PRINT	11-Feb-02	SNL TA-5	
R64906-000											
R64907-000	[illegible]		[illegible]	[illegible]	[illegible]	[illegible]	[illegible]	[illegible]	[illegible]	[illegible]	[illegible]
R64908-000	[illegible]		[illegible]	[illegible]	[illegible]	[illegible]	[illegible]	[illegible]	[illegible]	[illegible]	[illegible]
R64909-000	B		D	HYDRO TUBE	1	II	3	[redacted]	5-Feb-02	SNL TA-5	
R64910-000	B		D	HYDRO TUBE END CAP	1	II	3	[redacted]	5-Feb-02	SNL TA-5	
R64911-000	B		D	UPPER DETECTOR TUBE ANCHOR	1	II	3	[redacted]	1-Feb-02	Jaguar	ML - 1558
R64912-000	B		D	DETECTOR TUBE ANCHOR	1	II	3	[redacted]	1-Feb-02	Jaguar	ML - 1558
R64913-000	D		D	SOURCE ROD, BURNUP CREDIT EXPERIMENT	3	II	3	[redacted]	3-Dec-01	Framatome ANP	Doc. No. 25612
R64914-000	B		D	UPPER DETECTOR TUBE CLAMP PLATE	1	II	3	[redacted]	1-Feb-02	Jaguar	ML - 1558
R64915-000	B		D	DETECTOR TUBE ASSEMBLY	1	II	3	[redacted]	1-Feb-02	Jaguar	ML - 1558
R64916-000	B		D	DETECTOR TUBE CLAMP PLATE	1	II	3	[redacted]	1-Feb-02	Jaguar	ML - 1558
R64917-000	B		D	DETECTOR TUBE CLAMP	1	II	3	[redacted]	1-Feb-02	Jaguar	ML - 1558
R64918-000	A		D	BURNUP CREDIT EXPERIMENT ASSEMBLY	3	III	2	CHK PRINT	16-Jan-02	SNL TA-5	
R64919-000	A		D	BASE TANK	4	III	2	[redacted]	21-Mar-01	The Champ	ML - 1191
R64920-000	A		D	TANK	3	III	2	[redacted]	21-Mar-01	The Champ	ML - 1191
R64921-000	A		D	SUPPORT RING, GRID (BUC)	1	III	2	[redacted]	21-Mar-01	The Champ	ML - 1191
R64922-000	A		D	MID SUPPORT BRACE	2	III	2	[redacted]	23-Apr-01	Springs Fabrication	ML - 1179
R64923-000	B		D	LOWER GRID PLATE, 2.8 PITCH (BUC)	1	II	3	[redacted]	6-Feb-02	The Champ	ML - 1191
R64924-000	A		D	UPPER GRID PLATE, 2.8 PITCH (BUC)	2	II	3	[redacted]	18-Sep-01	The Champ	ML - 1191
R64925-000	A		D	DRIVE SUPPORT (BUC)	1	III	2	[redacted]	1-May-01	Springs Fabrication	ML - 1179
R64926-000	B		D	LOWER GRID PLATE, 2.0 PITCH (BUC)	1	II	3	[redacted]	6-Feb-02	The Champ	ML - 1191
R64927-000	A		D	UPPER GRID PLATE, 2.0 PITCH (BUC)	2	II	3	[redacted]	18-Sep-01	The Champ	ML - 1191
R64928-000	B		D	CONTROL ROD DRIVE EXTENSION (BUC)	2	III	2	[redacted]	11-Oct-01	The Champ	ML - 1191
R64929-000	B		D	STANDOFF, (BUC)	1	III	2	[redacted]	28-Jun-01	The Champ	ML - 1191
R64930-000	B		D	CART BASE, TRANSFER PLATE (BUC)	1	III	2	[redacted]	21-Jun-01	Springs Fabrication	ML - 1179
R64931-000	A		D	DRIVE MOUNTING PLATE, 2.0 PITCH, (BUC)	1	III	2	[redacted]	6-Jun-01	Springs Fabrication	ML - 1179
R64932-000	A		D	GUSSET, (BUC)	1	III	2	[redacted]	23-Apr-01	Springs Fabrication	ML - 1179
R64933-000	A		D	DRIVE FRAME, (BUC)	5	III	2	[redacted]	13-Jul-01	Springs Fabrication	ML - 1179
R64934-000	B		D	MAIN FRAME, LOW, (BUC)	4	III	2	[redacted]	26-Jul-01	Springs Fabrication	ML - 1179
R64935-000	A		D	MAIN ARM, (BUC)	1	III	2	[redacted]	19-Apr-01	Springs Fabrication	ML - 1179
R64936-000	A		D	MAIN ARM SPACER, UPPER, (BUC)	1	III	2	[redacted]	23-Apr-01	Springs Fabrication	ML - 1179
R64937-000	A		D	MAIN ARM SPACER, LOWER, (BUC)	1	III	2	[redacted]	7-Mar-01	Springs Fabrication	ML - 1179
R64938-000	A		D	DRIVE MOUNTING PLATE, 2.8 PITCH, (BUC)	1	III	2	[redacted]	6-Jun-01	Springs Fabrication	ML - 1179
R64939-000	A		D	SUPPORT LEG, DRIVE SUPPORT (BUC)	2	III	2	[redacted]	19-Apr-01	Springs Fabrication	ML - 1179
R64940-000	A		D	PIVOT BLOCK, DRIVE SUPPORT, (BUC)	1	III	2	[redacted]	12-Mar-01	Springs Fabrication	ML - 1179
R64941-000	A		D	GUSSET STOP PLATE	1	III	2	[redacted]	14-May-01	Springs Fabrication	ML - 1179
R64942-000	A		D	SUPPORT BLOCK	1	III	2	[redacted]	14-May-01	Springs Fabrication	ML - 1179
R64943-000	A		D	STOP BLOCK	1	III	2	[redacted]	14-Mar-01	Springs Fabrication	ML - 1179
R64944-000											
R64945-000											
R64946-000	F		D	SAFETY FUEL ROD ASSEMBLY	3	II	3	[redacted]	3-Jan-02	Framatome ANP	Doc. No. 25612
R64947-000											
R64948-000	F		D	SLEEVE, B4C ASSEMBLY	2	II	3	[redacted]	5-Feb-02	Framatome ANP	Doc. No. 25612
R64949-000											

Key:	
[illegible]	RED-LINE DRAWING
	QUALITY LEVEL II, PEQP GROUP 3
[redacted]	RELEASED PRINT
	DRAWING/PART NOT INCLUDED IN BUCCX

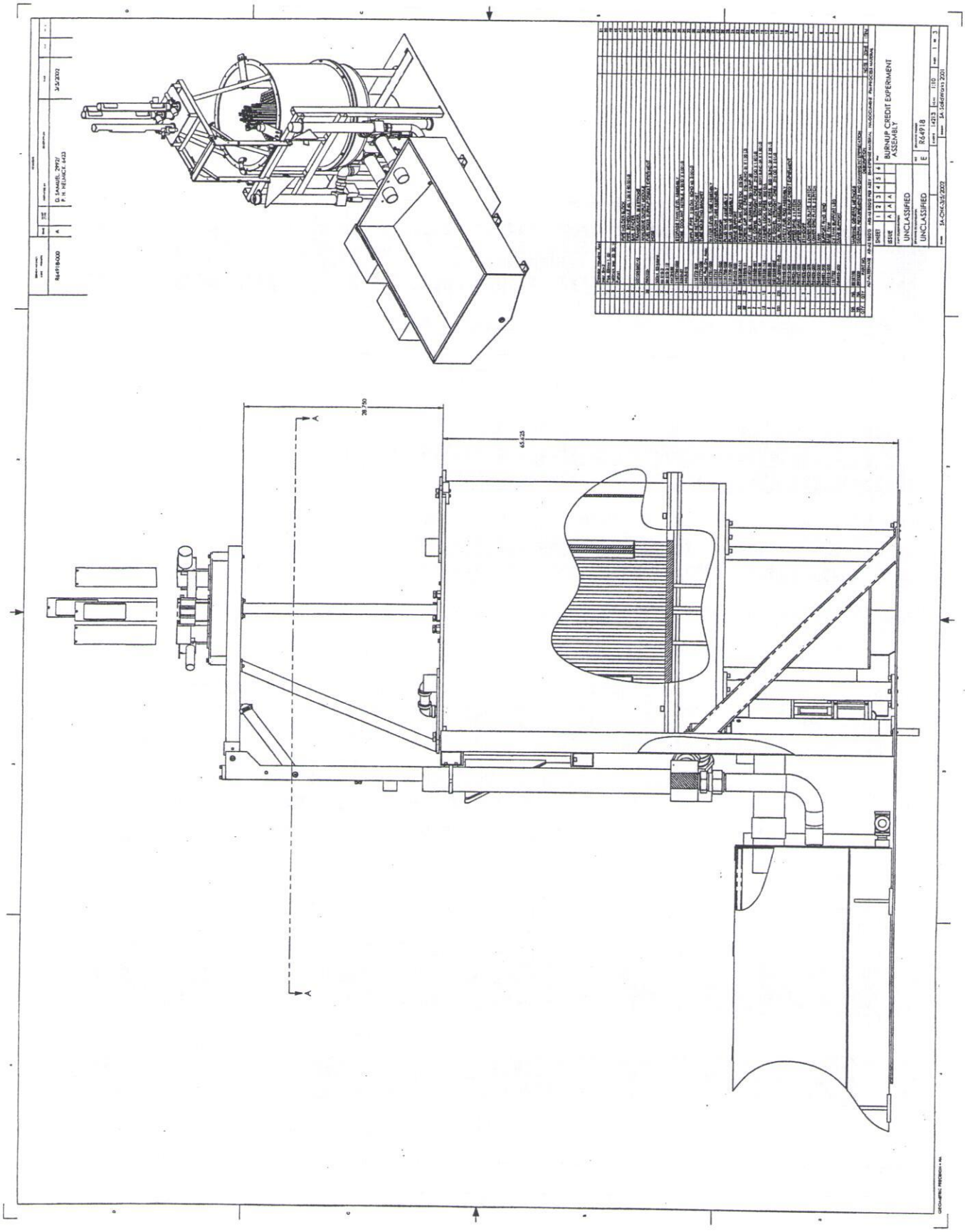
BURNUP CREDIT EXPERIMENT ASSEMBLY
UNCLASSIFIED
UNCLASSIFIED
R64918
SA-CHK-3/5/2002
SA-Solomon 2201
D. SANDIS, 29932/
P. H. HEUNICE 6423
3/5/2002
R64918000
A
28.750
65.25

ROD TABLE

HOLE NO.	2.0 PITCH	2.8 PITCH	HOLE NO.	2.0 PITCH	2.8 PITCH	HOLE NO.	2.0 PITCH	2.8 PITCH	HOLE NO.	2.0 PITCH
1	R63013-000	R63013-000	84	EMF-309251-R-0	EMF-309251-R-0	167	EMF-309251-R-0	EMF-309251-R-0	250	EMF-309251-R-0
2	R63000-300	R63000-300	85	EMF-309251-R-0	EMF-309251-R-0	168	EMF-309251-R-0	EMF-309251-R-0	251	EMF-309251-R-0
3	R63000-200	R63000-200	86	EMF-309251-R-0	EMF-309251-R-0	169	EMF-309251-R-0	EMF-309251-R-0	252	EMF-309251-R-0
4	R63000-300	R63000-300	87	EMF-309251-R-0	EMF-309251-R-0	170	EMF-309251-R-0	EMF-309251-R-0	253	EMF-309251-R-0
5	R63000-200	R63000-200	88	EMF-309251-R-0	EMF-309251-R-0	171	EMF-309251-R-0	EMF-309251-R-0	254	EMF-309251-R-0
6	R63000-300	R63000-300	89	EMF-309251-R-0	EMF-309251-R-0	172	EMF-309251-R-0	EMF-309251-R-0	255	EMF-309251-R-0
7	R63000-200	R63000-200	90	R64946-000	R64946-000	173	EMF-309251-R-0	EMF-309251-R-0	256	EMF-309251-R-0
8	R63000-200	R63000-200	91	EMF-309251-R-0	EMF-309251-R-0	174	EMF-309251-R-0	EMF-309251-R-0	257	EMF-309251-R-0
9	R63000-100	R63000-100	92	EMF-309251-R-0	EMF-309251-R-0	175	EMF-309251-R-0	EMF-309251-R-0	258	EMF-309251-R-0
10	R63000-300	R63000-300	93	EMF-309251-R-0	EMF-309251-R-0	176	EMF-309251-R-0	EMF-309251-R-0	259	EMF-309251-R-0
11	R63000-100	R63000-100	94	EMF-309251-R-0	EMF-309251-R-0	177	EMF-309251-R-0	EMF-309251-R-0	260	EMF-309251-R-0
12	R63000-200	R63000-200	95	EMF-309251-R-0	EMF-309251-R-0	178	EMF-309251-R-0	EMF-309251-R-0	261	EMF-309251-R-0
13	R63000-100	R63000-100	96	EMF-309251-R-0	EMF-309251-R-0	179	EMF-309251-R-0	EMF-309251-R-0	262	EMF-309251-R-0
14	R63000-300	R63000-300	97	EMF-309251-R-0	EMF-309251-R-0	180	EMF-309251-R-0	EMF-309251-R-0	263	EMF-309251-R-0
15	R63000-100	R63000-100	98	EMF-309251-R-0	EMF-309251-R-0	181	EMF-309251-R-0	EMF-309251-R-0	264	EMF-309251-R-0
16	R63000-200	R63000-200	99	EMF-309251-R-0	EMF-309251-R-0	182	EMF-309251-R-0	EMF-309251-R-0	265	EMF-309251-R-0
17	R63000-100	R63000-100	100	EMF-309251-R-0	EMF-309251-R-0	183	EMF-309251-R-0	EMF-309251-R-0	266	EMF-309251-R-0
18	R63000-300	R63000-300	101	EMF-309251-R-0	EMF-309251-R-0	184	EMF-309251-R-0	EMF-309251-R-0	267	EMF-309251-R-0
19	R63000-100	R63000-100	102	EMF-309251-R-0	EMF-309251-R-0	185	EMF-309251-R-0	EMF-309251-R-0	268	EMF-309251-R-0
20	R63000-100	R63000-100	103	EMF-309251-R-0	EMF-309251-R-0	186	EMF-309251-R-0	EMF-309251-R-0	269	EMF-309251-R-0
21	R63000-300	R63000-300	104	EMF-309251-R-0	EMF-309251-R-0	187	EMF-309251-R-0	EMF-309251-R-0	270	EMF-309251-R-0
22	R63000-200	R63000-200	105	EMF-309251-R-0	EMF-309251-R-0	188	EMF-309251-R-0	EMF-309251-R-0	271	EMF-309251-R-0
23	R63000-100	R63000-100	106	EMF-309251-R-0	EMF-309251-R-0	189	EMF-309251-R-0	EMF-309251-R-0	272	EMF-309251-R-0
24	R63000-200	R63000-200	107	EMF-309251-R-0	EMF-309251-R-0	190	EMF-309251-R-0	EMF-309251-R-0	273	EMF-309251-R-0
25	R63000-300	R63000-300	108	EMF-309251-R-0	EMF-309251-R-0	191	EMF-309251-R-0	EMF-309251-R-0	274	EMF-309251-R-0
26	R63000-100	R63000-100	109	EMF-309251-R-0	EMF-309251-R-0	192	EMF-309251-R-0	EMF-309251-R-0	275	EMF-309251-R-0
27	R63000-300	R63000-300	110	EMF-309251-R-0	EMF-309251-R-0	193	EMF-309251-R-0	EMF-309251-R-0	276	EMF-309251-R-0
28	R63000-200	R63000-200	111	EMF-309251-R-0	EMF-309251-R-0	194	EMF-309251-R-0	EMF-309251-R-0	277	EMF-309251-R-0
29	R63000-100	R63000-100	112	EMF-309251-R-0	EMF-309251-R-0	195	EMF-309251-R-0	EMF-309251-R-0	278	EMF-309251-R-0
30	R63000-200	R63000-200	113	EMF-309251-R-0	EMF-309251-R-0	196	EMF-309251-R-0	EMF-309251-R-0	279	EMF-309251-R-0
31	R63000-300	R63000-300	114	EMF-309251-R-0	EMF-309251-R-0	197	EMF-309251-R-0	EMF-309251-R-0	280	EMF-309251-R-0
32	R63000-100	R63000-100	115	EMF-309251-R-0	EMF-309251-R-0	198	EMF-309251-R-0	EMF-309251-R-0	281	EMF-309251-R-0
33	R63000-300	R63000-300	116	EMF-309251-R-0	EMF-309251-R-0	199	EMF-309251-R-0	EMF-309251-R-0	282	EMF-309251-R-0
34	R63000-200	R63000-200	117	EMF-309251-R-0	EMF-309251-R-0	200	EMF-309251-R-0	EMF-309251-R-0	283	EMF-309251-R-0
35	R63000-100	R63000-100	118	EMF-309251-R-0	EMF-309251-R-0	201	EMF-309251-R-0	EMF-309251-R-0	284	EMF-309251-R-0
36	R63000-200	R63000-200	119	EMF-309251-R-0	EMF-309251-R-0	202	EMF-309251-R-0	EMF-309251-R-0	285	EMF-309251-R-0
37	R63000-300	R63000-300	120	EMF-309251-R-0	EMF-309251-R-0	203	EMF-309251-R-0	EMF-309251-R-0	286	EMF-309251-R-0
38	EMF-309251-R-0	EMF-309251-R-0	121	EMF-309251-R-0	EMF-309251-R-0	204	EMF-309251-R-0	EMF-309251-R-0	287	EMF-309251-R-0
39	EMF-309251-R-0	EMF-309251-R-0	122	EMF-309251-R-0	EMF-309251-R-0	205	EMF-309251-R-0	EMF-309251-R-0	288	EMF-309251-R-0
40	EMF-309251-R-0	EMF-309251-R-0	123	EMF-309251-R-0	EMF-309251-R-0	206	EMF-309251-R-0	EMF-309251-R-0	289	EMF-309251-R-0
41	EMF-309251-R-0	EMF-309251-R-0	124	EMF-309251-R-0	EMF-309251-R-0	207	EMF-309251-R-0	EMF-309251-R-0	290	EMF-309251-R-0
42	EMF-309251-R-0	EMF-309251-R-0	125	EMF-309251-R-0	EMF-309251-R-0	208	EMF-309251-R-0	EMF-309251-R-0	291	EMF-309251-R-0
43	EMF-309251-R-0	EMF-309251-R-0	126	EMF-309251-R-0	EMF-309251-R-0	209	EMF-309251-R-0	EMF-309251-R-0	292	EMF-309251-R-0
44	EMF-309251-R-0	EMF-309251-R-0	127	EMF-309251-R-0	EMF-309251-R-0	210	EMF-309251-R-0	EMF-309251-R-0	293	EMF-309251-R-0
45	EMF-309251-R-0	EMF-309251-R-0	128	EMF-309251-R-0	EMF-309251-R-0	211	EMF-309251-R-0	EMF-309251-R-0	294	EMF-309251-R-0
46	EMF-309251-R-0	EMF-309251-R-0	129	EMF-309251-R-0	EMF-309251-R-0	212	EMF-309251-R-0	EMF-309251-R-0	295	EMF-309251-R-0
47	EMF-309251-R-0	EMF-309251-R-0	130	EMF-309251-R-0	EMF-309251-R-0	213	EMF-309251-R-0	EMF-309251-R-0	296	EMF-309251-R-0
48	EMF-309251-R-0	EMF-309251-R-0	131	EMF-309251-R-0	EMF-309251-R-0	214	EMF-309251-R-0	EMF-309251-R-0	297	EMF-309251-R-0
49	EMF-309251-R-0	EMF-309251-R-0	132	EMF-309251-R-0	EMF-309251-R-0	215	EMF-309251-R-0	EMF-309251-R-0	298	EMF-309251-R-0
50	EMF-309251-R-0	EMF-309251-R-0	133	EMF-309251-R-0	EMF-309251-R-0	216	EMF-309251-R-0	EMF-309251-R-0	299	EMF-309251-R-0
51	EMF-309251-R-0	EMF-309251-R-0	134	EMF-309251-R-0	EMF-309251-R-0	217	EMF-309251-R-0	EMF-309251-R-0	300	EMF-309251-R-0
52	EMF-309251-R-0	EMF-309251-R-0	135	EMF-309251-R-0	EMF-309251-R-0	218	EMF-309251-R-0	EMF-309251-R-0	301	EMF-309251-R-0
53	EMF-309251-R-0	EMF-309251-R-0	136	EMF-309251-R-0	EMF-309251-R-0	219	EMF-309251-R-0		302	EMF-309251-R-0
54	EMF-309251-R-0	EMF-309251-R-0	137	EMF-309251-R-0	EMF-309251-R-0	220	EMF-309251-R-0		303	EMF-309251-R-0
55	EMF-309251-R-0	EMF-309251-R-0	138	EMF-309251-R-0	EMF-309251-R-0	221	EMF-309251-R-0		304	EMF-309251-R-0
56	EMF-309251-R-0	EMF-309251-R-0	139	EMF-309251-R-0	EMF-309251-R-0	222	EMF-309251-R-0		305	EMF-309251-R-0
57	EMF-309251-R-0	EMF-309251-R-0	140	EMF-309251-R-0	EMF-309251-R-0	223	EMF-309251-R-0		306	EMF-309251-R-0
58	EMF-309251-R-0	EMF-309251-R-0	141	EMF-309251-R-0	EMF-309251-R-0	224	EMF-309251-R-0		307	EMF-309251-R-0
59	EMF-309251-R-0	EMF-309251-R-0	142	EMF-309251-R-0	EMF-309251-R-0	225	EMF-309251-R-0		308	EMF-309251-R-0
60	EMF-309251-R-0	EMF-309251-R-0	143	EMF-309251-R-0	EMF-309251-R-0	226	EMF-309251-R-0		309	EMF-309251-R-0
61	EMF-309251-R-0	EMF-309251-R-0	144	EMF-309251-R-0	EMF-309251-R-0	227	EMF-309251-R-0		310	EMF-309251-R-0
62	EMF-309251-R-0	EMF-309251-R-0	145	EMF-309251-R-0	EMF-309251-R-0	228	EMF-309251-R-0		311	EMF-309251-R-0
63	EMF-309251-R-0	EMF-309251-R-0	146	EMF-309251-R-0	EMF-309251-R-0	229	EMF-309251-R-0		312	EMF-309251-R-0
64	EMF-309251-R-0	EMF-309251-R-0	147	EMF-309251-R-0	EMF-309251-R-0	230	EMF-309251-R-0		313	EMF-309251-R-0
65	EMF-309251-R-0	EMF-309251-R-0	148	EMF-309251-R-0	EMF-309251-R-0	231	EMF-309251-R-0		314	EMF-309251-R-0
66	EMF-309251-R-0	EMF-309251-R-0	149	EMF-309251-R-0	EMF-309251-R-0	232	EMF-309251-R-0		315	EMF-309251-R-0
67	EMF-309251-R-0	EMF-309251-R-0	150	EMF-309251-R-0	EMF-309251-R-0	233	EMF-309251-R-0		316	EMF-309251-R-0
68	EMF-309251-R-0	EMF-309251-R-0	151	EMF-309251-R-0	EMF-309251-R-0	234	EMF-309251-R-0		317	EMF-309251-R-0
69	EMF-309251-R-0	EMF-309251-R-0	152	EMF-309251-R-0	EMF-309251-R-0	235	EMF-309251-R-0		318	EMF-309251-R-0
70	R64946-000	R64946-000	153	EMF-309251-R-0	EMF-309251-R-0	236	EMF-309251-R-0		319	EMF-309251-R-0
71	EMF-309251-R-0	EMF-309251-R-0	154	EMF-309251-R-0	EMF-309251-R-0	237	EMF-309251-R-0		320	EMF-309251-R-0
72	EMF-309251-R-0	EMF-309251-R-0	155	EMF-309251-R-0	EMF-309251-R-0	238	EMF-309251-R-0		321	EMF-309251-R-0
73	EMF-309251-R-0	EMF-309251-R-0	156	EMF-309251-R-0	EMF-309251-R-0	239	EMF-309251-R-0		322	EMF-309251-R-0
74	EMF-309251-R-0	EMF-309251-R-0	157	EMF-309251-R-0	EMF-309251-R-0	240	EMF-309251-R-0		323	EMF-309251-R-0
75	EMF-309251-R-0	EMF-309251-R-0	158	EMF-309251-R-0	EMF-309251-R-0	241	EMF-309251-R-0		324	EMF-309251-R-0
76	EMF-309251-R-0	EMF-309251-R-0	159	EMF-309251-R-0	EMF-309251-R-0	242	EMF-309251-R-0		325	EMF-309251-R-0
77	EMF-309251-R-0	EMF-309251-R-0	160	EMF-309251-R-0	EMF-309251-R-0	243	EMF-309251-R-0		326	EMF-309251-R-0
78	EMF-309251-R-0	EMF-309251-R-0	161	EMF-309251-R-0	EMF-309251-R-0	244	EMF-309251-R-0		327	EMF-309251-R-0
79	EMF-309251-R-0	EMF-309251-R-0	162	EMF-309251-R-0	EMF-309251-R-0	245	EMF-309251-R-0		328	EMF-309251-R-0
80	R64946-000	R64946-000	163	EMF-309251-R-0	EMF-309251-R-0	246	EMF-309251-R-0		329	EMF-309251-R-0
81	EMF-309251-R-0	EMF-309251-R-0	164	EMF-309251-R-0	EMF-309251-R-0	247	EMF-309251-R-0		330	EMF-309251-R-0
82	EMF-309251-R-0	EMF-309251-R-0	165	EMF-309251-R-0	EMF-309251-R-0	248	EMF-309251-R-0		331	EMF-309251-R-0
83	EMF-309251-R-0	EMF-309251-R-0	166	EMF-309251-R-0	EMF-309251-R-0	249	EMF-309251-R-0		332	EMF-309251-R-0

R64918

UNCLASSIFIED

E | 14213 | 1:10 | A | 2 of 3

SA-CHK-3/5/2002

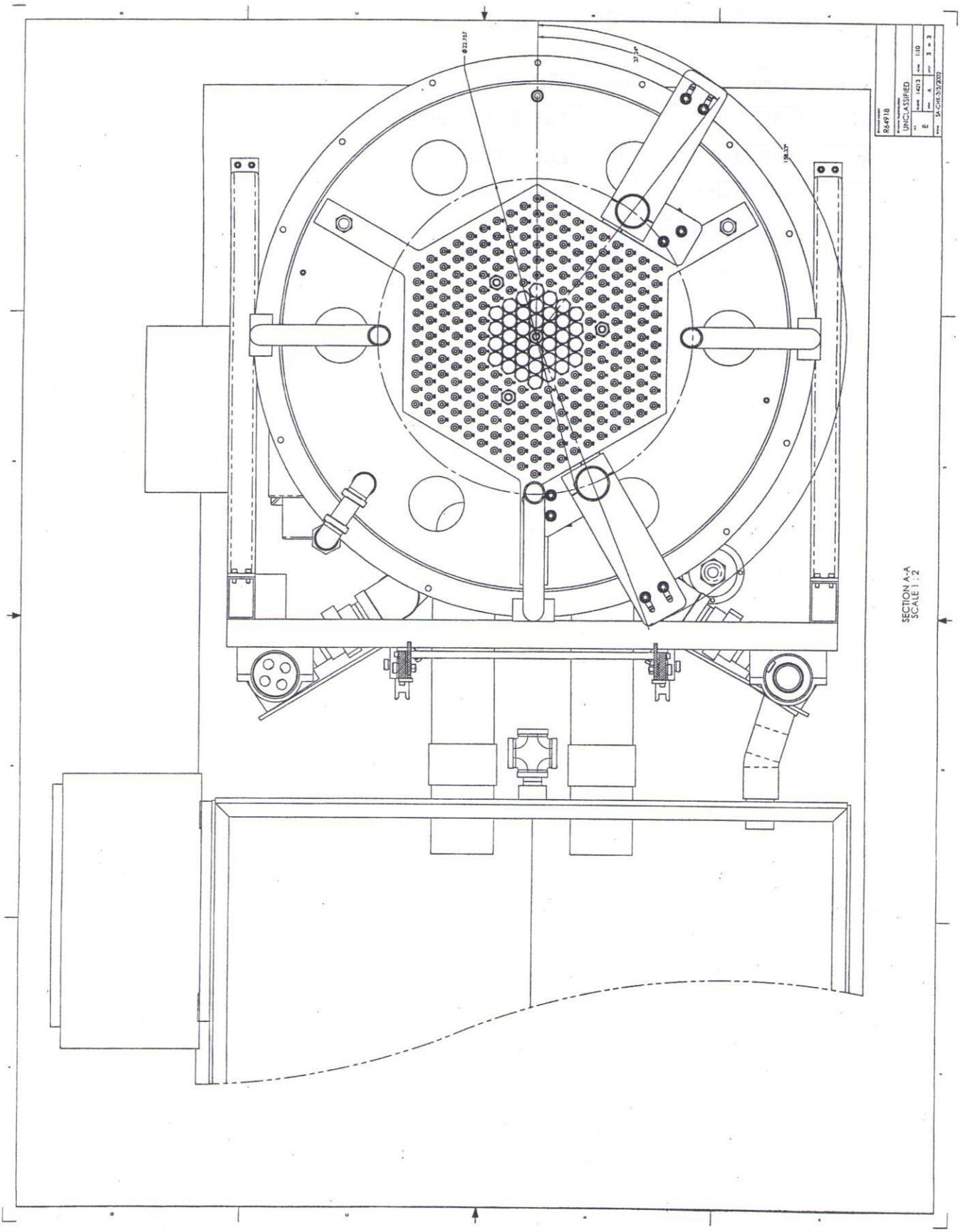
Ø22.757
32.24°
138.35°
R64918
UNCLASSIFIED
1403
1:10
A
3 = 3
SA-CAR-335/2002
SECTION A-A
SCALE 1 : 2

2. Driver Fuel Elements

Page	Drawing #	Issue	Title
7	EMF-309, 251	0	Fuel Rod Assembly
9	EMF-309, 250	0	Lower End Cap
10	EMF-309, 184	0	Upper End Cap
11	EMF-309,185	0	Cladding

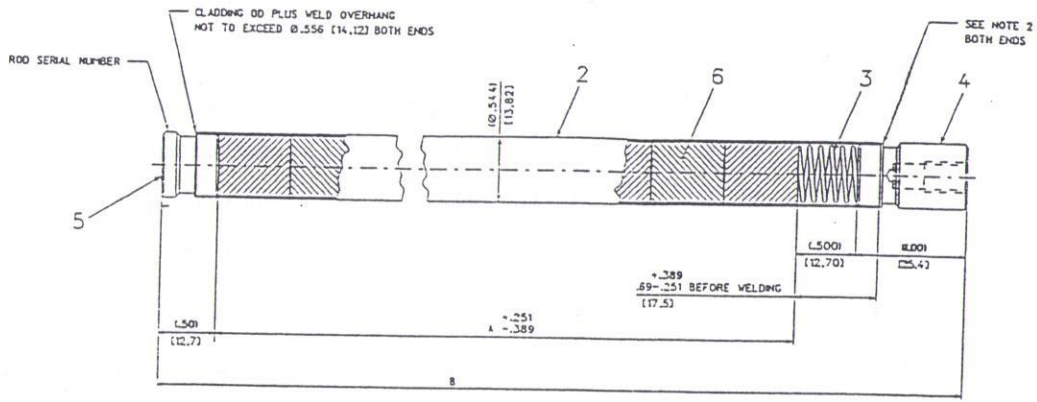

ASSY	DIMENSION A	DIMENSION B
1	19.375 [492.13]	21.375 [542.93]
2	38.750 [984.25]	40.750 [1035.05]

General Notes: UNLESS OTHERWISE SPECIFIED

1. DIMENSIONING AND TOLERANCING PER ISO 1101. ALL DIMENSIONS ARE IN INCHES.
2. MINIMUM END CAP WELD COVER SHALL BE .011 [0.28].
3. ROD SHALL BE PRESSURIZED IN A He ATMOSPHERE TO 0-40 PSIG [0-276 KPa GAGE].
4. NUMBERS SHOWN IN SQUARE BRACKETS ARE MILLIMETERS. TO BE USED FOR REFERENCE ONLY.

COMMENT ONLY
NOT RELEASED FOR FABRICATION

DRAWN BY/DATE	CHECKED BY/DATE
DLF 8-18-95	
DLF 8-24-95	
SAM 1-24-96	RLF 1-25-96
SAM 1-25-96	RLF 1-25-96
SAM 1-30-96	RLF 1-30-96
SAM 1-30-96	2-1-96

Siemens Power Corporation - ND
Advanced Nuclear Fuels Corporation

SCALE: 2:1

FUEL ROD ASSEME

EMF-309,251 R-0

VIEW ORIENTATION
3RD ANGLE PROJECTION

SIEMENS POWER CORPORATION
CUSTOMER PARTS LIST

EFFECTIVITY DATE: 02/05/96 TO 04/30/96

EMF - SPA-069,REV.0
ISSUE DATE:

0PROJECT- BATTELLE SPECIALTY RODS
CODE- P06338
NO ASSEMBLIES- 613
NOM ENRICHMENT-4.31% U235
CHARACTERISTICS SPECIFICATION- EMF -

LEVEL	PART DESCRIPTION	FIND NO.	PART NO.	NO.PER ASSM	UM	DRAWNG OP	REV(S)	PRODUCT SPECS	MATERIAL SPECS	
1	ROD ASSEMBLY	000	143716	350	EA	309251-01	00	SPA-069		
2	CLADDING	002	143717	1	EA	309185-01	00	SPA-069	35021-08	35021-09
2	SPRING #W-64 (SST) CENTURY SPRING COMPANY	003	143718	1	EA					
2	UPPER END CAP	004	143714	1	EA	309184-01	00	SPA-069	35007-07	
2	LOWER END CAP	005	143715	1	EA	309250-01	00	SPA-069	35007-07	
2	BATTELLE PELLETS - 4.31% .498 DIA X .625 LG	006	143719	203	KG			SPA-069		
1	ROD ASSEMBLY	000	144229	263	EA	309251-02	00	SPA-069		
2	CLADDING	002	144230	1	EA	309185-02	00	SPA-069	35021-08	35021-09
2	SPRING #W-64 (SST) CENTURY SPRING COMPANY	003	143718	1	EA					
2	UPPER END CAP	004	143714	1	EA	309184-01	00	SPA-069	35007-07	
2	LOWER END CAP	005	143715	1	EA	309250-01	00	SPA-069	35007-07	
2	BATTELLE PELLETS - 4.31% .498 DIA X .625 LG	006	143719	305	KG			SPA-069		

This document contains Siemens Power Corporation proprietary information and is subject to the restrictions on the first or title page.

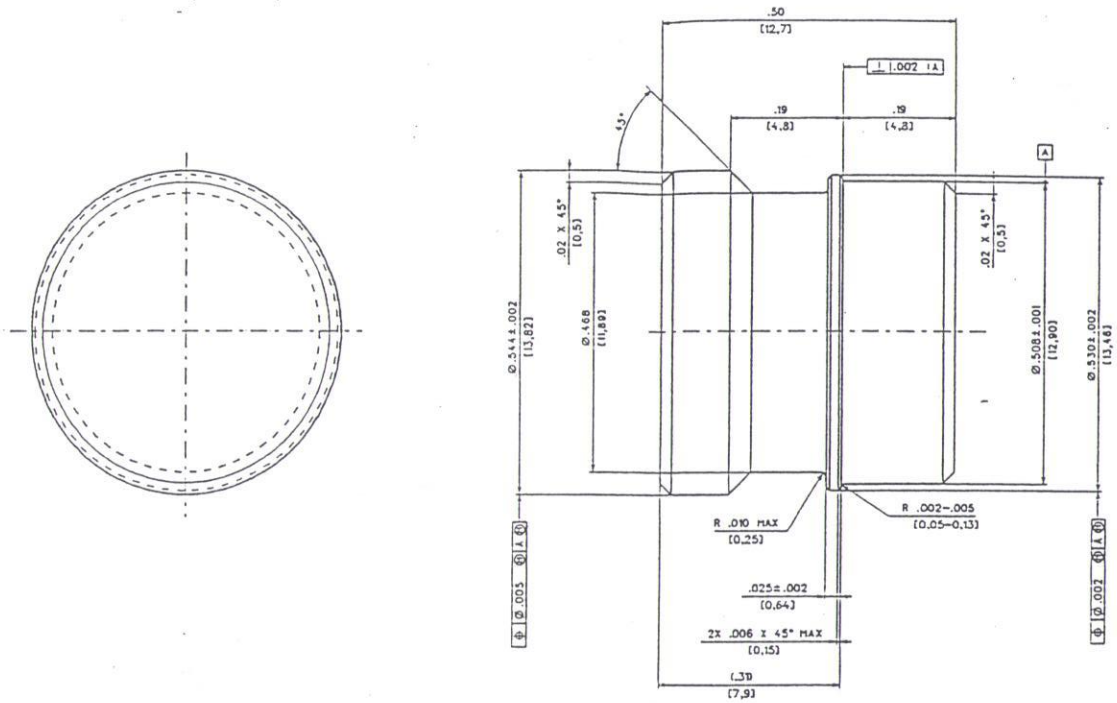

General Notes: UNLESS OTHERWISE SPECIFIED

1. TOLERANCES: .XX± .015, .XXX± .005, ANGULAR ±5°
2. DIMENSIONING AND TOLERANCING PER ISO 1101. ALL DIMENSIONS ARE IN INCHES.
3. MATERIAL: Zr-2 OR Zr-4
4. BREAK SHARP EDGES AND REMOVE ALL BURRS.
5. SURFACES SHALL BE 125√ PER ISO 1302.
6. NUMBERS SHOWN IN SQUARE BRACKETS ARE MILLIMETERS, TO BE USED FOR REFERENCE ONLY.

COMMENT ONLY
NOT RELEASED FOR FABRICATION

DRAWN BY/DATE	CHECKED BY/DATE
DLP 7-18-95	CLS 8-27-95
DLP 8-27-95	CLS 8-27-95
DLP 8-24-95	RLF 1-25-96
SAM 1-30-96	RLF 1-30-96
SAM 2-5-96	RLF 2-5-96

LNG/PROJ/CON/TYPE: RHE/EMPA/SBW/PWR

VIEW ORIENTATION
3RD ANGLE PROJECTION

INTERGRAPH ICADD

Siemens Power Corporation - ND
Advanced Nuclear Fuels Corporation

SCALE: 10:1

	7-17-95	DLP
	?	?
	?	?
	?	?
	?	?

TITLE: LOWER END CAP

EMF-309,250 R-0

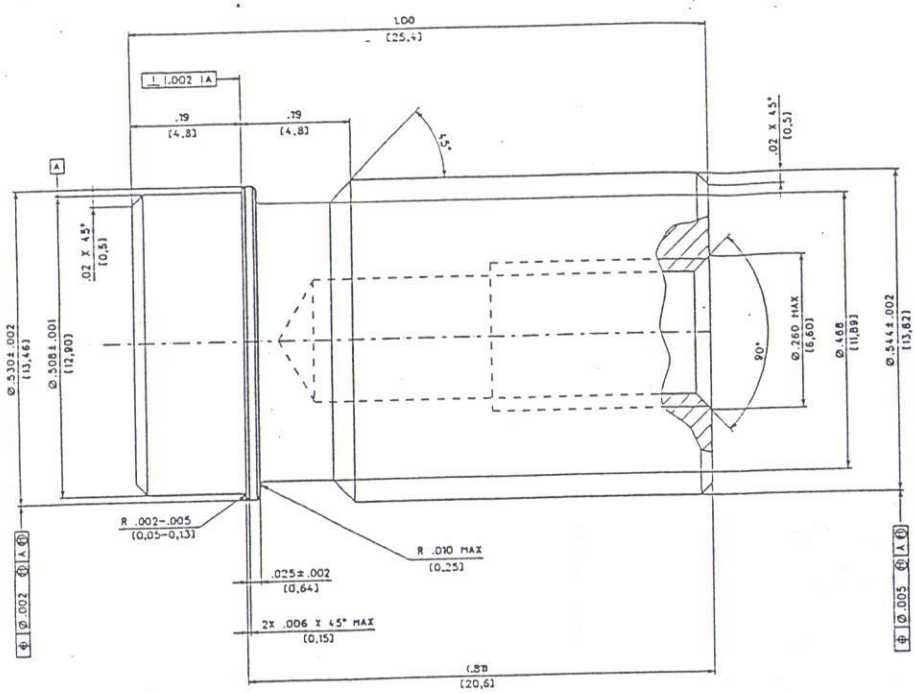

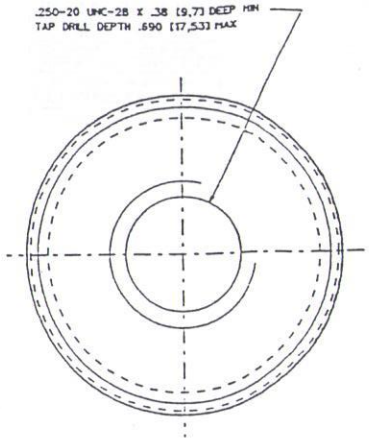

General Notes: UNLESS OTHERWISE SPECIFIED

1. TOLERANCES: .XX± .015, .XXX± .005, ANGULAR ±5°
2. DIMENSIONING AND TOLERANCING PER ISO 1101. ALL DIMENSIONS ARE IN INCHES.
3. MATERIAL: Zr-2 OR Zr-4
4. BREAK SHARP EDGES AND REMOVE ALL BURRS.
5. SURFACES SHALL BE 125/ PER ISO 1302.
6. NUMBERS SHOWN IN SQUARE BRACKETS ARE MILLIMETERS, TO BE USED FOR REFERENCE ONLY.

COMMENT ONLY
NOT RELEASED FOR FABRICATION

DRAWN BY/DATE	CHECKED BY/DATE
DLP 7-17-95	CLS 8-21-95
DLP 8-21-95	CLS 8-21-95
DLP 8-22-95	CLS 8-22-95
DLP 8-24-95	RLF 1-23-96
SAM 1-30-96	RLF 1-30-96
SAM 2-5-96	RLF 2-5-96

INC/PROJ/COM/TYPE: RHE/0994/BAN/MVR

VIEW ORIENTATION
3RD ANGLE PROJECTION

INTERGRAPH ICADD

Siemens Power Corporation - ND
Advanced Nuclear Fuels Corporation

SCALE 10:1

	7-17-95	DLP	
	?	?	
	?	?	
	?	?	
	?	?	

UPPER END CAP

EMF-309,184 R-0

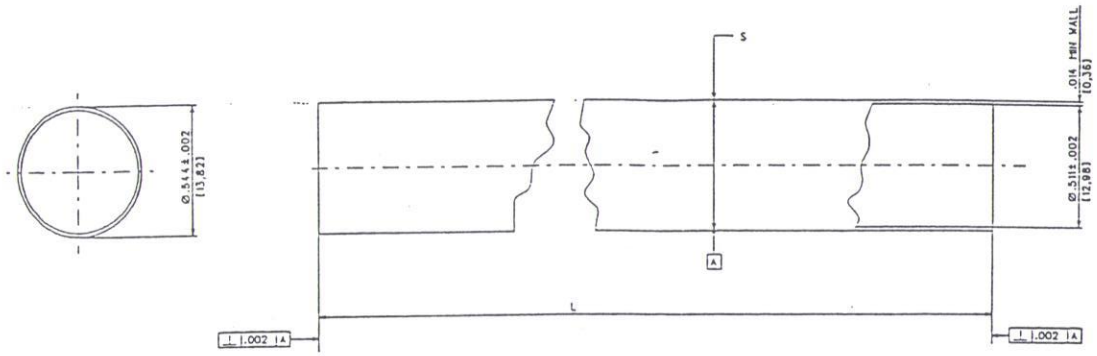

OPTION	LENGTH L	STRAIGHTNESS S
1	20.255±.015 [514.48]	— Ø.017 / Ø.015/12
2	39.630±.015 [1006.60]	— Ø.033 / Ø.015/12
3	6.0 ± .3 [152]	NA

COMMENT ONLY
NOT RELEASED FOR FABRICATION

DRAWN BY/DATE	CHECKED BY/DATE
DLP 7-20-95	CLS 8-22-95
DLP 8-22-95	CLS 8-22-95
DLP 8-24-95	RLF 1-30-96
SAM 1-30-96	RLF 2-1-96
SAM 2-5-96	2-5-96

LNG/PROJ/CON/TYPE: RHE/EPPA/TBAH/FMR

General Notes: UNLESS OTHERWISE SPECIFIED

1. TOLERANCES: .XX± .015, .XXX± .005, ANGULAR ±5°
2. DIMENSIONING AND TOLERANCING PER ISO 11OL ALL DIMENSIONS ARE IN INCHES.
3. MATERIAL: ZIRCALOY 4
4. REMOVE ALL BURRS. DEBURRING SHALL NOT REDUCE THE THICKNESS BELOW 80% OF THE MINIMUM WALL.
5. SURFACES SHALL BE 63/ PER ISO 1302.
6. NUMBERS SHOWN IN SQUARE BRACKETS ARE MILLIMETERS, TO BE USED FOR REFERENCE ONLY.

INTERGRAPH CADD

Siemens Power Corporation - ND
Advanced Nuclear Fuels Corporation

SCALE: 4:1

	7-20-95	DLP	SAM
	?	?	?
	?	?	?
	?	?	?
	?	?	?

CLADDING

EMF-309,185 R-0

SHEET 1 OF 1

VIEW ORIENTATION
3RD ANGLE PROJECTION

APPROVED | REV | REVISIONS

3. Experiment Fuel Elements

Page	Drawing #	Issue	Title
13	R63000	D	Fuel Rod, Burnup Credit Experiment
14	R63001	E	Spacer, Polyethylene
15	R63002	F	Cladding, Fuel Rod Burnup Credit
16	R63003	D	Plug, Upper
9[1]	EMF-309, 250	0	Lower End Cap

Note 1: Drawing in Section 2, Driver Fuel Elements

BURN UP CREDIT FUEL ROD DESCRIPTORS

#	DESCRIPTION	DIM "A"	DIM "B"
530[illegible]00	SHORT EXPERIMENT ROD	30.310	8.94
530[illegible]00	MEDIUM EXPERIMENT ROD	32.060	10.69
530[illegible]00	LONG EXPERIMENT ROD	33.810	12.44

NOTES:

1. GENERAL REQUIREMENTS AND DRAWING INTERPRETATION PER 9900000.
2. MARK DESIGN AGENCY PART NUMBER, SUFFIX, AND UNIT NO. PER 'FRAMATOME ANP' MARKING METHODS. TEXT DEPTH TO BE .005 MAX. LOCATE APPROX. AS SHOWN.
3. ELECTRON-BEAM WELDING PER 'FRAMATOME ANP' METHODS.
4. THIS MATERIAL SUPPLIED BY "SANDIA NATIONAL LABORATORIES", ALBUQUERQUE, NM.
5. CERTIFICATION OF MANUFACTURER'S TEST REPORTS (CMTR'S) REQUIRED.
6. MAY BE OBTAINED FROM "CENTURY SPRING CORPORATION", PO BOX 15287 222 EAST 16TH STREET, LOS ANGLES, CA. 90015.
7. MAY BE OBTAINED FROM "ALBUQUERQUE VALVE AND FITTING COMPANY", 2451 ALAMO SE, ALBUQUERQUE, NM 87106.
8. FOR 0.001" TO 0.004" THK. FOILS, USE 31 PELLETS AND 30 FOILS.
9. THIS PART TO BE SUPPLIED BY "FRAMATOME ANP".

DESIGN AGENCY PART NUMBER: R63000-000

REVISION

ISSUE	SHEET ZONE	PREPARED BY	DESCRIPTION	DATE	CHKD	APVD
A		D. SAMUEL.2992/ J. W. FISK.6433/ P.H.HELMICK.6423		02/28/2001		PHH
B	B2 A2 A1 D3	D. SAMUEL.2992/ P.H.HELMICK.6423	CHANGED: WELD CALLOUT, CROSS HATCH BALLOON CALLOUT SPRING DATA NOTE 9 SHORTEN "DIM B" .12 ADDED: FLAG TO NOTE 9	04/17/2001		PHH
C		D. SAMUEL.2992/ P.H.HELMICK.6423	MOVED MARKING, CHANGED PELLET CALLOUT INCREASED LENGTH OF "DIM A","DIM B"	08/28/2001		PHH
D		D. SAMUEL. 2992/ P.H. HELMICK. 6423	CHANGED TABLE "DIM A"&"DIM B". 30.310 'WAS' 31.310 32.060 'WAS' 33.310 33.810 'WAS' 35.310 8.94 'WAS' 9.94 10.69 'WAS' 11.94 12.44 'WAS' 13.94	11/28/2001		PHH

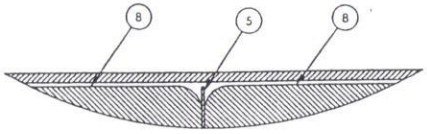

DETAIL C
SCALE 10 : 1

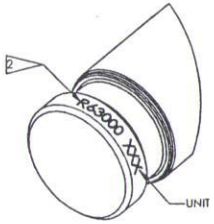

DETAIL E
SCALE 4 : 1

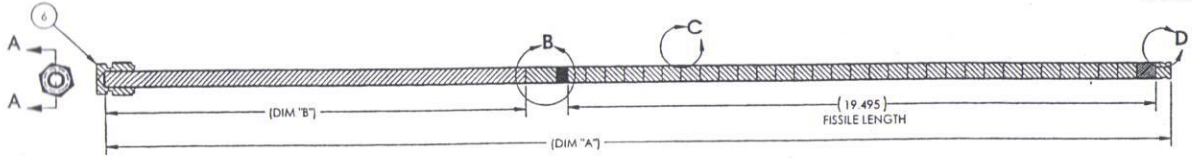

SECTION A-A

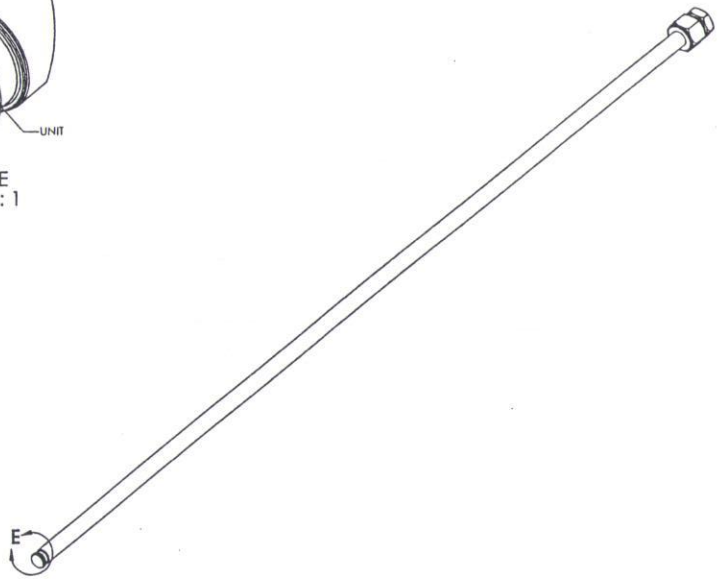

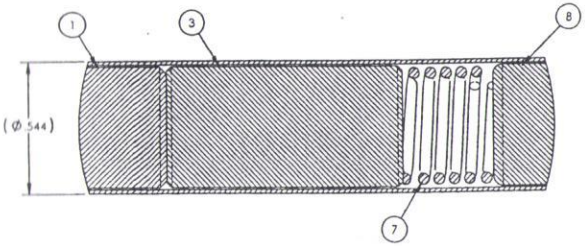

DETAIL B
SCALE 4 : 1

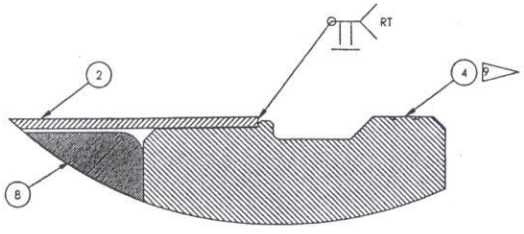

DETAIL D
SCALE 10 : 1

QTY	QTY	QTY	PART NO	DESCRIPTION	NOTE	ZONE	ITEM
31	31	31		FUEL PELLET, 4.3% ENRICHED UO2 .498 DIA X .825 LG	4.8		8
1	1	1	71505S	SPRING, COMP, CRES, .480 OD, .390 ID, .63 LG	6		7
1	1	1	SS-14M0-C	CAP, END, 14MM	7		6
30	30	30		SPACER, FOIL	4.8		5
1	1	1	EMF 30@250-FL-0	LOWER END CAP	2,5,9		4
1	1	1	R63003-000	PLUG, UPPER	5		3
1		1	R63002-300	CLADDING,ZIRCONIUM ALLOY	3,5		2
	1	1	R63002-200	CLADDING,ZIRCONIUM ALLOY	3,5		
		1	R63002-100	CLADDING,ZIRCONIUM ALLOY	3,5		
1		1	R63001-300	SPACER, POLYETHYLENE	5		1
	1	1	R63001-200	SPACER, POLYETHYLENE	5		
		1	R63001-100	SPACER, POLYETHYLENE	5		

ALT-ALTERNATE AR-AS REQ'D AR5-AS REQ'D PER ASSY EM-EXPENSE MATERIAL NA-DOCUMENT PM-PROCESS MATERIAL

PART NUMBER R63000-300 | PART NUMBER R63000-200 | PART NUMBER R63000-100

SHEET 1 2 3 4 5 6
ISSUE D

TITLE: FUEL ROD, BURNUP CREDIT EXPERIMENT (BUC)

PART CLASSIFICATION: UNCLASSIFIED

DRAWING CLASSIFICATION: UNCLASSIFIED

SIZE D | DRAWING NUMBER R63000

CAGE 14213 | SCALE 1:2 | SHEET 1 OF 1

PATH SA-REL-11/28/2001 | ORIGIN SA-SolidWorks 2001

BURN UP CREDIT POLYETHYLENE DESCRIPTORS		
PART #	DESCRIPTION	DIM "L"
R63001-100	SHORT POLYETHYLENE	8.94
R63001-200	MEDIUM POLYETHYLENE	10.69
R63001-300	LONG POLYETHYLENE	12.44

NOTES:

1. GENERAL REQUIREMENTS AND DRAWING INTERPRETATION PER 9900000.
2. MATERIAL: PURE HIGH DENSITY POLYETHYLENE (CAT# 213) OBTAINED FROM REACTOR EXPERIMENTS, INC., 1275 HAMMERWOOD AVE. SUNNYVALE, CA. 94089-2231.
3. CERTIFICATION OF MANUFACTURER'S TEST REPORTS (CMTR'S) REQUIRED.

DESIGN AGENCY PART NUMBER: SEE TABULATION

REVISION

ISSUE	SHEET ZONE	PREPARED BY / DESCRIPTION	DATE	CHKR	APVD
A		D. SAMUEL, 2992/ J. W. FISK, 6433/ P.H. HELMICK, 6423	02/28/2001		PHH
B		D. SAMUEL, 2992/ P.H. HELMICK, 6423 ADDED: CHAMFER CHANGE: .496 WAS .498	05/17/2001		PHH
C		D. SAMUEL, 2992/ P.H. HELMICK, 6423 INCREASED LENGTH "DIM L"	08/28/2001		PHH
D		D. SAMUEL, 2992/P.H. HELMICK, 6423 CHANGED TOL. OF "DIM L"	09/14/2001		PHH
E		D. SAMUEL, 2992/ P.H. HELMICK, 6423 CHANGED TABLE: "DIM L" 8.94 WAS 9.94 10.69 WAS 11.95 12.44 WAS 13.94	11/28/2001		PHH

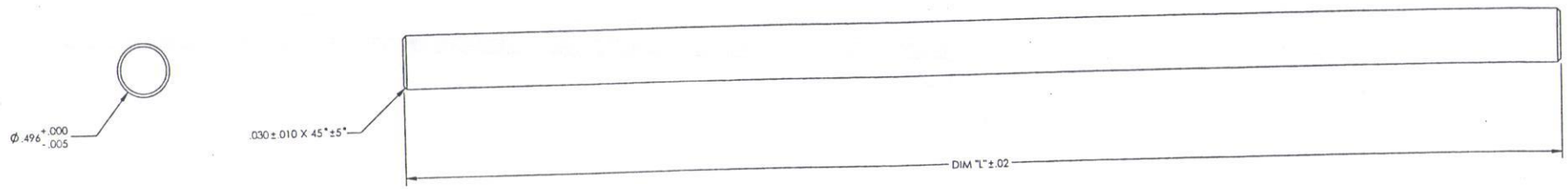

SHEET	1	2	3	4	5	6
ISSUE	E					

TITLE: SPACER, POLYETHYLENE (BUC

PART CLASSIFICATION: UNCLASSIFIED

DRAWING CLASSIFICATION: UNCLASSIFIED

SIZE: D

DRAWING NUMBER: R63001

CAGE: 14213 SCALE: 2:1 SHEET 1 OF

STATUS: SA-REL-11/28/2001 ORIGIN: SA-SolidWorks 2001

BURNUP CREDIT FUEL ROD CLADDING DESCRIPTORS		
PART #	DESCRIPTION	DIM "L"
R63002-100	SHORT FUEL CLAD	30.00
R63002-200	MEDIUM FUEL CLAD	31.75
R63002-300	LONG FUEL CLAD	33.50

NOTES:

1. GENERAL REQUIREMENTS AND DRAWING INTERPRETATION PER 9900000.
2. MATERIAL: CLADDING, ZIRCONIUM-TIN ALLOY UNS R60804 PER ASTM B811-97. .544±.002 OD X .511±.002 ID. .014 WALL MIN.
3. CERTIFICATION OF MANUFACTURER'S TEST REPORTS (CMTR'S) REQUIRED.

DESIGN AGENCY PART NUMBER: R63002-000

REVISION

ISSUE	SHEET ZONE	PREPARED BY / DESCRIPTION	DATE	CHKD	APVD
A		D. SAMUEL,2992/ J. W. FISK. 6433/ P.H. HELMICK. 6423	02/28/2001		PHH
B		D. SAMUEL,2992/ P.H. HELMICK. 6423 ADDED: TOLERANCE TO NOTE 2 FCB TO DIM "L"	04/30/2001		PHH
C		D. SAMUEL,2992/ P.H. HELMICK. 6423 CHANGED: NOTE 2 (MATERIAL) INCREASED LENGTH "DIM L"	08/28/2001		PHH
D		D. SAMUEL,2992/ P.H. HELMICK. 6423 CHANGED OD: .544 'WAS' .541	09/17/2001		PHH
E		D. SAMUEL,2992/P.H. HELMICK. 6423 CHANGED NOTE 2: .544 'WAS' .541 CHANGED TABLE: DIM "L" 30.00 'WAS' 31.00 31.75 'WAS' 33.00 33.50 'WAS' 35.00	11/28/2001		PHH
F		D. SAMUEL. 2992/P.H. HELMICK. 6423 CORRECTED TYPO: (DIM "L") 33.50 'WAS' 33.25	1/7/2002		PHH

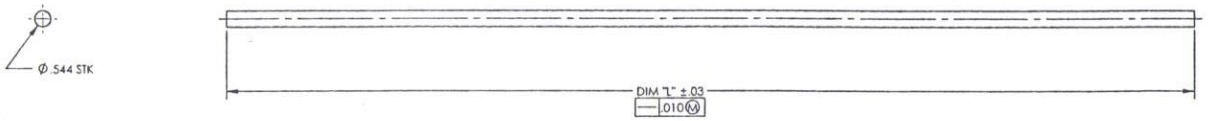

SHEET	1	2	3	4	5	6
ISSUE	F					

PART CLASSIFICATION: UNCLASSIFIED

DRAWING CLASSIFICATION: UNCLASSIFIED

TITLE: CLADDING, FUEL ROD BURNUP CREDIT (BUC)

SIZE: D | DRAWING NUMBER: R63002

CAGE: 14213 | SCALE: 1:2 | SHEET 1 OF 1

MADE: SA-REL-1/7/2002 | ORIGIN: SA-SolidWorks 2001

NOTES:

1. GENERAL REQUIREMENTS AND DRAWING INTERPRETATION PER 9900000.
2. MATERIAL: BAR, ZIRCONIUM ALLOY(ZIRCALLOY-2 OR ZIRCALLOY-4) PER ASTM B 550/B 550M/97.
3. CERTIFICATION OF MANUFACTURER'S TEST REPORTS (CMTR'S) REQUIRED.

DESIGN AGENCY PART NUMBER: R63003-000

REVISION

ISSUE	SHEET ZONE	PREPARED BY	DESCRIPTION	DATE	CHKD	APVD
A		D. SAMUEL. 2992/ J. W. FISK. 6433/ P. H. HELMICK. 6423		02/28/2001		PHH
B		D. SAMUEL. 2992/ P.H. HELMICK.6423	CHANGED: .496 "WAS" .498 NOTE 2 (MATERIAL)	05/17/2001		PHH
C		D. SAMUEL. 2992/ P.H. HELMICK.6423	CHANGED LENGTH TOL: .005 "WAS" .02	09/17/2001		PHH
D		D. SAMUEL. 2992/ P.H. HELMICK. 6423	ADDED" ZIRCALLOY-2 OR " TO NOTE 2	11/28/2001		PHH

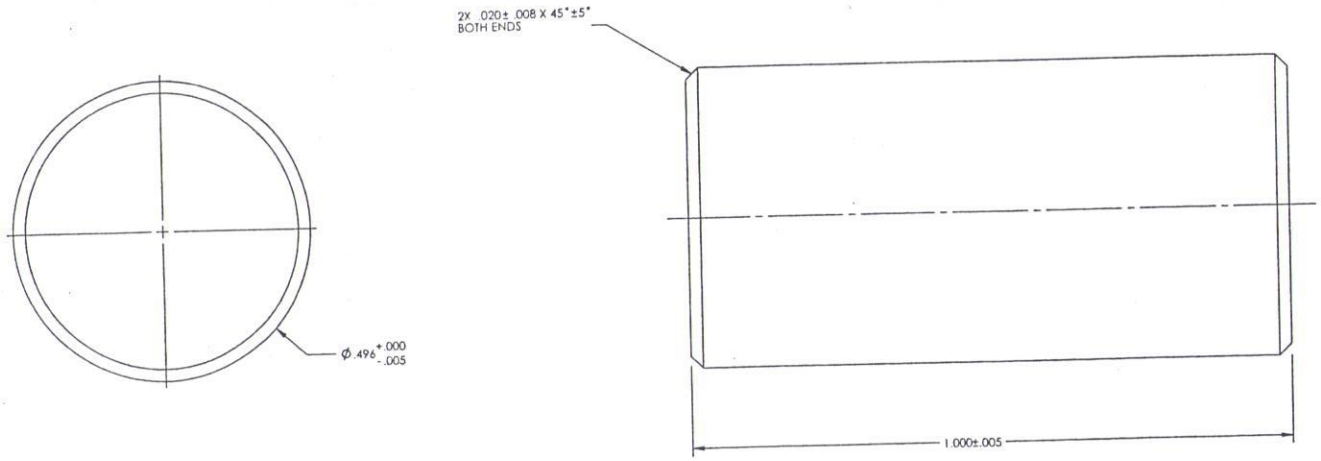

SHEET	1	2	3	4	5	6
ISSUE	D					

PART CLASSIFICATION: UNCLASSIFIED

DRAWING CLASSIFICATION: UNCLASSIFIED

TITLE: PLUG, UPPER (BUC)

SIZE: D

DRAWING NUMBER: R63003

CAGE: 14213 SCALE: 10:1 SHEET 1 OF 1

STATUS: SA-REL-11/28/2001

ORIGIN: SolidWorks 2001

GEOMETRIC PRECISION N/A

4. Control/Safety Fuel Elements

Page	Drawing #	Issue	Title
18	R64946	F	Safety Fuel Rod Element
21	R64948	F	Sleeve, B4C Assembly
10[1]	EMF-309, 184	0	Upper End Cap

Note 1: Drawing in Section 2, Driver Fuel Elements

NOTES:

1. GENERAL REQUIREMENTS AND DRAWING INTERPRETATION PER 9900000.
2. MARK DESIGN AGENCY PART NUMBER AND UNIT NO. PER "FRAMATOME ANP" MARKING METHODS. TEXT DEPTH TO BE .005 MAX., LOCATE APPROX. AS SHOWN.
3. ELECTRON-BEAM WELDING PER "FRAMATOME ANP" METHODS.
4. THIS MATERIAL SUPPLIED BY "SANDIA NATIONAL LABORATORIES", ALBUQUERQUE, NM.
5. CERTIFICATION OF MANUFACTURER'S TEST REPORTS (CMTR'S) REQUIRED.
6. MAY BE OBTAINED FROM: "CENTURY SPRING CORPORATION", PO BOX 15287, 222 EAST 16TH STREET, LOS ANGELES, CA 90015, (800) 237-5225.
7. MAY BE OBTAINED FROM: "ALBUQUERQUE VALVE & FITTING CO.", 2451 ALAMO SE, ALBUQUERQUE, NM 87106.
8. MAY BE OBTAINED FROM: "REACTOR EXPERIMENTS, INC.", 1275 HAMMERWOOD AVE., SUNNYVALE, CA 94089-2231.
9. THIS PART TO BE SUPPLIED BY "FRAMATOME ANP".

DESIGN AGENCY PART NUMBER: R64946-000

REVISION

ISSUE	SHEET ZONE	PREPARED BY / DESCRIPTION	DATE	CHKR	APVD
B		D. SAMUEL, 2992/P.H.HELMICK,6423 INCREASED OVERALL LENGTH REMOVED: LEVELING PAD NOTE 9 (WELDING) CHANGED: BOTTOM PLUG NOTE 2(MARKING) MARKING LOCATION ADDED NEW NOTE 9	08/28/2001		PHH
C		D. SAMUEL,2992/P.H.HELMICK,6423 CHANGE: ITEM 5 LENGTH TOL .02'WAS' 0 ITEM 6 LENGTH TOL .005'WAS' .03 RENUMBER ITEMS 7 TO ITEM 10 ADD: ITEM 7 ADJUST OVERALL LENGTH FOR NEW PART	09/19/2001		PHH
D		CHANGE: LENGTH OF CLADDING LENGTH OF B4C ASSEMBLY	10/10/2001		PHH
E	3A3	D. SAMUEL,2992/P.H.HELMICK,6423 ADDED 7 TO L/M ITEM 9 NOTE COLUMN CHANGE: ITEM 4 'WAS' ITEM 3 L/M P/N (ITEM 4): R64946 'WAS' R65946	11/29/2001		PHH
F		D. SAMUEL, 2992/ P. H. HELMICK, 6423 SHOW ITEM 7 DETAIL ON SHEET 2	1/3/2002		PHH

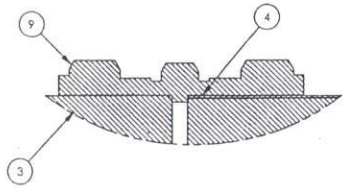

DETAIL D
SCALE 2 : 1

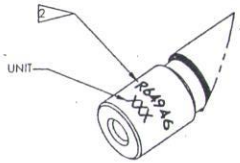

DETAIL E
SCALE 2 : 1

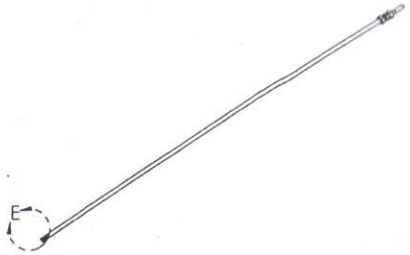

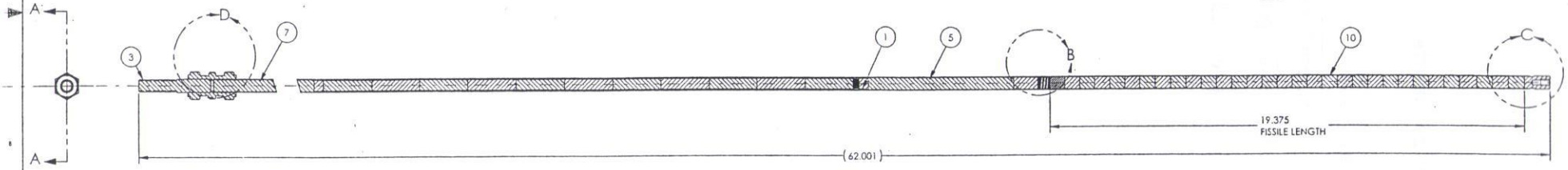

SECTION A-A
SCALE 1 : 2

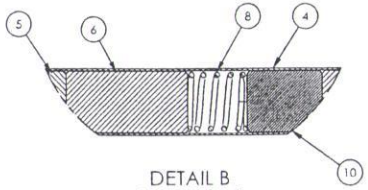

DETAIL B
SCALE 2 : 1

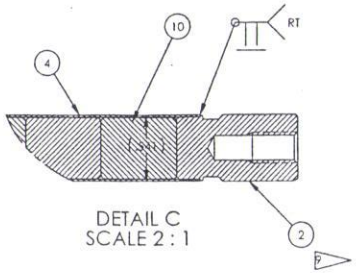

DETAIL C
SCALE 2 : 1

QTY	PART NO	DESCRIPTION	NOTE	ZONE	ITEM
31		FUEL PELLET, 4.9% ENRICHED UO2, .498 DIA X .625 LG			10
1	SS-14MO-6	UNION, STAINLESS, 14MM TUBE	7		9
1	715055	SPRING, COMP., CRES, .480 OD, .390 ID, .63 LG	6		8
1	R64946-500	SPACER, POLYETHYLENE, 8.00 LG	5 B		7
1	R64946-500	PLUG, CENTER	4		6
1	R64946-400	SPACER, POLYETHYLENE, 8.00 LG	5 B		5
1	R65946-300	CLADDING, ZIRCONIUM-TIN ALLOY			4
1	R64946-200	PLUG, UPPER	3 B		3
1	EMF 309184-R-0	UPPER END CAP	2 5 B		2
1	R64946-000	SLEEVE, B4C ASSEMBLY	5		1
NA	9900000	GENERAL REQUIREMENTS AND DRAWING INTERPRETATION			
NA	9919100	MARKING GENERAL METHODS			

ALT-ALTERNATE AR-AS REQ'D ARS-AS REQ'D PER ASS'Y EM-EXPENSE MATERIAL NA-DOCUMENT PM-PROCESS MATERIAL

SHEET	1	2	3	4	5	6
ISSUE	F	F	F			

TITLE: SAFETY FUEL ROD ASSEMBLY (BUC)

PART CLASSIFICATION: UNCLASSIFIED

DRAWING CLASSIFICATION: UNCLASSIFIED

SIZE: D DRAWING NUMBER: R64946

CAGE: 14213 SCALE: 1:2 SHEET 1 OF 3

PARAS: SA-REL-1/3/2002 ORIGIN: SolidWorks 2001

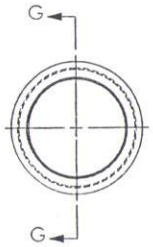

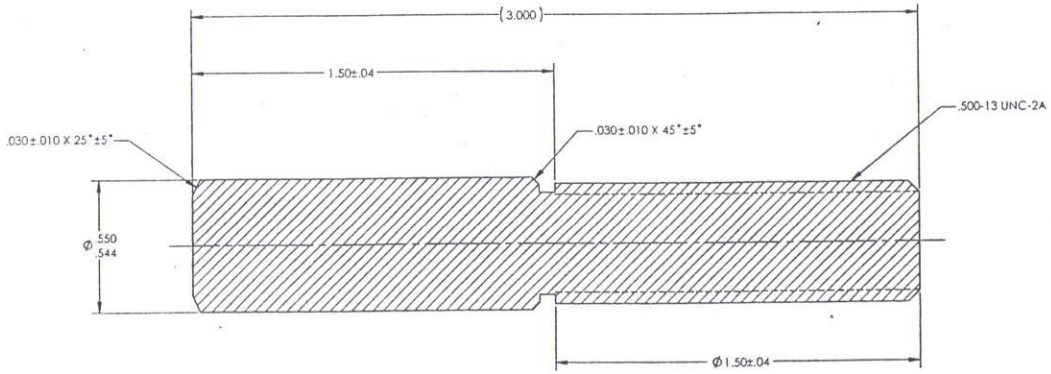

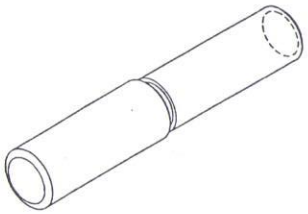

SECTION G-G

ITEM 3, PLUG, UPPER
MATERIAL: BAR, CRES 304 OR 316 PER ASTM A276

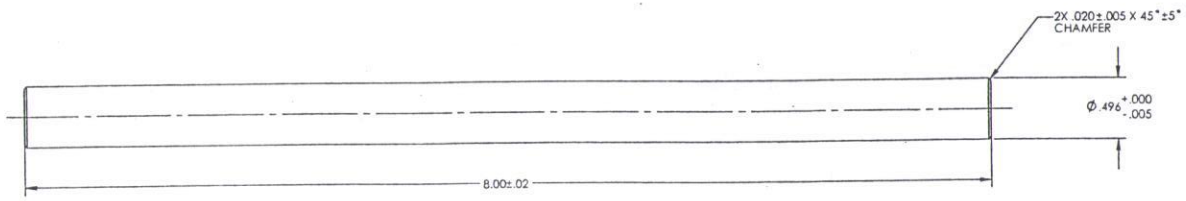

ITEM 7, SPACER
MATERIAL: PURE HIGH DENSITY POLYETHYLENE (CAT# 213)

DRAWING NUMBER R64946			
DRAWING CLASSIFICATION UNCLASSIFIED			
SIZE D	CAGE CODE 14213	SCALE 4:1	
	SHEET F	SHEET 2 OF 3	
STATUS SA-PEL-1/3/2002			

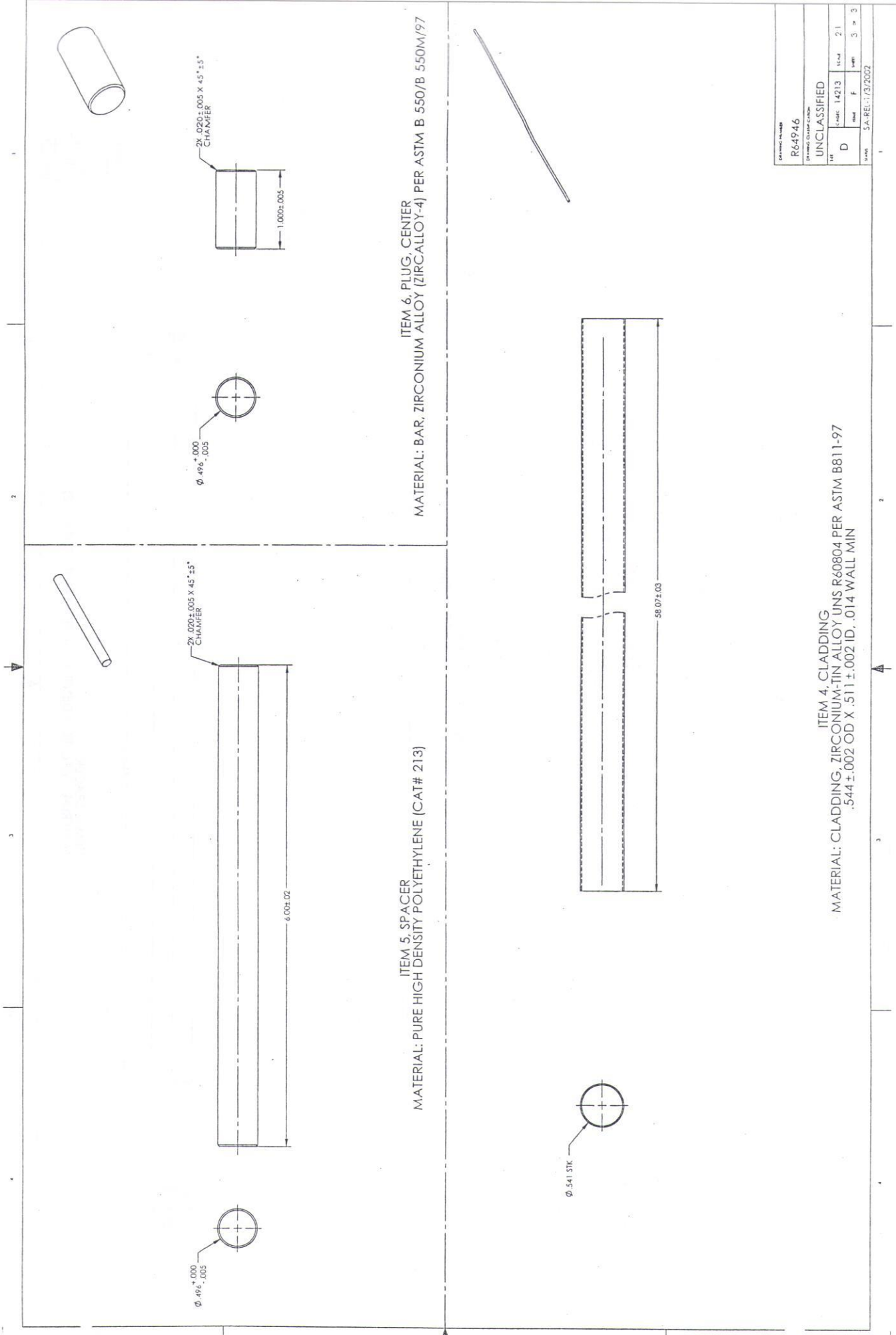
2X .020±.005 X 45°±5° CHAMFER
1.000±.005
Ø .496 +.000 -.005
ITEM 6, PLUG, CENTER
MATERIAL: BAR, ZIRCONIUM ALLOY (ZIRCALLOY-4) PER ASTM B 550/B 550M/97
2X .020±.005 X 45°±5° CHAMFER
6.00±.02
Ø .496 +.000 -.005
ITEM 5, SPACER
MATERIAL: PURE HIGH DENSITY POLYETHYLENE (CAT# 213)
58.07±.03
Ø .541 STK
ITEM 4, CLADDING
MATERIAL: CLADDING, ZIRCONIUM-TIN ALLOY UNS R60804 PER ASTM B811-97
.544±.002 OD X .511±.002 ID, .014 WALL MIN
R64946
UNCLASSIFIED
D
14213
F
2:1
3 OF 3
5A-REL: 1/3/2002

NOTES:

1. GENERAL REQUIREMENTS AND DRAWING INTERPRETATION PER 9900000.
2. ELECTRON-BEAM WELDING GENERAL PROCESS REQUIREMENTS PER 9912601-00.
3. CERTIFICATION OF MANUFACTURER'S TEST REPORTS (CMTR"S) REQUIRED.

DESIGN AGENCY PART NUMBER	REVISION ISSUE	SHEET ZONE	PREPARED BY / DESCRIPTION	DATE	CHKD	APVD
R6494B-000	A		K. McBRIDE, 2993/ J. FISK, 6433/P. HELMICK, 6423	08/30/2001		PH
	B		D.SAMUEL, 2992/ P.H. HELMICK, 6423 CHANGED ITEM 4 TO ITEM 3 ADDED NEW ITEM 4 CHANGED BOM: PELLET WAS' POWER CHANGE TOTAL LENGTH ADD GROOVE TO ITEM 1 REMOVE NOTE 4 REMOVE FLAG ON NOTE 6 RENUMBER NOTES 5&6	09/17/2001		PHH
	C		D. SAMUEL ,2992/ P.H.HELMICK, 6423 CHANGED: PELLET LENGTH PELLET DIAMETER TUBE LENGTH REMOVE: NOTE 4. ADD: MARKING FOR SPRING END	10/10/2001		PHH
	D		D. SAMUEL ,2992/ P.H.HELMICK, 6423 CHANGED PELLET COUNT .	11/08/2001		PHH
	E	2A3	D. SAMUEL, 2992/P.H. HELMICK, 6423 CHANGE: .437 'WAS' .439	11/28/2001		PHH
	F	2A3	D. SAMUEL, 2992/ CHANGE: .02 X 45° CHAMFER WITH .02 - .04R	2/5/2002		PHH

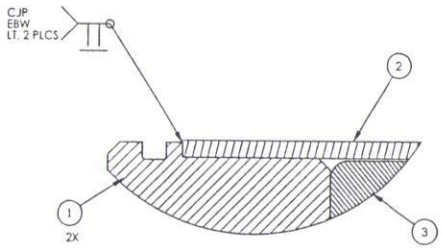

DETAIL B
SCALE 10 : 1

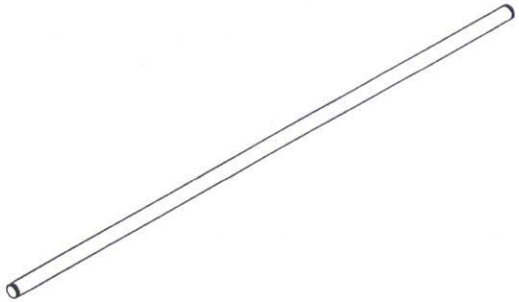

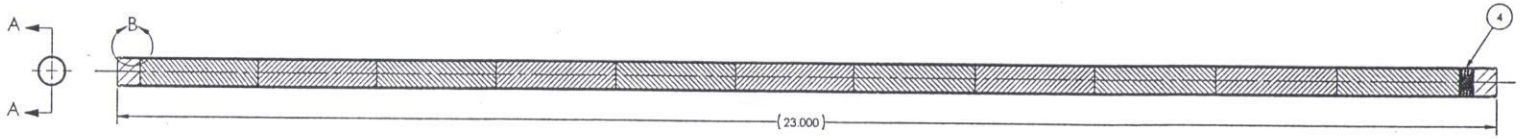

SECTION A-A

QTY	PART NO	DESCRIPTION	NOTE	ZONE	ITEM
1	S-1096	SPRING, COMP., CRES, .406 OD, .356 ID, .44 LG			4
11	R6494B-300	B4C SINTERED PELLET, 1.00 LG			3
1	R6494B-200	TUBE, CLADDING, ALUMINUM, 6061-T6 PER ASTM B-210			2
2	R6494B-100	END, TUBE, BAR, ALUMINUM, 5086-H111, PER ASTM B-211			1
NA	9912601	WELDING, ELECTRON-BEAM	2		
NA	9900000	GENERAL REQUIREMENTS AND DRAWING INTERPRETATION	1		

ALT-ALTERNATE AR-AS REQ'D ARS-AS REQ'D PER ASS'Y EM-EXPENSE MATERIAL NA-DOCUMENT PM-PROCESS MATERIAL

SHEET	1	2	3	4	5	6
ISSUE	F	F				

TITLE: SLEEVE, B4C ASSEMBLY (BUC)

PART CLASSIFICATION: UNCLASSIFIED

DRAWING CLASSIFICATION: UNCLASSIFIED

SIZE: D

DRAWING NUMBER: R6494B

CAGE: 14213 SCALE: 1:1 SHEET 1 OF 2

STATUS: SA-REL-2/5/2002 ORIGIN: SA-SolidWorks 2001

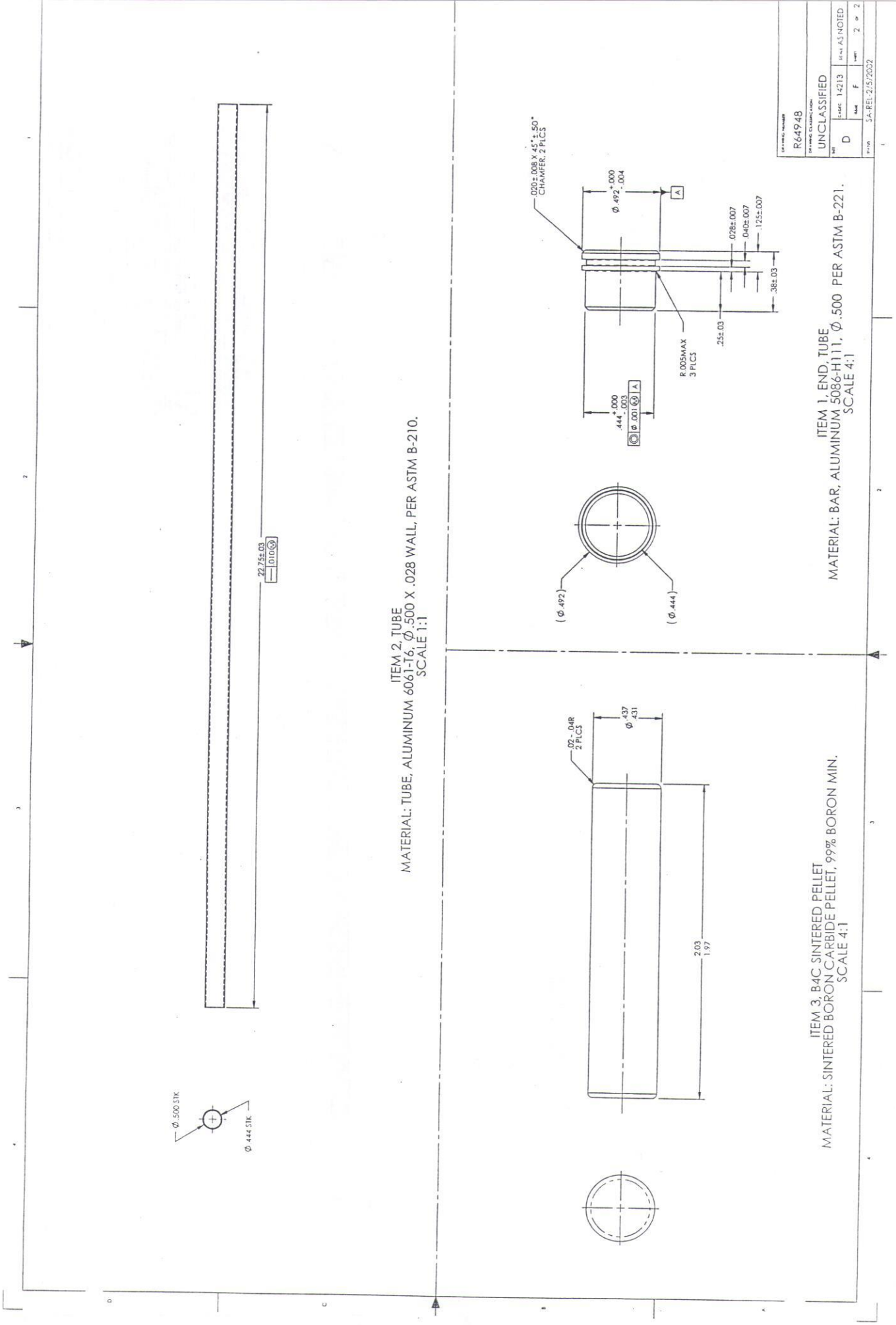
R64948
UNCLASSIFIED
D
14213
SEE AS NOTED
F
2 OF 2
SA-REL-2/5/2022
.020±.008 X 45°±.50° CHAMFER, 2 PLCS
Ø.492 +.000 -.004
A
.028±.007
.040±.007
.126±.007
.38±.03
.25±.03
R.005MAX 3 PLCS
.444 +.000 -.003
Ø .001 Ⓜ A
(Ø.492)
(Ø.444)
ITEM 1, END, TUBE
MATERIAL: BAR, ALUMINUM 5086-H111, Ø.500 PER ASTM B-221.
SCALE 4:1
22.75±.03
.0100 Ⓜ
ITEM 2, TUBE
MATERIAL: TUBE, ALUMINUM 6061-T6, Ø.500 X .028 WALL, PER ASTM B-210.
SCALE 1:1
.02-.04R 2 PLCS
Ø.437 .431
2.03 1.97
ITEM 3, B4C SINTERED PELLET
MATERIAL: SINTERED BORON CARBIDE PELLET, 99% BORON MIN.
SCALE 4:1
Ø.500 STK
Ø.444 STK

5. Source Fuel Element

Page	Drawing #	Issue	Title
24	R64913	D	Source Rod, Burnup Credit Experiment
10[1]	EMF-309, 184	0	Upper End Cap

Note 1: Drawing in Section 2, Driver Fuel Elements

NOTES:

1. GENERAL REQUIREMENTS AND DRAWING INTERPRETATION PER 9900000.
2. MARK DESIGN AGENCY PART NUMBER, AND UNIT NO. PER "FRAMATOME ANP" MARKING METHODS. TEXT DEPTH TO BE .005 MAX. LOCATE APPROX. AS SHOWN.
3. ELECTRON-BEAM WELDING PER "FRAMATOME ANP" METHODS.
4. THIS MATERIAL SUPPLIED BY "SANDIA NATIONAL LABORATORIES", ALBUQUERQUE, NM.
5. CERTIFICATION OF MANUFACTURER'S TEST REPORTS (CMTR'S) REQUIRED.
6. MAY BE OBTAINED FROM "CENTURY SPRING CORPORATION", PO BOX 15287 222 EAST 16TH STREET, LOS ANGLES, CA. 90015.
7. MAY BE OBTAINED FROM "ALBUQUERQUE VALVE & FITTING CO.", 2451 ALAMO SE, ALBUQUERQUE, NM 87106.
8. MAY BE OBTAINED FROM "REACTOR EXPERIMENTS INC.", 1275 HAMMERWOOD AVE., SUNNYVALE, CA. 94089-2231.
9. THIS PART TO BE SUPPLIED BY "FRAMATOME ANP".

DESIGN AGENCY PART NUMBER: R64913-000

REVISION					
ISSUE	SHEET ZONE	PREPARED BY / DESCRIPTION	DATE	CHKD	APVD
C		D. SAMUEL 2992/ P. H. HELMICK 6423 CHANGED ITEM 3 OD: .544 "WAS" .554 ITEM 5 TOL: .005 "WAS" .03	09/17/2001		PHH
D	3A2 3B3	D. SAMUEL 2992/ P. H. HELMICK 6423 ADDED DETAIL FOR ITEM 6 CHANGE ITEM 5 CHAM. TOL: .005 "WAS" .008	12/03/2001		PHH

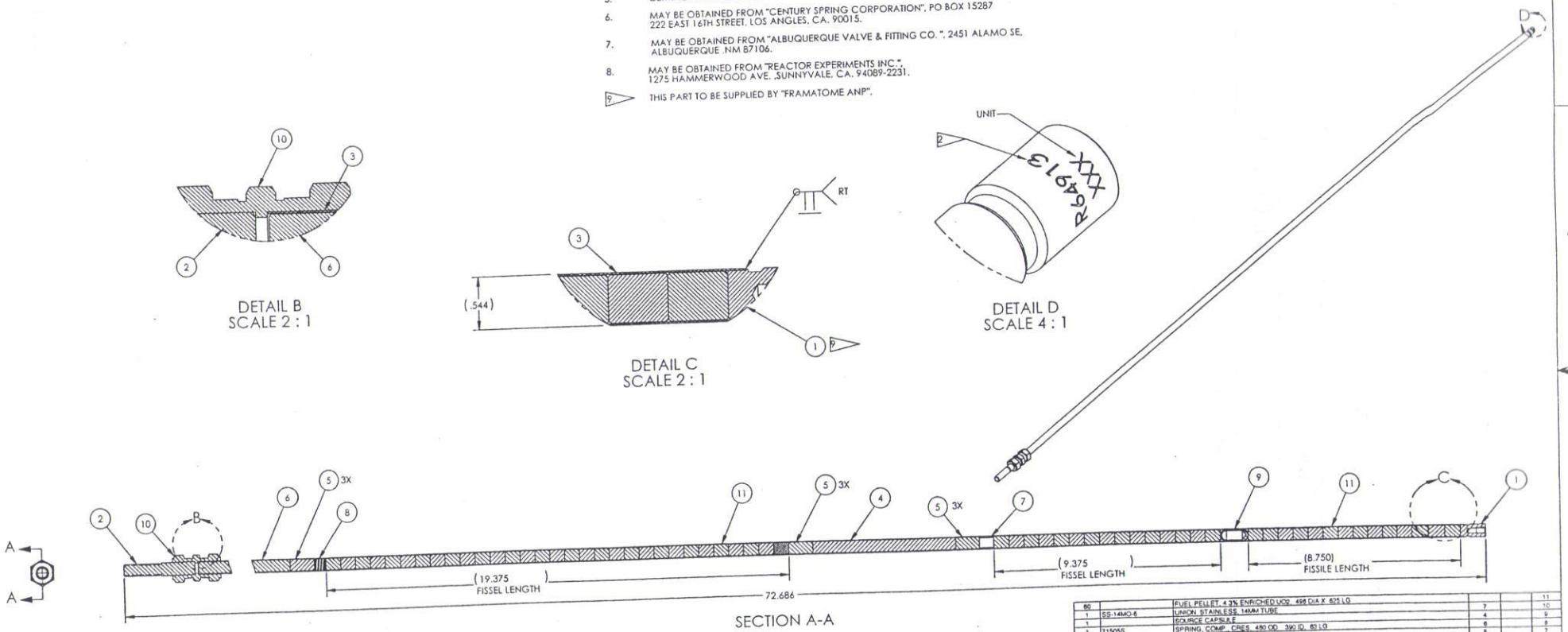

QTY	PART NO	DESCRIPTION	NOTE	ZONE	ITEM
60		FUEL PELLET, 4.3% ENRICHED UO2 .498 DIA X .625 LG			11
1	SS-14MO-6	UNION, STAINLESS, 14MM TUBE	7		10
1		SOURCE CAPSULE	4		9
1	71505S	SPRING, COMP., CRES, .490 OD .390 ID, .80 LG	6		8
1	R64913-700	SPACER, ALUMINUM, .825 LG	5		7
1	R64913-600	SPACER, POLYETHYLENE	5.8		6
3	R64913-500	PLUG, CENTER	5		5
1	R64913-400	SPACER, POLYETHYLENE, 8.00 LG	5.8		4
1	R64913-300	CLADDING, SAFETY ROD	3.5		3
1	R64913-200	PLUG, UPPER	5		2
1	EMF 309184-R-0	UPPER END CAP	2.5.9		1
NA	9919100	MARKING, GENERAL METHODS			
NA	9900000	GENERAL REQUIREMENTS AND DRAWING INTERPRETATION			

ALT-ALTERNATE AR-AS REQ'D ARS-AS REQ'D PER ASS'Y EM-EXPENSE MATERIAL NA-DOCUMENT PM-PROCESS MATERIAL

SHEET	1	2	3	4	5	6
ISSUE	D	D	D			

TITLE: SOURCE ROD, BURNUP CREDIT EXPERIMENT (BUC)

PART CLASSIFICATION: UNCLASSIFIED

DRAWING CLASSIFICATION: UNCLASSIFIED

SIZE: D | DRAWING NUMBER: R64913

CAGE: 14213 | SCALE: 1:2 | SHEET 1 OF 3

MANS: SA-REL-12/03/2001 | DPSW: SolidWorks 2001

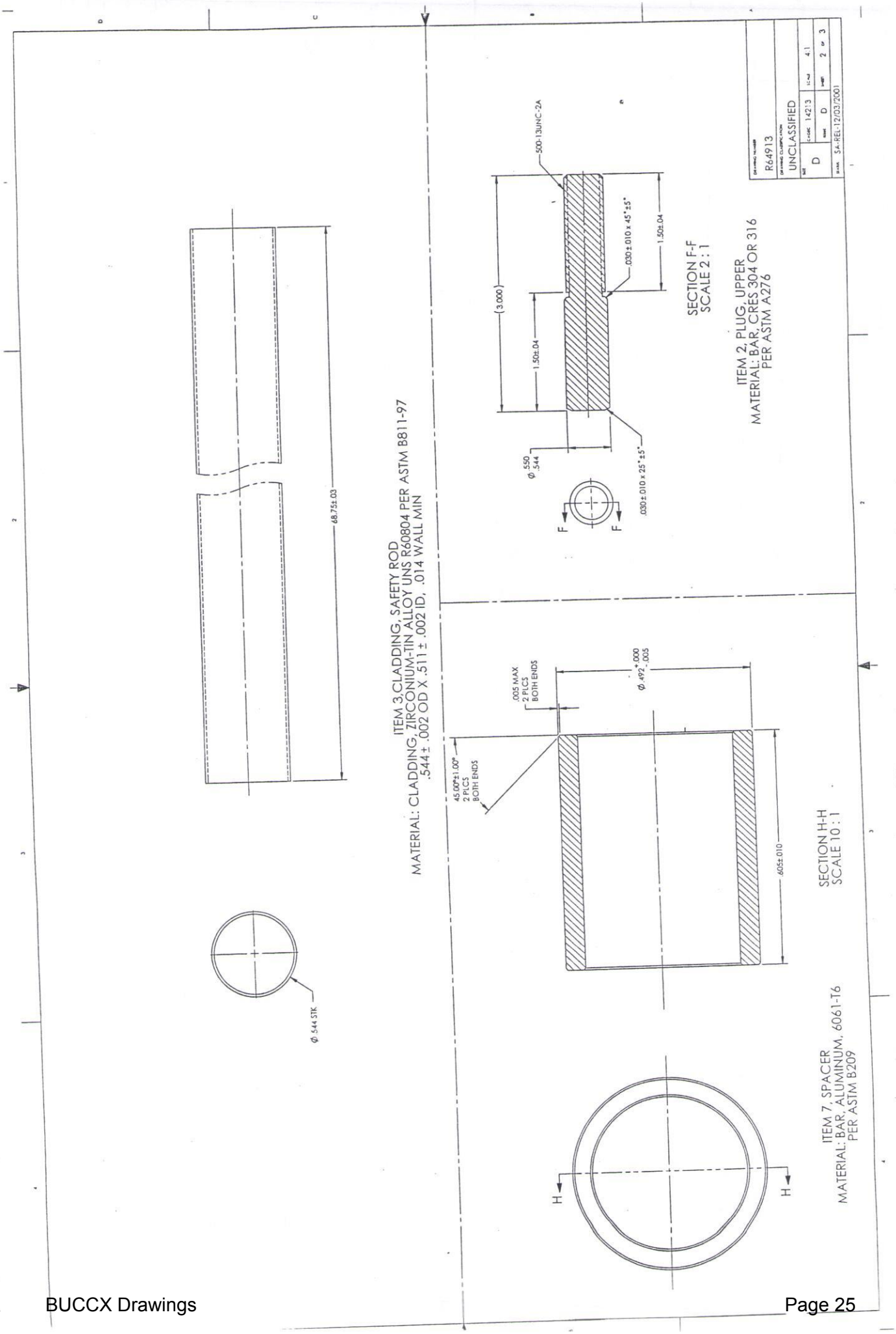
68.75±.03
ITEM 3,CLADDING, SAFETY ROD
MATERIAL: CLADDING, ZIRCONIUM-TIN ALLOY UNS R60804 PER ASTM B811-97
.544± .002 OD X .511± .002 ID, .014 WALL MIN
Ø .544 STK
500-13UNC-2A
(3.000)
1.50±.04
1.50±.04
.030±.010 x 45°±5°
.030±.010 x 25°±5°
Ø .550 .544
F
F
SECTION F-F
SCALE 2 : 1
ITEM 2, PLUG, UPPER
MATERIAL: BAR, CRES 304 OR 316
PER ASTM A276
R64913
UNCLASSIFIED
D
142/3
4:1
D
2 OF 3
SA-REL-12/03/2001
.005 MAX
2 PLCS
BOTH ENDS
Ø .492 +.000 -.005
45.00°±1.00°
2 PLCS
BOTH ENDS
.605±.010
SECTION H-H
SCALE 10 : 1
H
H
ITEM 7, SPACER
MATERIAL: BAR, ALUMINUM, 6061-T6
PER ASTM B209

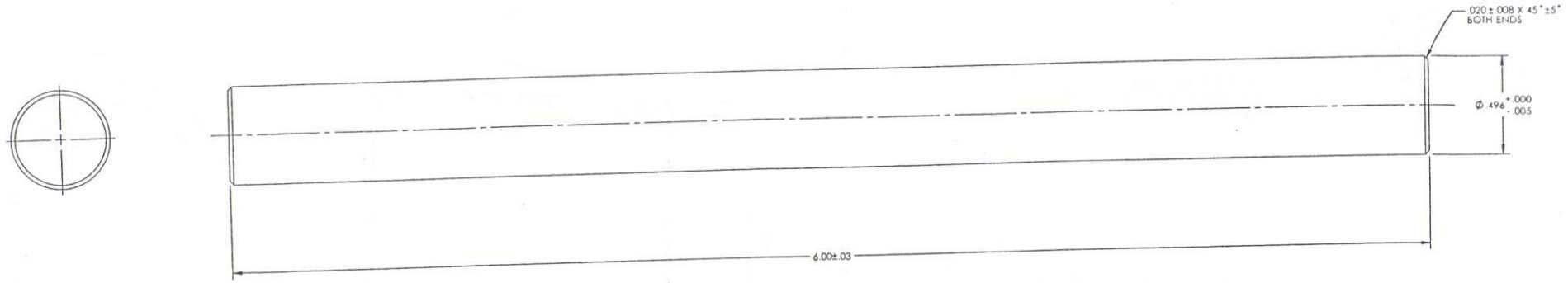

ITEM 4, SPACER POLYETHYLENE
MATERIAL: PURE HIGH DENSITY POLYETHYLENE (CAT# 213)

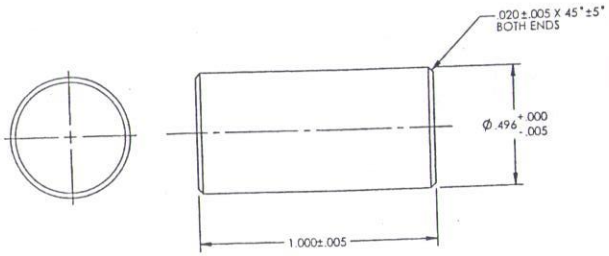

ITEM 5, PLUG, CENTER
MATERIAL: BAR, ZIRCONIUM ALLOY(ZIRCALLOY-4)
PER ASTM B 550/B 550M/97

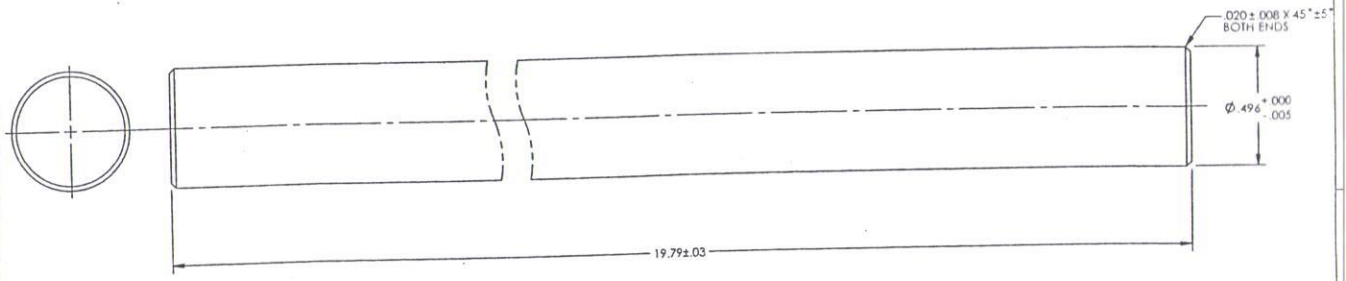

ITEM 6, SPACER POLYETHYLENE
MATERIAL: PURE HIGH DENSITY POLYETHYLENE (CAT# 213)

DRAWING NUMBER R64913			
DRAWING CLASSIFICATION UNCLASSIFIED			
SIZE D	CAGE CODE 14213	SCALE 4:1	
	ISSUE D	SHEET 3 OF 3	
FORM SA-REL-12/03/2001			

6. Grid Plates and Standoffs

Page	Drawing #	Issue	Title
28	R64923	B	Lower Grid Plate, 2.8 Pitch
29	R64924	A	Upper Grid Plate, 2.8 Pitch
31	R64926	B	Lower Grid Plate, 2.0 Pitch
32	R64927	A	Upper Grid Plate, 2.0 Pitch
34	R64929	B	Standoff

NOTES:

1. GENERAL REQUIREMENTS AND DRAWING INTERPRETATION PER 9900000.
2. MATERIAL TO BE: ALUMINUM, 6061-T651 PER ASTM B209, 1.00 THK.
3. CERTIFICATION OF MANUFACTURER'S TEST REPORTS (CMTR'S) REQUIRED.
4. APPROX. WEIGHT: 91 LBS.
5. MAY BE OBTAINED FROM:
   RELIANCE METAL CENTER
   6817 JEFFERSON N.E.
   ALBUQUERQUE, N.M. 87109
6. UNLESS OTHERWISE SPECIFIED, ALL DIMENSIONS ARE IN INCHES, WITH METRIC EQUIVALENT IN BRACKETS.
7. MATCH DRILL FEATURE WITH UPPER GRID PLATE, 2.8 PITCH, DWG: R64924.

DESIGN AGENCY PART NUMBER	REVISION						
	ISSUE	SHEET ZONE	PREPARED BY	DESCRIPTION	DATE	CHKR	APVD
R64923-000	A		K. McBRIDE 2993/ J. FISK,6433/P.HELMICK, 6423		07/14/2001		PHH
	B	B1	D. SAMUEL 2992/ P. H. HELMICK, 6423	ADDED C'BORE & DEPTH TO .570 DIM	2/6/2002		PHH

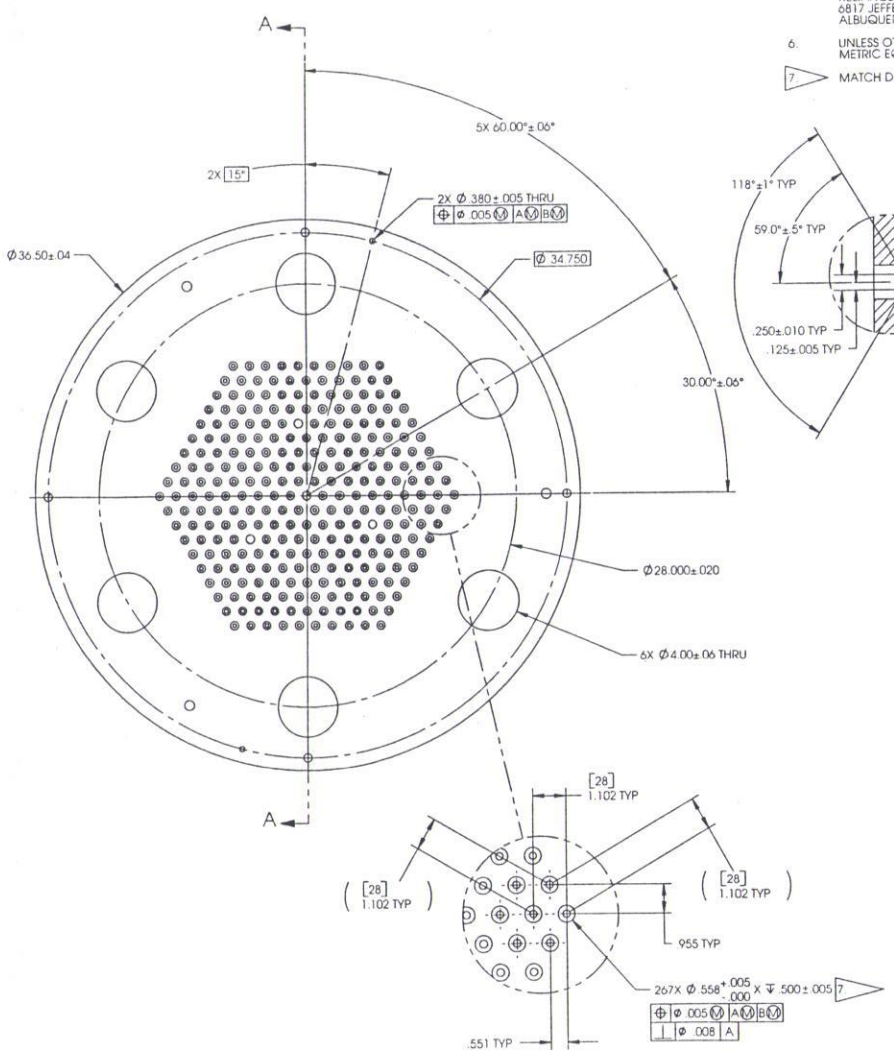

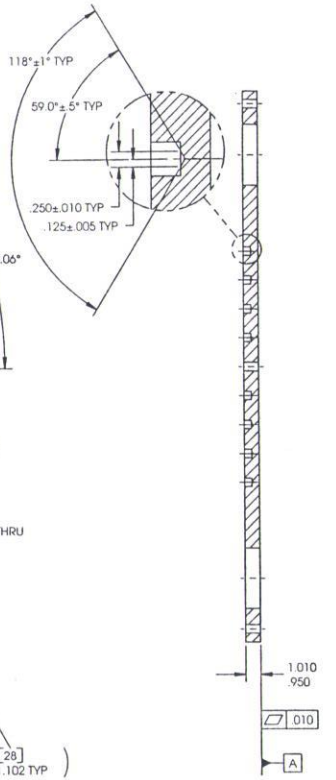

SECTION A-A

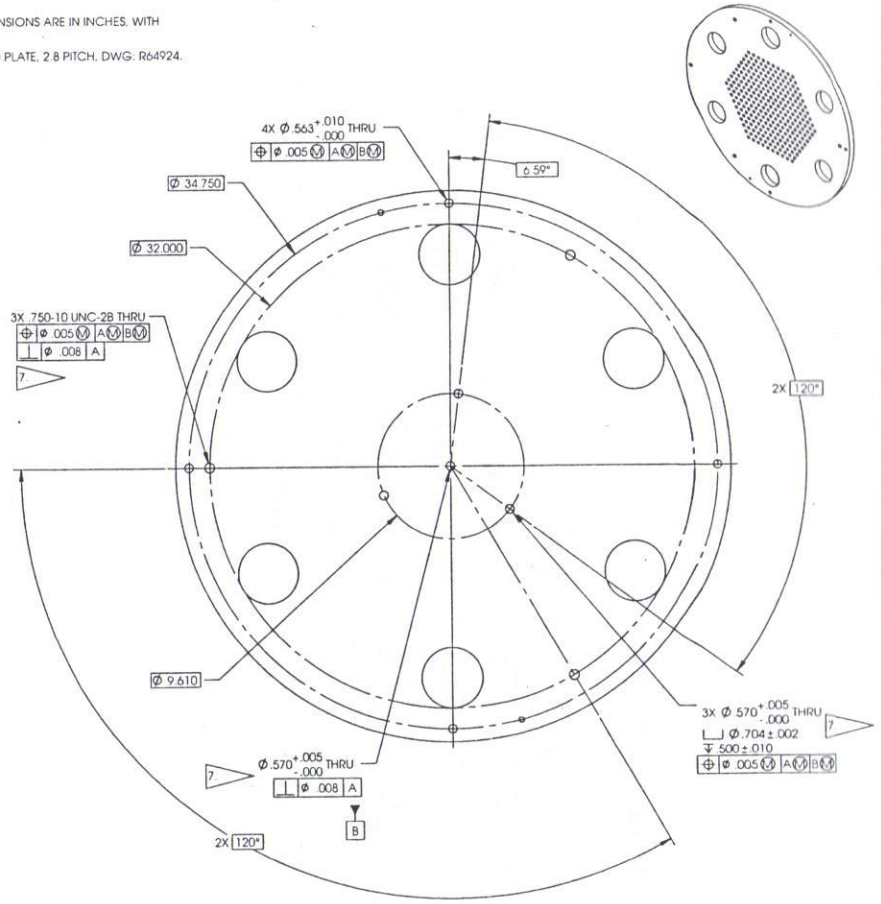

SHEET	1	2	3	4	5	6	TITLE: LOWER GRID PLATE, 2.8 PITCH
ISSUE	B						
PART CLASSIFICATION: UNCLASSIFIED							(BUC)
DRAWING CLASSIFICATION: UNCLASSIFIED							SIZE: D — DRAWING NUMBER: R64923
							CAGE: 14213 — SCALE: 1:4 — SHEET 1 OF 1
STATUS: SA-REL-2/6/2002							ORIGIN: SA-SolidWorks 2001

NOTES:

1. GENERAL REQUIREMENTS AND DRAWING INTERPRETATION PER 9900000.
2. MATERIAL TO BE: ALUMINUM, 6061-T651 PER ASTM B209, 1.00 THK.
3. CERTIFICATION OF MANUFACTURER'S TEST REPORTS (CMTR'S) REQUIRED.
4. APPROX. WEIGHT: 86 LBS.
5. MAY BE OBTAINED FROM:
   RELIANCE METAL CENTER
   6817 JEFFERSON N.E.
   ALBUQUERQUE, N.M. 87109
6. UNLESS OTHERWISE SPECIFIED, ALL DIMENSIONS ARE IN INCHES, WITH METRIC EQUIVALENT IN BRACKETS.
7. MATCH DRILL FEATURE WITH LOWER GRID PLATE, 2.8 PITCH, DWG: R64923.
8. MARK HOLE NUMBERS USING .125 INCH HIGH CHARACTERS, .005-.007 DEEP PER 9919100, CLASS E-1 OR MACHINE MILLED. LOCATE APPROX. AS SHOWN ON SHT2.

DESIGN AGENCY PART NUMBER	REVISION: ISSUE	SHEET ZONE	PREPARED BY	DESCRIPTION	DATE	CHKD	APVD
R64924-000	A		K. McBRIDE, 2993/D. SAMUEL, 2992/ J. FISK, 6433/P. HELMICK, 6423		09/18/2001		PH

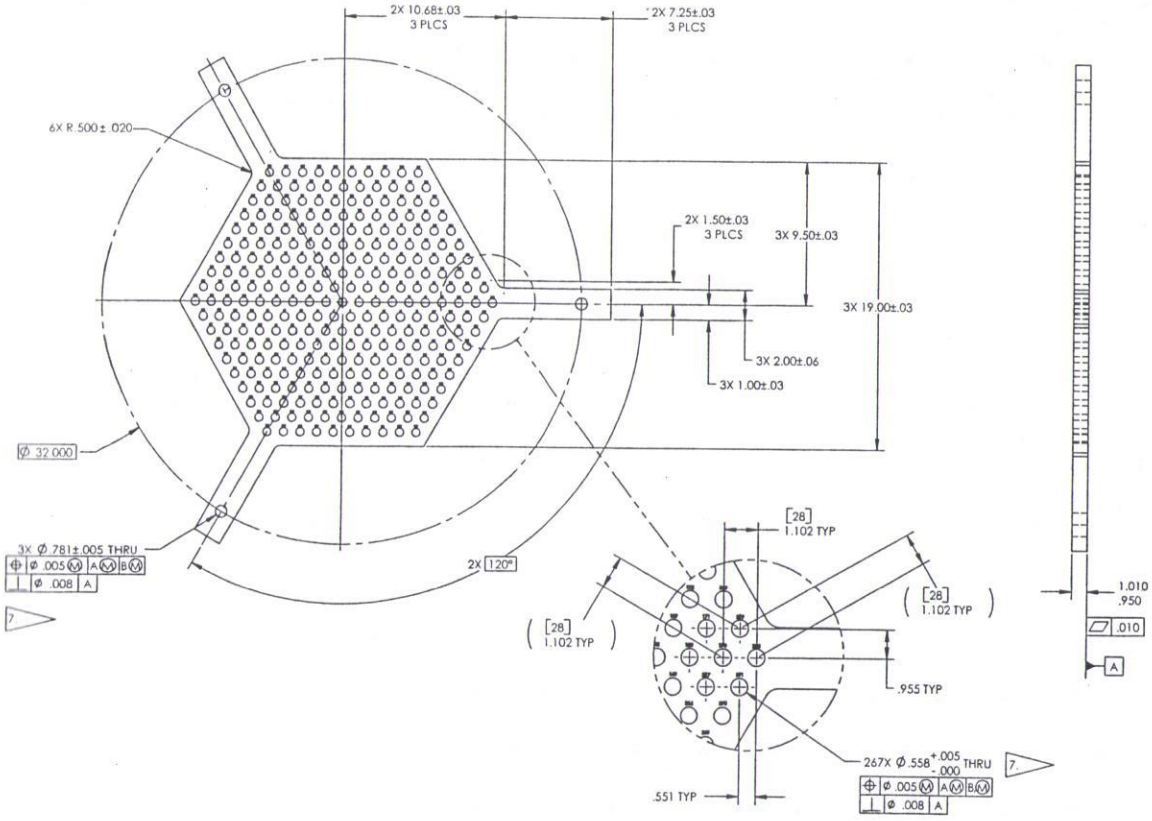

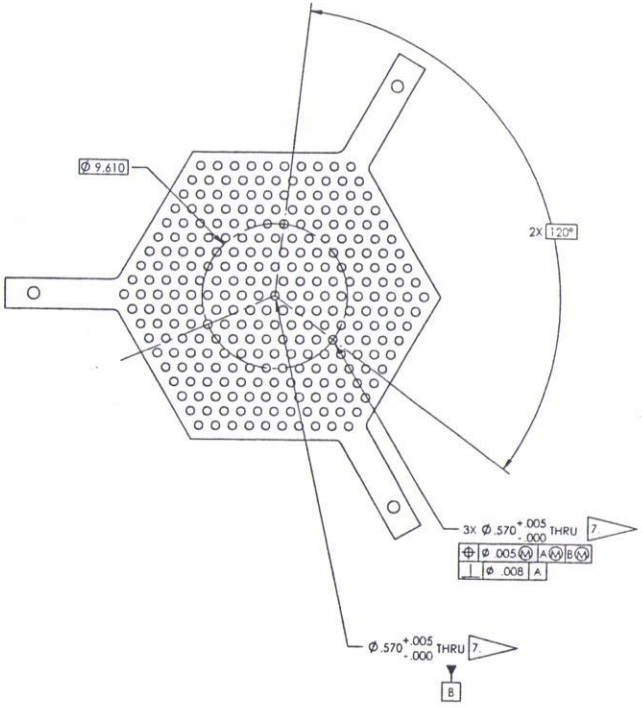

SHEET	1	2	3	4	5	6
ISSUE	A	A				

TITLE: UPPER GRID PLATE, 2.8 PITCH (BUC)

PART CLASSIFICATION: UNCLASSIFIED

DRAWING CLASSIFICATION: UNCLASSIFIED

SIZE: D

DRAWING NUMBER: R64924

CAGE: 14213 SCALE: 1:4 SHEET 1 OF 2

DATE: SA-REL-09/18/2001

ORIGIN: SA-SolidWorks 2001

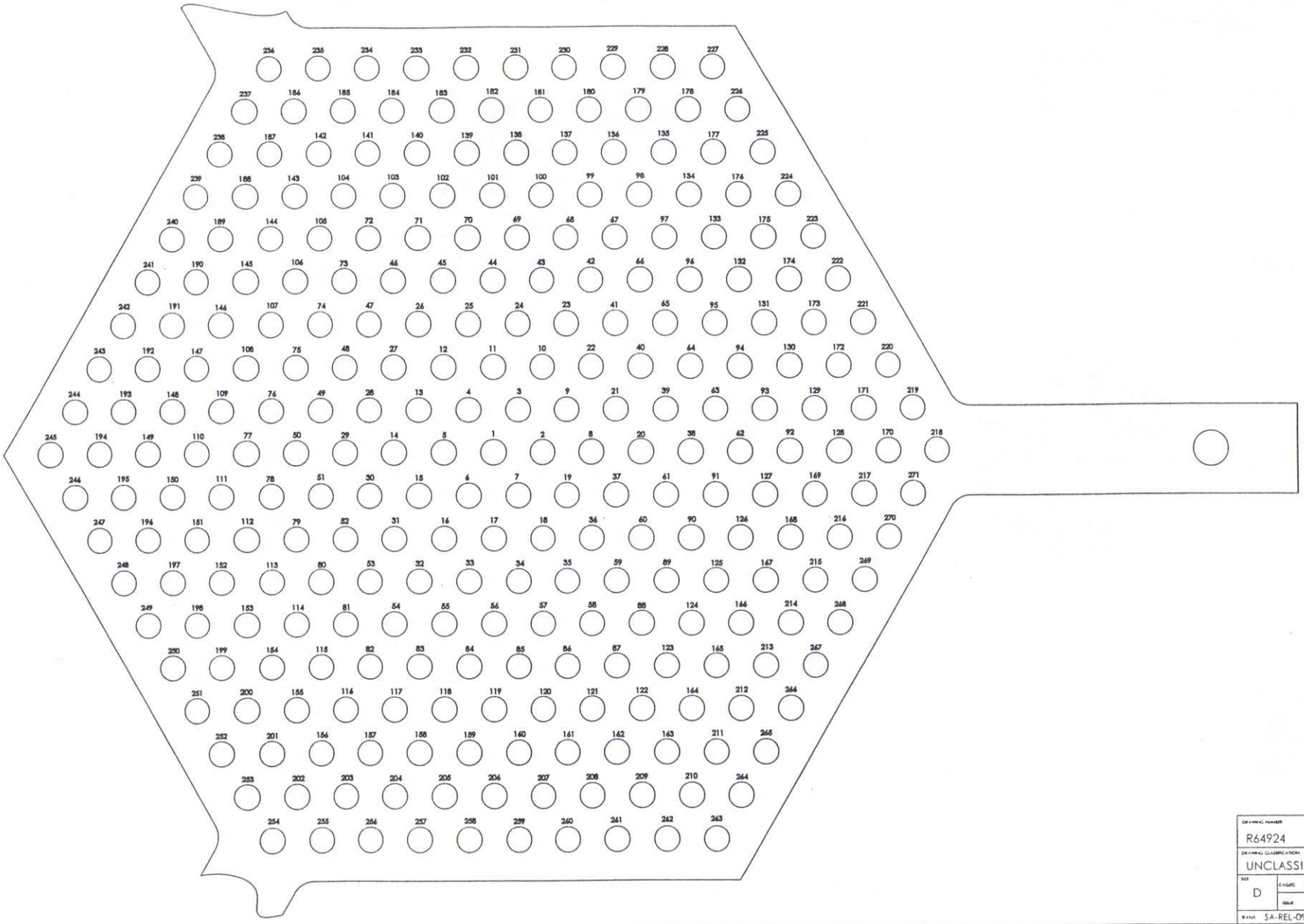

DRAWING NUMBER	R64924		
DRAWING CLASSIFICATION	UNCLASSIFIED		
SIZE D	CAGE CODE 14213	SCALE NONE	
	ISSUE A	SHEET 2 OF 2	
NAME SA-REL-09/18/2001			

NOTES:

1. GENERAL REQUIREMENTS AND DRAWING INTERPRETATION PER 9900000.
2. MATERIAL TO BE: ALUMINUM, 6061-T651 PER ASTM B209, 1.00 THK.
3. CERTIFICATION OF MANUFACTURER'S TEST REPORTS (CMTR'S) REQUIRED.
4. APPROX. WEIGHT: 90 LBS.
5. MAY BE OBTAINED FROM:
   RELIANCE METAL CENTER
   6817 JEFFERSON N.E.
   ALBUQUERQUE, N.M. 87109
6. UNLESS OTHERWISE SPECIFIED, ALL DIMENSIONS ARE IN INCHES, WITH METRIC EQUIVALENT IN BRACKETS.

7. MATCH DRILL FEATURE WITH UPPER GRID PLATE, 2.0 PITCH, DWG: R64927.

DESIGN AGENCY PART NUMBER	REVISION					
	REV	SHEET ZONE	PREPARED BY / DESCRIPTION	DATE	CHKR	APVD
R64926-000	A		K. McBRIDE,2993/ J. FISK, 6433/P HELMICK,6423	07/14/2001		PHH
	B	B1	D. SAMUEL, 2992/ P. H. HELMICK, 6423 ADDED C'BORE & DEPTH TO .570 DIM	2/6/2002		PHH

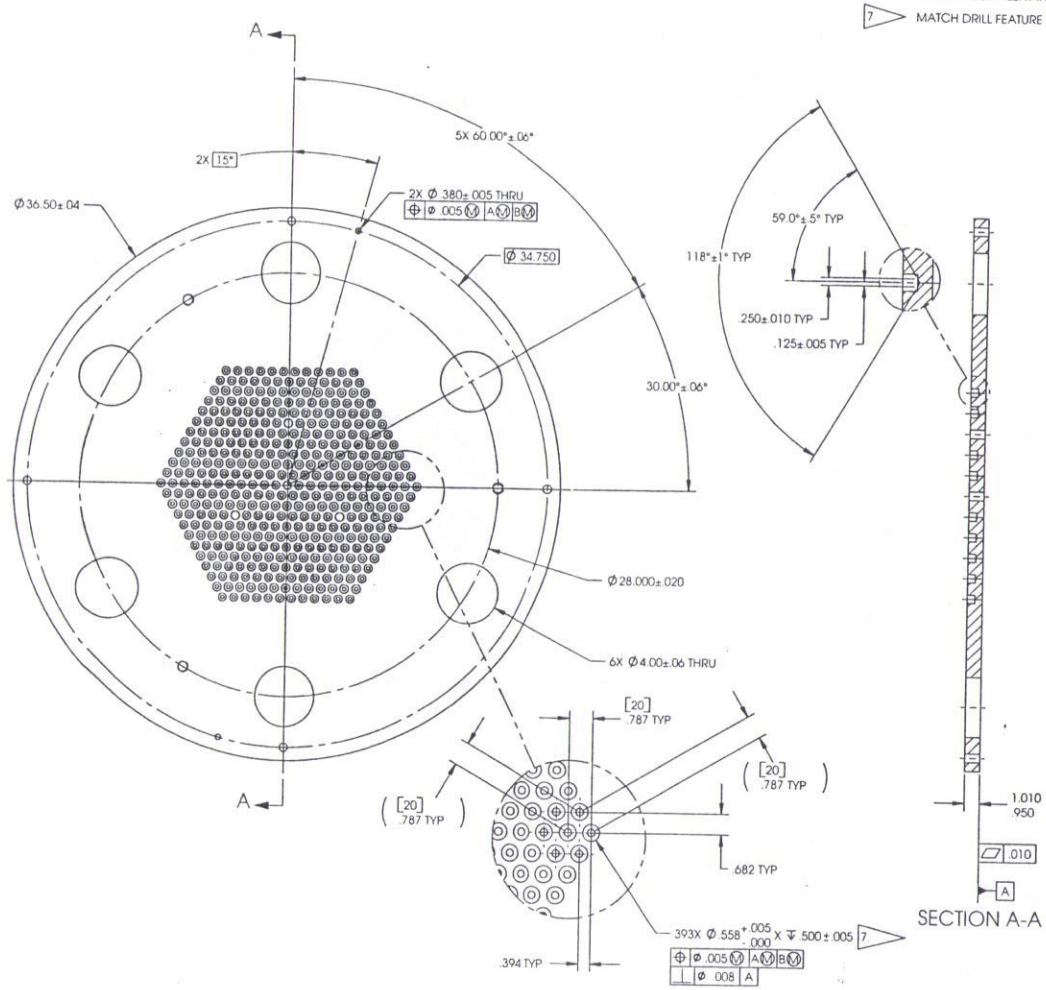

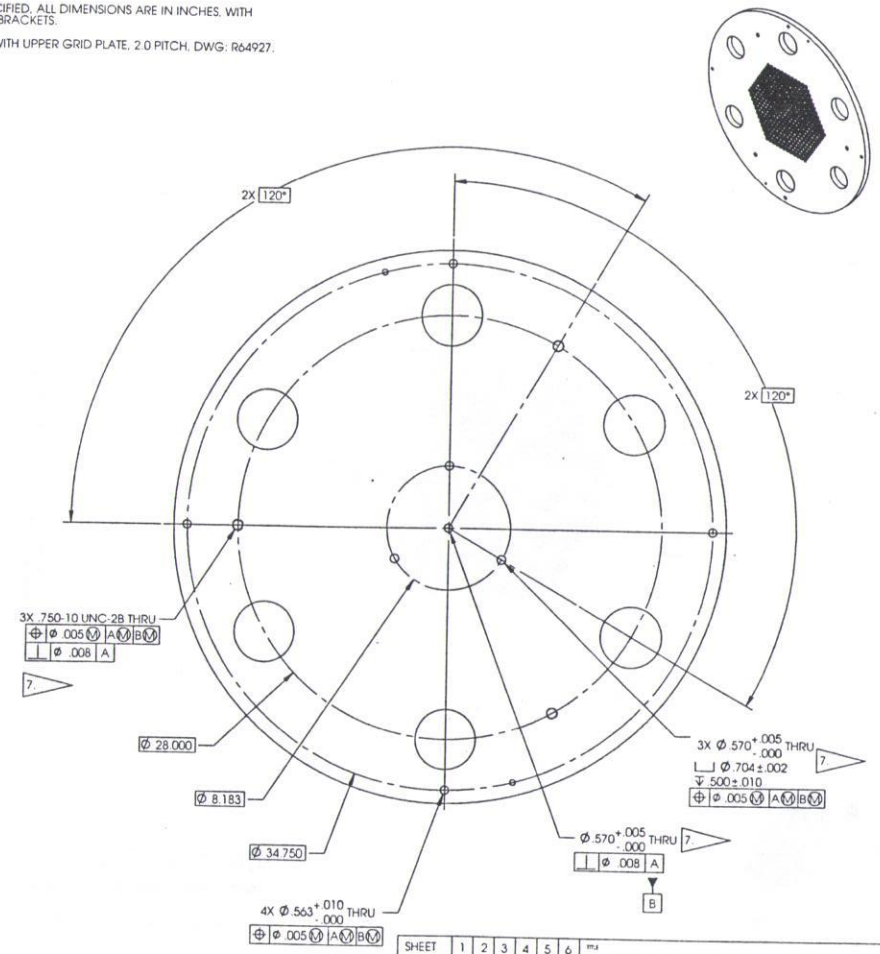

SHEET	1	2	3	4	5	6	TITLE: LOWER GRID PLATE, 2.0 PITCH (BUC)
ISSUE	B						
PART CLASSIFICATION: UNCLASSIFIED							
DRAWING CLASSIFICATION: UNCLASSIFIED							SIZE: D — DRAWING NUMBER: R64926
							CAGE: 14213 — SCALE: 1:4 — SHEET 1 OF 1
STATUS: SA-REL-2/6/2002							ORIGIN: SA-SolidWorks 2001

NOTES:

1. GENERAL REQUIREMENTS AND DRAWING INTERPRETATION PER 9900000.
2. MATERIAL TO BE: ALUMINUM, 6061-T651 PER ASTM B209, 1.00 THK.
3. CERTIFICATION OF MANUFACTURER'S TEST REPORTS (CMTR'S) REQUIRED.
4. APPROX. WEIGHT: 60 LBS.
5. MAY BE OBTAINED FROM:
   RELIANCE METAL CENTER
   6817 JEFFERSON N.E.
   ALBUQUERQUE, N.M. 87109
6. UNLESS OTHERWISE SPECIFIED, ALL DIMENSIONS ARE IN INCHES, WITH METRIC EQUIVALENT IN BRACKETS.
7. MATCH DRILL FEATURE WITH LOWER GRID PLATE, 2.0 PITCH, DWG: R64926.
8. MARK HOLE NUMBERS USING .125 INCH HIGH CHARACTERS, .005-.007 DEEP PER 9919100, CLASS E-1 OR MACHINE MILLED. LOCATE APPROX. AS SHOWN ON SHT 2.

DESIGN AGENCY PART NUMBER	REVISION: ISSUE	SHEET ZONE	PREPARED BY / DESCRIPTION	DATE	CHKD	APVD
R64927-000	A		K. McBRIDE, 2993/D. SAMUEL, 2992/ J. FISK, 6433/P. HELMICK, 6423	09/18/2001		PH

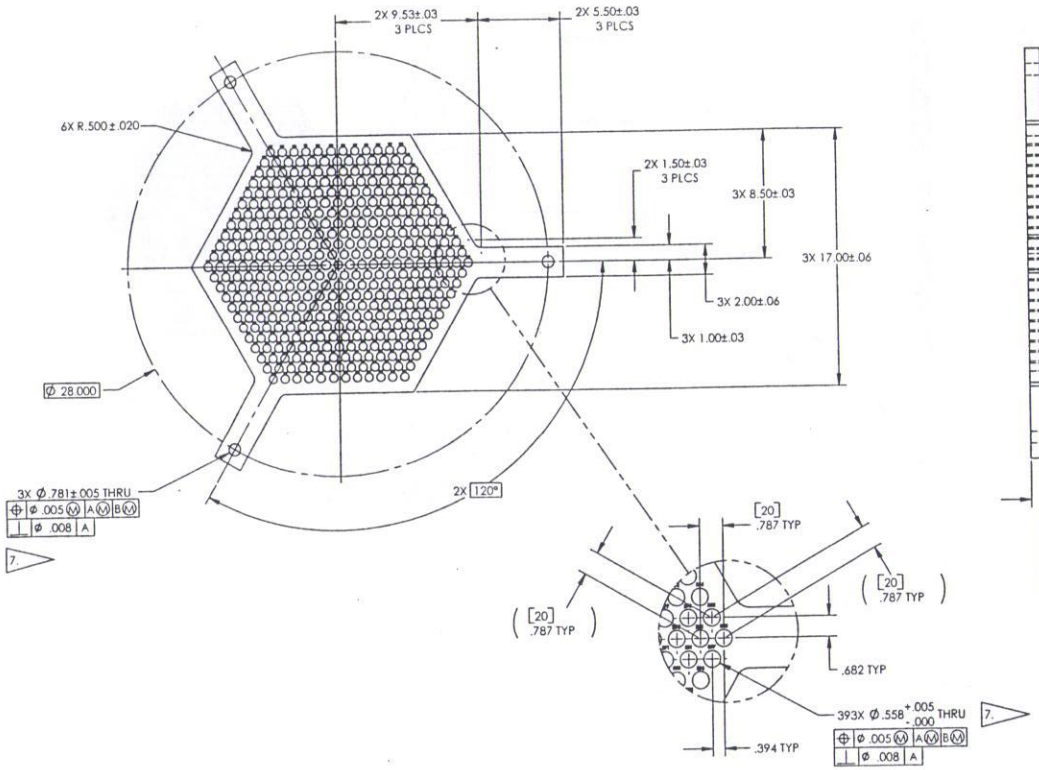

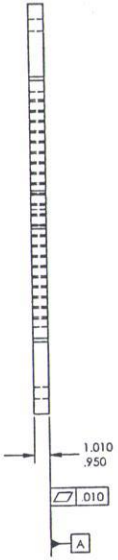

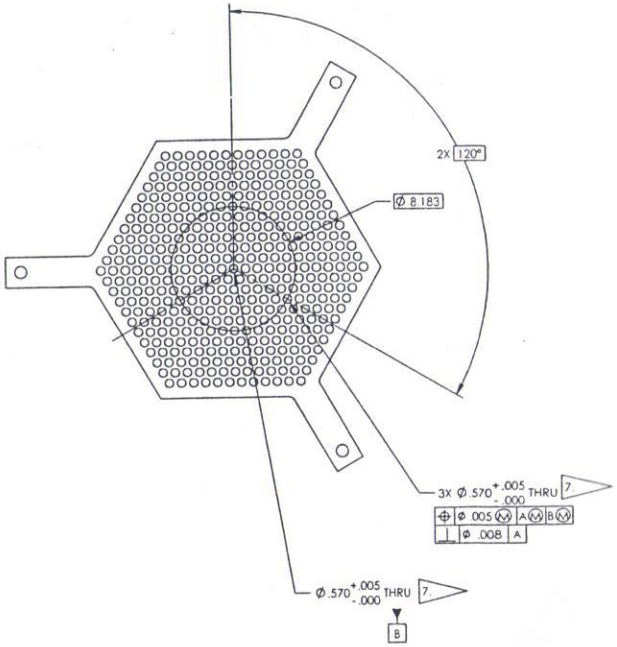

SHEET	1	2	3	4	5	6
ISSUE	A	A				

FILE: UPPER GRID PLATE, 2.0 PITCH (BUC)

PART CLASSIFICATION: UNCLASSIFIED

DRAWING CLASSIFICATION: UNCLASSIFIED

SIZE: D | DRAWING NUMBER: R64927

CAGEC: 14213 | SCALE: 1:4 | SHEET 1 OF 2

DRAWN: SA-REL-09/18/2001 | ORIGIN: SA-SolidWorks 2001

GEOMETRIC PRECISION INC

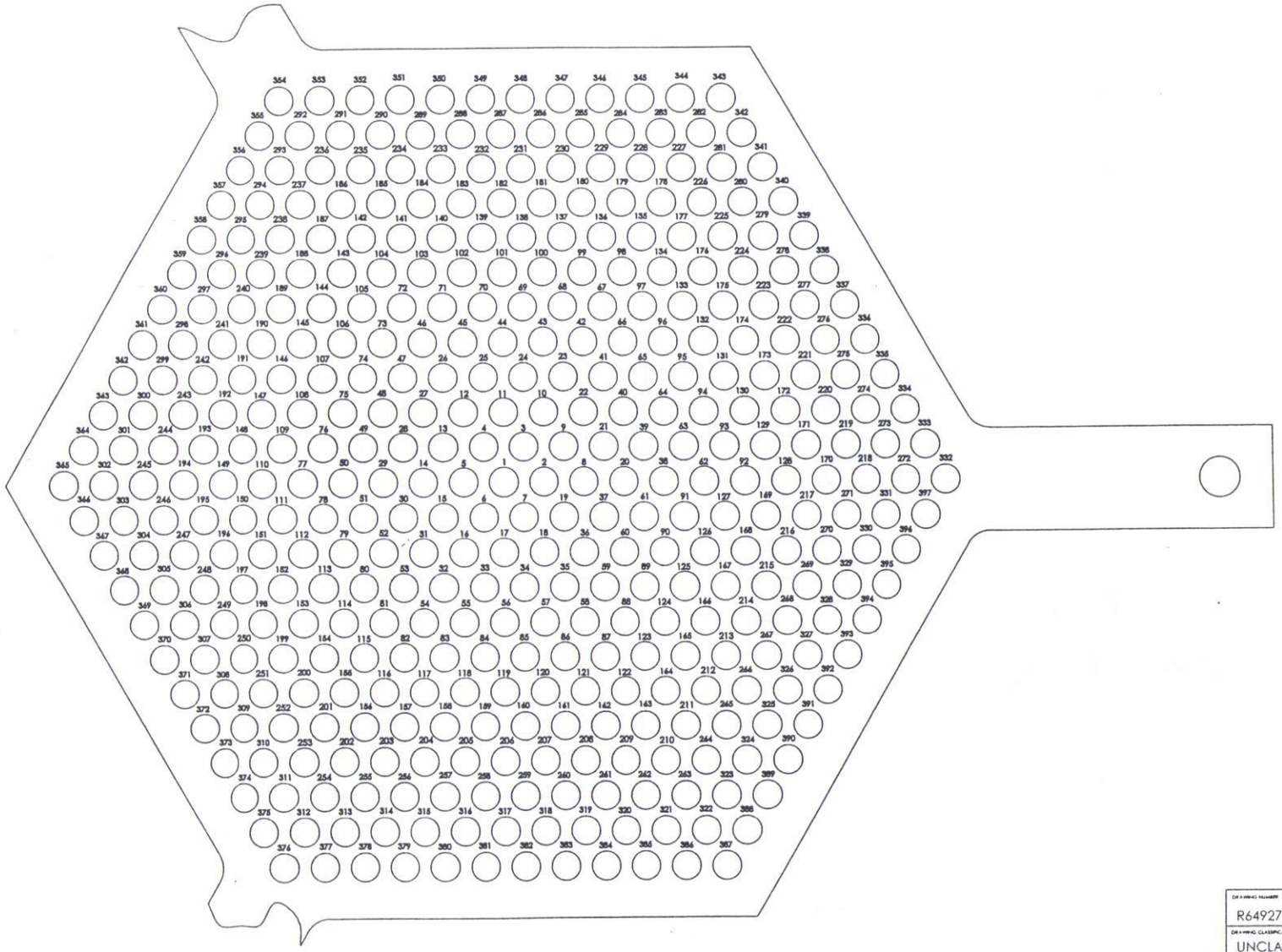

DRAWING NUMBER	R64927		
DRAWING CLASSIFICATION	UNCLASSIFIED		
SIZE D	CAGE 14213	SCALE	NONE
	ISSUE A	SHEET	2 OF 2
STATUS SA-REL-09/18/2001			

NOTES:

1. GENERAL REQUIREMENTS AND DRAWING INTERPRETATION PER 9900000.
2. MATERIAL TO BE ALUMINUM ROD, 6061-T651, 1.00 OD. PER ASTM B221.
3. CERTIFICATION OF MANUFACTURER'S TEST REPORTS (CMTR'S) REQUIRED.
4. APPROX. WEIGHT: 1.7 LBS
5. MAY BE OBTAINED FROM 'RELIANCE METAL CENTER', 6817 JEFFERSON N.E. ALBUQUERQUE, N.M. 87109.

DESIGN AGENCY PART NUMBER	REVISION						
	ISSUE	SHEET ZONE	PREPARED BY	DESCRIPTION	DATE	CHKD	APVD
R64929-000	A		D. SAMUEL.2992/ P. H. HELMICK.6423		03/21/2001		[illegible]
	B		D. SAMUEL. 2992/ P.H. HELMICK. 6423	CHANGE : 19.88 "WAS" 19.69	06/28/2001		

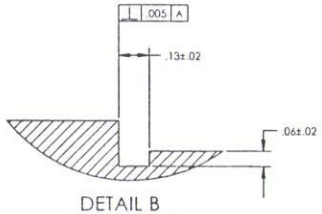

DETAIL B
SCALE 4 : 1
BOTH ENDS

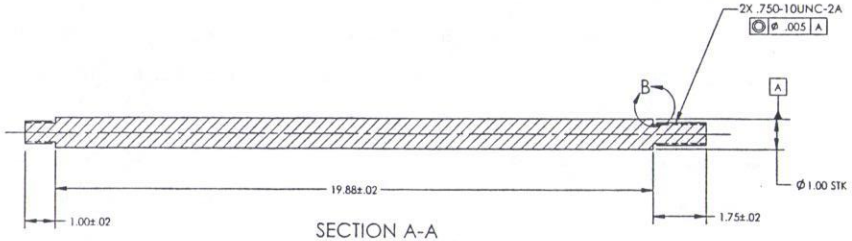

SECTION A-A

SHEET	1	2	3	4	5	6	TITLE STANDOFF
ISSUE	B						
PART CLASSIFICATION UNCLASSIFIED							(BUC)
DRAWING CLASSIFICATION UNCLASSIFIED					SIZE D	DRAWING NUMBER R64929	
					CAGE 14213	SCALE 1:2	SHEET 1 OF 1
MADE SA-REL-06/28/2001					ORIGIN SA-SolidWorks 2001		

7. Assembly Tank

Page	Drawing #	Issue	Title
36	R64919	A	Base Tank
40	R64920	A	Tank
43	R64921	A	Support Ring, Grid

NOTES:

1. GENERAL REQUIREMENTS AND DRAWING INTERPRETATION PER 9900000.
2. MATERIAL TO BE ALUMINUM, 6061-T6
3. CERTIFICATION OF MANUFACTURER'S TEST REPORTS (CMTR'S) REQUIRED.
4. APPROX. WEIGHT: 141 LBS
5. MAY BE OBTAINED FROM 'RELIANCE METAL CENTER', 6817 JEFFERSON N.E. ALBUQUERQUE, N.M. 87109.
6. ORIENT HOLES AS SHOWN.
7. WELD AND INSPECT PER 9912117, CLASS II, USING ER4043 ELECTRODES OR RODS PER AWS A5.10-92. 100% PENETRANT INSPECTION.
8. ASSEMBLED HEIGHT AFTER WELDMENT, MANUFACTURING HEIGHT ALLOWANCE TO BE APPLIED TO ITEM #4.

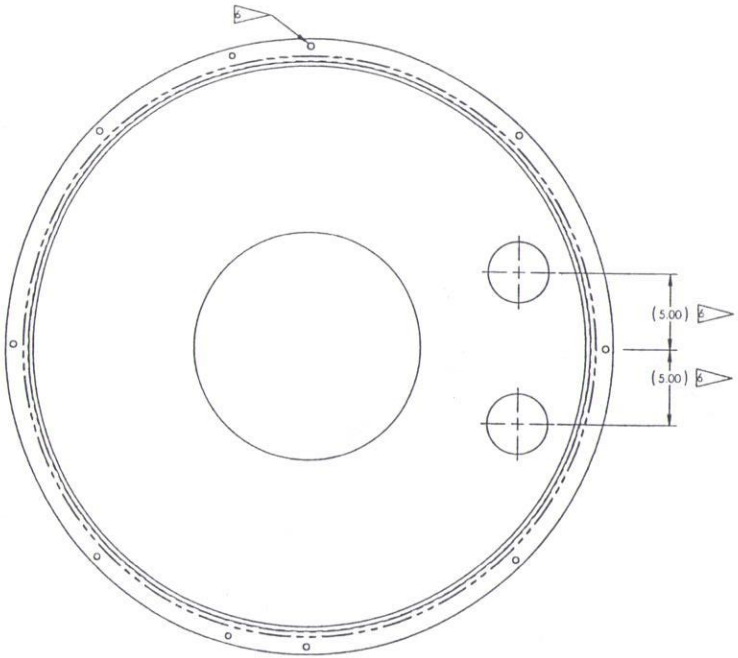

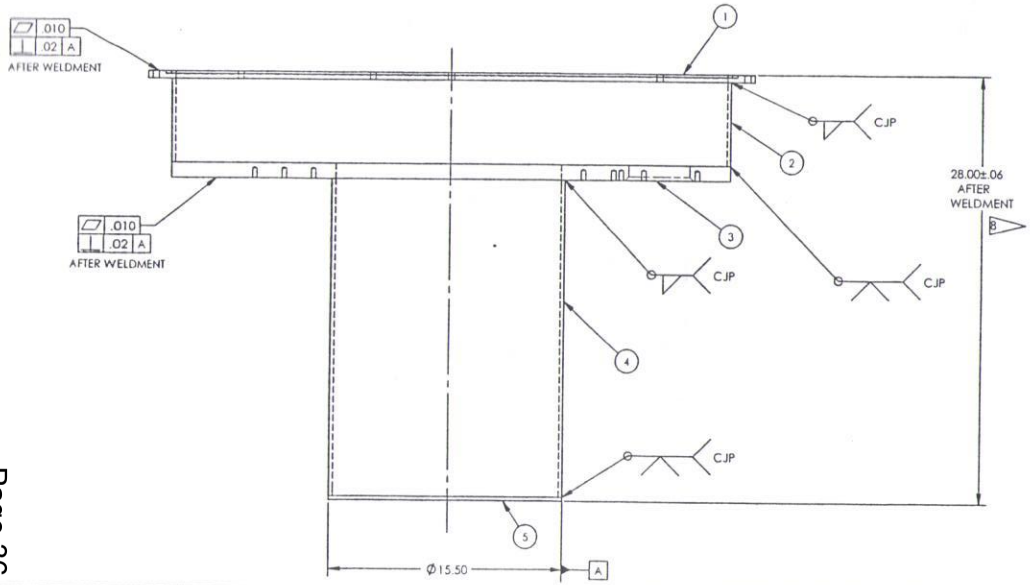

DESIGN AGENCY PART NUMBER	REVISION: ISSUE	SHEET ZONE	PREPARED BY	DESCRIPTION	DATE	CHKD	APVD
R64919-000	A		D. SAMUEL, 2992/ P. H. HELMICK, 6523		03/21/2001		PHH

QTY	PART NO.	DESCRIPTION	NOTE	ZONE	ITEM
1	R64919-500	LOWER FLOOR, BASE TANK			5
1	R64919-400	LOWER WALL, BASE TANK			4
1	R64919-300	UPPER FLOOR, BASE TANK			3
1	R64919-200	UPPER WALL, BASE TANK			2
1	R64919-100	UPPER FLANGE , BASE TANK			1
NA	9912117	WELDING, ALUMINUM ALLOYS			
NA	9919100	MARKING, GENERAL METHODS			
NA	9900000	GENERAL REQUIREMENTS AND DRAWING INTERPRETATION			

ALT-ALTERNATE AR-AS REQ'D ARS-AS REQ'D PER ASSY EM-EXPENSE MATERIAL NA-DOCUMENT PM-PROCESS MATERIAL

SHEET	1	2	3	4	5	6
ISSUE	A	A	A	A		

TITLE: BASE TANK (BUC)

PART CLASSIFICATION: UNCLASSIFIED

DRAWING CLASSIFICATION: UNCLASSIFIED

SIZE: D DRAWING NUMBER: R64919

CAGE: 14213 SCALE: 1:4 SHEET 1 OF 4

STATUS: SA-REL-03/21/2001 ORIGIN: SolidWorks 2000

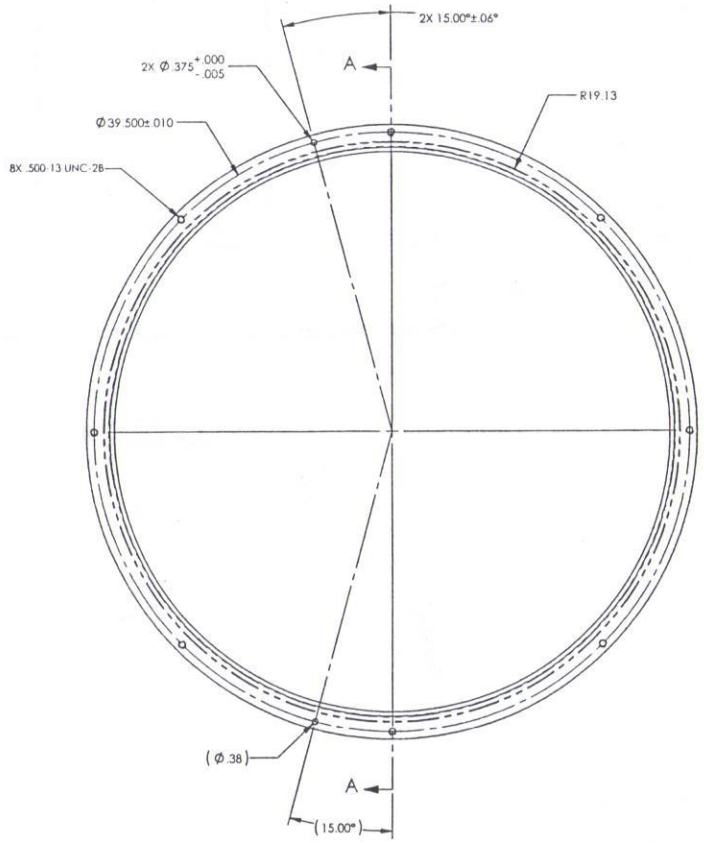

ITEM 1
R64919-100
UPPER FLANGE, BASE TANK
MATERIAL: ALUMINUM, 6061-T6, .500 THK
PER ASTM B209

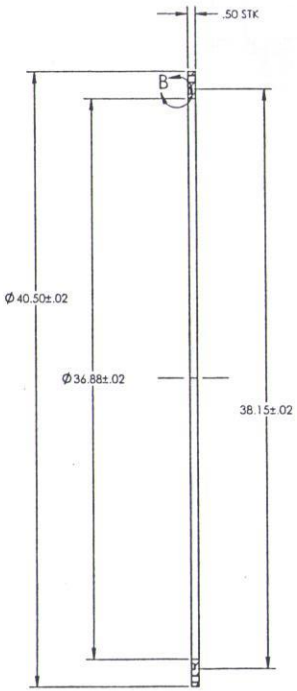

SECTION A-A

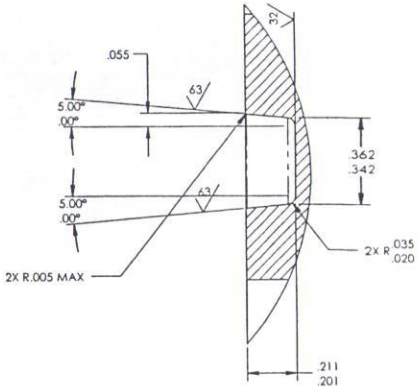

DETAIL B
SCALE 4 : 1

DRAWING NUMBER R64919			
DRAWING CLASSIFICATION UNCLASSIFIED			
SIZE D	CAGE CODE 14213	SCALE 1:4	
	ISSUE A	SHEET 2 OF 4	
BASIS SA-REL-03/21/2001			

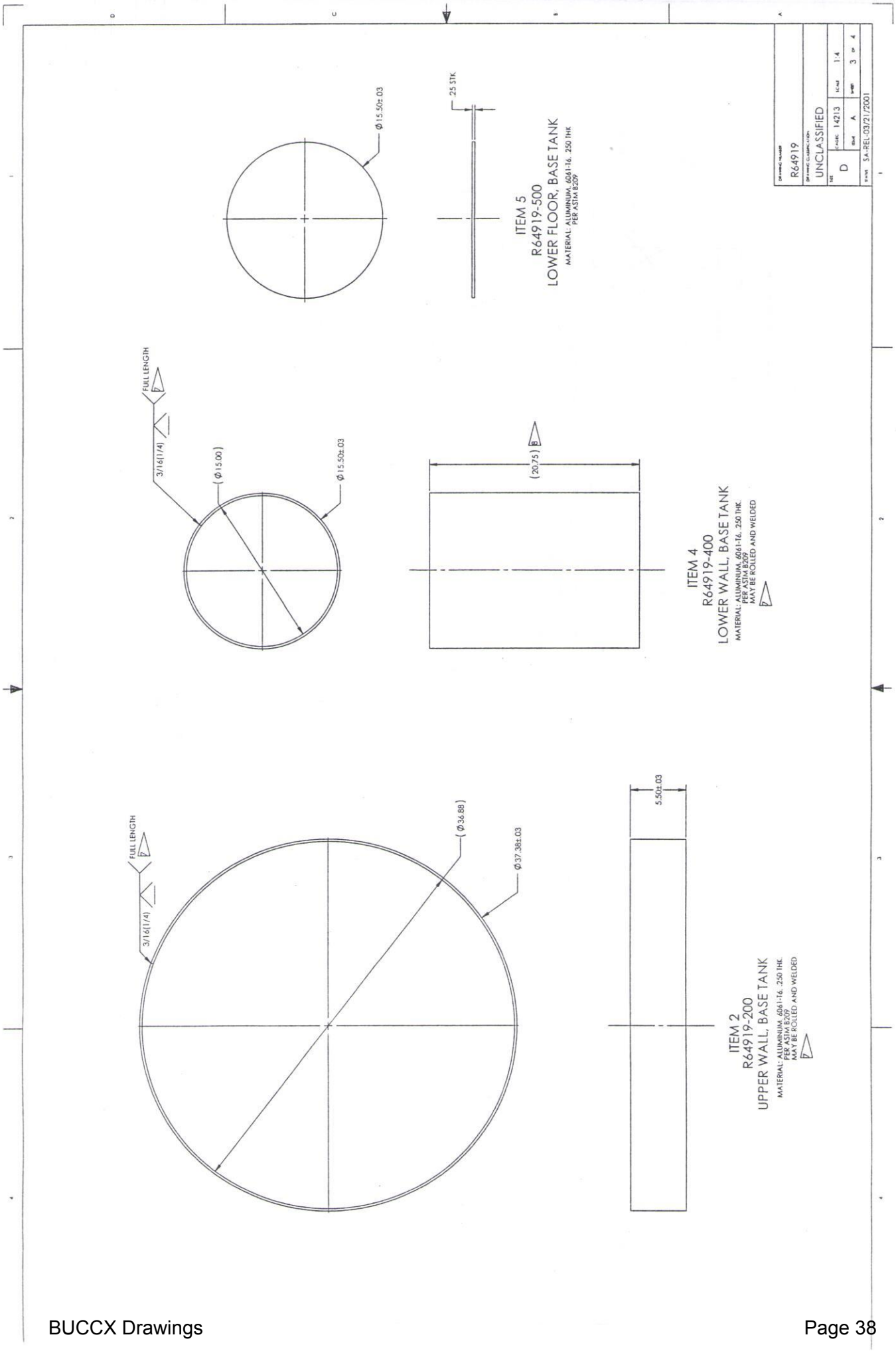
Ø15.50±.03
.25 STK
ITEM 5
R64919-500
LOWER FLOOR, BASE TANK
MATERIAL: ALUMINUM, 6061-T6, .250 THK
PER ASTM B209
FULL LENGTH
3/16(1/4)
(Ø15.00)
Ø15.50±.03
(20.75)
ITEM 4
R64919-400
LOWER WALL, BASE TANK
MATERIAL: ALUMINUM, 6061-T6, .250 THK.
PER ASTM B209
MAY BE ROLLED AND WELDED
FULL LENGTH
3/16(1/4)
(Ø36.88)
Ø37.38±.03
5.50±.03
ITEM 2
R64919-200
UPPER WALL, BASE TANK
MATERIAL: ALUMINUM, 6061-T6, .250 THK.
PER ASTM B209
MAY BE ROLLED AND WELDED
R64919
UNCLASSIFIED
D
14213
A
1:4
3 OF 4
SA-PEL-03/21/2001

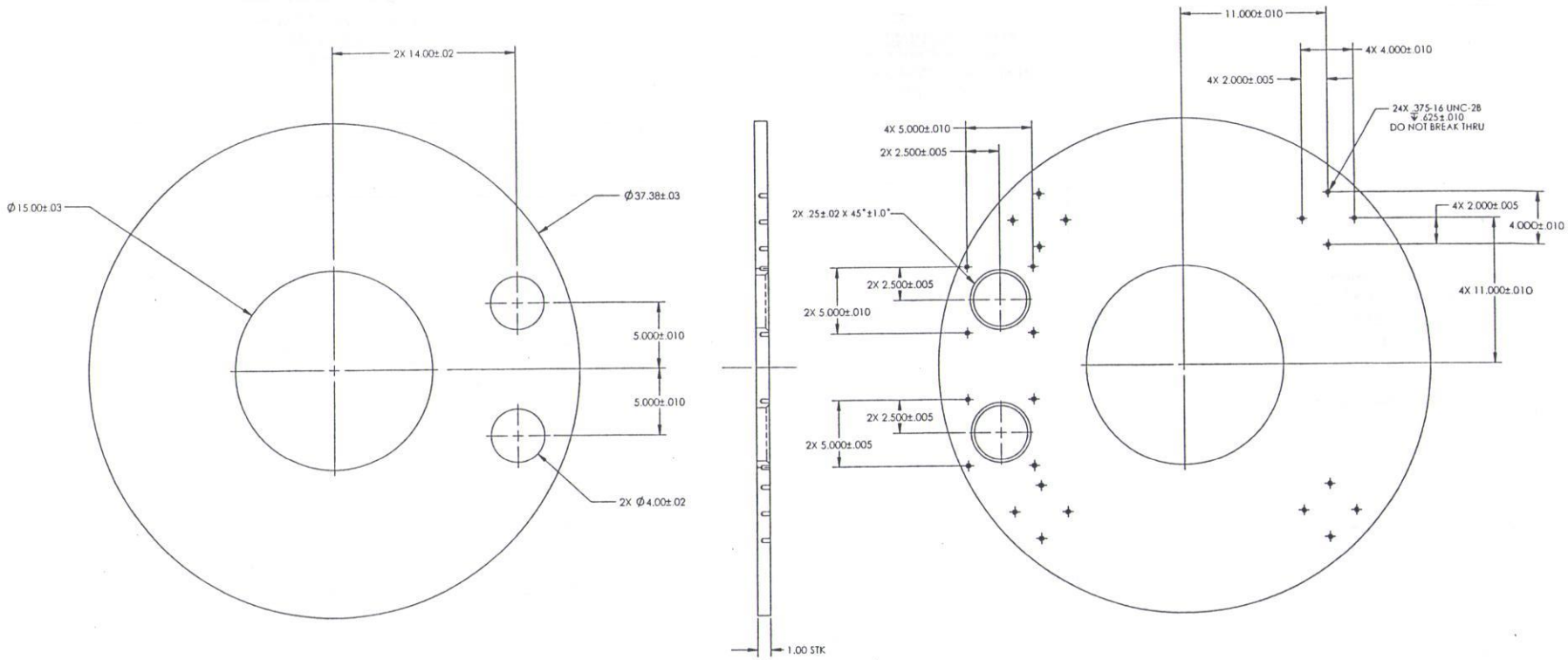

ITEM 3
R64919-300
UPPER FLOOR, BASE TANK
MATERIAL: ALUMINUM, 6061-T6, 1.00 THK
PER ASTM B209

DRAWING NUMBER	R64919		
DRAWING CLASSIFICATION	UNCLASSIFIED		
SIZE D	CAGE CODE 14213	SCALE 1:4	
	ISSUE A	SHEET 4 OF 4	
STATUS SA-REL-03/21/2001			

NOTES:

1. GENERAL REQUIREMENTS AND DRAWING INTERPRETATION PER 9900000.
2. MATERIAL TO BE ALUMINUM, 6061-T6
3. CERTIFICATION OF MANUFACTURER'S TEST REPORTS (CMTR'S) REQUIRED.
4. APPROX. WEIGHT: 112 LBS
5. MAY BE OBTAINED FROM 'RELIANCE METAL CENTER', 6817 JEFFERSON N.E. ALBUQUERQUE, N.M. 87109.
6. ORIENT HOLES AS SHOWN.
7. WELD AND INSPECT PER 9912117, CLASS II, USING ER4043 ELECTRODES OR RODS PER AWS A5.10-92. 100% PENETRANT INSPECTION.
8. ASSEMBLED HEIGHT AFTER WELDMENT, MANUFACTURING HEIGHT ALLOWANCE TO BE APPLIED TO ITEM #2.

DESIGN AGENCY PART NUMBER	REVISION: ISSUE	SHEET ZONE	PREPARED BY	DESCRIPTION	DATE	CHKD	APVD
R64920-000	A		D. SAMUEL, 2992/ P. H. HELMICK, 6523		03/21/2001		PHH

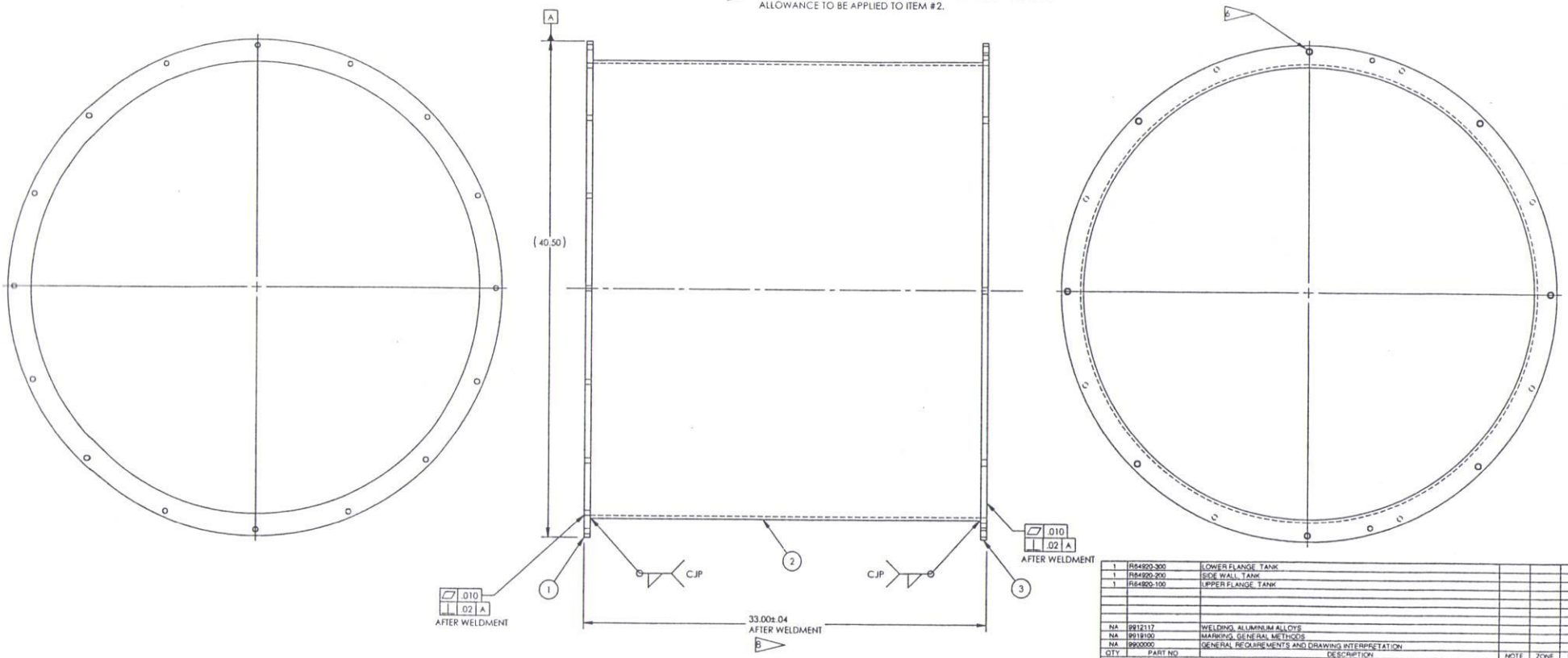

QTY	PART NO	DESCRIPTION	NOTE	ZONE	ITEM
1	R64920-300	LOWER FLANGE, TANK			3
1	R64920-200	SIDE WALL, TANK			2
1	R64920-100	UPPER FLANGE, TANK			1
NA	9912117	WELDING, ALUMINUM ALLOYS			
NA	9919100	MARKING, GENERAL METHODS			
NA	9900000	GENERAL REQUIREMENTS AND DRAWING INTERPRETATION			

ALT-ALTERNATE AR-AS REQ'D ARS-AS REQ'D PER ASSY EM-EXPENSE MATERIAL NA-DOCUMENT PM-PROCESS MATERIAL

SHEET	1	2	3	4	5	6
ISSUE	A	A	A			

TITLE: TANK (BUC)

PART CLASSIFICATION: UNCLASSIFIED

DRAWING CLASSIFICATION: UNCLASSIFIED

SIZE: D DRAWING NUMBER: R64920

CAGE: 14213 SCALE: 1:4 SHEET 1 OF 3

MADE: SA-REL-03/21/2001 ORIGIN: SA-SolidWorks 2001

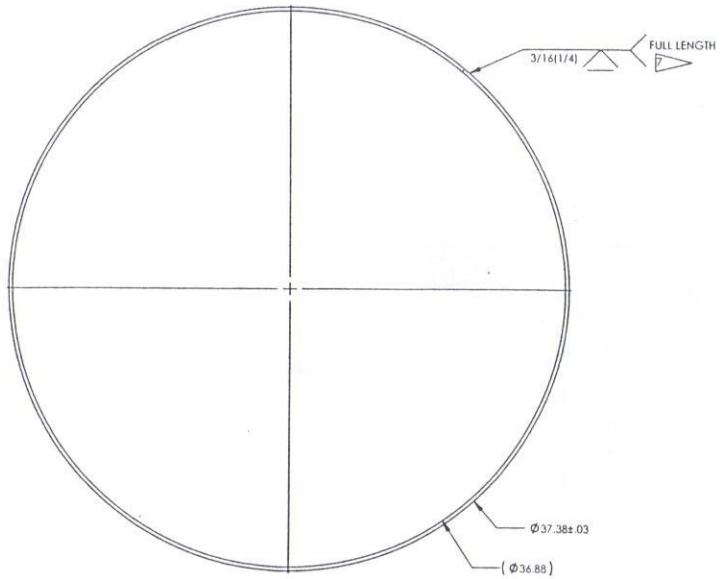

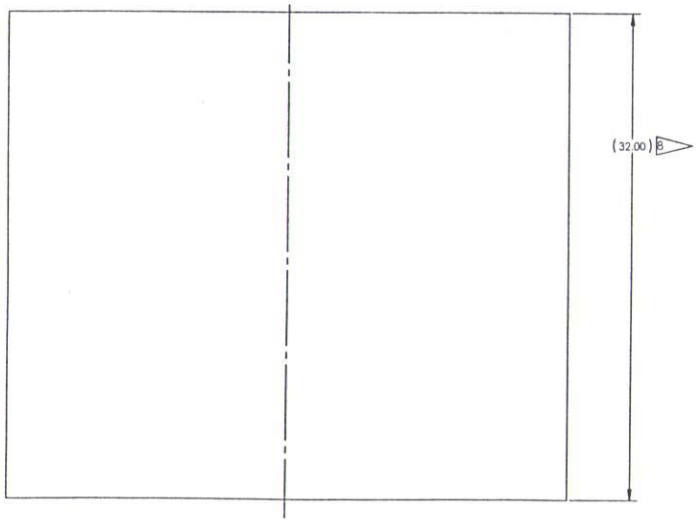

ITEM 2
R64920-200
SIDE WALL, TANK
MATERIAL: ALUMINUM, 6061-T6, .250 THK.
PER ASTM B209
MAY BE ROLLED AND WELDED 7

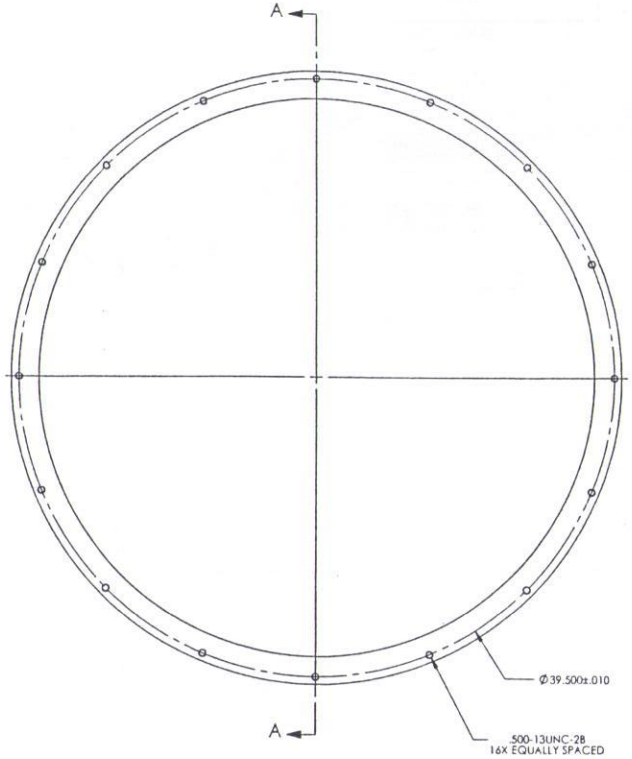

ITEM 1
R64920-100
UPPER FLANGE, TANK
MATERIAL: ALUMINUM, 6061-T6, .500 THK
PER ASTM B209

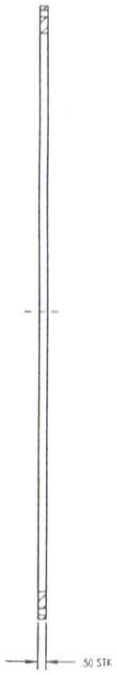

SECTION A-A

DRAWING NUMBER	R64920		
DRAWING CLASSIFICATION	UNCLASSIFIED		
SIZE D	CAGE CODE 14213	SCALE 1:4	
	ISSUE A	SHEET 2 OF 3	
STATUS SA-REL-03/21/2001			

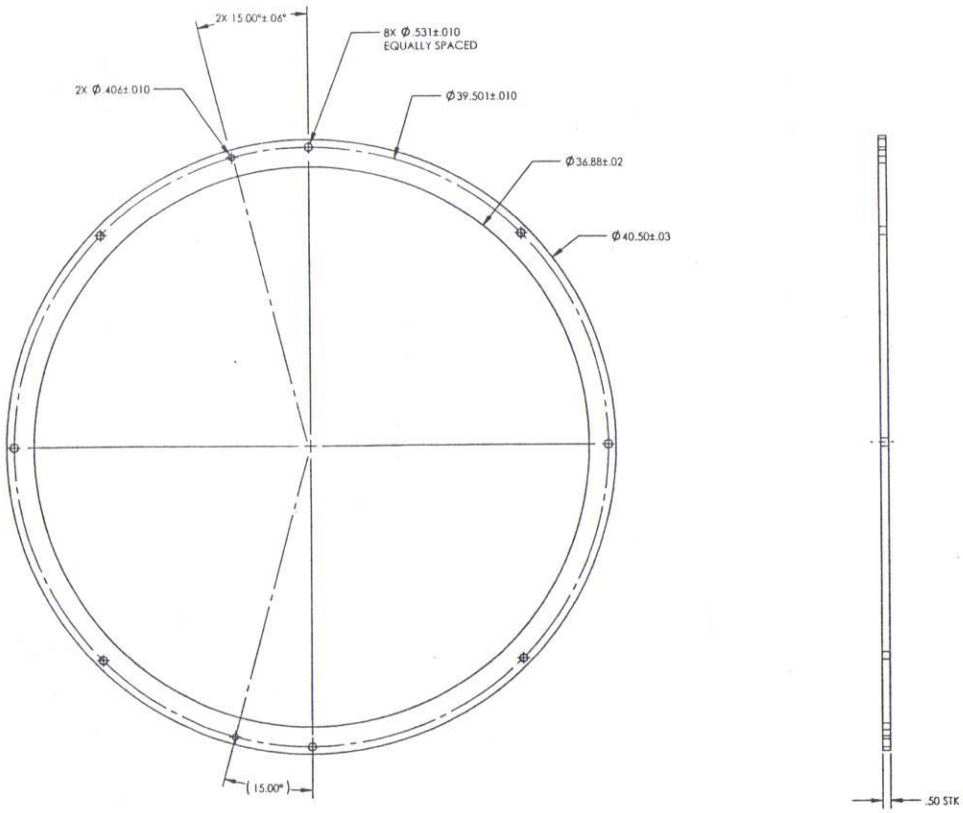

ITEM 3
R64920-300
LOWER FLANGE, TANK

MATERIAL: ALUMINUM, 6061-T6, .500 THK
PER ASTM B209

DRAWING NUMBER	R64920		
DRAWING CLASSIFICATION	UNCLASSIFIED		
SIZE D	CAGE 14213	SCALE 1:4	
	ISSUE A	SHEET 3 OF 3	
STATUS SA-REL-03/21/2001			

NOTES:

1. GENERAL REQUIREMENTS AND DRAWING INTERPRETATION PER 9900000.
2. MATERIAL TO BE ALUMINUM, 6061-T651, PER ASTM B209, 1.00 THK.
3. CERTIFICATION OF MANUFACTURER'S TEST REPORTS (CMTR'S) REQUIRED.
4. APPROX. WEIGHT: 29 LBS
5. MAY BE OBTAINED FROM 'RELIANCE METAL CENTER', 6817 JEFFERSON N.E. ALBUQUERQUE, N.M. 87109.

DESIGN AGENCY PART NUMBER	REVISION ISSUE	SHEET ZONE	PREPARED BY	DESCRIPTION	DATE	CHKD	APVD
R64921-000	A		D. SAMUEL, 2992/ P.H. HELMICK, 6423		03/21/2001		PHH

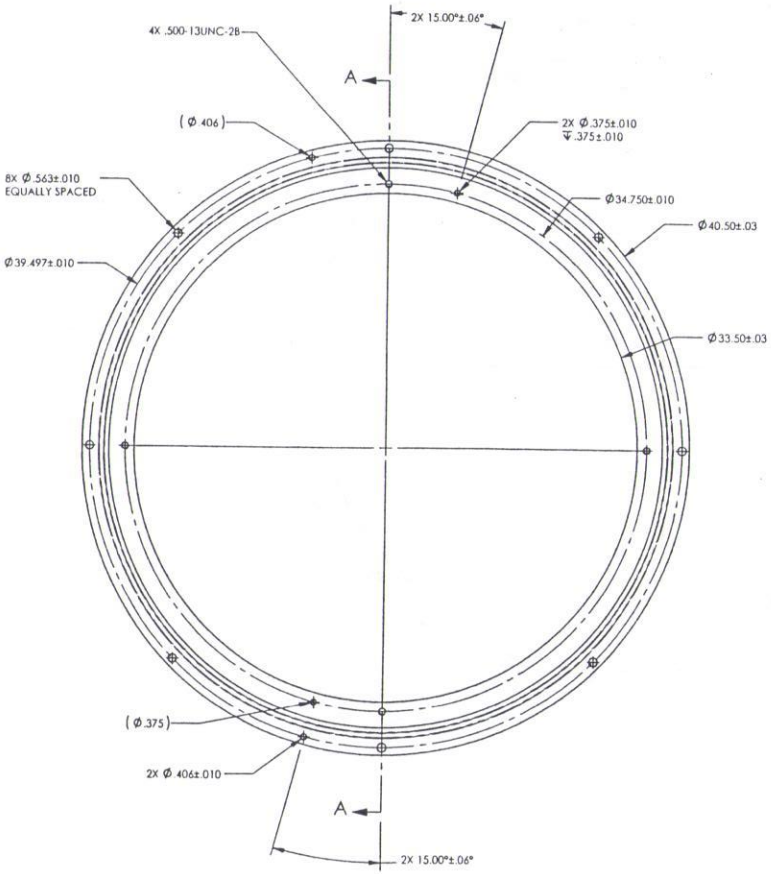

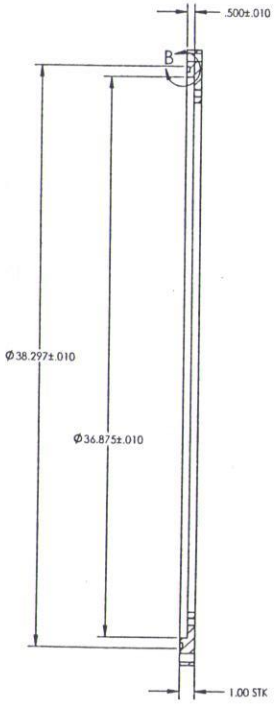

SECTION A-A

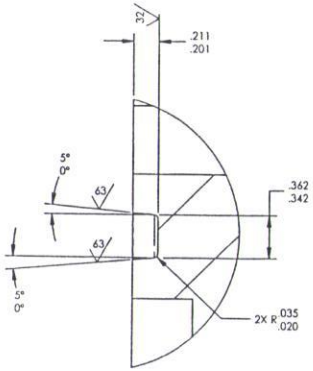

DETAIL B
SCALE 2 : 1

SHEET	1	2	3	4	5	6
ISSUE	A					

TITLE: SUPPORT RING, GRID (BUC)

PART CLASSIFICATION: UNCLASSIFIED

DRAWING CLASSIFICATION: UNCLASSIFIED

REV: D

DRAWING NUMBER: R64921

CAGE: 14213 SCALE: 1:4 SHEET 1 OF 1

STATUS: SA-REL-03/21/2001

ORIGIN: SA-SolidWorks 2001

GEOMETRIC PRECISION INC.

8. Drive Support

Page	Drawing #	Issue	Title
45	R64925	B	Drive Support
46	R64905	A	Drive Mounting Plate Spacer
47	R64906	A	Spacer, Support Leg
48	R64922	A	Mid Support Brace
50	R64928	B	Control Rod Drive Extension
52	R64930	B	Cart Base Transfer Plate
53	R64931	A	Drive Mounting Plate, 2.0 Pitch
54	R64938	A	Drive Mounting Plate, 2.8 Pitch
55	R64932	A	Gusset
56	R64933	A	Drive Frame
61	R64934	B	Main Frame, Low
65	R64935	A	Main Arm
66	R64936	A	Main Arm Spacer, Upper
67	R64937	A	Main Arm Spacer, Lower
68	R64939	A	Support Leg, Drive Support
70	R64940	A	Pivot Block, Drive Support
71	R64941	A	Gusset Stop Plate
72	R64942	A	Support Block
73	R64943	A	Stop Block

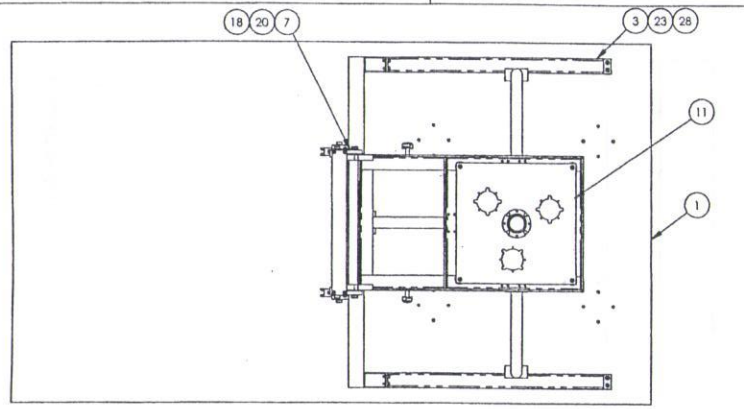

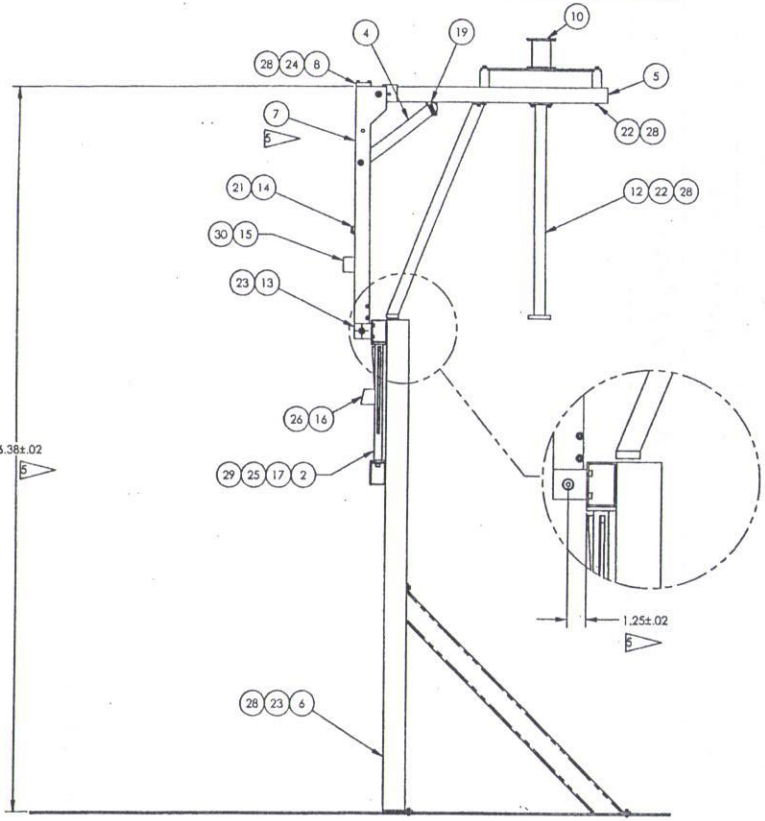

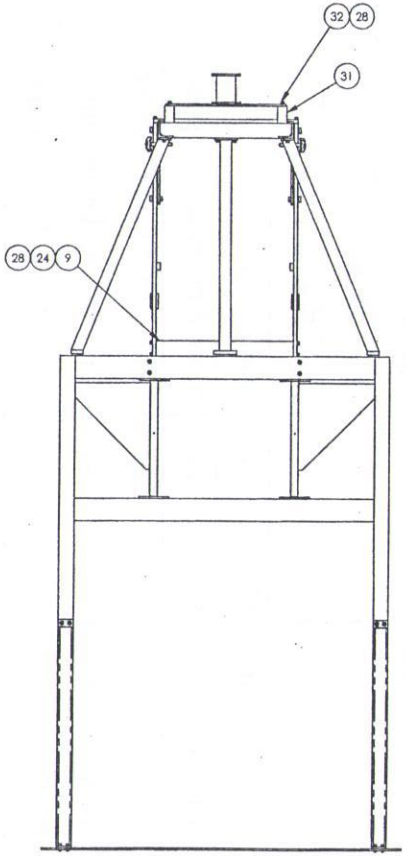

NOTES:

1. GENERAL REQUIREMENTS AND DRAWING INTERPRETATION PER 9900000.
2. APPROX. WEIGHT: 182 LBS.
3. MAY BE OBTAINED FROM "McMASTER-CARR SUPPLY COMPANY". P.O. BOX 54960, LOS ANGELES, CA 90054-0960.
4. MAY BE OBTAINED FROM "BOSTON GEAR", 14 HAYWARD STREET, QUINCY, MA. 02171.
5. THIS DIMENSION OBTAINED BY MATCH DRILLING AND TAPPING ITEM 7 AT ASSEMBLY.

DESIGN AGENCY PART NUMBER: R64925-000

REVISION

ISSUE	SHEET ZONE	PREPARED BY	DESCRIPTION	DATE	CHKR	APVD
A		D. SAMUEL, 2992/ P. H. HELMICK, 6523		05/01/2001		PHH
B		D. SAMUEL, 2992/ P. H. HELMICK, 6523	ADDED SPACERS (ITEM 31) AND HARDWARE (ITEMS 28 & 32) CHANGED NOTE 2: 182 'WAS' 281	2/26/2002		PHH

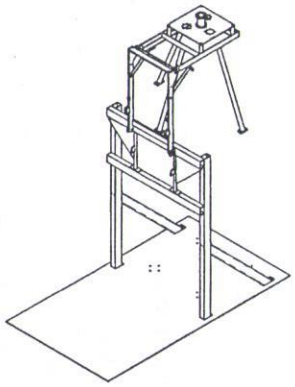

2.0 PITCH	2.8 PITCH	PART NO.	DESCRIPTION	NOTE	ZONE	ITEM
4	4	MS51971-1	NUT, PLAIN, HEX, CRES, .250-20UNC-2B			32
4	4	R64905-000	DRIVE MOUNTING PLATE SPACER			31
4	4	MS16995-62	SCREW, CAP, SOC HD, CRES, .250-20UNC-3A X 1.00 LG			30
2	2	MS35338-141	WASHER, PLAIN, CRES 3XX, .375 DIA			29
34	34	MS35338-139	WASHER, PLAIN, CRES 3XX, .250 DIA			28
2	2	MS51971-3	NUT, PLAIN, HEX, CRES, .375-16UNC-2B			27
2	2	MS16997-24	SCREW, CAP, SOC, .138(#6)-32UNC-3A X 1.00 LG			26
2	2	MS16995-81	SCREW, CAP, SOC, CRES, .375-16UNC-3A X 1.00 LG			25
8	8	MS16995-51	SCREW, CAP, SOC HD, CRES, .250-20UNC-3A X .875 LG			24
16	16	MS16995-50	SCREW, CAP, SOC HD, CRES, .250-20UNC-3A X .750 LG			23
10	10	MS16995-49	SCREW, CAP, SOC HD, CRES, .250-20UNC-3A X .625 LG			22
4	4	MS16995-48	SCREW, CAP, SOC HD, CRES, .250-20UNC-3A X .500 LG			21
6	6	MS51978-38	SCREW, SHOULDER, SOC HD, .750 SHLD, .375-16UNC-3A			20
2	2	90290A312	PULL PIN, BALL-LOK, STAINLESS, .375 DIA, 1.50 GRIP	3		19
6	6	FB810-7	BEARING, FLANGE TYPE, BRONZE, .500 ID, .625 OD, .125 THK FLANGE	4		18
2	2	TB816	BEARING, THRUST, BRONZE, .500 ID, 1.00 OD, .06 THK	4		17
2	2	R64943-000	STOP BLOCK			16
2	2	R64942-000	SUPPORT BLOCK			15
2	2	R64941-000	GUSSET STOP PLATE			14
2	2	R64940-000	PIVOT BLOCK, DRIVE SUPPORT			13
3	3	R64939-000	SUPPORT LEG, DRIVE SUPPORT			12
	1	R64908-000	DRIVE MOUNTING PLATE, 2.8 PITCH			11
1		R64931-000	DRIVE MOUNTING PLATE, 2.0 PITCH			
1		R64928-000	CONTROL ROD DRIVE EXTENSION			10
1	1	R64937-000	MAIN ARM SPACER, LOWER			9
1	1	R64936-000	MAIN ARM SPACER, UPPER			8
2	2	R64935-000	MAIN ARM			7
1	1	R64934-000	MAIN FRAME, LOW			6
1	1	R64933-000	DRIVE FRAME			5
2	2	R64932-000	GUSSET			4
2	2		DRIVE GUSSET			3
2	2	R64922-000	MID SUPPORT BRACE			2
1	1	R64930-000	CART BASE, CX			1
NA	NA	9919100	MARKING, GENERAL METHODS			
NA	NA	9900000	GENERAL REQUIREMENTS AND DRAWING INTERPRETATION			
QTY.	QTY.					

ALT-ALTERNATE AR-AS REQ'D ARS-AS REQ'D PER ASSY EM-EXPENSE MATERIAL NA-DOCUMENT PM-PROCESS MATERIAL

PART NUMBER: R64925-200 PART NUMBER: R64925-100

SHEET 1 2 3 4 5 6

ISSUE B

TITLE: DRIVE SUPPORT

PART CLASSIFICATION: UNCLASSIFIED

DRAWING CLASSIFICATION: UNCLASSIFIED

SIZE: D DRAWING NUMBER: R64925

CAGEC 14213 SCALE 1:8 SHEET 1 OF 1

STATUS SA-REL-2/26/2002 ORIGIN SolidWorks 2001

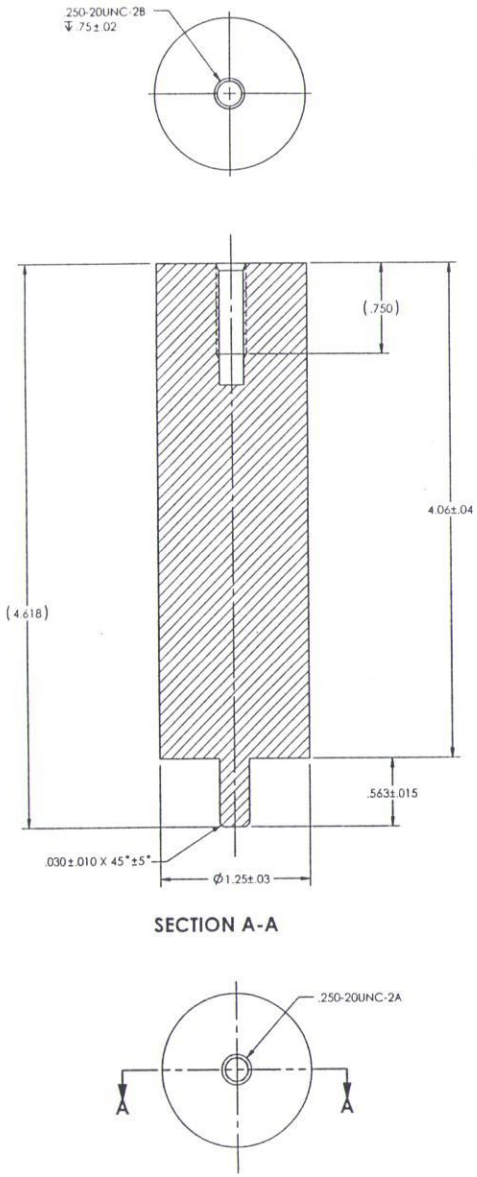

NOTES:

1. GENERAL REQUIREMENTS AND DRAWING INTERPRETATION PER 9900000.
2. MATERIAL TO BE ALUMINUM ROUND . 6061-T651, 1.125 DIA, PER ASTM B-211.
3. CERTIFICATION OF MANUFACTURER'S TEST REPORTS (CMTR'S) REQUIRED.
4. APPROX. WEIGHT: 0.49 LBS
5. MAY BE OBTAINED FROM 'RELIANCE METAL CENTER', 6817 JEFFERSON N.E. ALBUQUERQUE, N.M. 87109.

DESIGN AGENCY PART NUMBER	ISSUE	SHEET ZONE	PREPARED BY	DESCRIPTION	DATE	CHKD	APVD
R64905-000	A		D. SAMUEL, 2992/ P. H. HELMICK 6423		2/26/2002		

SHEET	1	2	3	4	5	6
ISSUE	A					

TITLE: DRIVE MOUNTING PLATE SPACER

PART CLASSIFICATION: UNCLASSIFIED

DRAWING CLASSIFICATION: UNCLASSIFIED

SIZE: D

DRAWING NUMBER: R64905

CAGEC 14213 | SCALE 2:1 | SHEET 1 OF 1

DRAWN: SA-CHK-2/26/2002 | ORIGIN: SA-SolidWorks 2001

NOTES:

1. GENERAL REQUIREMENTS AND DRAWING INTERPRETATION PER 9900000.
2. MATERIAL TO BE 304 STAINLESS PLATE, .250 THK.
3. CERTIFICATION OF MANUFACTURER'S TEST REPORTS (CMTR'S) REQUIRED.
4. APPROX. WEIGHT: .563 LBS
5. MAY BE OBTAINED FROM 'RELIANCE METAL CENTER', 6817 JEFFERSON N.E. ALBUQUERQUE, N.M. 87109.

DESIGN AGENCY FAST NUMBER	REVISION ISSUE	PREPARED BY	DESCRIPTION	DATE	CHKR	APVD
R64906-000	A	D. SAMUEL, 2992/ P. H. HELMICK, 6423		3/13/2002		

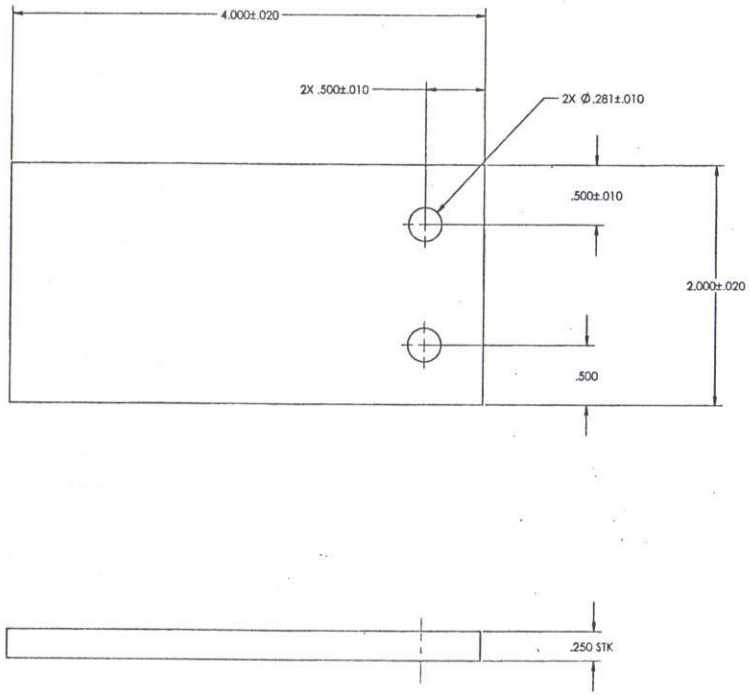

SHEET	1	2	3	4	5	6
ISSUE	A					

TITLE: SPACER, SUPPORT LEG

PART CLASSIFICATION: UNCLASSIFIED

DRAWING CLASSIFICATION: UNCLASSIFIED

SIZE: D

DRAWING NUMBER: R64906

CADBC 14213 | SCALE 2:1 | SHEET 1 OF 1

STATUS SA-CHK-3/13/2002 | ORIGIN SA-SolidWorks 2001

NOTES:

1. GENERAL REQUIREMENTS AND DRAWING INTERPRETATION PER 9900000.
2. MATERIAL TO BE ALUMINUM, 6061-T6
3. CERTIFICATION OF MANUFACTURER'S TEST REPORTS (CMTR'S) REQUIRED.
4. APPROX. WEIGHT: 2.9 LBS
5. MAY BE OBTAINED FROM 'RELIANCE METAL CENTER', 6817 JEFFERSON N.E. ALBUQUERQUE, N.M. 87109.
6. ORIENT HOLES AS SHOWN.
7. WELD AND INSPECT PER 9912117, CLASS II, USING ER4043 ELECTRODES OR RODS PER AWS A5.10-92. 100% PENETRANT INSPECTION.

DESIGN AGENCY PART NUMBER	REVISION ISSUE	SHEET ZONE	PREPARED BY	DESCRIPTION	DATE	CHKD	APVD
R64922-000	A		D. SAMUEL, 2992/ P. H. HELMICK, 6423		04/23/2001		PHH

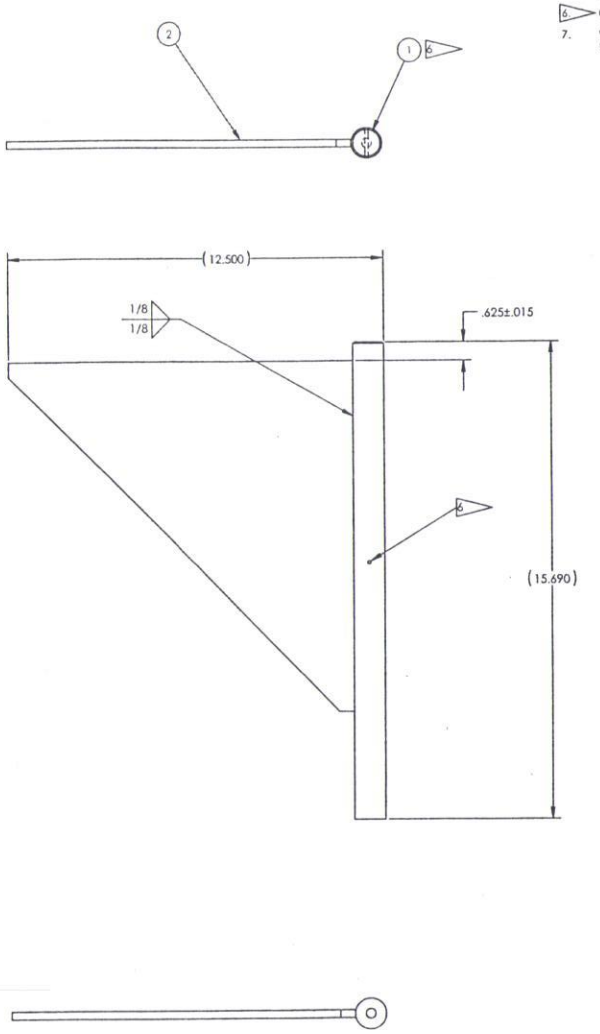

QTY	PART NO	DESCRIPTION	NOTE	ZONE	ITEM
1	R64922-200	MID SUPPORT BRACE WEB			2
1	R64922-100	MID SUPPORT BRACE POST			1
NA	9912117	WELDING, ALUMINUM ALLOYS			
NA	9919100	MARKING, GENERAL METHODS			
NA	9900000	GENERAL REQUIREMENTS AND DRAWING INTERPRETATION			

ALT-ALTERNATE AR-AS REQ'D ARS-AS REQ'D PER ASSY EM-EXPENSE MATERIAL NA-DOCUMENT PM-PROCESS MATERIAL

SHEET	1	2	3	4	5	6
ISSUE	A	A				

TITLE: MID SUPPORT BRACE

PART CLASSIFICATION: UNCLASSIFIED

(BUC)

DRAWING CLASSIFICATION: UNCLASSIFIED

SIZE: D

DRAWING NUMBER: R64922

CAGE: 14213 SCALE: 1:2 SHEET 1 OF 2

BATCH: SA-REL-04/23/2001 ORIGIN: SA-SolidWorks 2001

GEOMETRIC PRECISION = NA

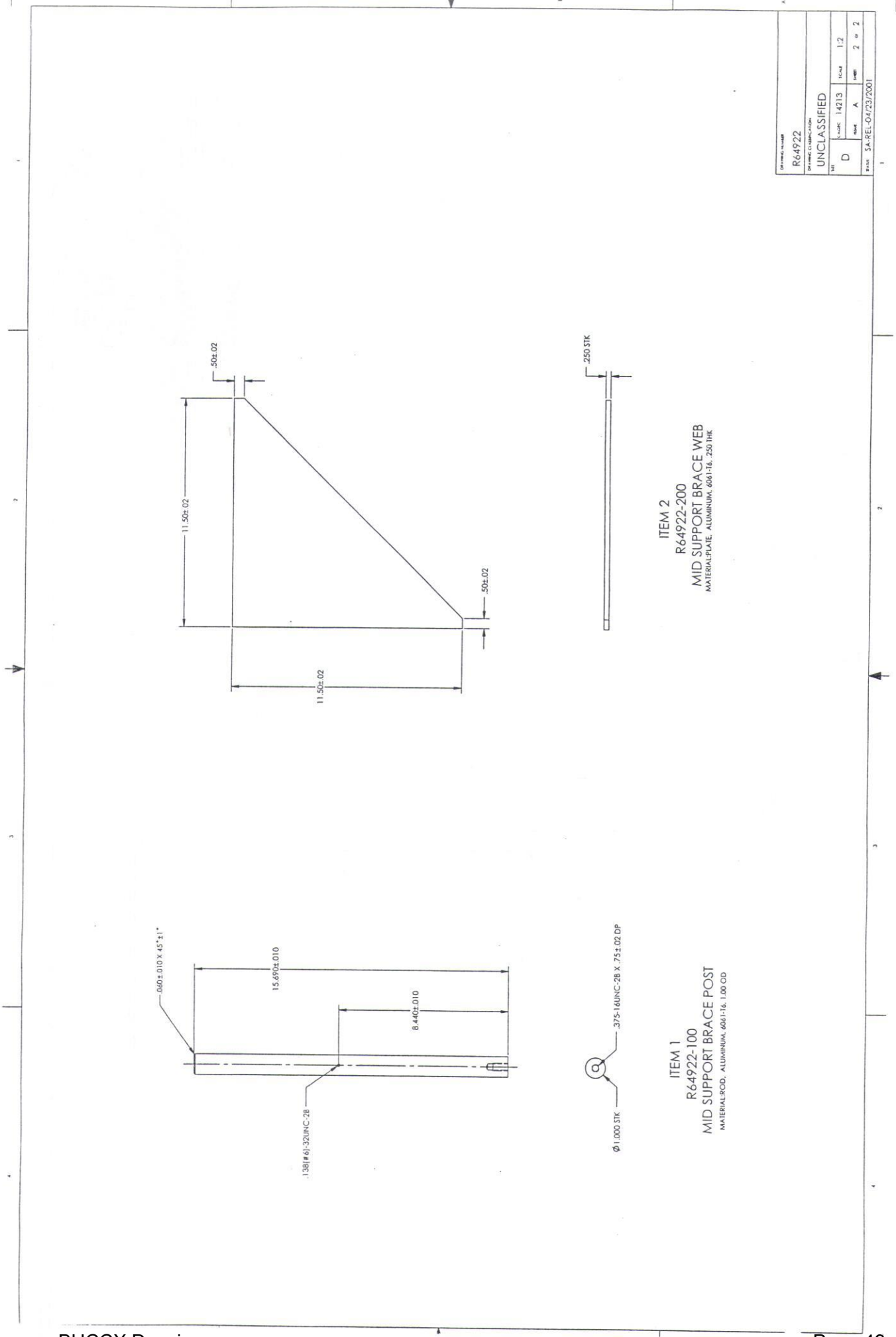
.50±.02
11.50±.02
.50±.02
11.50±.02
.250 STK
ITEM 2
R64922-200
MID SUPPORT BRACE WEB
MATERIAL:PLATE, ALUMINUM, 6061-T6, .250 THK
.060±.010 X 45°±1°
15.690±.010
8.440±.010
.138(#6)-32UNC-2B
.375-16UNC-2B X .75±.02 DP
Ø1.000 STK
ITEM 1
R64922-100
MID SUPPORT BRACE POST
MATERIAL:ROD, ALUMINUM, 6061-T6, 1.00 OD
R64922
UNCLASSIFIED
D
14213
A
1:2
2 of 2
SA-REL-04/23/2001

NOTES:

1. GENERAL REQUIREMENTS AND DRAWING INTERPRETATION PER 9900000.
2. MATERIAL TO BE ALUMINUM, 6061-T6
3. CERTIFICATION OF MANUFACTURER'S TEST REPORTS (CMTR'S) REQUIRED.
4. APPROX. WEIGHT: 2.9 LBS
5. MAY BE OBTAINED FROM 'RELIANCE METAL CENTER', 6817 JEFFERSON N.E. ALBUQUERQUE, N.M. 87109.
6. ORIENT HOLES AS SHOWN.
7. WELD AND INSPECT PER 9912117, CLASS II, USING ER4043 ELECTRODES OR RODS PER AWS A5.10-92. 100% PENETRANT INSPECTION.
8. MAY BE MANUFACTURED AS 1(ONE) PIECE.

DESIGN AGENCY PART NUMBER	REVISION						
	ISSUE	SHEET ZONE	PREPARED BY	DESCRIPTION	DATE	CHKD	APVD
R64928-000	A		D. SAMUEL, 2992/ P. H. HELMICK, 6423		06/06/2001		PHH
	B		D. SAMUEL, 2992/ P. H. HELMICK, 6423	ADDED NOTE 8.	10/11/2001		PHH

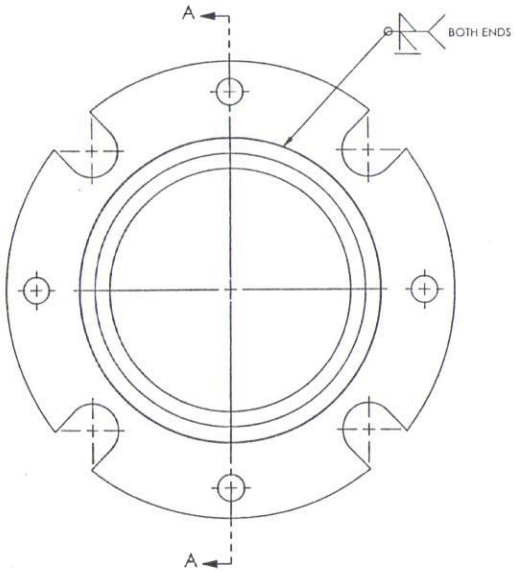

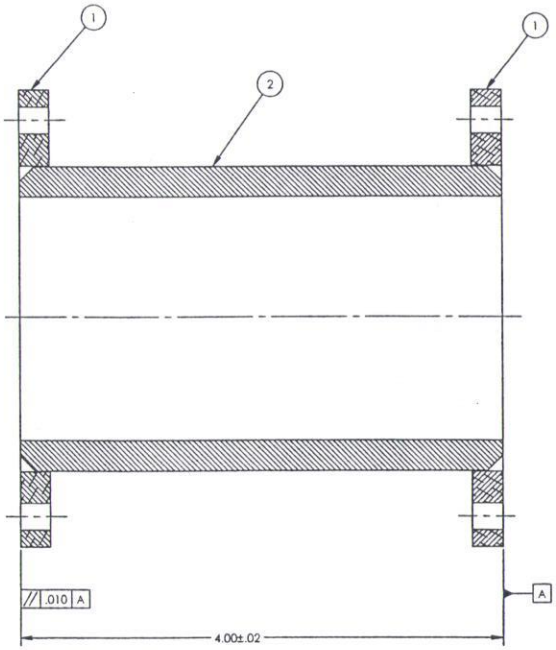

SECTION A-A

QTY	PART NO	DESCRIPTION	NOTE	ZONE	ITEM
1	R64928-200	CONTROL ROD DRIVE EXTINSION TUBE			2
2	R64928-100	CONTROL ROD DRIVE FLANGE EXTENSIOS FLANGE			1
NA	9912117	WELDING, ALUMINUM ALLOYS			
NA	9919100	MARKING, GENERAL METHODS			
NA	9900000	GENERAL REQUIREMENTS AND DRAWING INTERPRETATION			

ALT-ALTERNATE AR-AS REQ'D ARS-AS REQ'D PER ASSY EM-EXPENSE MATERIAL NA-DOCUMENT PM-PROCESS MATERIAL

SHEET	1	2	3	4	5	6
ISSUE	B	B				

TITLE: CONTROL ROD DRIVE EXTENSION

PART CLASSIFICATION: UNCLASSIFIED

DRAWING CLASSIFICATION: UNCLASSIFIED

SIZE: D

DRAWING NUMBER: R64928

CAGEC 14213 SCALE 2:1 SHEET 1 OF 2

STATUS SA-REL-10/11/2001 ORIGIN SolidWorks 2001

GEOMETRIC PRECISION = NA

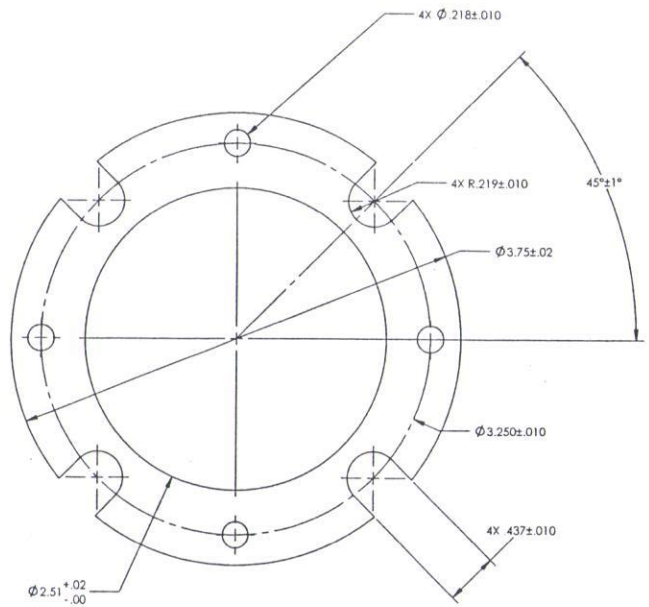

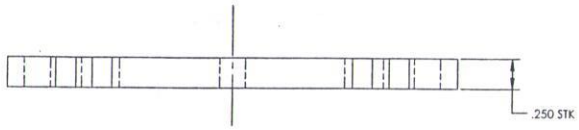

ITEM 1
R64928-100
CONTROL ROD DRIVE FLANGE EXTENSION FLANGE
MATERIAL:PLATE, ALUMINUM, 6061-T6, .250 THK

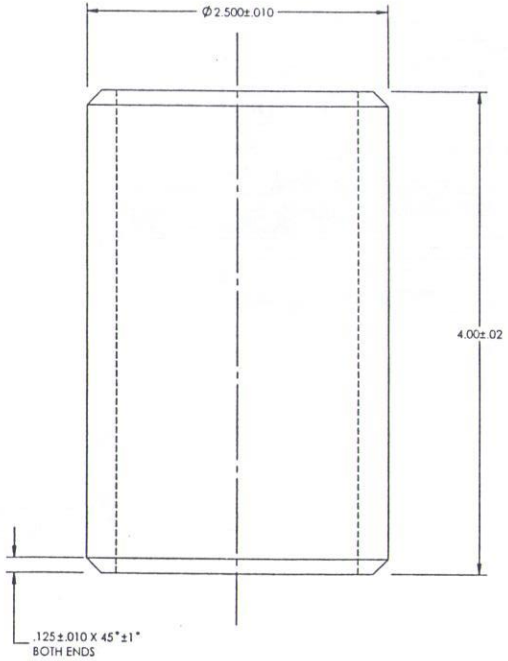

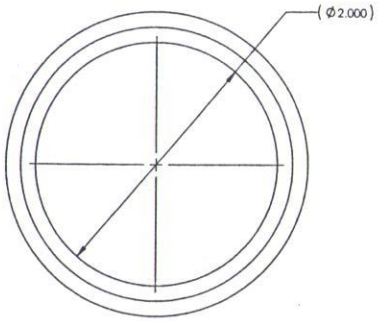

ITEM 2
R64928-200
CONTROL ROD DRIVE EXTINSION TUBE
MATERIAL:TUBE, ALUMINUM, 6061-T6, 2.50 OD, .250 WALL

DRAWING NUMBER R64928			
DRAWING CLASSIFICATION UNCLASSIFIED			
SIZE D	CAGE/EC 14213	SCALE 2:1	
	ISSUE B	SHEET 2 OF 2	
STATUS SA-REL-10/11/2001			

NOTES:

1. GENERAL REQUIREMENTS AND DRAWING INTERPRETATION PER 9900000.
2. MATERIAL TO BE ALUMINUM PLATE, 6061-T6, .50 THK.
3. CERTIFICATION OF MANUFACTURER'S TEST REPORTS (CMTR'S) REQUIRED.
4. APPROX. WEIGHT: 201 LBS
5. MAY BE OBTAINED FROM 'RELIANCE METAL CENTER', 6817 JEFFERSON N.E. ALBUQUERQUE, N.M. 87109.

DESIGN AGENCY PART NUMBER: R64930-000

REVISION

ISSUE	SHEET ZONE	PREPARED BY	DESCRIPTION	DATE	CHKR	APVD
A		D. SAMUEL:2992/ P. H. HELMICK/6423		05/10/2001		PHH
B		D. SAMUEL. 2992/ P. H. HELMICK. 6423	CHANGED OUTSIDE TOLERANCE TO +/- .12	06/21/2001		PHH

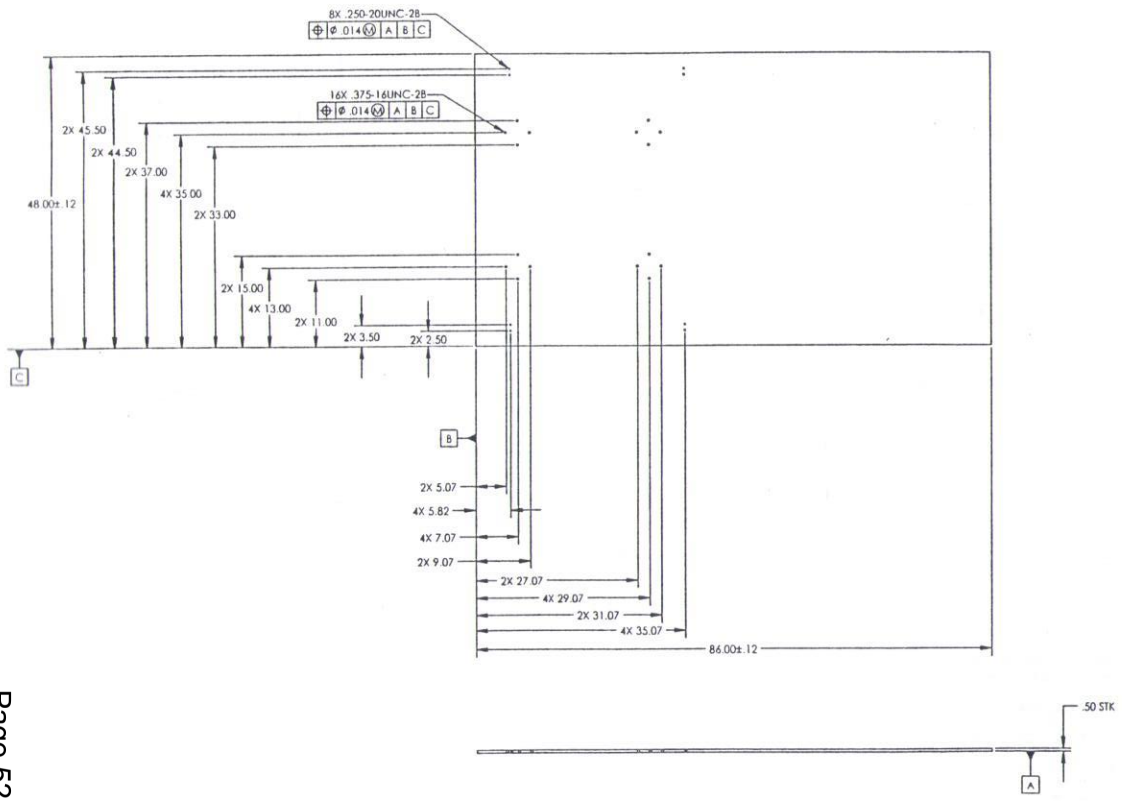

SHEET	1	2	3	4	5	6
ISSUE	B					

TITLE: CART BASE TRANSFER PLATE (BUC)

PART CLASSIFICATION: UNCLASSIFIED

DRAWING CLASSIFICATION: UNCLASSIFIED

SIZE: D

DRAWING NUMBER: R64930

CAGE: 14213 SCALE: 1:10 SHEET 1 OF 1

STATUS: SA-REL-06/21/2001

ORIGIN: SolidWorks 2000

GEOMETRIC PRECISION = NA

NOTES:

1. GENERAL REQUIREMENTS AND DRAWING INTERPRETATION PER 9900000.
2. MATERIAL TO BE ALUMINUM PLATE, 6061-T6, .250 THK.
3. CERTIFICATION OF MANUFACTURER'S TEST REPORTS (CMTR'S) REQUIRED.
4. APPROX. WEIGHT: 5.6 LBS
5. MAY BE OBTAINED FROM 'RELIANCE METAL CENTER', 6817 JEFFERSON N.E. ALBUQUERQUE, N.M. 87109.

DESIGN AGENCY PART NUMBER	REVISION ISSUE	SHEET ZONE	PREPARED BY	DESCRIPTION	DATE	CHKD	APVD
R64931-000	A		D. SAMUEL, 2992/ P. H. HELMICK, 6423		06/06/2001		FHH

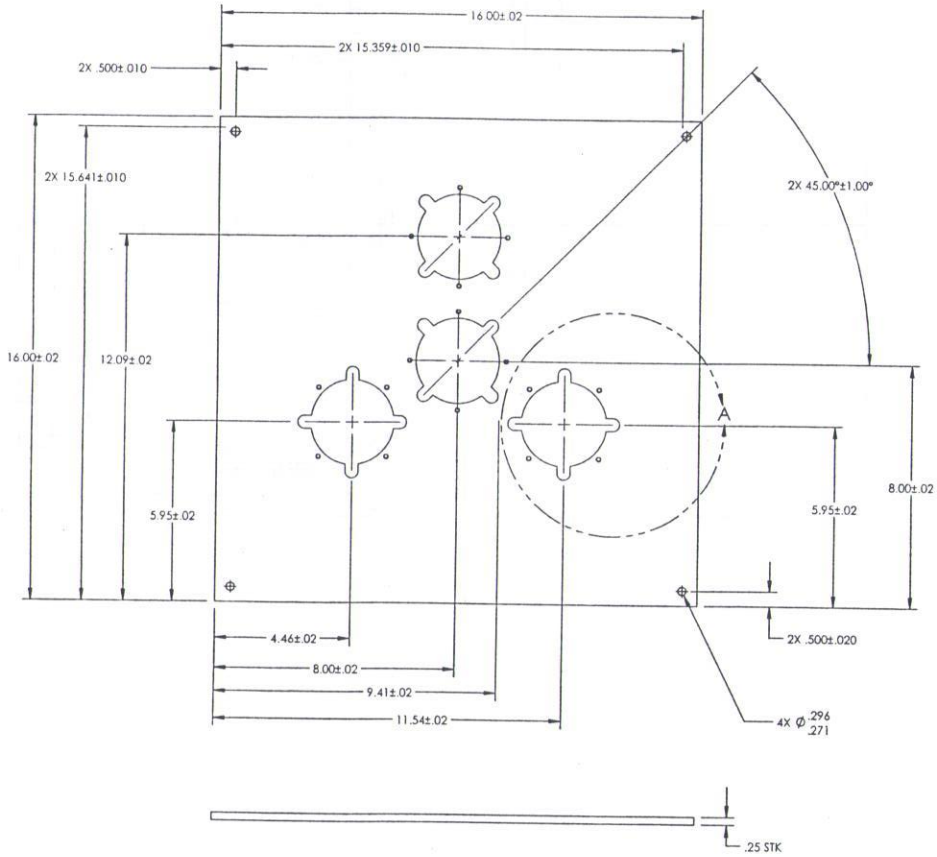

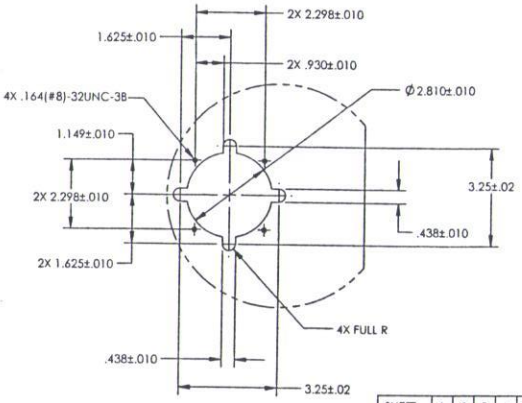

DETAIL A
4 PLCS ROTATED AS SHOWN FOR 2 FEATURES

SHEET	1	2	3	4	5	6	TITLE DRIVE MOUNTING PLATE, 2.0 PITCH
ISSUE	A						
PART CLASSIFICATION UNCLASSIFIED							(BUC)
DRAWING CLASSIFICATION UNCLASSIFIED					SIZE D	DRAWING NUMBER R64931	
					CAGE 14213	SCALE 1:2	SHEET 1 OF 1
SIGNATURE SA-REL-06/06/2001					ORIGIN SolidWorks 2000		

NOTES:

1. GENERAL REQUIREMENTS AND DRAWING INTERPRETATION PER 9900000.
2. MATERIAL TO BE ALUMINUM PLATE, 6061-T6, .250 THK.
3. CERTIFICATION OF MANUFACTURER'S TEST REPORTS (CMTR'S) REQUIRED.
4. APPROX. WEIGHT: 5.6 LBS
5. MAY BE OBTAINED FROM 'RELIANCE METAL CENTER', 6817 JEFFERSON N.E. ALBUQUERQUE, N.M. 87109.

DESIGN AGENCY PART NUMBER	REVISION						
	ISSUE	SHEET ZONE	PREPARED BY	DESCRIPTION	DATE	CHKD	APVD
R64938-000	A		D. SAMUEL, 2992/ P. H. HELMICK, 6423		06/06/2001		PHH

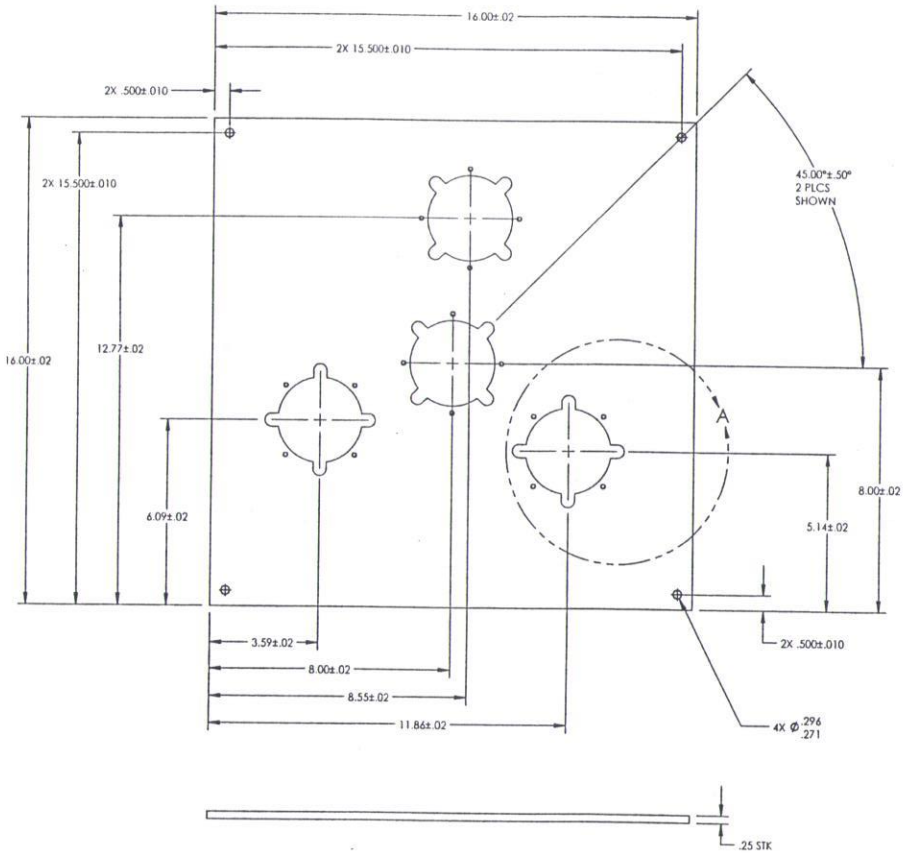

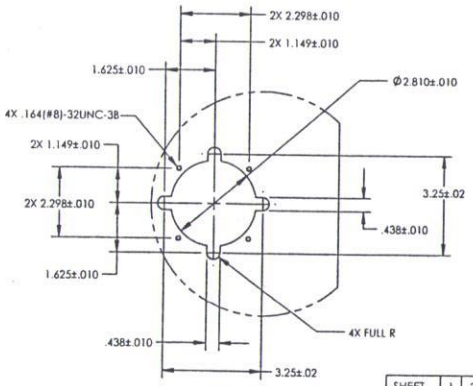

DETAIL A

4 PLCS ROTATED AS SHOWN FOR 2 FEATURES

SHEET	1	2	3	4	5	6
ISSUE	A					

TITLE: DRIVE MOUNTING PLATE, 2.8 PITCH

PART CLASSIFICATION: UNCLASSIFIED

(BUC)

DRAWING CLASSIFICATION: UNCLASSIFIED

SIZE: D

DRAWING NUMBER: R64938

CAGE: 14213 | SCALE: 1:2 | SHEET 1 OF 1

PARAS: SA-REL-06/06/2001

ORIGIN: SolidWorks 2000

NOTES:

1. GENERAL REQUIREMENTS AND DRAWING INTERPRETATION PER 9900000
2. MATERIAL TO BE ALUMINUM PLATE, 6061-T6, .250 THK.
3. CERTIFICATION OF MANUFACTURER'S TEST REPORTS (CMTR'S) REQUIRED.
4. APPROX. WEIGHT: 0.5 LBS
5. MAY BE OBTAINED FROM 'RELIANCE METAL CENTER', 6817 JEFFERSON N.E. ALBUQUERQUE, N.M. 87109.

DESIGN AGENCY PART NUMBER	REVISION ISSUE	SHEET ZONE	PREPARED BY	DESCRIPTION	DATE	CHKD	APVD
R64932-000	A		D. SAMUEL, 2992/ P. H. HELMICK, 6423		04/23/2001		PHH

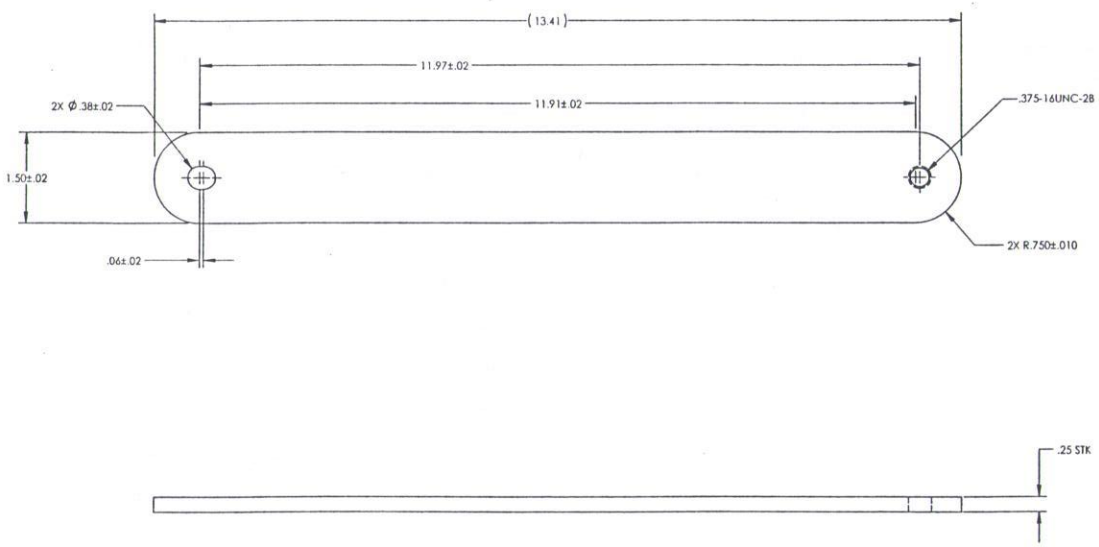

SHEET	1	2	3	4	5	6
ISSUE	A					

TITLE: GUSSET

PART CLASSIFICATION: UNCLASSIFIED

(BUC)

DRAWING CLASSIFICATION: UNCLASSIFIED

SIZE: D

DRAWING NUMBER: R64932

CAGE: 14213 SCALE: 1:1 SHEET 1 OF 1

BATCH: SA-REL-04/23/2001 ORIGIN: SolidWorks 2000

GEOMETRIC PRECISION INC

NOTES:

1. GENERAL REQUIREMENTS AND DRAWING INTERPRETATION PER 9900000.
2. MATERIAL TO BE ALUMINUM, 6061-T6
3. CERTIFICATION OF MANUFACTURER'S TEST REPORTS (CMTR'S) REQUIRED.
4. APPROX. WEIGHT: 141 LBS
5. MAY BE OBTAINED FROM 'RELIANCE METAL CENTER', 6817 JEFFERSON N.E. ALBUQUERQUE, N.M. 87109.
6. ORIENT HOLES AS SHOWN.
7. WELD AND INSPECT PER 9912117, CLASS II, USING ER4043 ELECTRODES OR RODS PER AWS A5.10-92. 100% PENETRANT INSPECTION.

DESIGN AGENCY PART NUMBER	REVISION ISSUE	SHEET ZONE	PREPARED BY	DESCRIPTION	DATE	CHKD	APVD
R64933-000	A		D. SAMUEL, 2992/ P. H. HELMICK, 6423		07/13/2001		PHH

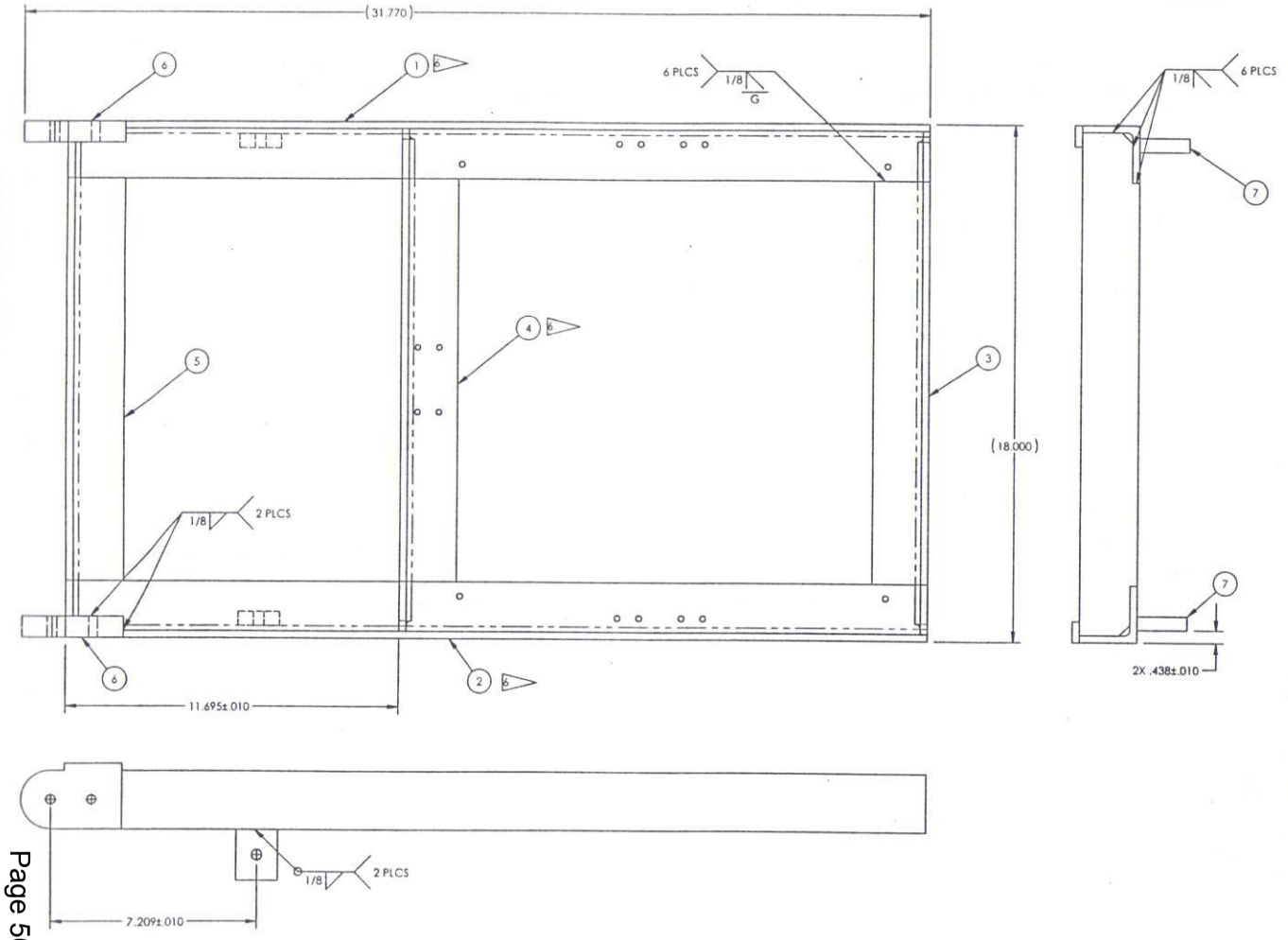

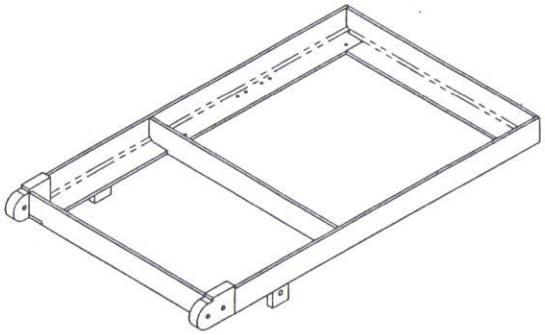

QTY	PART NO	DESCRIPTION	NOTE	ZONE	ITEM
2	R64933-700	GUSSET BLOCK			7
2	R64933-600	PIVOT BLOCK			6
1	R64933-500	CROSS ANGLE, PIVOT END			5
1	R64933-400	CROSS ANGLE, MID			4
1	R64933-300	CROSS ANGLE, END			3
1	R64933-200	MAIN ANGLE, RIGHT			2
1	R64933-100	MAIN ANGLE, LEFT			1
NA	9912117	WELDING, ALUMINUM ALLOYS			
NA	9919100	MARKING, GENERAL METHODS			
NA	9900000	GENERAL REQUIREMENTS AND DRAWING INTERPRETATION			

ALT-ALTERNATE AR-AS REQ'D ARS-AS REQ'D PER ASSY EM-EXPENSE MATERIAL NA-DOCUMENT PM-PROCESS MATERIAL

SHEET	1	2	3	4	5	6
ISSUE	A	A	A	A	A	

TITLE: DRIVE FRAME (BUC)

PART CLASSIFICATION: UNCLASSIFIED

DRAWING CLASSIFICATION: UNCLASSIFIED

SIZE: D

DRAWING NUMBER: R64933

CAGEC: 14213 SCALE: 1:2 SHEET 1 OF 5

SAVED: SA-REL-07/13/2001 ORIGIN: SolidWorks 2000

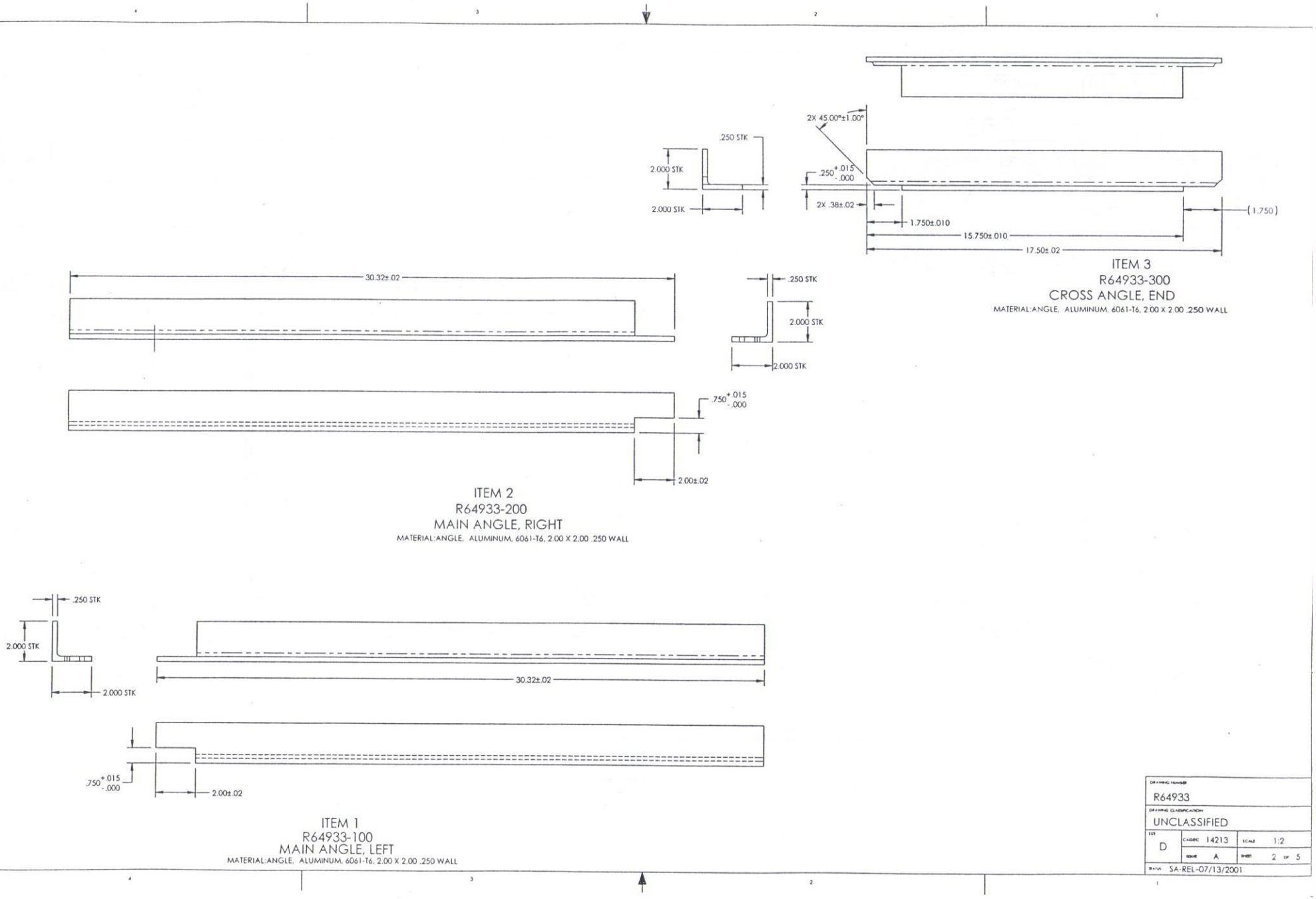
.250 STK
2.000 STK
2.000 STK
2X 45.00°±1.00°
.250 +.015 -.000
2X .38±.02
1.750±.010
15.750±.010
17.50±.02
(1.750)
ITEM 3
R64933-300
CROSS ANGLE, END
MATERIAL:ANGLE, ALUMINUM, 6061-T6, 2.00 X 2.00 .250 WALL
30.32±.02
.250 STK
2.000 STK
2.000 STK
.750 +.015 -.000
2.00±.02
ITEM 2
R64933-200
MAIN ANGLE, RIGHT
MATERIAL:ANGLE, ALUMINUM, 6061-T6, 2.00 X 2.00 .250 WALL
.250 STK
2.000 STK
2.000 STK
30.32±.02
.750 +.015 -.000
2.00±.02
ITEM 1
R64933-100
MAIN ANGLE, LEFT
MATERIAL:ANGLE, ALUMINUM, 6061-T6, 2.00 X 2.00 .250 WALL
R64933
UNCLASSIFIED
D
14213
1:2
A
2 OF 5
SA-REL-07/13/2001

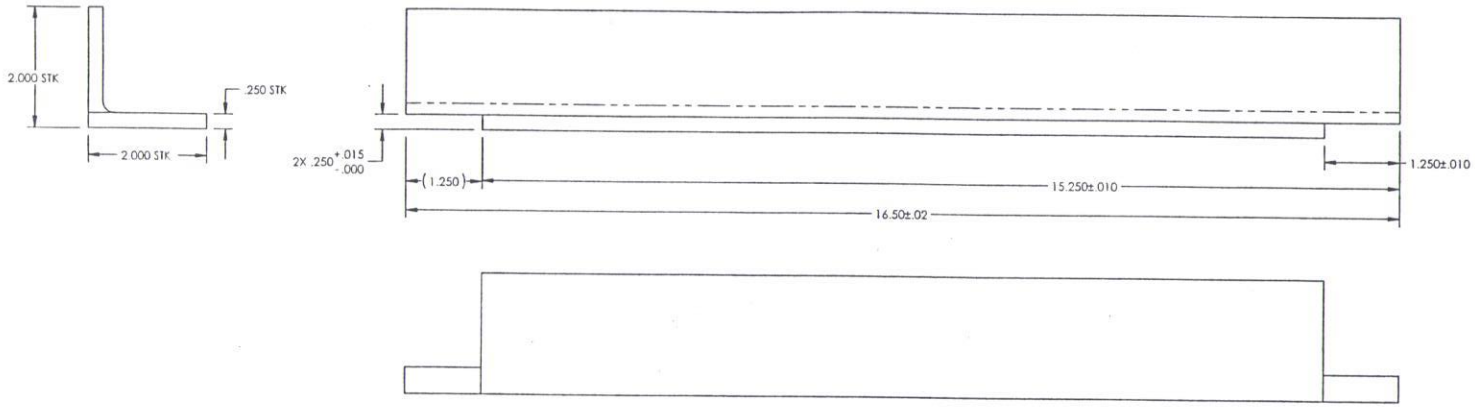

ITEM5
R64933-500
CROSS ANGLE, PIVOT END
MATERIAL: ALUMINUM, 6061-T6, .250 THK

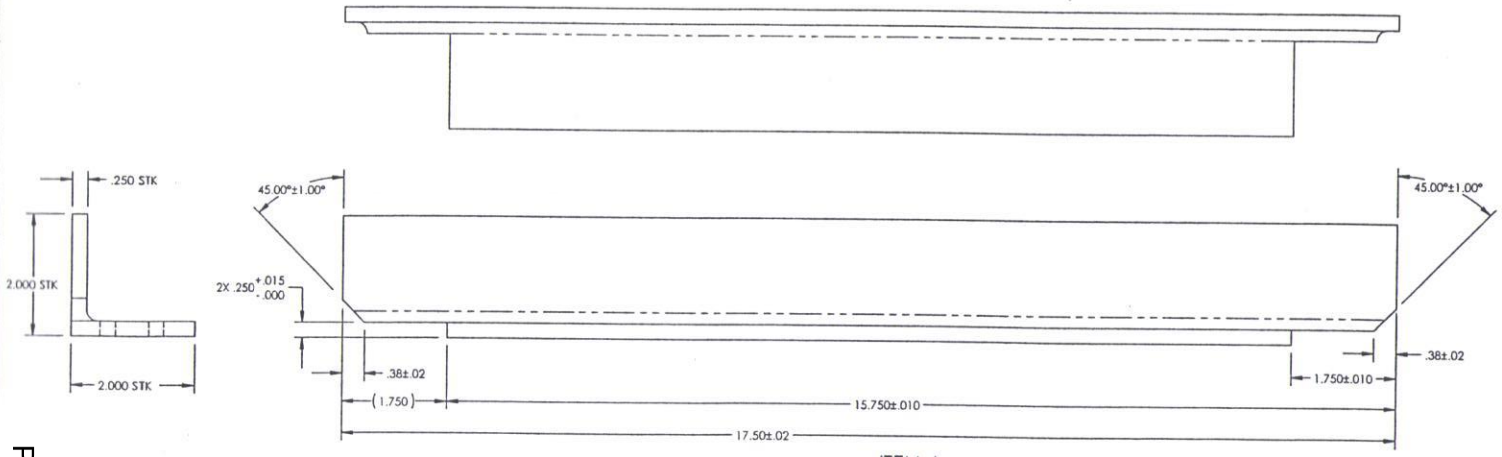

ITEM 4
R64933-400
CROSS ANGLE, MID
MATERIAL:ANGLE, ALUMINUM, 6061-T6, 2.00 X 2.00 .250 WALL

DRAWING NUMBER	R64933
DRAWING CLASSIFICATION	UNCLASSIFIED
SIZE D	CAGE 14213 / SCALE 1:1
ISSUE A	SHEET 3 OF 5
FORM SA-REL-07/13/2001	

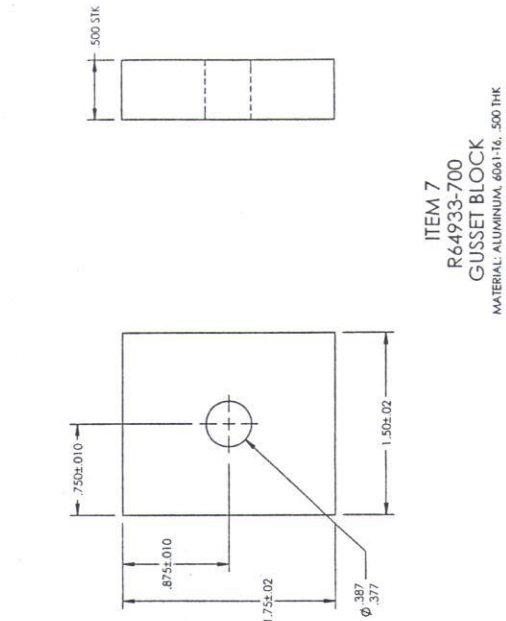

ITEM 7
R64933-700
GUSSET BLOCK
MATERIAL: ALUMINUM, 6061-T6, .500 THK

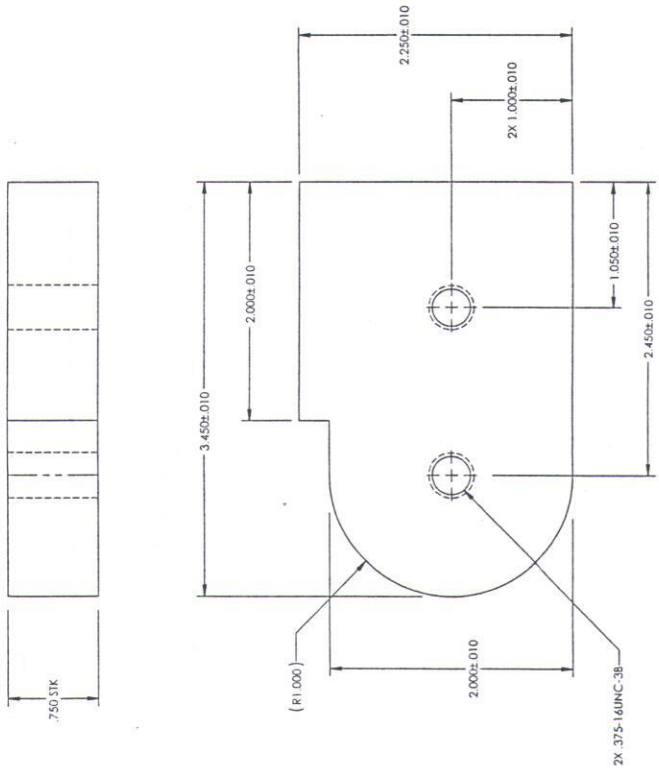

ITEM 6
R64933-600
PIVOT BLOCK
MATERIAL: ALUMINUM, 6061-T6, .750 THK

DRAWING NUMBER
R64933
DRAWING CLASSIFICATION
UNCLASSIFIED

SIZE	CAGE	SCALE	
D	14213	2:1	
	SIZE	A	SHEET 4 OF 5

STATUS SA-REL-07/13/2001

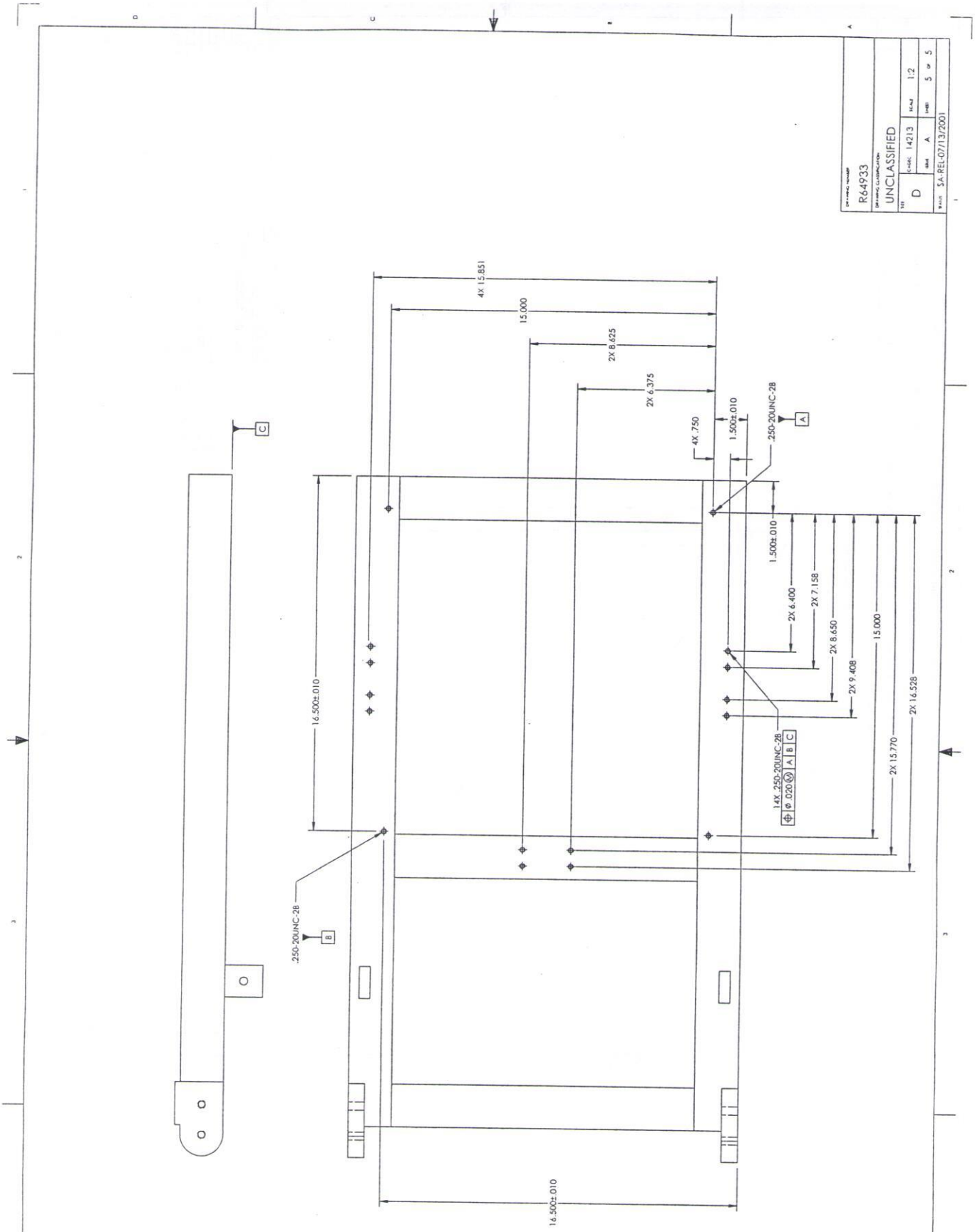
DRAWING NUMBER
R64933
DRAWING CLASSIFICATION
UNCLASSIFIED
SIZE
D
CAGE CODE 14213
SCALE 1:2
SHEET 5 OF 5
SA-REL-07/13/2001
4X 15.851
15.000
2X 8.625
2X 6.375
4X .750
1.500±.010
.250-20UNC-2B
A
1.500±.010
2X 6.400
2X 7.158
2X 8.650
2X 9.408
15.000
2X 15.770
2X 16.528
14X .250-20UNC-2B
⌖ φ .020 Ⓜ A B C
16.500±.010
.250-20UNC-2B
B
C
16.500±.010

NOTES:

1. GENERAL REQUIREMENTS AND DRAWING INTERPRETATION PER 9900000.
2. MATERIAL TO BE ALUMINUM, 6061-T6
3. CERTIFICATION OF MANUFACTURER'S TEST REPORTS (CMTR'S) REQUIRED.
4. APPROX. WEIGHT: 26 LBS.
5. MAY BE OBTAINED FROM 'RELIANCE METAL CENTER', 6817 JEFFERSON N.E. ALBUQUERQUE, N.M. 87109.
6. ORIENT HOLES AS SHOWN.
7. WELD AND INSPECT PER 9912117, CLASS II, USING ER4043 ELECTRODES OR RODS PER AWS A5.10-92. 100% PENETRANT INSPECTION.

DESIGN AGENCY PART NUMBER: R64934-000

REVISION

ISSUE	SHEET ZONE	PREPARED BY	DESCRIPTION	DATE	CHKD	APVD
A		D. SAMUEL/2992/P.H.HELMICK.6423		04/23/01		PHH
B	3/3A	D. SAMUEL. 2992/ P. H. HELMICK. 6523	ADDED: ".250-20UNC-2B" CALLOUT	07/26/2001		PHH

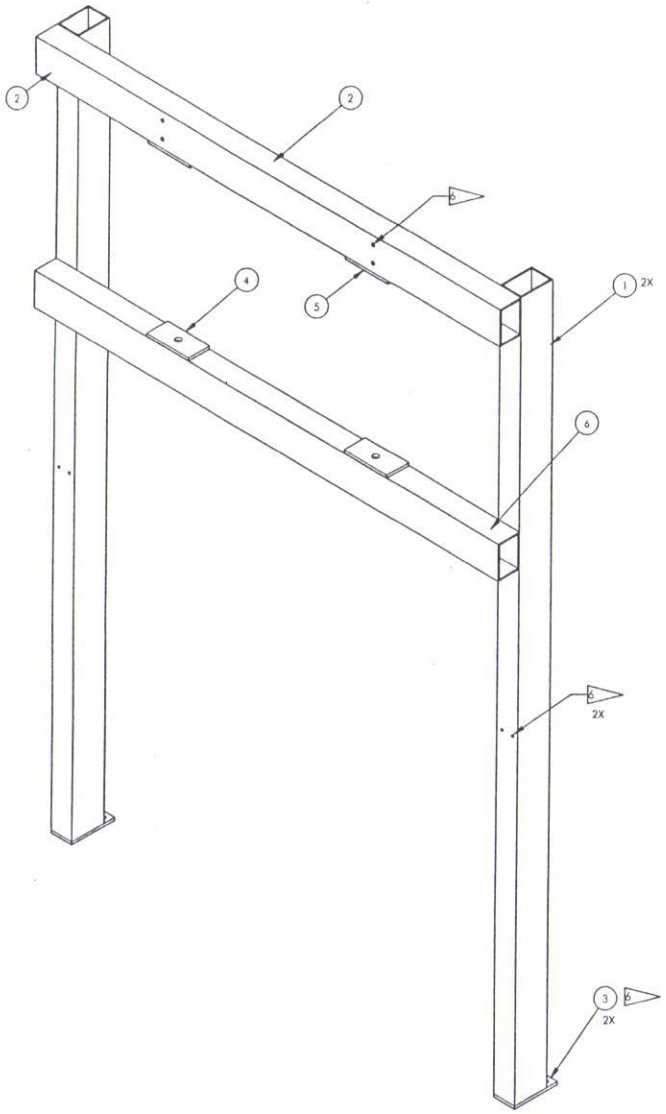

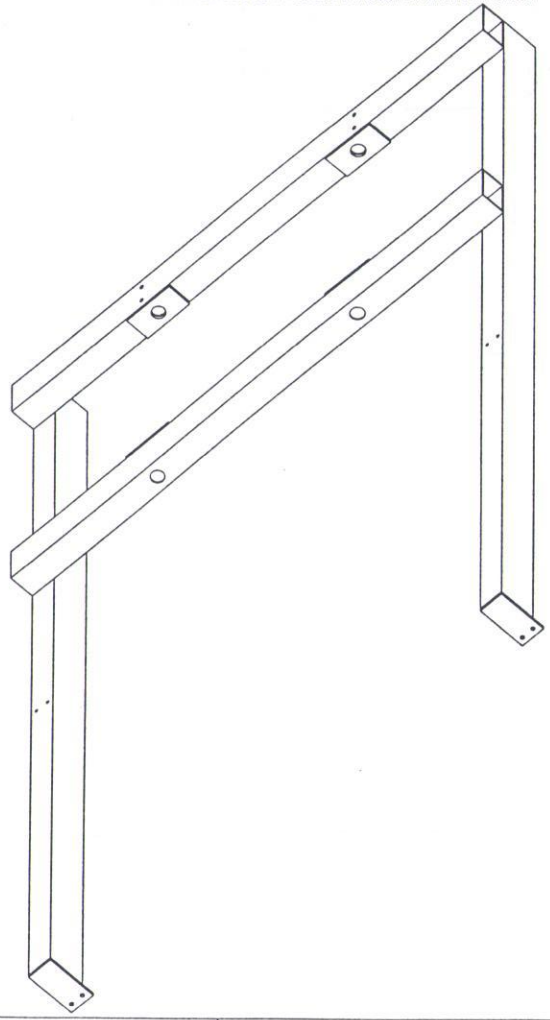

QTY.	PART NO	DESCRIPTION	NOTE	ZONE	ITEM
1	R64934-600	HORIZONTAL MID TUBE, LOWER MAIN FRAME			6
2	R64934-500	BRACE PLATE, UPPER TUBE			5
2	R64934-400	BRACE PLATE, MID TUBE			4
2	R64934-300	FOOT, LOWER MAIN FRAME			3
1	R64934-200	HORIZONTAL UPPER TUBE, LOWER MAIN FRAME			2
2	R64934-100	VERTICLE LEG, LOWER MAIN FRAME			1
NA	9912117	WELDING, ALUMINUM ALLOYS			
NA	9919100	MARKING, GENERAL METHODS			
NA	9900000	GENERAL REQUIREMENTS AND DRAWING INTERPRETATION			

ALT-ALTERNATE AR-AS REQ'D ARS-AS REQ'D PER ASSY EM-EXPENSE MATERIAL NA-DOCUMENT PM-PROCESS MATERIAL

SHEET	1	2	3	4	5	6
ISSUE	B	B	B	B		

TITLE: MAIN FRAME, LOW

PART CLASSIFICATION: UNCLASSIFIED

(BUC)

DRAWING CLASSIFICATION: UNCLASSIFIED

SIZE: D

DRAWING NUMBER: R64934

CAGE: 14213 SCALE: 1:4 SHEET 1 OF 4

BASIS: SA-REL-07/26/2001 ORIGIN: SolidWorks 2000

GEOMETRIC PRECISION = NA

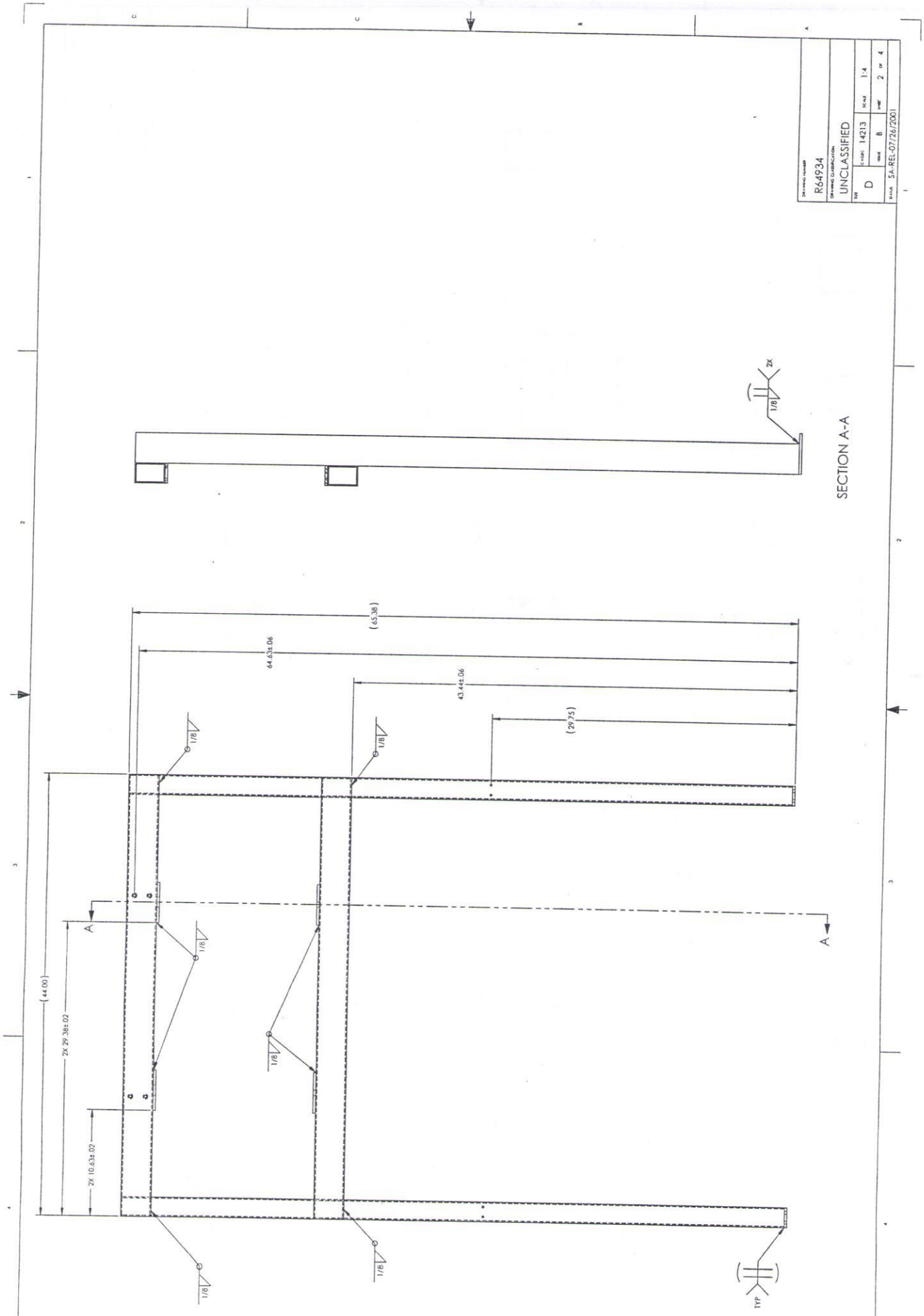
DRAWING NUMBER
R64934
DRAWING CLASSIFICATION
UNCLASSIFIED
SIZE
D
CODE
14213
SCALE
1:4
SHEET
8
SHEET
2 OF 4
STATUS
SA-REL-07/26/2001
SECTION A-A
2X
1/8
(65.38)
64.63±.06
43.44±.06
(29.75)
(44.00)
2X 29.38±.02
2X 10.63±.02
A
A
TYP

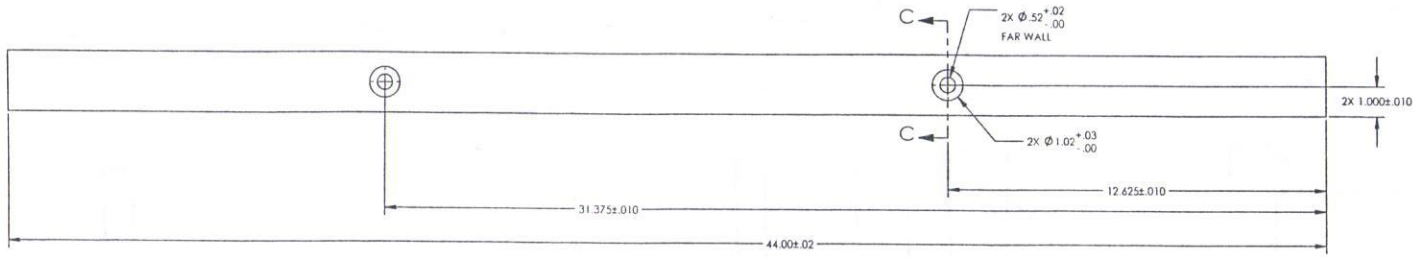

SECTION C-C

ITEM 6
R64934-600
HORIZONTAL MID TUBE, LOWER MAIN FRAME
MATERIAL: TUBUING, RECTANGULAR, ALUMINUM, 6061-T6, 2.00 X 3.00, .125 WALL

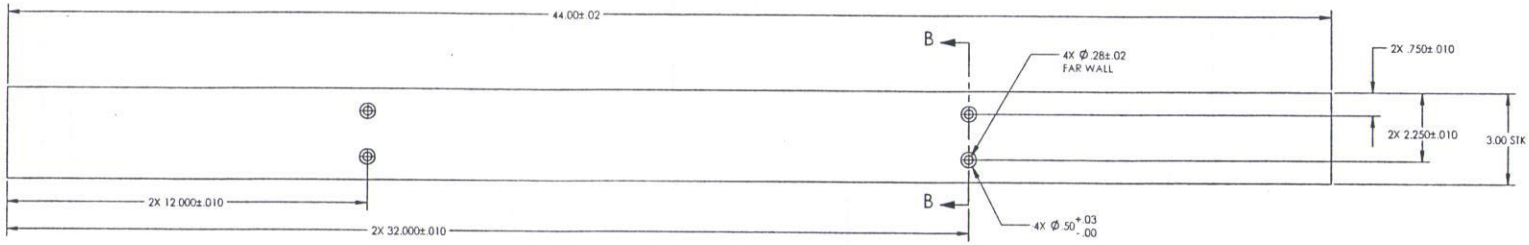

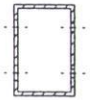

SECTION B-B

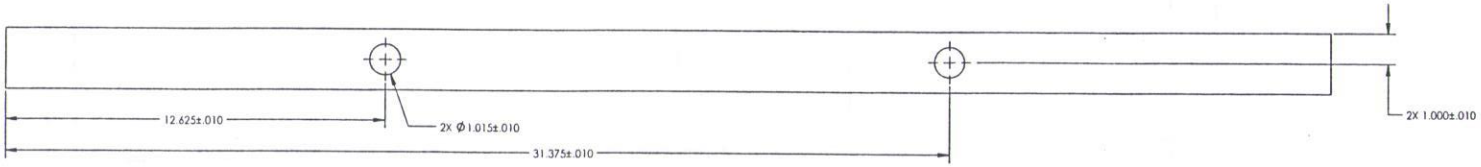

ITEM 2
R64934-200
HORIZONTAL UPPER TUBE, LOWER MAIN FRAME
MATERIAL: TUBUING, RECTANGULAR, ALUMINUM, 6061-T6, 2.00 X 3.00, .125 WALL

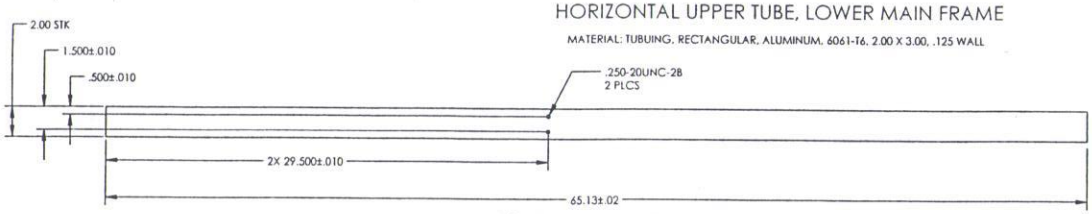

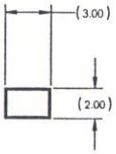

ITEM 1
R64934-100
SCALE:1/4
VERTICLE LEG, LOWER MAIN FRAME
MATERIAL: TUBUING, RECTANGULAR, ALUMINUM, 6061-T6, 2.00 X 3.00, .125 WALL

DRAWING NUMBER	R64934		
DRAWING CLASSIFICATION	UNCLASSIFIED		
SIZE D	CAGE C 14213	SCALE 1:2	
	REV B	SHEET 3 OF 4	
RATIO SA-REL-07/26/2001			

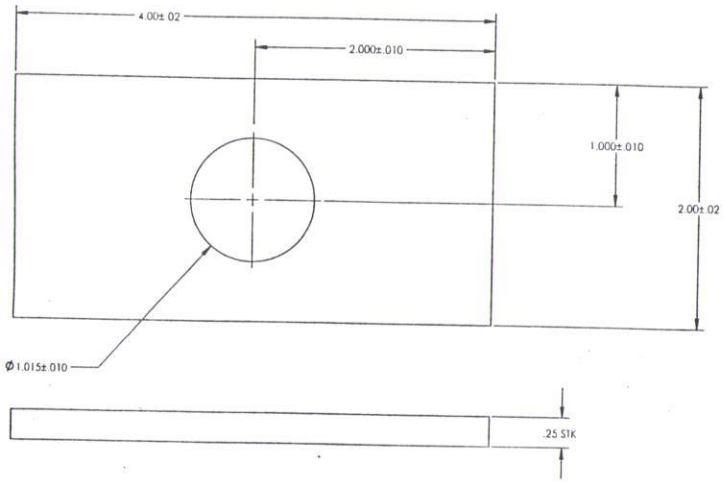

ITEM 5
R64934-500
BRACE PLATE, UPPER TUBE
MATERIAL: PLATE, ALUMINUM, 6061-T6, .25 THK

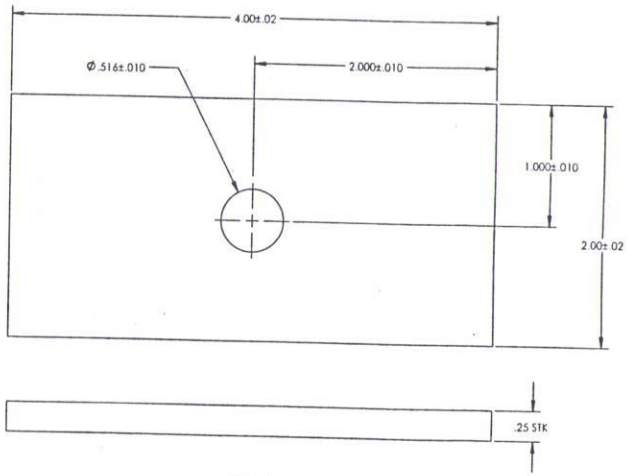

ITEM 4
R64934-400
BRACE PLATE, MID TUBE
MATERIAL: PLATE, ALUMINUM, 6061-T6, .25 THK

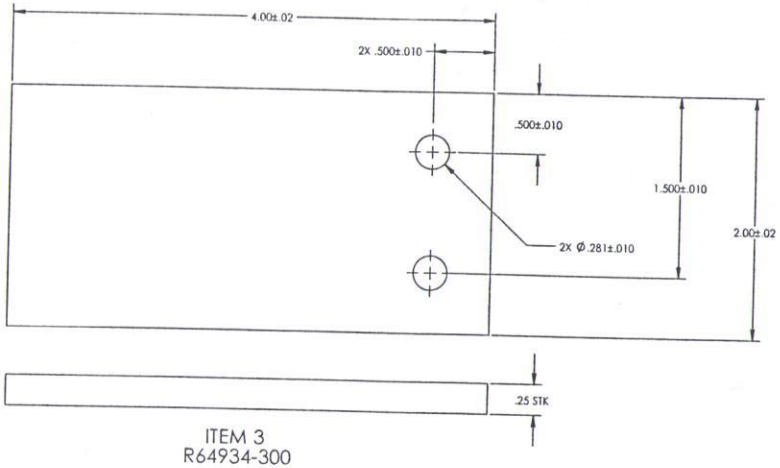

ITEM 3
R64934-300
FOOT, LOWER MAIN FRAME
MATERIAL: PLATE, ALUMINUM, 6061-T6, .25 THK

DRAWING NUMBER R64934			
DRAWING CLASSIFICATION UNCLASSIFIED			
SIZE D	CAGE 14213	SCALE 2:1	
	ISSUE B	SHEET 4 OF 4	
STATUS SA-REL-07/26/2001			

NOTES:

1. GENERAL REQUIREMENTS AND DRAWING INTERPRETATION PER 9900000.
2. MATERIAL TO BE ALUMINUM PLATE, 6061-T6, .500 THK.
3. CERTIFICATION OF MANUFACTURER'S TEST REPORTS (CMTR'S) REQUIRED.
4. APPROX. WEIGHT: 3.6 LBS
5. MAY BE OBTAINED FROM 'RELIANCE METAL CENTER', 6817 JEFFERSON N.E. ALBUQUERQUE, N.M. 87109.

6 THIS HOLE IS TO BE MATCH DRILLED AND TAPED AT ASSEMBLY STAGE.

DESIGN AGENCY PART NUMBER	REVISION ISSUE	SHEET ZONE	PREPARED BY	DESCRIPTION	DATE	CHKD	APVD
R64935-000	A		D. SAMUEL, 2992/ P. H. HELMICK, 6423		04/19/2001		PHH

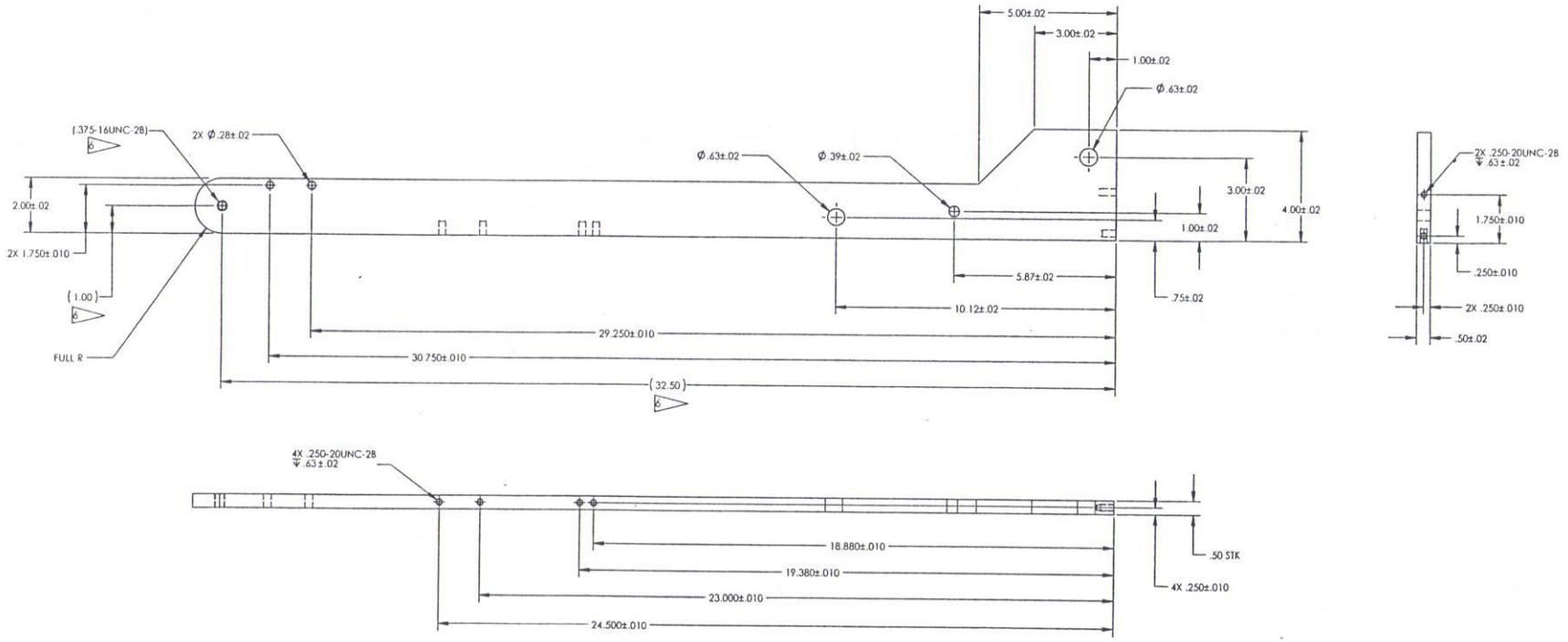

SHEET	1	2	3	4	5	6	TITLE
ISSUE	A						MAIN ARM
PART CLASSIFICATION: UNCLASSIFIED							(BUC)
DRAWING CLASSIFICATION: UNCLASSIFIED					SIZE D		DRAWING NUMBER R64935
					CAGE 14213	SCALE 1:2	SHEET 1 OF 1
DRAWN SA-REL-04/19/2001					ORIGIN SA-SolidWorks 2001		

GEOMETRIC PRECISION = NA

NOTES:

1. GENERAL REQUIREMENTS AND DRAWING INTERPRETATION PER 9900000.
2. MATERIAL TO BE ALUMINUM PLATE, 6061-T6, .500 THK.
3. CERTIFICATION OF MANUFACTURER'S TEST REPORTS (CMTR'S) REQUIRED.
4. APPROX. WEIGHT: 1.9 LBS
5. MAY BE OBTAINED FROM 'RELIANCE METAL CENTER', 6817 JEFFERSON N.E. ALBUQUERQUE, N.M. 87109.

DESIGN AGENCY PART NUMBER	REVISION					
	ISSUE	SHEET ZONE	PREPARED BY / DESCRIPTION	DATE	CHKD	APVD
R64936-000	A		D. SAMUEL, 2992/ P. H. HELMICK, 6423	04/23/2001		PHH

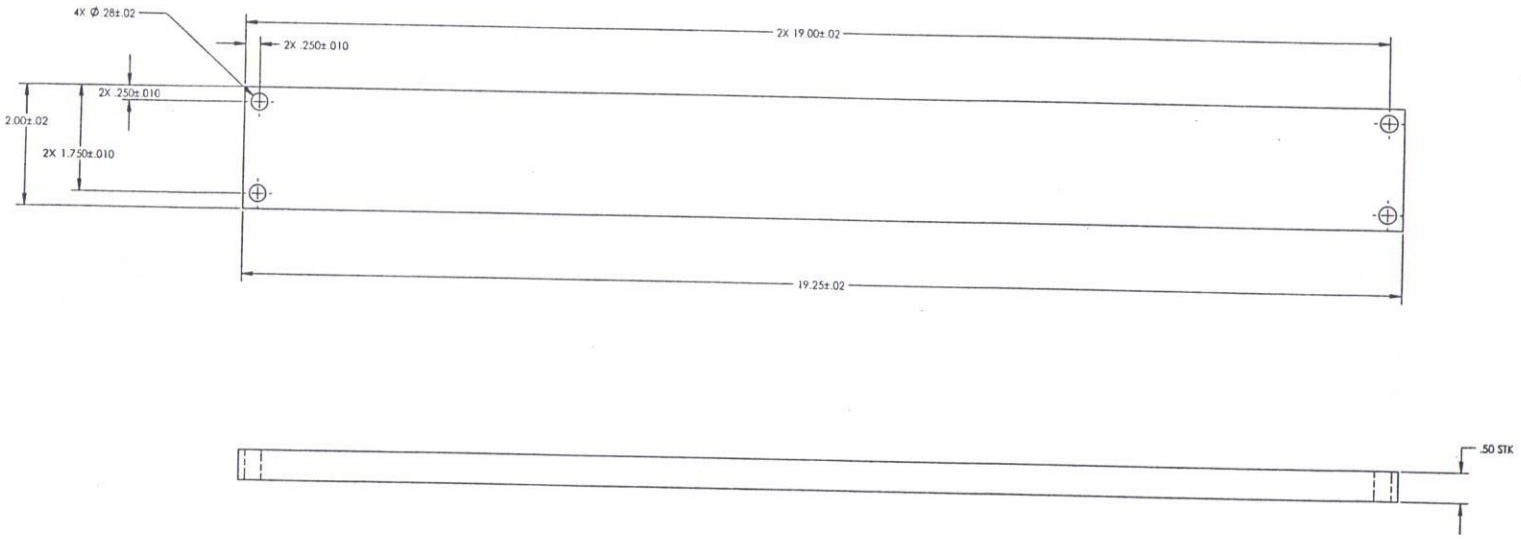

SHEET	1	2	3	4	5	6	TITLE MAIN ARM SPACER, UPPER
ISSUE	A						
PART CLASSIFICATION UNCLASSIFIED							(BUC)
DRAWING CLASSIFICATION UNCLASSIFIED							SIZE D — DRAWING NUMBER R64936
							CAGE 14213 — SCALE 1:1 — SHEET 1 OF 1
DRAWN SA-REL-04/23/2001							ORIGIN SolidWorks 2000

NOTES:

1. GENERAL REQUIREMENTS AND DRAWING INTERPRETATION PER 9900000.
2. MATERIAL TO BE ALUMINUM PLATE. 6061-T6, .500 THK.
3. CERTIFICATION OF MANUFACTURER'S TEST REPORTS (CMTR'S) REQUIRED.
4. APPROX. WEIGHT: 1.8 LBS
5. MAY BE OBTAINED FROM 'RELIANCE METAL CENTER', 6817 JEFFERSON N.E. ALBUQUERQUE, N.M. 87109.

DESIGN AGENCY PART NUMBER	REVISION						
	SCALE	SHEET ZONE	PREPARED BY	DESCRIPTION	DATE	CHK	APVD
R64937-000	A		D. SAMUEL, 2992/ P. H. HELMICK, 6423		03/07/2001		PHHY

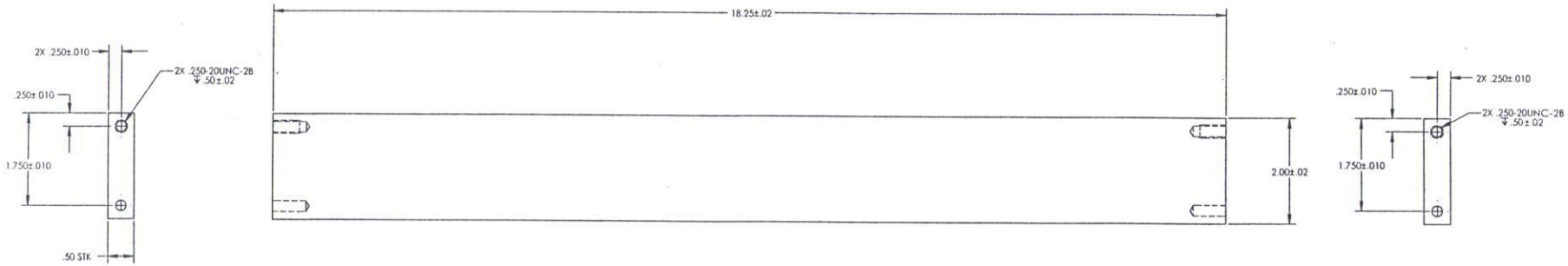

SHEET	1	2	3	4	5	6
ISSUE	A					

TITLE: MAIN ARM SPACER, LOWER (BUC)

PART CLASSIFICATION: UNCLASSIFIED

DRAWING CLASSIFICATION: UNCLASSIFIED

SIZE: D

DRAWING NUMBER: R64937

CAGE: 14213 SCALE: 1:1 SHEET 1 OF 1

BASE: SA-REL-03/07/2001 ORIGIN: SolidWorks 2000

GEOMETRIC PRECISION = NA

NOTES:

1. GENERAL REQUIREMENTS AND DRAWING INTERPRETATION PER 9900000.
2. MATERIAL TO BE ALUMINUM, 6061-T6
3. CERTIFICATION OF MANUFACTURER'S TEST REPORTS (CMTR'S) REQUIRED.
4. APPROX. WEIGHT: 141 LBS
5. MAY BE OBTAINED FROM 'RELIANCE METAL CENTER', 6817 JEFFERSON N.E. ALBUQUERQUE, N.M. 87109.
6. ORIENT HOLES AS SHOWN.
7. WELD AND INSPECT PER 9912117, CLASS II, USING ER4043 ELECTRODES OR RODS PER AWS A5.10-92. 100% PENETRANT INSPECTION.

DESIGN AGENCY PART NUMBER	REVISION					
	ISSUE	SHEET/ZONE	PREPARED BY / DESCRIPTION	DATE	CHKR	APVD
R64939-000	A		D. SAMUEL, 2992/ P. H. HELMICK, 6423	04/19/2001		PHH

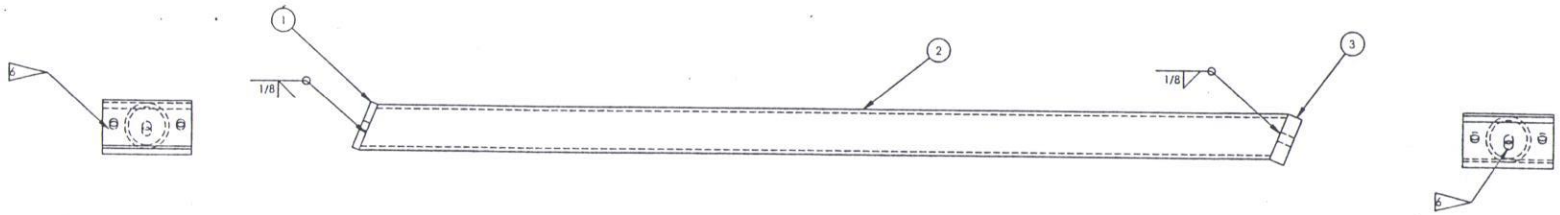

QTY	PART NO	DESCRIPTION	NOTE	ZONE	ITEM
1	R64922-300	SUPPORT LEG LOWER PLATE			3
1	R64922-200	SUPPORT LEG TUBE			2
1	R64922-100	SUPPORT LEG UPPER PLATE			1
NA	9912117	WELDING, ALUMINUM ALLOYS			
NA	9918100	MARKING, GENERAL METHODS			
NA	9900000	GENERAL REQUIREMENTS AND DRAWING INTERPRETATION			

ALT-ALTERNATE AR-AS REQ'D ARS-AS REQ'D PER ASSY EM-EXPENSE MATERIAL NA-DOCUMENT PM-PROCESS MATERIAL

SHEET	1	2	3	4	5	6
ISSUE	A	A				

TITLE: SUPPORT LEG, DRIVE SUPPORT (BUC)

PART CLASSIFICATION: UNCLASSIFIED

DRAWING CLASSIFICATION: UNCLASSIFIED

SIZE: D

DRAWING NUMBER: R64939

CAGE: 14213 SCALE: 1:2 SHEET 1 OF 2

STATUS: SA-REL-04/19/2001

ORIGIN: SolidWorks 2000

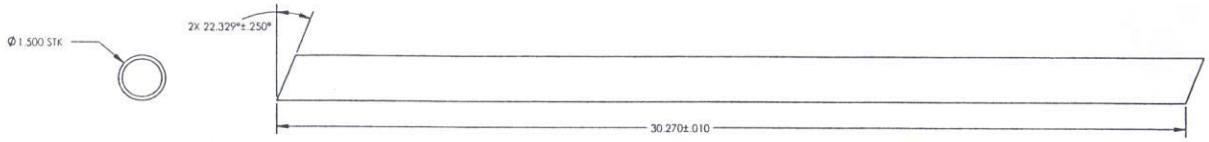

ITEM 2
R64939-200
SUPPORT LEG TUBE
MATERIAL: ALUMINUM, 6061-T6, 1.50 OD, .125 WALL

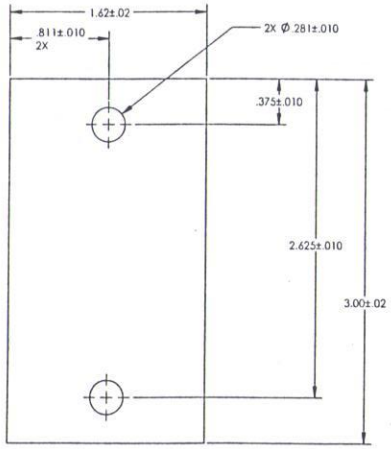

ITEM 1
R64939-100
SUPPORT LEG UPPER PLATE
MATERIAL: ALUMINUM, 6061-T6, .250 THK

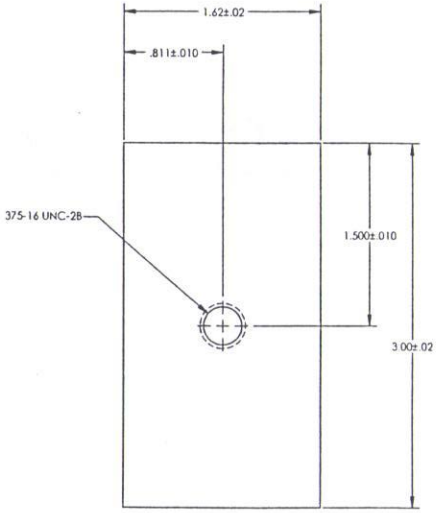

ITEM 3
R64939-300
SUPPORT LEG LOWER PLATE
MATERIAL: ALUMINUM, 6061-T6, .500 THK

DRAWING NUMBER	R64939		
DRAWING CLASSIFICATION	UNCLASSIFIED		
SIZE D	CAGE 14213	SCALE 1:2	
	REVISE A	SHEET 2 OF 2	
STATUS SA-REL-04/19/2001			

NOTES:

1. GENERAL REQUIREMENTS AND DRAWING INTERPRETATION PER 9900000.
2. MATERIAL TO BE 6061-T6 ALUMINUM. .500 THK.
3. CERTIFICATION OF MANUFACTURER'S TEST REPORTS (CMTR'S) REQUIRED.
4. APPROX. WEIGHT: 0.2 LBS
5. MAY BE OBTAINED FROM 'RELIANCE METAL CENTER', 6817 JEFFERSON N.E. ALBUQUERQUE, N.M. 87109.

DESIGN AGENCY PART NUMBER	REVISION: ISSUE	SHEET ZONE	PREPARED BY	DESCRIPTION	DATE	CHKR	APVD
R64940-000	A		D. SAMUEL, 2992/ P.H. HELMICK, 6423		03/12/2001		PHH

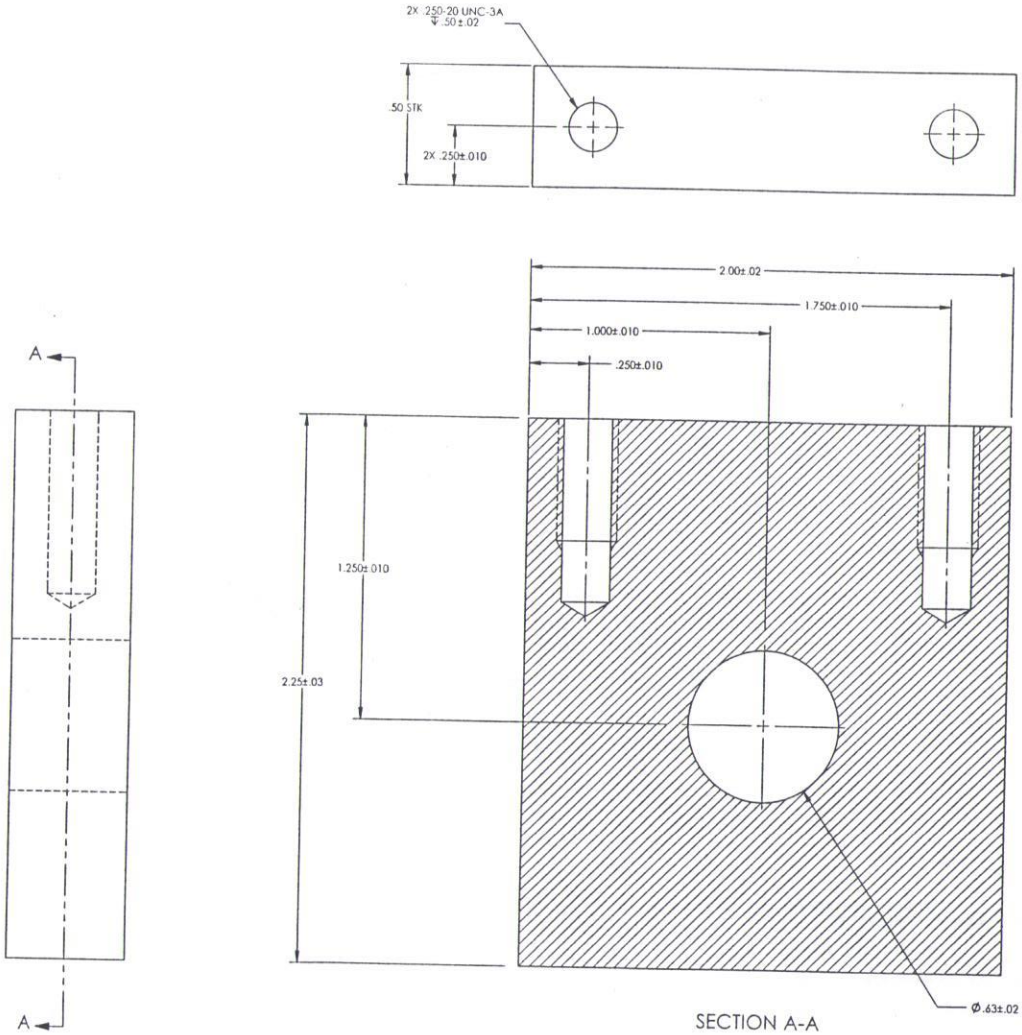

SHEET	1	2	3	4	5	6
ISSUE	A					

TITLE: PIVOT BLOCK, DRIVE SUPPORT (BUC)

PART CLASSIFICATION: UNCLASSIFIED

DRAWING CLASSIFICATION: UNCLASSIFIED

SIZE: D

DRAWING NUMBER: R64940

CAGEC 14213 | SCALE 4:1 | SHEET 1 OF 1

NAME SA-REL-03/12/2001

ORIGIN SolidWorks 2000

NOTES:

1. GENERAL REQUIREMENTS AND DRAWING INTERPRETATION PER 9900000.
2. MATERIAL TO BE 6061-T6 ALUMINUM, .250 THK.
3. CERTIFICATION OF MANUFACTURER'S TEST REPORTS (CMTR'S) REQUIRED.
4. APPROX. WEIGHT: 0.02 LBS
5. MAY BE OBTAINED FROM 'RELIANCE METAL CENTER', 6817 JEFFERSON N.E. ALBUQUERQUE, N.M. 87109.

DESIGN AGENCY PART NUMBER	REVISION					
	ISSUE	SHEET ZONE	PREPARED BY / DESCRIPTION	DATE	CHKD	APVD
R64941-000	A		D. SAMUEL, 2992/ P.H. HELMICK, 6423	05/14/2001		PHH

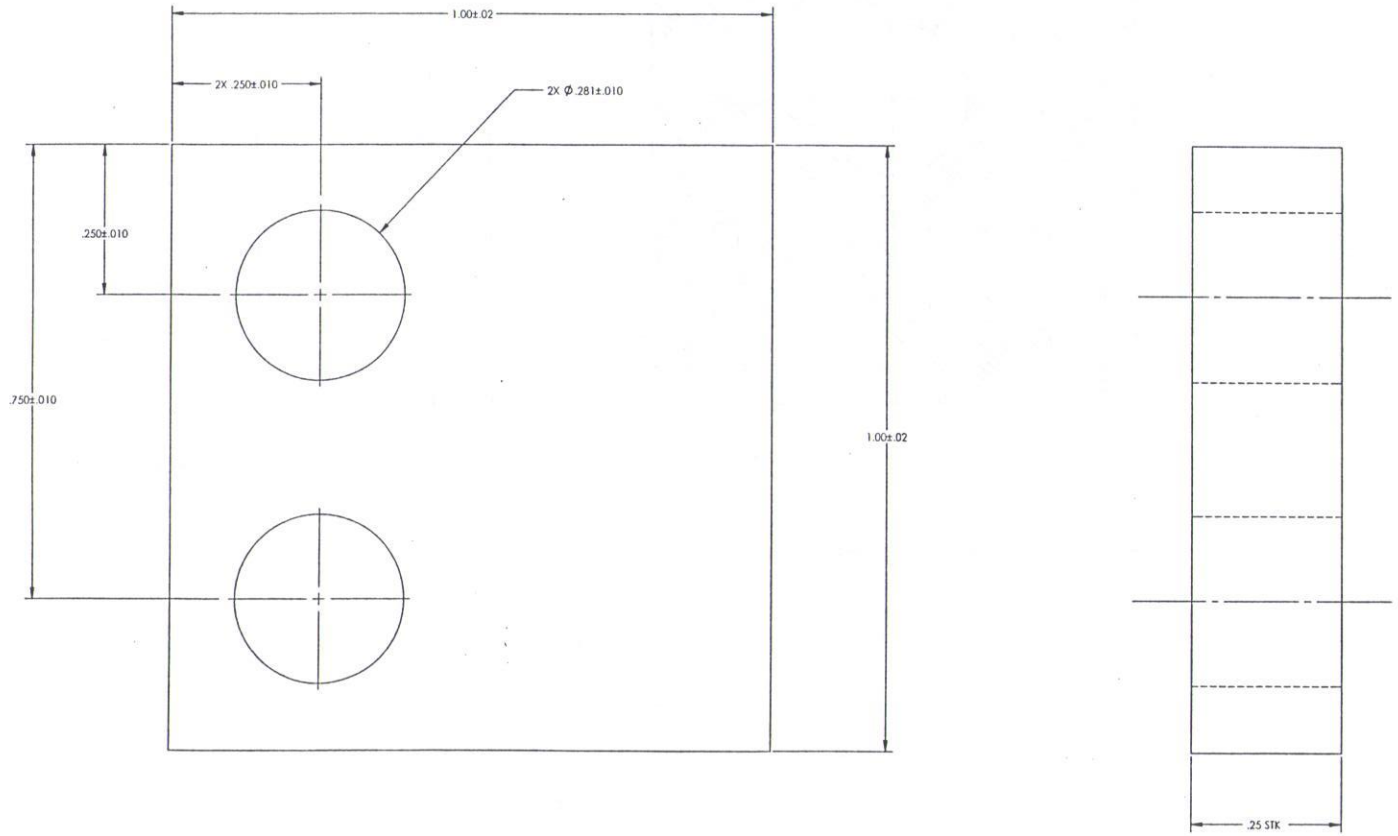

SHEET	1	2	3	4	5	6	TITLE: GUSSET STOP PLATE
ISSUE	A						
PART CLASSIFICATION: UNCLASSIFIED							(BUC)
DRAWING CLASSIFICATION: UNCLASSIFIED					SIZE: D	DRAWING NUMBER: R64941	
					CAGE: 14213	SCALE: 10:1	SHEET 1 OF 1
STATUS: SA-REL-05/14/2001					ORIGIN: SolidWorks 2000		

GEOMETRIC PRECISION INC

NOTES:

1. GENERAL REQUIREMENTS AND DRAWING INTERPRETATION PER 9900000.
2. MATERIAL TO BE 6061-T6 ALUMINUM, 1.00 THK.
3. CERTIFICATION OF MANUFACTURER'S TEST REPORTS (CMTR'S) REQUIRED.
4. APPROX. WEIGHT: 0.225 LBS
5. MAY BE OBTAINED FROM 'RELIANCE METAL CENTER', 6817 JEFFERSON N.E. ALBUQUERQUE, N.M. 87109.

DESIGN AGENCY PART NUMBER	REVISION					
	ISSUE	SHEET ZONE	PREPARED BY / DESCRIPTION	DATE	CHKD	APVD
R64942-000	A		D. SAMUEL, 2992/ P.H. HELMICK, 6423	05/14/2001		PHH

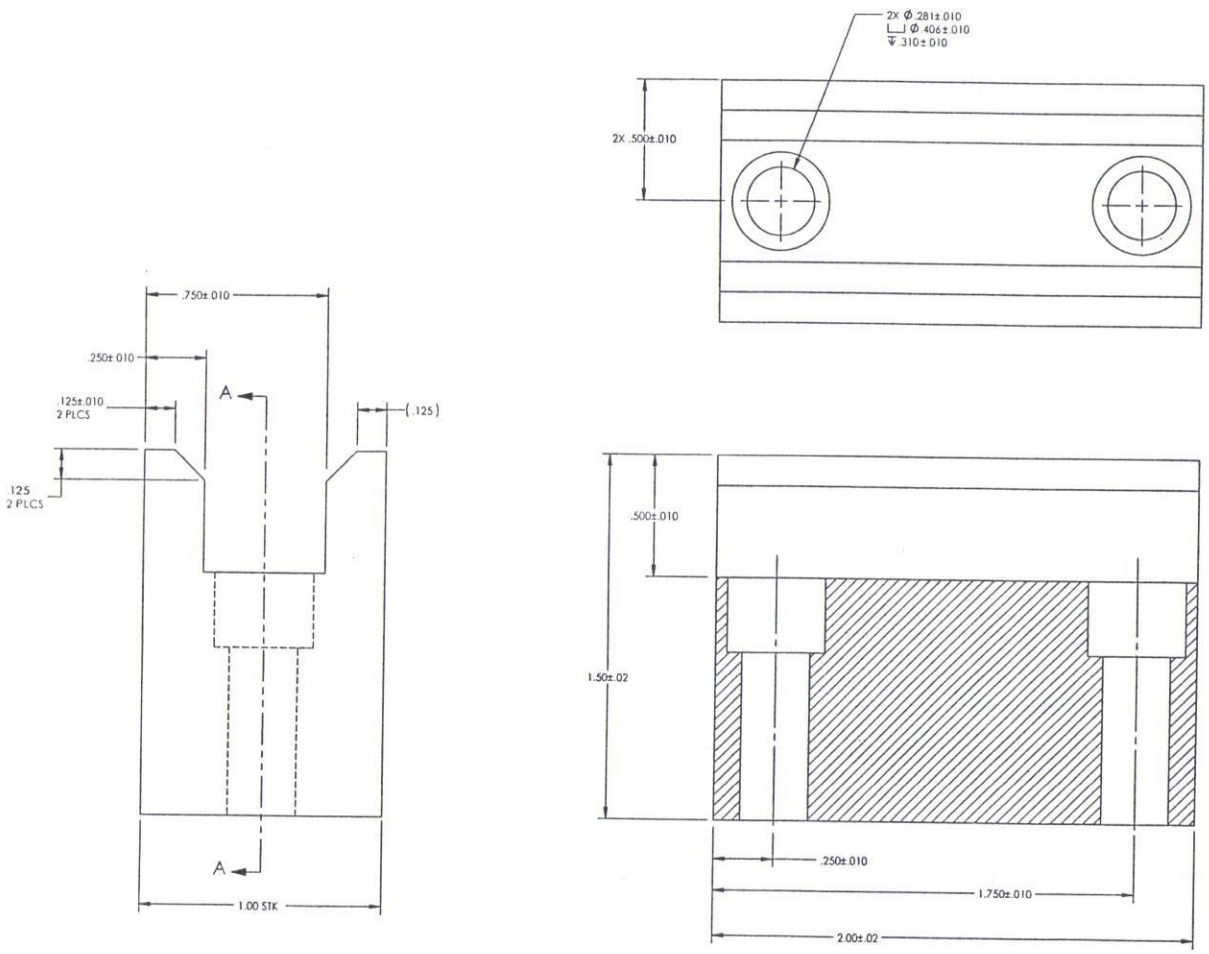

SECTION A-A

SHEET	1	2	3	4	5	6
ISSUE	A					

TITLE: SUPPORT BLOCK, (BUC)

PART CLASSIFICATION: UNCLASSIFIED

DRAWING CLASSIFICATION: UNCLASSIFIED

SIZE: D

DRAWING NUMBER: R64942

CAGE: 14213 SCALE: 4:1 SHEET 1 OF 1

DATUM: SA-REL-05/14/2001

ORIGIN: SolidWorks 2000

NOTES:

1. GENERAL REQUIREMENTS AND DRAWING INTERPRETATION PER 9900000.
2. MATERIAL TO BE 6061-T6 ALUMINUM, .375 THK.
3. CERTIFICATION OF MANUFACTURER'S TEST REPORTS (CMTR'S) REQUIRED.
4. APPROX. WEIGHT: 0.112 LBS
5. MAY BE OBTAINED FROM 'RELIANCE METAL CENTER', 6817 JEFFERSON N.E. ALBUQUERQUE, N.M. 87109.

DESIGN AGENCY PART NUMBER	REVISION ISSUE	SHEET TOTAL	PREPARED BY	DESCRIPTION	DATE	CHKD	APVD
R64943-000	A		D. SAMUEL, 2992/ P.H. HELMICK, 6423		03/14/2001		PHH

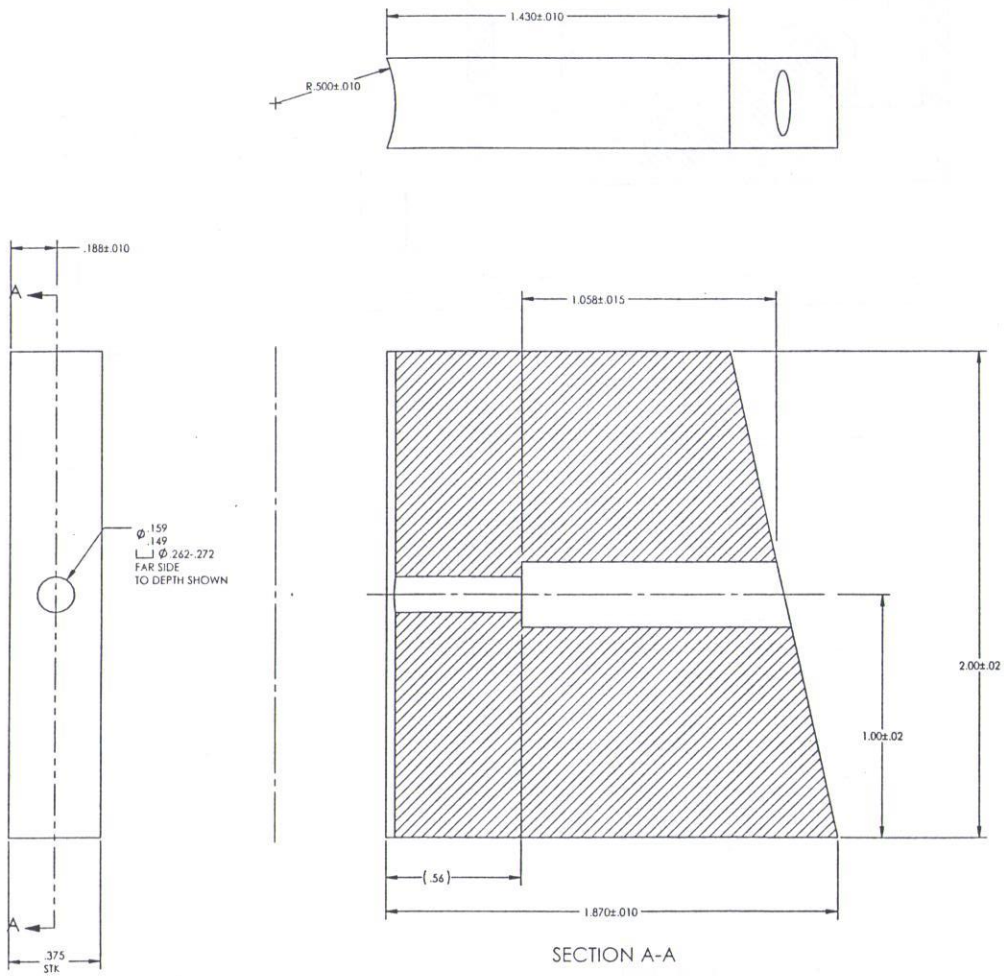

SHEET	1	2	3	4	5	6	TITLE STOP BLOCK
ISSUE	A						
PART CLASSIFICATION UNCLASSIFIED							(BUC
DRAWING CLASSIFICATION UNCLASSIFIED				SIZE D	DRAWING NUMBER R64943		
				CAGE 14213	SCALE 4:1	SHEET 1 OF	
STATUS SA-REL-03/14/2001					ORIGIN SolidWorks 2000		

GEOMETRIC PRECISION

9. Detector Housing

Page	Drawing #	Issue	Title
75	R64900	A	Detector Housing Assembly (U)
76	R64911	B	Upper Detector Tube Anchor
77	R64912	B	Detector Tube Anchor
78	R64914	B	Upper Detector Tube Clamp Plate
79	R64915	B	Detector Tube Assembly
80	R64916	B	Detector Tube Clamp Plate
81	R64917	B	Detector Tube Clamp

NOTES:

1. GENERAL REQUIREMENTS AND DRAWING INTERPRETATION PER 9900000.
2. APPROX. WEIGHT: 6.0 LBS.

DESIGN AGENCY PART NUMBER	REVISION ISSUE	SHEET ZONE	PREPARED BY	DESCRIPTION	DATE	CHKD	APVD
R64900-000	A		D. SAMUEL, 2992/ P. H. HELMICK, 6423		1/14/2002		

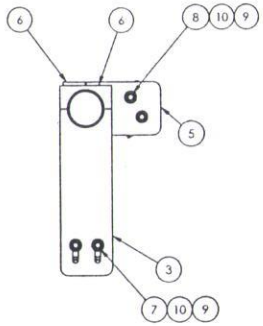

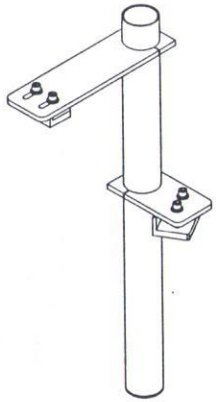

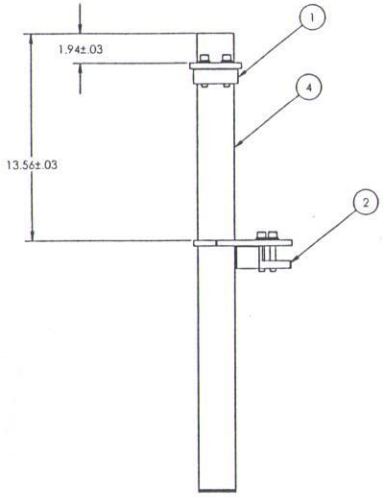

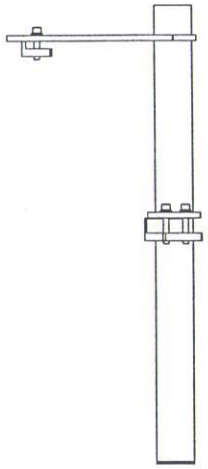

QTY	PART NO	DESCRIPTION	NOTE	ZONE	ITEM
4		WASHER, STAINLESS, LOCK, .375 DIA			10
4		WASHER, FLAT, .375 DIA			9
2		SCREW, CAP, SOC HD, STAINLESS, .375-24UNF-2A, 2.25 LG			8
2		SCREW, CAP, SOC HD, STAINLESS, .375-24UNF-2A, 1.75 LG			7
2	R61917-000	DETECTOR TUBE CLAMP			6
1	R64916-000	DETECTOR TUBE CLAMP PLATE			5
1	R64915-000	DETECTOR TUBE ASSEMBLY			4
1	R64914-000	UPPER DETECTOR TUBE CLAMP PLATE			3
1	R64912-000	DETECTOR TUBE ANCHOR PLATE			2
1	R64911-000	UPPER DETECTOR TUBE ANCHOR			1
NA	9919100	MARKING, GENERAL METHODS			
NA	9900000	GENERAL REQUIREMENTS AND DRAWING INTERPRETATION			

ALT-ALTERNATE AR-AS REQ'D ARS-AS REQ'D PER ASSY EM-EXPENSE MATERIAL NA-DOCUMENT PM-PROCESS MATERIAL

SHEET	1	2	3	4	5	6
ISSUE	A					

TITLE: DETECTOR HOUSING ASSEMBLY (U)

PART CLASSIFICATION: UNCLASSIFIED

DRAWING CLASSIFICATION: UNCLASSIFIED

SIZE: D

DRAWING NUMBER: R64900

CAGE: 14213 SCALE: 1:4 SHEET 1 OF 1

STATUS: SA-REL-1/14/2002

ORIGIN: SA-SolidWorks 2001

GEOMETRIC PRECISION = NA

NOTES:

1. GENERAL REQUIREMENTS AND DRAWING INTERPRETATION PER 9900000.
2. MATERIAL TO BE ALUMINUM PLATE, 6061-T6 OR T651.
3. CERTIFICATION OF MANUFACTURER'S TEST REPORTS (CMTR'S) REQUIRED.
4. APPROX. WEIGHT: 0.3 LBS
5. MAY BE OBTAINED FROM 'RELIANCE METAL CENTER', 6817 JEFFERSON N.E. ALBUQUERQUE, N.M. 87109.

DESIGN AGENCY PART NUMBER: R64911-000

REVISION

ISSUE	SHEET ZONE	PREPARED BY / DESCRIPTION	DATE	CHKD	APVD
A		D. SAMUEL, 2992/P. H. HELMICK 6423	1/03/2002		PHH
B		D. SAMUEL, 2992/ P. H. HELMICK, 6423 ADDED "OR T651" TO NOTE 2.	2/1/2002		PHH

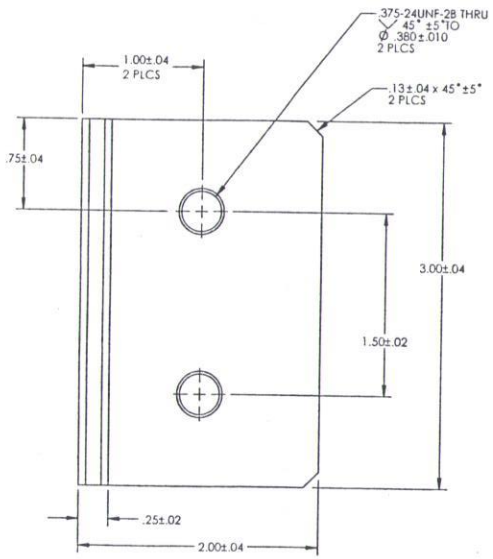

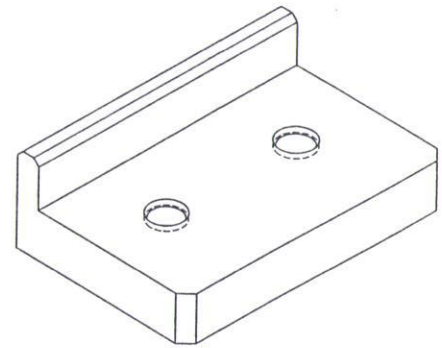

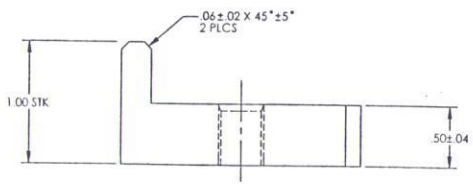

SHEET	1	2	3	4	5	6
ISSUE	B					

TITLE: UPPER DETECTOR TUBE ANCHOR (BUC)

PART CLASSIFICATION: UNCLASSIFIED

DRAWING CLASSIFICATION: UNCLASSIFIED

SIZE: D

DRAWING NUMBER: R64911

CAGE: 14213 SCALE: 2:1 SHEET 1 OF 1

STATUS: SA-REL-2/1/2002

DRAWN: SA-SolidWorks 2001

NOTES:

1. GENERAL REQUIREMENTS AND DRAWING INTERPRETATION PER 9900000.
2. MATERIAL TO BE ALUMINUM PLATE, 6061-T6 OR T651.
3. CERTIFICATION OF MANUFACTURER'S TEST REPORTS (CMTR'S) REQUIRED.
4. APPROX. WEIGHT: 0.4 LBS
5. MAY BE OBTAINED FROM 'RELIANCE METAL CENTER', 6817 JEFFERSON N.E. ALBUQUERQUE, N.M. 87109.

DESIGN AGENCY PART NUMBER: R64912-000

REVISION

ISSUE	SHEET ZONE	PREPARED BY	DESCRIPTION	DATE	CHKD	APVD
A		D. SAMUEL, 2992/ P. H. HELMICK, 6423		1/14/2002		PH
B		D. SAMUEL, 2992/ P. H. HELMICK, 6423	ADDED "OR T651" TO NOTE 2.	2/1/2002		PH

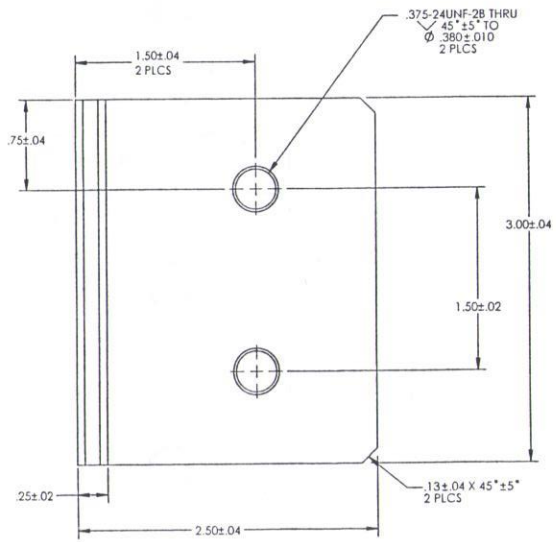

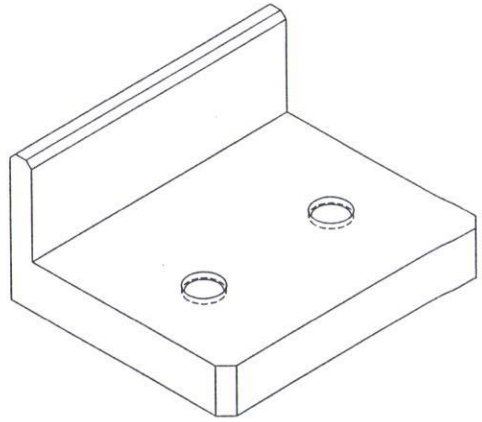

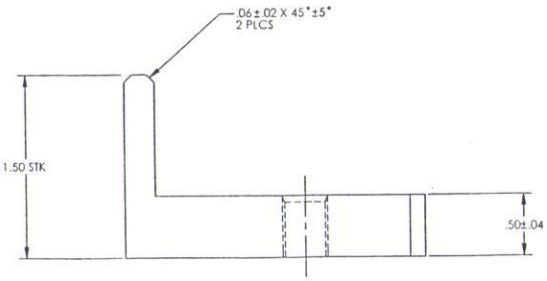

SHEET	1	2	3	4	5	6
ISSUE	B					

TITLE: DETECTOR TUBE ANCHOR

PART CLASSIFICATION: UNCLASSIFIED

DRAWING CLASSIFICATION: UNCLASSIFIED

SIZE: D

DRAWING NUMBER: R64912

CAGE: 14213 SCALE: 2:1 SHEET 1 OF

DRAWN: SA-REL-2/1/2002

CHECKED: SA-SolidWorks 2001

GEOMETRIC PRECISION INC.

NOTES:

1. GENERAL REQUIREMENTS AND DRAWING INTERPRETATION PER 9900000.
2. MATERIAL TO BE ALUMINUM PLATE, 6061-T6 OR T651. .375 THK.
3. CERTIFICATION OF MANUFACTURER'S TEST REPORTS (CMTR'S) REQUIRED.
4. APPROX. WEIGHT: 1.3 LBS
5. MAY BE OBTAINED FROM 'RELIANCE METAL CENTER'. 6817 JEFFERSON N.E. ALBUQUERQUE, N.M. 87109.

DESIGN AGENCY PART NUMBER: R64914-000

REVISION

ISSUE	SHEET ZONE	PREPARED BY	DESCRIPTION	DATE	CHKD	APVD
A		D. SAMUEL 2992/P.H HELMICK. 6423		1/14/2002		PHH
B		D. SAMUEL. 2992/ P. H. HELMICK. 6423	CHANGE: R1.258 WAS R1.250 ADDED 'OR T651' TO NOTE 2	2/1/2002		PHH

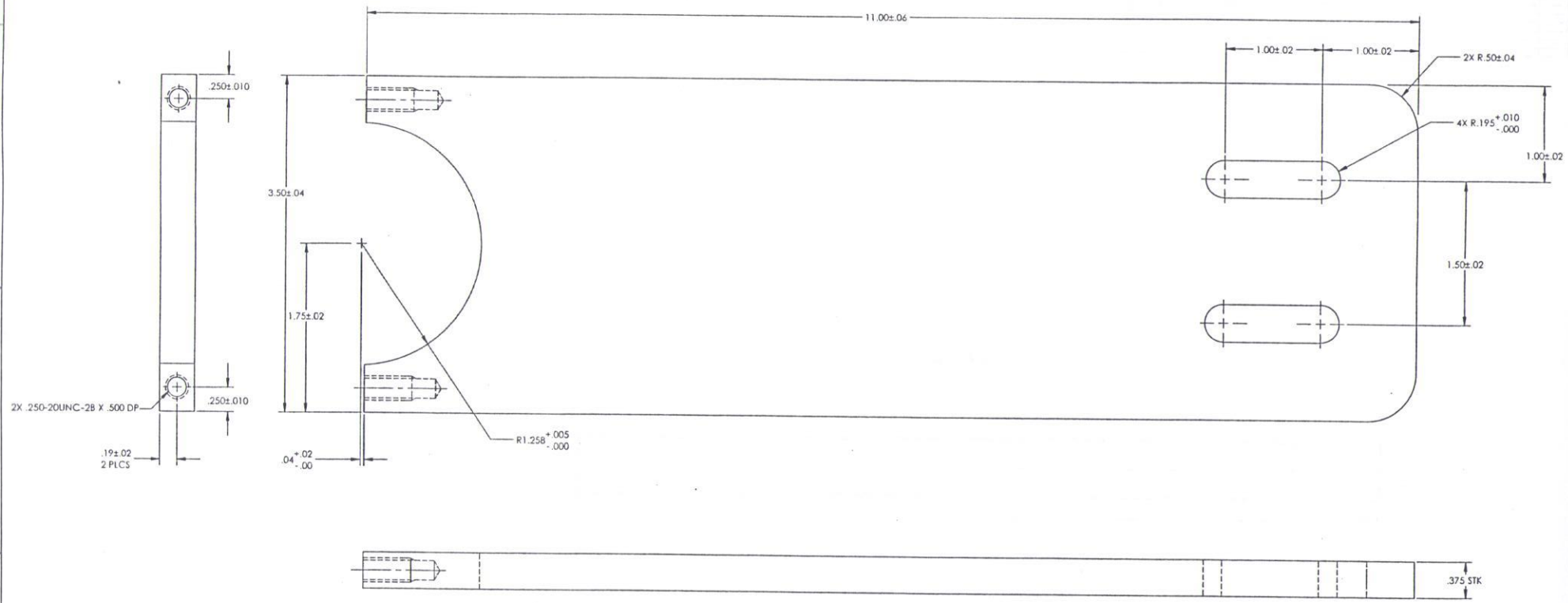

SHEET	1	2	3	4	5	6	TITLE: UPPER DETECTOR TUBE CLAMP PLA
ISSUE	B						
PART CLASSIFICATION: UNCLASSIFIED							
DRAWING CLASSIFICATION: UNCLASSIFIED							SIZE: D — DRAWING NUMBER: R64914
							CAGE: 14213 — SCALE: 2:1 — SHEET 1 OF
SAVED: SA-PEL-2/1/2002							ORIGIN: SA-SolidWorks 2001

NOTES:

1. GENERAL REQUIREMENTS AND DRAWING INTERPRETATION PER 9900000.
2. CERTIFICATION OF MANUFACTURER'S TEST REPORTS (CMTR'S) REQUIRED.
3. APPROX. WEIGHT: 2.8 LBS
4. MAY BE OBTAINED FROM 'RELIANCE METAL CENTER', 6817 JEFFERSON N.E. ALBUQUERQUE, N.M. 87109.
5. WELD AND INSPECT PER 9912117, CLASS II, USING ER4043 ELECTRODES OR RODS PER AWS A5.10-92.

DESIGN AGENCY PART NUMBER	ISSUE	SHEET ZONE	PREPARED BY / DESCRIPTION	DATE	CHKD	APVD
R64915-000	A		D. SAMUEL,2992/ P. H. HELMICK. 6423	1/14/2002		PHH
	B		D. SAMUEL, 2992/ P. H. HELMICK. 6423 REMOVED NOTE 2 RENUMBERED NOTES 3-6 ADDED "OR T651" TO ITEM 1 MATERIAL CHANGED ITEM 2 MATL 6511 "WAS" 6061	2/1/2002		PHH

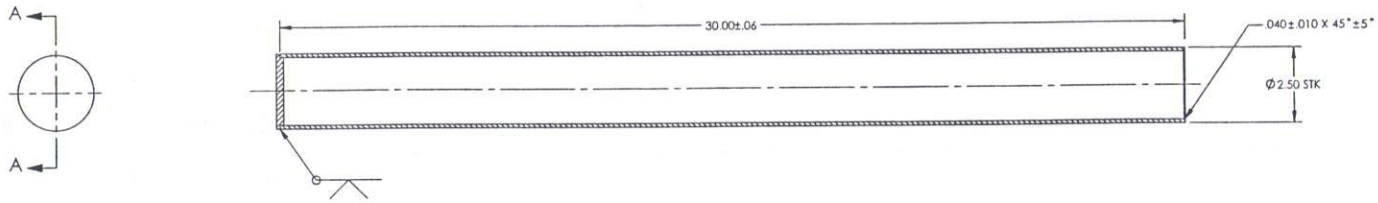

SECTION A-A

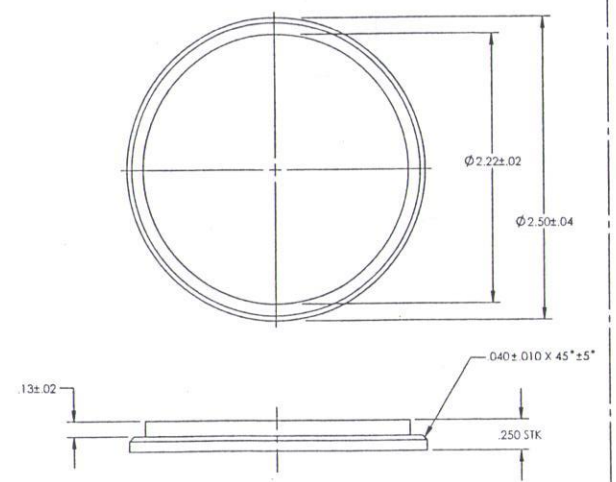

DETAIL: ITEM 1
R64915-100
DETECTOR CAP
SCALE: 2/1
MATERIAL: ALUMINUM, 6061-T6 OR T651, .250 THK

QTY	PART NO	DESCRIPTION	NOTE	ZONE	ITEM
1	R64915-200	TUBE, ALUMINUM 6061-T6511, 2.50 OD, .125 WALL, 30.00 LG			2
1	R64915-100	PLATE, ALUMINUM, 6061-T6 OR T651, .250 THK			1
NA	9912117	WELDING, ALUMINUM ALLOYS			
NA	9919100	MARKING, GENERAL METHODS			
NA	9900000	GENERAL REQUIREMENTS AND DRAWING INTERPRETATION			

ALT-ALTERNATE AR-AS REQ'D ARS-AS REQ'D PER ASSY EM-EXPENSE MATERIAL NA-DOCUMENT PM-PROCESS MATERIAL

SHEET	1	2	3	4	5	6
ISSUE	B					

TITLE: DETECTOR TUBE ASSEMBLY

PART CLASSIFICATION: UNCLASSIFIED

DRAWING CLASSIFICATION: UNCLASSIFIED

SIZE: D

DRAWING NUMBER: R64915

CAGE: 14213 SCALE: 1:2 SHEET 1 OF

STATUS: SA-REL-2/1/2002

DRAWN: SA-SolidWorks 2001

GEOMETRIC PRECISION SYSTEM

NOTES:

1. GENERAL REQUIREMENTS AND DRAWING INTERPRETATION PER 9900000.
2. MATERIAL TO BE ALUMINUM PLATE. 6061-T6 OR T651. .375 THK.
3. CERTIFICATION OF MANUFACTURER'S TEST REPORTS (CMTR'S) REQUIRED.
4. APPROX. WEIGHT: 0.5 LBS
5. MAY BE OBTAINED FROM 'RELIANCE METAL CENTER'. 6817 JEFFERSON N.E. ALBUQUERQUE, N.M. 87109.

DESIGN AGENCY PART NUMBER	REVISION					
	ISSUE	SHEET ZONE	PREPARED BY / DESCRIPTION	DATE	CHKD	APVD
R64916-000	A		D. SAMUEL. 2992/P. H. HELMICK. 6423	1/14/2002		PHH
	B		D. SAMUEL. 2992/ P. H. HELMICK. 6423 CHANGED: R1.258'WAS'R1.250 ADDED 'OR T651' TO NOTE 2	2/1/2002		PHH

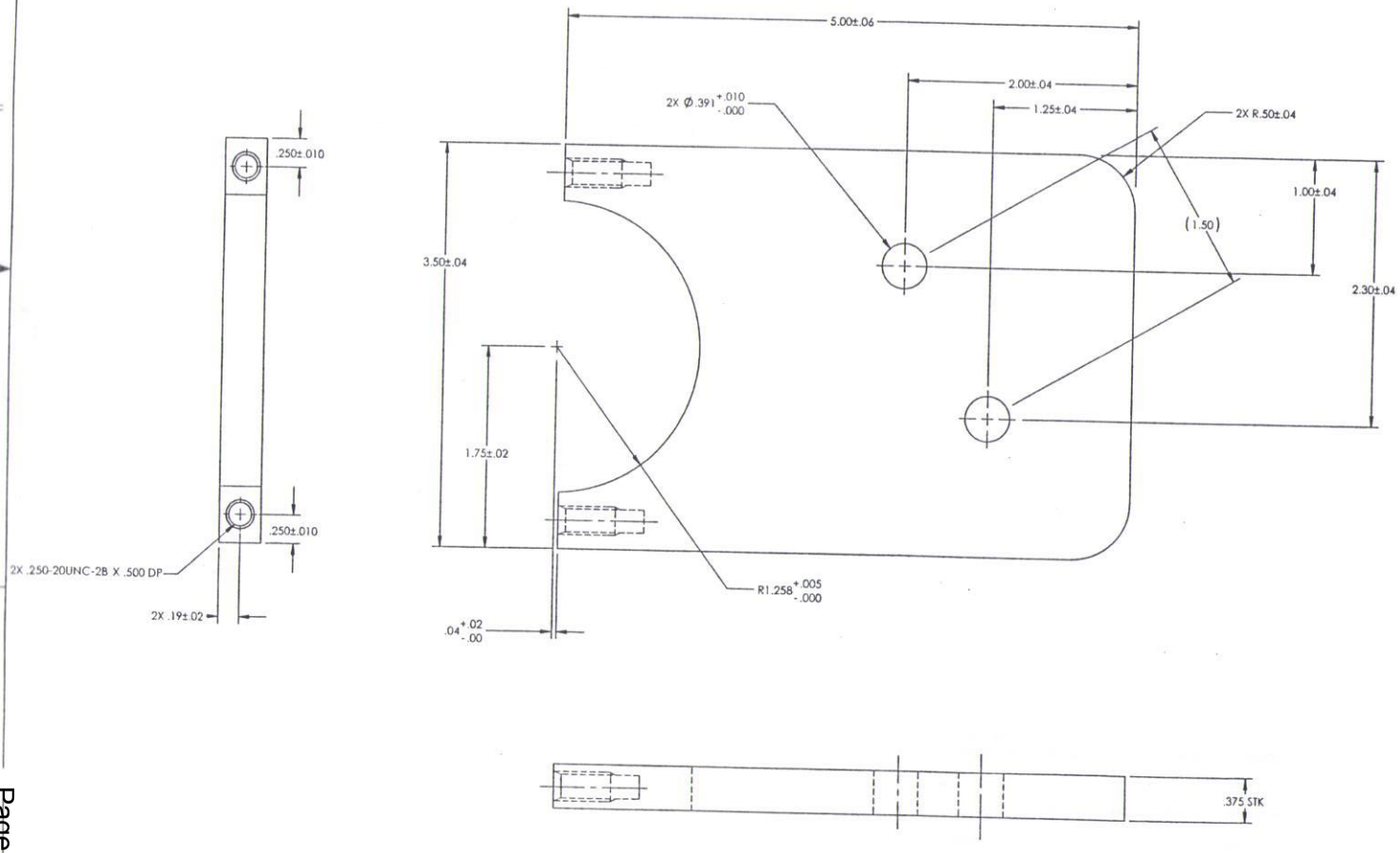

SHEET	1	2	3	4	5	6
ISSUE	B					

TITLE: DETECTOR TUBE CLAMP PLATE (BUC)

PART CLASSIFICATION: UNCLASSIFIED

DRAWING CLASSIFICATION: UNCLASSIFIED

SIZE: D

DRAWING NUMBER: R64916

CAGE: 14213 SCALE: 2:1 SHEET 1 OF 1

DATE: SA-REL-2/1/2002

DRAWN: SA-SolidWorks 2001

NOTES:

1. GENERAL REQUIREMENTS AND DRAWING INTERPRETATION PER 9900000.
2. MATERIAL TO BE ALUMINUM PLATE, 6061-T6 OR T651, .375 THK.
3. CERTIFICATION OF MANUFACTURER'S TEST REPORTS (CMTR'S) REQUIRED.
4. APPROX. WEIGHT: 0.09 LBS
5. MAY BE OBTAINED FROM 'RELIANCE METAL CENTER', 6817 JEFFERSON N.E. ALBUQUERQUE, N.M. 87109.

DESIGN AGENCY PART NUMBER: R64917-000

REVISION

ISSUE	SHEET ZONE	PREPARED BY	DESCRIPTION	DATE	CHK	APVD
A		D. SAMUEL 2992/P. H. HELMICK. 6423		1/14/2002		PHH
B		D. SAMUEL. 2992/ P. H. HELMICK. 6423	ADDED 'OR T651' TO NOTE 2	2/1/2002		PHH

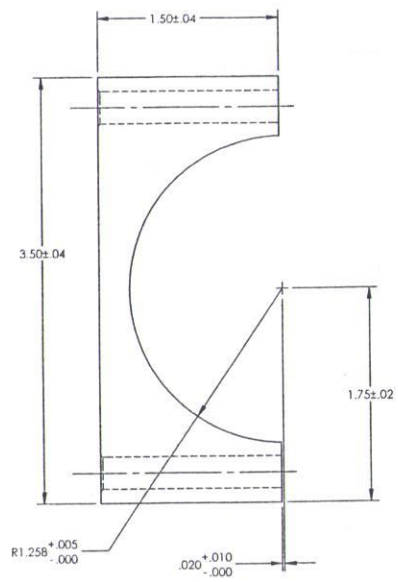

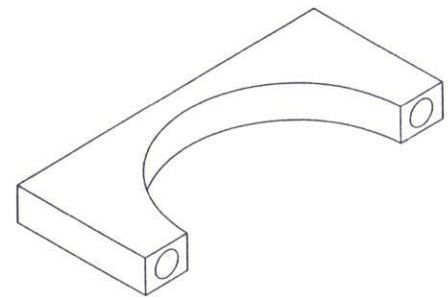

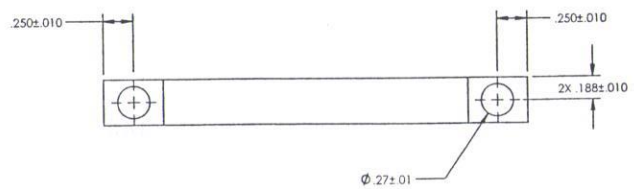

SHEET	1	2	3	4	5	6
ISSUE	B					

TITLE: DETECTOR TUBE CLAMP

PART CLASSIFICATION: UNCLASSIFIED

DRAWING CLASSIFICATION: UNCLASSIFIED

SIZE: D

DRAWING NUMBER: R64917

CAGE: 14213 SCALE: 2:1 SHEET 1 OF

FORM: SA-REL-2/1/2002

DRAWN: SA-SolidWorks 2001

10. Hydro-Brake

Page	Drawing #	Issue	Title
83	R64901	A	Hydro Brake Assembly (U)
84	R64902	A	Hydro, Lower Support, 2.8 Pitch
85	R64903	A	Hydro, Lower Support, 2.0 Pitch
86	R64904	B	Hydro Tube End Cap Locking Pin
87	R64909	B	Hydro Tube
88	R64910	B	Hydro Tube End Cap (U)

NOTES:

1. GENERAL REQUIREMENTS AND DRAWING INTERPRETATION PER 9900000.
2. APPROX. WEIGHT: 0.4 LBS.

DESIGN AGENCY PART NUMBER	ISSUE	SHEET ZONE	PREPARED BY	DESCRIPTION	DATE	CHKD	APVD
R64901-000	A		D. SAMUEL, 2992/ P. H. HELMICK, 6423		1/16/2002		

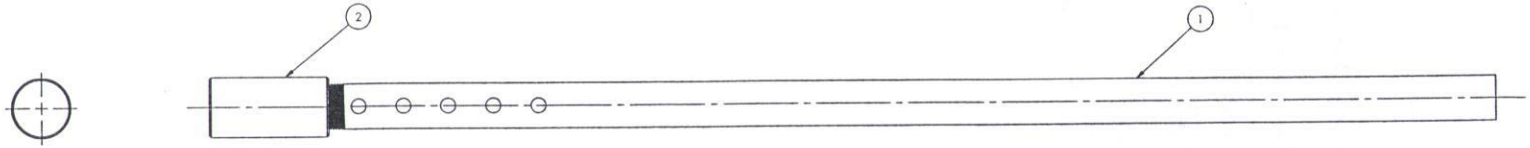

QTY	PART NO	DESCRIPTION	NOTE	ZONE	ITEM
1	R64910-000	HYDRO TUBE END CAP			2
1	R64909-000	HYDRO TUBE			1
NA	9919100	MARKING, GENERAL METHODS			
NA	9900000	GENERAL REQUIREMENTS AND DRAWING INTERPRETATION			

ALT-ALTERNATE AR-AS REQ'D ARS-AS REQ'D PER ASSY EM-EXPENSE MATERIAL NA-DOCUMENT PM-PROCESS MATERIAL

SHEET	1	2	3	4	5	6
ISSUE	A					

TITLE: HYDRO BRAKE ASSEMBLY (U)

PART CLASSIFICATION: UNCLASSIFIED

DRAWING CLASSIFICATION: UNCLASSIFIED

SIZE: D

DRAWING NUMBER: R64901

CAGE: 14213 SCALE: 1:1 SHEET 1 OF 1

SA-REL-1/16/2002

SA-SolidWorks 2001

NOTES:

1. GENERAL REQUIREMENTS AND DRAWING INTERPRETATION PER 9900000.
2. MATERIAL TO BE ALUMINUM PLATE . 6061-T651, .250 THK. PER ASTM B-209.
3. CERTIFICATION OF MANUFACTURER'S TEST REPORTS (CMTR'S) REQUIRED.
4. APPROX. WEIGHT: 1.16 LBS
5. MAY BE OBTAINED FROM 'RELIANCE METAL CENTER', 6817 JEFFERSON N.E. ALBUQUERQUE, N.M. 87109.

DESIGN AGENCY PART NUMBER	REVISION						
	BASE	SHEET ZONE	PREPARED BY	DESCRIPTION	DATE	CHK	APVD
R64902-000	A		D. SAMUEL. 2992/ P. H. HELMICK. 6423		2/11/2002		PHH

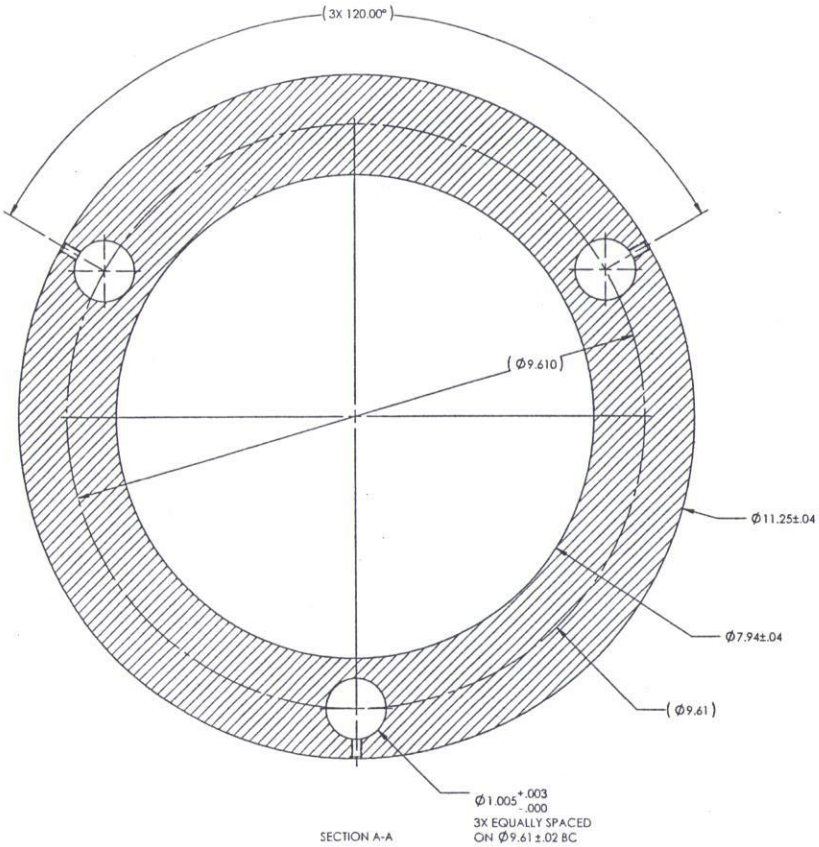

SECTION A-A

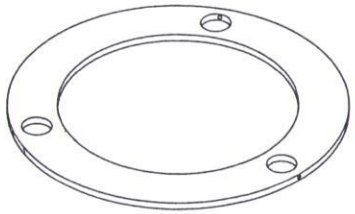

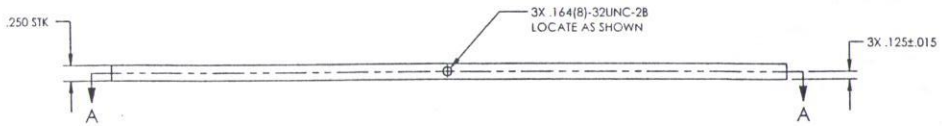

SHEET	1	2	3	4	5	6
ISSUE	A					

TITLE: HYDRO, LOWER SUPPORT, 2.8 PITCH (BUC)

PART CLASSIFICATION: UNCLASSIFIED

DRAWING CLASSIFICATION: UNCLASSIFIED

SIZE: D

DRAWING NUMBER: R64902

CAGE: 14213 | SCALE: 1:1 | SHEET 1 OF 1

BASE: SA-REL-2/11/2002 | ORIGIN: SA-SolidWorks 2001

NOTES:

1. GENERAL REQUIREMENTS AND DRAWING INTERPRETATION PER 9900000.
2. MATERIAL TO BE ALUMINUM PLATE , 6061-T651, .250 THK. PER ASTM B-209.
3. CERTIFICATION OF MANUFACTURER'S TEST REPORTS (CMTR'S) REQUIRED.
4. APPROX. WEIGHT: 0.95 LBS
5. MAY BE OBTAINED FROM 'RELIANCE METAL CENTER', 6817 JEFFERSON N.E. ALBUQUERQUE, N.M. 87109.

DESIGN AGENCY PART NUMBER	REVISION ISSUE	SHEET ZONE	PREPARED BY	DESCRIPTION	DATE	CHKD	APVD
R64903-000	A		D. SAMUEL 2992/ P. H. HELMICK 6423		2/11/2002		PHH

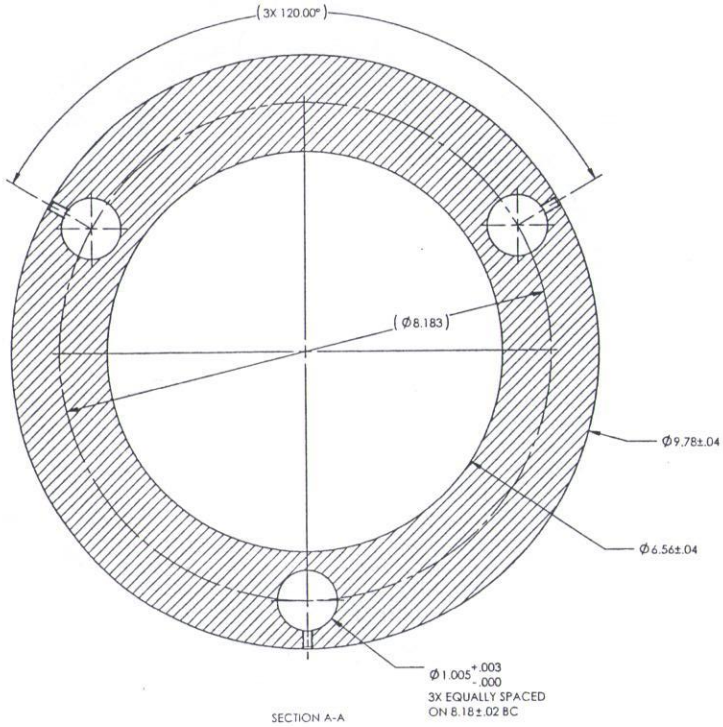

SECTION A-A

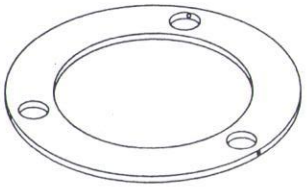

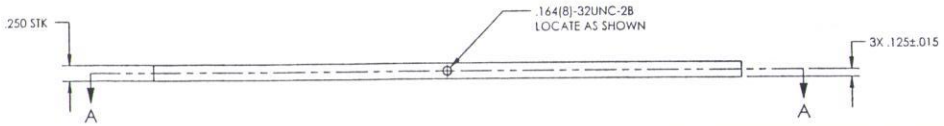

SHEET	1	2	3	4	5	6
ISSUE	A					

TITLE: HYDRO, LOWER SUPPORT, 2.0 PITCH (BUC

PART CLASSIFICATION: UNCLASSIFIED

DRAWING CLASSIFICATION: UNCLASSIFIED

SIZE: D | DRAWING NUMBER: R64903

CAGE: 14213 | SCALE: 1:1 | SHEET 1 OF

STATUS: SA-REL-2/11/2002 | ORIGIN: SA-SolidWorks 2001

NOTES:

1. GENERAL REQUIREMENTS AND DRAWING INTERPRETATION PER 9900000.
2. MATERIAL TO BE SCREW, SOC HD CAP, STAINLESS, .164(8)-32UNC-2A, .375 LG.
3. APPROX. WEIGHT: 0.004 LBS
4. MAY BE OBTAINED FROM 'BARNHILL BOLT CO.', 2500 PRINCETON N.E. ALBUQUERQUE, N.M. 87107.

DESIGN AGENCY PART NUMBER: R64904-000

REVISION

ISSUE	SHEET ZONE	PREPARED BY	DESCRIPTION	DATE	CHKD	APVD
A		D. SAMUEL, 2992/ P. H. HELMICK, 6423		2/11/2002		PHH
B		D. SAMUEL, 2992/ P. H. HELMICK, 6423	REMOVED NOTE 3. RENUMBERED NOTES 4 & 5	2/28/2002		PHH

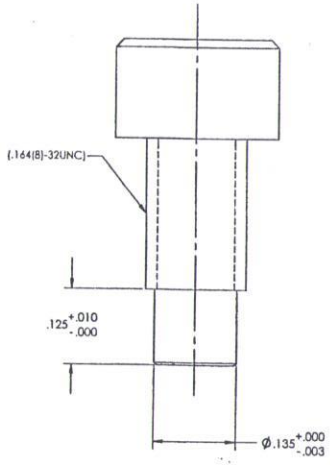

SHEET	1	2	3	4	5	6
ISSUE	B					

TITLE: HYDRO TUBE END CAP LOCKING PIN

PART CLASSIFICATION: UNCLASSIFIED

DRAWING CLASSIFICATION: UNCLASSIFIED

SIZE: D

DRAWING NUMBER: R64904

CAGE: 14213 SCALE: 10:1 SHEET 1 OF 1

STATUS: SA-REL-2/28/2002

ORIGIN: SA-SolidWorks 2001

GEOMETRIC PRECISION + INC

NOTES:

1. GENERAL REQUIREMENTS AND DRAWING INTERPRETATION PER 99000000.
2. MATERIAL TO BE ALUMINUM TUBE, 6061-T6, .75 DIA, .083 WALL, PER ASTM B-210.
3. CERTIFICATION OF MANUFACTURER'S TEST REPORTS (CMTR'S) REQUIRED.
4. APPROX. WEIGHT: 0.3 LBS
5. MAY BE OBTAINED FROM 'RELIANCE METAL CENTER', 6817 JEFFERSON N.E. ALBUQUERQUE, N.M. 87109.

6 REMOVE BURRS INSIDE THE INNER EDGE OF THESE HOLES.

7 THIS AREA TO BE CONTROLLED.

DESIGN AGENCY PART NUMBER: R64909-000

REVISION

ISSUE	SHEET ZONE	PREPARED BY	DESCRIPTION	DATE	CHKD	APVD
A		D. SAMUEL, 2992/ P.H. HELMICK, 6423		1/21/2002		PH
B	B3 B4	D. SAMUEL, 2992/ P. H. HELMICK, 6423	CHANGE: 26.75 'WAS' 26.63 ADDED .13 TO HOLE LOCATIONS	2/5/2002		PH

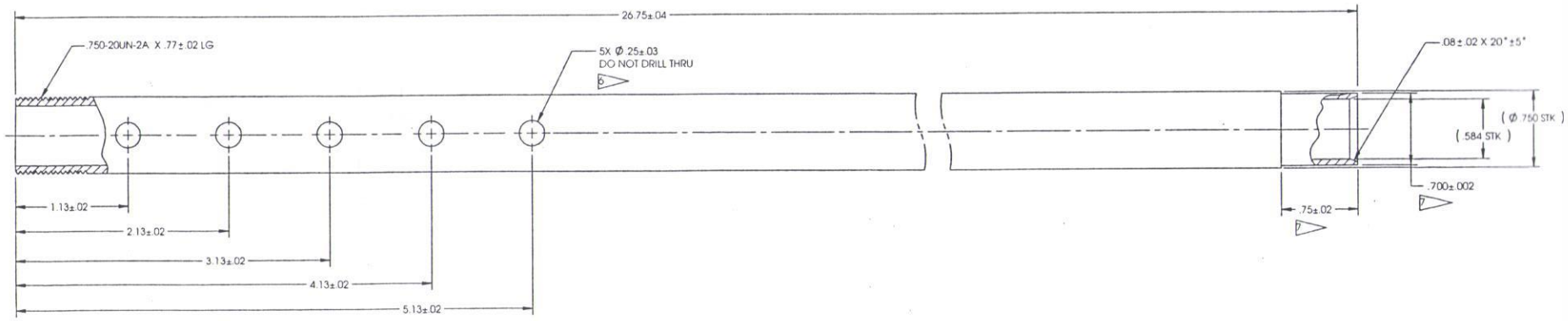

SHEET	1	2	3	4	5	6
ISSUE	B					

TITLE: HYDRO TUBE

PART CLASSIFICATION: UNCLASSIFIED

DRAWING CLASSIFICATION: UNCLASSIFIED

SIZE: D

DRAWING NUMBER: R64909

CAGE: 14213 SCALE: 2:1 SHEET 1 OF

STATUS: SA-REL-2/5/2002

CADSW: SA-SolidWorks 2001

(BU

GEOMETRIC PRECISION, Inc.

NOTES:

1. GENERAL REQUIREMENTS AND DRAWING INTERPRETATION PER 9900000.
2. MATERIAL TO BE ALUMINUM ROD, 6061-T6511, PER ASTM B-211, 1.00 DIA.
3. CERTIFICATION OF MANUFACTURER'S TEST REPORTS (CMTR'S) REQUIRED.
4. APPROX. WEIGHT: 0.1 LBS
5. MAY BE OBTAINED FROM 'RELIANCE METAL CENTER', 6817 JEFFERSON N.E. ALBUQUERQUE, N.M. 87109.

DESIGN AGENCY PART NUMBER
R64910-000

REVISION

ISSUE	SHEET ZONE	PREPARED BY	DESCRIPTION	DATE	CHKD	APVD
A		D. SAMUEL 2992/ P.H. HELMICK 6423		1/16/2002		PHH
B		D. SAMUEL 2992/ P. H. HELMICK 6423	CHANGED: 2.32 'WAS' 2.26 .107 ± .015 'WAS' .11 ± .02 .546/ .545 'WAS' .546 ± .002 1.680 'WAS' 1.63 ADDED PILOT HOLE	2/5/2002		PHH

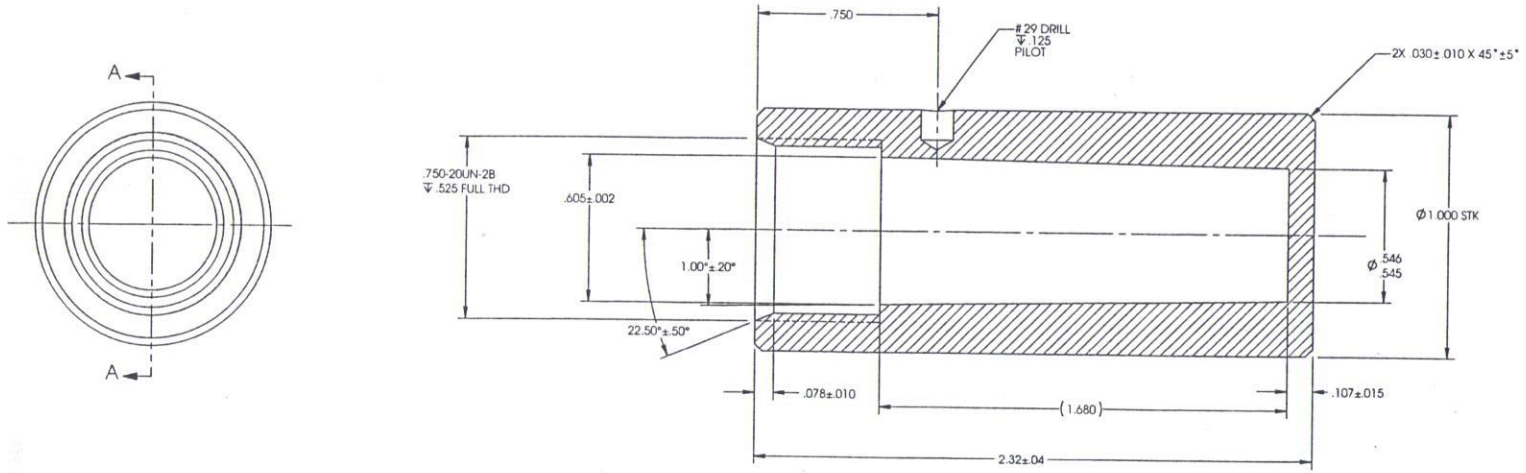

SECTION A-A

SHEET	1	2	3	4	5	6
ISSUE	B					

PART CLASSIFICATION: UNCLASSIFIED

DRAWING CLASSIFICATION: UNCLASSIFIED

TITLE: HYDRO TUBE END CAP (U)

(BUC)

SIZE: D

DRAWING NUMBER: R64910

CAGEC: 14213 | SCALE: 4:1 | SHEET 1 OF 1

STATUS: SA-REL-2/5/2002

ORIGIN: SA-SolidWorks 2001

GEOMETRIC PRECISION ± NA