# Final Report
# TURBO: Terabits/s Using Reconfigurable Bandwidth Optics

Lead PI: Daniel C. Kilper, University of Arizona
Co-PI: Keren Bergman, Columbia University

Large scale, big science applications are generating petabytes of data that need to be shared among multiple locations. Moving a petabyte of data at 100 Gb/s takes 22 hours. Reducing this to single digit hours or below is clearly attractive and with future applications anticipating exabyte scale transfers, multi-terabit per second capacities are needed. This scale of capacity is available using optical systems. Core optical systems have aggregate per fiber capacities on the order of 10 Tb/s and more than 100 Tb/s system experiments have been realized in the lab. But large optical capacities are not just reserved for the core as similar system capacities are available in metro networks right up to the enterprise, campus, or data center. In general, the same technology is used today in the metro area as in the long-haul networks—reconfigurable optical add drop multiplexing (ROADM) node-based wavelength division multiplexing (WDM) systems. Data centers already support massive internal capacities on the scale of 100's of Tb/s. As new photonic integrated technologies mature, for example through initiatives such as the Integrated Photonics Innovative Manufacturing Institute (IP-IMI), the cost of optical interfaces is expected to decrease, and higher capacity and higher performance interfaces will become more affordable. This set of circumstances creates the potential that Tb/s capacities will be available at the enterprise and campus level to support large scale science network applications.

A key challenge with respect to using the capacity in optical systems for application driven operations is that it is provisioned and remains fixed on the links to which it was originally provisioned. The native optical switching capabilities of ROADM nodes are only used at the time of provisioning to provide flexible capacity growth and wavelength routing during provisioning. The process of setting up a new connection is slow and cumbersome to avoid disrupting existing traffic. In a recent world record, 16 channels (line cards) were provisioned in 19 minutes over a pre-determined long-haul route. Thus, even if the capacity to support multi-Tb/s data transactions is available in the network, it cannot be flexibly utilized to create a multi-Tb/s connection between any two end points. Most of the capacity would likely be stranded on links that are not accessible from the end points of interest. Cost effective data networking relies on the ability to share capacity so that an application only utilizes the network when and where it needs it. For large science applications the fiber connections are no longer fat pipes. Flexible, on-demand optical connections are needed for efficient, cost effective data science networking. The situation is further complicated in a multi-network domain environment in which visibility and coordination between domains is limited. Here we refer to a network domain as a single provider network or a region within a single provider network that involves a technology hand-off of the communication signals. Examples of network domains might be a long-haul network and a metro network within a single provider's network or long-haul networks in two different providers' networks. Cross domain communication usually requires some type of performance measure or guarantee in order to enforce service level agreements (SLAs). While the notion of transmitting optical signals between different network domains is attractive from a cost and latency perspective, avoiding regeneration and packet processing, it has always been considered problematic due to the difficulty in verifying performance in the optical domain. SLAs are based on digital error rate measurements which cannot be well correlated in the general case to optical signal performance measures. Signal conditioning such as buffering and regeneration using optics have proven difficult and not competitive against electronic technologies.

**Recent advances in optical communication technology from both a control and hardware perspective have opened the door to real time transparent optical path establishment within a domain and methods for transparent handover guarantees at cross-domain network peering points.** International research programs have led to the development of cross-layer control planes that can provide the signaling and management to prepare long haul scale optical connections on time scales of seconds and even slightly below one second. Commercial ROADM nodes support flexible grid wavelength assignments in colorless add drop architectures so that any wavelength can be added at any port and include an array of control and monitoring capabilities. Coherent transceivers provide unprecedented signal adaptation and conditioning capabilities that relieve much of the careful transmission planning and design required in the past. New commercial ready technologies are available such as nanosecond speed tunable lasers and burst mode coherent receivers, low cost advanced optical performance monitors, and high-speed variable optical attenuators.

**What is missing that has prevented commercial systems from realizing dynamic real time optical path establishment and switching at scale is an SDN programmable optical physical layer control plane that can ensure stable and reliable operation**. Furthermore, there is a lack of optical physical layer performance guarantees and SDN protocol support for cross-domain transparent connections. By optical physical layer control, we mean the control system that adjusts and tunes all of the optical amplifiers, filters, attenuators, transceivers, and switches to maintain stable system operation and channel provisioning [1,2]. System vendors are not opening up their control planes to SDN and therefore the academic community must perform the research to make progress in this area. Formerly it was not feasible to build a large-scale optical network in a lab environment to perform such research. Over the past decade, however, the cost of optical amplification and switching equipment has come down dramatically and new laboratory techniques are under development. Furthermore, our understanding of optical power dynamics and other relevant phenomena has progressed.

The major goals of the TURBO project are to:

1) develop an optical physical layer control orchestrator within an SDN framework
2) develop the physical layer performance guarantees and protocol extensions necessary to establish transparent optical paths on demand
    a. within a single network domain
    b. across domains.

An optical physical layer control orchestrator is software routine that operates an optical transmission system by adjusting all of the hardware control elements such as switches and amplifiers and performs the main physical layer functions such as provisioning new traffic. Building this within an SDN framework means that it should be built using an SDN orchestration or controller platform that is compatible with a wide range of SDN controls and interfaces. The second goal involves developing the physical layer performance guarantees and methods to set up transparent optical paths in response to an application request through the north bound interface of the controller and this should work both within a single domain and across a domain boundary.

In addition to these two main goals of the project, the goals were expanded to include the development of extension to the Mininet network emulator to include emulation of optical networks. Mininet is a standard open source software package for evaluating SDN controllers using emulated networks. Mininet was not designed to account for the unique wavelength routing and physical impairment aspects of optical networks. In order to further study the new control

capabilities achieved in the first two goals of this project, a network emulation platform is needed in order to consider networks of different sizes, topologies, and complexity. Thus, extending Mininet for this purpose became an added goal of this project. The work was also coordinated with the Department of Energy ESnet organization so that this new capability could be used for the testing of future ESnet6 network physical layer capabilities.

## Major Accomplishments

Each of the goals for the TURBO project were achieved. The transparent software defined exchange (tSDX) cross domain control orchestrator was developed within the Ryu SDN controller framework. tSDX is able to perform the major physical layer control operations for ROADM based optical systems. It also provides both single-domain and cross-domain wavelength provisioning based on requests from its north bound interface, which can come from a network operating system or orchestrator such as ONOS. The tSDX architecture is illustrated in Figure 1 [3, 4]. A cross-domain control protocol (CDCP) was developed for communication between controllers in autonomous domains in order to establish transparent cross-domain wavelength connections guaranteed through optical signal to noise ratio (OSNR) based service level guarantees. The protocol includes capabilities to establish the cross-domain paths and to respond to performance degradation events.

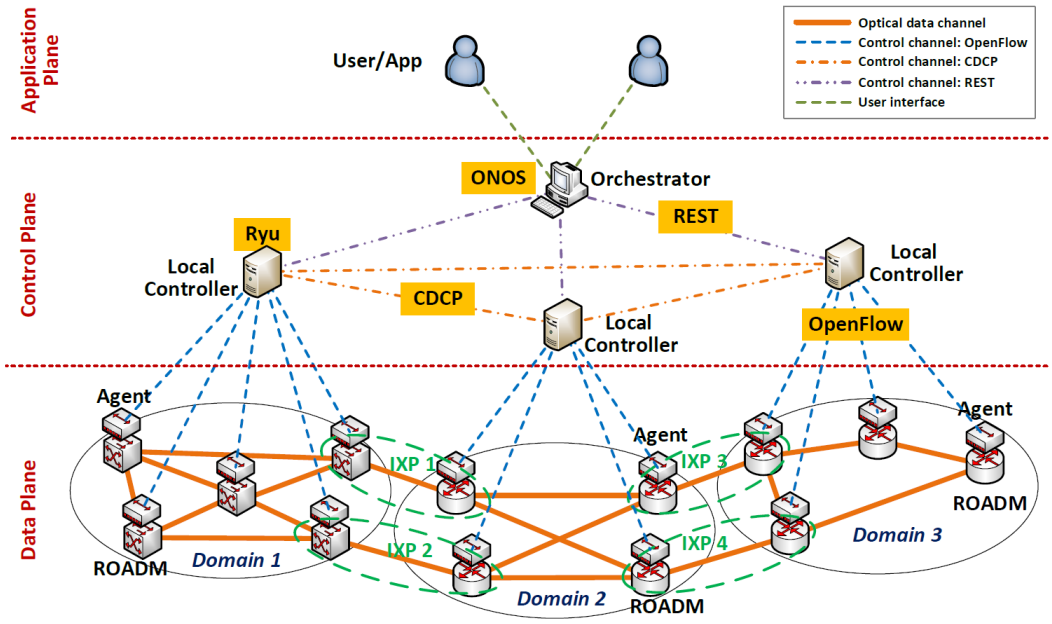


Figure 1. tSDX inter-domain control architecture: local physical layer controllers based on Ryu communicate through a cross-domain control protocol and to the overall network orchestrator based on ONOS [4].

Two additional functions were realized using the tSDX architecture: adaptive coding and machine learning based quality of transmission (QoT) prediction. Modulation formats such as 16-QAM are highly sensitive to the OSNR. Instead of re-routing an optical signal that experiences a degraded OSNR, it is possible to modify the forward error correction coding in order to allow for a greater tolerance to low OSNR. This capability was added to the tSDX controller and adaptation was shown for 16 QAM signals with low density parity check coding that could be varied in strength (i.e. percent overhead) depending on the OSNR requirement. A hysteresis-based adaptation algorithm was developed in order to account for short time scale OSNR variations [5]. An important function of a physical layer controller is to predict the physical layer performance using a QoT algorithm in order optimize the network configurations and spectral efficiency. Accurate

QoT estimation is difficult due to uncertainties and time dependent variations in the physical network plant, more so for cross-domain transmission. One important aspect of cross domain transmission is the requirement to transport signals across systems that might be sourced from different vendors, often referred to as disaggregated optical systems [6]. In addition to the tSDX control architecture, this project made important progress in understanding performance prediction and control in disaggregated optical systems. New developments in the use of machine learning for optical transmission performance prediction, or quality of transmission (QoT) estimation, opens the potential for improvements for disaggregated and multi-domain transmission [7]. We developed neural network models from optical amplifier performance which can be used by disaggregated optical system QoT estimation [8, 9]. Lastly, the Mininet emulation platform was extended through the development of the Mininet-Optical package, which allows for the study of such optical physical layer SDN controllers through emulation [10].

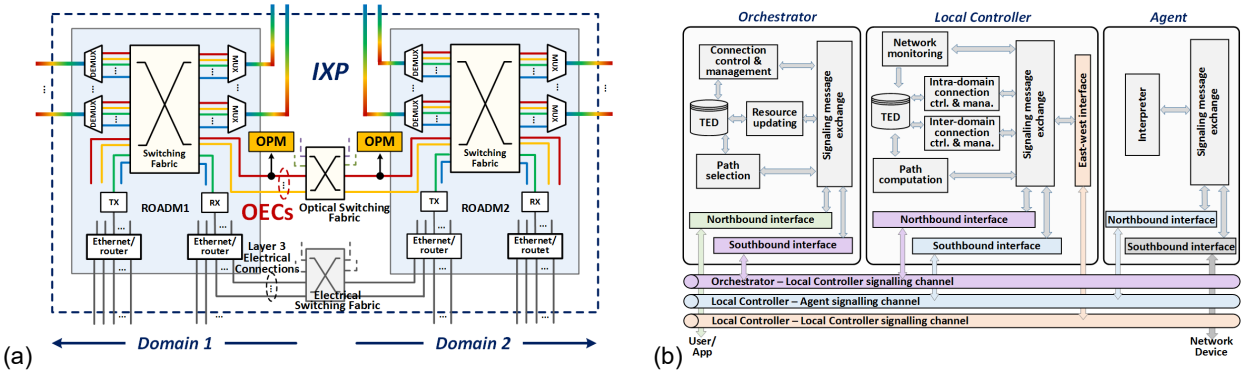


Figure 2. (a) ROADM add-drop architecture at the cross-domain Internet exchange points include optical express channels (OEC) guaranteed through OSNR monitored at the optical performance monitors (OPM); (b) functional diagram of the tSDX controllers showing the key elements to manage the physical layer operations [4].

The tSDX controllers and IXP architecture are shown in Figure 2. At Columbia University, a RYU controller-based path computation engine (PCE) and routing and wavelength assignment algorithm was developed and evaluated in the Columbia University inter-data center networking testbed environment. This controller manages the optical switch settings and performs network flow monitoring. The University of Arizona developed the physical layer control plane using the same RYU based controller. Modules were developed that control the transceiver wavelength and power, and ROADM switches and amplifiers for fast and reliable path establishment using fast switching methods and evaluated in an 8-span transmission system. All of these elements were subsequently integrated together and used in multi-domain transmission experiments in the TOAN testbed at Arizona.

The University of Arizona team has also developed an interface to the ONOS network operating system so that the physical layer controller can talk to the network operating system. For inter-domain transparent paths, OSNR monitoring was used to guarantee service level agreements. This monitoring was chosen to be compatible with a photonic integrated chip based OSNR monitor, which was jointly developed in a separate project by Columbia University and the University of Arizona. The photonic integrated chip-based solution is important because a dedicated OSNR monitor is needed on every optical channel that expresses through the Internet exchange point (IXP) at the inter-domain boundary. With the integrated monitors, arrays of devices could be fabricated on a single chip.

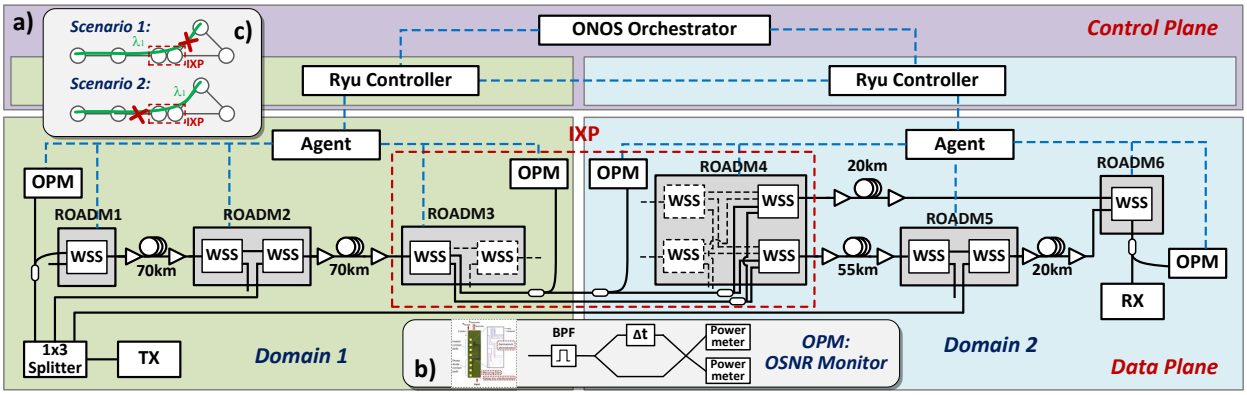


Figure 3. (a) Experimental setup for evaluating the architecture in Figure 1, including 6 ROADM nodes with three ROADMs in each domain; (b) the silicon photonic chip based OSNR monitor based on a Mach-Zehnder interferometer provides dedicated monitoring on individual channels at the IXP; (c) two failure and recovery scenarios used to evaluate the tSDX control performance [3].

The experimental setup at Arizona used to evaluate the tSDX approach is shown in Figure 3. Wavelength selective switch-based ROADMs were used to form a two domain network with three nodes in each domain. Each domain shares a node in the Internet exchange point (IXP) in order to perform either traditional terminated IXP exchange or the new transparent IXP exchange using optical express paths. OPM monitoring on one channel was demonstrated with the silicon photonic chip-based monitor shown in Fig. 3(b), as a proof of concept. However, optical spectrum analyzer based OSNR monitoring was used to emulate the silicon photonic device in order to provide monitoring on additional channels.

Using the setup in Fig. 3, two different use case failure scenarios where studied to show the tSDX control operation (Fig. 3(c)). In the first scenario an OSNR degradation occurs in the second domain, which is outside the transmitter domain. As a result, the controller for domain 2 checks the OSNR monitor at the IXP and determines that the fault is within its domain. Therefore, the domain 2 controller calculates a new path and re-routes the signal in order to recover from the failure. In scenario 2, the failure occurs in the same domain as the transmitter. Therefore, the Domain 1 controller must move the signal to a new wavelength in order to recover the path. In each case the OSNR failures and recoveries are confirmed using the OSNR monitors at the IXP. The control messages of the tSDX controller recorded using Wireshark are shown for each of the two scenarios (Fig. 4). Each monitoring and lightpath setup operation was completed with a maximum time of 250 ms.

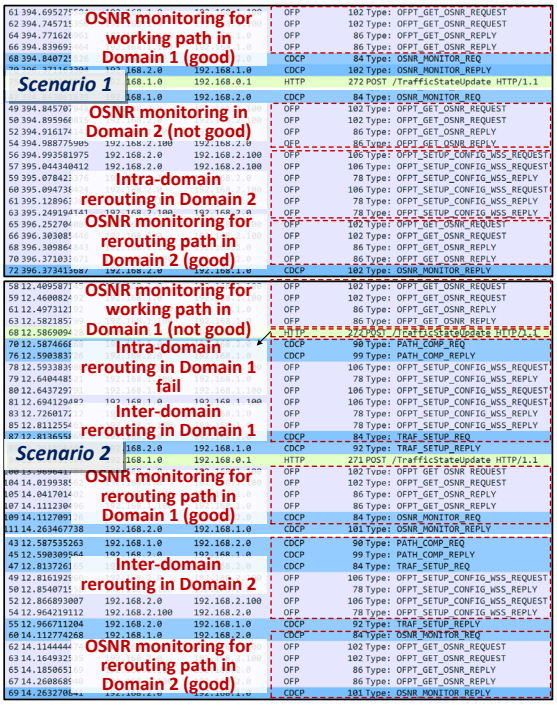


Figure 4. Wireshark traces of the tSDX control plane messages during the two use case scenarios [3].

In addition to the cross-domain wavelength routing and restoration operations, adaptive coding control functions were developed and

demonstrated. Instead of re-routing the optical signals when signal quality degradation occurs, it is possible to instead adapt to a stronger code. Advanced modulation with large constellations such as 16-QAM are particularly susceptible to OSNR degradation. Figure 5(a) shows the BER dependence for 16-QAM signals as a function of OSNR with no coding, 20% overhead (type 1), and 25% overhead (type 2). Above an OSNR of 12.5 dB the type 1 code is error free. Below 12.5 dB the signal must be adapted to the type 2 code to remain error free. The difficulty is that the OSNR naturally varies by as much as 1 dB (Fig. 5(b)). Since adapting the coding requires coordination between the transceivers at either end of a communication path and might reside in different network domains, the adaptation times can reach 100's of milliseconds. During this adaptation time, data cannot be transferred. Therefore, if the coding is frequently adapted then the throughput can drop significantly. By applying hysteresis that delays moving to the weaker coding, unnecessary transitions can be avoided. Event though this results in the system remaining at the stronger code rate longer, with lower throughput, the total throughput is increased because frequent coding transitions are avoided, as shown in Fig. 5(c).

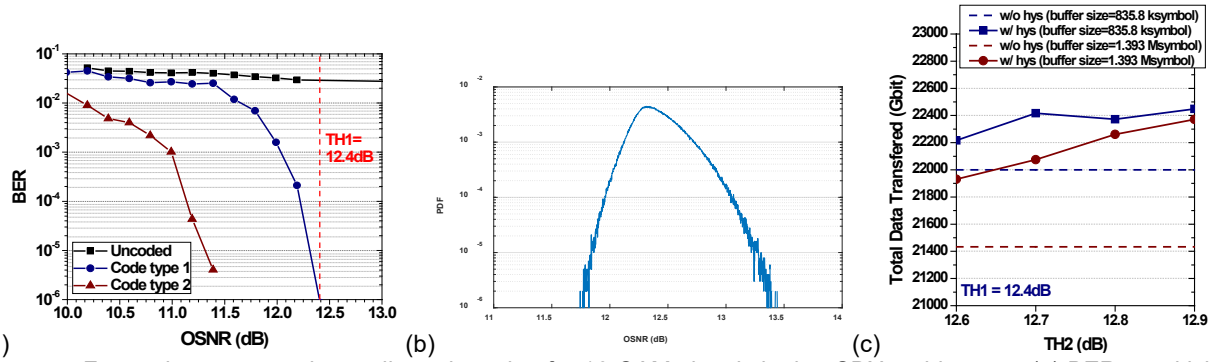


Figure 5. Forward error correction coding adaptation for 16-QAM signals in the tSDX architecture. (a) BER sensitivity to OSNR for two different strength LDPC codes; (b) OSNR variations due to polarization fluctuations; (c) data throughput enhancement due to the use of a hysteresis-based adaptation algorithm [5].

In order to improve QoT estimation in multi-domain systems, new methods for machine learning based QoT estimation were developed. While much recent work has focused on using machine learning generally for QoT prediction, in this project scalable methods for use in disaggregated and multi-domain systems were developed. The main approach is to collect data to train neural networks on amplifier performance over a wide range of operating conditions. Since the optical power of signals emitted from each amplifier is the main determinant of the OSNR and nonlinear transmission impairments, accurately predicting the wavelength dependent gain is key to QoT estimation [8]. Using neural network models developed by

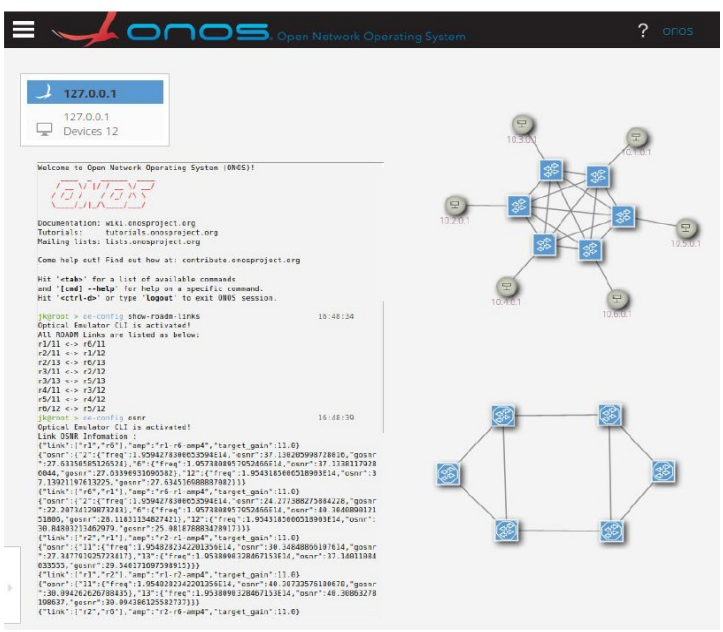


Figure 6. Mininet-Optical emulation of an ONOS based SDN controller for a 6 node fiber layer 1 network (bottom), including router and server layer 3 network (top) [10].

testing at the amplifier manufacturer, the QoT of the signals following different paths across those amplifiers can be estimated by construction of the optical powers along the path. In this project, neural networks were shown to outperform heuristic analytical models for the amplifier wavelength dependent gains [9].

During the final year of the project, work focused on the development of Mininet-Optical, which is a network emulator design to study software defined networking controllers, including optical physical layer controllers. Figure 6 shows the use of Mininet-Optical with the ONOS SDN orchestrator to model a six-node network. The figure shows both the fiber optical topology and the full mesh router topology with connections to servers. Using this approach, packet network connections can be emulated over the fiber network. At the same time, the fiber network signal OSNR and nonlinear impairments are emulated, allowing for SDN control of the optical network, including QoT estimation and wavelength routing [10]. The Mininet-Optical emulation platform was also developed to enable the study of the operation of open and disaggregated line systems such as the optical system planned for the ESnet6 network. Consultation with the ESnet6 network development team guided the design of Mininet-Optical. The code for Mininet-Optical is being developed for release open source under an apache license. The project maintains a github website: https://github.com/UA-Agile-Cloud/SDN-for-Optical-Networks, which includes details of the software developed in the project and is home to continuing development on Mininet-Optical.

## References


1. Y. Li, D. C. Kilper "Optical Physical Layer SDN" *IEEE/OSA J. Opt. Commun. Netw.*, **10**, 1, A110-A121 (2018).
2. D. C. Kilper and Y. Li, "Optical Physical Layer SDN: Enabling Physical Layer Programmability through Open Control Systems" Optical Fiber Communications (OFC) Conference, paper W1H.3, 2017.
3. Y. Li, W. Mo, S. Zhu, Y. Shen, J. Yu, P. Samadi, K. Bergman, D. C. Kilper "Transparent Software-Defined Exchange (tSDX) with Real-Time OSNR-Based Impairment-Aware Wavelength Path Provisioning across Multi-Domain Optical Networks." Optical Fiber Communications (OFC) Conference, pdp Th5A.2, 2017.
4. Y. Li, W. Mo, S. Zhu, Y. Shen, J. Yu, P. Samadi, K. Bergman, D. C. Kilper "tSDX: Enabling Impairment-Aware All-Optical Inter-Domain Exchange" *J. Lightwave Technol*. **36**, 142-154 (2018).
5. Y. Li, M. Yang, W. Mo, S. Zhu, Z. Qu, I. B. Djordjevic, D. C. Kilper "Hysteresis-Based Margin Allocation for Adaptive Coding in SDN-enabled Optical Networks" Proceedings of the Optical Fiber Communications (OFC) Conference, OSA, paper Th1D.2, 2018.
6. D. Kilper, S. Zhu, J. Yu, "Physical Layer Control for Dis-aggregated Optical Systems" in Asia Communication and Photonics (ACP) Conference, paper Su1J.1, 2018.
7. S. Zhu, J. Yu, T. Adams, and D. Kilper "AI-Based Control for Edge Cloud Optical Networks" in Asia Communications and Photonics (ACP) Conference, paper S3C.3, 2019.
8. W. Mo, S. Zhu, Y. Li, and D. C. Kilper "EDFA Wavelength Dependent Gain Spectrum Measurement Using Weak Optical Probe Sampling" *IEEE Photon. Technol. Lett*. **30**, 2, 177-180 (2018).
9. S. Zhu, C. L. Gutterman, W. Mo, Y. Li, G. Zussman, D. C. Kilper "Machine Learning Based Prediction of Erbium-Doped Fiber WDM Line Amplifier Gain Spectra" In Proc. European Conference on Optical Communications (ECOC), paper Mo3E.6, 2018.
10. R. Lantz, A. A. Diaz-Montiel, J. Yu, C. Rios, M. Ruffini, and D. Kilper "Demonstration of Software Defined Packet-Optical Network Emulation with Mininet-Optical and ONOS" Proceedings of the Optical Fiber Communications (OFC) Conference, OSA, paper M3Z.9, 2020.