Update on Investigations of Viability of Cold Spray and FSW as a Spent Nuclear Fuel Dry Storage Canister Mitigation Tool

Spent Fuel and Waste Disposition

Prepared for
US Department of Energy

Spent Fuel and Waste
Science and Technology

Pacific Northwest National Laboratory
Ken Ross
Morotolaoluwa Alabi

September 30, 2019
SFWD-SFWST-M3SF-19PN010201086
PNNL-29217

DISCLAIMER

This information was prepared as an account of work sponsored by an agency of the U.S. Government. Neither the U.S. Government nor any agency thereof, nor any of their employees, makes any warranty, expressed or implied, or assumes any legal liability or responsibility for the accuracy, completeness, or usefulness, of any information, apparatus, product, or process disclosed, or represents that its use would not infringe privately owned rights. References herein to any specific commercial product, process, or service by trade name, trade mark, manufacturer, or otherwise, does not necessarily constitute or imply its endorsement, recommendation, or favoring by the U.S. Government or any agency thereof. The views and opinions of authors expressed herein do not necessarily state or reflect those of the U.S. Government or any agency thereof.

SUMMARY

The purpose of this work is to investigate the use of cold spray and friction stir welding or processing (FSW/P) for repair and mitigation of chloride-induced stress corrosion cracking (CISCC) in dry cask storage system (DCSS) canisters to ensure integrity far beyond their original license period. This report provides a viability analysis of cold spray and friction stir welding for repair and fabrication of DCSS canisters. This report presents experimental work and a research strategy to optimize and evaluate cold spray and FSW/P for CISCC resistance.

The literature reports that the following three conditions must exist for CISCC to occur: tensile stress, corrosive environment, and susceptible material. These conditions must be understood and accounted for while evaluating CISCC susceptibility. Furthermore, non-obvious factors, such as surface conditions and geometric confinement, can dramatically increase the intensity of one or more of the three listed conditions for CISCC.

Arc welding should be considered for either temporary or permanent repair when combined with a mitigation technology. It is known that areas in and around fusion welds in alloys used for spent nuclear fuel storage canisters have increased CISCC susceptibility relative to base metal. Technologies, such as cold spray or FSW/P have the potential to mitigate the CISCC susceptibility caused by fusion welds or replace fusion welding for the repair.

FSW/P and cold spray, potential alternatives for fabrication and repair, are solid-phase processes. No melting occurs and the energy input is much lower than melt-based processes and can be controlled. These solid phase processes are expected to have improved CISCC resistance compared to melt-based fabrication and repair methods due to low heat input and reduced residual stresses. A goal of this effort is to develop and demonstrate optimized processes such that processed regions and surrounding areas have improved or equivalent CISCC resistance compared to the canister base metal.

FSW/P should be considered for use in new fabrication of canisters and repair of existing canisters. Low heat input and grain refinement result in materials with improved mechanical properties and comparable generalized corrosion performance relative to base metal. FSW/P offers the potential of through-thickness CISCC resistance.

Cold spray should be considered for production, mitigation, and repair of canisters. Cold spray has demonstrated the ability to deposit stainless steel (SS), Inconel alloys, and other alloys on SS 304L such that galvanic potential is matched and resistance to pitting is improved. The technical basis for cold spray mitigation and repair within the overpack using remote robotic equipment is established. A non-obvious application to the research community is the sealing of crevices. All instances of CISCC in the fielded nuclear applications reported by the Pressurized Water Reactor Owners Group (PWROG) (Hosler and Hall 2010; Lareau 2014) were associated with crevice corrosion. This can be avoided by cold spraying to seal crevices.

The bulk of the work planned for FY 2020 will be generating coupons for CISCC testing by collaborative projects at Pacific Northwest National Laboratory and Sandia National Laboratories. First an exploratory study will be executed that will include screening studies and process optimization. This task will identify the effect of process parameters on microstructure and CISCC resistance. Optimized parameters will be used to produce a smaller number of coupons for full testing and evaluation.

Test methods for evaluating CISCC resistance must meet the following criteria: (1) normalized surface geometry and exposed process microstructure, (2) account for residual stresses, (3) be in a controlled and appropriate test environment, and (4) be numerically quantifiable and repeatable. Failure to meet these criteria could lead to results that cannot be used for comparative analysis of processes and materials.

This page is intentionally left blank.

ACKNOWLEDGEMENTS

The authors would like to express their sincere thanks to the project's U.S. Department of Energy's sponsor, Ned Larson, for supporting and funding this work.

The authors would also like to thank our Sandia National Laboratories collaborators on this work.

The authors would like to thank Gary Cannell from Fluor Federal Services and Kyle Johnson from VRC Metal Systems for providing images and techno-economic information used in this report.

This page is intentionally left blank.

CONTENTS

SUMMARY iii

ACKNOWLEDGEMENTS v

ACRONYMS xiii

1. INTRODUCTION 1
   1.1 Chloride-Induced Stress Corrosion Cracking 1
   1.2 Arc Welding 3
      1.2.1 Advantages 3
      1.2.2 Technical Challenges 3
   1.3 Friction Stir Welding and Processing 4
      1.3.1 Advantages 4
      1.3.2 Technical Challenges 5
   1.4 Cold Spray 5
      1.4.1 Advantages 5
      1.4.2 Technical Considerations 6
   1.5 Competitive Benchmarking of CISCC Resistance 7

2. FRICTION STIR WELDING 9
   2.1 Process Details 9
   2.2 Viability Evaluation 11
      2.2.1 Application Space 11
      2.2.2 CISCC Resistance 12
      2.2.3 Mechanical Properties 12
      2.2.4 Economics 13
      2.2.5 Challenges of Implementing FSW of Steel 13
         2.2.5.1 Historical Challenges 13
         2.2.5.2 Current Challenges 14
   2.3 Samples Sent to SNL and SRNL 15
   2.4 Equipment Preparation 16
   2.5 Control Grain Structure Through Process Parameters 17
   2.6 Active Cooling Affects Residual Stresses and Shape of Stir Zone 17

3. COLD SPRAY 19
   3.1 Viability Evaluation 19
      3.1.1 Application Space 19
      3.1.2 CISCC Resistance 20
   3.2 Establish Relevant Material Sets 20
   3.3 Preparation for Coupon Generation 21

4. CRITERIA FOR COMPARATIVE ANALYSIS OF CISCC PERFORMANCE 23
   4.1 Normalization of Surface Geometry and Exposing Process Microstructure 23
   4.2 Residual Stresses 24

4.3 Environment 24
4.4 Quantifiable and Repeatable 24

5. FY 2020 WORK 25
5.1 Exploratory Work 25
5.1.1 Statistical Design of Experiments 25
5.1.2 FSW Process Development and Optimization 26
5.1.3 Cold Spray Process Development and Optimization 26
5.2 Application Research 27
5.2.1 Cyclic Thermal and Pressure Loading 27
5.2.2 Repair Demonstrations 28

6. REFERENCES 29

LIST OF FIGURES

Figure 1. Three conditions required for SCC. 2

Figure 2. Arc welding of a canister provided by Fluor. 3

Figure 3. FSP repair of laboratory created CISCC in 1-inch thick SS 304L coupons. FSP was performed at Pacific Northwest National Laboratory. 4

Figure 4. Cold spray process diagram. 5

Figure 5. Cold spray coating of various thicknesses over a fabricated crack in 304/304L simulating CISCC crack repair. Cold spray was done for PNNL by Army Research Laboratory. 6

Figure 6. Cold spray coating of commercially pure nickel ~1/8-inch thick for CISCC mitigation of susceptible base metal. Cold spray was done at PNNL. 7

Figure 7. A FSW tool is rotating counter clockwise (CCW) as it traverses along the joint lines between the two plates. Plasticized material is mixed forming a welded joint behind the tool. The stir zone is the material that has been mixed. The advancing side (AS) is the side of the joint where a point on the outer edge of the tool is rotating from the back of the tool to the front. The retreating side (RS) of the joint is where a point on the outer edge of the tool is moving from the front to the back. 9

Figure 8. Cross section of FSW in 304/304L with zones labeled. The FSW tool is rotating CCW; the traverse direction is out of the page. The AS is the side of the joint where a point on the outer edge of the tool is rotating from the back of the tool to the front. The RS of the joint is where a point on the outer edge of the tool is moving from the front to the back. The stir zone is where material is plasticized and mixed. The TMAZ is where material is mechanically deformed but not mixed. The HAZ is where the microstructure is affected by heat generated during welding but no mechanical deformation exists. 10

Figure 9. EBSD images showing differences in microstructures seen in low-temperature FSP relative to arc welding. 11

Figure 10. CPP coupons showing low-temperature FSW superior corrosion performance relative to GTAW. 12

Figure 11. ASTM E-8(ASTM E8 / E8M-16a 2016) tensile test coupon showing overmatched strength of FSW/P relative to the base metal. 13

Figure 12. Photo of welded plate received by SNL at the end of FY18 16

Figure 13. Improved control algorithm enables constant temperatures and stable process feedback signals throughout all but the first few millimeters of weld length without additional parameter identification work required previously. 16

Figure 14. EBSD images and grain size analysis for two FSW processing conditions and base metal. 17

Figure 15. Changes in stir zone shape with active cooling. Shape of typical stir zone is indicated by the dashed red line. Shape produced when active cooling is applied is shown in the solid blue line. 18

Figure 16. Cold spray nozzle capable of spraying a 1.5-inch inner diameter of a pipe. This nozzle was developed by PNNL collaborator Army Research Laboratory. 20

Figure 17. Repair of active leak using cold spray by VRC Metal Systems. Left: water leak; right: final repair. Pressure of the pipe was 1,000 PSI during and after the repair. 27

LIST OF TABLES

Table 1. Compositions of Selected Materials 21

Table 2. Powder Blend Recipes 21

Table 3. Three-Factor Central Composite Design with Alpha Point. This first block is corner points with three center points. The second block is alpha points with three center points. 25

Table 4. Proposed Exploratory Test Plan for Cold Spray 27

This page is intentionally left blank.

ACRONYMS

AS	advancing side
ASME	American Society of Mechanical Engineers
ASTM	ASTM International
CCW	counter clockwise
CISCC	chloride-induced stress corrosion cracking
CP	commercially pure
CPP	cyclic potentiodynamic polarization
DCS	dry cask storage
DCSS	dry cask storage system
DOE	U.S Department of Energy
EBSD	electron backscatter diffraction
FSP	friction stir processing
FSW	friction stir welding
FSW/P	friction stir welding or processing
FY	fiscal year
GTAW	gas tungsten arc welding
HAZ	heat affected zone
IGSCC	intergranular stress corrosion cracking
MH	man-hours
NDE	nondestructive examination
PNNL	Pacific Northwest National Laboratory
RPM	rotations per minute
RS	retreating side
SCC	stress corrosion cracking
SNL	Sandia National Laboratories
SRNL	Savannah River National Laboratory
SS	stainless steel
TMAZ	thermomechanically affected zone
VT	visual testing (inspection)

This page is intentionally left blank.

UPDATE ON INVESTIGATIONS OF VIABILITY OF COLD SPRAY AND FSW AS A SPENT NUCLEAR FUEL DRY STORAGE CANISTER MITIGATION TOOL

1. INTRODUCTION

Due to the lack of a permanent spent nuclear fuel repository, utilities are faced with extending licenses for dry cask storage systems (DCSS) canisters far beyond their original 20-year license period. DCSS canisters are made from austenitic stainless steels (SSs) and fabricated using fusion welds. High heat input and melting associated with fabrication welds causes material around the weld to be susceptible to chloride-induced stress corrosion cracking (CISCC). The purpose of this work is to investigate the use of cold spray and friction stir welding or processing (FSW/P) for repair and mitigation of CISCC in DCSS canisters to ensure integrity far beyond their original license period.

This report presents a viability analysis for FSW/P and cold spray.

1.1 Chloride-Induced Stress Corrosion Cracking

Three conditions must exist for CISCC to occur: tensile stress, corrosive environment, and susceptible material (Figure 1). These conditions must be understood and accounted for while evaluating CISCC susceptibility. Furthermore, non-obvious factors, such as surface conditions and geometric confinement, can dramatically increase the intensity of one or more of the three listed conditions for CISCC.

Dry cask storage (DCS) canisters are made from austenitic SSs that contain significant amounts of chromium (Cr) in the solid solution for anti-corrosion. Arc welding is used for fabrication welds. High heat input and melting associated with arc welding cause material on the weld line to melt. The molten material shrinks during solidification such that tensile residual stresses are created.

The material that melts in between the joint line is called the fusion zone. The material adjacent to the fusion zone, that does not melt and is affected by weld heat input, is the heat-affected zone (HAZ). During fusion welding of austenitic SSs, high heat input causes Cr-rich carbides to precipitate along grain boundaries, referred to as sensitization. This depletes Cr from the area surrounding the carbides causing it to be susceptible to corrosion. This form of attack is called intergranular stress corrosion cracking (IGSCC). Low carbon alloys, denoted by “L” have been developed to mitigate sensitization during arc welding.

Stress corrosion cracking (SCC) in 304LSS is often transgranular and caused by static tensile stress; however, intergranular SCC and transgranular SCC can be present simultaneously even in unsensitized materials. Static tensile stress increases crack initiation susceptibility due to exposed high energy sites that tend to attract chloride ions.

In an effort to provide a technical basis for extended storage capabilities, the U.S. Department of Energy (DOE) performed a gap analysis identifying that the DCS container welds fabricated using conventional fusion welding processes were sensitive to CISCC. Research work by Sandia National Laboratories (SNL) and others has shown that through-wall tensional residual stresses exist in current DCS containers. When combining these characteristics it is clear that there are uncertainties in assuring that this storage system will last 100 years.

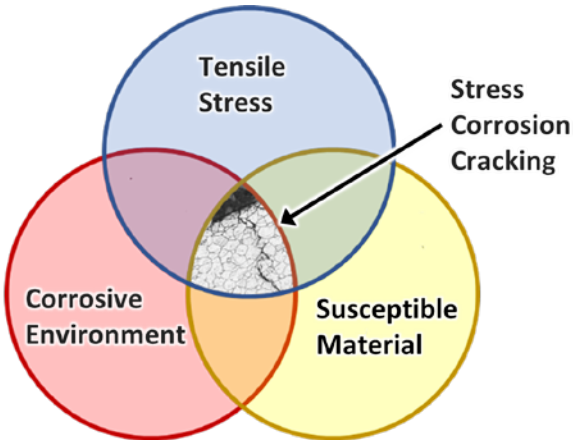

Figure 1. Three conditions required for SCC.

Three technologies will be discussed in this work. Arc welding, liquid phase processing, will be discussed because it is the current process used to fabricate DCSS canisters and it is currently used for repairs for various nuclear components. FSW/P and cold spray, two potential alternatives for fabrication and repair, are solid-phase processes. No melting occurs and the energy input can be controlled such that detrimental effects to the base metal during these processes are reduced and possibly eliminated. The goal of this work is to develop and demonstrate FSW/P and cold spray with improved CISCC resistance relative to SS 304/304L base metal in and around the processed regions.

Many studies (Ghosh and Kain 2010; Turnbull et al. 2011; Acharyya et al. 2012; Lyon et al. 2015; Zhou et al. 2016; Mankari and Acharyya 2017) have shown that machining or grinding of austenitic SSs generally degrades CISCC resistance as determined by ASTM G36 (ASTM G36-94(2018)). For a given end mill or grinding wheel, surface residual stresses and surface topology are affected by processing parameters such as feed rate, depth of cut, and spindle speed. Several works (Turnbull et al. 2011; Lyon et al. 2015) noted that pitting and cracks *first formed along machining grooves and other surface disruptions*. This means that for the conditions reviewed in these studies, surface geometry appeared to be the dominant factor for reduced CISCC resistance. The literature shows that for very smooth machined or ground surfaces examined, a thin layer, ~15 µm, with induced stresses, micro-cracks, and extensive grain fragmentation exists and detrimentally affect CISCC resistance.

In one study (Mankari and Acharyya 2017), the surface was treated by sanding followed by buffing. This process produced a surface with reduced plastic strain, reduced surface roughness, and induced compressive residual stresses at the surface produced by buffing. ASTM G36 testing showed that this process significantly improved CISCC resistance relative to other conditions evaluated. These studies show that final surface processing can have a strong effect on CISCC initiation.

For new fabrication, repair, or mitigation of canisters, it is assumed that processed regions will be machined or ground. Based on the literature and understanding of relevant physics discussed in this section, it is recommended to include a final material removal step, such as buffing, lapping, or polishing and could be a topic of study later in this program.

The immediate need for this program is to establish a surface processing strategy for CISCC analysis such that samples can be evaluated without confounding effects from surface geometry or material degradation produced by material removal processes. This can be achieved by a machining operation followed by an electropolishing operation to expose processed material with uniform surface geometry to other coupons and surface microstructure that is unaffected by material removal processes.

1.2 Arc Welding

Arc welding uses electric arc to join metal by melting materials at the interface. This has been a standard technology for joining metals for nearly a century. Currently arc welding is the standard fabrication and repair technology for the nuclear and many other industries. The DOE (Hanson et al. 2012) and U.S. Nuclear Regulatory Commission (2012) determined residual stresses resulting from fusion welds in austenitic DCSS canisters put the fusion weld areas at high risk for CISCC.

1.2.1 Advantages

- Commercially available manual and automated equipment
- Robotic solutions for repair within overpack are at a high technology readiness level
- Relevant codes and code cases exist for various arc welding repair processes

1.2.2 Technical Challenges

- There is a fundamental physics issue that causes reduced CISCC resistance of material in and around arc weld zones
- Weld shrinkage associated with resolidification produces residual tensile stress in and around the weld susceptible for further failure such as cracking

Arc welding, Figure 2, should be considered for temporary and permanent repair. It is known that alloys used in the existing inventory of spent nuclear fuel storage canisters have reduced CISCC resistance in areas around fusion welds. If fusion welding is used in a repair, it should be a temporary repair unless combined with a mitigation technique, such as cold spray or friction stir welding (FSW).

Figure 2. Arc welding of a canister provided by Fluor.

1.3 Friction Stir Welding and Processing

FSW is a solid-phase joining process and is achieved by spinning a tool and plunging it into the workpiece. Frictional heating and material deformation enable the formation of a plasticized region below the tool shoulder called the stir zone. The FSW tool and stir zone are traversed across the joint effectuating a weld. Temperatures generated during FSW are typically between 60% and 80% of the absolute melting temperature of the workpiece material. Friction stir processing (FSP) is the use of FSW for purposes other than joining such as material property modification and repair. Use of FSP to repair CISCC cracks is shown in Figure 3.

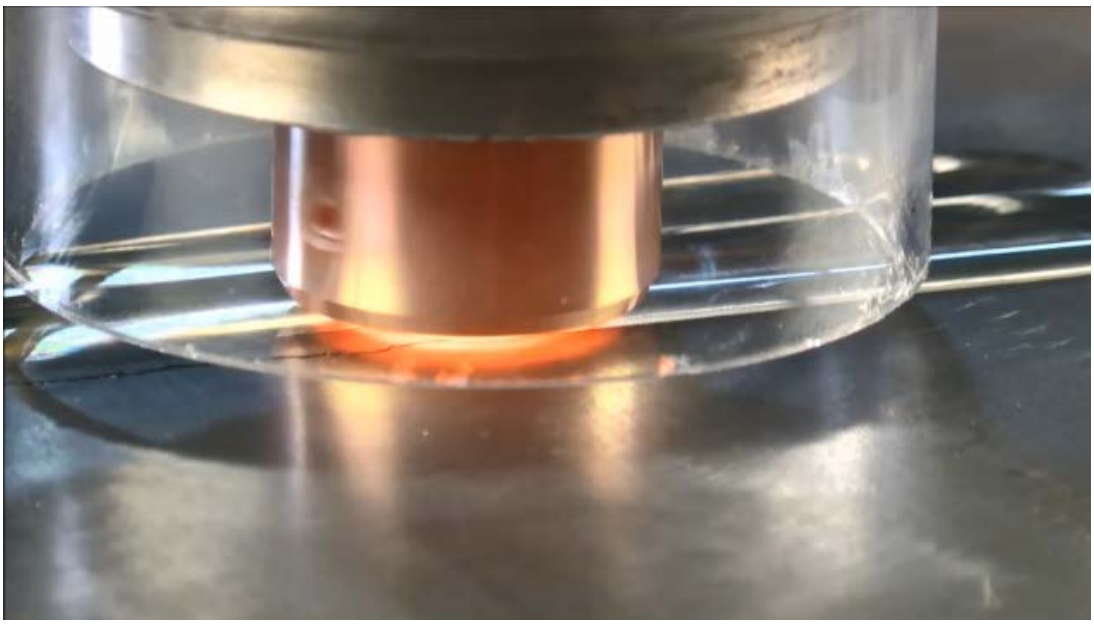

Figure 3. FSP repair of laboratory created CISCC in 1-inch thick SS 304L coupons. FSP was performed at Pacific Northwest National Laboratory.

1.3.1 Advantages

- Temperature-controlled FSP ensures heat input is sufficiently low to avoid or reduce corrosion susceptibility in or around the weld
- Initial results indicate the general corrosion resistance of the processed region is superior to that of arc welding and there is no detrimental HAZ
- Mechanical properties are overmatched: tensile specimen fails in the base metal rather than the stir processed zone
- Fully repairs physical defects (cracks, pitting) and microstructural damage (sensitization)
- Green process (no harmful fumes generated, low energy consumption)
- Weld or repairs can be done in a single pass
- Fully automated
- Easily applied in field with overpack removed

1.3.2 Technical Challenges

- Design of FSW/P equipment to fit between canisters and overpack is a nontrivial engineering challenge and may not be feasible.

FSW/P should be considered for use in new fabrication of canisters and repair of existing canisters. Low heat input and grain refinement result in material with improved mechanical properties and comparable generalized corrosion performance relative to base metal. Development efforts (Ross et al. 2017b; Sutton et al. 2017) by Pacific Northwest National Laboratory (PNNL), Fluor, and the Electric Power Research Institute demonstrated the following: Crack growth does not occur during FSP repair operations, cracks of a depth less than that of the stir zone are fully consolidated by FSP repair, and cracks extending deeper than the stir zone are dimensionally stable and successfully embedded within the test coupon during FSP repair.

1.4 Cold Spray

Cold spray is a solid-phase deposition process (Figure 4) where particles are accelerated to supersonic velocities and impact a substrate. The impact energy is sufficient to plastically deform the material at the interface and produce a mechanical interlock and metallurgical bond. During the process, substrate heating is minimal, dimensional stability is maintained, and unwanted thermal effects (HAZ, thermal stresses, dilution layer formation, etc.) are avoided.

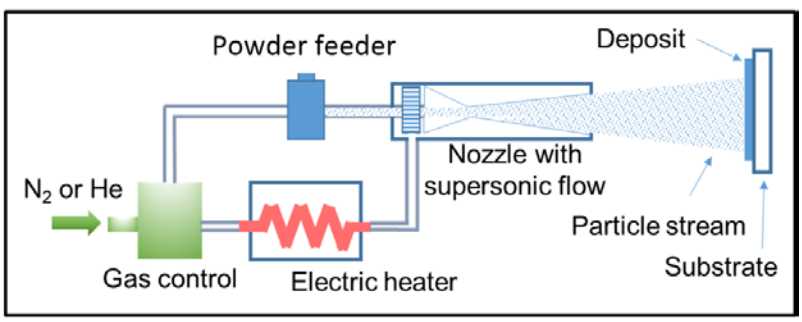

Figure 4. Cold spray process diagram.

1.4.1 Advantages

- Very low energy input and no detrimental HAZ
- Structural properties can be achieved (100 ksi (689 MPa) tensile strength, > 30 ksi (207 MPa) adhesion strength)
- No real limit on deposition thickness.
- Porosity can be optimized with spray parameters; porosity values below 1% can be achieved with no interconnected porosity
- Powder microstructure and properties are generally preserved with a high degree of stability
- Cold spray produces a high-density, high–hardness, and cold-worked microstructure with compressive residual stresses as opposed to the tensile residual stresses associated with fusion welding processes. This retards crack propagation and improves the corrosion fatigue resistance in a manner similar to shot peening.
- Generally no oxide formation, alloy decomposition, or combustion product entrapment

- Portable equipment is commercially available

1.4.2 Technical Considerations

- Design of equipment to effectuate repair with the overpack in place is feasible but challenging
- Cold spray for full structural repair is an unexplored research topic. Because cold spray is an additive process, building up cold spray material to restore structural integrity to the canister would result in a modification to canister geometry.

Cold spray should be considered for production, mitigation, and repair of canisters. As part of a Small Business Innovation Research award from the DOE, VRC Metal Systems and their team demonstrated the ability to deposit SS and Inconel alloys on SS 304L such that galvanic potential is matched and resistance to pitting is improved. This work has also established the technical basis for cold spray mitigation and repair within the overpack using remote robotic equipment. Examples of cold sprayed material are shown in Figure 5 and Figure 6.

Figure 5. Cold spray coating of various thicknesses over a fabricated crack in 304/304L simulating CISCC crack repair. Cold spray was done for PNNL by Army Research Laboratory.

Figure 6. Cold spray coating of commercially pure nickel ~1/8-inch thick for CISCC mitigation of susceptible base metal. Cold spray was done at PNNL.

1.5 Competitive Benchmarking of CISCC Resistance

In coordination with SNL and Savannah River National Laboratory (SRNL), PNNL is working to identify top performing processes, parameters, and materials for CISCC mitigation and repair in DCSS canisters. PNNL is producing test coupons using various materials, processes, and parameters. Figure 9 shown later in Section 2.1 displays dramatic differences in microstructure resulting from FSP and arc welding of 304/304L.

High-fidelity CISCC analysis and testing is cost- and time-prohibitive for down selection of top performing processes and parameters. Therefore, SNL will use accelerated corrosion testing (such as ASTM G36, ASTM G61-86(ASTM G61-86(2018)) and ASTM B117-18(ASTM B117-18)) to benchmark the corrosion resistance of each material. Learnings from this testing will generate understanding of how process parameters affect microstructure and CISCC resistance and inform additional processes and material system optimization work at PNNL. FSW coupons have been sent to both SNL and SRNL. A small subset of FSW and cold-sprayed samples will be sent to SNL before the end of the fiscal year (FY) and more will be generated as soon as FY 2020 funds arrive.

Learnings from the accelerated corrosion testing and processes optimization will be used to down select top performing processes for detailed analysis and testing. Top performing processes will be applied to coupons fabricated from a single heat of SS 304/304L. These coupons will be tested in high-fidelity four-point bending systems designed for CISCC testing at both PNNL and SNL.

This page is intentionally left blank.

2. FRICTION STIR WELDING

2.1 Process Details

FSW is a solid-phase joining process effectuated by spinning a tool and plunging it into the workpiece. Frictional heating and material deformation enable the formation of a plasticized region below the tool shoulder called the stir zone. The FSW tool and stir zone are traversed across the joint effectuating a weld. Temperatures generated during FSW are typically between 60% and 80% of the absolute melting temperature of the workpiece material.

Primary control axes for FSW are spindle, forge, and traverse (Figure 7). The spindle axis is the rotation of the FSW tool. Traditionally the control variable for the spindle axis has been rotation rate defined by rotations per minute (RPM). PNNL controls the spindle axis by modulating the mechanical power input from the spindle into the weld to maintain a constant temperature as measured in the FSW tool. For this work, tool temperature will be the control variable for the spindle axis. RPM, torque, and power will be output variables for the spindle axis.

The forge axis is movement in the tool axial direction. The forge axis is shown in red and the tool axis is shown as a black line in Figure 7. The forge axis controls the movement and applied force of the FSW tool into the workpiece in the tool axial direction. The forge axis typically runs in either force control or position control. When the forge axis is run in force control, a desired forge force is maintained and position in the tool axial direction (depth) of the tool is a process output. When the forge axis is run in position control, the position of the tool is maintained and tool axial force, or forge force, is a process output. The traverse axis is defined as the axis that is in the weld direction. The cross seam, or transverse axis, is the axis perpendicular to the weld direction.

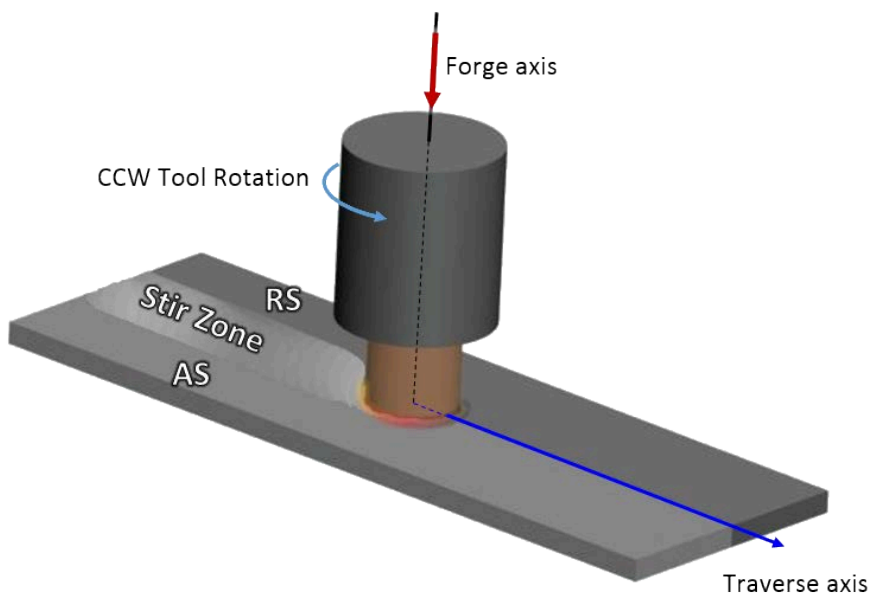

Figure 7. A FSW tool is rotating counter clockwise (CCW) as it traverses along the joint lines between the two plates. Plasticized material is mixed forming a welded joint behind the tool. The stir zone is the material that has been mixed. The advancing side (AS) is the side of the joint where a point on the outer edge of the tool is rotating from the back of the tool to the front. The retreating side (RS) of the joint is where a point on the outer edge of the tool is moving from the front to the back.

A cross section of a friction stir weld in SS 304/304L is shown in Figure 8 and weld zones are labeled and defined. The weld zones include the stir zone, the thermomechanically affected zone (TMAZ), and the HAZ. The stir zone is where material is mixed or stirred producing a highly refined grain structure. The TMAZ is where material is mechanically deformed and affected by weld heat input but the material is not mixed. The HAZ is where the microstructure is affected by heat generated during welding but no mechanical deformation exists.

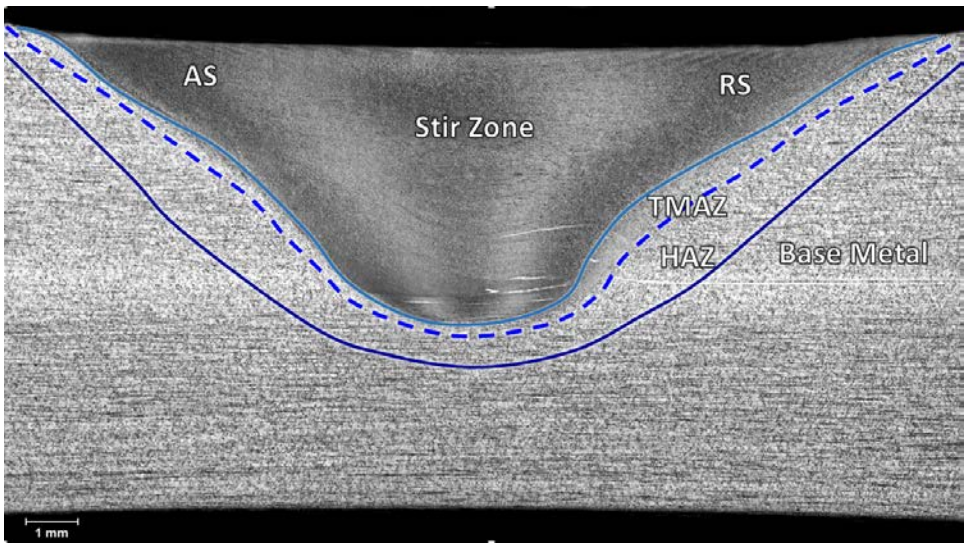

Figure 8. Cross section of FSW in 304/304L with zones labeled. The FSW tool is rotating CCW; the traverse direction is out of the page. The AS is the side of the joint where a point on the outer edge of the tool is rotating from the back of the tool to the front. The RS of the joint is where a point on the outer edge of the tool is moving from the front to the back. The stir zone is where material is plasticized and mixed. The TMAZ is where material is mechanically deformed but not mixed. The HAZ is where the microstructure is affected by heat generated during welding but no mechanical deformation exists.

It is important to note that low-temperature FSW can produce welds that appear to have no detrimental HAZ in austenitic SS. Electron backscatter diffraction (EBSD) images shown in Figure 9 compare the cross section of low-temperature FSP to an arc weld. There is no apparent grain growth in the HAZ in FSW/P. The stir zone shows an ultrafine grain microstructure.

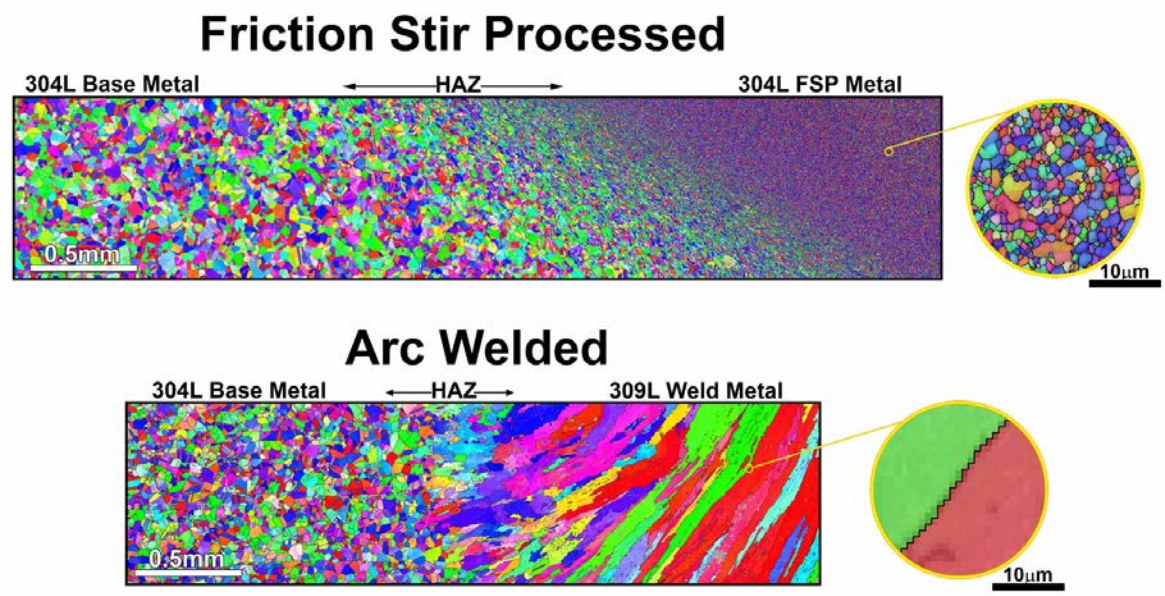

Figure 9. EBSD images showing differences in microstructures seen in low-temperature FSP relative to arc welding.

2.2 Viability Evaluation

2.2.1 Application Space

FSW or FSP should be considered for use in new fabrication of canisters and repair of existing canisters. Low heat input and grain refinement associated with low-temperature FSW result in material with improved mechanical properties and equivalent generalized corrosion performance relative to base metal. Development efforts (Ross et al. 2017b; Sutton et al. 2017) by PNNL and industrial partners demonstrated the following: crack growth does not occur during FSP repair operations, cracks of a depth less than that of the stir zone are fully consolidated by FSP repair, and cracks extending deeper than the stir zone are dimensionally stable and successfully embedded within the test coupon during FSP repair.

FSW produces a superior weld. PNNL has shown that low-temperature FSW can produce welds in various steel alloys with overmatched mechanical properties and equivalent corrosion performance relative to the base metal (Cannell et al. 2015).

FSW/P offers the potential to fabricate or repair austenitic SS such that mechanical properties and corrosion resistance of the base metal are equivalent or superior to the original base metal. Therefore the base metal, *not the processed material or heat-affected zone*, may become the limiting factor in corrosion and mechanical considerations.

Due to the size of equipment, repair within the overpack is unlikely. FSP repair with the overpack removed is desirable because it repairs sensitization and restores mechanical properties of the canister material.

There is a strong argument for FSW for fabrication welds. FSW could enable through-thickness welds that have no detrimental HAZ, allowing the entire thickness of the canister to be considered a non-sensitized corrosion barrier with no mechanical knockdowns associated with welding.

2.2.2 CISCC Resistance

General and localized corrosion behavior can strongly influence the propensity for SCC to occur in DCSS canister weldments. Previous work (Cannell et al. 2015) shows that low-temperature FSW performs significantly better in general and localized corrosion compared to gas tungsten arc welding (GTAW), the current processes used in fabrication welds of DCSS canisters. Corrosion evaluation consisted of performing electrochemical measurements, including: (1) open circuit potential monitoring, (2) linear polarization resistance scans, and (3) cyclic potentiodynamic polarization (CPP) scans. Corrosion rates for low heat input welds, where measured temperature was below 780°C, as reported in (Cannell et al. 2015), were below 1 mil per year and some lower than 0.05 mil per year. FSW with high heat input and GTAW coupons varied between 32 and 48 mil per year. The dramatic improvement in corrosion resistance of the low-temperature FSWs can be seen optically in the CPP coupons shown in Figure 10.

This work showed that when temperature is kept sufficiently low during FSW, the corrosion rate of the weld and surrounding material can be less than 1/640 that of GTAW. Studies presenting mechanisms for improved corrosion resistance of low-temperature FSW of austenitic SS cannot be found in literature. The mechanisms for these improvements are likely reduced heat input and grain refinement. Reduced heat input reduces the risk of sensitization and other forms of microstructural degradation.

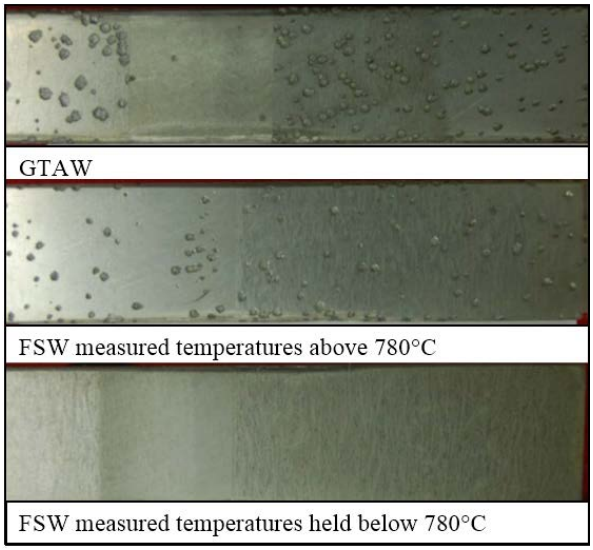

Figure 10. CPP coupons showing low-temperature FSW superior corrosion performance relative to GTAW.

Low-temperature FSW produces ultrafine-grained material. A literature review (Gupta and Birbilis 2015) reported that the passive film developed on nanostructured SS is more stable, more compact, contains lower defect density, and has higher Cr content (for an equivalent bulk Cr content) compared to passive films formed over coarse-grained SS. This literature review included 266 references. In this wide study of the literature, the broad consensus is that nanocrystalline structures improved corrosion resistance. A recent study (Tiamiyu et al. 2019) evaluated corrosion resistance of coarse-, fine-, and ultrafine-grained SS. This study showed that the corrosion resistance improves with decreasing grain size and that ultrafine-grained material had a more stable passivation film similar to that reported in nanostructured SS.

2.2.3 Mechanical Properties

Low-temperature FSW/P produced improved mechanical properties relative to the base metal for austenitic SS. This is shown in Figure 11 where failure occurs in the base metal, far away from the weld and HAZ.

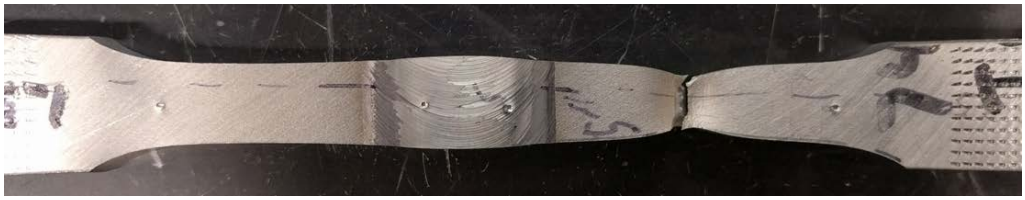

Figure 11. ASTM E-8(ASTM E8 / E8M-16a 2016) tensile test coupon showing overmatched strength of FSW/P relative to the base metal.

2.2.4 Economics

For many alloy systems FSW can produce thick welds in a single pass with overmatched mechanical properties and equivalent corrosion resistance relative to the base metal.

In 2012, ExxonMobil (Kumar et al. 2012) presented a study on economic incentives for use of FSW in girth welding of pipeline compared to gas metal arc welding. ExxonMobil estimates approximately 7% savings for onshore large-diameter pipelines and approximately 25% savings for offshore pipeline installations using the J-lay method. The primary cost savings mechanism is cycle time. FSW produces a fully consolidated weld in a single pass; therefore, cost savings increase with increasing wall thickness compared to gas metal arc welding. In the nuclear sector, cost savings could be much greater.

The ability to assess weld quality, as a function of the welding process signature, real-time, could significantly reduce the risk of re-work. FSW technology process and equipment lend itself well to assessing weld quality, real-time. Such a “screening” tool would obviate the need for conventional for-information-only NDE and, due to the real-time nature of the process, would be more efficient in identifying when to stop the welding process to make in-process repairs. Previous work at PNNL has developed and demonstrated (Ross et al. 2017a) controls technology to maintain constant temperature conditions throughout welds and from weld to weld. The combination of advanced controls and screening tools will enable detection of pre-defect and modification of process parameters to avoid defect formation. When applied in this manner, it will be extremely rare for defects to occur; and when defects occur, they will be immediately detected.

FSW has a superior cost model relative to arc welding because thick sections can be done in a single pass, it is fully automated, and can be defect-free when appropriate controls are in place. Low-temperature FSW produces superior mechanical properties and corrosion resistance relative to other joining techniques.

2.2.5 Challenges of Implementing FSW of Steel

It is important to note that after tremendous evaluation efforts and research and development investments, both Sweden and Finland (Lumetta et al. 2006) selected FSW as the joining technology for final storage of nuclear waste.

2.2.5.1 Historical Challenges

Two classes of materials are currently competing in FSW tool materials for FSW of high-temperature alloys. The first is refractory metals such as tungsten and tungsten-rhenium. The second category is superabrasives such as polycrystalline boron nitride.

Refractory metals have high fracture toughness and low wear resistance. Tungsten-rhenium tools have demonstrated the ability to weld thicker steel plates than any other tool material. Due to the low wear resistance, tools are redressed after approximately 5 meters of welding. Tools can be redressed multiple times to yield a total tool life of 31 m to 59 m (Eff et al. 2016).

Superabrasives have high wear resistance and low fracture toughness. Tool lives of 45 m (Perrett et al. 2011) to 80 m (Sorensen 2004) have been reported.

Within the last decade a composite tool, Megastir Q70, that contains 70% polycrystalline boron nitride and ~30% tungsten-rhenium was developed. This composite tool has the best tool life.

For FSW of steels, tools capable of weld depths of greater than ½-inch thick were first demonstrated within the last 10 years.

Weld properties (Sato et al. 2002; Long et al. 2007; Richards et al. 2010), such as fracture toughness and corrosion resistance, vary with weld temperature. Traditional control methods of FSW result in large variations in temperature over the length of the weld, resulting in inconsistent properties. If specified properties are desired throughout the weld, the weld temperature must be controlled throughout the length of the weld.

The traditional control parameters for FSW are spindle speed, travel speed, and tool force/depth. These parameters are typically held constant after the initial plunge and traverse. Temperature is not constant at constant spindle speed. FSW of a flat plate in a laboratory environment showed a temperature change of 20°C in a 254 mm section and similar temperature variances were seen throughout the weld (Ross and Sorensen 2013). This weld was run in a controlled lab environment. Full pipe welds run at constant spindle speed in a lab environment show temperature variations of more than 60°C (Mahoney et al. 2016). It is assumed that temperature variation in the field is higher. These traditional controls for FSW have no means to actively reject thermal disturbances. Variation in the following cause thermal disturbances: ambient temperature, thickness within a part, thickness from part to part, material properties or chemistry, clamping, thermal mass of material surrounding the FSW tool, thermal contact resistance at the part-backing plate, and backing plate-anvil interfaces.

Because of the high cost of FSW research tools for steels, many researchers run welds too hot in fear of breaking tools. Until recently many FSW researchers did not consider or even record weld temperature. Because researchers did not monitor or control weld temperature, there are disagreements in reported values for weld properties for a given material. Furthermore, the majority of reported properties for FSW of high-temperature alloys are lower than optimized values because they are run too hot.

PNNL has developed robust temperature control technology for FSW that allows measured temperature to be held within 1°C despite the presence of process disturbances. This allows for weld properties to be repeatable within a weld and from weld to weld. Robust temperature control allows for stable welds at very low temperature, producing improved performance. This technology became available for licensing this FY.

2.2.5.2 Current Challenges

Current challenges include lack of information and data from hot welds. Most of the technical developments that enable FSW for DCSS canisters occurred within the last 10 years. Most of the industry is unaware that FSW of steels is now possible at relevant thicknesses and at sufficiently low temperature to avoid detrimental HAZs. Unfortunately, most of the FSW community is continuing to run welds in steel and publish performance data at measured tool temperatures 20°C to 200°C higher than the 780°C boundary above which corrosion resistance is degraded. PNNL's investment in FSW of steel and relevant processes controls allows for stable and repeatable welds at measured tool temperatures as low as 720°C.

The task lead for this project has assisted companies across industry sectors from nuclear to automotive and ranging in size from startups to household brands to identify and develop advanced manufacturing processes. It is the principal investigator's experience that regardless of size or industry sector, most companies resist change. In most cases new processes must have multiple strong value propositions for a company to transition to the new technology. Typically a risk vs. reward analysis is done to determine if the potential value from the new technology is worth the associated expense and risk. Risk for

implementing FSW is strongly influenced by the cost and time required to approve a new welding processes for nuclear pressure vessels.

Spent fuel dry storage canisters are American Society of Mechanical Engineers (ASME) Code certified vessels with the design and construction requirements identified in ASME Section III, Division 3, Containment Systems for Transportation and Storage of Spent Nuclear Fuel and High-Level Radioactive Material, which has been incorporated into law in the *Code of Federal Regulations* (10CFR-72). Using FSW for canister fabrication would require significant code work and approvals. Getting a new joining processes through relevant codes, regulation, and approval requires a significant effort and funding.

Some canister vendors are not enthusiastic about spending the level of research and development funding required for codification needed to fabricate canisters with FSW. Some canister vendors prefer that independent spent fuel storage installations take the Russian doll approach where cracked canisters are stored within a new larger canister.

Some canister vendors are beginning to address CISCC susceptibility with surface treatments such as shock peening or coating such as cold spray. This is because they have less up front cost and dramatically reduced regulatory requirements/roadblocks relative to technologies for pressure-boundary weldments, such as FSW. It is important to remember that surface treatments or coatings protect the material at the surface but do not heal residual stresses or sensitization below a thin layer at the surface.

The threat is that surface treatments and coatings will be declared “good enough” and canisters will continue to be fabricated with processes that create sensitized material and tensile residual stresses through thickness, except for a thin surface layer. While surface treatments and coating are certainly a significant step forward and valuable, DOE and industry should promote the vision for through-thickness CISCC resilience.

2.3 Samples Sent to SNL and SRNL

Development of weld parameters for the plunge and initial traverse is typically done after the optimal conditions during traverse are understood. We had limited time and funding in FY 2018; therefore, the objective was to demonstrate that FSW can produce welds without sensitization. To achieve this objective a very low-temperature setpoint and very fast traverse speed were used to minimize heat input. This resulted in a weld that has far less heat input and peak temperature than any weld in known literature.

The weld sent to SNL at the end of FY 2018 is shown in Figure 12. This weld is at the extreme end of low energy input. It is known that very fast traverse rates increase residual stress and are more sensitive to defects. However, the purpose of this sample is to explore an extreme condition and demonstrate no sensitization in the weld.

In subsequent welds, process parameters will be used that produce less, no, or compressive residual stresses. The process space will be fully explored to optimize residual stress conditions without producing sensitization or other forms of microstructural degradation that reduce CISCC resistance.

Figure 12. Photo of welded plate received by SNL at the end of FY18

2.4 Equipment Preparation

Welds run this year are using improved controls during the plunge and traverse that we developed early this FY as part of this project. This improvement enables constant temperatures and stable process feedback signals throughout all but the first few millimeters of weld length without the additional parameter identification work required previously. The objectives of this task were (1) to get as much weld length that is not affected by transient conditions produced by the plunge and initial traverse and (2) to reduce process development time. Both objectives were accomplished. The only disadvantage running these improved algorithms without prior tuning welds is that the plunge takes longer resulting in increased heat input during the plunge. Temperature profiles typical of rapid FSW process development are shown Figure 13.

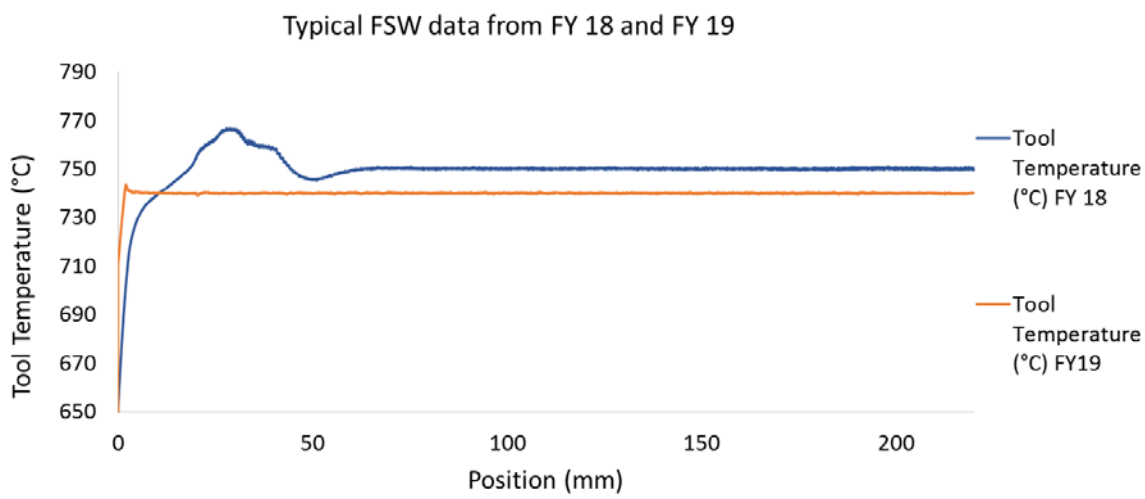

Figure 13. Improved control algorithm enables constant temperatures and stable process feedback signals throughout all but the first few millimeters of weld length without additional parameter identification work required previously.

This new algorithm is valuable because it reduced process development time and maximized the steady-state weld length available for analysis.

2.5 Control Grain Structure Through Process Parameters

Three welds were made as part of exploratory work to understand the effect of temperature and traverse rate on grain size in FSW of 304/304L. The weld parameters and setup were identical except for the temperature setpoint and feed rate. Figure 14 suggests that reducing temperature reduces grain size and also suggests that increasing traverse speed increases grain size when all other conditions are constant. The increased grain size for increased traverse speed is counter intuitive because increased traverse speed welds at a given temperature setpoint typically have much lower heat inputs. It is unknown if this increase in grain size for increased travel speed holds true for higher temperatures. There is data that suggest that grain size-increased advances per revolution can produce increased grain refinement in steel alloy systems. These affects will be investigated and quantified in exploratory work described in Section 5.1.

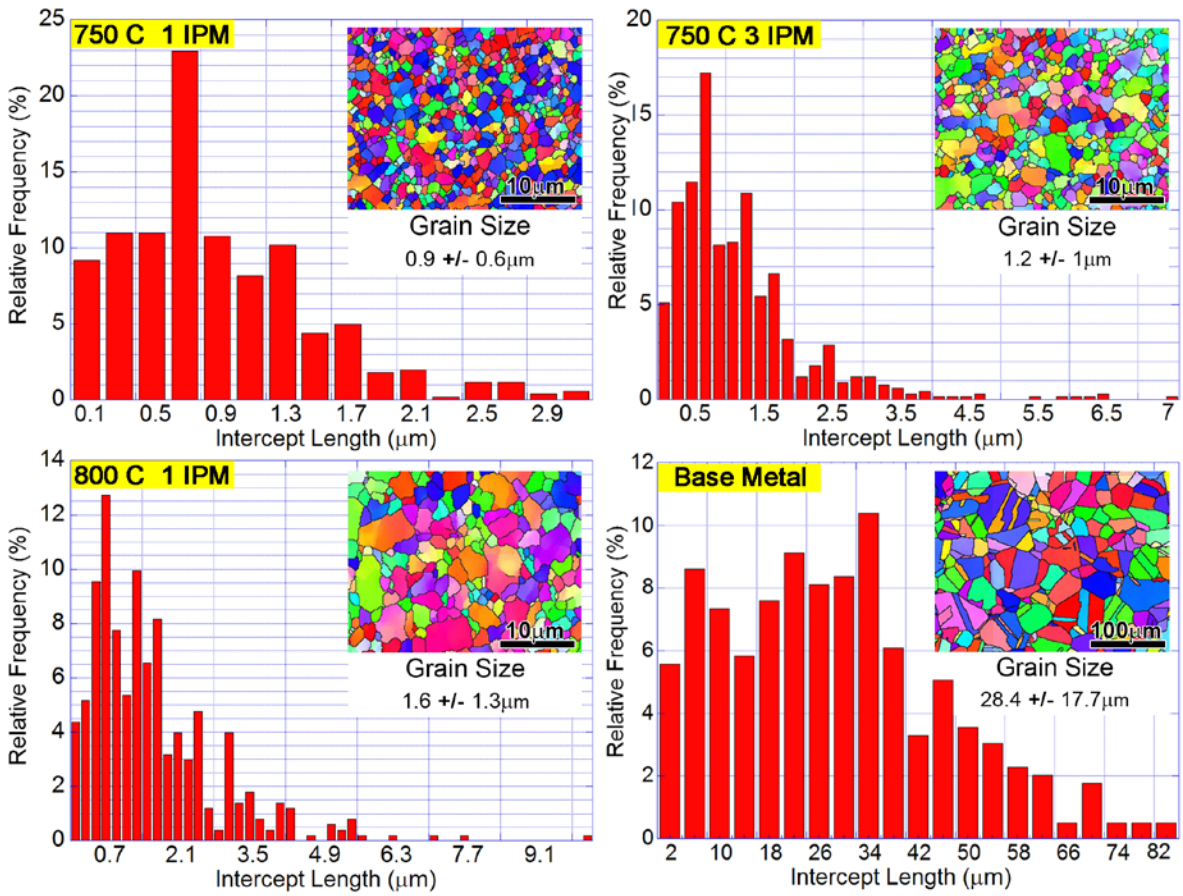

Figure 14. EBSD images and grain size analysis for two FSW processing conditions and base metal.

2.6 Active Cooling Affects Residual Stresses and Shape of Stir Zone

Exploratory work was done in FY 2019 in which PNNL developed a novel active cooling technique that has the ability to affect stir zone shape and residual stresses. Work using active cooling was extremely limited. Figure 15 shows stir zone shape change with aggressive active cooling techniques as determined from optical microscopy.

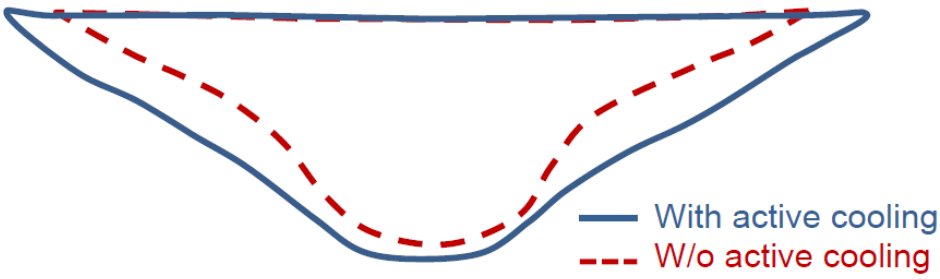

Figure 15. Changes in stir zone shape with active cooling. Shape of typical stir zone is indicated by the dashed red line. Shape produced when active cooling is applied is shown in the solid blue line.

3. COLD SPRAY

The cold spray process as shown in Figure 4 is a novel approach to applying interlayer materials developed in the mid-1980s at the Institute of Theoretical and Applied Mechanics, Novosibirsk, Russia. Cold spray is a low-temperature deposition and consolidation process in which particles are injected into a high-pressure gas flow that is accelerated through a converging-diverging nozzle to supersonic velocities. When the particles impact a deformable substrate, they inelastically deform, create ballistic impingement bonds and metallurgical bonding with the substrate. This minimizes unwanted thermal effects, introduces beneficial compressive residual stress, and can be done in situ, thereby greatly reducing the cost of repair by avoiding teardown/removal costs. The distinguishing feature of the cold spray process compared with other thermal spray processes is that no melting occurs. In cold spray the nozzle exit temperature is substantially lower than the gas preheat temperature, therefore the feedstock particles experience far lower temperature excursions than in other thermal spray process.

3.1 Viability Evaluation

Alloy 625 micro powder (a key material of interest) has reportedly been deposited on an Alloy 718 substrate at less than 1% porosity; 316LSS micro powder has been deposited on various SS substrates at less than 0.5% porosity. Both these deposits exhibited bond strengths of 11 ksi (75.8 MPa). 304LSS and 316LSS have been deposited at 0.67 mm and 0.71 mm deposition thickness per pass, respectively, at less than 1% porosity.

High-pressure cold spray has been successfully applied to numerous parts within the Army, Navy, and the Air Force, with demonstrated cost savings on 77 parts exceeding several million dollars as of June 2016. One of the first applications was for magnesium rotorcraft components with corrosion damage. They developed a cold spray process to reclaim magnesium components; this process shows significant improvement over existing methods with corrosion characteristics exceeding that of the parent material in accordance with ASTM G61 and salt water exposure tests. The primary explanation for the increased corrosion resistance is because of the material substitution of more noble aluminum for magnesium; aluminum also forms a protective oxide layer, which magnesium does not. Another successful application of cold spray is for a valve actuator on the Navy Seawolf submarine, which has been approved for use under Uniform Industrial Process Instruction (UIPI) 6320-901. The repair was developed by a consortium under coordination with Puget Sound Naval Shipyard and the Army Research Laboratory where both significant corrosion and wear of the valve sealing surfaces had occurred.

3.1.1 Application Space

Cold spray is appropriate for in situ repair/mitigation of existing canister and new canister fabrication. Cold spray can be used to deposit metal that acts as a corrosion barrier over fabrication welds and their HAZs. Cold spray has tremendous potential for executing repair and mitigation for existing canisters. Nozzles are developed that are capable of spraying in areas with clearances as small as 1.5 inches (Figure 16). Processes forces, and temperatures are very low.

Cold spray can also be used in new fabrication to coat fabrication welds and their HAZs to act as a corrosion barrier and induce compressive residual stresses into the coating and into the base material immediately beneath the cold spray coating.

Cold spray will have a much faster path to commercialization because of the significantly reduced regulatory requirement of coatings compared to weldments for DCSS canisters.

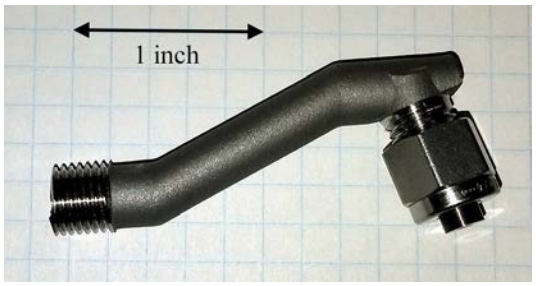

Figure 16. Cold spray nozzle capable of spraying a 1.5-inch inner diameter of a pipe. This nozzle was developed by PNNL collaborator Army Research Laboratory.

3.1.2 CISCC Resistance

Various materials, such as commercially pure (CP) nickel, are known to have greatly improved SCC resistance in primary water conditions relative to austenitic SS and can be cold sprayed over fabrication welds and HAZs. However cold spray nickel does not perform as well because it lacks the protective alloy elements that would counter the effects of a highly stressed microstructure. Preliminary work showed that Alloy 625 can be cold spray deposited on 304LSS/308LSS as a corrosion protection barrier against SCC because Alloy 625 has better corrosion properties in comparison.

3.2 Establish Relevant Material Sets

- Alloy 625 is an austenitic nickel-chrome alloy that was selected for analysis because it is a nickel-based high alloy material that is widely used for its high-temperature creep resistance and outstanding aqueous corrosion resistance (Smith 1993). Alloy 625 is used frequently in the nuclear industry for primary structures and as filler metal for dissimilar metal welds and structural repairs.
- The Ni-Cr-Mo alloy is a nickel-based hard-facing alloy designed specifically for corrosion performance. It is expected for the Ni-Cr-Mo to outperform Alloy 625.
- 410 chrome carbide is being mixed with Alloy 625 and the Ni-Cr-Mo alloy so that the hard carbide phases can prevent nozzle clogging during cold spraying and improve deposition efficiency by boosting particle strain. In addition, hard phases are being introduced to increase residual compressive stress in the deposit and beneath the deposit in the substrate.
- CP nickel is a key material of interest in the cold spray community.

Chemical compositions of these materials are given in Table 1.

Table 1. Compositions of Selected Materials

Grade	Alloy 625	410 Chrome Carbide	304LSS	Ni-Cr-Mo Alloy
C	<0.1%	~4%	<0.08%	0.10%
Cr	20–23%	Balance	17.5–20%	23%
Ni	Balance	~8%	8–11%	Balance
Mo	8–10%	-	-	18%
Mn	<0.5%	-	<2%	-
Si	<0.5%	-	<1%	<1%
P	<0.015%	-	<0.045%	-
S	<0.015%	-	<0.03%	-
Cu	-	-	-	-
Fe	<5%	-	Balance	<1%
Al	<0.4%	-	-	-
Ti	<0.4%	-	-	-
Co	<1%	-	-	-
Nb	3.15–4.15%	-	-	-

Alloy 625 and Ni-Cr-Mo will both be cold sprayed alone and with 410 chrome carbide for comparison. Table 2 shows the powder blends investigated in this study. Powder blends will be referred to in this report by the powder blend number assigned in Table 2.

Table 2. Powder Blend Recipes

	Weight Percentage [wt.%]								
Alloy 625	50	75	100						
Ni-Cr-Mo alloy				100	50	75			
CP Nickel							100	75	50
410 Chrome Carbide	50	25			50	25		25	50
Powder Blend #	1	2	3	4	5	6	7	8	9

3.3 Preparation for Coupon Generation

It is necessary to qualify powders prior to cold spraying. Each powder is sieved to a specification of –325 mesh, or approximately –44 µm; this was confirmed via particle size analysis. Energy dispersive x-ray spectroscopy data was obtained. Via energy dispersive x-ray spectroscopy data analysis, no annealing was deemed necessary for this study. However, to dehydrate the powders, they were dried in an oven at 100°C for 1 hour before being sprayed. Microhardness and particle size distribution data were both obtained.

This page is intentionally left blank.

4. CRITERIA FOR COMPARATIVE ANALYSIS OF CISCC PERFORMANCE

This section discusses criteria required for comparative analysis of CISCC performance. Test methods must: (1) normalize surface geometry and expose processes microstructure, (2) account for residual stresses, (3) be in a controlled and appropriate test environment, and (4) be numerically quantifiable and repeatable. Failure to meet these criteria could result in outcomes that cannot be used for comparative analysis of processes and materials.

4.1 Normalization of Surface Geometry and Exposing Process Microstructure

Arc welding, cold spray, and FSW/P components are typically machined or ground after processing across all industries. For new fabrication, repair, or mitigation of canisters, welds are ground or machined flush. Many studies (Ghosh and Kain 2010; Turnbull et al. 2011; Acharyya et al. 2012; Lyon et al. 2015; Zhou et al. 2016; Mankari and Acharyya 2017) have shown that machining or grinding of austenitic SS generally strongly affects CISCC resistance as determined by ASTM G36. Several works (Turnbull et al. 2011; Lyon et al. 2015) noted that pitting and cracks *first formed along machining grooves and other surface disruptions*. This means that for the conditions reviewed in these studies, surface geometry appeared to be a leading factor for reduced CISCC resistance. The literature shows that for very smooth machined or ground surfaces examined a thin layer (~15 µm), with induced stresses, micro-cracks, and extensive grain fragmentation exists and detrimentally effect CISCC resistance.

Section 1.2 of the ASTM G36 standard states "The boiling magnesium chloride test is applicable to wrought, cast, and welded SS and related alloys. It is a method for detecting the effects of composition, heat treatment, ***surface finish***, microstructure, and stress on the susceptibility of these materials to chloride stress corrosion cracking." The authors of the standard are stating that surface finish is a variable that affects the outcome of ASTM G36 testing.

Post processing, such as grinding or machining, cannot be used to normalize the surface. For a given end mill or grinding wheel, surface residual stresses, topology, and integrity are affected by processing parameters such as feed rate, depth of cut, and spindle speed. For a given machining or grinding operation applied at constant parameters, the surface topology, residual stresses, and integrity will strongly vary with microstructures and other properties generated by the processes being evaluated. Therefore, grinding and machining cannot be used to normalize surface conditions.

Coupons should be electropolished such that the coupons meet a roughness tolerance and process microstructure is exposed. This allows processes to be compared without being obscured by surface geometry or post-process machining/grinding. It is important to note that mechanical polishing produces a nanocrystalline layer at the surface that is very corrosion resistant and different from the original material (Wang et al. 2015). Therefore processes such as electropolishing are preferred.

In one study (Mankari and Acharyya 2017) sanding was followed by buffing. This process produced a surface with reduced plastic strain, reduced surface roughness, and induced compressive residual stresses at the surface produced by buffing. ASTM G36 testing showed that this process significantly improved CISCC resistance relative to other conditions evaluated. These studies show that final surface processing can have a strong effect on CISCC initiation.

For arc welding, cold spray and FSW/P components are typically machined or ground after processing across all industries. For new fabrication, repair, or mitigation of canisters, it could be assumed that processed regions will be machined or ground. Based on the literature and understanding of relevant physics discussed in this section, it is reasonable to include a final material removal step, such as buffing,

lapping, or polishing that should be required as a final post-weld step after the weld is ground or machined flush.

With cold spray for nearly all applications the author is aware of, the top ~0.5 mm of the surface is removed. This is because it takes multiple layers of cold spray to fully densify material underneath. Even for cold spray, it is important to normalize the surface by polishing to remove the transitory microstructure that exists in the top ~200 µm. However, for repairs within an overpack, removal of this top layer may be impractical and unnecessary.

The immediate need for this program is to establish a surface processing strategy for CISCC analysis such that samples can be evaluated without confounding effects from surface geometry or material degradation (such as grain fragmentation or micro-cracks) produced by material removal processes. This can be achieved by a machining operation followed by an electropolishing operation to expose processed material with uniform surface geometry to other coupons and surface microstructure that is unaffected by material removal processes.

Once top performing processes are selected, surface conditions can be evaluated and optimized with and without post processing such as grinding or buffing.

4.2 Residual Stresses

Test methods must take into account residual stresses. Processes should be rewarded based on the type, magnitude, and distribution of residual stresses produced. For example, U-bend samples that are bent after processing cannot be used to evaluate FSW and cold spray samples because it is not fair to artificially induce the same levels of damaging tensile residual stress typical of fusion welds into other processes that produce dramatically different, and sometimes beneficial, residual stresses. When a weldment is cut, stress relief occurs. To properly evaluate CISCC performance, residual stresses must be retained or measured and reapplied.

Screening studies that only include retained residual stress should indicate such in the abstract and conclusion sections.

4.3 Environment

Environment variables have a strong effect on CISCC and must be understood and controlled.

4.4 Quantifiable and Repeatable

Many CISCC test methods were developed for qualitative analysis. Methods need to be developed such that CISCC performance is numerically quantified and repeatable as proven using gauge capability studies. High-fidelity four-point bend testing in autoclaves is being developed at PNNL/SNL. This method should prove via gauge capability studies that results are sufficiently accurate and repeatable.

It is desirable to build upon ASTM G36 or other CISCC screening methods to produce a rapid screening study where results are numerically quantifiable and sufficiently repeatable. This should be proved with a gauge capability study.

5. FY 2020 WORK

The bulk of the work done in FY 2020 will be generating coupons for CISCC testing by collaborative projects at PNNL and SNL. First an exploratory study will be executed that will include screening studies and process optimization. This work task will identify the effect of process parameters on microstructure and CISCC resistance. Optimized parameters will be used to produce a smaller number of coupons for full testing and evaluation.

5.1 Exploratory Work

Based on work done in FY 2019, FSW continuous variables of interest include tool temperature, tool depth, and traverse speed. Categorical FSW variables of interest include active cooling and multiple passes. Once additional funding has been authorized, work will begin to quantify effects of these variables in CISCC performance.

5.1.1 Statistical Design of Experiments

Central composite designs will be used for the exploratory study to determine the effect of process parameters on microstructure and CISCC performance. An example of a three-factor central composite design is shown in Table 3. Central composite designs are desirable because they enable sequential buildup of knowledge and estimation of effects, interactions, curvature, and variability.

For each process studied, the Block 1 will be run first. Block 1 includes corner points and a center point with three replicates. The corner points are used to establish main effects and interactions. The center point is used to estimate curvatures, and the replicates of the center point enable estimation of variability. Results from the first block will determine if additional runs are needed and if so what type of runs will be made. If variability is high, Block 1 could be repeated with corner point replicates. If results indicate the optimal CISCC parameters for a given factor are outside the experimental range, additional levels for that factor can be added as needed.

Table 3. Three-Factor Central Composite Design with Alpha Point. This first block is corner points with three center points. The second block is alpha points with three center points.

Standard Order	Blocks	Factor A	Factor B	Factor C	
1	1	-1	-1	-1	Corner points
2	1	1	-1	-1	
3	1	-1	1	-1	
4	1	1	1	-1	
5	1	-1	-1	1	
6	1	1	-1	1	
7	1	-1	1	1	
8	1	1	1	1	
9	1	0	0	0	Center point with replicates
10	1	0	0	0	
11	1	0	0	0	
12	2	-1.682	0	0	Alpha points
13	2	1.682	0	0	

14	2	0	-1.682	0	
15	2	0	1.682	0	
16	2	0	0	-1.682	
17	2	0	0	1.682	
18	2	0	0	0	Center point with replicates
19	2	0	0	0	
20	2	0	0	0	

5.1.2 FSW Process Development and Optimization

Primary control axes for FSW are spindle, forge, and traverse. The spindle axis is the rotation of the FSW tool. Traditionally the control variable for the spindle axis has been rotation rate defined by in RPM. PNNL controls the spindle axis by modulating mechanical power input from the spindle into the weld to maintain a constant measured temperature in the FSW tool. For FSW continuous variables of interest include tool temperature, tool depth, and traverse speed. Categorical FSW variables of interest include active cooling and multiple passes.

Exploratory work includes generation of 16 weld coupons. Eleven coupons are for a two-level three-factor central composite with three center points. The factors for the central composite are travel speed, tool depth, and tool temperature. The results will enable estimation of main effects, interactions, curvatures for continuous variables of interest, and will estimate variability of the CISCC testing process.

In addition to the central composite design, three categorical variables will be evaluated—active cooling, multiple passes, and spindle tilt, perpendicular to the weld path. The center point condition will be run at three active cooling configurations; two multi pass conditions; and two spindle tilt, perpendicular to the weld path, to determine if these techniques can reduce or eliminate residual stresses, create a ring of compressive residual stress ring around the processed region, and create compressive residual stresses across the weld surface.

Once effects of continuous variables are understood and the significance of categorical variables identified, process optimization will begin. Iterative coupon generation and testing will continue until the project team identifies optimal process parameters for high-fidelity CISCC testing and analysis.

5.1.3 Cold Spray Process Development and Optimization

For cold spray, continuous variables of interest include pressure, gas temperature, and traverse speed. Categorical cold spray variables of interest include powder material, carrier gas, and surface effects. For each material, gas pressure, gas temperature, and traverse speed will be developed at PNNL prior to creation of test coupons.

Cold-sprayed test coupons will be created using materials defined in Table 2. The prosed test plan for these samples in show in Table 4. Iterative coupon generation and testing will continue until the project team identifies optimal process parameters for high-fidelity CISCC testing and analysis.

Table 4. Proposed Exploratory Test Plan for Cold Spray

	Specimen	0	1	2	3	4	5	6	7	8	9
Glue test [Mpa]	run1		I	I	I	I	I	I	I	I	I
	run2		I	I	I	I	I	I	I	I	I
Residual Stress [Mpa]	ISO/TS 21432	I	I	I	I	I	I	I	I	I	I
	Contour	I	I	I	I	I	I	I	I	I	I
Mil STD 3021: Porosity [%]	run1		I	I	I	I	I	I	I	I	I
	run2		I	I	I	I	I	I	I	I	I
	run3		I	I	I	I	I	I	I	I	I
Hardness [Vickers]	run1	I	I	I	I	I	I	I	I	I	I
	run2	I	I	I	I	I	I	I	I	I	I
	run3	I	I	I	I	I	I	I	I	I	I
ASTM G61-86	Ecorr [mV vs ref. Hg_2Cl_2]	I	I	I	I	I	I	I	I	I	I
	Icorr [A/cm2]	I	I	I	I	I	I	I	I	I	I
	Epit [mV vs ref. Hg_2Cl_2]	I	I	I	I	I	I	I	I	I	I
	Eprot [mV vs ref. Hg_2Cl_2]	I	I	I	I	I	I	I	I	I	I
ASTM B117-18	Weight Loss [g]	I	I	I	I	I	I	I	I	I	I
	Microstructure	I	I	I	I	I	I	I	I	I	I

Once effects of continuous variables are understood and the significance of categorical variables identified, process optimization will begin. Iterative coupon generation and testing will continue until the project team identifies optimal process parameters for high-fidelity CISCC testing and analysis.

5.2 Application Research

5.2.1 Cyclic Thermal and Pressure Loading

In FY 2020 cold spray will be used to repair cracks in pipes and testing done to establish guidelines for thickness of cold spray repair based on (1) properties of the cold-sprayed material produced by the selected material and parameters, (2) internal pressure, and (3) operating temperature. This work will be done for conditions relative to CISCC canisters.

There is an extremely high likelihood of success based on work done by PNNL collaborator VRC Metal Systems. Figure 17 provides screen shots from a video provided by VRC Metal Systems of a cold spray repair of an active water leak at 1,000 PSI. It is important to note that to effectuate this repair, material was built up around the active leak. For CISCC repair, there will be no active pressure and a flat repair can be made that easily holds the pressure.

Figure 17. Repair of active leak using cold spray by VRC Metal Systems. Left: water leak; right: final repair. Pressure of the pipe was 1,000 PSI during and after the repair.

5.2.2 Repair Demonstrations

Repair of laboratory-generated CISCC cracks will be done in FY 2020 using both FSW and cold spray. Use of cold spray and FSW to repair fusion welded regions will also be developed in FY 2020. If time and budget allow, these samples will be evaluated for CISCC performance.

6. REFERENCES

Acharyya SG, A Khandelwal, V Kain, A Kumar and I Samajdar. 2012. "Surface working of 304L stainless steel: Impact on microstructure, electrochemical behavior and SCC resistance." *Materials Characterization* 72:68-76. DOI: https://doi.org/10.1016/j.matchar.2012.07.008.

ASTM B117-18. 2018. "Standard Practice for Operating Salt Spray (Fog) Apparatus." West Conshohocken, PA: ASTM International. DOI: 10.1520/B0117-18. Available at http://www.astm.org/cgi-bin/resolver.cgi?B117.

ASTM E8 / E8M-16a. 2016. "Standard Test Methods for Tension Testing of Metallic Materials." ASTM International, West Conshohocken, PA: ASTM International. DOI: 10.1520/E0008_E0008M-16A. Available at http://www.astm.org/cgi-bin/resolver.cgi?E8E8M.

ASTM G36-94(2018). 2018. "Standard Practice for Evaluating Stress-Corrosion-Cracking Resistance of Metals and Alloys in a Boiling Magnesium Chloride Solution." West Conshohocken, PA: ASTM International. DOI: 10.1520/G0036-94R18. Available at http://www.astm.org/cgi-bin/resolver.cgi?G36-94(2018).

ASTM G61-86(2018). 2018. "Standard Test Method for Conducting Cyclic Potentiodynamic Polarization Measurements for Localized Corrosion Susceptibility of Iron-, Nickel-, or Cobalt-Based Alloys." West Conshohocken, PA: ASTM International. DOI: 10.1520/G0061-86R18. Available at http://www.astm.org/cgi-bin/resolver.cgi?G61.

Cannell G, G Grant and T Adams. 2015. "Demonstration of Friction Stir Welding (FSW) Technology for Packaging of Used Nuclear Fuel." In *Waste Management Symposium*. March 15-19, 2015, Phoenix, AZ. Available at http://www.wmsym.org/archives/2015/papers/15025.pdf.

Eff M, B Thompson, SS Babu and T Leonhardt. 2016. "Establishing W-based Friction Stir Welding Tool Life for Thick Section Steel Applications." In *Friction Stir Welding and Processing VII*, pp. 107-116. eds: R Mishra, MW Mahoney, Y Sato, Y Hovanski and R Verma. Cham: Springer International Publishing. DOI: 10.1007/978-3-319-48108-1_12.

Ghosh S and V Kain. 2010. "Effect of surface machining and cold working on the ambient temperature chloride stress corrosion cracking susceptibility of AISI 304L stainless steel." *Materials Science and Engineering: A* 527(3):679-683. DOI: https://doi.org/10.1016/j.msea.2009.08.039.

Gupta RK and N Birbilis. 2015. "The influence of nanocrystalline structure and processing route on corrosion of stainless steel: A review." *Corrosion Science* 92:1-15. DOI: https://doi.org/10.1016/j.corsci.2014.11.041.

Hanson B, H Alsaed, C Stockman, D Enos, R Meyer and K Sorenson. 2012. *Gap Analysis to Support Extended Storage of Used Nuclear Fuel, Rev. 0*. FCRD-USED-2011-000136 Rev. 0; PNNL-20509. Washington, D.C.: U.S. Department of Energy. Available at https://www.osti.gov/servlets/purl/1133836.

Hosler R and J Hall. 2010. *Outside Diameter Initiated Stress Corrosion Cracking*. PWR Owners Group. Available at https://www.nrc.gov/docs/ML1104/ML110400241.pdf.

Kumar A, A Wasson and D Fairchild. 2012. "A Study on the Economic Incentives of Welding Steel Pipelines Using Friction Stir Welding." In *9th International Friction Stir Welding Symposium 2012*, pp. 1-9. May 15-17, 2012, Huntsville, AL. Curran Associates, Inc., Red Hook, NY.

Lareau JP. 2014. "Operating Experience with Chloride Induced Stress Corrosion Cracking " In *EPRI ESCP*, Charlotte, NC.

Long T, W Tang and AP Reynolds. 2007. "Process Response Parameter Relationships in Aluminium Alloy Friction Stir Welds." *Science and Technology of Welding and Joining* 12(4):311-317. DOI: 10.1179/174329307X197566.

Lumetta GJ, RS Addleman, BP Hay, TL Hubler, TG Levitskaia, SI Sinkov, LA Snow, MG Warner and SL Latesky. 2006. *Selective Media for Actinide Collection and Pre-Concentration: Results of FY 2006 Studies*. PNNL-16213. Richland, WA: Pacific Northwest National Laboratory.

Lyon KN, TJ Marrow and SB Lyon. 2015. "Influence of milling on the development of stress corrosion cracks in austenitic stainless steel." *Journal of Materials Processing Technology* 218:32-37. DOI: https://doi.org/10.1016/j.jmatprotec.2014.11.038.

Mahoney M, S Sanderson, Z Feng, R Steel, S Packer and D Fleck. 2016. "Friction Stir Welding of Pipeline Steels." In *Friction Stir Welding and Processing VII*, pp. 59-69. eds: R Mishra, MW Mahoney, Y Sato, Y Hovanski and R Verma. Cham: Springer International Publishing. DOI: 10.1007/978-3-319-48108-1_7.

Mankari K and SG Acharyya. 2017. "Development of stress corrosion cracking resistant welds of 321 stainless steel by simple surface engineering." *Applied Surface Science* 426:944-950. DOI: https://doi.org/10.1016/j.apsusc.2017.07.223.

NRC. 2012. *Potential Chloride-Induced Stress Corrosion Cracking of Austenitic Stainless Steel and Maintenance of Dry Cask Storage System Canisters*. NRC Information Notice 2012-20. Washington, DC: U.S. Nuclear Regulatory Commission. Available at http://www.nrc.gov/docs/ML1231/ML12319A440.pdf. ADAMS Accession No. ML12319A440.

Perrett J, J Martin, J Peterson, R Steel and S Packer. 2011. "Friction Stir Welding of Industrial Steels." In *Friction Stir Welding and Processing VI*, pp. 65-72. DOI: 10.1002/9781118062302.ch9.

Richards DG, PB Prangnell, PJ Withers, SW Williams, T Nagy and S Morgan. 2010. "Efficacy of active cooling for controlling residual stresses in friction stir welds." *Science and Technology of Welding and Joining* 15(2):156-165. DOI: 10.1179/136217109X12590746472490.

Ross K, G Grant, J Darsell and D Catalini. 2017a. "Simultaneous Independent Control of Tool Axial Force and Temperature in Friction Stir Processing." In *Friction Stir Welding and Processing IX*, pp. 269-275. eds: Y Hovanski, R Mishra, Y Sato, P Upadhyay and D Yan. Cham: Springer International Publishing. DOI: 10.1007/978-3-319-52383-5_26.

Ross K and C Sorensen. 2013. "Advances in Temperature Control for FSP." In *Friction Stir Welding and Processing VII*, pp. 301-310. eds: R Mishra, MW Mahoney, Y Sato, Y Hovanski and R Verma. Ch. Chapter 31. Cham: Springer International Publishing. DOI: 10.1007/978-3-319-48108-1_31.

Ross K, B Sutton, G Grant, G Cannell, G Frederick and R Couch. 2017b. "Development of Friction Stir Processing for Repair of Nuclear Dry Cask Storage System Canisters." In *Friction Stir Welding and Processing IX*, pp. 39-46. eds: Y Hovanski, R Mishra, Y Sato, P Upadhyay and D Yan. Cham: Springer International Publishing. DOI: 10.1007/978-3-319-52383-5_5.

Sato YS, M Urata and H Kokawa. 2002. "Parameters controlling microstructure and hardness during friction-stir welding of precipitation-hardenable aluminum alloy 6063." *Metallurgical and materials transactions A* 33(3):625-635. DOI: 10.1007/s11661-002-0124-3.

Smith WF. 1993. *Structure and Properties of Engineering Alloys, 2nd Edition*, MI: McGraw-Hill Science/Engineering/Math. ISBN 978-0070591721.

Sorensen C. 2004. "Progress in Friction Stir Welding of High Temperature Materials." In *Proceedings of The Fourteenth International Offshore and Polar Engineering Conference*, pp. 8-14. May 23-28, 2004, Toulon, France. International Society of Offshore and Polar Engineers.

Sutton B, K Ross, G Grant, G Cannell, G Frederick and R Couch. 2017. "Friction Stir Processing of Degraded Austenitic Stainless Steel Nuclear Fuel Dry Cask Storage System Canisters." In *Energy Materials 2017*, pp. 343-351. eds: X Liu, Z Liu, K Brinkman, S Das, S Dryepondt, JW Fergus, Z Guo, M Han, JA Hawk, T Horita, P Hosemann, J Li, E Olivetti, A Pandey, RB Rebak, I Roy, C Shang and J Zhang. Cham: Springer International Publishing. DOI: 10.1007/978-3-319-52333-0_31.

Tiamiyu AA, U Eduok, JA Szpunar and AG Odeshi. 2019. "Corrosion behavior of metastable AISI 321 austenitic stainless steel: Investigating the effect of grain size and prior plastic deformation on its degradation pattern in saline media." *Scientific Reports* 9(1):12116. DOI: 10.1038/s41598-019-48594-3.

Turnbull A, K Mingard, JD Lord, B Roebuck, DR Tice, KJ Mottershead, ND Fairweather and AK Bradbury. 2011. "Sensitivity of stress corrosion cracking of stainless steel to surface machining and grinding procedure." *Corrosion Science* 53(10):3398-3415. DOI: https://doi.org/10.1016/j.corsci.2011.06.020.

Wang Z, Y Yan and L Qiao. 2015. "Tribocorrosion Behavior of Nanocrystalline Metals — a Review." *Materials transactions* 56(11):1759-1763. DOI: 10.2320/matertrans.M2015280.

Zhou N, R Pettersson, R Lin Peng and M Schönning. 2016. "Effect of surface grinding on chloride induced SCC of 304L." *Materials Science and Engineering: A* 658:50-59. DOI: https://doi.org/10.1016/j.msea.2016.01.078.