ASSESSMENT ON THE PRACTICALITY OF OFF-THE-SHELF VALVES FOR USE IN MOLTEN SALT

T. K. Howard, David Holcomb, Kevin Robb
Advanced Reactor Engineering, Oak Ridge National Laboratory
P.O. Box 2008, Oak Ridge, TN 37831-6165
howardtk@ornl.gov; holcombde@ornl.gov; robkr@ornl.gov

ABSTRACT

From the mid to late 1960s, the Molten Salt Reactor Experiment (MSRE) was operated at Oak Ridge National Laboratory (ORNL). The MSRE design is unique: instead of standard valves, freeze valves were used to isolate the fluid salt as needed. While standard valves were considered for use in the MSRE, key design challenges (leaking, corrosion, valve alignment, and cold-welding, etc.) were all avoided by choosing a freeze type valve. While the freeze valves were integral to the MSRE's success, they do not respond quickly, and they are not capable of throttling flow: two key features important to commercial operation and test facilities. More than half a century after the MSRE's inception, design and manufacturing capabilities have changed. There is a renewed interest in molten salts for energy storage in nuclear and concentrated solar power. Therefore, there is a strong desire to have a functioning valve that can be obtained off the shelf or with minimal modification to a custom valve. This research addresses the known challenges associated with valve selection in fluoride salts, provides guidelines as to potential options for selection of a valve, and uses these guidelines to select a valve for testing in ORNL's Liquid Salt Test Loop (LSTL).

KEYWORDS
MSR, Molten Salt, Valve, FLiNaK, Corrosion

1. INTRODUCTION

Since the initial development of nuclear reactors, molten salt has been of interest for use in reactor design. However, due to high temperatures and corrosive nature of molten salts, these reactors pose several design challenges to standard reactor components such as valves, pumps, flanges, flow meters, and pressure transducers. Some of these design challenges have been readily addressed so that the components are now commercially available for use. The paper focuses on one such component: mechanical valves.

1.1 Background

Molten salts are used in a variety of different industries; however, there has been a renewed interest in the use of halide salts in the power industry, particularly, for nuclear and solar thermal generation. Currently the solar industry uses nitrate (NO_3^-) based salts, which experience high temperatures (~550 °C), as well as corrosive environments. Many companies have developed mechanical valves that operate under these conditions.

This manuscript has been authored by UT-Battelle, LLC, under contract DE-AC05-00OR22725 with the US Department of Energy (DOE). The US government retains and the publisher, by accepting the article for publication, acknowledges that the US government retains a nonexclusive, paid-up, irrevocable, worldwide license to publish or reproduce the published form of this manuscript, or allow others to do so, for US government purposes. DOE will provide public access to these results of federally sponsored research in accordance with the DOE Public Access Plan (http://energy.gov/downloads/doe-public-access-plan).

The principal technical challenges associated with valves for molten salt are (1) to ensure the consistent alignment of parts during transitions from room to operating temperature, and (2) to select materials which will not corrode. Halide salts can dissolve oxide surface coatings, and the metallic surfaces of isolation valves are brought into direct contact with these salts. Over time and at sufficiently high temperature, the materials of the sealing surfaces intermix, causing the valves to stick closed.

At Oak Ridge National Laboratory (ORNL), the Liquid Salt Test Loop (LSTL) was developed to demonstrate technology for high-temperature fluoride salt (FLiNaK) systems, including valves and other components. A picture of the LSTL is presented in **Figure 1**.

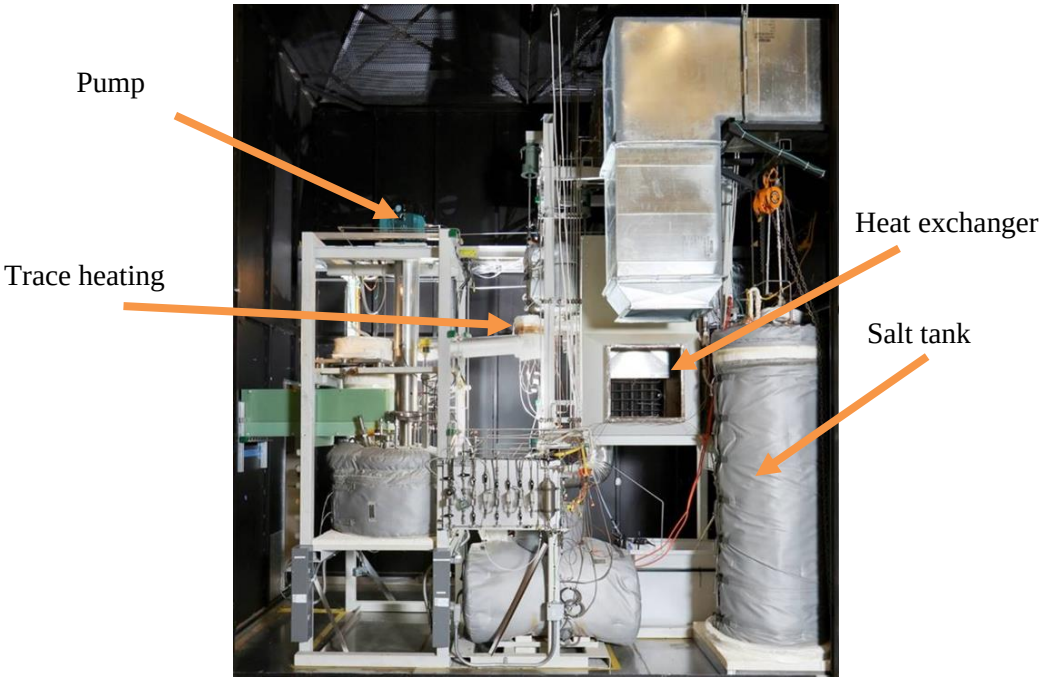

Figure 1. Liquid Salt Test Loop at ORNL.

The LSTL is primarily made from a high nickel alloy and operates up to 700°C. The facility's major components include a centrifugal pump for salt circulation, an air-based heat exchanger designed to allow for heat transfer tests, and trace heating to prevent salt freezing. Additional heating through a 200 kW induction heater may be used for pebble bed testing.

In addition to the LSTL, a small two-tank test unit exists for the purposes of calibration and testing components prior to their use on the LSTL. The two-tank test unit passes molten salt from one tank to the other. The test unit sits on a scale that is used to determine the flow rate of the test. Flow rates can be increased through pressurization of the first tank.

1.2 Historical Development Work on Mechanical Valves for Molten Salt Reactors (MSRs)

ORNL began work on high-temperature mechanical valves for molten salts in the early 1950s [1], as it was readily apparent that the valves were critical components for molten salt reactors (MSRs). According to Spiewak et al. [2],

> *The technical feasibility of circulating-fuel reactors is so dependent on the behavior and reliability of mechanical components that there is little likelihood that large-scale plants*

will be built before the performance of each piece of equipment has been adequately demonstrated. In this regard, the development of satisfactory valves, feed pumps, mechanical joints, and remote-maintenance equipment for large-scale plants appears to be most difficult.

ORNL originally developed a high-temperature fuel salt valve. The valve was fabricated from Inconel 600 and included a double bellows seal, which was used to balance the pressure against the fuel salt's fluid seal with inert gas. This is a design feature common to similar valves used today. It was discovered that the valve seat and plug would fusion bond when the valve was closed and held at temperatures above 650°C (1200°F) [3]. This prompted extensive screening to find materials resistant to potential corrosion and fusion bonding for high-temperature use. Molybdenum against tungsten or copper and several titanium or tungsten carbide-nickel cermets mating with each other proved to be satisfactory. Valves with very accurately machined cermet seats and poppets achieved leakage rates of less than 2 cm^3/hour in 51 mm (2 in.) molten-salt lines at 700°C (1300°F) [3]. Five valves were tested with a variety of seat-plug material combinations, accumulating over 7,000 hours of testing experience. The cermet materials were considered the most promising seat-plug combinations. This valve consisted of a spherical metal plug which fitted into a similar metal seat to form a seal. The positioning of the plug was accomplished by moving a stem through a bellows seal. Valve guiding was performed on the helium gas side of the bellows. During the tests performed in connection with this development, none of the valves consistently leaked less than l0 cm^3/hr [4].

In the early 1970s, the Molten Salt Breeder Reactor (MSBR) Program sought to minimize the impact of the fusion-bonding issue by using a rupture disk in parallel with the mechanical valve for emergency use, as well as a combination mechanical-freeze valve. A primary technical difficulty with the performance of molten salt freeze valves derives from the combination of the salt's low thermal conductivity and high heat capacity. The salt's physical property combination necessitates substantial cooling over time, resulting in a thick, frozen salt plug.

The combination mechanical-freeze valves used a poppet that was near a hard-faced surface but did not seat tightly against it. Instead, the valves relied on development of a thin frozen film to create a seal. Relying on the frozen film minimized the potential for valve sticking, and it also reduced the time required for valve operation. A cooling fluid was circulated through the poppet to freeze an annular ring of stagnant salt between the two faces. Then the circulating fluid would be heated to thaw the salt thus to open the valve [5]. The poppet would be electrically operated with a bellows sealed movement. As a result of the successful work-around, the study of valves for use with molten salts was suspended indefinitely by the MSBR Program in 1972.

Because mechanical valve development for this application was halted in 1972, MSRs have not been able to benefit from the resilient metal (with soft noble metal plating) and flexible carbon-based high-temperature seals that have been developed over the past several decades. Multiple vendors now provide metal-to-metal seals intended for service in aggressive chemical environments for the aerospace, nuclear, and chemical industries. Spring-energized metal seals are now commonly used in several valve applications, including body-bonnet connections, seats, pressure-balanced plugs, back-seat sealing, and stem sealing. However, there have been no reports of these developments being demonstrated specifically for halide molten salt service.

The historic MSR program never achieved development of a satisfactory, purely mechanical pipe closure valve. Galling, sticking, and leakage were unresolved issues. However, bellows sealed, sleeve-type mechanical throttling valves for up to ~100 mm piping for flow control were developed and successfully tested for over 100,000 hours.

In 2010, the US Department of Energy (DOE) Office of Nuclear Energy (NE) resumed work on purely mechanical molten salt closure valves by funding a Nuclear Energy University Project (NEUP) to develop carbide coatings for use as sealing surfaces in fluoride salt valves. The project was not successful in developing a hermetic carbide layer, resulting in salt undercutting the carbide layer and subsequent coating de-bonding [6]. DOE-NE–sponsored university efforts continue to develop dense, adherent carbide coatings for MSR structural alloys [7].

1.3 Mechanical Valves for Concentrated Solar Thermal

While most mechanical valve development for fluoride salts has revolved around nuclear reactors, other salt valves were being developed for use in concentrated solar power plants. Molten salt is a relative new technology for commercial solar thermal plants, with the first commercial plant coming online in the late 2000s [8]. Even though this is a recent development, valves for use in molten salts for solar thermal are readily available from a wide variety of vendors. The valves are not limited to a single design, but instead come in different styles and are made from a variety of materials.

This development could lead to the availability of off-the-shelf valves for use in other halide salts. There are two significant differences between the solar salts in use and molten salts for nuclear reactors. The first is the temperature difference. Current solar thermal plants that use molten salts operate at very high temperatures (upwards of 550°C), but they still do not reach the planned temperatures of some MSRs. Despite this, the temperatures are similar, so the valve design and materials must meet the needs of a very high temperature environment. The second more significant difference is that at higher temperatures, halide salts are much more corrosive than nitrate-based solar salts. Solar salt valves are designed with an oxide layer to prevent corrosion. This type of design is not a viable option for MSRs, as halide salts ultimately strip the oxide layer from the metal, resulting in standard corrosion problems. While there is a wide range of solar salt valves, no single solar thermal valve can be directly leveraged for use in halide salts at high temperatures.

2. VALVE SELECTION LIMITATIONS

The four most significant challenges to developing a valve to be used in molten salt are (1) designing a valve that properly functions at the desired temperature, (2) designing a valve that avoids freezing in the valve, (2) choosing materials that can withstand the molten salt environment, and (4) selecting materials that will prevent the valve from sticking in place. The following sections highlight these four challenges and discusses how they might be addressed.

2.1 Application Temperature

Temperature is an issue for molten salt valves due to two primary reasons: (1) the material must be able to withstand the temperature, and (2) the valve must be able to function under thermal expansion effects. In general, most material temperature limitations are well understood. The greater concern with temperature is to design the valve so that (1) thermal stresses will be minimal, and (2) the valve will function appropriately at the desired temperatures.

While temperature alignment is still a concern, it was a more significant concern during the early stages of molten salt use. Today, computational structural mechanics software is readily available for the design and development of valves, while during MSRE development and operation, simulations required dedicated computers. Along with new, well-developed tools, nearly 50 years of additional experience with high-temperature valve design and application means that valves can be designed for higher temperature applications given the appropriate materials. Several valves have been designed for use in

temperatures beyond that of the normal operation of most molten halide salts being considered for use in industry.

2.2 Salt freezing

Salt freezing within the body of the valve is a significant concern. Most valve designs include a region where fluid flow is substantially reduced or completely stagnated. In this region, the fluid is at its greatest risk of freezing within the line. Salt freezing is very problematic, as it interferes with valve's primary function. The valve may become damaged by constant wear from the freezing/breaking process, it may become sluggish in response, or it may fail to operate all together. Despite severe consequences for freezing in the line, freezing in the valve for halide salts may ultimately prove to be a non-issue. Several valves designed for nitrate salts use standard valve designs, despite the same freezing risk.

If freezing proves to be an issue for an off-the-shelf valve, then it is easily prevented by maintaining liquid temperatures at the surface of the valve. Consequently, the issue of freezing can be handled in the same manner that it is handled throughout the loop during heat up. If freezing in the valve is determined to be an issue, then tape heating around the valve can be used to ensure that local temperatures are not low enough to freeze the salt in the valve's body. This is the most readily employed approach when using an off-the-shelf-valve if needed.

2.3 Corrosion

Corrosion is one of the most challenging issues for valve selection. Only a few materials are viable for use in molten salts, and not all can be explicitly used at the temperatures desired. Not only does the selected material need to meet requirements for high-temperature applications, but it also must not degrade within a salt. Numerous studies report very different—often conflicting—rates of corrosion [9]. The lowest rates of corrosion are typically seen in high-nickel low-chromium alloys. This is generally due to the energy of formation, as higher energy states will always tend to lower ones. Nickel (II) fluoride has a much higher energy state than chromium (II) fluoride. In the case of this reaction,

$$NiF_2 + Cr \leftrightharpoons CrF_2 + Ni \ ,$$

chromium (II) fluoride is preferred to nickel (II) fluoride. The addition of any metal impurities will attack the lowest energy metal in the alloy, usually chromium. Furthermore, the general equilibrium reactions are based on temperature. In loops where there is a temperature difference, removal of elements occurs in the hot leg, and redeposition occurs in the cold leg. Thus, any impurity results in continuous corrosion.

In addition to corrosion resulting from metal impurities, oxygen is a significant contributor. Oxygen is introduced to the salt via production, air, or the natural metal oxide layer in the loop, and it will ultimately be absorbed into the salt, allowing for repeated oxidation and removal of the oxide layer on the metal surface.

All of the corrosion effects were examined for several years by Koger, who ran tests for over 32,000 hours (over 3.5 continuous years), demonstrating that corrosion for high-chromium alloys (SS 304L) could be minimized through salt purification and loop purging [10], even producing a lower corrosion rate than Hastelloy-N in an unpurified salt [9]. It is important to note that Koger's loop ultimately failed due to external oxidation instead of salt corrosion.

By and large, the largest driver for corrosion is the salt's impurity. As long as the material is not corroded by direct reaction with the salt (as would be the case for metals such as sodium or several oxides), the material is viable. Unfortunately, completely pure salts are not feasible, so material selection must be made based on an assessment of the salt purification process.

2.4 Cold Welding

Most isolation valves work by pressing two surfaces together to make a tight seal, thus avoiding fluid leakage. However, within molten salt, the metals are stripped of their oxide layer, allowing them to bond. Cold welding has been well studied in low pressure environments with a variety of metals for space applications. Tests run by the European Space Agency (ESA) showed a general trend between high nickel alloys and cold welding [11]. When they were cold welded, high nickel alloys required more contact force to be removed than normal steel components.

The only sources that discuss issues with cold welding relate directly to experiments performed in the early 1950s. While the valves used were not being tested explicitly for cold-welding effects, cold welding was noted as a significant issue [3]. A significant effort was devoted to the MSRE much later, which did not use mechanical valves [12]. Therefore, the effect of salt purity on cold-welding of the valves is unknown. It is possible that several of the issues with sticking and galling of the valves were related to corrosion of the valve itself, as the valves that fusion-bonded were using similar metals with a high chromium content.

Cold welding is the most difficult challenge for an isolation valve, as both the valve plug and seat must be able to resist corrosion, withstand high temperatures, and be dissimilar enough to resist bonding together when the valve is closed. Most off-the-shelf designs use similar plug and seat materials, which means that most isolation valves (at least metallic valves) are not viable without some form of customization.

3. POTENTIAL VALVE DESIGNS

While there is a wide variety of valves available, three different types were identified as the most reasonable options for throttling and isolation use in molten salt:

1. Metallic, sealed valves
2. Ceramic valves and components
3. Hybrid/combination valves

Discussions and examples of these valve types are presented in this section.

3.1 Metallic Sealed Valves

One of the most significant concerns for corrosion is that of the valve packing materials, which must allow a valve to open and close smoothly without fluid leaking. Most packing materials would be severely corroded by the molten salt. A common way of avoiding this issue for valves in corrosive or hazardous environments is to use a single or double bellows seal. An example of a double bellows sealed valve is shown in **Figure 2**.

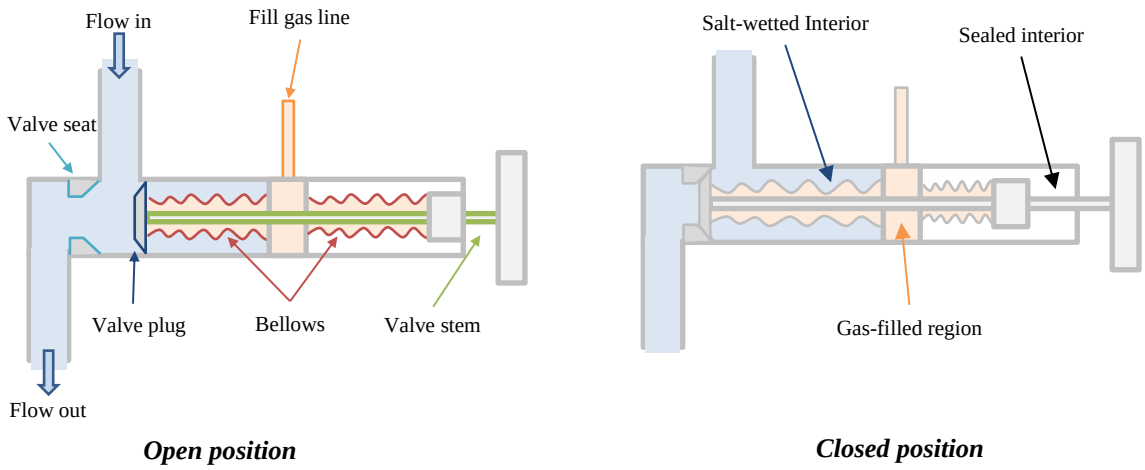

Figure 2. Example of a Double-Bellows-Sealed Globe Valve.

The stem and packing of a bellows sealed valve are isolated from the working fluid by a bellows. This allows the packing materials to use any material that can withstand the temperature without having to be resistant to salt corrosion. The addition of a second bellows (see **Figure 2**) allows an interim region to be filled with a pressurized gas. This gas allows the pressure between the loop and bellows to be balanced, and it provides a means of leak detection.

Since the valve requires a bellows, the valve design is restricted to the valve stems, which translate as opposed to rotate. Consequently, only certain valves types are viable for use, and globe valves appear to be the most promising candidate. The plug and seat design allow for minimum contact, reducing the likelihood of sticking, and allowing the parts to be somewhat interchangeable and replaceable.

3.2 Ceramic Valves and Components

One potential option is to replace metallic valves with ceramic-lined valves that may be used at high temperatures. Of particular interest are both silicon nitride and silicon carbide, which are options for high-temperature valve operation. Silicon carbide has been shown to perform better than Inconel 600 in FLiNaK [13]. While it is not as well studied, silicon nitride is readily available as a ceramic for lined valves and piping components. Use of ceramics solves the issue of cold-welding of the valve, either by replacing one of the metal parts with an inert ceramic or removing the metal constituents altogether.

Use of an all-ceramic valve has some limitations. Ceramic-lined valves must be properly integrated with the remainder of the loop piping. This would require either a completely ceramic-lined piping or integration of a ceramic-lined component with a metallic loop. This task is would be made easier if the valve body were made of the same material as the loop.

3.3 Mechanical/Freeze Hybrid Valves

One possible option is use of a mechanical valve to throttle flow and then freeze flow to add isolation. For throttling, the valve would operate as normal. When isolation is desired, a salt layer would either be frozen to the valve seat or between the plug and seat. This approach would avoid the issue of seat and plug bonding together as the plug and seat would never come into contact with each other. An example of such a valve is shown in **Figure 3**.

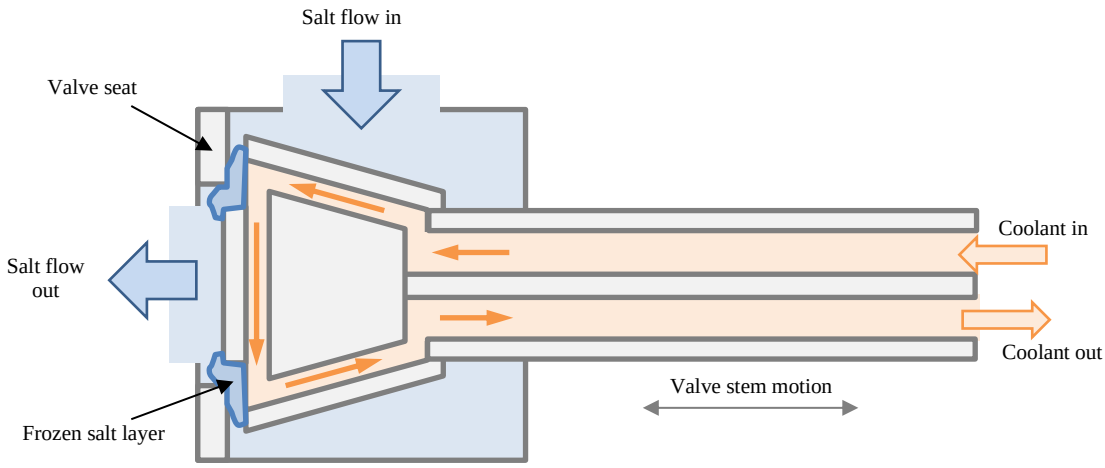

Figure 3. Example of a Hybrid Valve.

In **Figure 3**, isolation is achieved by bringing the valve in close proximity to the seat. At this point, coolant is circulated through the valve plug. The coolant and valve design allow for the salt to solidify and bridge the gap between the seat-plug interface. The coolant is heated to melting temperatures or greater to open the valve.

The valve design shown in Figure 3 was being considered for use in the MSRE prior to successful implementation of freeze valves [5]. The design hardly qualifies as an off-the-shelf design, but a throttle valve could be used to substantially reduce the flow with freezing, thus providing the final isolation.

4. VALVE TESTING

With multiple valve designs being considered, the purpose of this work is to establish a plan for selection and testing of an unproven, off-the-shelf valve.

4.1 Criteria for Valve Selection

To select a valve for testing, several key design criteria must be addressed:

1. The valve type must be applicable for a highly corrosive environment.
2. The valve must be able to function at the required operating temperatures.
3. Wetted valve components must be resistant to pure halide corrosion.
4. Wetted valve components must survive the desired life of the valve.
5. The valve seat and plug must not inhibit valve operation.
6. The cost of the valve must be reasonable.

The first two criteria are easily addressed and are the least limiting. Several valve designs exist and are readily available for both highly corrosive environments and the operating temperatures of most MSR designs. However, the third criterion—choosing valve components that are resistant to halide corrosion—is the first major hurdle in valve selection. Several corrosion-resistant, high-temperature valves use stainless steel with an oxide coating to prevent corrosion. Unfortunately, the oxide layer will readily dissolve in halides at temperature, so these valves should be avoided. Instead, a high-temperature valve of the designs listed in the previous section will suffice.

The fourth criterion is based on the salt's purity and desired application. If the application is over a short duration and the salt is reasonably pure, then most metals are viable. If longer duration is needed or if salt purity is not guaranteed, then high-nickel, low-iron/chromium alloys are preferred. Alternatively, a proven ceramic material could be used.

If the valve is needed for isolation, then the combination of valve seat and plug must not interfere with valve operation. The use of dissimilar metals, cermets, or ceramics appears to be a viable option. Individual components can be replaced or customized with these materials in order to avoid bonding the seat and plug.

The sixth and final criterion limits the valve design. While a variety of super-alloys and exotic metals may exist, their uses are ultimately restricted by budget. High-nickel alloys are more expensive than standard steels and are not typically used in off-the-shelf valves.

Regardless, valve selection is much more of an iterative process than a linear one. An example of a proposed iterative process is presented in Figure 4.

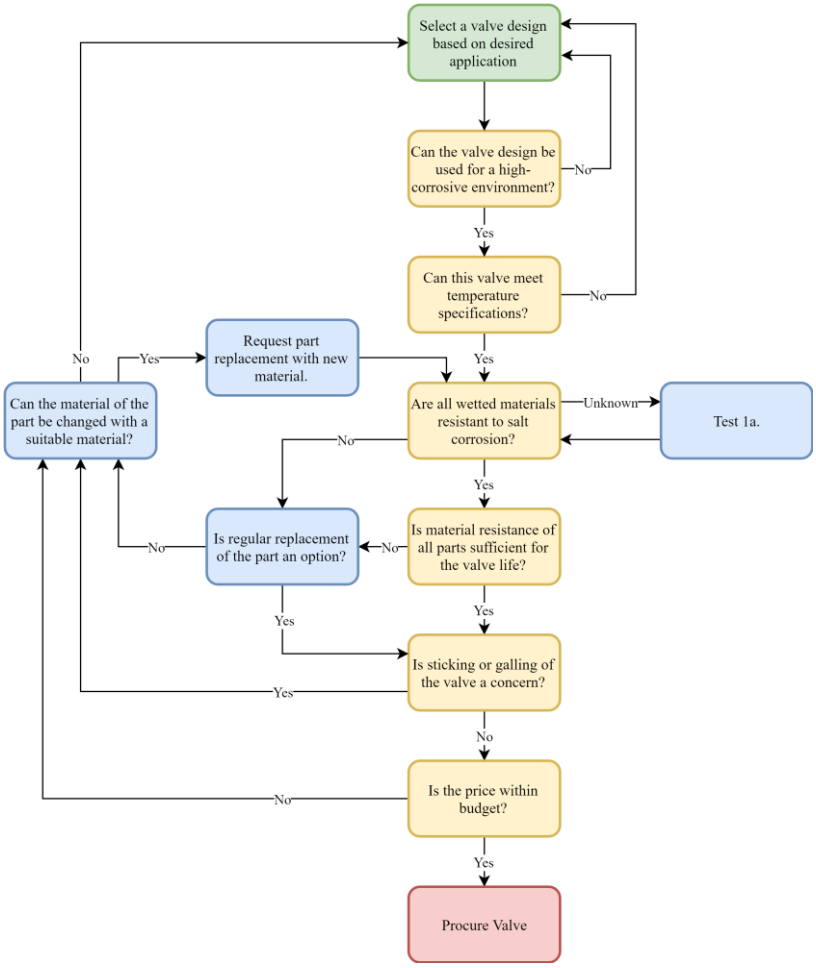

Figure 4. Valve Selection Process.

Figure 4 provides the general process for valve selection. Initiation of the valve selection process is in green, and finalization in red. The yellow boxes indicate questions that address the 6 criteria mentioned previously. The blue boxes provide additional steps and questions to address selecting a valve when an explicitly off-the-shelf valve is not available. Several valves are customizable and allow for parts to be replaced with other material.

The general flow of the processes is to select a valve based on the six criteria. The first two criteria questions are ultimatums, as there is no reasonable work-around for a valve that will not withstand the high temperatures or that will not function properly in a corrosive environment. The next three criteria questions address the expected use of the valve and the corrosivity of the salt being used. If the valve component's life in the salt is less than the desired lifetime of the valve, then there are three options: continuous replacement of the part, substitution of the part with a new material, or reselection of the valve being used. In the final case, in which valve sticking is a concern, regular replacement of the part is not a reasonable option.

Using these criteria, a valve was selected for use. The valve was a double bellows sealed Inconel 600 valve. Initial testing was set to examine the cold-welding effects in the molten salt. As replacement for the plug, molybdenum, tungsten, and silicon carbide, were being considered, but a different high-nickel alloy (Inconel 625) was to be tested first. The valve itself was not off the shelf, but it was customizable, and with enough commercial interest, such a valve would eventually be available off the shelf. The ceramic option looked promising, but it was not selected. However, silicon nitride samples were planned for corrosion testing. Such valves are being considered for future use. The hybrid style was not considered, because no off-the-shelf hybrid valve was found, and there is much to be gained by using a purely mechanical valve. The hybrid system may be desired for smaller loops for cost-effectiveness and certainty of design.

4.2 Valve Test Set Up

To test the valve in molten salt, two different experiment facilities will be used, the LSTL, and the two-tank test unit. For the two-tank test, the valve will be placed in line between two large tanks, and then one pressurization of the first tank will allow salt to flow between the two tanks. The flow will be measured based on the change mass of the second tank. For the tests in this set-up, the duration of the test will be limited based on the size of the tank and the desired flow rate. In the LSTL, the valve will be placed in a custom test section to be installed on the LSTL. The section will be a simple parallel section of piping which allows for the valve to be tested, and a second line will be left open or will have a valve attached in order to be left open and tested. An example of this configuration is shown in Figure 5.

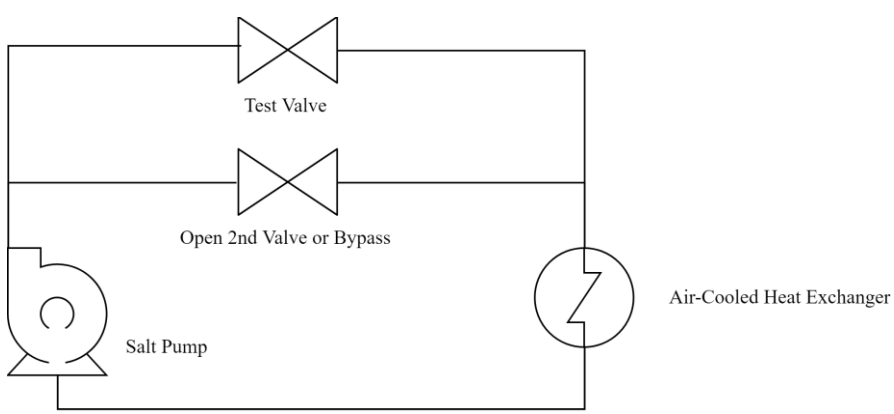

Figure 5. Example of Test Set-Up in LSTL.

4.3 Valve Testing

Four different testing phases were identified as relevant:

1. In the ***selection*** phase, the valve is selected and tests are performed on the available material (Test 1A), and well as the general functionality of the valve (Test 1B).
2. In the ***short-term testing*** phase, the two-tank test unit will be used. The two-tank test unit will use the same salt as the LSTL, so if salt purity is a significant concern, then it can be identified here (Test 2C). It is likely that corrosion will be insignificant due to the short duration of the two-tank test. The main goal of the short-term test is to identify any issues with freezing in the valve (Test 2A) and sticking when closed (Test 2B). If freezing is shown to be a significant issue, then trace heaters will be used help prevent it. If sticking is problematic, then the valve plug will be replaced with a potential substitute until adequate performance is achieved. If the valve performs sufficiently or can be altered to do so, then valve testing will move on to phase three.
3. ***Long-term testing*** will characterize valve performance in various throttle positions and general operation (Test 3A). Once the valve's general performance is characterized, then completeness of valve closure will be examined (Test 3B). The valve will be closed and opened several times. Once the valve has been shown to not stick in the closed position, then it will be held closed for longer and longer periods and then reopened until it has been determined that the cold-welding issue has been sufficiently avoided. The final test (Test 3C) will remove the valve from the LSTL and examine it for any areas that may show signs of corrosion. If the valve's integrity is proven, then the final phase can commence.
4. ***Operational use*** is the final, fourth phase, in which the valve will be used in the LSTL to support the testing of other components. Prior testing will have shown the valve to be reasonably reliable for use in molten salt. Throttle valves are very useful for controlling the flow of the loop and for developing a pump curve for the molten salt pump. During shut down and maintenance, the valve will be removed and continuously monitored for corrosion. A summary of the various tests is outlined in Table I.

Table I. Valve test campaign

Phase	Test	Description	Selection Criterion Addressed
1. Selection	A. Material corrosion test	For newer or unproven materials, corrosion testing will ensure the material's integrity in the salt	3 – Assess materials ability to avoid corrosion.
	B. Functional verification	Upon receipt of the valve, testing will be performed in a non-corrosive fluid to ensure that the valve functions as designed	1,2 – Ensures general valve design, seal tightness and temperature functionality.
2. Short-term testing (two-tank test unit)	A. Positioning and resistance	The valve position will be changed, and flow will be initiated to examine freezing potential and heating effectiveness at different positions	2 – Examines valve functionality at temperature.
	B. Isolation	The valve will be cycled open and closed in the presence of salt to determine if it sticks when it is closed	5 – Brings valve materials briefly into contact

	C. Short-term corrosion testing	The valve will be exposed to flowing salt and examined after testing to determine if any significant corrosion occurred	3,4 – Corrosion resistance is examined, and life-expectancy is determined.
3. Long-term testing (LSTL)	A. Throttle testing	Valve will be throttled under flow conditions	2 – Valve performance examined at temperature and flow.
	B. Isolation duration	The valve will be cycled on and off at varying intervals to determine the effect of sticking and the force required to re-open the valve	5 – Longer duration isolation is examined as diffusion is time-dependent.
	C. Long-term corrosion testing	The valve will be left at a desired position in the loop and examined after testing to determine the level and significance of corrosion	1,4 – Determines corrosion issues and valve design flaws.
4. Operational use (LSTL)	Testing support	Upon successful performance in phase 3, the valve will be used to assist in the assessment of other components such as the development pump curve	6 – Determines the valve's value and abilities for different tests.

5. CONCLUSIONS

An extensive literature review on valves and materials performance in relation to molten halide salts was conducted. The review was synthesized and related directly to valve performance, a valve was type selected, and a generic test plan was described for the purposes of testing valves. To date, and to the best of the authors' knowledge, no commercially available mechanical valve can be used in standard molten halide salts. Therefore, any throttle valve design could theoretically work in halide salts if the salt is sufficiently pure and the metal will not corrode. If resistance to corrosion is proven, then off-the-shelf valves or valves with a small amount of customization are practical.

Unfortunately, proving corrosion resistance must be done on a batch-by-batch, loop-by-loop basis. Several studies over the years have presented somewhat conflicting results that are extremely dependent on the boundary conditions imposed by the systems.

Beyond simple corrosion, there is a gap between isolation valves and throttle valves. Sealed throttle valves were shown to work during development of the MSRE, and most valve companies offer valves for high-temperature corrosive environments that can be readily altered to fit the needs of halide salts. There are very limited studies on cold welding in molten salts, but if studies are performed, then they may likely relate back to the vacuum cold-welding test database provided by the ESA. If so, then considerations for valve design are substantially easier to make. Once this mechanism is better characterized, then isolation valve development for molten salt will be significantly closer to being achieved.

The final sections of this report address the six primary criteria for valve selection and a proposed test plan. The criteria are based on the most significant challenges for valve use in molten salt. Each criterion is addressed, and potential work-arounds are provided if the off-the-shelf valve is unable to meet certain criteria. The proposed test plan is based on the facilities available at ORNL, but the general phases can be extended to any molten salt facility. Future work includes implementation of the test plan with the selected valve, as well as testing of various materials for different halide salts. Once a valve has proven to

be viable, then much more research can be done to determine compatible materials for use in high-temperature halide salts.

6. REFERENCES

[1] H. R. Johnson, "Valve and Pump Packings for High Temperature Fluoride Mixtures (ORNL Y-F17-28)," Oak Ridge National Laboratory, Oak Ridge, 1952.

[2] I. Spiewak, "Component Development," in *Fluid Fuel Reactors*, Reading, Addison-Wesley Publishing Company, Inc., 1958, pp. 445–448.

[3] H. W. Savage, W. F. Boudreau, E. J. Breeding, W. G. Cobb, W. B. McDonald, H. J. Metz and E. Storo, "Equipment for Molten-Salt Reactor Heat Transfer Systems," in *Fluid Fuel Reactors*, Reading, Addison-Wesley Publishing Company, Inc., 1958, pp. 667–668.

[4] S. Dunlap and A. G. Grindell, "Components and Systems Development for Molten-Salt Breeder Reactors," ONRL-TM-1855, Oak Ridge National Laboratory, Oak Ridge, 1967.

[5] E. S. Bettis, L. G. Alexander and H. L. Watts, "Design Studies of a Molten-Salt Reactor Demonstration Plant," ORNL-TM-3832, Oak Ridge National Laboratory, Oak Ridge, 1972.

[6] D. Nagle, Zhang and Dajie, "Carbide Coatings for Nickel Alloys, Graphite and Carbon/Carbon Composites to Be Used in Fluoride Salt Valves," John Hopkins University, Baltimore, 2015.

[7] K. J. Chan, R. Ambrecht, W. T. Choi and P. M. Singh, "Effects of Pre-Oxidation and Carburization on Corrosion in Molten Fluoride Salts," in *Corrosion* 2018, Phoenix, 2018.

[8] M. Roeb, M. Neises, N. Monnerie, C. Sattler and R. Pitz-Paal, "Technologies and Trends in Solar Power and Fuels," *Energy and Environmental Science* **2011**(4), pp. 2503–2511, 2011.

[9] S. S. Raiman and S. Lee, "Aggregation and Data Analysis of Corrosion Studies in Molten Chloride and Fluoride Salts," *Journal of Nuclear Materials* **511**, pp. 523–535, 2018.

[10] J. Koger, "Evaluation of Hastelloy N Alloys After Nine Years Exposure to Both a Molten Fluoride Salt and Air at Temperatures from 700 to 560°C," Oak Ridge National Laboratory, Oak Ridge, 1972.

[11] A. Merstallinger, M. Sales, E. Semerad and B. D. Dunn, "Assessment of Cold Welding Between Separable Contact Surfaces Due to Impact and Fretting Under Vacuum," European Space Agency, Paris, 2009.

[12] V. Ignatiev and A. Surenkov, "Material Performance in Molten Salts," in R. J. M. Konings, *Comprehensive Nuclear Materials*, Vol. 5, Elsevier, 2012, pp. 221–250.

[13] G. L. Yoder, D. Heatherly, D. Wilson and M. Caja, "FLiNaK Compatibility Studies with Inconel 600 and Silicon Carbide," *Nuclear Engineering and Design* **307**, pp. 172–180, 2016.