Project No. 14-6950

Nuclear Technology R&D Strategies in an Era of Energy Price Uncertainty

Fuel Cycle Research and Development

Sheldon Landsberger
University of Texas, Austin

Collaborators
Massachusetts Institute of Technology

Kenneth Kellar, Federal POC
Ed Hoffman, Technical POC

NEUP Nuclear Energy University Programs
U.S. Department of Energy

Nuclear Technology R&D Strategies in an Era of Energy Price Uncertainty

Final Report
January 15, 2019

Award Number: DE-NE0008276
Project Number: NEUP 14-6950
Reporting Period: January 2015–September 2018

Principal Investigator: Prof. Sheldon Landsberger[1]
Collaborators: Dr. Charles W. Forsberg[2]
Dr. Farshid Shahrokhi[3]
Report Authors: Prof. Sheldon Landsberger[1]
W. Neal Mann[1]

[1] Walker Department of Mechanical Engineering, The University of Texas at Austin
[2] Department of Nuclear Science & Engineering, Massachusetts Institute of Technology
[3] Framatome, Inc.

Summary

This project assessed technology strategies for nuclear power plants that could improve economic competitiveness in uncertain future electricity markets. Heat storage is a promising class of technologies that would allow reactors to produce steam at maximum power while giving the plant operator the flexibility to sell more electricity at higher prices.

We used the Texas (ERCOT) and New England (ISO-NE) electricity markets to evaluate future market scenarios for heat storage. Hourly unit commitment and capacity change models were used to model short- and long-term market dynamics.

Three heat storage technologies were identified as the most promising for near-term deployment with existing light-water reactors: steam accumulators, two-tank molten salt storage, and high-temperature-compatible concrete. We developed technoeconomic models for each of these technologies to estimate direct, overnight capital costs based on the output power [MW], energy storage capacity [MWh or GJ_{th}], and heat loss rate [%/hr].

Our modeling results found that adding heat storage to a nuclear power plant could increase net revenue in some cases. The greatest improvements were seen when increasing the heat storage power output with a separate steam turbine. Increasing energy storage capacity was beneficial through 12 hours of full-output storage time, but there was little to no benefit for higher energy/power ratios. High natural gas prices as well as increasing amounts of solar PV and wind were both beneficial to storage economics, while high demand and load growth and a carbon tax were helpful in some scenarios.

We recommend that heat storage systems for nuclear power plants be developed with multiple future markets in mind, namely electricity generation, operating reserves, long-term capacity, and industrial heat. Heat storage system Integration risk should be mitigated early in the development process to accelerate deployments.

Contents

Summary iii
1 Introduction 6
2 Energy Sector Scenarios 8
3 Electric Grid Modeling 9
3.1 Hourly Unit Commitment and Dispatch Model 9
3.2 Capacity Change Model 13
4 Nuclear Heat Storage Strategies 14
4.1 Common Methods 15
4.2 Steam Accumulators 16
4.3 Molten Salt 18
4.4 Concrete 18
4.5 Comparisons 20
5 Heat Storage Construction and Dispatch Modeling Results 21
6 Nuclear Strategy Recommendations 23
6.1 Capacity Payments 23
6.2 Heat Storage for Direct Heat Sales 23
6.3 Market Uncertainty and Development Risk 24
7 Conclusions and Future Work 26
8 Project Contributors 27
8.1 Faculty and Staff 27
8.2 Graduate Students 27
8.3 Undergraduate Students 27
9 Publications 28
9.1 Journal Articles 28
9.2 Conference Proceedings, Peer Reviewed 28
9.3 Technical Reports 30
9.4 Theses and Dissertations 30
10 Presentations 31
10.1 Contributed Presentations and Posters 31

10.2 Invited Presentations and Seminars 31
References 33
Acronyms and Abbreviations 35

1 Introduction

Heat storage systems coupled to nuclear power plants could improve overall power plant economics in challenging market conditions. Heat storage allows reactors to operate at full power continuously while giving plant operators flexibility to sell steam and/or electricity at the maximum price instead of simply taking the prevailing price. Revenues could come from electricity generation from the reactor steam, electricity generation from heat storage, operating reserves from heat storage, and capacity payments from the reactor and heat storage with an auxiliary boiler.

Figure 1.1 is a schematic of one possible configuration of a hybrid nuclear–heat storage system that sells only electricity. During times of low prices, some of the primary reactor's steam is diverted to the heat storage system. The reactor remains at maximum output while the turbogenerator is kept at part load. When prices exceed some threshold, all reactor steam is directed to the turbogenerator, and the heat storage system is on standby. At times of high prices, the reactor continues to produce steam at maximum power, and the heat storage system releases additional steam to the turbogenerator, increasing total electricity output. In this design, there is excess capacity in the primary turbogenerator that can be fed by the heat storage system. However, a separate steam turbogenerator could be dedicated to the heat storage system.

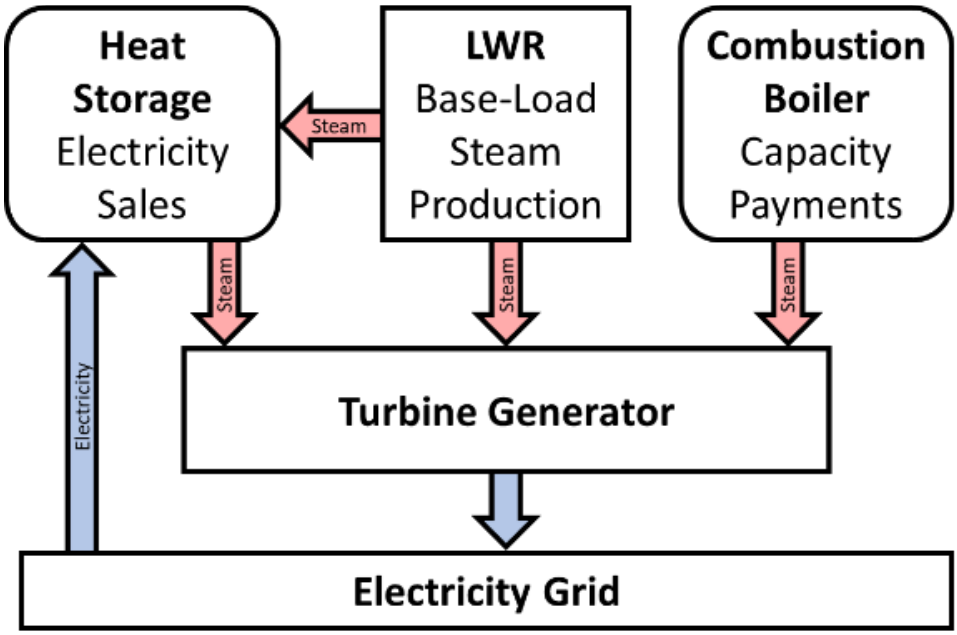

Figure 1.1. Light water reactor (LWR) with heat storage and added capacity for variable electricity production.

Nuclear power plant operators need new strategies because the “baseload” operating mode is being challenged in two ways: low and declining natural gas prices lead to low average electricity prices; and more intermittent solar PV and wind generation lead to more volatile prices as well as depressing prices when they are producing. These market effects are contributing to retirements of existing nuclear power plants, and they are making the economics of new nuclear plants more challenging.

This project examined the options for nuclear power plants to remain competitive in diverse future electricity markets by utilizing heat storage. We emphasized existing light-water reactor technologies, but the results are broadly applicable to other reactor types as well. Section 2 gives an overview of the energy markets analyzed, while Section 3 describes the electricity market models. Section 4 details the modeling methods for the selected heat storage systems, and section 5 presents economic modeling results for the heat storage systems under diverse market conditions. Section 6 is a summary of recommendations for reducing the development risk for heat storage systems coupled to nuclear power plants. Section 7 gives overall conclusions and recommends future work. Section 8 is list of project contributors, and Sections 9 and 10 present the publications and presentations that arose from the project.

2 Energy Sector Scenarios

We collected historical, current, and forecast electricity market data to serve as inputs for the electric grid models. These data included load, generation capacity, and ancillary service requirements.

We considered three different electricity markets for different parts of this project: the Electric Reliability Council of Texas (ERCOT), ISO New England (ISO-NE), and the Western Electricity Coordinating Council (WECC). ERCOT was chosen for the most detailed modeling for three reasons: 1) ERCOT has high wind penetration which is expected to grow further over time; 2) we leveraged a validated model of the ERCOT grid from independently-funded collaborators at UT Austin as a jumping-off point; 3) ERCOT is large enough to show a variety of behavior while being small enough to model on workstation-class computers. ISO-NE was selected as a comparison to ERCOT as a similar market type (ISO) with a very different generation mix and outlook for energy storage. Although we obtained a complete, validated dispatch model of WECC, it proved too large to run on available computers.

In competitive wholesale electricity grids, there are three main markets for generators and storage systems: energy (generation), long-term capacity, and ancillary services. This project primarily focused on energy markets, as it was expected to make up a large majority of revenue for both nuclear power plants and associated heat storage systems. However, we found that operating reserves might provide significant revenue in some cases [1].

The potential for storage systems to participate in long-term capacity markets is unclear and rapidly evolving, so we did not consider this as a potential revenue stream. However, some types of very-large-scale heat storage systems–like artificial geothermal–have very low incremental energy costs, like pumped hydroelectric. Therefore, they may be able to scale up to provide seasonal capacity if the economics are favorable. However, these will still have to compete against high operating cost, low fixed cost generators using fuels like natural gas.

3 Electric Grid Modeling

3.1 Hourly Unit Commitment and Dispatch Model

We used PLEXOS [2], and AuroraXMP [3] for hourly electricity dispatch simulations. Both are widely used across industry, academia and government. The two codes were used as confirmation against each other's results, as well as against historical generation data from ERCOT. We calibrated the set of common inputs for both codes to move forward with each from equal footing. We completed a sensitivity study of the ERCOT system including perturbations to wind penetration and natural gas pricing.

Our baseline generator database used data from year-end 2015, with natural gas, wind, subbituminous coal, lignite coal, and uranium making up the top five fuels by installed capacity (Table 3.1). Data was reconciled from a variety of sources:

- *Department of Energy*: CHP Installation Database
- *Energy Information Administration (EIA)*: Form 860, Form 923, Electric Power Monthly
- *Environmental Protection Agency*: Greenhouse Gas Prevention of Significant Deterioration Permits
- *ERCOT*: Capacity, Demand and Reserve Reports; Generator Interconnection Status Reports
- *Federal Energy Regulatory* Commission: Energy Infrastructure Updates
- *Public Utility Commission of Texas*: List of Generators Completed Since 1995, ERCOT Interconnection Agreement Filings
- *SNL Financial*: Power Projects Database
- *Solar Energy Industries Association*: Major Solar Projects List
- *Texas Commission on Environmental Quality*: Turbine List, Greenhouse Gas Permitting
- *TexasAhead*: School District Tax Petitions

Table 3.1. 2015 ERCOT installed generation.

Fuel Type	Net Capacity 2015 [MW]	Primary Mover
Biogas	45	Internal Combustion Engine
Biomass	105	Steam Turbine
Coal, lignite	7,142	Steam Turbine
Coal, subbituminous	12,637	Steam Turbine
Natural Gas	51,078	Combined-cycle Gas Turbine, Internal Combustion Engine, Open-cycle Gas Turbine, Steam Turbine
Solar	228	Photovoltaic
Water	533	Hydraulic Turbine
Wind	16,288	Wind Turbine
Uranium	5,133	Steam Turbine
Total	93,189	

Wind generator output profiles were created based on an hourly dataset produced by AWS Truepower for ERCOT. Profiles were synthesized for each Texas county with existing or planned wind farms, over 70 in total. This allowed for a good spatial variability in the weather patterns while still limiting the number of sites to model. Likewise, solar PV profiles were created using weather inputs for seven airport weather stations. All solar PV units were assumed to be single-axis tracking arrays.

ERCOT has only limited connections to neighboring electricity grids. A total of 3,300 MW of capacity is installed at four switchable plants in ERCOT. These can switch output between different grids given sufficient lead time. One plant can switch to the Midcontinent Independent System Operator (MISO), two can switch to the Southwest Power Pool (SPP), and one can switch to Comisión Federal de Electricidad (CFE in Mexico). All were assumed to be connected to ERCOT except for Frontera, which announced its intention to switch to CFE in 2016. Additionally, there is a set of nearly 9,000 MW of combined heat and power (CHP) generators that are associated with industrial manufacturing plants. We used EIA Form 923 data to update available capacities based on their historical 2010–2014 power generation.

Loads were distributed across eight separate load zones that are interconnected with a simplified transmission network with basic capacity constraints.

This allowed us to more accurately model power flows and prices out of West Texas and other areas with large amounts of variable wind capacity.

The baseline ERCOT scenario was built around the ERCOT Long Term System Assessment (LTSA) 2016 Current Trends scenario[1], with some parameters from the 2014 LTSA used instead. Our Current Trends scenario started with the generators in place at the end of 2015. Retirements by 2030 were included based on cash flow from the long-term capacity expansion results. Next, generation projects under construction were added. For the future load curve, we scaled historical load curves by expected peak and energy. Finally, a long-term capacity expansion model was run which includes future build prices.

Our second scenario built on Current Trends by adding an aggressive but realistic expansion of the renewables portfolio (wind and solar PV). The ERCOT LTSA does not have a specific scenario which is directly analogous, but characteristics from several of their scenarios were employed including the Environmental Mandate, High Energy Efficiency/Distributed Generation, and High Storage/Electric Vehicle Adoption scenarios:

- More technological improvement than "current trends" (faster decline of capex)
- Continued tax credits (production/investment) for renewables
- Continued decrease in solar capex
- Increased wind CF (note that this is in addition to increasing the installed capacity)
- Increased storage, both grid-level and plant-level will be considered

Additional capacity for wind (13,401 MW) and solar (2,162 MW) were added based on near-future generator projects that had interconnection agreements, were under active development, or had been publicly announced.

Figure 3.1 shows the price duration curves for hourly dispatch simulations of the Current Trends and Aggressive Renewables scenarios. The Aggressive Renewables scenario has many more hours of low and even negative prices compared to the Current Trends scenario. Note that scarcity prices were not modeled in these scenarios[2].

[1] See "2016 LTSA Update", http://www.ercot.com/calendar/2015/12/15/31834-RPG
[2] ERCOT has implemented an Operating Reserve Demand Curve (ORDC) to force the wholesale market price higher during times of low reserves. Generators may bid higher than their operating costs due to gaming behavior like exercising market power.

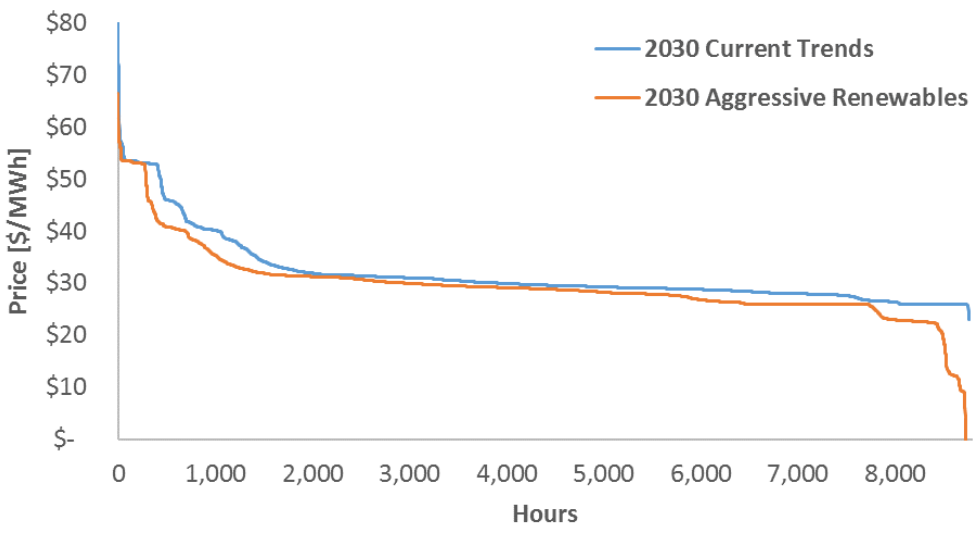

Figure 3.1. Price duration curves for Current Trends and Aggressive Renewables.

Figure 3.2 shows a comparison of the energy generated by fuel type for the two scenarios. Note especially the increased energy from wind at the expense of natural gas, while solar remains a small fraction of total energy. In both scenarios, wind overtakes the output from the Comanche Peak and South Texas Project nuclear power plants by 2030. In fact, total wind output surpassed nuclear output in ERCOT for the first time in 2015.

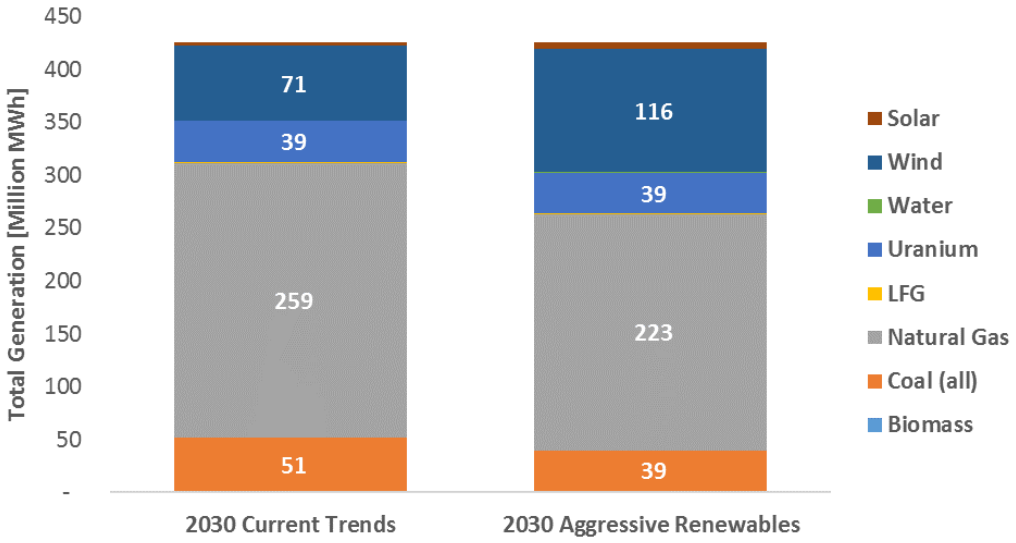

Figure 3.2. Energy generation by fuel type.

3.2 Capacity Change Model

We developed a long-term capacity change model in PLEXOS to evaluate different scenarios of system evolution. Capacity change models—also known as capacity expansion models—are used by the National Renewable Energy Laboratory [4] and others to simulate the construction and retirement of power plants over a multi-year time horizon. Our approach projects capacity changes via system cost minimization using a mixed integer program for optimization.

We used the ERCOT hourly production cost model as the basis for the capacity change model. This allowed us to leverage technical and cost data gathered previously (e.g., heat rates, variable operations and maintenance (O&M) costs). Since capacity change models focus on long-term power plant construction and retirement, we had to gather and assign additional parameters to capture trends over many years. For existing plants, we used fixed O&M and start costs from the production cost model.

For new power plant construction, we included biomass (steam turbine); coal integrated gasification combined cycle (IGCC) and steam turbine; natural gas combustion turbine and combined cycle; nuclear pressurized water reactor (PWR); solar PV; and onshore wind. Financing parameters included overnight capital cost, loan lives and interest rates, inflation rate, and federal tax credits for solar PV and wind. Additionally, constraints on construction lead times and the number of units built per year were estimated based on historical data by plant type.

From literature reviews, we found that long-term modeling results were most sensitive to fuel prices, electricity load and demand changes, and overnight capital costs for new construction. Thus, we used forecasts from EIA, ERCOT, the International Renewable Energy Agency (IRENA), and others to simulate different combinations of high and low prices/costs for each of these three parameters. Additionally, we modeled a carbon tax based on a social cost of carbon.

4 Nuclear Heat Storage Strategies

Energy storage systems can fill many different niches in the electricity grid, and these are mostly determined by the energy capacity [MWh], discharge rate, and the output power [MW]. Table 4.1 gives a list of the services that different energy storage systems can provide, grouped by discharge rate and grid sector.

Table 4.1. Select services provided by energy storage systems. Based on data from [5, 6, 7, 8].

Discharge Rate	Generation Services	Transmission & Distribution Services	Demand Services
Fast (seconds–minutes)	Frequency regulation Governor response Inertial response Voltage support (reactive power)	Voltage support (reactive power)	Power quality
Intermediate (minutes–hours)	Load following Non-spinning reserves Solar integration Spinning reserves Supplemental reserves Wind integration	Solar integration	Backup power Solar integration
Slow (hours–months)	Black start Generation capacity Seasonal storage (mothball replacement) Generation time-shifting	Capital investment deferral Congestion relief Distribution outage avoidance	Demand charge reduction Demand time-shifting Time-of-use charge reduction

Large-scale energy storage systems would obviously play in the energy market for time-shifting the low-cost, early morning generation to the higher-demand afternoon hours. One solution to increase revenue is known as benefit stacking. This means that an energy storage system could provide more than one revenue stream. In addition to time-shifting, large-scale energy storage systems

could participate in ancillary services markets, especially for spinning and non-spinning reserves. In an ERCOT scenario with 29 GW of wind and 10 GW of solar PV capacity, we found that a nuclear heat storage system could receive up to 40% of its revenue from operating reserves [1]. Large-scale thermal energy storage could also be an alternative to transmission construction in a congested area.

Energy storage technologies can be grouped based on the form of stored energy: mechanical, electrochemical, electrical, thermochemical, and chemical [9]. Heat storage is a type of mechanical energy storage. The primary advantage of heat storage is that materials that can withstand high temperatures are relatively cheap. It also allows the close integration of energy storage into thermoelectric power plants, like plants featuring batteries with solar PV or wind.

The workshop "Light Water Reactor Heat Storage for Peak Power and Increased Revenue" [10] held at MIT in late June 2017 identified six thermal energy storage (TES) technologies that could be deployed in the near term: steam accumulators, sensible heat fluids (including molten salts and heat transfer oils), countercurrent packed beds, liquid air (steam for heating the expanded air), crushed rock beds, and artificial geothermal. Steam accumulators, molten salts, and mineral-oil-based TES are successfully deployed as heat transfer fluids and/or energy storage media in commercial concentrating solar power plants.

This work focused on three technologies that we believe will have the lowest cost per unit thermal energy stored [$\$/GJ_{th}$] for nuclear power plants—steam accumulators, two-tank molten salt storage, and high-temperature concrete. For example, Westinghouse now has an in-house engineering team examining a concrete heat storage medium with mineral oil as the heat transfer fluid to couple with a light water reactor [10].

4.1 Common Methods

Although we modeled three different heat storage technologies, many of the underlying thermodynamic and economic properties are common across two or three models.

The energy density properties of the heat storage materials included the specific heat capacity and latent heat capacity (steam accumulator only). Heat transfer properties included the material density, thermal conductivity, and the maximum change in temperature from fully charged to fully discharged (100 K). We also verified that the materials were compatible with the operating range

(180–280 °C): well above the freezing point, and well below the boiling point or other decomposition temperature.

Containers for the heat storage materials were either ASTM A139 Grade E steel pipe (32" O.D., 5/8" thickness) for the steam accumulators and concrete, or ASTM A516 Grade 70 steel for molten salt. These were chosen for their high-pressure compatibility (A139 E) or their structural and corrosion compatibility (A516 70). Calcium silicate insulation was chosen for its good insulating properties and reasonable cost.

Baseline cost data for these components was taken from an IRENA study [7] or via separate research. Foundations and balance of plant costs were assumed to scale from the baseline [7]. Subsystem costs were either scaled via an exponential function (argument 0.6 or 0.7), a linear function, or as integer multiples. Finally, system materials costs were multiplied by 4/3 to estimate labor and project management costs (other studies found labor and project costs to be an additional 30–36% of direct costs).

Heat loss rates were calculated using free convection with air at 20 °C. Radiative heat loss was also calculated, but it was found to be negligible. Insulation thicknesses were calculated for target heat loss rates of 0.1%/hr and 0.01%/hr. These loss rates are typical of contemporary grid-scale lithium ion batteries.

4.2 Steam Accumulators

We developed a system dynamic model of a very large-scale steam accumulator bank consisting of dozens of kilometers of large-diameter pipe of the type used in natural gas pipelines. The pipe would be cut in ~100 m segments and stacked in arrays inside an insulated building. The model calculates the accumulator pressure drop for a given pipe length to attain a targeted capacity and discharge rate with minimized life cycle costs. Figure 4.1 shows a high-level piping diagram. For a given quantity of energy to be discharged, a system that is too small will be suboptimal since the pressure and temperature drop during discharge will result in a considerable Rankine efficiency penalty. A system that is too large, on the other hand, will suffer from larger heat losses as well as higher overall capital costs.

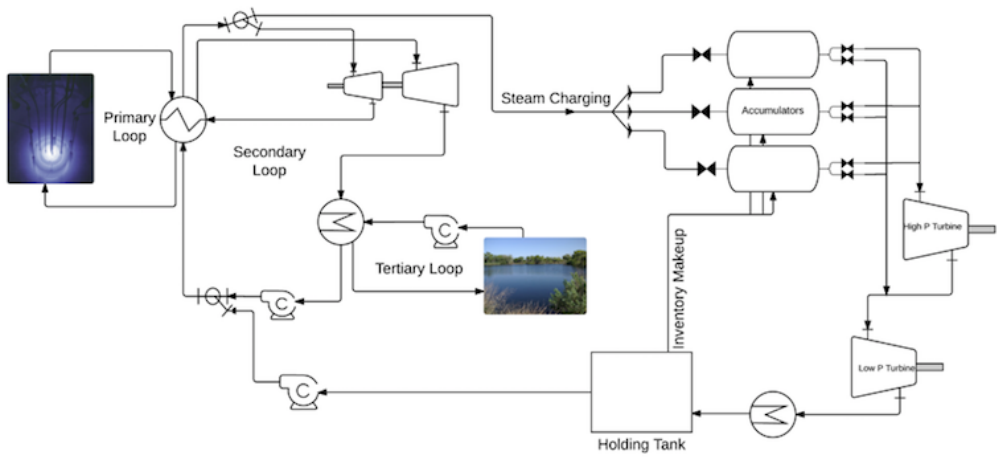

Figure 4.1. Schematic of a nuclear power plant with steam accumulator storage system.

The accumulator layout consists of lengths of welded steel pipe stacked into an array formation (Figure 4.2). A representative bank of pipe is highlighted in red in the figure. To minimize heat losses, the building containing the pipe array would be surrounded by insulation. Incorporation of a solid or phase change energy storage material—e.g., a salt with an appropriate melting point—into the interstices between the pipes would further enhance storage capacity. The pipe is 32 inches in outer diameter and is 5/8 inch thick. This is the largest pipe size that can withstand the required pressure with an appropriate safety factor. Large pressure vessels or vaults were considered for saturated steam storage, but since pipeline is already produced at high volume, this alternative avoids custom-designed or excavated containers.

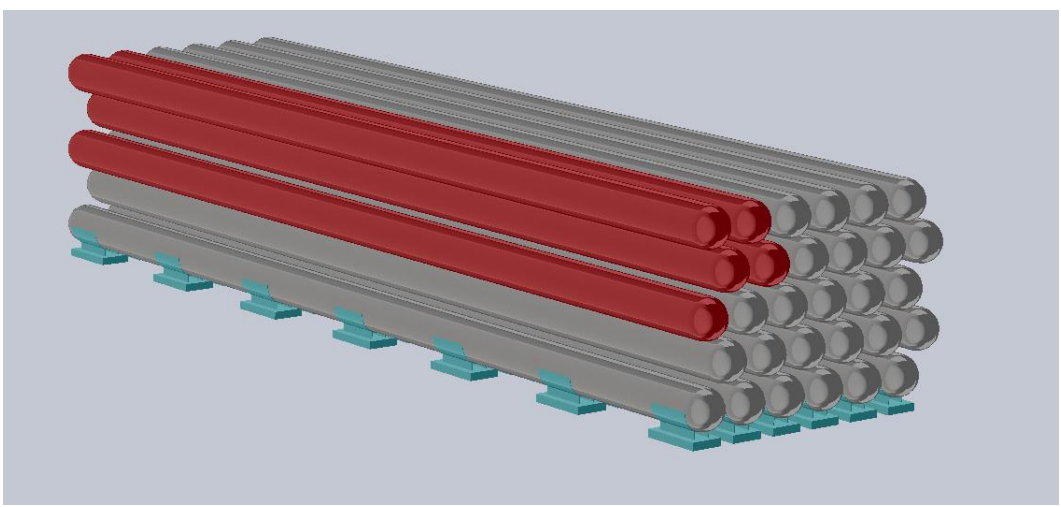

Figure 4.2. Schematic of a bank of steam accumulator pipes.

The thermodynamic model of the accumulator system simulates its behavior during charging and discharging cycles. The cycle is designed so that the power

output of the system remains constant, so that the mass flow rate from the accumulator bank increases as the pressure of the fluid remaining in the bank drops. A longer pipe length than the one assumed in this illustrative case will experience a smaller pressure drop and thus a smaller drop in efficiency during discharge. Short pipe lengths will experience larger drops in efficiency due to larger drops in pressure, but system capital costs will be lower. The temperature swing in the accumulator was 180–280 °C.

We also developed a simple economic model of the accumulator–power plant system. The combined models can be used to optimize the design of the accumulator (pipe length, operating pressure and initial quality, duration of charging and discharging cycles) to maximize system revenue. We considered scenarios favoring many short charging/discharging cycles as well as fewer longer-duration cycles.

4.3 Molten Salt

The molten salt heat storage system was modeled after hot–cold tank systems used in concentrating solar power plants. The primary differences were the need for a steam–salt heat exchanger, and the use of a much smaller temperature differential between hot and cold tanks. This was necessary because the available steam from a typical light water reactor is only around 280 °C.

The salt Hitec XL ($7{\cdot}NaNO_3-45{\cdot}KNO_3-48{\cdot}Ca(NO_3)_2$) was chosen for this design study. Hitec ($7{\cdot}NaNO_3-53{\cdot}KNO_3-40{\cdot}NaNO_2$), solar salt ($60{\cdot}NaNO_3-40{\cdot}KNO_3$), and Therminol VP-1/Dowtherm-A ($73.5{\cdot}(C_6H_5)_2O-26.5{\cdot}(C_6H_5)_2$) were also considered because they had potentially compatible properties. Ultimately, Hitec XL was the least expensive per unit energy stored. Additionally, solar salt's freezing point was too high (220 °C), while Therminol VP-1 boils at 257 °C, necessitating the use of a pressure vessel.

We used an optimum-sized tank for the molten salt system [11], so larger systems simply used multiple tank sets. Heat loss rates were calculated by simulating the heat loss from the top and sides (but not the bottom) of a full hot tank across a specified storage period, typically 12 hours. The temperature swing in the salt was 180–280 °C.

4.4 Concrete

We modeled a concrete system that stores energy as sensible heat in bulk, high-temperature-compatible concrete. Because typical construction-grade concretes are not suitable for extended use at high temperatures, we adopted

a self-compacting concrete with a low water:cement ratio around 0.4 [12], with an estimated price of around $300/m^3 [13].

Steam from a nuclear reactor would enter a series of steel pipes encased in concrete. The steam transfers its latent heat energy to the concrete as it condenses into liquid water, which is then pumped out of the pipes. Once the concrete midway between adjacent pipes has reached thermal equilibrium with the steam, the system is fully charged, and the steam supply is cut off. To generate power, water is pumped back through the pipe, generating steam by drawing heat from the concrete, essentially running the charging process in reverse. The temperature swing in the concrete was 180–280 °C.

We defined a unit cube of pipe and concrete to facilitate system scaling by integer multiples (Figure 4.3). For example, using 10 as the base integer yields 1,000 cubes in a 10×10×10 cubic stack).

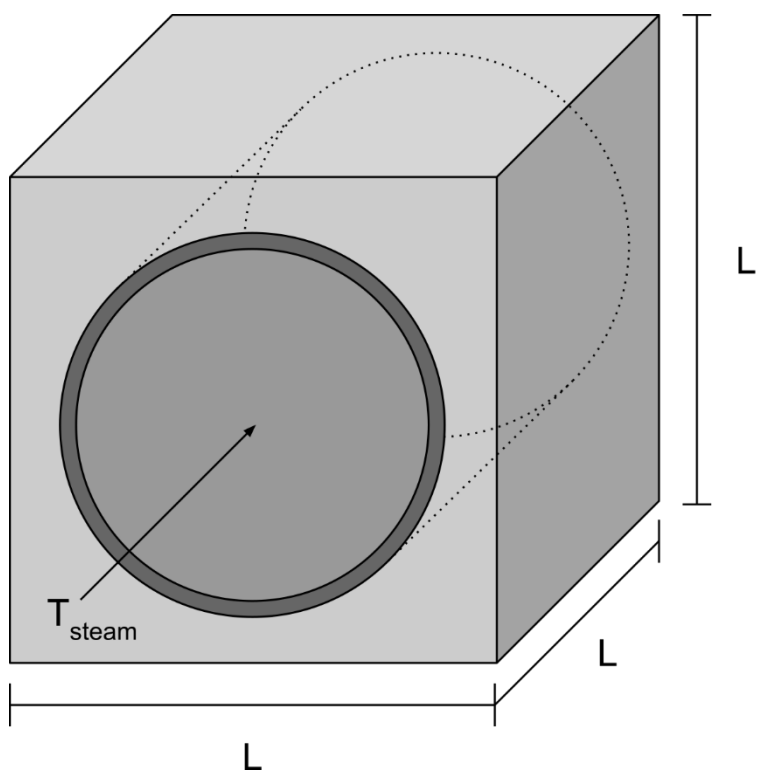

Figure 4.3. Concrete block configuration. T_{steam} is the inlet steam temperature and L is the side length.

4.5 Comparisons

The three heat storage technologies were designed around three operational factors: power output (P, in watts), heat storage time at full power (H, in hours), and heat loss rates (q_{loss}, in %E per hour), shown in Table 4.2. We assumed that the charging power (steam input from reactor) and discharging power (steam generated from the heat storage system) were equal in all cases.

Table 4.2. Configuration variables.

Power, P [MW]	200, 400, 600, 800, 1,000, 1,200, 1,400
Storage Time, H [hrs]	4, 8, 12, 16, 20, 24
Heat Loss Rate, qloss [%/hr]	No insulation, 0.1%, 0.01%

We found that the systems with the lowest cost of stored energy [$/MWh] were the largest: 1,400 MW power, 24-hour storage time. This is due to the cost scaling factors employed.

Uninsulated heat storage systems have the lowest direct capital costs. However, adding as little as 6 cm of insulation in some cases lowered the heat loss rate by an order of magnitude. In all cases, the larger the energy capacity, the less insulation was needed for a given heat loss rate (Figure 4.4). Achieving 0.1%/hr loss rates would add negligible costs to a concrete system, but the costs would be much more significant for steam accumulators and molten salt tanks due to the thermal conductivity of the steel in contact with the insulation.

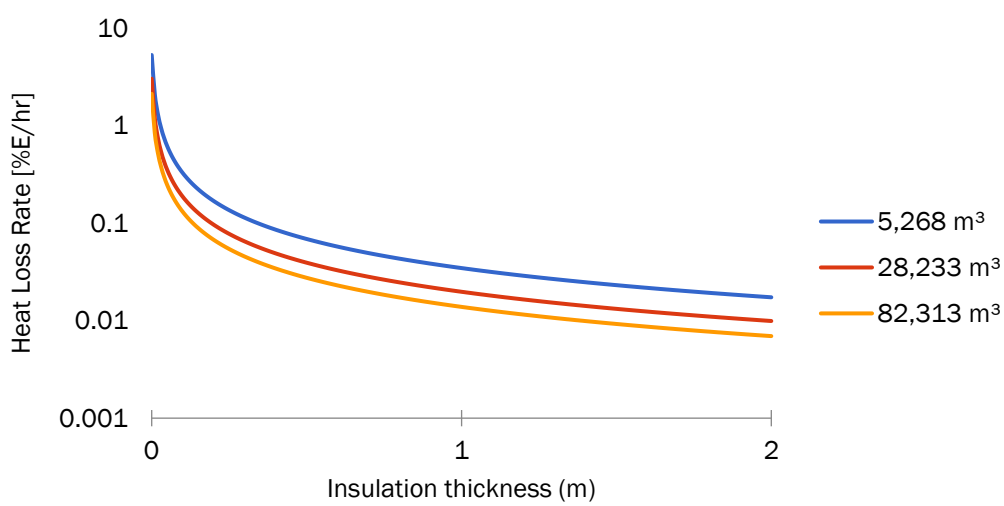

Figure 4.4. Concrete system heat loss rates vs. insulation thickness. Total system volumes were 5,268 m³, 28,233 m³, and 82,313 m³ (concrete and pipes).

5 Heat Storage Construction and Dispatch Modeling Results

Although some energy market simulators like PLEXOS and AURORAxmp can model combined heat and power plants and/or district heating markets, none currently model power-plant-integrated heat storage directly. We approached heat storage coupled to nuclear power plants via proxy archetypes like pumped hydroelectric storage. We prevented the charging of the storage system via grid electricity by placing directional transmission constraints on the lines to and from the pumped hydroelectric heat storage proxy (charging only from the nuclear plant, discharging only to the grid). This approach assumes no losses between the reactor steam and heat storage, and that the heat storage turbogenerator has the same thermodynamic efficiency as the primary turbogenerator (typically 33% for a PWR).

For the capacity change model, we only allowed pumped hydroelectric heat storage proxies to be built at the special one-directional nodes of the nuclear power plants. Although it would be feasible for heat storage systems to be built at other thermoelectric power plants, nuclear power plants have the extremely low operating costs that allow them to be at or near the bottom of merit order bid stacks. In other words, since the average cost of heat for nuclear power plants is lowest, heat storage systems would be most likely to be economically viable when coupled with nuclear power plants. Geothermal power plants share many of the operating characteristics as nuclear power plants, but they were beyond the scope of this work.

In one application, we used the steam accumulator technoeconomic model to estimate the capital costs, fixed O&M costs, and heat losses during storage discharge for sixteen different steam accumulator candidates. These ranged in power from 500–1,000 MW and storage capacity from 5–40 hours. The candidates were then added to the capacity change model in PLEXOS to simulate the construction of steam accumulators for hybrid nuclear–TES systems in the ERCOT grid. It was found that steam accumulators were built in three scenario permutations which featured higher natural gas prices, continued declines in the installed costs of wind and solar PV generators, and a carbon tax (Figure 5.1.) [14].

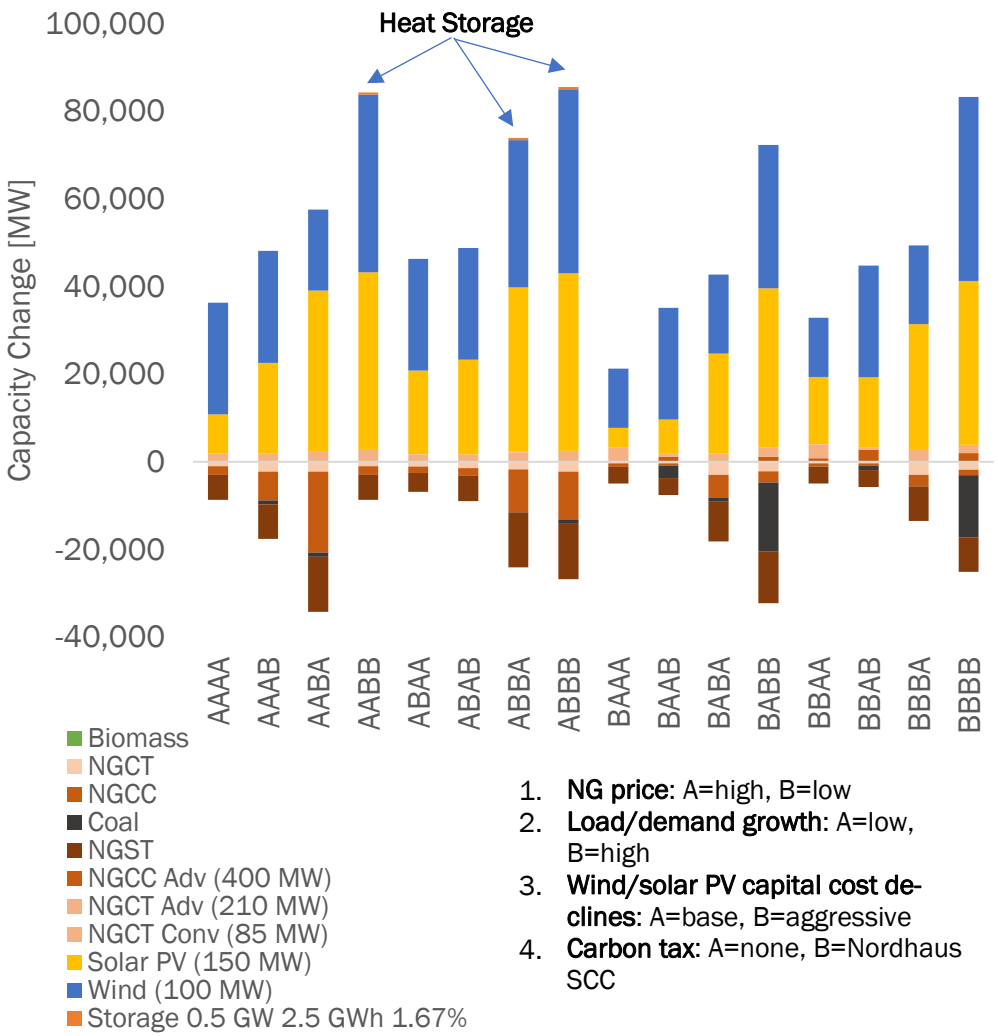

Figure 5.1. Results from long-term capacity change modeling of ERCOT with sixteen different scenario permutations. The first letter corresponds to the natural gas (NG) price, the second letter to the load and demand growth, the third letter to the wind/solar PV capital cost, and the fourth letter to a carbon tax. Reprinted from [14].

6 Nuclear Strategy Recommendations

6.1 Capacity Payments

Although most nuclear power plant revenue in the U.S. today comes from electricity generation, capacity payments may become lucrative if large numbers of fossil power plants retire. Power plant capacity is necessary to ensure medium- to long-term supply of electricity.

Heat storage could provide firm capacity by adding a secondary (combustion) fuel source to run a secondary boiler. This secondary boiler would supply steam to the secondary steam turbine that normally uses steam from the heat storage reservoir. This is necessary because the heat storage reservoir cannot be guaranteed to have enough energy available for peak load. In other words, if the heat storage system is depleted, it cannot supply electricity when peak capacity is needed.

This type of heat storage system would compete against combustion turbines, the main provider of peak capacity today. The cost to add capacity in a nuclear heat storage system could be lower than combustion turbines because only a boiler would be added. This assumes excess primary steam turbine capacity is available or that a secondary steam turbine is already paid for as part of the heat storage system.

6.2 Heat Storage for Direct Heat Sales

Heat storage could enable nuclear reactors to flexibly supply steam to local steam customers or generate electricity. Steam would have three potential destinations: steam customers, heat storage, or electricity generation. The heat storage system would be configured to discharge to steam customers. For example, during off-peak electricity hours, some steam could be diverted from electricity production to the heat storage reservoir. During on-peak electricity hours, the heat storage system would supply steam to the customers, and all of the steam generated by the reactor would generate electricity.

Earlier studies have found that high-availability steam can be supplied with secondary combustion boilers—fueled by natural gas, fuel oil, biofuels, or hydrogen—when the primary reactor is unavailable [15], [16]. Based on Framatome's high temperature reactor design, we concluded that a heat storage system might reduce the cost of providing high-availability steam. This would depend on sizing the heat storage to meet peak demand while secondary boilers are warming up.

6.3 Market Uncertainty and Development Risk

Our market modeling results suggest that heat storage systems coupled to nuclear power plants will only be economically viable under some market conditions. The price of natural gas continues to be the primary driver of electricity price in most markets, and this is likely to continue into the near future as U.S. production continues to rise. If natural gas prices fall further, not only are the economics of heat storage worse, but the nuclear power plants themselves are in greater jeopardy of closing. Conversely, a rise in natural gas prices would support both heat storage and conventional nuclear power economics. The establishment of a carbon tax or a cap-and-trade system could also support nuclear power and heat storage by increasing marginal prices from fossil-fueled generators.

Our results also suggest that larger amounts of wind and solar PV could be beneficial for heat storage economics. This is due to the price volatility that this introduces into electricity markets. However, if very large amounts of zero-marginal-cost generation enter an electricity market, this would tend to reduce the long-term average price of electricity, putting revenues at risk.

There are several promising options for heat storage at nuclear power plants, but those with the lowest development risk are being deployed commercially today at concentrating solar power plants: steam accumulators, two-tank molten salt systems, and high-temperature-compatible concrete. There is some development risk in the integration of plant components, but these are probably similar to those in concentrating solar plants or earlier coal-fired power plants that used heat storage.

Nuclear reactors with heat storage have not been licensed by the Nuclear Regulatory Commission. There is some precedent from the investigations at Ft. Calhoun Nuclear Generating Station on supplying steam to an industrial plant. The assessment was that selling steam to industrial customers would have no significant impact on reactor safety. To reduce this risk, we recommend establishing a formal technical review with the Nuclear Regulatory Commission.

Last, we recommend that public–private partnerships be implemented to demonstrate multiple heat storage technologies at scale at existing nuclear power plants. The utility would choose the specific heat storage technology and manage the project. The total costs would be shared by the utility and the public. This would be akin to the model that was used to demonstrate the first few nuclear power plants in the United States [17]. Only full-scale demonstration

projects can fully address the technical, regulatory and financial questions associated with deployment of such a technology.

7 Conclusions and Future Work

This work identified several technology strategies for nuclear power plants that could help them remain competitive in challenging electricity market conditions. Heat storage technologies would give power plants the flexibility of producing more, high-priced electricity while allowing the reactors to operate at a constant heat output. We examined the historical and near-future market conditions in detail for two regions: Texas (ERCOT) and New England (ISO-NE).

We developed bottom-up technoeconomic models of three different heat storage systems that could be coupled to existing light-water reactors: steam accumulators, two-tank molten salt storage, and high-temperature-compatible concrete. These models estimate the direct, overnight capital costs of heat storage systems for given power output [MW], energy storage capacity [MWh or GJ], and heat loss rate [%/hr]. We used an hourly unit commitment and economic dispatch model to simulate day-ahead market dynamics of combined nuclear–heat storage systems. We also created a long-term capacity change model to simulate the effects of generator retirements and new construction on price dynamics.

Adding a heat storage system to a nuclear power plant could improve net revenue in some cases. We found the greatest improvement in net revenue occurred by increasing the power output, while minimal improvement occurred when increasing the energy capacity beyond 10 hours. Ultimately, market conditions will determine the economic viability of a heat storage system. Market scenarios with high natural gas prices and large amounts of wind and solar PV tended to favor heat storage systems. High load and demand growth, as well as a carbon tax, were also favorable in some scenarios.

Future work should focus on both market effects and engineering design. The effects of electricity and heat market uncertainty should be analyzed in more detail, especially regarding natural gas prices and solar PV and wind construction. Cost uncertainty would be reduced by performing more detailed engineering design on candidate heat storage systems. Finally, there is a need to demonstrate the technologies at scale at existing nuclear reactors. Only real demonstration projects can address all the technical, regulatory, and financial challenges.

8 Project Contributors

8.1 Faculty and Staff

Dr. Cem Bagdatlioglu[1]
Mary Beth Baker[3]
Dr. Charles W. Forsberg[2]
Dr. Christopher van der Hoeven[1]
Prof. Sheldon Landsberger[1]
Prof. Erich A. Schneider[1]
Dr. Farshid Shahrokhi[3]
Prof. Michael E. Webber[1]

8.2 Graduate Students

Daniel J. Curtis[2]
Raymond E. Lane III[1]
W. Neal Mann[1]
Rachel Morneau[1]
Katrina Ramirez-Meyers[1]
Daniel C. Stack[2]

8.3 Undergraduate Students

Seth Bisett[1]
Cade Bourque[1]
Kayla Kelley[1]
Alina LaPotin[1]
Zanil Narsing[1]
Jose R. Parga[1]

[1] Department of Mechanical Engineering, The University of Texas at Austin
[2] Department of Nuclear Science & Engineering, Massachusetts Institute of Technology
[3] Framatome, Inc.

9 Publications

9.1 Journal Articles

Forsberg, Charles W. 2018. "Variable and Assured Peak Electricity Production from Base-Load Light-Water Reactors with Heat Storage and Auxiliary Combustible Fuels." *Nuclear Technology* (November). doi:10.1080/00295450.2018.1518555

Forsberg, Charles W., Stephen Brick, and Geoffrey Haratyk. 2018. "Coupling heat storage to nuclear reactors for variable electricity output with baseload reactor operation." *The Electricity Journal* 31, no. 3 (April): 23–31. doi:10.1016/j.tej.2018.03.008

Forsberg, Charles W., Daniel C. Stack, Daniel Curtis, Geoffrey Haratyk, and Nestor Andres Sepulveda. 2017. "Converting excess low-price electricity into high-temperature stored heat for industry and high-value electricity production." *The Electricity Journal* 30, no. 6 (July): 42–52. doi:10.1016/j.tej.2017.06.009

Forsberg, Charles W., Daniel Curtis, and Daniel C. Stack. 2017. "Light Water Reactors with Crushed Rock Thermal Storage for Industrial Heat and High-Value Electricity." *Nuclear Technology* 198, no. 1 (April): 70–78. doi:10.1080/00295450.2017.1294426

9.2 Conference Proceedings, Peer Reviewed

Mann, W. Neal, Sheldon Landsberger, and Michael E. Webber. 2018. "Enhancing the Economics of Nuclear Power Through Heat Storage." In *Transactions of the American Nuclear Society*. Vol. 119 (November). Orlando, FL.

Forsberg, Charles. 2018. "The Requirement for Variable Electricity from Base-Load Nuclear Power Plants: Role of Heat Storage." In *Transactions of the American Nuclear Society*. Vol. 118 (June). Philadelphia, PA.

Forsberg, Charles, and Robert Varrin. 2018. "Light Water Reactors with Heat Storage and Auxiliary-Combustion Steam Generation to Maximize Electricity and Capacity Payment Revenue," In *Transactions of the American Nuclear Society*. Vol. 118 (June). Philadelphia, PA.

Mann, Neal, and Erich Schneider. 2017. "Hybrid Nuclear Thermal Energy Storage System Revenue with Design and Market Uncertainty." In *Proceedings of the 2017 25th International Conference on Nuclear Engineering*. (July). Shanghai, China.

Bisett, Seth, Alina LaPotin, and Erich Schneider. 2017. “Steam Accumulator Storage Integration into a Nuclear Power Plant.” In *Transactions of the American Nuclear Society.* Vol. 116 (June). San Francisco, CA.

Curtis, Daniel, Natalie Shifflet, and Charles Forsberg. 2017. “Technology Options for Integrated Thermal Energy Storage in Nuclear Power Plants.” In *Transactions of the American Nuclear Society.* Vol. 116 (June). San Francisco, CA.

Forsberg, Charles. 2017. “Development Strategy for Gas Turbines with Firebrick Resistance-Heated Energy Storage to Enable Nuclear-Renewable Grid Integration.” In *Transactions of the American Nuclear Society.* Vol. 116 (June). San Francisco, CA.

Forsberg, Charles. 2017. “Heat Storage for Peak Power with Base-Load Rankine-Cycle LWRs and Brayton-Cycle High Temperature Reactors.” In *Transactions of the American Nuclear Society.* Vol. 116 (June). San Francisco, CA.

Shifflet, Natalie, Daniel Curtis, and Charles Forsberg. 2017. “Diverting Steam from a Nuclear Power Plant to Thermal Storage to Increase Economic Efficiency of Electricity Production.” In *Transactions of the American Nuclear Society.* Vol. 116 (June). San Francisco, CA.

Stack, Daniel C., and Charles Forsberg. 2017. “Using Conductive Firebrick Resistance Heating to Enable Very High-Temperature Heat Storage in Nuclear Gas Turbine Systems.” In *Transactions of the American Nuclear Society.* Vol. 116 (June). San Francisco, CA.

Curtis, Daniel, and Charles Forsberg. 2016. “The Nuclear Role in Electricity Supply: Moving Away from Baseload” In *Transactions of the American Nuclear Society*. Vol. 115 (November). Las Vegas, NV.

Forsberg, Charles. “Base-Load High-Temperature Reactors with Variable Electricity to the Grid using Brayton Cycles to Match Low-Carbon Electricity Markets.” In *Proceedings of the 2016 International Topical Meeting on High Temperature Reactor Technology*. (November). Las Vegas, NV.

LaPotin, Alina, and Erich A. Schneider. 2016. “An Economic Model of a Steam Accumulator Storage System for Nuclear Power Plants.” In *Transactions of the American Nuclear Society*. Vol. 115 (November). Las Vegas, NV.

Mann, W. Neal, and Erich A. Schneider. 2016. “Potential Ancillary Services Revenue for Nuclear Power Plants with Thermal Energy Storage.” In *Transactions of the American Nuclear Society*. Vol. 115 (November). Las Vegas, NV.

Morneau, Rachel, Erich A. Schneider, W. Neal Mann, Charles Forsberg, Jose Parga, and Alina LaPotin. 2016. "Sensitivity Studies of Thermal Energy Storage at Nuclear Plants Using ERCOT Grid." In *Proceedings of the 2016 International Congress on Advances in Nuclear Power Plants*. (April). San Francisco, CA.

Morneau, Rachel, Erich A. Schneider, and Charles Forsberg. 2015. "Benefits of Thermal Energy Storage at Nuclear Plants Using ERCOT as Case Study." In *Transactions of the American Nuclear Society*. Vol. 113 (November). Washington, DC.

9.3 Technical Reports

Mann, W. Neal, Charles Forsberg, Farshid Shahrokhi, Cem Bagdatlioglu, Seth Bisett, Kayla Kelley, Alina LaPotin, Zanil Narsing, Daniel Curtis, Daniel Stack, Mary Beth Baker, Sheldon Landsberger, Erich A. Schneider, and Michael E. Webber. 2018. *Technoeconomic Modeling of Heat Storage with Assured Capacity for Steam-Cycle Nuclear Power Plants*. Report Nos. UTEXAS/ME--2018-04-1, MIT-ANP-TR-173, Framatome 38-9284432-000.

Forsberg, Charles, ed. 2017. *Light Water Reactor Heat Storage for Peak Power and Increased Revenue: Focused Workshop on Near-Term Options.* With John Parsons, Geoffrey Haratyk, Jesse Jenkins, Joseph Wooten, Joe Gasper, Stephen Brick, Robert Varrin, Erich Schneider, Neal Mann, et al. Report No. MIT-ANP-TR-170. Cambridge, MA: Massachusetts Institute of Technology. https://energy.mit.edu/wp-content/uploads/2017/12/Light-Water-Reactor-Heat-Storage-for-Peak-Power-and-Increased-Revenue.pdf

Mann, Neal, Chen-Hao Tsai, Gürcan Gülen, Erich Schneider, Pedro Cuevas, Jim Dyer, John Butler, Tong Zhang, Ross Baldick, Thomas Deetjen, and Rachel Morneau. 2017. *Capacity Expansion and Dispatch Modeling: Model Documentation and Results for ERCOT Scenarios*. Report No. UTEI/2017-4-14. Austin, TX: Energy Institute, The University of Texas at Austin. http://energy.utexas.edu/the-full-cost-of-electricity-fce/

9.4 Theses and Dissertations

Mann, W. Neal. 2017. "Construction of Hybrid Nuclear Thermal Energy Storage Systems under Electricity Market Uncertainty." Master's thesis, The University of Texas at Austin. doi:10.15781/T21J97P43

Lane, Raymond E., III. 2016. "Modeling and integration of steam accumulators in nuclear steam supply systems." Master's thesis, The University of Texas at Austin. doi:10.15781/T2251FQ8F

10 Presentations

10.1 Contributed Presentations and Posters

Bourque, Cade. 2018. "Concrete Model of Thermal Energy Storage System for Nuclear Power Plant." Presented at the Undergraduate Research Symposium, Department of Mechanical Engineering, The University of Texas at Austin, December 2018.

Mann, W. Neal, Katrina Ramirez-Meyers, Seth Bisett, Cem Bagdatlioglu, Sheldon Landsberger, and Michael E. Webber. 2018. "Optimizing a Hybrid Nuclear–Heat Storage Power Plant with Market Uncertainty." Poster at the ASME 2018 Power & Energy Conference, Lake Buena Vista, FL, June 24–28, 2018.

Bisett, Seth. 2017. "Coupled Thermodynamic and Economic Modelling of Thermal Energy Storage Systems for Nuclear Power Plants." Presented at the Undergraduate Research Symposium, Department of Mechanical Engineering, The University of Texas at Austin, May 2018.

Kelley, Kayla. 2017. "Economic and Thermodynamic Modeling of a Molten Salt Thermal Energy Storage System at a Nuclear Power Plant." Presented at the Undergraduate Research Symposium, Department of Mechanical Engineering, The University of Texas at Austin, December 2017.

LaPotin, Alina, and Erich Schneider. 2016. "Steam Accumulator Storage for Nuclear Power Plants." Presented at the Undergraduate Research Symposium, Department of Mechanical Engineering, The University of Texas at Austin, May 2016.

Morneau, Rachel, Neal Mann, Jose Parga, and Alina LaPotin. "Sensitivity Studies of Thermal Energy Storage at Nuclear Power Plants Using ERCOT Grid." Presented at the 2016 American Nuclear Society Student Conference, Madison, WI, April 2, 2016.

10.2 Invited Presentations and Seminars

Curtis, Daniel. 2017. "Electricity Market Characteristics vs. Choice of Thermal Storage Technology." Presented at Light Water Reactor Heat Storage for Peak Power and Increased Revenue: Focused Workshop on Near-Term Options, Massachusetts Institute of Technology, Cambridge, MA, June 27–28, 2017. https://energy.mit.edu/wp-content/uploads/2017/12/Light-Water-Reactor-Heat-Storage-for-Peak-Power-and-Increased-Revenue.pdf

Forsberg, Charles W. 2017. "Firebrick Resistance Heated Energy Storage: the Other Thermal Storage Option." Presented at Light Water Reactor Heat Storage for Peak Power and Increased Revenue: Focused Workshop on Near-Term Options, Massachusetts Institute of Technology, Cambridge, MA, June 27–28, 2017. https://energy.mit.edu/wp-content/uploads/2017/12/Light-Water-Reactor-Heat-Storage-for-Peak-Power-and-Increased-Revenue.pdf

Forsberg, Charles W., and Tom Buscheck. 2017. "Nuclear–Geothermal Heat Storage." Presented at Light Water Reactor Heat Storage for Peak Power and Increased Revenue: Focused Workshop on Near-Term Options, Massachusetts Institute of Technology, Cambridge, MA, June 27–28, 2017. https://energy.mit.edu/wp-content/uploads/2017/12/Light-Water-Reactor-Heat-Storage-for-Peak-Power-and-Increased-Revenue.pdf

Mann, W. Neal. 2017. "Steam Accumulators for Thermal Energy Storage at Nuclear Power Plants." Presented at Light Water Reactor Heat Storage for Peak Power and Increased Revenue: Focused Workshop on Near-Term Options, Massachusetts Institute of Technology, Cambridge, MA, June 27–28, 2017. https://energy.mit.edu/wp-content/uploads/2017/12/Light-Water-Reactor-Heat-Storage-for-Peak-Power-and-Increased-Revenue.pdf

Schneider, Erich A, Gürcan Gülen, Chen-Hao Tsai, and Christopher van der Hoeven. 2015. "AURORA–PLEXOS Comparison of 2011 ERCOT Scenarios." Presented at the Energy Institute, The University of Texas at Austin, August 27, 2015.

References

[1] W. N. Mann and E. A. Schneider, "Potential Ancillary Services Revenue for Nuclear Power Plants with Thermal Energy Storage," in *Transactions of the American Nuclear Society, vol. 115*, Las Vegas, NV, November 6-10, 2016.

[2] Energy Exemplar LLC, "PLEXOS," [Online]. Available: http://energyexemplar.com/.

[3] Epis, Inc., "AuroraXMP," [Online]. Available: http://epis.com/.

[4] W. Cole, W. Frazier, P. Donohoo-Vallett, T. Mai and P. Das, "2018 Standard Scenarios Report: A U.S. Electricity Sector Outlook," National Renewable Energy Laboratory, Golden, CO, 2018.

[5] A. Akhil, G. Huff, A. Currier, B. Kaun, D. Rastler, S. Chen, A. Cotter, D. Bradshaw and W. Gauntlett, "DOE/EPRI Electricity Storage Handbook in Collaboration with NRECA," Sandia National Laboratories, Albuquerque, 2015.

[6] J. Eyer and G. Corey, "Energy Storage for the Electricity Grid: Benefits and Market Potential Assessment Guide," Sandia National Laboratories, Albuquerque, 2010.

[7] International Energy Agency, "Technology Roadmap: Energy Storage," International Energy Agency, Paris, 2014.

[8] X. Luo, J. Wang, M. Dooner and J. Clarke, "Overview of current development in electrical energy storage technologies and the application potential in power system operation," *Applied Energy,* vol. 137, no. 1 January 2015, pp. 511-536, 2015.

[9] X. Luo, J. Wang, M. Dooner and J. Clarke, "Overview of current development in electrical energy storage technologies and the application potential in power system operation," *Applied Energy,* vol. 137, no. 1, pp. 511-536, January 2015.

[10] C. Forsberg, "Light Water Reactor Heat Storage for Peak Power and Increased Revenue: Focused Workshop on Near-Term Options," MIT Center for Advanced Nuclear Energy Systems, Cambridge, MA, 2017.

[11] R. Gabbrielli and C. Zamparelli, "Optimal Design of a Molten Salt Thermal Storage Tank for Parabolic Trough Solar Power Plants," *Journal of Solar Energy Engineering,* vol. 131, no. 4, pp. 041001-1-041001-10, 2009.

[12] W. Khaliq and V. Kodur, "Thermal and mechanical properties of fiber reinforced high performance self-consolidating concrete at elevated temperatures," *Cement and Concrete Research,* vol. 41, no. 11, pp. 1112-1122, 2011.

[13] E. John, M. Hale and P. Selvam, "Concrete as a thermal energy storage medium for thermocline solar energy storage systems," *Solar Energy,* vol. 96, pp. 194-204, 2013.

[14] W. N. Mann, Construction of hybrid nuclear thermal energy storage systems under electricity market uncertainty, Austin, TX: Department of Mechanical Engineering, The University of Texas at Austin, 2017.

[15] E. M. Herd and L. J. Lommers, "HTGR Strategies to Meet Process Heat Reliability and Availability Needs," in *International Congress on Advances in Nuclear Power Plants (ICAPP'10)*, San Diego, 2010.

[16] E. Herd, L. Lommers and F. Southworth, "Impact of Demand Load Size on Strategies for Reliable Process Heat Supply," *Nuclear Engineering and Design,* vol. 251, pp. 282-91, 2012.

[17] C. W. Forsberg, "Commentary: Nuclear Energy for Economic Variable Electricity: Replacing the Role of Fossil Fuels," *Nuclear Technology,* 2018.

Acronyms and Abbreviations

CC	Combined cycle combustion turbine/steam turbine
CFE	Comisión Federal de Electricidad, Mexico's state-owned electric utility
CHP	Combined heat and power
CT	Open-cycle combustion turbine
EIA	Energy Information Administration
ERCOT	Electricity Reliability Council of Texas
GJ	Gigajoule, one billion jourles
IGCC	Integrated gasification combined cycle
IRENA	International Renewable Energy Agency
ISO	Independent system operator, a type of wholesale electricity market operator
ISO-NE	ISO New England
LTSA	Long Term System Assessment, ERCOT's long-range planning analysis
LWR	Light water reactor
MISO	Midcontinent Independent System Operator
MW	Megawatt, one million watts
MWh	Megawatt-hour, one million watt–hours; equivalent to 3.6 billion joules
NG	Natural gas
O&M	Operations and maintenance
ORDC	Operating Reserve Demand Curve, a reserve price escalator in ERCOT
PV	Solar photovoltaic
PWR	Pressurized water reactor
SPP	Southwest Power Pool
ST	Steam turbine
TES	Thermal energy storage
WECC	Western Electricity Coordinating Council