TITLE PAGE

Report Title:	Pilot Test of Novel Electrochemical Membrane System for Carbon Dioxide Capture and Power Generation
Type of Report:	Final Technical Report
Reporting Period Start Date:	October 1, 2015
Reporting Period End Date:	August 31, 2018
Principal Author:	Hossein Ghezel-Ayagh
Date Report Issued:	November 30, 2018
DOE Award No.:	DE-FE0026580
Name & Address of Submitter:	FuelCell Energy, Inc. 3 Great Pasture Road Danbury, CT 06810
Subcontractors:	AECOM Corporation 9400 Amberglen Boulevard Austin, TX 78729 Southern Company Services, Inc. 600 North 18th Street Birmingham, Alabama 35203

DISCLAIMER

"This report was prepared as an account of work sponsored by an agency of the United States Government. Neither the United States Government nor any agency thereof, nor any of their employees, makes any warranty, express or implied, or assumes any legal liability or responsibility for the accuracy, completeness, or usefulness of any information, apparatus, product, or process disclosed, or represents that its use would not infringe privately owned rights. Reference herein to any specific commercial product, process, or service by trade name, trademark, manufacturer, or otherwise does not necessarily constitute or imply its endorsement, recommendation, or favoring by the United States Government or any agency thereof. The views and opinions of authors expressed herein do not necessarily state or reflect those of the United States Government or any agency thereof."

ABSTRACT

The goal of this U.S. Department of Energy (DOE) sponsored project under cooperative agreement DE-FE0026580 is to verify that Fuel Cell Energy's (FCE) Electrochemical Membrane (ECM)-based Combined Electric Power and Carbon Separation (CEPACS) system can achieve at least 90% carbon dioxide (CO_2) capture rate from Pulverized Coal (PC) power plant flue gas with 95% CO_2 purity at a cost of electricity (COE) 30% less than baseline CO_2 capture approaches. To progress towards the DOE's ultimate carbon capture program goals, the specific objectives of Budget Period 1 (BP1) of the project are to perform a preliminary Techno-Economic Analysis (TEA) and Environmental, Health and Safety (EH&S) Risk Assessment study, as well as to complete the detailed design of a pilot-scale ECM-based CEPACS system.

This final technical report summarizes the results of the preliminary TEA and EH&S assessment of an ECM-based CEPACS system designed to capture and compress >90% of CO_2 from the flue gas of a reference 550 MW (net AC) Pulverized Coal (PC) Supercritical Steam Cycle Plant. Also included in this report is a summary of the detailed design for a pilot 3 MW_e (flue gas equivalent) ECM-based CEPACS system designed to capture ≥90% of CO_2 from a PC plant flue gas slipstream and produce high-purity (≥95%) CO_2. The pilot system is designed to process a slipstream of flue gas from the Unit 5 coal-fired boiler at the James M. Barry Electric Generating Station (Plant Barry). Plant Barry is located in Bucks, Alabama and is owned and operated by Alabama Power Company, a subsidiary of Southern Company.

The TEA shows that the ECM-based CO_2 capture technology has an economic advantage over the existing CO_2 capture technology and meets the DOE's cost target and performance goals for post-combustion CO_2 capture.

The EH&S study includes the identification and quantification of the emissions from the CEPACS system. Properties of the waste including reactivity, flammability, corrosivity and toxicological effects are discussed along with the methods for minimization/elimination where applicable. The study shows that no major EH&S issues are expected to hinder commercialization of the ECM technology for large scale carbon capture applications.

The detailed Front End Engineering Design (FEED) package for FCE's MW-class ECM-based CO_2 capture pilot system is complete. It is designed in accordance with the project objectives and is now at a point where equipment/component procurement, skid final design and fabrication, and site preparation activities can begin in a follow-on project phase.

TABLE OF CONTENTS

ABSTRACT III
LIST OF FIGURES VI
LIST OF TABLES VIII
EXECUTIVE SUMMARY 1
INTRODUCTION AND OBJECTIVES 22
RESULTS AND DISCUSSIONS 24
1.0 TASK 2.0 – PRELIMINARY TECHNO-ECONOMIC ANALYSIS AND EH&S ASSESSMENT 24
1.1 Preliminary Techno-Economic Analysis 24
1.1.1 Design Basis 24
1.1.2 Overall Process 28
1.1.3 Major Subsystems 30
1.1.3.1 Flue Gas Processing Sub-System 30
1.1.3.2 ECM Stacks (for CO_2 Separation) 31
1.1.3.3 CO2 Product Post-processing 39
1.1.3.4 Supplemental Fuel Processing Sub-system 40
1.1.3.5 Water Sub-systems 40
1.1.3.6 Electrical Sub-systems 41
1.1.4 Equipment List 44
1.1.5 System Performance 47
1.1.5.1 Key System Assumptions 47
1.1.5.2 Performance Summary 49
1.1.5.3 Environmental Performance 50
1.1.5.4 Carbon Balance 51
1.1.5.5 Sulfur Balance 52
1.1.5.6 Energy Balance 52
1.1.5.7 Water Balance 54
1.1.6 CEPACS Plant Economic Analysis 56
1.1.6.1 Case 3 Capital Cost Estimate 56
1.1.6.2 Case 3 Cost of Electricity and Cost of CO2 Capture Analysis 66
1.1.6.3 Sensitivity Analysis 67
1.2 Environmental Health and Safety Assessment 71
1.2.1 Process Emissions Review 71
1.2.1.1 Gaseous or Air Emissions 71
1.2.1.2 Liquid (or Water) and Solid Emissions (including FGD Unit Related) 74
1.2.2 Ancillary Emissions and Solid Wastes (from Consumables) 77
1.2.2.1 Sulfur Sorbent Media 78
1.2.2.2 Water Treatment System Discharge and Solid Waste 78
1.2.2.3 Low Temperature Shift Converter Catalyst 80
1.2.2.4 ECM Stacks 81
1.2.3 Incidental Emissions/Releases 82
1.2.3.1 Ammonia or Other Refrigerants 82
1.2.3.2 Lime, Gypsum 83
1.2.3.3 Carbon Dioxide 83
2.0 TASK 3.0 – PILOT-SCALE ECM-BASED CEPACS SYSTEMS DESIGN 84
2.1 Process Engineering 84
2.1.1 Design Basis 84
2.1.2 Process Description 88
2.1.3 Heat and Material Balances (H&MBs) 89
2.1.4 Piping and Instrumentation Diagrams (P&IDs) 94
2.1.5 Piping Design 96
2.1.6 Instrument Specifications and Selection 101

2.1.7 Hazard and Operability Analysis (HAZOP) 108
2.2 Pilot Plant Equipment 110
2.2.1 Introduction 110
2.2.2 Equipment List 111
2.2.3 Flue Gas Treatment System 113
2.2.4 Natural Gas Desulfurization System 116
2.2.5 Blowers 117
2.2.6 Flue Gas Heat Exchangers 118
2.2.7 Burner/Catalytic Oxidizer 120
2.2.8 ECM Modules 122
2.2.9 Anode Gas Cooling and Fuel Humidification System 123
2.2.10 Anode Gas Compressor 129
2.2.11 CO2 Purification 131
2.2.12 Process Cooling System 136
2.3 Mechanical Engineering 139
2.3.1 Introduction 139
2.3.2 General Arrangement 139
2.3.3 Custom Process Modules 141
2.4 Electrical Engineering 147
2.4.1 Introduction 147
2.4.2 Electrical Configuration 148
2.4.3 Area Classification Analysis 155
2.4.4 Plant Control Hardware Summary 156
2.5 Engineering for Tie-Ins to Plant Barry 156
2.5.1 Introduction 156
2.5.2 Air and Water Permitting Requirements 158
2.5.3 Process Interconnections 163
2.5.4 Electrical and Instrumentation Interconnections 163
2.5.5 Site Layout and Foundations 167
CONCLUSIONS 170
REFERENCES 173
LIST OF ACRONYMS 174
APPENDIX A – PIPING LINE LIST EXCERPT 177
APPENDIX B – INSTRUMENT LIST EXCERPT 179

LIST OF FIGURES

Figure ES-1. Plant Electrical Efficiency (HHV) 5
Figure ES-2. Water Use 6
Figure ES-3. Plant Capital Costs 7
Figure ES-4. Cost of Electricity and Incremental COE 8
Figure ES-5. Cost of CO_2 Captured 9
Figure ES-6. SO_2, NOx, and Particulate Emission Rates 10
Figure ES-7. Mercury Emission Rates 11
Figure ES-8. CO_2 Emission Rates 12
Figure ES-9. Overall Plant Arrangement – ISO View 17
Figure ES-10. Pilot Plant Site Location at Plant Barry with Interconnection Locations 20
Figure 1-1: Capital Cost Levels and Their Elements [3] 27
Figure 1-2: Block Flow Diagram of CEPACS System Applied to a 550 MW Pulverized Coal Plant 29
Figure 1-3. Plan View of a 208-Stack ECM Enclosure 32
Figure 1-4. Cross-section of an ECM enclosure with stack being installed and power equipment external to the enclosure 32
Figure 1-5. General Arrangement of an ECM enclosure and associated “hot” BOP equipment 33
Figure 1-6. General Arrangement of ECM enclosures, BOP equipment and piping 34
Figure 1-7. Direct FuelCell® commercial power plant products 35
Figure 1-8. (left) 14.9 MW Bridgeport, CT facility; and (right) 59 MW Hwasung City, South Korea facility 35
Figure 1-9. Cell Design and Materials 36
Figure 1-10. Product Cost Reduction of DFC Power Plants at Low/Moderate Production Volume 36
Figure 1-11. Global Manufacturing Facilities with an Ultimate Annual Production Capacity of 320 MW 37
Figure 1-12. ECM Performance Based on Bench-scale Testing 39
Figure 1-13. Electrical One-line Diagram for Power Generation Subsystem (CEPACS) 42
Figure 1-14. Electrical One-line Diagram for Auxiliary Power Subsystem (CEPACS) 43
Figure 1-15. Water Block Flow Diagram for the CEPACS System 55
Figure 1-16. Case 3 COE Sensitivity to Natural Gas Transmission Pipeline Distance from CEPACS-equipped PC Plant 68
Figure 1-17. Case 3 COE Sensitivity to Natural Gas Fuel Price 69
Figure 1-18 . Case 3 Costs of CO_2 Captured and CO_2 Avoided - Sensitivity to Natural Gas Fuel Price 70
Figure 1-19. CO_2 Emission Rates 72
Figure 1-20. SO_2, NOx, and Particulate Emission Rates 73
Figure 1-21. Mercury Emission Rates 74
Figure 1-22. Water Block Flow Diagram for CEPACS System 75

Figure 2-1. CEPACS System Process Schematic 88
Figure 2-2. Screenshot of VBA User Form for Controlling Carbon Capture Simulations using CHEMCAD 89
Figure 2-3. 70% Carbon Capture (104˚F Ambient) Water Balance 94
Figure 2-4. Pipe-Flow Model of 70% Carbon Capture Operation at 104°F ambient conditions (Air/Flue Gas System) 97
Figure 2-5. Pipe-Flow Model of 70% Carbon Capture Operation at 104°F ambient conditions (Fuel & Anode Gas System) 98
Figure 2-6. Pipe-Flow Model of 70% Carbon Capture Operation at 104°F ambient conditions (CO_2 & Anode System) 99
Figure 2-7. Pipe Diameter Optimization Results 100
Figure 2-8. Oxygen Sensor Measurements 107
Figure 2-9. PHA Works screen shot detailing work flow of HAZOP process 110
Figure 2-10. Example Photograph of a Similar Caustic Scrubber Tower 114
Figure 2-11. Illustration of a Fabric Filter 115
Figure 2-12. Illustration of a Mist Eliminator 116
Figure 2-13. 3-D Model of Desulfurizer Vessel (Equipment Tag # 200-RR-201A/B) 117
Figure 2-14. SureSource 3000 Fresh Air Blower 118
Figure 2-15. 3D Model of Flue Gas Heater *(left)*; and Flue Gas Preheater *(right)* 119
Figure 2-16. SureSource Power Plant existing burner/air heater 120
Figure 2-17. Burner/Catalytic Oxidizer Preliminary CFD Results 121
Figure 2-18. Cell Design and Materials 122
Figure 2-19. ECM Module Production Process 122
Figure 2-20. Simplified Process Diagram of Anode Gas Cooling and Fuel Humidification System 123
Figure 2-21. 3-D Model with Orientations for Anode Exhaust Cooler 125
Figure 2-22. LTS Vessel CFD Simulation Results 125
Figure 2-23. Schematic Overview of Saturator *(left)* and DCCT *(right)* Packed Towers 127
Figure 2-24. Column Packing *(left)* and Liquid Distributor *(right)* used in the DCCT and Saturator 128
Figure 2-25. DCCT Water Cooler Preliminary Arrangement Drawing 128
Figure 2-26. Fuel Humidifier *(left)* and Model of Preconverter *(right)* 129
Figure 2-27. 3-Stage Reciprocating Compressor 130
Figure 2-28. Integrated Anode Gas Compression Skid, Typical 131
Figure 2-29. Simplified Process Diagram of CO_2 Purification System 132
Figure 2-30. Tube-Coil Specifications 133
Figure 2-31. Absorption Chiller 135
Figure 2-32. Closed Circuit Fluid Cooler Information Sheet 138
Figure 2-33. Water-Cooled Mechanical Chiller 138
Figure 2-34. Overall plant arrangement – ISO view 140
Figure 2-35. Overall plant arrangement – plan view with key equipment labeled 141
Figure 2-36. Skid 2 Modular Design 143

Figure 2-37. Anode Gas Cooling Skid Overview 144
Figure 2-38. Anode Exhaust Blower Arrangement 145
Figure 2-39. Skid 8 – Coolant Pumping Skid.....146
Figure 2-40. FCE SureSource 3000 Electrical One-Line Diagram.....147
Figure 2-41. Pilot Plant Main Power Distribution One-Line Diagram.....148
Figure 2-42. Pilot Plant PCU Electrical Configuration.....150
Figure 2-43. Pilot Plant 13.8kV to 4160V and 480V Feeder Distribution Configuration.....151
Figure 2-44. Wiring Configuration for 4160V, 480V Load Distribution Transformers and Switchgears.....152
Figure 2-45. Pilot Plant Power Distribution Topology.....153
Figure 2-46. Power Electronics Protective Relay Scheme to Utility Connections.....154
Figure 2-47. Hazardous Area Classification Boundaries 155
Figure 2-48. Water Balance for SureSource Capture Pilot Plant (70% Carbon Capture, 104˚F Ambient).....162
Figure 2-49. Pilot Plant to Plant Barry 13.8 kVA Tie-In Point One-Line Diagram 165
Figure 2-50. High Speed Data Connection Options for Pilot Plant at Plant Barry 166
Figure 2-51. Pilot Plant Site Location and Interconnections.....168
Figure 2-52. Skid Location Control Drawing 169

LIST OF TABLES

Table ES-1. System Case Summary..... 2
Table ES-2. Cost and Performance Summary for All Cases..... 4
Table ES-3. Summary of CEPACS Modes of Operation 14
Table ES-4. SureSource Capture System Performance Summary.....15
Table ES-5. Interconnection Characteristics 19
Table ES-6. Pilot Plant Process and Electrical Tie-In Points Summary 19
Table 1-1. PC Plant Flue Gas Specifications.....25
Table 1-2. Pipeline Natural Gas Specification 26
Table 1-3. CO_2 Capture Requirement and Product Specification 26
Table 1-4. Economic Analysis Assumptions.....27
Table 1-5. Expected System (Flue gas) Contaminant Levels Compared with Test Experience .38
Table 1-6. CEPACS System Equipment List for Application to a 550 MW PC Power Plant.....45
Table 1-7. Key System Assumptions.....47
Table 1-8. PC Plant with CEPACS CO_2 Capture System: Performance Summary.....49
Table 1-9. Air Emissions for Case 3: 550 MW PC Plant with CEPACS System.....51
Table 1-10. Carbon Balance for CEPACS System 51
Table 1-11. Sulfur Balance for CEPACS Plant 52
Table 1-12. Overall Energy Balance for CEPACS System (25°C Reference).....53
Table 1-13. Water Balance for 550 MW PC Plant Equipped with CEPACS Plant.....54

Table 1-14. Capital Cost Estimate for CEPACS System, 2014 USD 58
Table 1-15. Case 3 (PC + CEPACS) Capital Cost Estimate, 2011 USD.....62
Table 1-16. Fixed Operating Costs for CEPACS System 66
Table 1-17. Variable Operating Costs for CEPACS System.....66
Table 1-18. Case 3 (PC Case 11 + CEPACS) COE and Cost of CO_2 Captured,.....67
Table 1-19. Air Emissions for 550 MW PC Plant Equipped with CEPACS System.....71
Table 1-20. Water Balance for 550 MW PC Plant Equipped with CEPACS Plant.....76
Table 1-21. Chemicals Used in Boiler Water and Cooling Water Treatments.....79
Table 1-22. Chemicals Used for Microorganism Growth Control.....80
Table 1-23. Material Related Composition of ECM Stack.....81
Table 1-24. Material Composition of Trial Melt of Used ECM Stack 81
Table 1-25. Material Related Management of Used ECM Stack.....82
Table 2-1. Flue Gas Basis.....85
Table 2-2. Natural Gas Basis 86
Table 2-3. CO_2 Capture Requirement and Product Specification 86
Table 2-4. Summary of CEPACS Modes of Operation 90
Table 2-5. SureSource Capture System Performance Summary 91
Table 2-6. List of CEPACS Simulation Cases 92
Table 2-7. Pilot Carbon Capture System P&ID Summary.....95
Table 2-8. Instrument List Summary 102
Table 2-9. Summary of results from PNNL button-cell tests [Marina, 2014].....103
Table 2-10. Analyzer Comparison.....106
Table 2-11. List of Typical Safeguards and Associated Likelihood Levels.....109
Table 2-12. Risk Matrix Used for HAZOP Analysis.....109
Table 2-13. Pilot Plant Equipment Identification List.....111
Table 2-14. Caustic Scrubber Performance Requirements 114
Table 2-15. Caustic Scrubber Specifications.....114
Table 2-16. Fabric Filter Performance Requirements.....115
Table 2-17. Fabric Filter Specifications 115
Table 2-18. Mist Eliminator Performance Requirements 116
Table 2-19. Mist Eliminator Specifications.....116
Table 2-20. Pilot Plant Blower Specification Summary.....118
Table 2-21. Flue Gas Heat Exchangers Specifications Summary 119
Table 2-22. Anode-Side Heat Exchanger Specifications (70% CC).....124
Table 2-23. CO_2 Compression Performance Requirements.....130
Table 2-24. Selected CO_2 Compressor Specifications 130
Table 2-25. Gas Dryer Performance Requirements 134
Table 2-26. Gas Dryer Specifications.....134
Table 2-27. Absorption Chiller Specifications 135
Table 2-28. Closed Circuit Fluid Cooler Process Requirements Summary.....136
Table 2-29. Closed Circuit Fluid Cooler Specifications.....137

Table 2-30. Mechanical Chiller Performance Requirements Summary.....137
Table 2-31. Mechanical Chiller Specification Details 137
Table 2-32. List of Process Skids.....142
Table 2-33. Pilot Plant Normal Operating Power Parameters.....149
Table 2-34. Protective Relay Functions.....154
Table 2-35. Hazardous Area Classifications.....155
Table 2-36. Interconnection Characteristics 157
Table 2-37. Tie-In Point Engineering Package 158
Table 2-38. Plant Exhaust Conditions at Various Operating Modes 160
Table 2-39. Exhaust Stack Emissions.....161
Table 2-40. Liquid Discharge Summary 163
Table 2-41. Pilot Plant Process Tie-In Points 163
Table 2-42. Pilot Plant Control and Communication Schedule with Plant Barry.....167

EXECUTIVE SUMMARY

This final technical report presents the results of the work completed in Budget Period 1 (BP1) under the U.S. Department of Energy (DOE) cooperative agreement DE-FE0026580. This includes a preliminary Techno-Economic Analysis (TEA) to assess the performance and cost of FuelCell Energy's (FCE) Electrochemical Membrane (ECM)-based CO_2 capture system when applied to a world-scale coal power plant, as well as an Environmental Health and Safety (EH&S) Assessment under Task 2.0. This report also presents a summary of the detailed Front End Engineering Design (FEED) package for FCE's MW-class ECM-based CO_2 capture pilot system under Task 3.0. The pilot system is designed to process a slipstream of flue gas from the Unit 5 coal-fired boiler at the James M. Barry Electric Generating Station (Plant Barry). Plant Barry is located in Bucks, Alabama and is owned and operated by Alabama Power Company, a subsidiary of Southern Company.

Executive Summary Part 1 – Techno-Economic Analysis and Environmental Health and Safety Assessment

The Combined Electric Power (generation) And Carbon dioxide Separation (CEPACS) system analyzed is based on ECM technology derived from FCE's well-established carbonate SureSource™ products. A CEPACS plant utilizing ECM technology was designed to capture and compress >90% of CO_2 from the flue gas of a reference 550 MW (net AC) Pulverized Coal (PC) Supercritical Steam Cycle Plant. The PC plant design specified in "Case 11" of the U.S. Department of Energy - National Energy Technology Laboratory (DOE - NETL) report "Cost and Performance Baseline for Fossil Energy Plants, Volume 1: Bituminous Coal and Natural Gas to Electricity, "Revision 2a" [5] was used as a reference.

The system configuration, simulations and analyses were performed using CHEMCAD process simulation software to guide the conceptual design of the CEPACS plant. Process simulations were based on ECM performance realized in bench-scale testing (conducted under the previous DOE project DE-FE0007634). In the CEPACS plant, the ECM-separated CO_2-rich stream is cooled, compressed and chilled to liquefy CO_2 which can be easily pressurized for sequestration or beneficial use. Technical information provided by leading balance-of-plant (BOP) equipment manufacturers was utilized for system analyses. The performance assessment included estimation of the parasitic power consumption for >90% CO_2 capture and compression, and the efficiency impact on the PC plant. The CEPACS plant contains a total of 1664 ECM stacks. An equipment list, ECM stacks packaging design, and CEPACS plant layout were developed to facilitate the economic analysis. Technical and cost quotations were solicited from leading vendors for key pieces of equipment. In addition to the process flow diagram and a stream table, electrical one-line diagrams were generated for the CEPACS plant. The economic analysis included estimation of CEPACS plant capital cost, cost of electricity (COE) analysis and estimation of cost per ton of CO_2 captured and cost per ton of CO_2 avoided. The following two DOE-NETL documents were used as guidelines for the study/analysis:

- 'Scope and Reporting Requirements for NETL System Studies', dated May 2010 [4]
- 'Quality Guidelines for Energy System Studies: Cost Estimation Methodology for NETL Assessment of Power Plant Performance', dated April 2011, DOE/NETL-2011/1455 [3]

The study was conducted in accordance with the DOE–NETL reports mentioned above, and specifically focused on developing technical and economic comparisons to Cases 11 and 12 related to Supercritical PC plant. The cost estimates are based on year 2011 dollars. The cost

numbers for Cases 11 and 12 used for comparison were taken from the DOE-NETL Report "Updated Costs (June 2011 Basis) for Selected Bituminous Coal Cases [6].

The ECM-based CEPACS system applied to the 550 MW PC plant simultaneously generates additional (net AC) power (after compensating for the auxiliary power requirements of CO_2 capture and compression) while capturing >90% of CO_2 from the flue gas. The net electrical efficiency of the PC plant equipped with the CEPACS system (for CO2 capture) was estimated to be 40.7% (based on higher heating values of coal and natural gas fuels used by PC plant and CEPACS plant, respectively). Table ES-1 summarizes the system cases.

Table ES-1. System Case Summary

Case ID	DOE/NETL-2010/1397 Case ID	Unit Cycle	MW gross	MW net	Boiler Technology	Sulfur Removal/ Recovery	CO_2 Separation
1	11	PC	580	550	Supercritical PC	Wet Flue Gas Desulfurization (FGD)	--
2	12	PC + Amine	663	550	Supercritical PC	Wet FGD	Amine Absorber
3	--	PC+ CEPACS	977	869	Supercritical PC	Wet FGD	ECM based CEPACS

The CEPACS system emissions include gaseous emissions during normal operation, such as CO_2, SO_X, NO_X, particulate matter (PM) and Hg. The major liquid discharge is boiler and cooling water blowdown. The chemicals used in the treatment of boiler water and cooling water were considered along with EH&S related information. Ancillary emissions from the CEPACS system include periodic discharges and solid wastes such as sorbents and catalysts. Incidental emissions include refrigerants used in chillers and lime used in the polishing FGD (Flue Gas Desulfurization step). The chillers in the CEPACS system use ammonia as the refrigerant. Overall, no major emission concerns are expected from the CEPACS plant.

Table ES-2 shows the cost, performance, and environmental profile summary for all cases; the CEPACS-equipped PC plant is designated as Case 3. The table provides a comparison with the base PC plant (Case 1) and competing amine-based carbon capture technology (Case 2). The results are discussed below in the following order:

- Performance (efficiency and raw water consumption)
- Cost (plant capital costs, COE, and cost per ton of CO_2 captured)
- Environmental profile (CO_2 and other emissions)

Table ES-2. Cost and Performance Summary for All Cases

	Case 1 PC w/o CO_2 capture	Case 2 PC w/ CO_2 capture (Amine)	Case 3 PC + CEPACS CO_2 capture
PERFORMANCE			
CO_2 Capture	0%	90%	92.6%
Gross Power Output (kWe)	580,400	662,800	976,880
Auxiliary Power Requirement (kWe)	30,410	112,830	107,702
Net Power Output (kWe)	549,990	549,970	869,178
Coal Flow rate (lb/hr)	409,528	565,820	409,528
Natural Gas Flow rate (lb/hr)	N/A	N/A	110,901
HHV Thermal Input (kWth)	1,400,162	1,934,519	2,135,099
Net Plant HHV Efficiency (%)	39.3%	28.4%	40.7%
Net Plant HHV Heat Rate (Btu/kWh)	8,687	12,002	8,382
Raw Water Withdrawal (gpm/MWnet)	9.7	18.3	7.7
Process Water Discharge (gpm/MWnet)	2.0	4.3	1.8
Raw Water Consumption (gpm/MWnet)	7.7	14.1	5.9
CO_2 Emissions (lb/MMBtu)	204	20	13
CO_2 Emissions (lb/MWhgross)	1,675	203	99
CO_2 Emissions (lb/MWhnet)	1,768	244	111
SO_2 Emissions (lb/MMBtu)	0.0858	0.0016	0.0006
SO_2 Emissions (lb/MWhgross)	0.7063	0.0162	0.0045
NOx Emissions (lb/MMBtu)	0.07	0.07	0.0153
NOx Emissions (lb/MWhgross)	0.576	0.697	0.1143
PM Emissions (lb/MMBtu)	0.013	0.013	0.0043
PM Emissions (lb/MWhgross)	0.107	0.129	0.0318
Hg Emissions (lb/TBtu)	1.143	1.143	0.7513
Hg Emissions (lb/MWhgross)	9.41E-06	1.14E-05	5.60E-06
COST			
Total Plant Cost (2011$/kW)	1,981	3,563	2,321
Total Overnight Cost (2011$/kW)	2,452	4,391	2,842
Bare Erected Cost (2011$/kW)	1,622	2,744	1830
Home Office Expenses (2011$/kW)	148	252	172
Project Contingency (2011$/kW)	211	446	278
Process Contingency (2011$/kW)	0	121	41
Owner's Costs (2011$/kW)	470	828	521
Total Overnight Cost (2011$ x 1,000)	1,348,443	2,414,734	2,470,681
Total As Spent Capital (2011$/kW)	2780	5005	3,240
CO2 TS&M Costs (mills/kWh, 2011$)	0	10.0	6.1
Fuel Costs (mills/kWh, 2011$)	25.5	35.3	33.8
Variable Costs (mills/kWh, 2011$)	7.7	13.2	7.9
Fixed Costs (mills/kWh, 2011$)	9.5	15.7	6.5
Capital Costs (mills/kWh, 2011$)	38.4	73.3	47.5
COE (mills/kWh, 2011$)	**81.1**	**147.4**	**101.8**
COE Comparison to Case 2	-45.0%	Basis	-31.0%
Incremental COE, Case 1 Basis	Basis	81.7%	25.5%
LCOE (mills/kWh, 2011$)	102.9	186.9	129.1
Cost of CO_2 Captured ($/ton - 2011)	--	$ 60.25	$ 30.85
Cost of CO_2 Avoided ($/ton - 2011)	--	$ 87.02	$ 24.95
Cost of CO_2 Captured ($/tonne - 2011)	--	$ 66.40	$ 34.00
Cost of CO_2 Avoided ($/tonne - 2011)	--	$ 95.90	$ 27.49

Performance

The plant net efficiency (HHV basis) for all cases is presented in Figure ES-1. The key conclusions that can be drawn are:

- The CEPACS-equipped (for CO_2 capture) PC plant (Case 3) has the highest net electrical efficiency at 40.7%.
- The net electrical efficiency of the CEPACS-equipped PC plant is 3.6% higher than that of the baseline PC plant without CO_2 capture (Case 1).

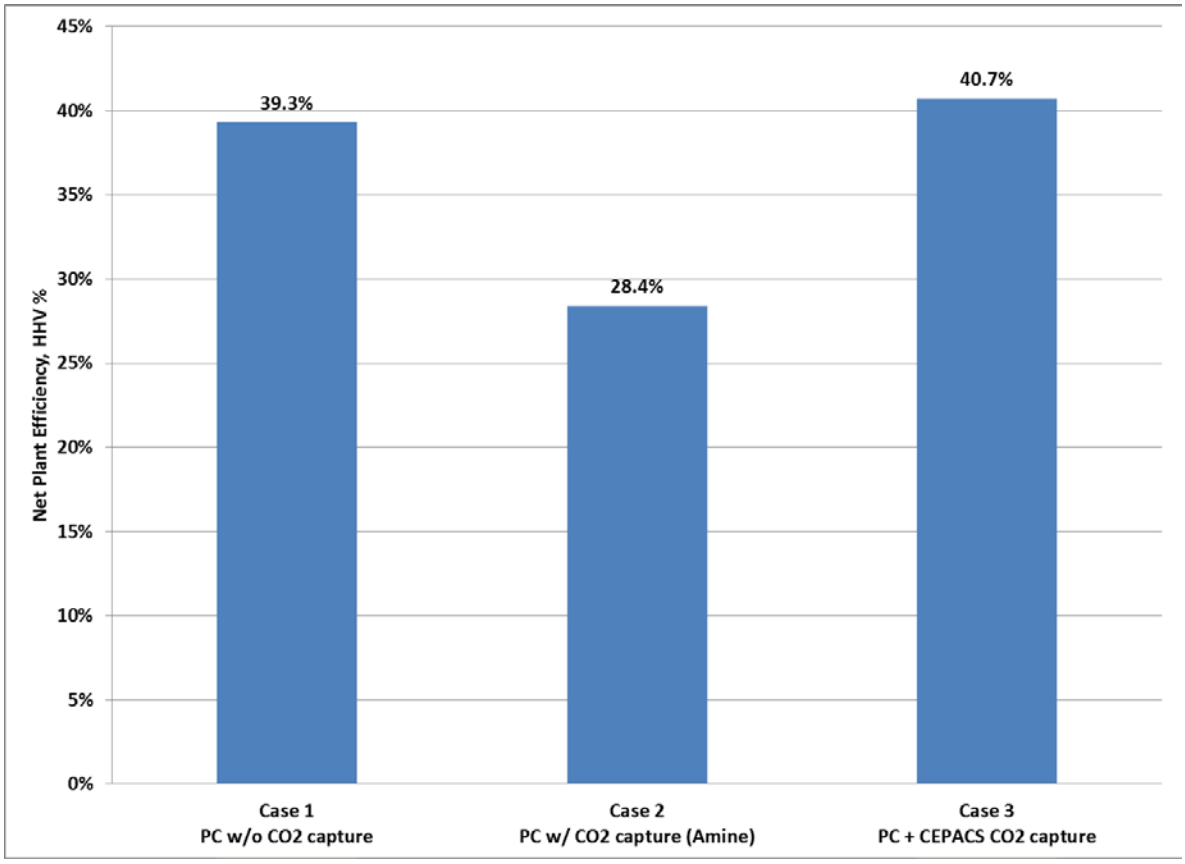

Figure ES-1. Plant Electrical Efficiency (HHV)

A comparison of water use is presented in Figure ES-2. Three categories related to water use, normalized by plant net power output, are shown: water withdrawal, discharge, and consumption. Water withdrawal is the amount of water removed from the ground or other supply source for the process. Water consumption is the amount of water that is consumed within the process (i.e.: evaporated, transpired, or incorporated into products). Water discharge is water that is treated and discharged to the environment. The primary conclusion that can be drawn is:

- The CEPACS-equipped PC plant (Case 3) has the lowest water use (withdrawal) requirements of all cases, including Case 1. Case 3 normalized water withdrawal is 20.6% less than that for Case 1 (no CO_2 capture). This is partially due to the fact that water is generated within the ECM stacks as a byproduct of the electrochemical reactions.

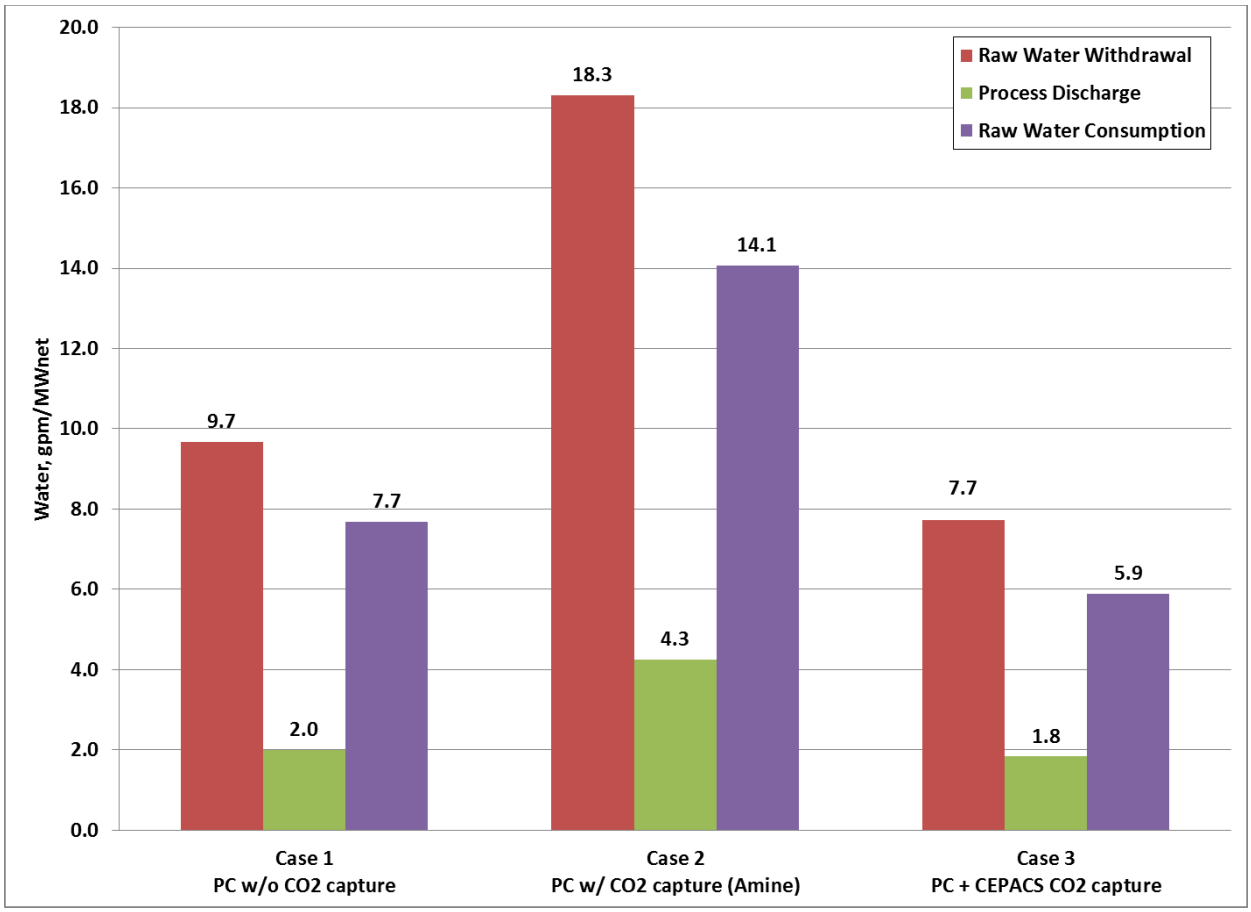

Figure ES-2. Water Use

Plant Capital Cost

The Total Overnight Cost (TOC) was estimated for each plant by adding owner's costs to the Total Plant Cost (TPC). The TPC for the CEPACS case was estimated by AECOM based on a combination of vendor quotations and in-house cost databases. The TPC and TOC estimates for Cases 1 and 2 were based on the reported values in the referenced DOE/NETL Baseline Bituminous report [5].

The normalized TOC (with breakdown by component) and Total As-Spent Capital (TASC) for each case are shown in Figure ES-3. The following key conclusions can be drawn:

- Case 3 (PC + CEPACS) has a lower TOC of the two cases with carbon capture, at $2,842/kW ($2011 USD).
- The TOC for Case 3 is only moderately higher (15.9%) than the TOC for Case 1. This is because the additional costs of the CEPACS system are partially offset by the additional power generated by the system.

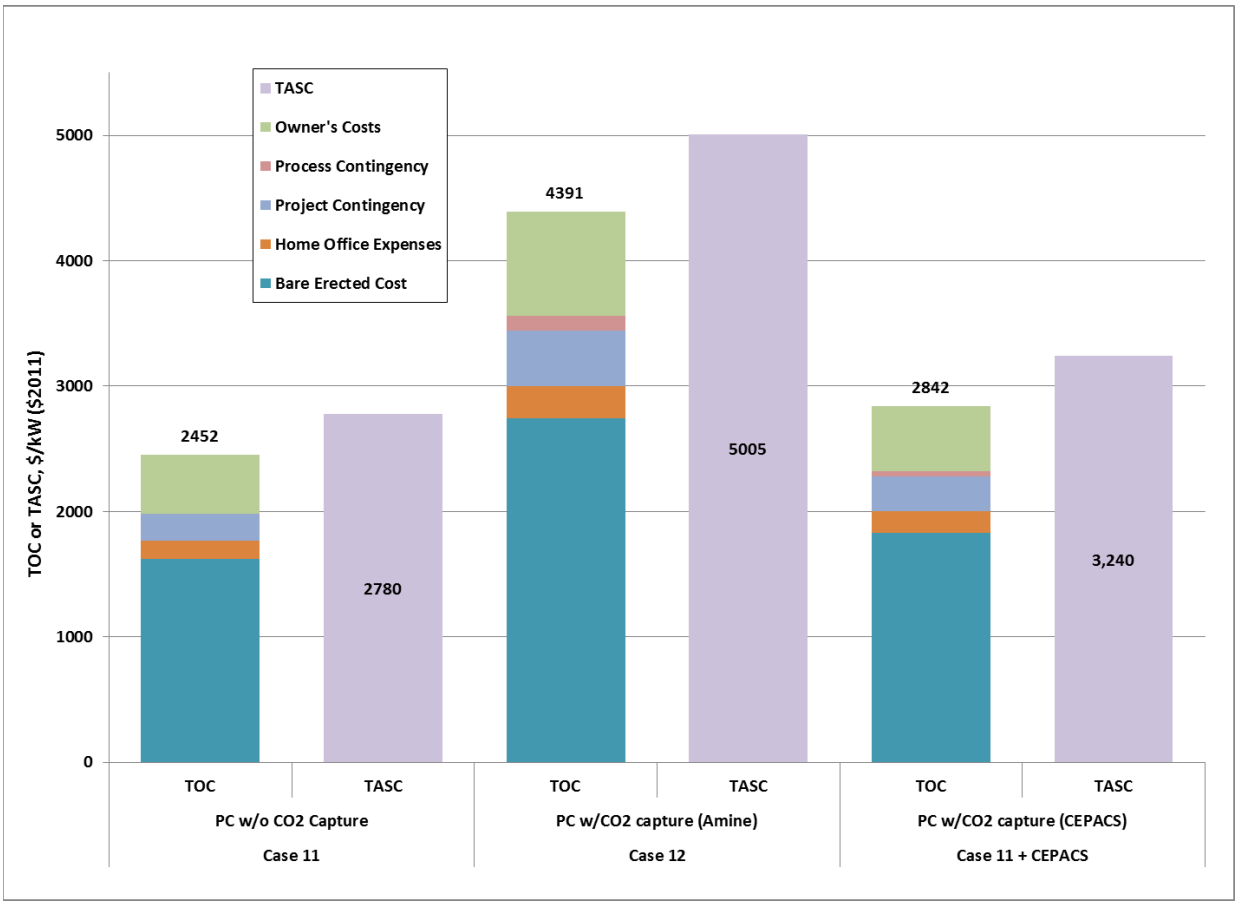

Figure ES-3. Plant Capital Costs

Cost of Electricity and CO_2 Captured

Figure ES-4 shows the Cost of Electricity (COE) with component breakdown and COE of Case 3 relative to Case 2. The following key conclusion can be drawn:

- Case 3 (PC + CEPACS) offers a lower COE of the two cases with carbon capture, at 101.8 mills/kWh. The COE for Case 3 is 31% lower than the Case 2 (Carbon Capture with Amine) which meets the DOE target for transformational technologies of being at least 30% below that for Case 2.

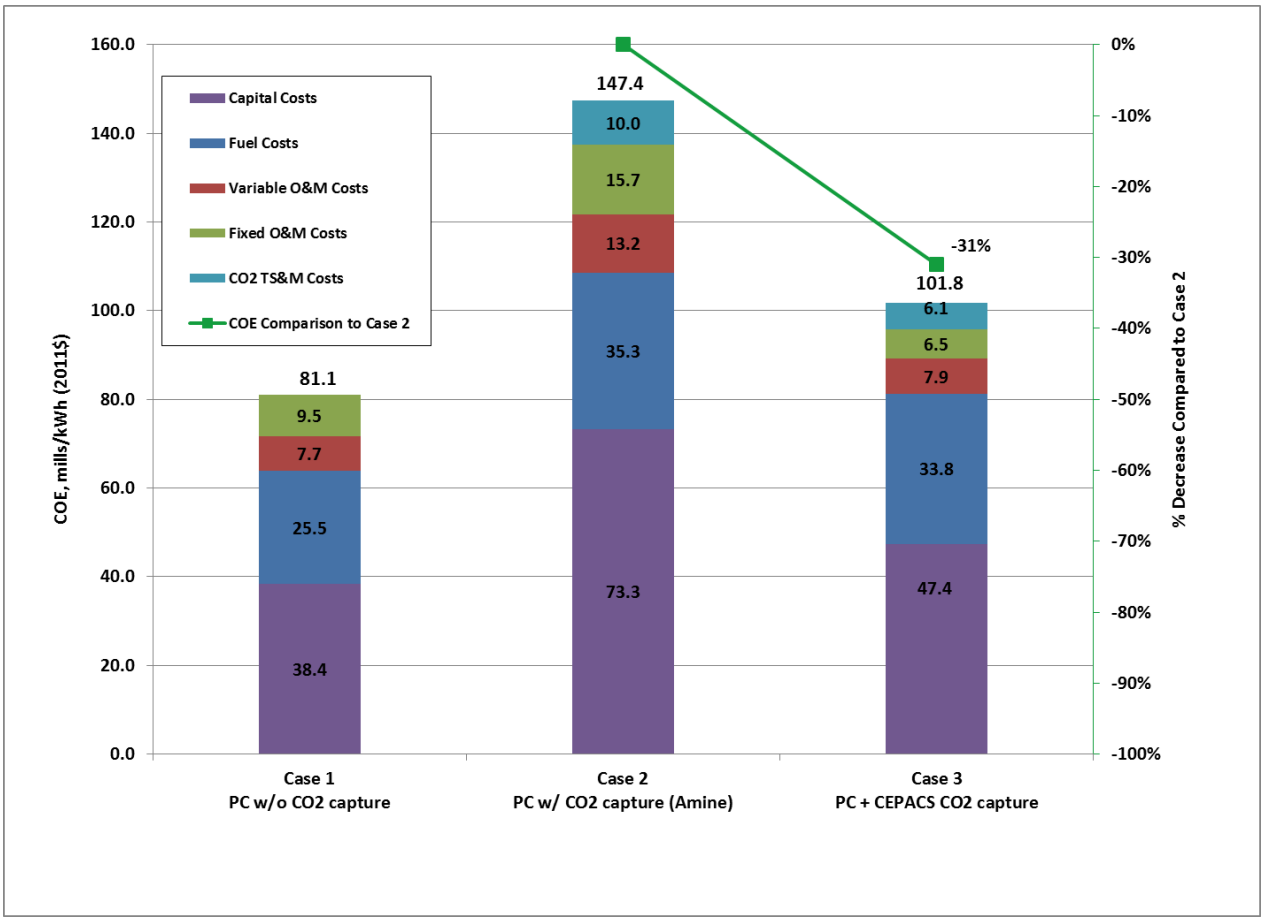

Figure ES-4. Cost of Electricity and Incremental COE

Figure ES-5 shows the cost of CO_2 captured (Case 1 as basis) calculated for the two carbon capture cases. The costs are shown in year 2011 dollars, and per metric ton of CO_2, for ease of comparison with recent published DOE targets. The following key conclusions can be drawn:

- The CEPACS system cost of CO_2 captured ($34.00/tonne) meets the DOE target of less than $40/tonne (2011 USD).
- The cost of CO_2 captured for the CEPACS-based process (Case 3) is 48.8% lower than that for the Econamine-based process (Case 2).
- The cost of CO_2 avoided for Case 3 is 71.3% lower than that for Case 2, due to the extra power generation of the CEPACS plant which results in significantly lower CO_2 emissions (lb/MWh) than Case 2, at fixed 90% CO_2 capture rate.

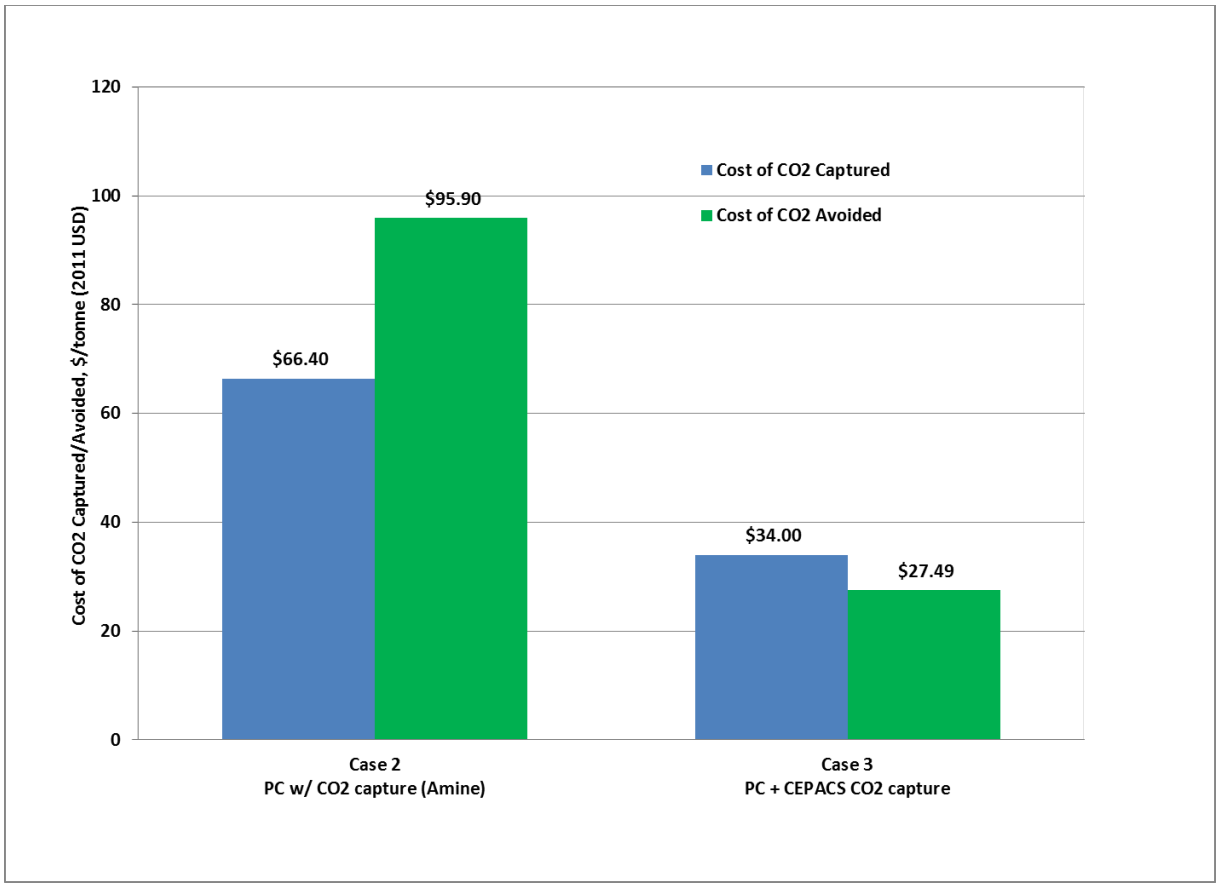

Figure ES-5. Cost of CO_2 Captured

Environmental Performance

Figure ES-6 shows the normalized emission rates of NO_x, SO_2, and particulate matter (PM) calculated for each case. Emission limits from the US EPA new source performance standards (NSPS) Mercury and Air Toxics Standards (MATS) are also shown in the Figure. The following key conclusions can be drawn:

- Cases with carbon capture (Cases 2 and 3) require SO_2 polishing equipment added to the baseline PC plant and, as such, they have very low SO_2 emissions.
- Case 3 has the lowest emission rates of SO_2, NO_x, and PM of all the cases studied.
- Case 3 has significantly lower emissions of SO_2, NO_x, and PM than required by the NSPS MATS rules.

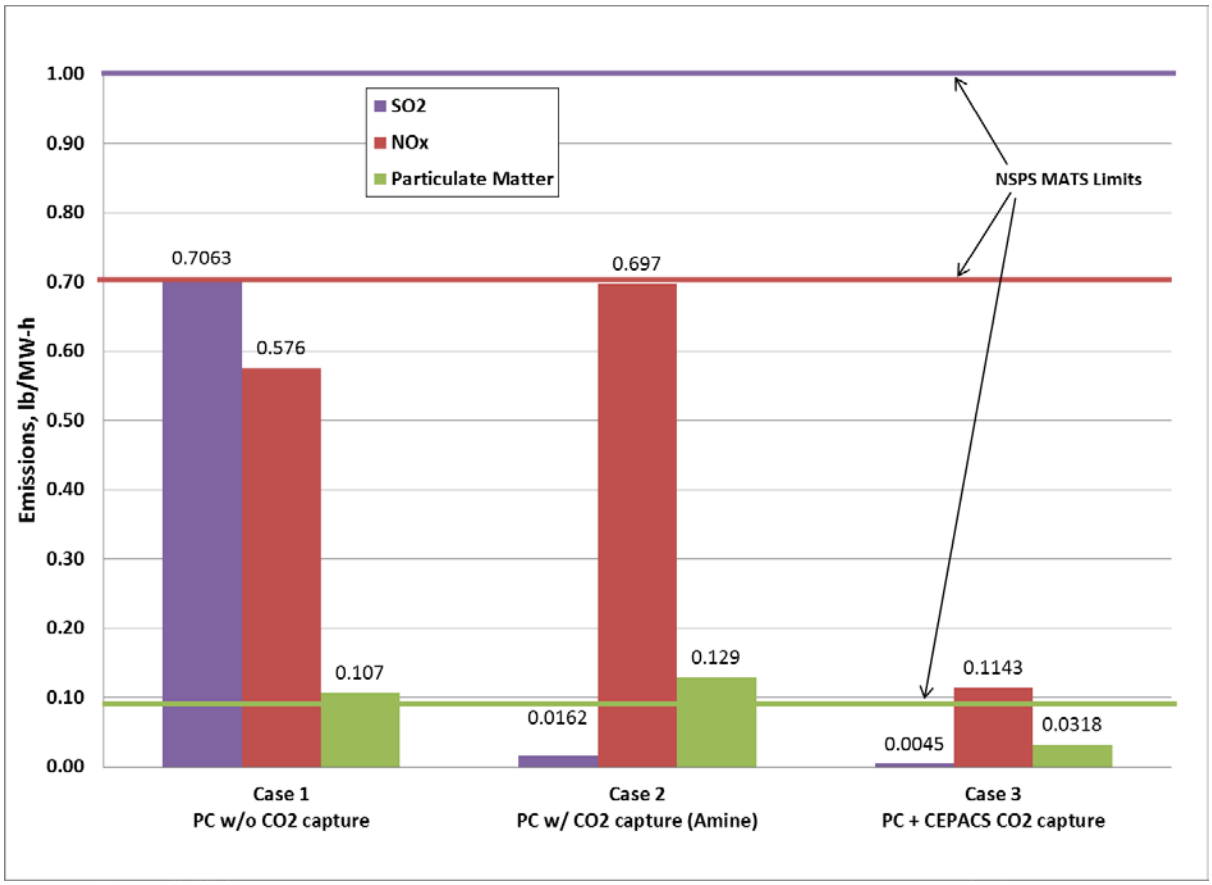

Figure ES-6. SO_2, NOx, and Particulate Emission Rates

Figure ES-7 shows the normalized emission rates of mercury calculated for each case. The following key conclusion can be drawn:

- Case 3 has lower Hg emissions than Cases 1 and 2 because a portion of the net power generation is fueled by natural gas, which contains negligible amounts of Hg. No additional Hg removal from the flue gas (due to the CEPACS system) was assumed for Case 3.

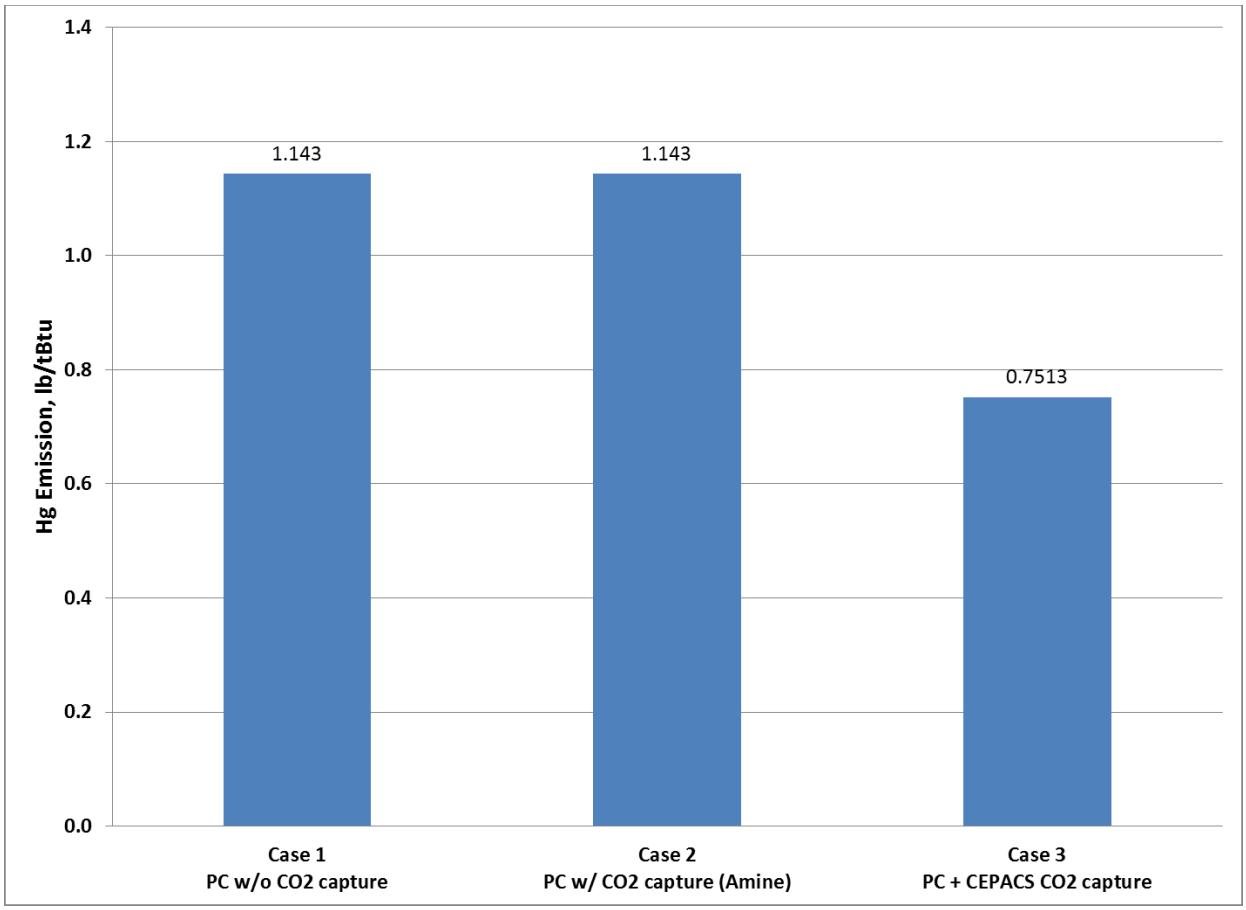

Figure ES-7. Mercury Emission Rates

Figure ES-8 shows the normalized emission rates of CO_2 calculated for each case. The following key conclusion can be drawn:

- Case 3 (PC + CEPACS) has the lowest CO_2 emissions of all the cases. This is due to the design criteria to capture 90% of the carbon which enters the CEPACS system in flue gas. Since the CEPACS system generates additional power, the CO_2 emissions (normalized by total plant net output) are 54.5% lower than those for Case 2.

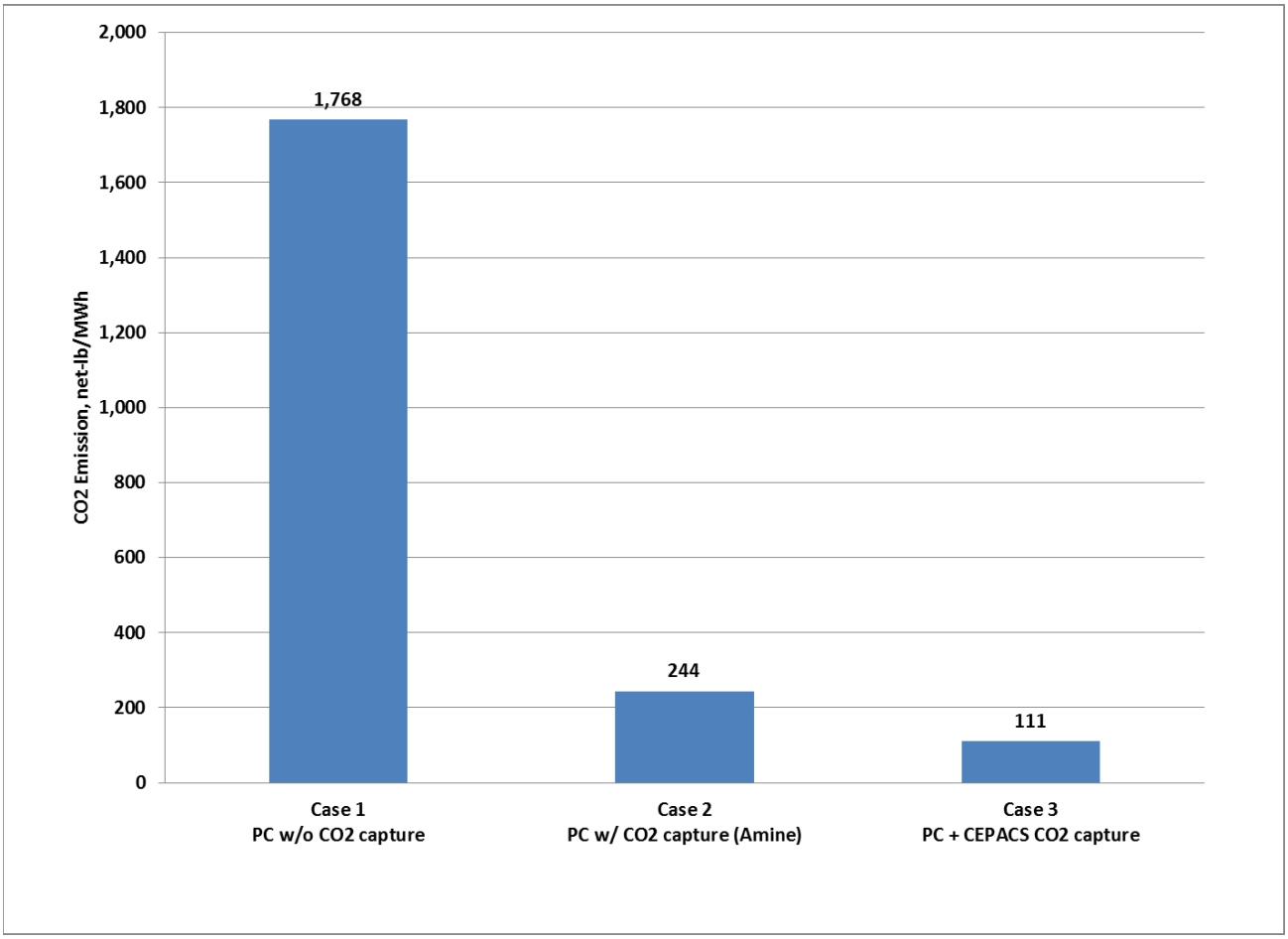

Figure ES-8. CO_2 Emission Rates

Overall, the CEPACS-based CO_2 capture process meets the DOE target for COE reduction compared to the baseline amine based process and the target for Cost per Tonne of CO_2 captured.

Liquid Emissions: The cooling tower blowdown water is utilized as feed water for the CEPACS Polishing FGD scrubber. This reduces the net water withdrawal of the CEPACS system. The cooling tower blowdown may contain chlorine and bromine as oxides.

The current water management system design limits remaining plant liquid discharge to Off-Design operations. Non-zero Off-Design water discharge would be directed to the Waste Water clarifier and then to the Permitted Discharge and Solid Waste.

Boiler blowdown water is directed to the site's waste treatment system for further treatment before disposal. The site's final treatment generally includes pH neutralization, biological oxygen demand control and removal of suspended solids.

Water recovered from the dewatering system is typically settled and ultimately discharged through plant's wastewater outfall. Elimination of this discharge requires an impact analysis of the resulting increased chloride concentration on the FGD materials of construction to determine if it is economically viable option.

Ancillary Emissions and Solid Wastes: Heavy metals are chiefly removed with the fly ash via particulate control in the PC plant. A small percentage of the heavy metals will pass through to the FGD scrubber and polishing scrubber, but are not expected to be above concentrations of concern. If heavy metals are found in the scrubber gypsum product, the product will not be sold and instead will be landfilled.

Limestone and limestone slurry management is not subject to specific requirements due to pH of toxicity. Dust generation is minimized through wet grinding. The spent Sulfur sorbent media is copper based and is subject to management and disposal per the RCRA and DOT waste management as hazardous waste. The Low Temperature Shift catalyst is copper based and is subject to RCRA Tier II reporting and management under hazardous waste regulations. No significant quantities of this media are expected to be generated as a waste through the life of the CEPACS plant. Spent filter cartridges from water treatment are expected to be generated every 3-4 months based on water demand and particulate concentration.

The ECM Stacks are comprised of materials that are potentially 100% recyclable though a spent stack is subject to management under the RCRA Hazardous Waste regulations. Dielectrics comprise 0.8% of an ECM stack. Broken or unusable dielectrics will be disposed of. All other components including stainless steel, cell packages and exotic metals can either be reused or recycled.

Ammonia is present as a refrigerant in the CEPACS absorption chillers and is likely present in SCR unit of the PC Plant for NO_x removal. Due to the quantities involved in the CEPACS process, a PSM/RMP program for ammonia management for the SCR process would likely require modification to include the ammonia in the CEPACS process.

Executive Summary Part 2 – 3 MW (Flue Gas Equivalent) ECM-based Pilot Plant Design

A summary of the detailed Front End Engineering Design (FEED) package for FCE's MW-class ECM-based CO_2 capture pilot system under Task 3.0 is presented in this report. FCE, in collaboration with AECOM Corporation and Southern Company Services, developed the novel MW-class CEPACS pilot system and associated interconnections to the host site.

Demonstration Site Selection

FCE identified and subsequently contacted 11 candidate sites to serve as the pilot system demonstration site. Of those contacted, further discussions were held with two sites:

1. James M. Barry Plant, coal and natural gas (2,657 MW), Bucks, AL, owned and operated by Alabama Power Company, a subsidiary of Southern Company.
2. Abbott Power plant, coal and natural gas cogeneration plant (80MWe + Steam), Champaign, IL

Southern Company's Plant Barry was selected as the demonstration host site because it offered the lowest cost for the site preparation and support as compared to Abbott plant. Additionally, the Plant Barry site has the following features:

- Plot space availability
- Existing flue connection supporting past carbon capture projects
- Supportive management and staff
- High capacity factor anticipated in future operations

Process Engineering and Equipment Design/Selection

The CEPACS system has three primary modes of operation, which are Standalone (power generation only), 70% carbon capture and 90% carbon capture from flue gas. In addition, the system includes heat-up and hot standby modes. Heat up mode consists of several steps which brings the fuel cell up to temperature and includes water and fuel enable. In hot standby mode, the system is at temperature and ready to produce power. Table ES-3 summarizes the primary modes of operation for the CEPACS system.

Table ES-3. Summary of CEPACS Modes of Operation

Mode #	Mode Description	Category
1	Standalone Power Generation	Operational Mode
2	70% Carbon Capture	
3	90% Carbon Capture	
4	Heat-up	Transitional Mode
5	Standby	

Table ES-4 provides an overview of the system performance in the three main operating modes. Standalone mode yields the greatest power output. This is because the ECM modules can be operated at their maximum current density, (due to high CO_2 and O_2 concentrations in the

cathode stream), and because the CO_2 purification train is powered down and not consuming a portion of the gross power generation. In addition, standalone mode gives the highest electrical efficiency since the amount of parasitic load compared to the carbon capture modes is relatively small.

The 70% carbon capture case generates 38% more power than the 90% carbon capture mode. This results in more total flue gas processed and more CO_2 captured than the 90% capture mode. However, due to the larger gas flowrates when operating in 70% capture mode, the balance of plant loads are greater, resulting in slightly lower efficiency.

Table ES-4. SureSource Capture System Performance Summary

Operating Mode	90% Capture Coal-Derived FG		70% Capture Coal-Derived FG		Stand-Alone (No FG Available)	
MCFC Gross Power, DC	**1863.4**	**kW**	**2542.9**	**kW**	**3112.3**	**kW**
Energy & Water Input						
Natural Gas Fuel Flow	169.4	scfm	243.2	scfm	329.9	scfm
Fuel Energy (LHV)	2877.8	kW	4087.0	kW	5723.1	kW
Water Consumed/(Produced)	(1.8)	gpm	(2.4)	gpm	(0.3)	gpm
Consumed Power						
AC Power Consumption	(611.0)	kW	(911.6)	kW	(206.0)	kW
Inverter Loss	(74.5)	kW	(101.7)	kW	(124.5)	kW
Total Parasitic Power Consumption	**(685.6)**	**kW**	**(1013.3)**	**kW**	**(330.5)**	**kW**
Net Generation & Efficiency						
CEPACS Plant Net AC Output	**1177.8**	**kW**	**1529.6**	**kW**	**2781.8**	**kW**
Electrical Efficiency (LHV)	**40.9**	**%**	**37.4**	**%**	**48.6**	**%**
Carbon Capture						
Total Carbon Capture, %	**92**	**%**	**75**	**%**	**N/A**	
Carbon Capture from FG, %	**90**	**%**	**70**	**%**	**N/A**	
Total CO_2 Captured, Tons per Day	**67**	**T/D**	**93**	**T/D**	**0**	**T/D**
CO_2 Purity	**99.6**	**%**	**99.6**	**%**	**N/A**	

The detailed process design of the pilot plant has been completed, and includes the following components:

a) **Design Basis** – The Design Basis for the pilot plant includes 10 distinct aspects of engineering design for consideration during the design phase. These aspects include: Baseline Conditions, Project Scope, Site Requirements, Detailed Engineering Package Deliverables, Design Philosophy, Design Criteria, Process Stream Monitoring and Analysis, Schedule, Codes, Standards and Certifications, and Safety.

b) **Process Flow Diagrams** – The process flow diagram (PFD) was developed in conjunction with preliminary Heat and Material Balances to define the plant configuration. The PFD comprises two sheets, with the main process on the first sheet, and the flue gas cleanup system on the second sheet.

c) **Heat and Material Balances (H&MBs)** – H&MBs were completed using commercial process simulation software (Chemcad), modified with custom-code to model the ECMs and to semi-automate convergence and reporting. Following, system configuration

analysis H&MBs to downselect the preferred PFD, over 100 cases were run (multiple revisions of 40 discreet operating points). The cases define the system operating conditions at various operating modes, ambient conditions, and host plant conditions (e.g. flue gas supply characteristics).

d) **Piping and Instrumentation Diagrams (P&IDs)** – The P&IDs are comprised of 32 sheets for the various unit operations of the system as well as logic references. Primary and secondary level process control logic is noted throughout the sheets. The P&IDs formed the basis of the HAZOP analysis, and were subsequently updated based on the results and recommendations of the system HAZOP analysis.

e) **System Pressure Profile & Piping Design** – A detailed piping network analysis of the pilot system was performed using PipeFlo Pro software. The analysis was utilized to optimally size piping, size and select control valves, and to specify blowers. Pipe classes were selected based on FCE's existing piping specifications using the design conditions defined on the piping list. In cases were no suitable line class specification existed, new specification were developed for this application (e.g. fiberglass reinforced plastic for certain flue gas lines).

f) **Instrument Specifications and Selection** – A master Instrument and I/O List was assembled. The Instrument and I/O List, derived from the P&IDs, is used to manage the specification and procurement of all instruments, such as control valves, safety relief valves, transmitters, analyzers and switches. The master Instrument and I/O List contains 696 items. Important design information, as appropriate to each item, is entered there for quick and convenient reference.

g) **Hazard and Operability Analysis (HAZOP)** – To ensure intrinsic plant safety and minimize the probability of operability issues, a complete hazard and operability (HAZOP) study was performed on the ECM pilot plant in accordance with FCE's Standard Work Instructions. A series of 25 HAZOP meetings were held to investigate each of over 80 nodes identified on the P&IDs. After the detailing of all hypothesized process deviations and their potential causes, the consequences of these deviations were outlined. Next, specific documented safeguards which directly act on the deviation–cause pair are enumerated. Finally, the team rates the deviation–cause–consequence severity and the likelihood of occurrence using a defined quantitative matrix. In cases where an unacceptable risk remained, recommended action items were developed and assigned to an engineer for evaluation and implementation.

h) **Equipment Engineering** – All major equipment has been selected based on the process requirements for the pilot plant. Wherever possible, carryover equipment from FCE's SureSource 3000 and 4000 power plants was utilized as-is, or with modifications. For new CEPACS-specific equipment, designs which were readily available as commercial off-the-shelf (COTS) items from vendors were preferred. In cases where there were no suitable COTS designs available from vendors that fulfilled the process requirements, custom designs were developed either by FCE in-house, using resources and technical knowledge of similar equipment from previously-developed FCE systems, or in collaboration with equipment vendors.

Detailed Mechanical Design

FCE employed a detailed design approach that allows for a fast and predictable manufacturing and installation process. The process began by gathering inputs from the process design team, P&ID, and equipment selections. A fully-detailed 3-D model was created from this information, down to the nuts and bolts. Having this level of detail included in the model ensures that everything is accounted for up-front and there are few surprises during manufacturing, procurement and installation.

The CEPACS pilot plant requirements have driven a design based on modularized skids. Each skid is comprised of several component parts that are manufactured elsewhere and will be assembled on site. The benefits of such a design philosophy are fivefold: reduced cost due to productivity-enhancing indoor fabrication shop conditions and minimized fieldwork, increased safety due to well-controlled manufacturing conditions, improved logistics, improved quality, and reduced plant footprint. Certain skids, such as the ECM modules and main process skid, are designed by FCE and will be manufactured according to FCE's design and drawings. Other skids are designed and manufactured by equipment vendors, according to FCE specifications.

The CEPACS general arrangement has been developed and refined over the life of the design effort in order to satisfy many constraints, requirements, and safety and maintenance best practices. Figure ES-9 shows the overall plant arrangement of the CEPACS pilot system. It is designed to fit within the space available at Plant Barry.

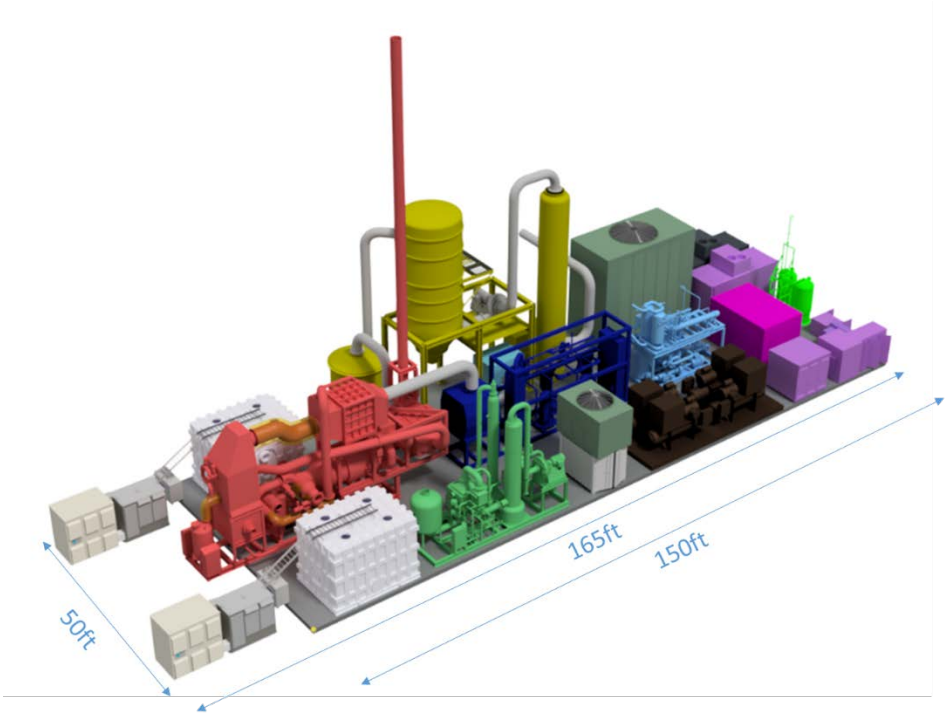

Figure ES-9. Overall Plant Arrangement – ISO View

Detailed Electrical Design

The detailed electrical design methodology utilized for the Pilot Plant was to utilize as many of the existing main electrical components from FCE's SureSource 3000 and 4000 products as possible. These components are already designed, fabricated, tested, qualified and validated as IEEE1547 & UL1741 compliant commercial products. The pilot plant's main electrical components consist of plant power generation, transmission, utility connections, power distribution and electric fault protection equipment.

The power distribution system distributes electric power to all mechanical and process control equipment in the plant. The system is comprised of powered equipment, components, enclosures, containers, transformers, switchgears, cables, pull boxes, stub-up fittings, connectors, terminators, junction boxes, spacers, circuit breakers, isolation fuses, silicon controlled rectifiers (SCRs), variable frequency drives (VFDs), power quality filters, voltage sensors, current sensors, power relays, and power control switches.

The system utilizes two DC-AC inverters and two 370V to 13.8kV utility connection isolation transformers to source a 13.8kV net AC output transmission feeder line (2.8MW, 3ph, 60Hz). The feeder line connects to the Plant Barry utility interface and also powers the main balance of plant (BoP) transformer. The BoP transformer outputs 4160V with a 15kV switchgear to distribute 4160V to BoP loads as required. It also powers the (2MW, 3ph, 60Hz) 480V transformer with a 3000A feeder bus switchboard to distribute 480V to BoP loads as required, as well as to stepdown transformers and power supplies to provide single phase 120VAC and 24VDC as needed for process control.

A hazardous area classification analysis was performed. The presence of hydrogen, carbon monoxide, ammonia and natural gas within the various sub-processes has the potential to create hazardous areas as defined by NFPA 70, NEC 500 - 506 within the pilot plant. There are two applicable classifications for the sub-processes per NFPA: Class 1 Division 1 and Class 1 Division 2. The Group ratings vary from B through D depending upon the specific gas present within the equipment. All equipment and instrumentation are designed, built and rated for service within the classified areas in which they are located. All other areas of the Pilot Plant are considered unclassified and the respective equipment and instrumentation are rated for service in general-purpose areas. Though located in non-hazardous areas, the equipment and instrumentation are designed and configured with protection for personnel safety and for service in an outdoor environment.

Engineering of Tie-Ins to Plant Barry

AECOM led the engineering effort on behalf of FCE to connect the SureSource Capture Pilot Plant to the Plant Barry main plant. To kick-off the tie-in engineering effort, FCE first assembled the pilot plant tie-in requirements, as shown in Table ES-5. Interconnections are required for process streams, electrical, high speed data connection, and control communications.

Table ES-5. Interconnection Characteristics

Utility	Characteristics	Value	Units
Natural Gas Supply	Pressure	15-20	Psig
	Maximum Flow, Standalone mode	362	SCFM*
Water Supply			
Process Water Supply (Demineralized)	Pressure, min.	30	Psig
	Nominal Flow	13	gpm
	Maximum Flow	20	gpm
Water Discharge	Maximum Flow	4.17	gpm
Flue Gas	Pressure (nominal)	14.6	Psia
	Temperature (nominal)	131	°F
	Nominal Flow, 70% capture rate, 12% CO_2	50,000	lb/hr
		11,140	SCFM*
Electric Power (Start-up and Shutdown periods only)	Auxiliary Loads	450	kW
	Voltage	13,800	Volts
Electric Power (Start-up and Shutdown periods only)	Power Generation, Standalone Mode	2,800	kW
	Voltage	13,800	Volts
Communication Connection (External)	One high-speed Internet connection (≥128 kbps with static IP address)		
Communication Connection (SureSource Capture to Host)	Control permissives/status over Ethernet to host plant DCS. Hardwired Emergency Shutdown signal.		
*** Standard Conditions: 1 atm @ 60°F**			

The tie-in point locations were developed by the entire project team. Discussions surrounding the tie-in points involved two site visits by project personnel. All tie-in points have been approved by the Plant Barry review board. A summary of the process and electrical tie point designs is shown in Table ES-6.

Table ES-6. Pilot Plant Process and Electrical Tie-In Points Summary

Process Tie-Point Description	Sizing Basis	Size & Material
13.8 kV Electrical Power	45A incoming; 125A output	3/0 copper (per phase)
Water Supply	20 gpm (max)	1” 304 SS
Natural Gas	362 SCFM	3” carbon steel
Flue Gas	50,000 lb/hr	24” FRP
Discharge Water	6,000 gpd	2” HDPE

The plant site location was determined through discussions with Southern Company, AECOM, McAbee (construction services), and FCE. Figure ES-10 shows a schematic of the plant site location and major interconnections locations and routing. Originally the plant was oriented with the modules on its western side and the flue gas cleanup train up against the existing flue gas pipeline to the north. Upon review with Plant Barry operating personnel, it was determined that the original location would impede a truck access lane just south of the existing pipe rack. This development caused the team to re-orient the plant to fit between existing buildings in the parking lot south of the original site.

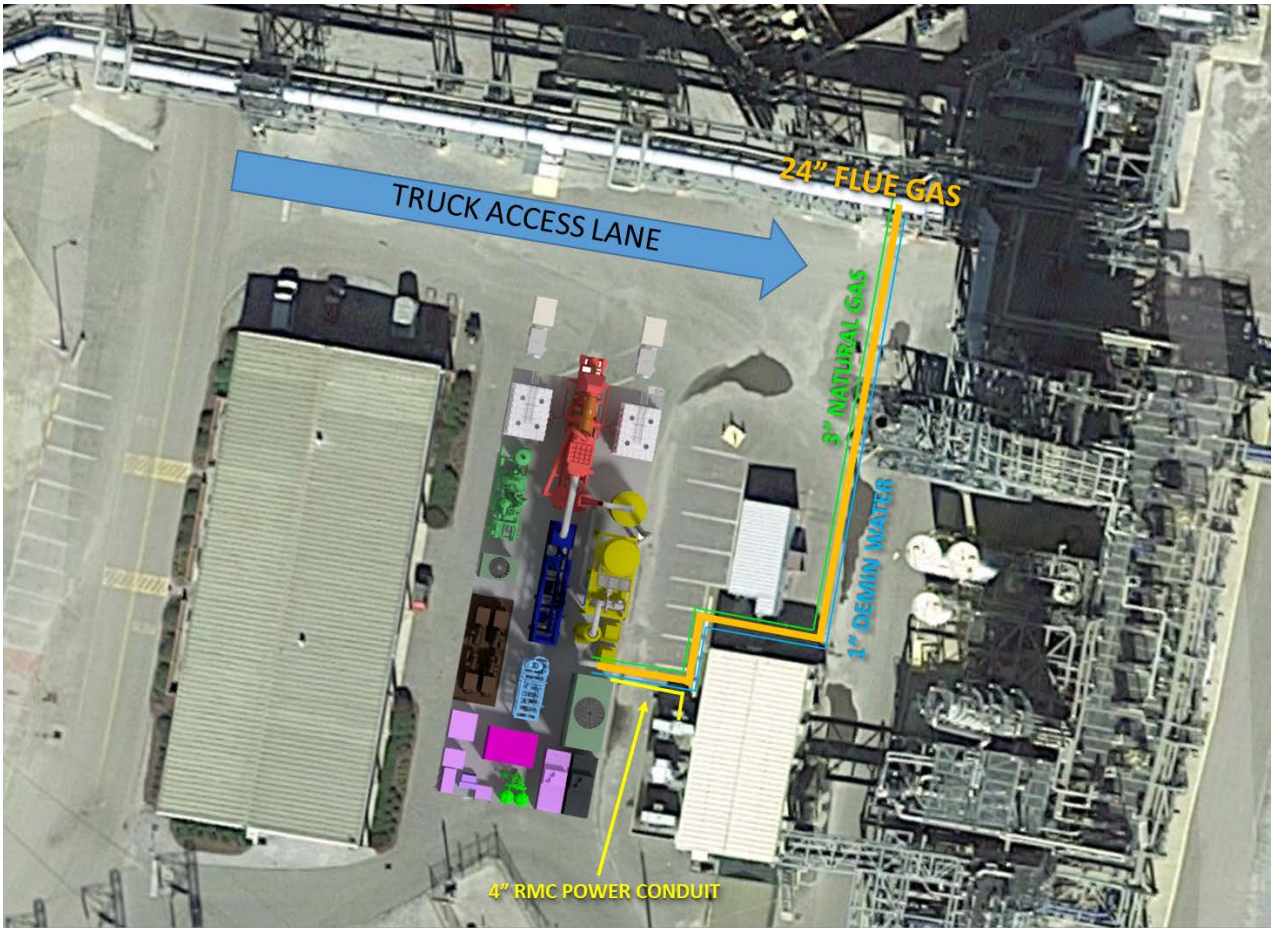

Figure ES-10. Pilot Plant Site Location at Plant Barry with Interconnection Locations

AECOM has produced preliminary pilot plant general arrangement and foundation details drawings. The site drawings will be updated and finalized after procurement activities commence and final skid support details are obtained from equipment vendors.

Air and Water Permitting: The pilot plant will generate water discharge streams from some of its unit operations, most significantly from the Hybrid Cooling Tower blowdown on warm days. The plant will generate discharge water at an average rate between 1.1 gpm and 4.1 gpm from sources within the system depending upon the mode of operation and ambient conditions.

It was initially planned to send the discharge water from the Pilot Plant to Plant Barry's on-site Waste Water Treatment facility. However, this option was not pursued because Plant Barry cannot obtain a modification to its existing permitted system to allow for the addition of a new point source contribution to its operations. The option for on-site accumulation and off-site disposal was researched and found to be impractical due to the large quantity on on-site storage

and high costs (approximately $100,000 for two months of operations) for removal and off-site treatment. As a result, it was decided to pursue a dedicated point source discharge with its own permit. The water will be pumped periodically as a single discharge stream from the pilot facility to a canal located to the southwest of the pilot plant. The water discharge permit application has been prepared and submitted to the Alabama Department of Environmental Management (ADEM) for review and approval prior to plant installation. Although, the final water discharge permit was not secured in Budget Period 1, a draft permit has been issued and referred for inter-agency comment.

The SureSource Capture Pilot Plant will have a single point source exhaust to the air. The exhaust composition has been characterized for several operating modes based on the detailed component composition supplied for the flue gas and process modeling of the carbon capture system. SCS has had a preliminary conversation with ADEM regarding the project. Due to the very low emissions and the short duration of testing, ADEM is not inclined to issue an Air Permit for the project. ADEM believes any requirements and approvals can be appropriately handled via letter exchanges. SCS, with support from FCE, developed a request for a written determination from ADEM that no air permit is required for the system. The request is ready to be submitted in a follow-on project phase.

However, all regulatory matters are not under ADEM's authority. For instance, ADEM cannot approve alternate monitoring approaches. To comply with regulatory requirements for mercury monitoring, Plant Barry is required to have a Continuous Emissions Monitoring System (CEMS) on all flue gas streams. Consequently, the Pilot Plant will require a sorbent trap to be installed and integrated into the Air Pollution Control system so that the data can account for the emissions of the slipstream flue gas in conjunction with the emissions from the main flue gas exhaust. The existing CEMS on the slipstream duct to the pilot plant is included in the Plant Barry Monitoring Plan submitted and approved by EPA. However, due to difference in flow rate between the pilot plant and previous slipstream testing at Plant Barry, the locations of existing CEMS probes in the duct will need to be modified to maintain compliance. No additional EPA approvals are required.

Pilot Plant Design Summary

The detailed Front End Engineering Design package for FuelCell Energy's MW-class Electrochemical Membrane-based CO_2 capture pilot system is complete. The design package includes tie-ins to interconnect the pilot plant to the existing infrastructure and flue gas supply at Southern Company's Plant Barry Unit 5 in Bucks, Alabama. The pilot plant is designed to capture ≥90% of CO_2 (67 tons/day) from a PC plant flue gas slipstream and produce high-purity (≥95%) CO_2, in accordance with the project objectives. The design has progressed to the point at which equipment/component procurement, skid final design and fabrication, and site preparation activities can be initiated in the subsequent project stage.

INTRODUCTION AND OBJECTIVES

FuelCell Energy, Inc. (FCE), in collaboration with AECOM Corporation and Southern Company Services, is developing a novel Combined Electric Power and Carbon-dioxide Separation (CEPACS) system. The CEPACS system is based on electrochemical membrane (ECM) technology derived from FCE's well-established carbonate SureSource™ products featuring internal (methane steam) reforming. The unique chemistry of carbonate fuel cells offers an innovative approach for separation of CO_2 from existing fossil-fuel power plant exhaust streams (flue gases). The ECM-based CEPACS system has the potential to become a transformational CO_2-separation technology by working as two devices in one: it separates the CO_2 from the exhaust of other plants such as an existing coal-fired plant and simultaneously produces clean electric power at high efficiency using a supplementary fuel.

The development effort is being carried out as part of the U.S. Department of Energy (DOE) cooperative agreement DE-FE0026580. The overall objective of this project is to verify that FCE's ECM-based CEPACS system can achieve at least 90% CO_2 capture from Pulverized Coal (PC) power plant flue gas with 95% CO_2 purity at a Cost of Electricity (COE) 30% less than the baseline CO_2 capture approaches. Meeting this overall objective is expected to pave the path towards commercial deployment of large-scale coal based ECM systems for carbon capture applications by 2030, directly supporting the Department of Energy (DOE) carbon capture program goals.

This final technical report summarizes the ECM operating characteristics, preliminary Techno-Economic Analysis and EH&S Assessment, system performance and detailed design of the CEPACS pilot system, which includes the engineering of tie-ins to the host site. The specific objectives for Budget Period 1 (BP1) are broken down into two tasks:

- Task 2.0 – Complete the preliminary Techno-Economic Analysis and EH&S Assessment on the ECM technology for capturing ≥90% of CO_2 from a PC plant flue-gas stream, showing the potential of ECM to meet the DOE's cost and performance goals for post combustion carbon capture. This study will be based on the current state of ECM technology scaled up to a carbon capture system applied to a 550 MW_e super-critical PC power plant.
- Task 3.0 – Complete the detailed design for a pilot 3 MW_e (flue gas equivalent) (60 CO_2 TPD) ECM-based CEPACS system designed to capture ≥90% of CO_2 from a PC plant flue gas slipstream and produce high-purity (≥95%) CO_2.

The CEPACS system is also referred to as the Pilot Plant and the SureSource Capture system in this report.

Section 1.0 of this report discusses the TEA and EH&S assessment for an ECM-based CEPACS system applied to a 550 MW PC supercritical power plant for 90% CO_2 capture.

- **Section 1.1** presents the TEA results, including design basis, performance and plant economics
- **Section 1.2** presents the EH&S assessment, including process, ancillary, and incidental emissions

Section 2.0 of this report discusses the detailed design package for a pilot-scale ECM-based CEPACS system to capture and purify at least 90% of CO_2 from a nominal 3 MW equivalent flue gas slipstream based upon FCE's SureSource 3000 power system. This includes:

- **Section 2.1** discusses Process Engineering of the pilot plant, including heat and material balances, Piping and Instrumentation Diagrams (P&IDs), and rigorous safety analysis.

- **Section 2.2** describes the specification, selection, and/or design of the Pilot Plant Equipment.
- **Section 2.3** reviews the Mechanical Engineering of pilot plant equipment, custom process skids, and integration of skids into the overall plant layout.
- **Section 2.4** presents the Electrical Engineering package for the pilot plant.
- **Section 2.5** discusses the Engineering for Tie-Ins to Plant Barry, including site location and foundation design, process piping connections, electrical tie-in, communications and control interconnections, as well as air and water permitting requirements.

ECM Technology - Operating Principle

The operating principle of the electrochemical membrane, including the mechanism for transport of CO_2 (by migration of carbonate ions through electrolyte) from the cathode to the anode of the cell, is shown in Figure I-1, along with the electrochemical reactions.

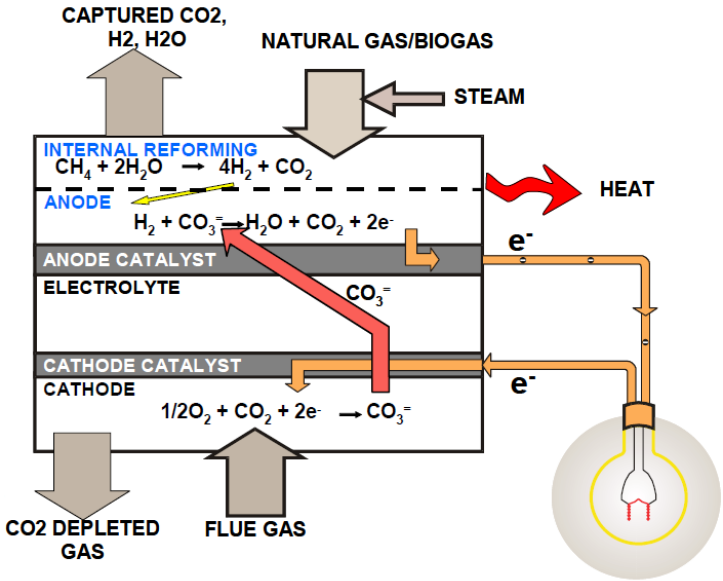

Figure I-1. Transport of CO_2 in the Electrochemical Membrane Cell: CO_2 is used at the cathode as an oxidant and transferred to the anode via carbonate ions

The flue gas from an existing power plant, containing CO_2, is fed to the cathode side of the cell. A supplemental fuel is supplied to the anode side of the cell. The ECM technology is compatible with numerous methane-containing fuels such as: coal and biomass derived syngas, natural gas (NG), and biogas (e.g. anaerobic digester gas). The pilot plant is designed to operate with natural gas as the supplemental fuel. Due to the internal reforming capability of the ECM cell, methane in the fuel is converted (steam reformed) into hydrogen according to the following reaction:

$$CH_4 + 2H_2O \rightarrow CO_2 + 4H_2$$

Hydrogen is used as a reactant at the anode. Carbon dioxide and oxygen present in the flue gas are used as reactants at the cathode. The electrochemical reaction at the ECM cell cathode (Figure I-1) involves the formation of carbonate ions (CO_3^{2-}) by combination of O_2, CO_2 and two electrons. Carbonate ions produced at the cathode migrate to the anode side via the electrolyte in the cell. At the anode, the reaction of the carbonate ion with H_2 produces H_2O, CO_2 and two electrons. The internal transport of carbonate ions in the ECM cell and flow of electrons in the

external circuit results in power generation as a consequence of the CO_2 separation process. DC power produced is converted to AC power using an inverter.

Overall, the operating mechanism of the ECM cell results in the separation (from flue gas) and transfer of CO_2 into the anode exhaust stream which has a much reduced volumetric flow (resulting in a CO_2-rich stream) compared to the flue gas stream. The CO_2-rich anode exhaust gas is further processed in the ECM-based CEPACS system to purify the CO_2 for compression and sequestration.

The ECM cell operates at 550-650°C and atmospheric pressure. Unlike conventional membrane technologies that rely on pressure (partial pressure) differentials and permeability properties, ECM separates CO_2 at a rate dependent on the electrical current drawn. The flue gas does not need to be pressurized and vacuum operation is not required on the permeate side. Because of fast electrode kinetics, the ECM cell does not require high CO_2 concentration in the flue gas feed. Planar geometry and large gas flow channels of the ECM cell enable processing of large volumetric flow of flue gas feed without significant back pressure. The ECM membrane is fabricated from inexpensive inorganic materials.

RESULTS AND DISCUSSIONS

1.0 Task 2.0 – Preliminary Techno-Economic Analysis and EH&S Assessment

1.1 Preliminary Techno-Economic Analysis

1.1.1 Design Basis

The design basis used in the design of the CEPACS plant is summarized in this section.

Site Location: The generic site location is in the U.S. It is assumed that the battery limits of the CEPACS plant are adjacent to the existing PC plant flue gas desulfurization (FGD) scrubber.

Design Life: For the purpose of developing the TEA, a 30-year design life for the CEPACS system is assumed. The ECM stacks have a lifetime of 10 years, after which they are replaced. The used stacks are returned to FCE.

Turndown Requirements: The CEPACS plant (facility) shall be capable of processing inlet gas (flue gas) on a stable and continuous basis up to the Design Capacity conditions. The plant will have eight (8) parallel trains (sections) of ECM stacks. Each process train can be shut down independently for maintenance and/or capacity reduction, if required.

Availability: The facility shall be designed for a 93% availability factor. Loss of availability includes unscheduled shutdowns and scheduled downtime to perform inspection, maintenance, etc. The availability factor of 93% allows for the following typical average downtimes:

ACTIVITY	DOWNTIME
Unscheduled Shutdowns	12 days/year
Blowers / Compressor Maintenance	Annual, 9 days/year
3 year Maintenance	15 days
6 year Maintenance	27 days
10 year Maintenance	20 days
(ECM Stack Replacement)	(Staged in 208-stack groups)

Sparing Philosophy: The general sparing philosophy is 1 x 100% sparing for each section of ECM stacks since the plant has eight (8) separate sections which can be shut down independently. Individual equipment sparing was selected by AECOM based on experience.

Flue Gas Feed and Related Specifications: Table 1-1 presents the flue gas composition and conditions (based on Case 11 of the DOE/NETL report [5]) that were used for the TEA. The flue gas flow rate is based on a 550 MW (net AC) PC power plant.

Table 1-1. PC Plant Flue Gas Specifications

Flowrate (mass)	4,713,221 lb/h (2,142,373 kg/h)
Pressure	14.8 psia (102 kPa abs)
Temperature	135 °F (57 °C)
Composition (volume %)	
CO_2	13.53
H_2O	15.17
N_2	68.08
O_2	2.4
Ar	0.8
SO_X	42 ppm_v
NO_X	74 ppm_v

Pipeline natural gas is used as the supplementary fuel for the ECM stacks in the CEPACS system. The natural gas specification is shown in Table 1-2.

Table 1-2. Pipeline Natural Gas Specification

Component		Volume %
Methane	CH_4	93.1
Ethane	C_2H_6	3.2
Propane	C_3H_8	0.7
n-Butane	C_4H_{10}	0.4
Carbon Dioxide	CO_2	1.0
Nitrogen	N_2	1.6
	Total	100.0
Total Sulfur		3.0 ppm_v
	LHV	**HHV**
kJ/kg MJ/scm	47,454 34.71	52,581 38.46
Btu/lb Btu/scf	20,410 932	22,600 1,032

CO_2 Product and Other Specifications: Table 1-3 lists the CO2 capture requirement and product specification.

Table 1-3. CO_2 Capture Requirement and Product Specification

CO_2 Removal from Flue Gas	Greater than 90%
CO_2 Purity	Greater than 95 vol%
CO_2 Delivery Pressure	2,215 psia (15.3 MPa abs)

The conditions for cooling water were assumed to be the feed at 60°F (15.6°C), the return at <80°F (26.7°C) and the minimum approach ΔT of 30°F (16.7°C).

Cost Estimation: The NETL cost estimation methodology guideline document (mentioned under the 'Experimental Methods' section) was used as a main reference to generate costing. The capital cost levels and their elements are shown in Figure 1-1. Cost estimates for all major process equipment and subsystems were generated from vendor contacts and AECOM's historical cost databases. The cost estimate includes the cost of consumables and vendor-quoted costs for key process equipment items.

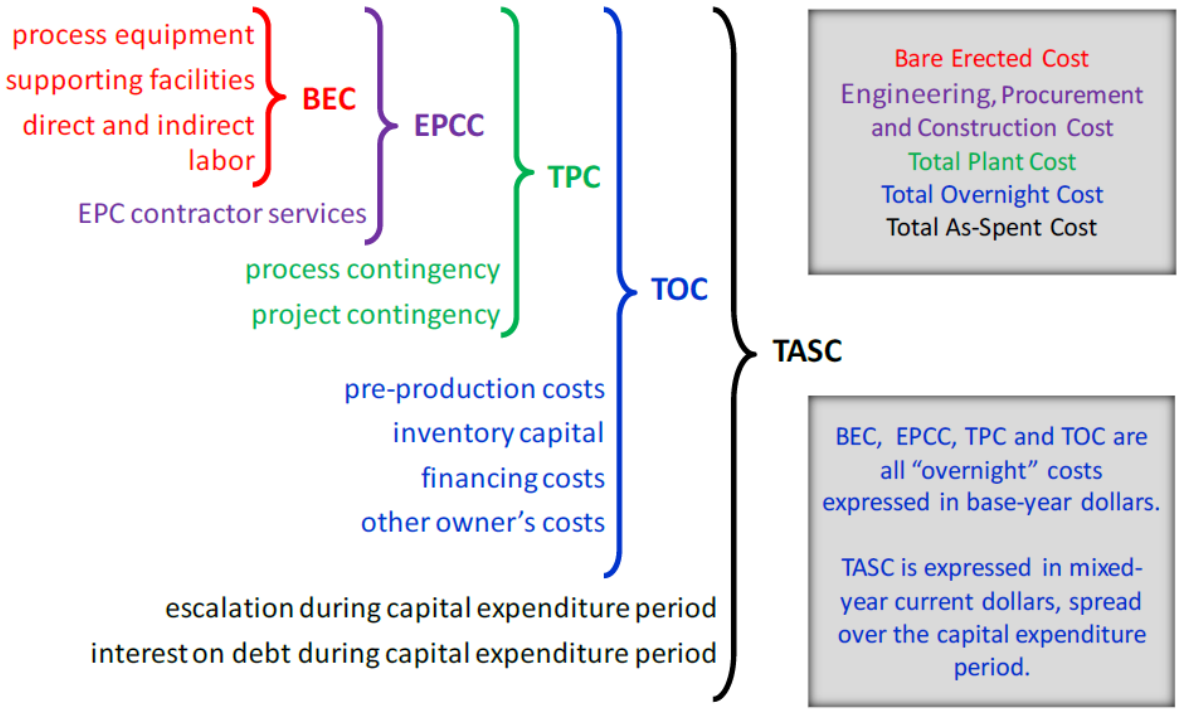

Figure 1-1: Capital Cost Levels and Their Elements [3]

The economic analysis assumptions are listed in Table 1-4. The economic assumptions were taken from three sources: 1) NETL Cost Estimation Methodology [3], 2) Cost and Performance Baseline for Fossil Energy Plants Volume 1: Bituminous Coal and Natural Gas to Electricity – Revision 2a, DOE – NETL report [5], and 3) FuelCell Energy's Statement of Project Objectives for the project. A primary goal was to develop the cost estimates on an equal basis to those reported in the referenced Baseline Bituminous Coal report [2, 5], allowing for a fair and accurate comparison between the cases.

Table 1-4. Economic Analysis Assumptions

Parameter	Value	Basis (see notes)
Levelized-Cost of Process Make-up Water, $/1000 lbs	0.20	5
Levelized Cost of Solid-Waste Disposal, $/ton	25.11	5
Levelized Cost of CO_2 Transportation, Storage, & Monitoring, $/ton CO_2	11.5	5
Plant On-Stream (Capacity) Factor, days/y (%)	310.25 (85%)	1, 2, 3
Natural Gas Price, $/MMBtu	6.13	5
Coal Price, $/Ton	68.60	5
Plant Location	Generic site, Mid-west	1, 2, 3
Dollar-Year Reporting Basis	2011	5
Total Fixed O&M Levelized-Costs, $/calendar day	995	1

Parameter	Value	Basis (see notes)
Maintenance-Material Costs (% of initial equip cost)	2	1, 2, 3, 5
Capital Expenditure Period	5 years	2, 3, 5
Capital Charge Factor, %/yr	12.43 (IOU, high-risk)	2, 3, 4
Levelization Factor (IOU @ 12% IRROE)	1.268	2, 3
TASC/TOC Multiplier	1.140 (IOU, high-risk)	2, 3, 4

1) FCE Project SOPO

2) NETL Cost Estimation Methodology (DOE/NETL-2011/1455) [3]

3) Cost and Performance Baseline for Fossil Energy Plants Volume 1: Bituminous Coal and Natural Gas to Electricity – Revision 2, 2010 (DOE/NETL-2010/1397) [2]

4) Cost and Performance Baseline for Fossil Energy Plants Volume 1: Bituminous Coal and Natural Gas to Electricity – Revision 2a, 2013 (DOE/NETL-2010/1397) [5]

5) Updated Costs (June 2011 Basis) for Selected Bituminous Baseline Cases, August 2012 (DOE/NETL 341/082312) [6]

1.1.2 Overall Process

This section describes the overall process for an ECM-based CEPACS system to process the flue gas from a 550 MW pulverized coal fired Rankine cycle plant. The design for the supercritical PC plant given in “Case 11” of the DOE - NETL report [5] was used as the reference. A simplified block flow diagram of the CEPACS system is shown in Figure 1-2. Detailed system modeling was performed using CHEMCAD process simulation software. Process design, development of a process flow diagram, and heat and material balances were completed using process simulation software, although are not included in this report as the information is proprietary to FCE. Descriptions and key features of major subsystems are presented in the following section.

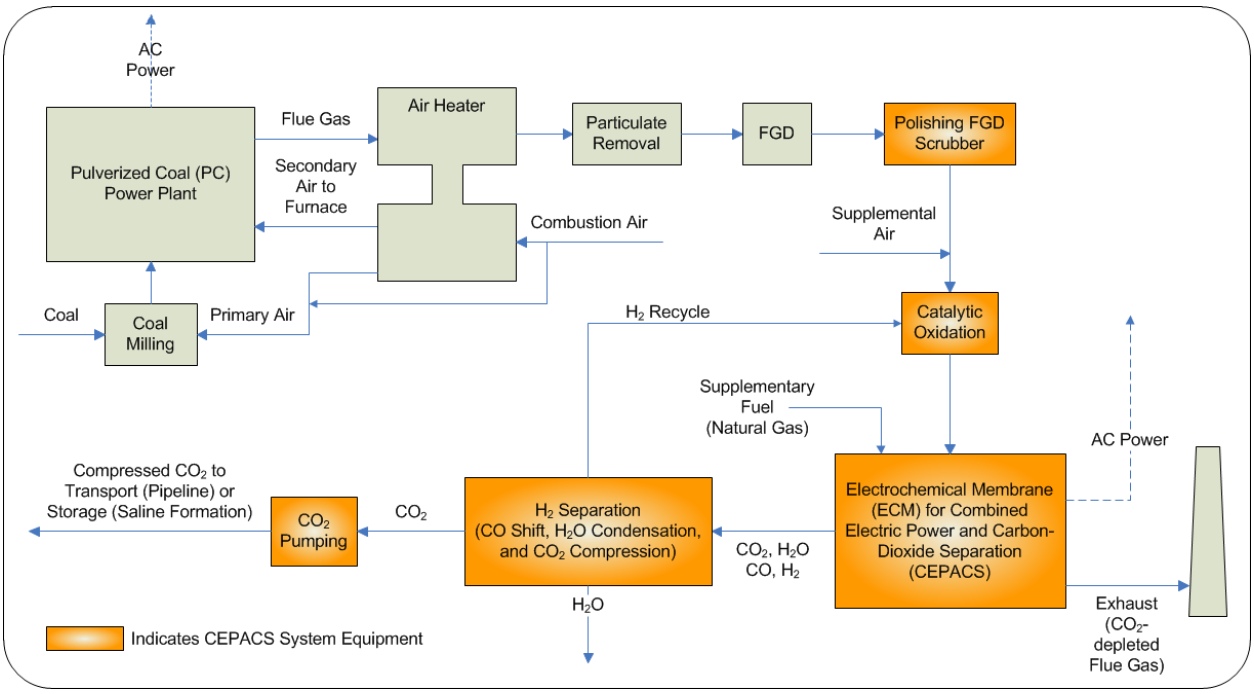

Figure 1-2: Block Flow Diagram of CEPACS System Applied to a 550 MW Pulverized Coal Plant

1.1.3 Major Subsystems

1.1.3.1 Flue Gas Processing Sub-System

Flue Gas Clean-up: The flue gas in the 550 MW PC Power Plant is filtered using a baghouse (part of the PC plant) to remove ash and particulates. Based on discussions with one vendor it is possible to achieve up to 99.999% removal of particulate matter in a bag house filter. However, the maximum achievable removal efficiency will depend on the site-specific characteristics of the particulate matter. The stream is then processed in a wet limestone scrubber, referred to as the Flue Gas Desulfurization (FGD) unit (also part of the PC plant), to reduce the SO_x (Sulfur) content to 42 ppm_v. The flue gas exiting the PC plant requires further sulfur removal to the level of <0.4 ppm_v total sulfur to make it suitable for feed to the ECM stacks in the CEPACS plant. The additional desulfurization is performed by the Polishing FGD scrubber. A Raw Flue Gas Blower is located upstream of the Polishing FGD to boost the pressure of the flue gas and facilitate its flow through the scrubber unit.

The polishing FGD is a wet scrubber with a design SO_2 removal of >99%. In a wet FGD system, flue gas enters the absorber and is sprayed with wet slurry. SO_2 in the flue gas is absorbed into the sprayed slurry, which is then collected in the reaction tank. In the reaction tank, the absorbed SO_2 combines with an alkaline reagent of limestone to produce gypsum. In order to maintain the pH in the reaction tank, limestone is continuously fed to the tank. The slurry that is collected in the reaction tank is recycled to the spray levels via recycle pumps. A bleed stream of slurry is removed from the reaction tank to control density. Oxidation air is produced by the oxidation air blowers (two operating and one standby) and supplied to the absorber via lances installed in the absorber. The oxidation air blowers are equipped with inlet butterfly dampers which make it possible to adjust the flow. The air from the oxidation air blowers is cooled by water to avoid plugging of the oxidation air lances. The bleed slurry is sent to a dewatering system where the solids are directed to the same location as the gypsum produced in the primary FGD. The "cleaned" flue gas passes through a mist eliminator (ME), which removes large slurry droplets entrained in the gas stream, before entering the Flue Gas Blower.

In order to achieve >99% SO_2 removal in a scrubber, the latest design technologies within the absorber tower are employed, including a dense, overlapping spray header/nozzle design, double hollow cone spray nozzles, wall baffles to prevent gas sneak-age and sieve trays. Several commercial installations are currently demonstrating this level of performance including Gorgas and Hammond (both owned by Southern Company).

The power consumption for the system is estimated to be 4,500 kVA, based on the following assumptions:

- Limestone feed system not included (assuming limestone is fed from primary FGD system)
- Process water pumps included
- Instrument air compressor included
- Gypsum dewatering not included (assuming gypsum is transferred to same location as the primary FGD – polishing system adds very small quantities relative to bulk scrubber)
- Oxidation air blowers included

The water consumption is estimated to be 500 gpm, based on the following assumptions:

- No quenching of oxidation air required
- Limestone feed water included (assuming 30wt% limestone slurry)
- Water consumption for gypsum dewatering not included – assuming water consumption for the system is included in primary FGD system design
- ME wash included
- There is no evaporation in the polishing FGD since it is located downstream of primary FGD

and the flue gas leaving the primary FGD is saturated with water.

The water discharge from the absorber is assumed to be the same as the water consumption. Since there is no evaporation (due to flue gas saturation), all water added to the absorber is discharged. Most of the water will leave the absorber with the gypsum slurry and the water will therefore be discharged where the gypsum is dewatered.

The polishing FGD also removes other contaminants, such as chlorine, mercury and selenium, present in the PC plant flue gas.

Pre-heating (Heat Exchangers, Catalytic Oxidizer) and Supplemental Air Introduction: The clean flue gas is heated by passing the stream through the Flue Gas Heater which uses the hot cathode exhaust gas from the ECM stacks as the heat source. The Flue Gas Heater is a seam-welded, parallel plate heat unit integrated with other heat exchangers (Fuel Preheater, Boiler in the CEPACS plant), forming a series arrangement of three seam-welded parallel plate heat exchangers using a single pass of hot cathode exhaust gas.

The PC plant flue gas is lean in oxygen. As oxygen from the flue gas is also used as a reactant at ECM cathodes (in the CO_2 capture process), supplemental air is added to the clean flue gas for proper operation of the ECM stacks downstream. The supplemental air is preheated to over 900°F (482°C) before it is blended into the hot flue gas. The hot anode exhaust gas from the ECM stacks provides the preheat. Some of the heat generated by the Low Temperature Shift Converter (LTSC) is also utilized for preheating of the supplemental air. This is described separately under the CO_2 Post-processing section (Sec 1.1.3.3).

Further preheating of the air-supplemented clean flue gas is carried out in the catalytic oxidizer. Most of the H_2 recycle stream (in the CEPACS plant) is directed to the oxidizer to provide the combustion heat (from exothermic catalytic oxidation) required for the preheating of the flue gas. About 68% of the hydrogen-containing stream remaining after liquefying and separating out CO_2 from the CO_2-rich anode exhaust (ECM) gas is utilized for this purpose. The H_2 recycle stream also contains CO_2 which helps to boost the CO_2 concentration of the flue gas for improved ECM performance. Some flue gas is bypassed around the oxidizer to minimize the size of the parallel oxidizer beds while achieving the maximum exit temperature. The effluent stream from the oxidizer (after the bypass) – clean, air-supplemented, pre-heated flue gas - is now at the required temperature and suitable for feed to the ECM cathodes. During start-up of the plant, a duct burner fed with NG fuel and located upstream of the catalytic oxidizer is used to provide the heat needed.

1.1.3.2 ECM Stacks (for CO_2 Separation)

ECM Enclosures: The CEPACS system for separating CO_2 from the flue gas of a 550 MW PC power plant employs 1,664 ECM stacks divided into 8 sections. For large-scale applications of the CEPACS system, grouping the stacks into large enclosures reduces the overall capital costs by reducing the number of module enclosures and their associated piping, facilitates the replacement of individual stacks (compared to replacing complete modules) and provides economies of scale.

In each section, 208 ECM stacks are located in an enclosure. The enclosure is 70’ wide, 178’ long and 50’ high, sitting on a concrete pad 108’ wide and 181’ long. A plan view of the enclosure is shown in Figure 1-3. The ECM stacks are located in 8 rows with 26 ECM stacks per row. The ECM stacks are supported in the enclosure on concrete and stainless steel supports. The enclosure has concrete walls and steel trusses mounted above the ECM stacks. Thermal insulation supported by the trusses, and on the walls and lower floor of the enclosure, completely surrounds the 208 stacks. A cross section of the enclosure is shown in Figure 1-4.

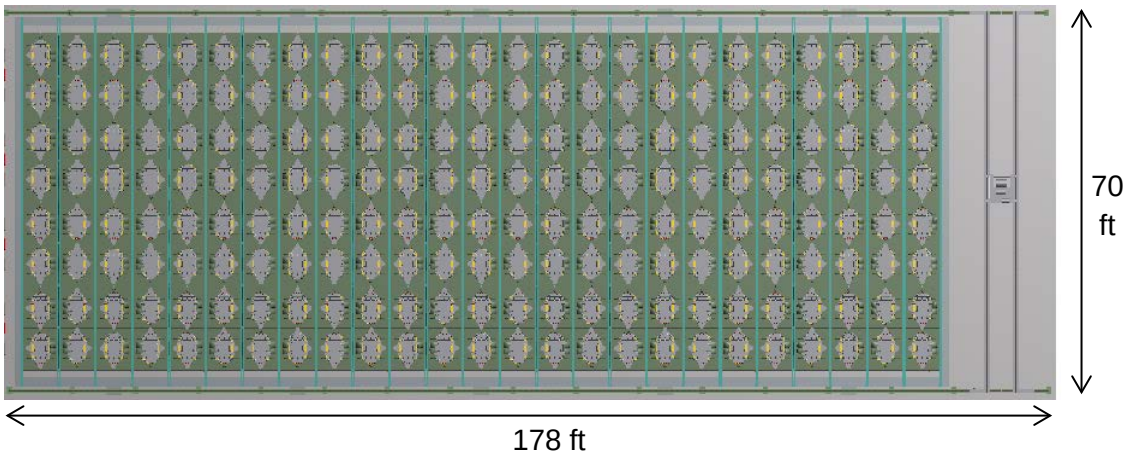

Figure 1-3. Plan View of a 208-Stack ECM Enclosure

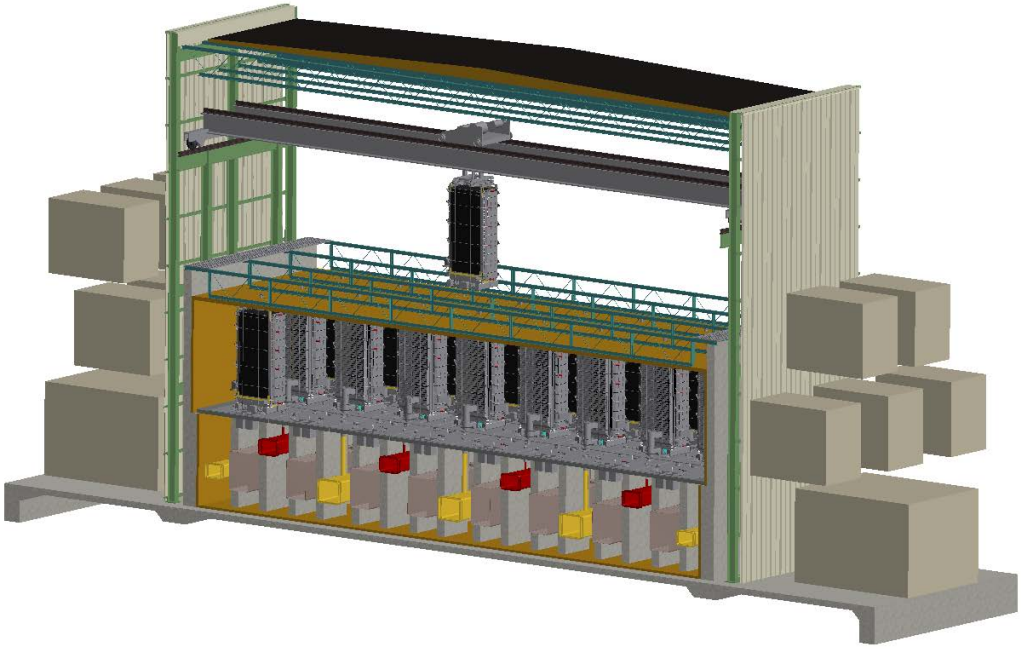

Figure 1-4. Cross-section of an ECM enclosure with stack being installed and power equipment external to the enclosure

A region in the lower part of the building is open for PC plant flue gas and air to enter the building and distribute upward to each of the ECM stack cathodes. The cathode exhaust is collected in eight 30” x 50” ducts, located below the ECM stacks, and flows to the end of the enclosure where it is collected and flows to fuel superheaters located outside the enclosure. Fuel gas from the superheaters enters the enclosure and is distributed in four 26”x 18” ducts in the lower part of the enclosure. The fuel gas flows upward from the ducts, in distributor tubes, to the ECM stack anodes. The CO_2-rich anode exhaust gas, carrying the CO_2 separated from the ECM cathodes, exits the ECM stacks and flows downward in collector tubes to two 24” x 17” ducts and three 32” x 28” ducts located in the lower part of the enclosure. The anode exhaust gas flows in the five

ducts to the end of the enclosure where it is collected and routed outside the enclosure. The ducting for gas distribution in the enclosure is made from 316SS, and has expansion joints to accommodate thermal expansion.

The space above the trusses is a cool region. Bus-bars that transfer the DC current from the ECM stacks to the power conditioning equipment are located in this cool region. The power conditioning choppers and inverters are located outside and adjacent to the enclosure. Access to each of the ECM stacks is provided by removable sections of the upper insulation. A traveling crane is located in the building for placement of and access to each of the ECM stacks. The enclosure has sheet metal siding and sheet metal roofing supported on roof trusses.

CEPACS Plant Layout: The layout of the CEPACS system was designed to minimize capital costs. Specifically, the "hot" balance-of-plant equipment was de-centralized into 8 separate sections with one section located proximate to each of the 8 ECM enclosures as shown in Figure 1-5. These "hot" sections comprise such major BOP equipment as the flue gas blower, the flue gas heater, the boiler, the fuel preheater, the air blower, the air preheater, the duct burner and oxidizers, the anode exhaust cooler and the low-temperature shift converter. This modular design minimizes the lengths of "hot" piping and the quantities of fittings, significantly reducing capital costs while simplifying the sparing of parts and potentially increasing the capacity factor.

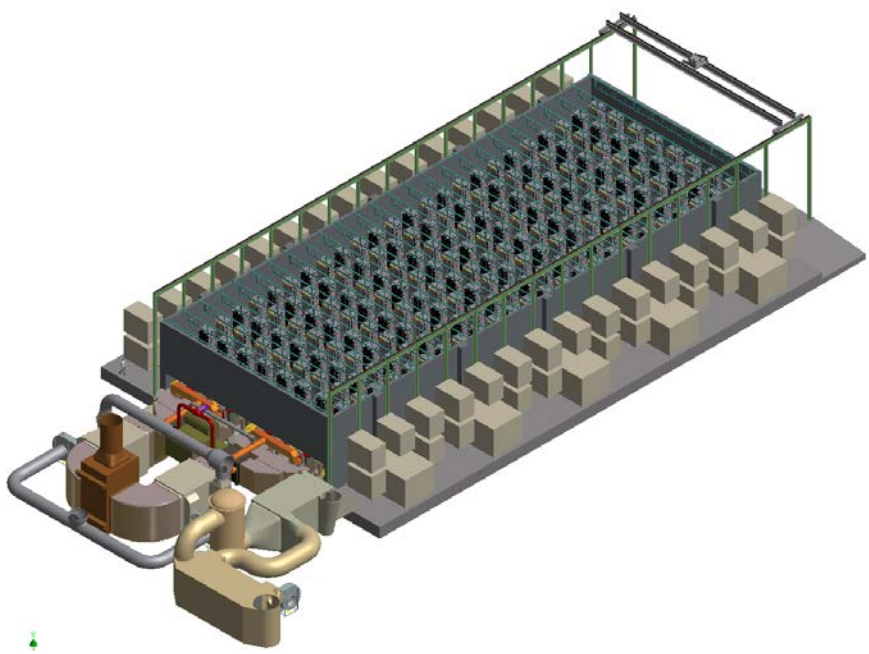

Figure 1-5. General Arrangement of an ECM enclosure and associated "hot" BOP equipment

The general arrangement of the ECM enclosures and associated "hot" BOP equipment is shown in Figure 1-6, along with the piping for the distribution of coal plant flue gas to the 8 sections and collection of the CO_2-rich anode exhaust gas from the 8 sections. The remainder of the balance-of-plant equipment such as the compressors and chillers has been centralized and located in an area to the side of the 8 ECM enclosures and opposite to the FGD unit (not-shown). Including access ways and the centralized equipment, the CEPACS system sized for 90% CO_2 capture from a 550 MW PC plant is estimated to require ~10 acres.

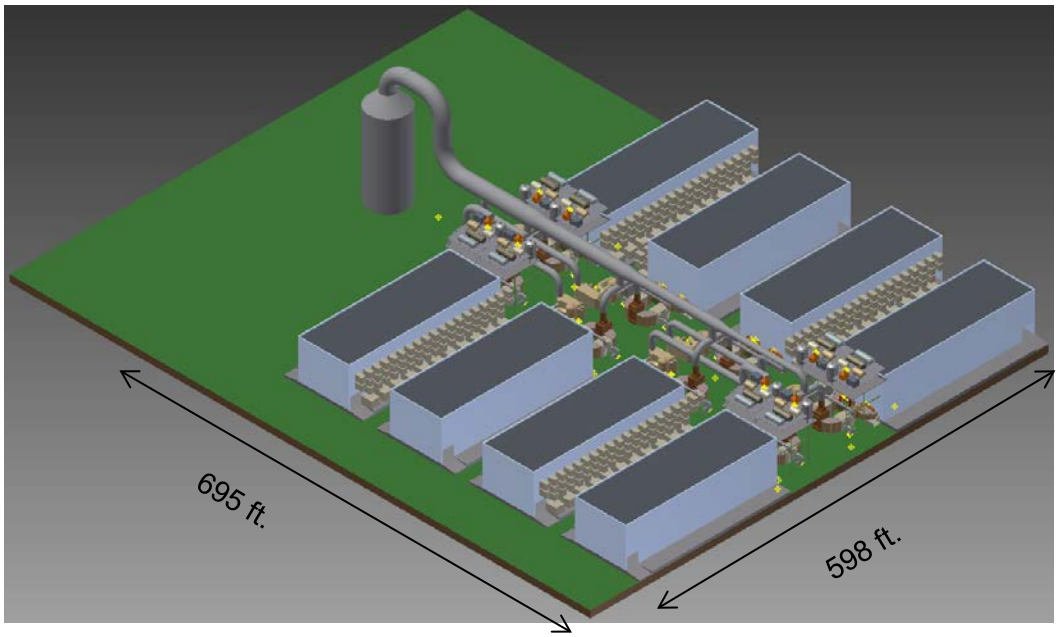

Figure 1-6. General Arrangement of ECM enclosures, BOP equipment and piping

DFC® Operational Experience: FuelCell Energy, Inc. is a global leader in the design, manufacture, operation, and service of ultra-clean, efficient, and reliable megawatt-class stationary molten carbonate fuel cell power plants. FCE began manufacturing MCFC stacks at its production facility in Torrington, Connecticut in 2001. Since then, FCE has been expanding globally. Starting in 2007, through its partnership with POSCO Energy, FCE has been able to target markets in Southeast Asia, particularly South Korea. A European manufacturing, sales, and service presence was also established in 2012, with German-based FuelCell Energy Solutions, GmbH.

FCE's MCFC-based products are trademarked as Direct FuelCell® (DFC®) because of their capabilities for direct internal reforming of methane and other hydrocarbons. FCE has three commercial DFC® power plant products: DFC300 (300 kW), DFC1500 (1.4 MW), and DFC3000® (2.8 MW), as shown in Figure 1-7. FCE's DFC® power plants have been installed in more than 50 locations, throughout 9 countries, and have generated over 2.4 billion kilowatt hours of electricity.

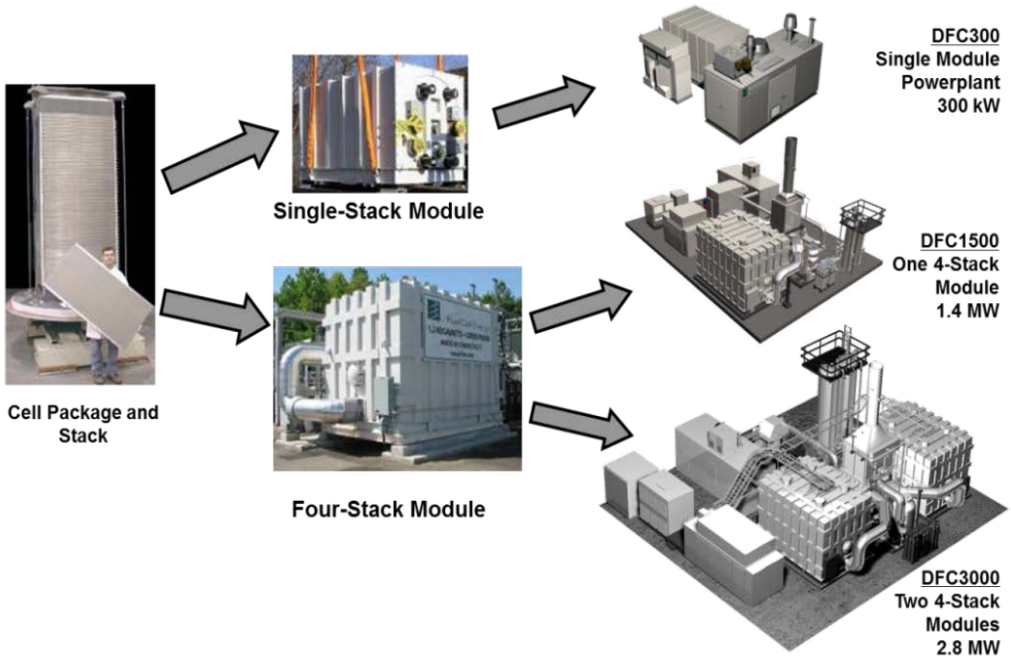

Figure 1-7. Direct FuelCell® commercial power plant products

The DFC® power plants are fuel flexible and can operate using a range of fuels from natural gas (NG) to renewable biogas (Anaerobic Digester Gas, ADG). DFC® field installations include 14.9 MW of total capacity in Bridgeport, Connecticut, and 59 MW of total capacity in Hwasung City, South Korea, representing the largest fuel cell power plants in North America and the world, respectively. Figure 1-8 shows the pictures of these two power plants.

- The installation in Bridgeport, CT comprises five DFC3000® plants and is owned by Dominion, a leading electric utility company. The electricity generated will be sold under a 15-year purchase agreement to Connecticut Light and Power. This facility, shown in Figure 1-8 (left), was fully designed and constructed in 12 months.
- The 59 MW facility in South Korea, shown in Figure 1-8 (right) was completed in 13 months and comprises 21 DFC3000® plants.

Figure 1-8. (left) 14.9 MW Bridgeport, CT facility; and (right) 59 MW Hwasung City, South Korea facility

The DFC® power plants are comprised of 401-cell stacks. The sub-MW power plant (DFC300), has a single-stack module, while the MW-class power plants (DFC1500 and DFC3000®) utilize modules containing 4 stacks each. The stacks operate at an average temperature of 650°C, which enables the cathode exhaust to be used for co-generation heat recovery. A schematic of a cell (including anode, electrolyte matrix, cathode and Interconnect) is shown in Figure 1-9. No barrier layer is used in DFC®. Fuel and air flow paths in DFC® are in a cross-flow configuration. The ECM cell and stack technology is identical to the DFC® design. The naming convention (ECM vs. DFC®) simply indicates re-application of the technology in the CEPACS system for carbon capture from flue gases.

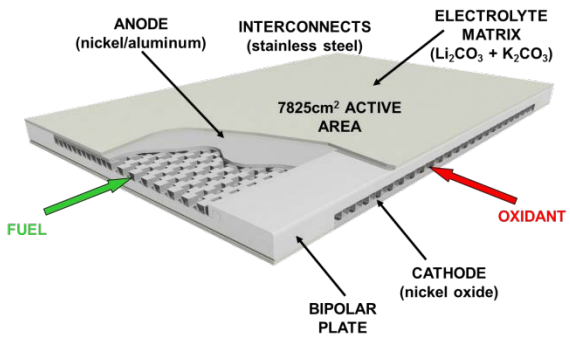

Figure 1-9. Cell Design and Materials

As of 2014, a fleet of over 100 DFC300, DFC1500, and DFC3000® units has been deployed and is operational. DFC3000® fleet availability for the twelve months ending in March 2014 exceeded 95%.

FCE has been continuously working to reduce the product capital cost. In the past decade, the cost per kW has decreased by nearly 75% to around $2,400 / kW as shown in Figure 1-10. Further reduction in cost is expected with increased global production volume and product enhancement. The annual production capacity reached 100 MW in North America by the end of 2013.

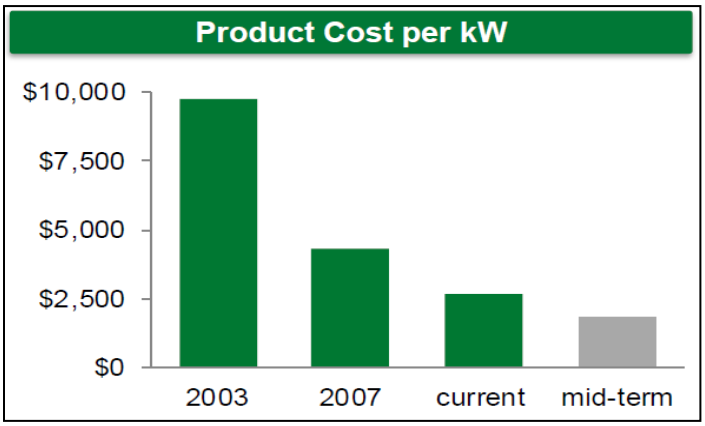

Figure 1-10. Product Cost Reduction of DFC Power Plants at Low/Moderate Production Volume

The global manufacturing facilities in place have the capacity to exceed 210 MW of annual production. Manufacturing in Asia is performed by POSCO Energy at a manufacturing facility in Pohang, South Korea under a licensing agreement with FCE. This facility is configured with initial capability for an annual production of 100 MW with the ability to ramp up to 200 MW in the future. Europe is served by a 20,000 ft^2 manufacturing facility in Ottobrun, Germany that has the capability to produce up to 20 MW per year of sub-MW DFC® power plants. This facility produced its first fuel cell stack in 2013. All of these facilities are shown in Figure 1-11, and cumulatively provide an ultimate annual production capacity of 320 MW.

Figure 1-11. Global Manufacturing Facilities with an Ultimate Annual Production Capacity of 320 MW

ECM Contaminant Tolerance Testing and Analysis: A comprehensive contaminant evaluation study was performed (under a separate DOE program DE-FE0007634) to address possible interactions of the impurities that may be present in flue gas, with ECM cell, which could result in reduced performance. Pacific Northwest National Laboratory performed the analysis and testing using ECM cells provided by FCE. Four main flue gas impurities were considered – sulfur, chlorine, mercury and selenium. The study included thermochemical modeling to predict the possible impurity-membrane interactions, and bench-scale experimental work to assess the extent of the interactions, if any. Prevalent forms of S, Cl, Hg, and Se which can be present in flue gas were identified and included in the evaluation tests. Effect of these contaminants on ECM cell performance and endurance was studied. Based on the experimental results, contaminant tolerance levels for the ECM were identified. The contaminant levels expected from the flue gas clean-up (polishing FGD) subsystem were estimated and compared with the ECM tolerance levels. Table 1-5 provides a summary of the comparison. The contaminant (effect) evaluation and comparison with CEPACS plant flue gas polishing system output showed that the ECM tolerance levels were well above the contaminant levels expected in the ECM cathode feed gas (treated flue gas). Also the testing showed that CO_2 flux (carbon capture rate) remained constant during the tests.

Table 1-5. Expected System (Flue gas) Contaminant Levels Compared with Test Experience

Contam-inant	Concentration in Cathode Inlet Gas After Polishing FGD, Estimated by AECOM		Highest Concentration Tested by PNNL with low/no power degradation		Notes
SO_2	0.18	ppm_v	1	ppm_v	Performance losses due to short-term SO_2 exposure up to 40 ppm were fully reversible
Se	0.30	ppb_v	10	ppb_v	No apparent degradation over 860 h
Hg	0.08	ppb_v	250	ppb_v	Expected form is predominantly elemental Hg. No apparent degradation over 1100 h
HCl	12.7	ppb_v	200	ppb_v	No apparent degradation over 915 h.

ECM Performance Testing and Analysis: In conventional power generation applications, the carbonate fuel cells are operated at high power level and ~70% of the CO_2 in the cathode stream is transferred to the anode side. Carbonate fuel cell performance is influenced by the partial pressures of the CO_2 and O_2 (reactants) in the feed stream and utilization levels of the reactants (e.g. % of the CO_2 in the cathode stream that is transferred through the membrane to the anode side) in the cell. For CO_2 separation application, the reactant conditions in the cell result in slightly lower electrochemical performance because of the higher than normal utilization required to achieve greater than 90% CO_2 capture.

ECM single-cell testing (operation in a CO_2 transfer mode) using simulated flue gas was conducted (under a separate DOE program DE-FE007634) to verify ECM performance. Parametric testing was performed to evaluate the effects of auxiliary air flow (air supplementation of flue gas), cathode water concentration, current density, carbon dioxide transfer rate, fuel utilization, and cell temperature. Testing determined that the optimal cell performance is achieved with an auxiliary air flow that results in an 8.25-8.5% oxygen concentration in flue gas, with a water concentration of ~12.5%. The optimal system efficiency, determined through a combination of single-cell testing and system simulations, is achieved when operating at a fuel utilization of 75%, a carbon dioxide utilization of 92.5%, and a carbon dioxide flux of 128 scc/s/m^2. The carbon dioxide utilization is defined as the percentage of CO_2 transferred (to the anode side) as the stream passes through the cathode of the cell. Cell voltage was measured as a function of the CO_2 transfer rate (or flux) for a carbon dioxide utilization of 92.5%. At the design condition of 128 cc/s/m^2, the cell voltage is 739 mV.

Bench-scale demonstration of the ECM-based CEPACS system was also conducted in FCE's Danbury, CT test facility (under previous DOE project DE-FE007634). The testing utilized FCE's ECM stack containing 14 full-area cells, providing a total membrane area of 11.7 m^2. The cell packages were manufactured in FCE's commercial production facility located in Torrington, CT. The testing was performed using simulated flue gas (ECM cathode side). The test facility included a CEPACS system skid for post-processing the anode exhaust stream to produce high-purity CO_2 product. The testing included 9 months of steady-state testing, in addition to the parametric and optimization tests. The total test period of 15,715 h highlighted 100 tons/year CO_2 capture capability and 10 kW peak power production. The CO_2 flux remained constant at 116 cc/s/m^2

during the steady state testing. Capability of the ECM stack for operation at 20% higher CO_2 flux (139 cc/s/m^2) was also verified in the parametric tests. Average cell voltage based on test results as a function of the CO_2 transfer rate (or flux) for a carbon dioxide utilization range of 50 to 92% is shown in Figure 1-12. At the design condition of 128 scc/s/m², the cell voltage is ~725 mV. Adjusting for cell performance degradation, this cell voltage is equivalent to 730 mV, which was used as the basis for the design of the CEPACS system.

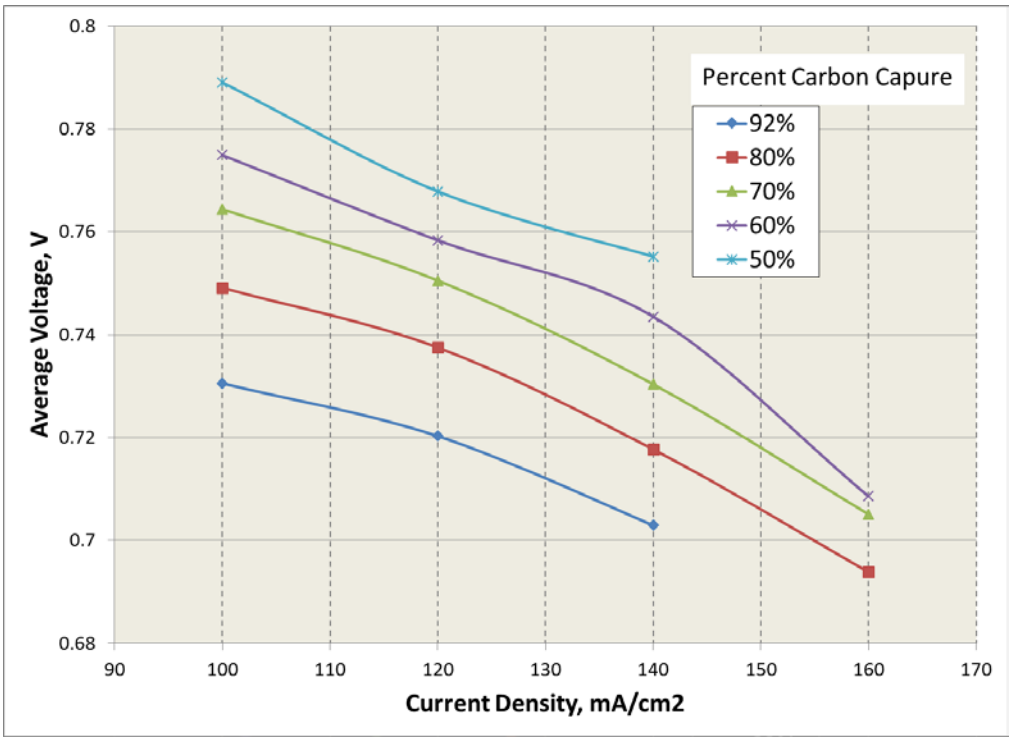

Figure 1-12. ECM Performance Based on Bench-scale Testing

1.1.3.3 CO2 Product Post-processing

Water Gas Shift (Low Temperature Shift Converter) and Water Removal (Cooler, Condenser): The anode gas exiting the ECM stacks is CO_2–rich and also contains unused fuel (mostly H_2 and some CO) and product water vapor. It is processed in a Low Temperature Shift Converter (LTSC) to maximize its CO_2 content prior to CO_2 capture steps. Prior to processing in LTSC, the stream is cooled to provide preheat to the supplemental air stream (as mentioned earlier). After additional cooling by water injection (condensate recycled within the CEPACS plant), the gas is now at the desired temperature to maximize CO shift and is fed to the LTSC where most of the CO is shifted to CO_2, consuming water and generating additional hydrogen (required for its exothermic heat at the oxidizer and recycle to the anode).

The shifted anode gas (from LTSC) is then processed to remove most of the water prior to CO_2 capture steps. The gas is cooled in the Air Preheater to provide pre-heat to the supplemental air. Some of the heat generated by the exothermic shift reaction is utilized here for air pre-heating (as mentioned earlier). The shifted gas is cooled further in the CO_2 (product liquid) Reheater and in the Condenser (using cooling water). This provides substantial condensation and water removal prior to the compression stages employed for CO_2 capture (described separately below).

Compression and CO_2 Liquefaction: The cooled, shifted anode gas stream contains about 79% CO_2, 17% H_2, and 2.4% H_2O upon exiting the Water Separator. It is then chilled and compressed in a series of stages to reduce its water content and liquefy CO_2. Pre- and interstage-cooling, using cooling water and chilled refrigerant, is used to further condense and remove water as well as reducing the power consumption of the compressors. The Stage 1 and 2 Chillers provide two levels of refrigeration. The initial stage provides moderate cooling and the last stage cools to lower temperature to liquefy the CO_2. The existing PC Plant cooling tower water loop provides 60°F (16°C) water to each compression stage pre-cooler and the chiller units (condenser heat loads). The final stage results in a stream that allows for a flash separation of near pure CO_2.

The CO_2-rich anode gas stream is compressed using a two-stage, intercooled compressor suitable for hydrogen environments. Such compressors are commercially available and are used in a wide range of industrial applications, including: industrial gases, petrochemicals, hydrocarbons, power generation, furnace gas recovery (FGR), ammonia, etc. Many large, globally-known OEMs such as Siemens, GE Oil & Gas, MAN Diesel & Turbo, Elliott Group (Ebara Corporation) and Dresser-Rand manufacture a wide range of state-of-the-art compressors spanning the operating conditions of the CEPACS system. These compressors are typically either multi-stage centrifugal compressors, or two-stage axial / centrifugal compressor systems. All of these compressors are available with electric motors and variable speed drives.

Product Carbon Dioxide Delivery: High purity CO_2 is flashed as a liquid from the refrigerated and compressed anode gas stream. The off-gas (after the flash operation) containing mostly H_2 and CO_2 is recycled back to the catalytic oxidizer and ECM stack. The separation of CO_2 (as supercritical fluid) represents over 92% capture of the carbon input to the CEPACS system. The CO_2 liquid is continuously pumped to 2215 psia (15.3 MPa abs) and heated to the required product stream temperature.

1.1.3.4 Supplemental Fuel Processing Sub-system

The CEPACS system for the CO_2 capture from the 550 MW PC plant flue gas utilizes pipeline natural gas as a supplemental fuel. The natural gas is delivered at a relatively low pressure of about 6 psig (145 kPa abs), as the ECM stacks operate at near atmospheric pressure. As it contains ~3 ppm_v of total sulfur compounds, the natural gas is desulfurized in a two bed subsystem featuring lead/lag arrangement flexibility. The natural gas flow is redirected to the second bed after about 9000 hrs. The sorbent in the first bed is replaced and it becomes the second bed in the series flow configuration to guard against preliminary sulfur break-through. Each of the two vessels is about 10 ft (3.05 m) in diameter and 20 ft (6.1 m) high.

The desulfurized natural gas is then mixed with steam which is provided from a low pressure boiler. The water is supplied with water recovered within the CEPACS plant. The humidified natural gas then passes through a fuel preheater which raises its temperature to about 700 °F (371 °C). The fuel preheater and the boiler heat duties are provided by the CO_2-depleted stream leaving the ECM cathodes (as it contains the waste heat generated in the ECM stacks). Before distribution to the 8 ECM stack enclosures (containing 208 stacks each), the humidified natural gas is mixed with a hydrogen recycle stream. About 29% of the hydrogen-containing stream remaining after liquefying and separating out CO_2 from the CO_2-rich ECM anode exhaust gas is recycled back to the ECM anodes. The mixed fuel stream to the ECM cell stacks contains ~17% hydrogen. The recycle of hydrogen results in an overall fuel utilization in the cells of 89.3%, which serves to reduce the natural gas fuel consumption.

1.1.3.5 Water Sub-systems

Process Water (Water Recovery and Recycle within the CEPACS system): This water category refers to high quality water generated and consumed within the CEPACS plant. The anode

exhaust gas from the ECM stacks contains about 38% water vapor as water is generated as a product of the electrochemical reactions occurring in the stacks. A small fraction is consumed in the water gas shift reaction. The remaining water is condensed and separated from the anode stream after the Condenser and the initial Chiller stages. All condensate is collected in a central tank. Some of this water is used for quenching the anode exhaust stream (from the ECM stacks) upstream of LTSC (as mentioned earlier). About 54% (by mass) of the condensate water is pumped to the CEPACS Boiler to generate steam required for ECM fuel feed. The remaining condensate flow is net excess process water generated by the CEPACS system and is provided to the PC plant for process requirements.

Cooling Water (Addition to PC Plant Cooling Tower): This water category refers to a portion of the PC Plant Cooling tower water which is circulated through the CEPACS heat exchangers, and does not contact the process gas. This is treated water and normal cooling tower losses are assumed. Supply water is fed at 60°F (16°C) and returned at ≤80°F (27°C). Two cooling water loops are provided. One loop supplies water to the Condenser and pre-coolers upstream of the chiller units and requires about 50% of the total cooling water (used for CEPACS). The balance at about 50% of the water is supplied to the Chiller units.

1.1.3.6 Electrical Sub-systems

The CEPACS system for the 550 MW coal plant includes two electrical subsystems: a Power Generation subsystem and an Auxiliary Power subsystem. The Power Generation subsystem includes the 1,664 ECM stacks that generate DC power in the process of separating CO_2 from the coal plant flue gas. The plant is divided into eight (8) sections. Each ECM enclosure containing 208 stacks and the associated balance of plant components constitutes a section. The electrical 1-line diagram is shown in Figure 1-13. Within each section, the 208 ECM stacks are arranged electrically in 13 groups of 16 stacks each. Each group includes 4 sub-groups of four stacks each. The stacks within a sub-group are electrically connected in series and grounded in center (two stacks on each side of ground connection). Each sub-group is connected to a 400 Hz square wave chopper, high frequency transformer and rectifier. The output of 4 sub-groups (16 ECM stacks total) is combined and flows to an inverter that converts the power to 3-phase 60 Hz at 4.16 kV. The inverted output from each group pair (32 ECM stacks total except groups 11 and 12 which are combined with group 13) is combined and transformed to 54 kV and fed to the section bus. The 54 kV output from each section is combined and transformed to 345 kV before directing it to the main switch yard. The final result is the CEPACS 319 MVA AC output.

The Auxiliary Power subsystem takes power from the coal plant's 345 kV switchyard. The electrical 1-line diagram is shown in Figure 1-14. A 100 MVA transformer delivers 3-phase 60 Hz power at 54 kV. Auxiliary power for each of the 8 sections, as well as the central balance-of-plant equipment, is transformed to 4.16 KV required to operate the compressors, blowers, pumps, and flue gas desulfurizer. Power is further transformed to 460 V for smaller pumps, the chillers and the system controls and auxiliary loads. Power is also delivered at 3-phase 60 Hz 208V and 1-phase 60 Hz 120V for various single phase loads.

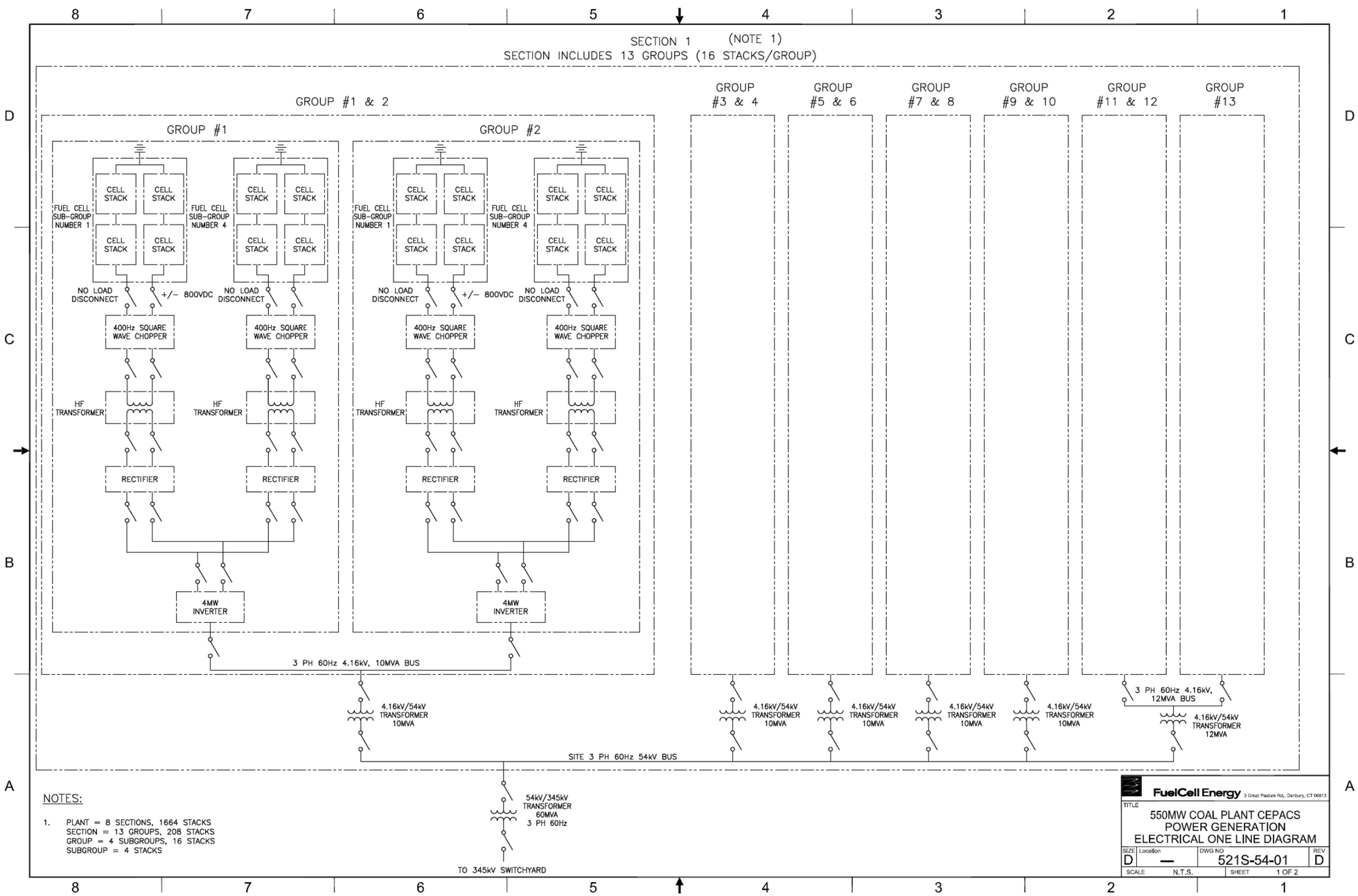

Figure 1-13. Electrical One-line Diagram for Power Generation Subsystem (CEPACS)

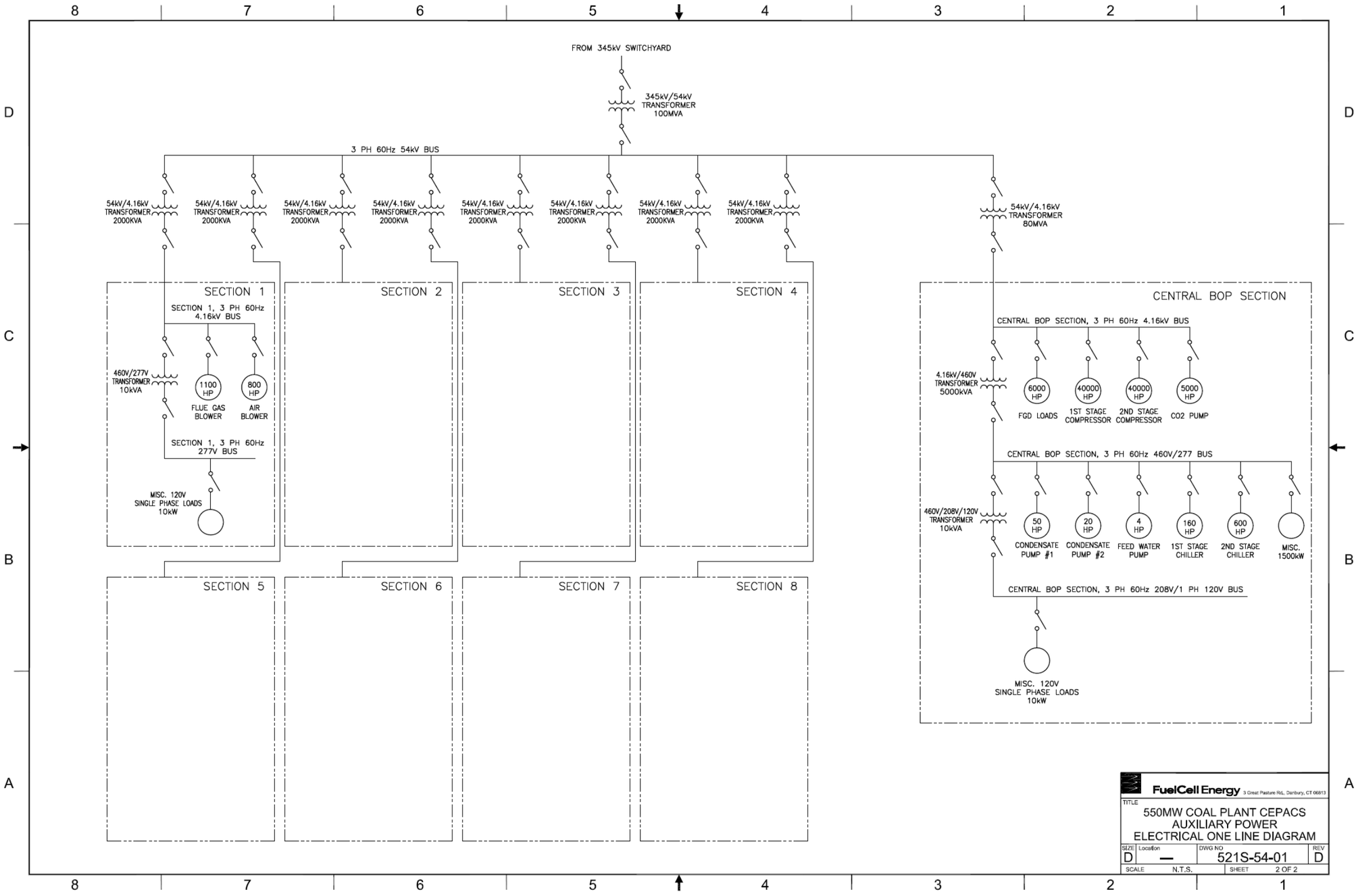

Figure 1-14. Electrical One-line Diagram for Auxiliary Power Subsystem (CEPACS)

1.1.4 Equipment List

The equipment list for the CEPCAS system designed for integration with a 550 MW PC plant is shown in Table 1-6. Information such as equipment description and type, design conditions, and operating unit and spare counts was developed.

The CEPACS plant consists of 1664 ECM Stacks which are arranged in 8 sections of 208 stacks each. A “hot” balance-of-plant train services each section, for a total of 8 “hot” BOP trains. These “hot” sections comprise such major BOP equipment as the flue gas blower, the flue gas heater, the boiler, the fuel preheater, the air blower, the air preheater, the duct burner and oxidizers, the anode exhaust cooler and the low-temperature shift converter. This approach was chosen based on available equipment capacities and also to limit the gas ducting sizes. The remainder of the balance-of-plant equipment such as the compressors and chillers have been centralized and located in a centralized area. A plot plan for the ECM stack sections was prepared (presented in Section 1.1.3.2 of this report) to facilitate the economic analysis.

Table 1-6. CEPACS System Equipment List for Application to a 550 MW PC Power Plant

Equipment Description	Equipment Tag #	Type	Total Operating Qty.	Capacity Related to Plant
Boiler	100-HX-102	Heat Exchanger, Tube-Fin	8	12.5%
Natural Gas Desulfurizer Vessel	200-RR-101/2	Vertical Bed	1	100%
Natural Gas Desulfurizer Sorbent	-	Pelletized	1	100%
Fuel Preheater	200-HX-104	Heat Exchanger, Seam welded Parallel Plate	16	6.25%
Electrochemical Membrane (ECM) Stack Enclosures	200-ECM-106	Molten carbonate -based planar, cross flow membrane	8	12.5%
Flue Gas Blower	300-BL-103	Blower, Centrifugal	16	6.25%
Flue Gas Heater	300-HX-105	Heat Exchanger, Seam welded Parallel Plate	16	6.25%
Start-up Duct Burner	300-HE-106	Duct Burner	8	12.5%
FG Oxidizer	300-RR-108A/B	Reactor	16	6.25%
Oxidizer Catalyst	-	Catalyst, Wash Coated Monolith	16	6.25%
Low-Temp. Shift Converter (LTSC)	400-RR-101	Reactor	8	12.5%
LTSC Catalyst	-	Catalyst, Pellet, Vertical Flow Bed	8	12.5%
Condenser	400-HX-109	Heat Exchanger, Tube-Fin	1	100%
Air Filter	500-FL-101	Replaceable elements	8	12.5%
Air Blower	500-BL-101	Blower, Centrifugal	8	12.5%
Anode Exit Cooler (Air Preheater II)	500-HX-101	Heat Exchanger, Seam welded Parallel Plate	8	12.5%
Air Preheater	500-HX-102	Heat Exchanger, Seam welded Parallel Plate	8	12.5%

Table 1-6. CEPACS System Equipment List for Application to a 550 MW PC Power Plant (continued)

Equipment Description	Equipment Tag #	Type	Total Operating Qty.	Capacity Related to Plant
Condensate Pump #1	100-PU-101	Pump, Centrifugal	1	100%
Condensate Pump #2	100-PU-102	Pump, Centrifugal	1	100%
Feedwater Pump	100-PU-103	Pump, Centrifugal	1	100%
Water Collection Tank	100-TK-106	Vessel, Vertical	1	100%
Raw Flue Gas Blower	300-BL-100	Blower, Centrifugal	1	100%
Polishing FGD	300-RR-101	Wet Absorber	1	100%
Chiller - Stage 1	400-HX-101	Heat Exchanger, Tube-Fin	1	100%
Inter-stage Precooler	400-HX-102	Heat Exchanger, Tube-Fin	1	100%
CO_2 Recycle Heater	400-HX-104	Heat Exchanger, Tube-Fin	1	100%
Chiller Precooler	400-HX-105	Heat Exchanger, Tube-Fin	1	100%
Chiller Inlet Cooler	400-HX-106	Heat Exchanger, Tube-Fin	1	100%
Chiller - Stage 2	400-HX-107	Heat Exchanger, Tube-Fin	1	100%
CO_2 Reheater	400-HX-108	Heat Exchanger, Tube-Fin	1	100%
Water Separator #1	400-SP-101	Vessel, Vertical	1	100%
Water Separator #2	400-SP-102	Vessel, Vertical	1	100%
Water Separator #3	400-SP-103	Vessel, Vertical	1	100%
1st Stage Compressor	400-CR-101	Compressor, Centrifugal	1	100%
2nd Stage Compressor	400-CR-102	Compressor, Centrifugal	1	100%
CO_2 Separator	400-SP-109	Vessel, Vertical	1	100%
CO_2 Pump	400-PU-120	Pump, Piston	1	100%

1.1.5 System Performance

1.1.5.1 Key System Assumptions

Assumptions made regarding the key operational and performance parameters for major subsystems or system components are listed in Table 1-7.

Table 1-7. Key System Assumptions

Case ID	1	2	3
Description	**Supercritical PC**	**Supercritical PC w/ CO_2 Capture (Amine)**	**Supercritical PC w/ CO_2 Capture (CEPACS)**
DOE/NETL-2010/1397 Case ID	11	12	--
Steam Cycle, MPa/°C/°C (psig/°F/°F)	24.1/593/593 (3500/1100 /1100)		
Coal	Illinois No. 6		
Condenser pressure, mm Hg (in Hg)	50.8 (2)		
Boiler Efficiency, %	88		
Cooling water to condensers, °C (ºF)	16 (60)		
Cooling water from condensers, °C (ºF)	27 (80)		
Stack temperature, °C (°F)	57 (135)	32 (89)	68 (154)
SO_2 Control	Wet Limestone, Forced Oxidation		
FGD Efficiency, % (A)	98	98 (B)	Bulk: 98 Polishing: 99 (C)
NOx Control	LNB w/OFA and SCR	LNB w/OFA and SCR	LNB w/OFA, SCR, and ECM
SCR Efficiency, % (A)	86	86	86
ECM NOx Removal Efficiency, %	--	--	70
Particulate Control	Fabric Filter	Fabric Filter	Fabric Filters
Fabric Filter efficiency, % (A)	99.8	99.8	99.8
Ash Distribution, Fly/Bottom	80% / 20%	80% / 20%	80% / 20%
Mercury Control	Co-benefit Capture	Co-benefit Capture	Co-benefit Capture
Mercury removal efficiency, % (A)	90	90	90
CO_2 Control	N/A	Econamine	ECM-based CEPACS
Overall CO_2 Capture (D)	N/A	90.2%	92.6%
CO_2 Sequestration	N/A	Off-site Saline Formation	Off-site Saline Formation

A. Removal efficiencies are based on the FG content

B. An SO_2 polishing step is included to meet more stringent SO_x content limits in the FG (< 10 ppm_v) to reduce formation of amine HSS (Heat Stable Salts) during the CO_2 absorption process. SO_2 exiting the post-FGD polishing step is absorbed in the CO_2 capture process making stack emissions negligible.

C. Based on remaining SO_2 in FG after bulk polishing.

D. Defined as: 1-[(Stack Gas Carbon-Air Carbon)/(Total Carbon In-Air Carbon)] and expressed as percentage.

1.1.5.2 Performance Summary

Based on system simulation results, the CEPACS system performance was estimated. In the process of capturing CO_2, the CEPACS system produces additional net AC output of 319 MWe at a plant efficiency of 43.7% (NG HHV basis). The ECM performance was based upon testing results at CEPACS operating conditions (as described in Section 1.1.3.2). The overall performance for the CEPACS plant, as applied to a 550 MW PC plant (from Case 11 of the referenced DOE/NETL report [5]), is summarized in Table 1-8, which includes auxiliary power requirements (including CO_2 compression).

Table 1-8. PC Plant with CEPACS CO_2 Capture System: Performance Summary

Plant Performance Summary - Case 3 - PC + ECM-based CEPACS	
CEPACS System (ECM Module) Power, Gross AC kWe[1]	396,480
CEPACS System Auxiliary Load Summary, kWe	
Flue Gas Blower	7,408
Supplemental Air Blower	4,960
Polishing FGD	4,204
Anode Exit Compressor - Stage 1	25,980
Anode Exit Compressor - Stage 2	26,449
Absorption Chillers	374
CO2 Liquid Pump	5,161
Water Pumps	17
Miscellaneous Balance of Plant[2]	1,500
Transformer Losses	1,239
TOTAL CEPACS AUXILIARIES, kWe	**77,292**
CEPACS NET POWER, kWe	**319,188**
CEPACS Net Plant Efficiency (HHV Natural Gas)	43.6%
CEPACS Net Plant Heat Rate, kJ/kWh	8289
PULVERIZED COAL PLANT NET POWER, AC kWe[3]	**549,990**
TOTAL (PC + CEPACS) NET POWER w/ CO_2 capture, kWe	**869,178**
Net Plant Efficiency w/ CO_2 Capture[4]	40.7%
Net Plant Heat Rate w/ CO_2 Capture, kJ/kWh[4]	8843
CONSUMABLES	
As-Received Coal Feed, kg/hr	185,759
Coal Thermal Input, kWt[5]	1,400,162
Natural Gas Feed, kg/hr	50,318
Natural Gas Thermal Input, kWt[6]	734936

1. ECM Module power includes DC-AC losses, assuming 96% conversion efficiency
2. Includes plant control systems, lighting, HVAC, and misc. low voltage loads
3. Net power from Case 11 of referenced DOE report
4. Basis: HHV Coal + HHV Natural Gas

5. HHV of As-Received Illinois No. 6 coal is 27,135 kJ/kg

6. HHV of Natural Gas is 52,581 kJ/kg

In the process of capturing 90% of the CO_2 from the PC plant flue gas, the ECM-based CEPACS system for the 550 MW (net AC) PC plant simultaneously generates additional (net AC) power after compensating for the auxiliary power requirements of CO_2 capture and compression. The net electrical efficiency of the CEPACS-equipped PC plant (with CO_2 capture) was estimated to be 40.7% (based on higher heating values of coal and natural gas fuels used by PC plant and CEPACS system, respectively).

1.1.5.3 Environmental Performance

The environmental performance was estimated for the PC plant (Case 11 of DOE-NETL Report) combined with the CEPACS system based on a gross power of 977 MW and is presented in Table 1-9. Emission limits from the US EPA NSPS MATS are also shown in the table for reference. The reported emissions include the individual pollutants as SO_2, NO_x, Hg and Particulates. Carbon dioxide emitted with the plant exhaust (ECM cathode side) represents CO_2 in the flue gas which is not captured by the ECM stacks. This is reported as a mass flow per net power. The percentage of CO_2 captured exceeds the 90% capture level minimum.

The primary and the final polishing SO_2 scrubber units reduce the SO_2 level to 0.3 ppm_v in the flue gas (fed to the ECM cathode). The SO_2 which is not removed by the primary (1st) Wet Limestone Scrubber and the CEPACS Polishing Wet Limestone scrubber (2nd) is emitted to the environment. All sulfur is reported as SO_2. Sulfur in the natural gas fuel (supplementary fuel for ECM anodes) is adsorbed and captured by the fuel desulfurizer sorbent.

The NO_x emissions correspond to the flue gas NO_2 and NO content which is not removed/converted by the ECM stacks. During normal power operation ECM testing results have shown that >70% of the flue gas NO_x content is transferred across the membrane to the anode and reduced. No NO_x emissions are created within the CEPACS system. The overall emissions specific flow rate of 0.054 kg/MWh is a fraction of the MATS limit of 0.32 kg/MWh.

Mercury (Hg) emissions represent the mercury content in the PC Plant flue gas which is not scrubbed out by the Primary wet lime scrubber unit. This primary scrubber removes 90% of the Hg in the flue gas feed by wet lime impingement and conversion. No credit is taken for Hg removal in the downstream polishing scrubber. The mercury passes through the ECM cathode side, as verified by ECM contaminant evaluation testing.

Particulate emissions account for the PC Plant flue gas particulate matter not removed by a combination of the PC plant baghouse and the two Wet Lime scrubbers in series. These solids are removed at 99.8% removal efficiency. The remaining particulates exit with the CEPACS plant exhaust stream. The emission level is ~ 37% of the MATS limit of 0.041 kg/MWh.

Table 1-9. Air Emissions for Case 3: 550 MW PC Plant with CEPACS System

	kg/GJ (lb/MMBtu)		Tonne/year (ton/year) 85% CF		kg/MWh (lb/MWh)	
SO_2	0.0003	(0.0006)	15	(16)	0.002	(0.0045)
NO_x	0.007	(0.015)	377	(416)	0.052	(0.1143)
Particulates	0.002	(0.004)	105	(116)	0.014	(0.0318)
Hg	0.0000	(0.000)	0.018	(0.020)	2.54E-06	(5.60E-06)
CO_2	5.7	(13.3)	326,287	(359,666)	45	(99)
CO_2[1]					50	(111)

[1] CO_2 Emissions Based on Net Plant Output

US EPA NSPS Air Toxics Standards (MATS) Limits

Constituent	lb/MWh	kg/MWh
SO_2	1.0	0.45
NOx	0.7	0.32
PM	0.09	0.04

1.1.5.4 Carbon Balance

Table 1-10 shows the carbon balance for the CEPACS system. The CEPACS system is designed to capture at least 90% of the carbon from the coal plant flue gas. The total carbon captured exceeds 92%.

Table 1-10. Carbon Balance for CEPACS System

Carbon In, kg/hr		Carbon Out, kg/hr	
Flue Gas from PC Plant	120,333	Plant Exhaust	11,949
Natural Gas	36,300	CO_2 Product	144,839
Supplemental Air	163	Miscellaneous (Disolved)	9
Total	**156,796**	**Total**	**156,796**
Carbon Capture Percentage (of total C Entering CEPACS)			**92.48%**
Carbon Capture Percentage (of C in Flue Gas)			**90.07%**

1.1.5.5 Sulfur Balance

Table 1-11 shows the sulfur balance for the CEPACS plant. Sulfur input comes from the sulfur (present as SO_2) in the PC plant flue gas fed to ECM cathodes and from the sulfur (present as inorganic and organic compounds) in the pipeline natural gas (supplementary fuel) fed to the ECM anodes. Sulfur output includes the sulfur recovered from the Polishing FGD as gypsum, sulfur adsorbed by (and disposed of with) the sorbent in the natural gas desulfurizer vessels, and sulfur emitted in the plant exhaust.

Table 1-11. Sulfur Balance for CEPACS Plant

Sulfur In, kg/hr		Sulfur Out, kg/hr	
Flue Gas from PC Plant	199.3	Polishing FGD Product	197.9
Natural Gas	0.55	Plant Exhaust	1.4
		Removal in NG Desulfurizers	0.55
Total	**199.9**	**Total**	**199.9**

1.1.5.6 Energy Balance

The overall CEPACS plant energy balance based on the CHEMCAD system simulations is shown in Table 1-12. The auxiliary or parasitic power consumed by the CEPACS plant is supplied from the power generated by the ECM stacks in the process of separating CO_2 from the PC plant flue gas. The other (miscellaneous) process losses are negligible. These may relate to losses such as motor losses for the fluid transport equipment.

Table 1-12. Overall Energy Balance for CEPACS System (25°C Reference)

	HHV		Heat Content: Sensible + Latent		Power		Total	
	GJ/hr	MMBtu/hr	GJ/hr	MMBtu/hr	GJ/hr	MMBtu/hr	GJ/hr	MMBtu/hr
Energy In								
Natural Gas Feed	2,643.2	2,506.4	(1.2)	(1.1)			2,642.0	2,505.3
Flue Gas Feed			566.4	537.1			566.4	537.1
Air Feed			6.2	5.9			6.2	5.9
Cooling Water Supply			(1,020.7)	(967.9)			(1,020.7)	(967.9)
Total Energy In	**2,643.2**	**2,506.4**	**(449.3)**	**(426.0)**	**-**	**-**	**2,194.0**	**2,080.4**
Energy Out								
CO_2 Product			(27.6)	(26.2)			(27.6)	(26.2)
Plant Exhaust			698.7	662.5			698.7	662.5
Cooling Water Return			160.4	152.1			160.4	152.1
Excess Water to PC Plant			(3.4)	(3.2)			(3.4)	(3.2)
Power (net AC output)					1,148.6	1,089.1	1,148.6	1,089.1
Inverter & Transformer Losses					63.9	60.6	63.9	60.6
Auxiliary power load (non-process)					5.4	5.1	5.4	5.1
Heat Losses from Piping & Equip			124.3	117.9			124.3	117.9
Other Process Losses*			23.7	22.4			23.7	22.4
Total Energy Out	**-**	**-**	**976.1**	**925.5**	**1,217.9**	**1,154.8**	**2,194.0**	**2,080.4**

* Includes losses such as motor losses for the fluid transport equipment

1.1.5.7 Water Balance

Figure 1-15 shows the water block flow diagram: ECM-Based CEPACS System Water Balance (Dwg No. 521S-31-03). The focal point of the balance is the PC Plant Cooling Tower. The Tower and the PC Plant existing loops are depicted as one block. Because the CEPACS system (including the Polishing FGD) will be processing the PC plant flue gas, the circulation heat duty /size of this cooling tower will be increased (only the CEPACS system-specific water requirements are shown in the block diagram).

The CEPACS system is a net producer of clean process water which is sent to the PC plant for process requirements. CEPACS internal water consumption-throughput is shown as a recycle stream which includes boiler water (steam) required for ECM fuel feed and quench water used upstream of the shift converter (LTSC).

The cooling water loops designated as “Anode Exhaust Gas Precoolers / Condensers” and “Chillers” represent the cooling water used in CEPACS heat exchangers and chillers. These are closed loops with no consumption. The PC Plant cooling tower inlet is shown as makeup water only. The cooling tower evaporation and drift losses are shown as an outlet stream.

The primary exit water from the PC Plant Cooling Tower is the additional blowdown water proportioned to the above-mentioned CEPACS heat exchanger cooling water loops. A large fraction of the cooling tower blowdown water (500 gpm) is utilized as feed water to the Polishing FGD scrubber. This feature serves to reduce the net water withdrawal of the CEPACS system. Most of the scrubber feed water is consumed in making slurry and gypsum. Only in Off-Design operations would a small amount of the cooling tower feed water go to the Waste Water clarifier with some accounted for via evaporation and losses (with solids).

Table 1-13 shows the overall water balance for the CEPACS system applied to a 550 MW PC plant (Case 3), including the water usage of the base PC plant.

Table 1-13. Water Balance for 550 MW PC Plant Equipped with CEPACS Plant

	Raw Water Withdrawal, m^3/min (gpm)	Process Water Discharge, m^3/min (gpm)	Raw Water Consumption, m^3/min (gpm)
Primary FGD Makeup	3.6 (951)	0.0 (0) Note 1	3.6 (951)
BFW Makeup	0.0 (0)	0.0 (0)	0.0 (0)
CEPACS Process	-1.4 (-365) Note 2	0.0 (0)	-1.4 (-365)
Cooling Tower & Polishing FGD	23.2 (6,135)	6.0 (1594) Note 1	17.2 (4,541)
Totals	**25.4 (6,721)**	**6.0 (1,594)**	**19.4 (5,127)**

Note 1: Polishing FGD utilizes blowdown from the cooling tower as feed water; no raw-source water is used. See CEPACS system water block diagram.
Note 2: Negative numbers designate water exported from (or produced by) the system.

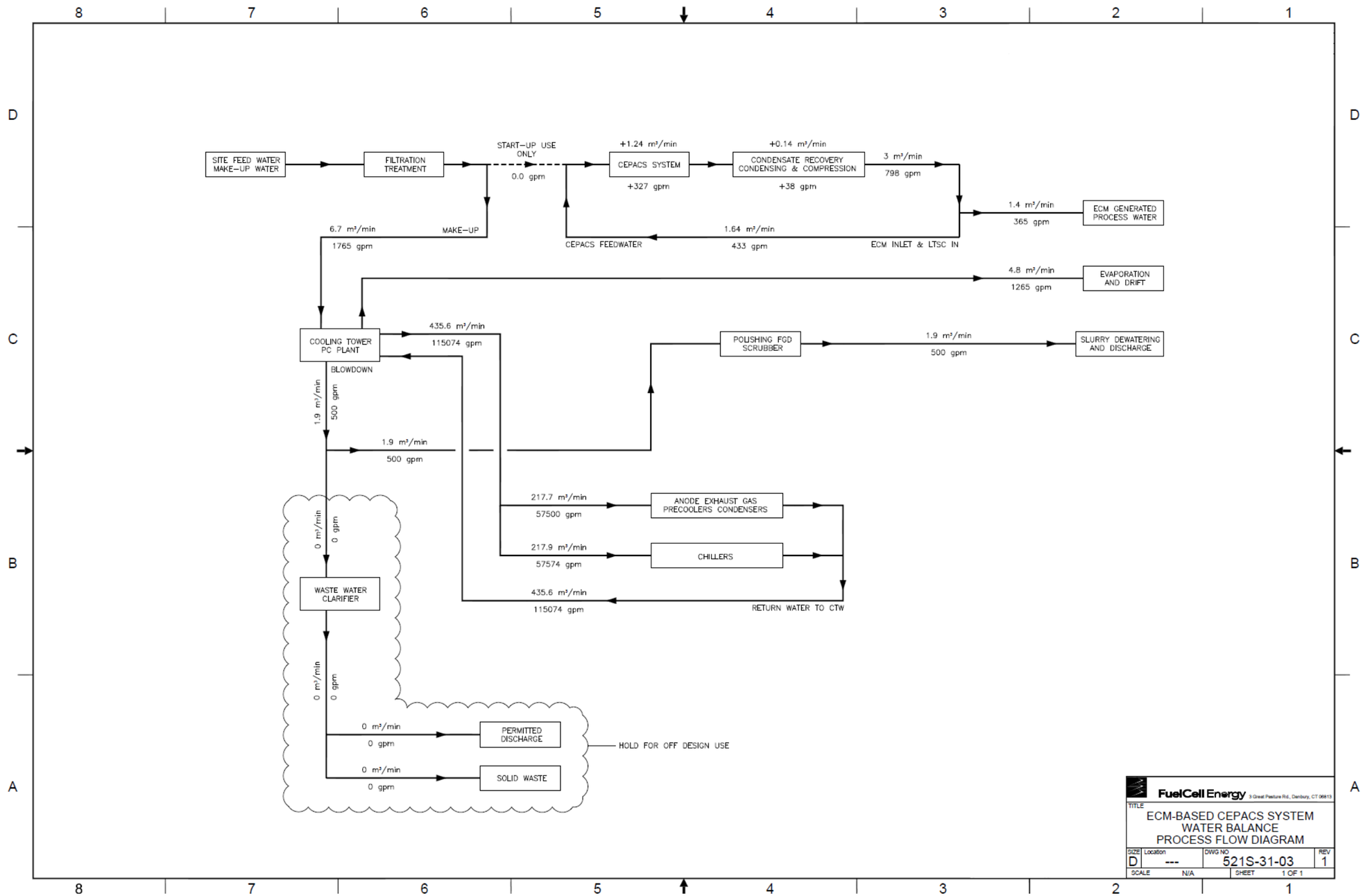

Figure 1-15. Water Block Flow Diagram for the CEPACS System

1.1.6 CEPACS Plant Economic Analysis

The cost estimate for the CO_2 capture system was generated utilizing the guidelines set forth in the DOE - NETL documents mentioned under 'Experimental Methods' section of this report. The approach taken, and the assumptions used, in the economic analysis have been summarized in the Design Basis section (Section 1.1). Cost estimates for all major process equipment and systems were generated from a combination of vendor contacts and AECOM's historical cost databases. Additional information such as piping and ductwork cost estimation methodology is presented under Section 3.1 that follows.

1.1.6.1 Case 3 Capital Cost Estimate

Piping and ductwork cost methodology

The piping and ductwork cost estimate was developed utilizing the pipe sizes estimated. Each pipe run was evaluated individually according to the design pressure and temperature to determine the appropriate pipe schedule and materials. In most cases, standard weight pipe was used. For pipe sizes less than 14 inches (35.6 cm) in diameter, the wall thickness is equivalent to that for Schedule 40. For the larger pipe sizes, standard weight is equivalent to that for Schedule 20.

When design conditions allowed and wherever possible, ducts were selected in lieu of piping to reduce costs. In every case, the duct was estimated to be made of 3/16-inch (0.48 cm) thick carbon steel plate with stiffeners spaced every 36 inches (91 cm), a configuration that is quite common for ductwork in power plants. The use of stiffened carbon steel plate in lieu of piping was also viewed to be a lower overall cost approach to accommodate the fairly significant temperatures. The ASME B31.3 pipe code cautions against the use of carbon steel at temperatures above 800°F (427°C), citing an increased likelihood of inter-granular phase transformation and the potential for graphitization of the carbon steel. If this occurs, the material becomes weakened and in some cases more brittle, requiring additional reinforcement, such as external stiffeners. As an alternative, ASME B31.3 recommends utilizing higher grade materials such as stainless or other alloys. Given the increased cost associated with these materials, AECOM elected to estimate these duct runs utilizing the carbon steel and external stiffener configuration.

Several assumptions/good design practices were employed to determine the cross sectional area of the ductwork and estimate the material costs. Velocities in the ductwork were assumed to be limited to 60 ft/sec (18.3 m/s). This velocity is typical for FGD ductwork systems, as well as compressed air piping, to stay below acoustic velocity limits and avoid excessive noise generation in the ductwork and/or pipes. Wherever possible, factory-fabricated ducting (spiral wound round or rectangular) was utilized. In cases where factory-fabricated ducting was not large enough to accommodate the gas flows, multiple ducts were selected rather than using a single field-erected duct. This methodology was developed as a cost reduction measure based on design guidance and quotations from ducting suppliers. As fittings add significantly to the ducting costs, effort was taken to maximize the use of straight runs.

Case 3 Capital Cost

The capital cost for Case 3 (PC + CEPACS-based CO_2 capture) includes two components: the CEPACS system cost and the PC plant cost. The PC plant cost estimate was taken or derived from the Case 11 estimate in the DOE Updated Costs for Selected Bituminous Coal Cases report [6]. Table 3-1 shows the capital cost estimate for the CEPACS plant which was developed by AECOM in 2013/14 dollars. The normalized cost numbers ($/kW shown in the extreme right-hand column) are based on total net power output of the CEPACS equipped PC plant. The TOC

(total overnight cost) was then de-escalated to 2011 dollars. Table 1-14 shows the complete Case 3 plant capital cost summary (PC + CEPACS) organized by detailed cost accounts along with owner's costs, TOC, and TASC (total as-spent cost). The values in Table 1-15 are presented in 2011 dollars. The estimated TOC of the supercritical PC power plant with the CEPACS system for CO_2 capture is $2,842/kW.

Table 1-14. Capital Cost Estimate for CEPACS System, 2014 USD

Tag No.	Item/Description	BL Equipment Cost	Scaled Equip Cost	Material Cost	Labor Direct	Labor Indirect	Bare Erected Cost, $	Eng'g CM H.O. & Fee	Contingencies Process	Contingencies Project	TOTAL PLANT COST $	TOTAL PLANT COST $/kW
100-HX-102	Boiler Equipment	$536,544	$446,845	$0	$7,957	$9,341	$464,144	$43,629	$23,207.18	$79,647	$610,627	$0.70
	Boiler Civil	$0	$0	$13,477	$17,946	$21,067	$52,489	$4,934	$2,624	$9,007	$69,054	$0.08
	Boiler Piping	$0	$0	$571,540	$254,615	$298,895	$1,125,050	$105,755	$56,253	$193,059	$1,480,116	$1.70
	SUBTOTAL 1.	**$536,544**	**$446,845**	**$585,017**	**$280,518**	**$329,303**	**$1,641,683**	**$154,318**	**$82,084**	**$281,713**	**$2,159,798**	**$2**
200-RR-101/2	Natural Gas Vessel (with desulfurizer)	$170,642	$141,932	$0	$227,341	$266,879	$636,153	$59,798	$31,807.65	$109,164	$836,923	$0.96
	Natural Gas Vessel Civil	$0	$0	$29,087	$40,685	$47,760	$117,532	$11,048	$5,877	$20,168	$154,625	$0.18
	SUBTOTAL 2.	**$170,642**	**$141,932**	**$29,087**	**$268,026**	**$314,639**	**$753,685**	**$70,846**	**$37,684**	**$129,332**	**$991,547**	**$1**
200-HX-104	Fuel Preheater	$6,050,000	$5,036,384	$0	$51,343	$60,272	$5,147,999	$483,912	$257,399.93	$883,397	$6,772,707	$7.79
	Fuel Preheater Civil			$47,175	$83,002	$97,438	$227,615	$21,396	$11,381	$39,059	$299,450	$0.34
	Fuel Preheater Electrical			$0	$0	$0	$0	$0	$0	$0	$0	$0.00
	SUBTOTAL 3.	**$6,050,000**	**$5,036,384**	**$47,175**	**$134,345**	**$157,710**	**$5,375,613**	**$505,308**	**$268,781**	**$922,455**	**$7,072,157**	**$8**
200-ECM-106	Electrochemical Module, Incl Civil		$208,284,544	$21,565,291	$4,431,904	$5,202,670	$239,484,408	$22,511,534	$11,974,220	$41,095,524	$315,065,688	$362.45
		$0	$0	$0	$0	$0	$0	$0	$0	$0	$0	$0.00
		$0	$0	$0	$0	$0	$0	$0	$0	$0	$0	$0.00
	SUBTOTAL 4.	**$0**	**$208,284,544**	**$21,565,291**	**$4,431,904**	**$5,202,670**	**$239,484,408**	**$22,511,534**	**$11,974,220**	**$41,095,524**	**$315,065,688**	**$362**
300-BL-103	Flue Gas Blower	$2,400,000	$2,284,012	$0	$964,399	$1,132,121	$4,380,533	$411,770	$219,026.64	$751,699	$5,763,029	$6.63
	Flue Gas Blower Civil			$220,651	$320,522	$376,265	$917,438	$86,239	$45,872	$157,432	$1,206,981	$1.39
	Flue Gas Blower Electrical			$174,088	$305,877	$359,073	$839,039	$78,870	$41,952	$143,979	$1,103,840	$1.27
	SUBTOTAL 5.	**$2,400,000**	**$2,284,012**	**$394,740**	**$1,590,799**	**$1,867,459**	**$6,137,010**	**$576,879**	**$306,850**	**$1,053,111**	**$8,073,850**	**$9**
300-HX-105	Flue Gas Heater	$11,417,140	$10,865,370	$0	$191,164	$224,410	$11,280,944	$1,060,409	$564,047.22	$1,935,810	$14,841,211	$17.07
	Flue Gas Heater Civil			$47,175	$83,002	$97,438	$227,615	$21,396	$11,381	$39,059	$299,450	$0.34
	Flue Gas Heater Electrical			$0	$0	$0	$0	$0	$0	$0	$0	$0.00
	SUBTOTAL 6.	**$11,417,140**	**$10,865,370**	**$47,175**	**$274,167**	**$321,848**	**$11,508,559**	**$1,081,805**	**$575,428**	**$1,974,869**	**$15,140,661**	**$17**
300-HE-106	Start Up Duct Burner	$170,940	$154,393	$0	$77,581	$91,073	$323,047	$30,366	$16,152.35	$55,435	$425,001	$0.49
	SUBTOTAL 7.	**$170,940**	**$154,393**	**$0**	**$77,581**	**$91,073**	**$323,047**	**$30,366**	**$16,152**	**$55,435**	**$425,001**	**$0.5**
300-RR-108	Oxidizer (including catalyst)	$358,516	$323,811	$0	$2,394	$2,810	$329,015	$30,927	$16,450.75	$56,459	$432,852	$0.50
	Oxidizer Civil			$13,309	$21,300	$25,005	$59,614	$5,604	$2,981	$10,230	$78,428	$0.09
	Oxidizer Electrical			$0	$0	$0	$0	$0	$0	$0	$0	$0.00
	SUBTOTAL 8.	**$358,516**	**$323,811**	**$13,309**	**$23,694**	**$27,815**	**$388,629**	**$36,531**	**$19,431**	**$66,689**	**$511,280**	**$0.6**
400-RR-101	LTSC (including catalyst)	$19,166,000	$17,799,840	$0	$71,538	$83,980	$17,955,358	$1,687,804	$897,767.91	$3,081,139	$23,622,069	$27.17
	LTSC Civil	$0	$0	$69,231	$121,516	$142,649	$333,396	$31,339	$16,670	$57,211	$438,616	$0.50
	LTSC Piping	$0	$0	$0	$0	$0	$0	$0	$0	$0	$0	$0.00
	SUBTOTAL 9.	**$19,166,000**	**$17,799,840**	**$69,231**	**$193,054**	**$226,629**	**$18,288,754**	**$1,719,143**	**$914,438**	**$3,138,350**	**$24,060,685**	**$28**
400-HX-109	Condenser	$1,577,077	$1,464,662.02	$0	$5,134	$6,027	$1,475,823	$138,727	$73,791.17	$253,251	$1,941,593	$2.23
	Condenser Civil			$4,717	$8,300	$9,744	$22,762	$2,140	$1,138	$3,906	$29,945	$0.03
	Condenser Electrical			$0	$0	$0	$0					
	SUBTOTAL 10.	**$1,577,077**	**$1,464,662**	**$4,717**	**$13,435**	**$15,771**	**$1,498,585**	**$140,867**	**$74,929**	**$257,157**	**$1,971,538**	**$2**
500-FL-101	Air Filter	$1,396,528	$1,251,817	$0	$314,303	$368,965	$1,935,085	$181,898	$96,754.24	$332,061	$2,545,797	$2.93
	Air Filter Civil	$0	$0	$10,762	$17,514	$20,559	$48,835	$4,590	$2,442	$8,380	$64,247	$0.07
	Air Filter Steel	$0	$0	$156,643	$72,440	$85,039	$314,122	$29,527	$15,706	$53,903	$413,259	$0.48
	SUBTOTAL 11.	**$1,396,528**	**$1,251,817**	**$167,405**	**$404,257**	**$474,563**	**$2,298,041**	**$216,016**	**$114,902**	**$394,344**	**$3,023,303**	**$3**
500-BL-101	Air Blower	$5,143,220	$4,610,270	$0	$411,342	$482,880	$5,504,492	$517,422	$275,224.62	$944,571	$7,241,710	$8.33
	Air Blower Civil			$82,093	$129,408	$151,914	$363,416	$34,161	$18,171	$62,362	$478,110	$0.55
	Air Blower Electrical			$87,044	$152,939	$179,537	$419,520	$39,435	$20,976	$71,990	$551,920	$0.63
	SUBTOTAL 12.	**$5,143,220**	**$4,610,270**	**$169,137**	**$693,690**	**$814,331**	**$6,287,428**	**$591,018**	**$314,371**	**$1,078,923**	**$8,271,740**	**$10**

Table 1-14. Capital Cost Estimate for CEPACS System, 2014 USD (continued)

Tag No.	Item/Description	BL Equipment Cost	Scaled Equip Cost	Material Cost	Labor Direct	Labor Indirect	Bare Erected Cost, $	Eng'g CM H.O. & Fee	Contingencies Process	Contingencies Project	TOTAL PLANT COST $	TOTAL PLANT COST $/kW
500-HX-101	Anode Exit Cooler	$12,700,000	$11,963,387	$0	$51,343	$60,272	$12,075,002	$1,135,050	$598,169	$2,071,233	$15,879,454	$18.27
	Anode Exit Cooler Civil			$47,175	$83,002	$97,438	$227,615	$21,396	$11,381	$39,059	$299,450	$0.34
	Anode Exit Electrical			$0	$0	$0	$0	$0	$0	$0	$0	$0.00
	SUBTOTAL 13.	**$12,700,000**	**$11,963,387**	**$47,175**	**$134,345**	**$157,710**	**$12,302,617**	**$1,156,446**	**$609,550**	**$2,110,292**	**$16,178,904**	**$19**
500-HX-102	Air Preheater	$16,920,000	$15,166,717	$0	$51,343	$60,272	$15,278,332	$1,436,163	$763,916.60	$2,621,762	$20,100,174	$23.12
	Air Preheater Civil			$47,175	$83,002	$97,438	$227,615	$21,396	$11,381	$39,059	$299,450	$0.34
	Air Preheater Electrical			$0								
	SUBTOTAL 14.	**$16,920,000**	**$15,166,717**	**$47,175**	**$134,345**	**$157,710**	**$15,505,947**	**$1,457,559**	**$775,297**	**$2,660,820**	**$20,399,624**	**$23**
100-PU-101	Condensate Pump #1	$129,293	$105,691	$0	$7,586	$8,905	$122,182	$11,485	$6,109.09	$20,966	$160,743	$0.18
	Condensate Pump #1 Civil	$0	$0	$829	$3,106	$3,646	$7,581	$713	$379	$1,301	$9,973	$0.01
	Condensate #1 Electrical	$0	$0	$7,859	$32,080	$37,659	$77,598	$7,294	$3,880	$13,316	$102,088	$0.12
	SUBTOTAL 15.	**$129,293**	**$105,691**	**$8,689**	**$42,771**	**$50,209**	**$207,360**	**$19,492**	**$10,368**	**$35,583**	**$272,803**	**$0.31**
100-PU-102	Condensate Pump #2	$120,590	$107,867	$0	$5,372	$6,306	$119,546	$11,237	$5,977.29	$20,514	$157,274	$0.18
	Condensate Pump #2 Civil	$0	$0	$472	$2,174	$2,553	$5,199	$489	$260	$892	$6,839	$0.01
	Condensate #2 Electrical	$0	$0	$7,859	$32,080	$37,659	$77,598	$7,294	$3,880	$13,316	$102,088	$0.12
	SUBTOTAL 16.	**$120,590**	**$107,867**	**$8,331**	**$39,626**	**$46,518**	**$202,342**	**$19,020**	**$10,117**	**$34,722**	**$266,201**	**$0.31**
100-PU-103	Feedwater Pumps Equipment	$131,779	$110,353	$0	$8,122	$9,534	$128,009	$12,033	$6,400.44	$21,966	$168,408	$0.19
	Feedwater Pumps Civil	$0	$0	$913	$3,305	$3,880	$8,098	$761	$405	$1,390	$10,654	$0.01
	Feedwater Pumps Electrical	$0	$0	$7,859	$32,080	$37,659	$77,598	$7,294	$3,880	$13,316	$102,088	$0.12
	SUBTOTAL 17.	**$131,779**	**$110,353**	**$8,773**	**$43,506**	**$51,073**	**$213,705**	**$20,088**	**$10,685**	**$36,672**	**$281,150**	**$0.32**
100-TK-106	Water Collection Tank	$91,298	$74,873	$0	$7,123	$8,362	$90,358	$8,494	$4,518	$15,506	$118,876	$0.14
	Water Collection Civil	$0	$0	$8,654	$15,189	$17,831	$41,674	$3,917	$2,084	$7,151	$54,827	$0.06
	Water Collection Piping	$0	$0	$494,444	$120,697	$141,688	$756,829	$71,142	$37,841	$129,872	$995,684	$1.15
	SUBTOTAL 18.	**$91,298**	**$74,873**	**$503,098**	**$143,010**	**$167,881**	**$888,862**	**$83,553**	**$44,443**	**$152,529**	**$1,169,387**	**$1**
300-BL-100	FD Fan	$1,086,937	$1,034,403.74	$0	$13,486	$15,832	$1,063,722	$99,990	$53,186.11	$182,535	$1,399,433	$1.61
	FD Fan Civil			$20,708	$24,530	$28,796	$74,033	$6,959	$3,702	$12,704	$97,398	$0.11
	FD Fan Electrical			$8,704	$15,294	$17,954	$41,952	$3,943	$2,098	$7,199	$55,192	$0.06
	SUBTOTAL 19.	**$1,086,937**	**$1,034,404**	**$29,412**	**$53,310**	**$62,581**	**$1,179,707**	**$110,892**	**$58,985**	**$202,438**	**$1,552,023**	**$2**
300-RR-101	Polishing FGD	$76,074,655	$72,397,855	$0	$5,593,234	$6,565,971	$84,557,060	$7,948,364	$4,227,853	$14,509,992	$111,243,269	$127.97
	SUBTOTAL 20.	**$76,074,655**	**$72,397,855**	**$0**	**$5,593,234**	**$6,565,971**	**$84,557,060**	**$7,948,364**	**$4,227,853**	**$14,509,992**	**$111,243,269**	**$128**
400-HX-101	Absorbtion Chiller stage I	$2,500,000	$2,237,312	$0	$13,096	$15,373	$2,265,781	$212,983	$113,289.06	$388,808	$2,980,862	$3.43
	Absorbtion Chiller Stage I Civil			$15,592	$20,391	$23,937	$59,921	$5,633	$2,996	$10,282	$78,832	$0.09
	Absorbtion Chiller Stage I Electrical			$0	$0	$0	$0	$0	$0	$0	$0	$0.00
	SUBTOTAL 21.	**$2,500,000**	**$2,237,312**	**$15,592**	**$33,487**	**$39,311**	**$2,325,702**	**$218,616**	**$116,285**	**$399,090**	**$3,059,694**	**$4**
400-HX-102	Interstage Precooler	$2,562,707	$2,293,430	$0	$13,096	$15,373	$2,321,899	$218,259	$116,094.96	$398,438	$3,054,691	$3.51
	Interstage Precooler Civil			$15,592	$20,391	$23,937	$59,921	$5,633	$2,996	$10,282	$78,832	$0.09
	Interstage Precooler Electrical			$0								
	SUBTOTAL 22.	**$2,562,707**	**$2,293,430**	**$15,592**	**$33,487**	**$39,311**	**$2,381,820**	**$223,891**	**$119,091**	**$408,720**	**$3,133,522**	**$4**
400-HX-104	CO2 Recycle Heater	$1,501,563	$1,434,558	$0	$13,096	$15,373	$1,463,027	$137,525	$73,151.34	$251,055	$1,924,758	$2.21
	CO2 Recycle Heater Civil			$15,592	$20,391	$23,937	$59,921	$5,633	$2,996	$10,282	$78,832	$0.09
	CO2 Recycle Electrical			$0	$0	$0	$0	$0	$0	$0	$0	$0.00
	SUBTOTAL 23.	**$1,501,563**	**$1,434,558**	**$15,592**	**$33,487**	**$39,311**	**$1,522,948**	**$143,157**	**$76,147**	**$261,338**	**$2,003,590**	**$2**

Table 1-14. Capital Cost Estimate for CEPACS System, 2014 USD (continued)

Tag No.	Item/Description	BL Equipment Cost	Scaled Equip Cost	Material Cost	Labor Direct	Labor Indirect	Bare Erected Cost, $	Eng'g CM H.O. & Fee	Contingencies Process	Contingencies Project	TOTAL PLANT COST $	TOTAL PLANT COST $/kW
400-HX-105	Chiller Precooler	$2,625,334	$2,349,477	$0	$13,096	$15,373	$2,377,946	$223,527	$118,897.28	$408,055	$3,128,425	$3.60
	Chiller Precooler Civil			$15,592	$20,391	$23,937	$59,921	$5,633	$2,996	$10,282	$78,832	$0.09
	Chiller Precooler Electrical			$0	$0	$0	$0	$0	$0	$0	$0	$0.00
	SUBTOTAL 24.	**$2,625,334**	**$2,349,477**	**$15,592**	**$33,487**	**$39,311**	**$2,437,867**	**$229,159**	**$121,893**	**$418,338**	**$3,207,257**	**$4**
400-HX-106	Chiller Inlet Cooler	$958,726	$857,988	$0	$13,096	$15,373	$886,457	$83,327	$44,322.83	$152,116	$1,166,222	$1.34
	Chiller Inlet Cooler Civil			$15,592	$20,391	$23,937	$59,921	$5,633	$2,996	$10,282	$78,832	$0.09
	Chiller Inlet Cooler Electrical			$0	$0	$0	$0	$0	$0	$0	$0	$0.00
	SUBTOTAL 25.	**$958,726**	**$857,988**	**$15,592**	**$33,487**	**$39,311**	**$946,378**	**$88,959**	**$47,319**	**$162,398**	**$1,245,054**	**$1**
400-HX-107	Absorbtion Chiller Stage 2	$35,000,000	$31,322,372	$0	$731,165	$858,324	$32,911,862	$3,093,715	$1,645,593.09	$5,647,675	$43,298,845	$49.81
	Absorbtion Chiller Stage 2 Civil			$610,376	$738,913	$867,420	$2,216,708	$208,371	$110,835	$380,387	$2,916,302	$3.35
	Absorbtion Chiller Stage 2 Electrical			$0	$0	$0	$0	$0	$0	$0	$0	$0.00
	SUBTOTAL 26.	**$35,000,000**	**$31,322,372**	**$610,376**	**$1,470,078**	**$1,725,744**	**$35,128,570**	**$3,302,086**	**$1,756,429**	**$6,028,063**	**$46,215,147**	**$53**
400-HX-108	CO2 Reheater	$2,418,350	$2,233,678	$0	$13,096	$15,373	$2,262,146	$212,642	$113,107.32	$388,184	$2,976,080	$3.42
	CO2 Reheater Civil			$15,592	$20,391	$23,937	$59,921	$5,633	$2,996	$10,282	$78,832	$0.09
	CO2 Reheater Electrical			$0								
	SUBTOTAL 27.	**$2,418,350**	**$2,233,678**	**$15,592**	**$33,487**	**$39,311**	**$2,322,067**	**$218,274**	**$116,103**	**$398,467**	**$3,054,912**	**$4**
400-SP-101	Water Separator #1	$302,175	$280,636	$0	$239,090	$280,671	$800,398	$75,237	$40,019.90	$137,348	$1,053,004	$1.21
	Water Separator #1 Civil	$0	$0	$20,568	$30,178	$35,426	$86,172	$8,100	$4,309	$14,787	$113,369	$0.13
	SUBTOTAL 28.	**$302,175**	**$280,636**	**$20,568**	**$269,269**	**$316,098**	**$886,570**	**$83,338**	**$44,329**	**$152,135**	**$1,166,372**	**$1**
400-SP-102	Water Seperator #2	$242,113	$232,556	$0	$196,599	$230,791	$659,946	$62,035	$32,997.30	$113,247	$868,225	$1.00
	Water seperator #2 Civil	$0	$0	$18,404	$27,439	$32,211	$78,054	$7,337	$3,903	$13,394	$102,688	$0.12
	SUBTOTAL 29.	**$242,113**	**$232,556**	**$18,404**	**$224,038**	**$263,001**	**$738,000**	**$69,372**	**$36,900**	**$126,641**	**$970,913**	**$1**
400-SP-103	Water Separator #3	$258,254	$246,629	$0	$65,533	$76,930	$389,092	$36,575	$19,454.61	$66,768	$511,890	$0.59
	Water Separator #3 Civil	$0	$0	$18,404	$27,439	$32,211	$78,054	$7,337	$3,903	$13,394	$102,688	$0.12
	SUBTOTAL 30.	**$258,254**	**$246,629**	**$18,404**	**$92,972**	**$109,141**	**$467,146**	**$43,912**	**$23,357**	**$80,162**	**$614,577**	**$1**
400-CR-101	Compressor	$28,080,000	$26,816,103	$0	$278,224	$326,611	$27,420,938	$2,577,568	$1,371,046.88	$4,705,433	$36,074,985	$41.50
	Compressor Civil			$207,141	$204,745	$240,353	$652,240	$61,311	$32,612	$111,924	$858,087	$0.99
	Compressor Electrical			$60,820	$65,995	$77,472	$204,287	$19,203	$10,214	$35,056	$268,760	$0.31
	SUBTOTAL 31.	**$28,080,000**	**$26,816,103**	**$267,962**	**$548,964**	**$644,436**	**$28,277,464**	**$2,658,082**	**$1,413,873**	**$4,852,413**	**$37,201,832**	**$43**
400-SP-109	CO2 seperator	$342,398	$327,119	$0	$37,584	$44,120	$408,823	$38,429	$20,441.13	$70,154	$537,847	$0.62
	CO2 Seperator Civil	$0	$0	$8,654	$15,189	$17,831	$41,674	$3,917	$2,084	$7,151	$54,827	$0.06
	SUBTOTAL 32.	**$342,398**	**$327,119**	**$8,654**	**$52,773**	**$61,951**	**$450,497**	**$42,347**	**$22,525**	**$77,305**	**$592,674**	**$1**
400-PU-120	CO2 Pump	$1,780,946	$1,644,945	$0	$64,651	$75,894	$1,785,491	$167,836	$89,274.53	$306,390	$2,348,991	$2.70
	CO2 Pump Civil	$0	$0	$1,270	$3,327	$3,906	$8,502	$799	$425	$1,459	$11,186	$0.01
	CO2 Pump Electrical	$0	$0	$7,859	$32,080	$37,659	$77,598	$7,294	$3,880	$13,316	$102,088	$0.12
	SUBTOTAL 33.	**$1,780,946**	**$1,644,945**	**$9,129**	**$100,058**	**$117,459**	**$1,871,591**	**$175,930**	**$93,580**	**$321,165**	**$2,462,265**	**$3**
HVRG-1	HVRG 1	Included with 400-	Included with 400-HX-107		$0	$0	$0	$0	$0.00	$0	$0	$0.00
	HVRG 1 Civil				$0	$0	$0	$0	$0	$0	$0	$0.00
	HVRG 1 Electrical				$0	$0	$0	$0	$0	$0	$0	$0.00
	SUBTOTAL 34.	**$0**	**$0**	**$0**	**$0**	**$0**	**$0**	**$0**	**$0**	**$0**	**$0**	**$0**
HVRG-2	HVRG 2	Included with 400-	Included with 400-HX-107		$0	$0	$0	$0	$0	$0	$0	$0.00
	HVRG 2 Civil				$0	$0	$0	$0	$0	$0	$0	$0.00
	HVRG 2 Electrical				$0	$0	$0	$0	$0	$0	$0	$0.00
	SUBTOTAL 35.	**$0**	**$0**	**$0**	**$0**	**$0**	**$0**	**$0**	**$0**	**$0**	**$0**	**$0**

Table 1-14. Capital Cost Estimate for CEPACS System, 2014 USD (continued)

Tag No.	Item/Description	BL Equipment Cost	Scaled Equip Cost	Material Cost	Labor Direct	Labor Indirect	Bare Erected Cost, $	Eng'g CM H.O. & Fee	Contingencies Process	Contingencies Project	TOTAL PLANT COST $	TOTAL PLANT COST $/kW
Common	Bus Duct	$0	$0	$1,207,222	$148,041	$173,787	$1,529,050	$143,731	$76,452	$262,385	$2,011,618	$2.31
	Piping and Ductwork (see detail)	$0	$0	$50,091,441	$42,698,650	$50,124,502	$142,914,593	$13,433,972	$7,145,730	$24,524,144	$188,018,438	$216.30
	Coatings	$0	$0	$18,895	$32,605	$38,276	$89,776	$8,439	$4,489	$15,406	$118,109	$0.14
	DCS	$0	$0	$3,500,000	$0	$0	$3,500,000	$329,000	$175,000	$600,600	$4,604,600	$5.30
	Ductbank	$0	$0	Incl Elsewhere			$0	$0	$0	$0	$0	$0.00
	Electrical building	$0	$0	$283,341	$293,759	$344,848	$921,949	$86,663	$46,097	$158,206	$1,212,916	$1.40
	Grounding	$0	$0	Incl Elsewhere			$0	$0	$0	$0	$0	$0.00
	Instrumentation	$0	$0	$1,458,366	$350,610	$411,585	$2,220,561	$208,733	$111,028	$381,048	$2,921,370	$3.36
	Insulation	$0	$0	Incl Elsewhere			$0	$0	$0	$0	$0	$0.00
	Lighting/Recepticals	$0	$0	$1,877,952	$3,594,320	$4,219,419	$9,691,690	$911,019	$484,585	$1,663,094	$12,750,388	$14.67
	MCC	$0	$0	$1,100,118	$293,250	$344,250	$1,737,618	$163,336	$86,881	$298,175	$2,286,010	$2.63
	PipeRack	$0	$0	$5,162,935	$2,091,212	$2,454,901	$9,709,048	$912,650	$485,452	$1,666,073	$12,773,223	$14.69
	SiteWork	$0	$0	$4,416,151	$1,455,402	$1,708,516	$7,580,069	$712,526	$379,003	$1,300,740	$9,972,338	$11.47
	Switchgear/Inverters	$0	$0	$7,300,000	$328,440	$385,560	$8,014,000	$753,316	$400,700	$1,375,202	$10,543,218	$12.13
	Transformers	$0	$0	$14,266,065	$1,195,142	$1,402,993	$16,864,201	$1,585,235	$843,210	$2,893,897	$22,186,543	$25.52
	Deep Foundations	$0	$0	$9,689,861	$5,333,251	$6,260,772	$21,283,884	$2,000,685	$1,064,194	$3,652,314	$28,001,078	$32.21
	BOP Piping and Testing	$0	$0	$6,941,622	$17,970,999	$21,096,390	$46,009,010	$4,324,847	$2,300,451	$7,895,146	$60,529,454	$69.63
	Drainage Pipe	$0	$0	$234,115	$206,780	$242,742	$683,637	$64,262	$34,182	$117,312	$899,393	$1.03
	Platforms	$0	$0	$1,218,395	$953,936	$1,119,838	$3,292,169	$309,464	$164,608	$564,936	$4,331,178	$4.98
	SUBTOTAL 36.	**$0**	**$0**	**$108,766,479**	**$76,946,397**	**$90,328,379**	**$276,041,255**	**$25,947,878**	**$13,802,063**	**$47,368,679**	**$363,159,875**	**$418**
	TOTAL COST		**$425,901,831**	**$133,558,466**	**$94,475,085**	**$110,905,535**	**$764,840,918**	**$71,895,046**	**$38,236,465**	**$131,245,864**	**$1,006,218,294**	**$1,158**
	Owner's Costs											
	Preproduction Costs											
	6 Months All Labor										$1,124,500	$1
	1 Month Maintenance Materials										$932,434	$1
	1 Month Non-fuel Consumables										$10,000	$0.01
	1 Month Waste Disposal										$0	$0
	Operator Training/Plant Personel Project Support										$93,600	$0.11
	25% of 1 Months Fuel Cost at 100% CF										$2,968,237	$3
	2% of TPC										$20,124,366	$23
	Total										**$25,253,136**	**$29**
	Inventory Capital											
	60 day supply of fuel and consumables at 100% CF										$20,000	$0
	0.5% of TPC (spare parts)										$5,031,091	$6
	Total										**$5,051,091**	**$6**
	Initial Cost for Catalyst and Chemicals										$2,231,309	$3
	Land										$55,638	$0.06
	Other Owner's Costs										$150,932,744	$174
	Financing										$27,167,894	$31
	Total Overnight Costs (TOC)										**$1,216,910,107**	**$1,400**
	TOC Escalation (to 2011)								Deescalation or 3.6% per year		$122,502,175.37	$141
	TOC 2011 Dollars										**$1,094,407,931.78**	**$1,259**
	TASC Multiplier								(IOU, high-risk, 35 year)		1.140	
	Total As-Spent Cost (TASC) (2011)										**$1,247,625,042.22**	**$1,435**

Table 1-15. Case 3 (PC + CEPACS) Capital Cost Estimate, 2011 USD

Acct		Equipment	Material	Labor		Sales	Bare Erected	Eng'g CM	Contingencies		TOTAL PLANT COST	
No.	Item/Description	Cost	Cost	Direct	Indirect	Tax	Cost, $	H.O. & Fee	Process	Project	$	$/kW
1	COAL & SORBENT HANDLING											
1.1	Coal Receive & Unload	$4,088,000	$0	$1,842,000	$0		$5,930,000	$557,420	$0	$973,113	$7,460,533	$9
1.2	Coal Stackout & Reclaim	$5,283,000	$0	$1,181,000	$0		$6,464,000	$607,616	$0	$1,060,742	$8,132,358	$9
1.3	Coal Conveyors	$4,912,000	$0	$1,168,000	$0		$6,080,000	$571,520	$0	$997,728	$7,649,248	$9
1.4	Other Coal Handling	$1,285,000	$0	$270,000	$0		$1,555,000	$146,170	$0	$255,176	$1,956,346	$2
1.5	Sorbent Receive & Unload	$164,000	$0	$49,000	$0		$213,000	$20,022	$0	$34,953	$267,975	$0
1.6	Sorbent Stackout & Reclaim	$1,841,000	$0	$332,509	$0		$2,173,509	$204,310	$0	$511,664	$2,889,483	$3
1.7	Sorbent Conveyors	$642,000	$139,713	$155,389	$0		$937,102	$88,088	$0	$225,638	$1,250,827	$1
1.8	Other Sorbent Handling	$319,000	$75,125	$164,826	$0		$558,951	$52,541	$0	$163,608	$775,100	$1
1.9	Coal & Sorbent Hnd.Foundations	$0	$2,488,000	$3,280,400	$0		$5,768,400	$542,230	$0	$1,802,639	$8,113,268	$9
	SUBTOTAL 1.	**$18,534,000**	**$2,702,838**	**$8,443,124**	**$0**	**$0**	**$29,679,962**	**$2,789,916**	**$0**	**$6,025,260**	**$38,495,138**	**$44**
2	COAL & SORBENT PREP & FEED											
2.1	Coal Crushing & Drying	$2,341,000	$0	$450,000	$0		$2,791,000	$262,354	$0	$458,003	$3,511,357	$4
2.2	Coal Conveyor to Storage	$5,995,000	$0	$1,291,000	$0		$7,286,000	$684,884	$0	$1,195,633	$9,166,517	$11
2.3	Coal Injection System	$0	$0	$0	$0		$0	$0	$0	$0	$0	$0
2.4	Misc. Coal Prep & Feed	$0	$0	$0	$0		$0	$0	$0	$0	$0	$0
2.5	Sorbent Prep Equipment	$3,286,000	$142,105	$673,169	$0		$4,101,274	$385,520	$0	$918,796	$5,405,589	$6
2.6	Sorbent Storage & Feed	$ 541,698	$7,981	$145,497	$16,679		$711,854	$66,914	$18,104	$184,225	$981,098	$1
2.7	Sorbent Injection System	$0	$0	$0	$0		$0	$0	$0	$0	$0	$0
2.8	Booster Air Supply System	$0	$0	$0	$0		$0	$0	$0	$0	$0	$0
2.9	Coal & Sorbent Feed Foundation	$0	$347,000	$304,497	$0		$651,497	$61,241	$0	$168,531	$881,269	$1
	SUBTOTAL 2.	**$12,163,698**	**$497,086**	**$2,864,163**	**$16,679**	**$0**	**$15,541,625**	**$1,460,913**	**$18,104**	**$2,925,187**	**$19,945,829**	**$23**
3	FEEDWATER & MISC. BOP SYSTEMS											
3.1	Feedwater System	$ 19,139,791	$20,316	$6,187,777	$116,418		$25,464,302	$2,393,644	$29,042	$4,947,239	$32,834,227	$38
3.2	Water Makeup & Pretreating	$ 4,503,760	$383,574	$1,515,702	$127,996		$6,531,032	$613,917	$41,408	$1,706,901	$8,893,258	$10
3.3	Other Feedwater Subsystems	$7,027,000	$0	$2,885,000	$0		$9,912,000	$931,728	$0	$1,626,715	$12,470,443	$14
3.4	Service Water Systems	$1,088,000	$0	$569,000	$0		$1,657,000	$155,758	$0	$362,552	$2,175,310	$3
3.5	Other Boiler Plant Systems	$8,927,330	$545,066	$8,307,361	$306,815		$18,086,571	$1,700,138	$76,479	$2,979,581	$22,842,769	$26
3.6	FO Supply Sys & Nat Gas	$5,151,686	$71,053	$756,893	$440,092		$6,419,725	$603,454	$285,536	$1,096,590	$8,405,305	$10
3.7	Waste Treatment Equipment	$3,565,000	$0	$2,064,000	$0		$5,629,000	$529,126	$0	$1,231,766	$7,389,892	$9
3.8	Misc. Equip.(cranes, AirComp., Comm.)	$2,453,000	$0	$758,952	$0		$3,211,952	$301,923	$0	$917,864	$4,431,740	$5
	SUBTOTAL 3.	**$51,855,567**	**$1,020,009**	**$23,044,685**	**$991,321**	**$0**	**$76,911,582**	**$7,229,689**	**$432,465**	**$14,869,207**	**$99,442,943**	**$114**
4	PC BOILER & ACCESSORIES											
4.1	PC Boiler & Accessories	$185,402,000	$0	$105,641,000	$0		$291,043,000	$27,358,042	$0	$31,840,104	$350,241,146	$403
4.2	SCR (w/4.1)	$0	$0	$0	$0		$0	$0	$0	$0	$0	$0
4.3	Open	$0	$0	$0	$0		$0	$0	$0	$0	$0	$0
4.4	Boiler BoP (w/ ID Fans)	$143,849	$0	$72,283	$84,854		$300,986	$28,293	$15,049	$51,649	$395,977	$0
4.5	Primary Air System	w/4.1	w/4.1	w/4.1	$0		$0	$0	$0	$0	$0	$0
4.6	Secondary Air System	w/4.1	w/4.1	w/4.1	$0		$0	$0	$0	$0	$0	$0
4.8	Major Component Rigging		w/4.1	w/4.1	$0		$0	$0	$0	$0	$0	$0
4.9	Boiler Foundations		w/14.1	w/14.1	$0		$0	$0	$0	$0	$0	$0
	SUBTOTAL 4.	**$185,545,849**	**$0**	**$105,713,283**	**$84,854**	**$0**	**$291,343,986**	**$27,386,335**	**$15,049**	**$31,891,753**	**$350,637,123**	**$403**

Table 1-15. Case 3 (PC + CEPACS) Capital Cost Estimate, 2011 USD (continued)

Acct		Equipment	Material	Labor		Sales	Bare Erected	Eng'g CM	Contingencies		TOTAL PLANT COST	
No.	Item/Description	Cost	Cost	Direct	Indirect	Tax	Cost, $	H.O. & Fee	Process	Project	$	$/kW
5	FLUE GAS CLEANUP											
5.1	Absorber Vessels & Accessories	$66,871,000	$0	$14,297,000	$0		$81,168,000	$7,629,792	$0	$8,879,779	$97,677,571	$112
5.2	Other FGD	$18,872,563	$228,944	$4,878,430	$1,116,896		$25,096,833	$2,359,102	$883,992	$3,845,279	$32,185,206	$37
5.3	Bag House & Accessories	$20,961,036	$367,783	$13,352,162	$1,739,929		$36,420,910	$3,423,566	$285,896	$4,340,102	$44,470,473	$51
5.4	Other Particulate Removal Materials	$2,440,330	$155,973	$1,730,650	$442,154		$4,769,107	$448,296	$107,055	$654,917	$5,979,375	$7
5.5	Gypsum Dewatering System	$3,293,000	$0	$555,467	$0		$3,848,467	$361,756	$0	$708,693	$4,918,916	$6
5.6	Mercury Removal System	$0	$0	$0	$0		$0	$0	$0	$0	$0	$0
5.7	Polishing FGD	$67,453,764	$0	$5,211,269	$6,117,577		$78,782,610	$7,405,565	$3,939,131	$13,519,096	$103,646,402	$119
5.9	Open	$0	$0	$0	$0		$0	$0	$0	$0	$0	$0
	SUBTOTAL 5.	**$179,891,693**	**$752,699**	**$40,024,979**	**$9,416,557**	**$0**	**$230,085,927**	**$21,628,077**	**$5,216,073**	**$31,947,866**	**$288,877,944**	**$332**
5B	CO_2 REMOVAL & COMPRESSION											
5B.1	CO_2 Removal System	$21,041,314	$104,104	$361,164	$423,976		$21,930,559	$2,061,473	$1,096,528	$3,763,284	$28,851,843	$33
5B.2	CO_2 Compression & Drying	$60,430,638	$915,397	$2,521,002	$2,959,437		$66,826,473	$6,281,688	$3,341,324	$11,467,423	$87,916,908	$101
	SUBTOTAL 5B.	**$81,471,953**	**$1,019,501**	**$2,882,166**	**$3,383,412**	**$0**	**$88,757,032**	**$8,343,161**	**$4,437,852**	**$15,230,707**	**$116,768,751**	**$134**
5C	Electrochemical Module											
5C.1	Electrochemical Module	$221,791,352	$20,092,585	$4,243,736	$4,981,777		$251,109,450	$23,604,288	$12,550,273	$43,089,602	$330,353,613	$380
5C.2	Electrochemical Module Civil	$0	$9,136,591	$5,159,591	$6,056,912		$20,353,094	$1,913,191	$1,017,655	$3,492,591	$26,776,531	$31
5C.3	Electrochemical Module Piping	$0	$0	$0	$0		$0	$0	$0	$0	$0	$0
	SUBTOTAL 5C	**$221,791,352**	**$29,229,176**	**$9,403,327**	**$11,038,689**	**$0**	**$271,462,544**	**$25,517,479**	**$13,567,928**	**$46,582,193**	**$357,130,144**	**$411**
6	COMBUSTION TURBINE/ACCESSORIES											
6.1	Combustion Turbine Generator	N/A		N/A			$0	$0	$0	$0	$0	$0
6.2	Open						$0	$0	$0	$0	$0	$0
6.3	Compressed Air Piping						$0	$0	$0	$0	$0	$0
6.4	Combustion Turbine Foundations						$0	$0	$0	$0	$0	$0
	SUBTOTAL 6.	**$0**	**$0**	**$0**	**$0**	**$0**	**$0**	**$0**	**$0**	**$0**	**$0**	**$0**
7	HRSG, DUCTING & STACK											
7.1	Heat Recovery Steam Generator	N/A	$0	N/A	$0		$0	$0	$0	$0	$0	$0
7.2	HRSG System	$0	$0	$0	$0		$0	$0	$0	$0	$0	$0
7.3	Ductwork	$10,572,000	$0	$6,673,000	$0		$17,245,000	$1,621,030	$0	$2,829,905	$21,695,935	$25
7.4	Stack	$10,513,000	$0	$6,110,000	$0		$16,623,000	$1,562,562	$0	$1,818,556	$20,004,118	$23
7.9	Duct & Stack Foundations	$0	$1,146,000	$1,361,000	$0		$2,507,000	$235,658	$0	$548,092	$3,290,750	$4
	SUBTOTAL 7.	**$21,085,000**	**$1,146,000**	**$14,144,000**	**$0**	**$0**	**$36,375,000**	**$3,419,250**	**$0**	**$5,196,553**	**$44,990,803**	**$52**
8	STEAM TURBINE GENERATOR											
8.1	Steam TG & Accessories	$66,640,000	$0	$8,221,000	$0	$0	$74,861,000	$7,036,934	$0	$8,189,192	$90,087,126	$104
8.2	Turbine Plant Auxiliaries	$418,000	$0	$890,000	$0	$0	$1,308,000	$122,952	$0	$142,666	$1,573,618	$2
8.3	Condenser & Auxiliaries	$9,455,639	$4,395	$2,752,517	$14,694	$0	$12,227,246	$1,149,361	$69,812	$1,424,880	$14,871,299	$17
8.4	Steam Piping	$21,119,000	$0	$9,383,000	$0	$0	$30,502,000	$2,867,188	$0	$5,004,820	$38,374,008	$44
8.9	TG Foundations	$0	$1,248,000	$2,060,000	$0	$0	$3,308,000	$310,952	$0	$723,579	$4,342,531	$5
	SUBTOTAL 8.	**$97,632,639**	**$1,252,395**	**$23,306,517**	**$14,694**	**$0**	**$122,206,246**	**$11,487,387**	**$69,812**	**$15,485,137**	**$149,248,582**	**$172**

Table 1-15. Case 3 (PC + CEPACS) Capital Cost Estimate, 2011 USD (continued)

Acct		Equipment	Material	Labor		Sales	Bare Erected	Eng'g CM	Contingencies		TOTAL PLANT COST	
No.	Item/Description	Cost	Cost	Direct	Indirect	Tax	Cost, $	H.O. & Fee	Process	Project	$	$/kW
9	COOLING WATER SYSTEM											
9.1	Cooling Towers	$14,201,000	$0	$4,392,182	$0	$0	$18,593,182	$1,747,759	$0	$1,568,577	$21,909,518	$25
9.2	Circulating Water Pumps	$2,937,000	$0	$185,325	$0	$0	$3,122,325	$293,499	$0	$254,229	$3,670,053	$4
9.3	Circ.Water System Auxiliaries	$601,000	$0	$80,000	$0	$0	$681,000	$64,014	$0	$74,430	$819,444	$1
9.4	Circ.Water Piping	$0	$5,062,000	$4,584,000	$0	$0	$9,646,000	$906,724	$0	$1,582,872	$12,135,596	$14
9.5	Make-up Water System	$545,000	$0	$701,000	$0	$0	$1,246,000	$117,124	$0	$204,351	$1,567,475	$2
9.6	Component Cooling Water Sys	$490,000	$0	$376,000	$0	$0	$866,000	$81,404	$0	$142,074	$1,089,478	$1
9.9	Circ.Water System Foundations & Structures	$0	$2,687,000	$4,463,000	$0	$0	$7,150,000	$672,100	$0	$1,564,420	$9,386,520	$11
	SUBTOTAL 9.	**$18,774,000**	**$7,749,000**	**$14,781,507**	**$0**	**$0**	**$41,304,507**	**$3,882,624**	**$0**	**$5,390,953**	**$50,578,084**	**$58**
10	ASH/SPENT SORBENT HANDLING SYS											
10.1	Ash Coolers	N/A	$0	N/A	$0	$0	$0	$0	$0	$0	$0	$0
10.2	Cyclone Ash Letdown	N/A	$0	N/A	$0	$0	$0	$0	$0	$0	$0	$0
10.3	HGCU Ash Letdown	N/A	$0	N/A	$0	$0	$0	$0	$0	$0	$0	$0
10.4	High Temperature Ash Piping	N/A	$0	N/A	$0	$0	$0	$0	$0	$0	$0	$0
10.5	Other Ash Recovery Equipment	N/A	$0	N/A	$0	$0	$0	$0	$0	$0	$0	$0
10.6	Ash Storage Silos	$711,000	$0	$2,176,000	$0	$0	$2,887,000	$271,378	$0	$315,838	$3,474,216	$4
10.7	Ash Transport & Feed Equipment	$4,725,000	$0	$4,684,000	$0	$0	$9,409,000	$884,446	$0	$1,029,345	$11,322,791	$13
10.8	Misc. Ash Handling Equipment	$0	$0	$0	$0	$0	$0	$0	$0	$0	$0	$0
10.9	Ash/Spent Sorbent Foundation	$0	$161,000	$198,000	$0	$0	$359,000	$33,746	$0	$78,549	$471,295	$1
	SUBTOTAL 10.	**$5,436,000**	**$161,000**	**$7,058,000**	**$0**	**$0**	**$12,655,000**	**$1,189,570**	**$0**	**$1,423,732**	**$15,268,302**	**$18**
11	ACCESSORY ELECTRIC PLANT											
11.1	Generator Equipment	$1,943,000	$0	$311,000	$0	$0	$2,254,000	$211,876	$0	$246,588	$2,712,464	$3
11.2	Station Service Equipment	$3,314,000	$0	$1,111,000	$0	$0	$4,425,000	$415,950	$0	$484,095	$5,325,045	$6
11.3	Switchgear & Motor Control	$3,803,000	$7,826,469	$1,240,234	$679,971	$0	$13,549,674	$1,273,669	$454,284	$2,047,721	$17,325,349	$20
11.4	Conduit & Cable Tray	$0	$3,732,780	$8,563,931	$161,919	$0	$12,458,630	$1,171,111	$71,232	$2,055,046	$15,756,019	$18
11.5	Wire & Cable	$0	$4,966,000	$8,877,000	$0	$0	$13,843,000	$1,301,242	$0	$2,271,704	$17,415,946	$20
11.6	Protective Equipment	$306,000	$0	$1,063,000	$0	$0	$1,369,000	$128,686	$0	$149,309	$1,646,995	$2
11.7	Standby Equipment	$1,498,000	$0	$35,000	$0	$0	$1,533,000	$144,102	$0	$167,820	$1,844,922	$2
11.8	Main Power Transformers	$9,896,000	$13,291,827	$1,319,526	$1,307,182	$0	$25,814,535	$2,426,566	$785,627	$3,801,693	$32,828,421	$38
11.9	Electrical Foundations	$0	$359,000	$913,000	$0	$0	$1,272,000	$119,568	$0	$278,314	$1,669,882	$2
	SUBTOTAL 11.	**$20,760,000**	**$30,176,076**	**$23,433,691**	**$2,149,072**	**$0**	**$76,518,839**	**$7,192,771**	**$1,311,142**	**$11,502,291**	**$96,525,043**	**$111**
12	INSTRUMENTATION & CONTROL											
12.1	PC Control Equipment	w/12.7	$0	w/12.7	$0	$0	$0	$0	$0	$0	$0	$0
12.2	Combustion Turbine Control	N/A	$0	N/A	$0	$0	$0	$0	$0	$0	$0	$0
12.3	Steam Turbine Control	w/8.1	$0	w/8.1	$0	$0	$0	$0	$0	$0	$0	$0
12.4	Other Major Component Control	$0	$1,358,773	$326,666	$383,478	$0	$2,068,918	$194,478	$103,446	$355,026	$2,721,868	$3
12.5	Signal Processing Equipment	w/12.7	$0	w/12.7	$0	$0	$0	$0	$0	$0	$0	$0
12.6	Control Boards,Panels & Racks	$528,000	$0	$323,000	$0	$0	$851,000	$79,994	$0	$139,649	$1,070,643	$1
12.7	Distributed Control System Equipment	$5,331,000	$3,260,983	$951,000	$0	$0	$9,542,983	$897,040	$163,049	$1,246,835	$11,849,908	$14
12.8	Instrument Wiring & Tubing	$3,214,000	$0	$5,849,000	$0	$0	$9,063,000	$851,922	$0	$1,487,238	$11,402,160	$13
12.9	Other I & C Equipment	$1,506,000	$0	$3,488,000	$0	$0	$4,994,000	$469,436	$0	$546,344	$6,009,780	$7
	SUBTOTAL 12.	**$10,579,000**	**$4,619,756**	**$10,937,666**	**$383,478**	**$0**	**$26,519,901**	**$2,492,871**	**$266,495**	**$3,775,093**	**$33,054,359**	**$38**

Table 1-15. Case 3 (PC + CEPACS) Capital Cost Estimate, 2011 USD (continued)

Acct No.	Item/Description	Equipment Cost	Material Cost	Labor Direct	Labor Indirect	Sales Tax	Bare Erected Cost, $	Eng'g CM H.O. & Fee	Contingencies Process	Contingencies Project	TOTAL PLANT COST $	TOTAL PLANT COST $/kW
13	IMPROVEMENTS TO SITE											
13.1	Site Preparation	$0	$4,170,569	$2,551,012	$1,591,840	$0	$8,313,421	$781,462	$353,121	$1,486,263	$10,934,268	$13
13.2	Site Improvements	$0	$3,850,437	$6,035,899	$4,193,099	$0	$14,079,436	$1,323,467	$487,522	$2,619,948	$18,510,372	$21
13.3	Site Facilities	$3,342,000	$0	$3,506,000	$0	$0	$6,848,000	$643,712	$0	$1,497,932	$8,989,644	$10
	SUBTOTAL 13.	**$3,342,000**	**$8,021,007**	**$12,092,911**	**$5,784,939**	**$0**	**$29,240,857**	**$2,748,641**	**$840,643**	**$5,604,143**	**$38,434,284**	**$44**
14	BUILDINGS & STRUCTURES											
14.1	Boiler Building	$0	$9,922,000	$8,719,000	$0	$0	$18,641,000	$1,752,254	$0	$4,078,651	$24,471,905	$28
14.2	Turbine Building	$0	$14,171,000	$13,198,000	$0	$0	$27,369,000	$2,572,686	$0	$5,988,337	$35,930,023	$41
14.3	Administration Building	$0	$703,000	$742,000	$0	$0	$1,445,000	$135,830	$0	$316,166	$1,896,996	$2
14.4	Circulation Water Pumphouse	$0	$201,000	$160,000	$0	$0	$361,000	$33,934	$0	$78,987	$473,921	$1
14.5	Water Treatment Buildings	$0	$678,000	$618,000	$0	$0	$1,296,000	$121,824	$0	$283,565	$1,701,389	$2
14.6	Machine Shop	$0	$470,000	$315,000	$0	$0	$785,000	$73,790	$0	$171,758	$1,030,548	$1
14.7	Warehouse	$0	$318,000	$319,000	$0	$0	$637,000	$59,878	$0	$139,376	$836,254	$1
14.8	Other Buildings & Structures	$0	$6,469,537	$3,331,892	$3,651,916	$0	$13,453,345	$1,264,614	$648,617	$2,331,297	$17,697,874	$20
14.9	Waste Treating Building & Str.	$0	$498,000	$1,511,000	$0	$0	$2,009,000	$188,846	$0	$439,569	$2,637,415	$3
	SUBTOTAL 14.	**$0**	**$33,430,537**	**$28,913,892**	**$3,651,916**	**$0**	**$65,996,345**	**$6,203,656**	**$648,617**	**$13,827,706**	**$86,676,324**	**$100**
15	Piping and Ductwork											
15.1	Piping and Ductwork	$0	$53,138,243	$56,526,483	$66,357,176	$0	$176,021,902	$16,546,059	$8,801,095	$30,205,358	$231,574,414	$266
	SUBTOTAL 15.	**$0**	**$53,138,243**	**$56,526,483**	**$66,357,176**	**$0**	**$176,021,902**	**$16,546,059**	**$8,801,095**	**$30,205,358**	**$231,574,414**	**$266**
	TOTAL COST	**$928,862,751**	**$174,915,323**	**$383,570,395**	**$103,272,787**	**$0**	**$1,590,621,256**	**$149,518,398**	**$35,625,275**	**$241,883,138**	**$2,017,648,067**	**$2,321**
	Owner's Costs											
	Preproduction Costs											
	6 Months All Labor										$9,564,707	$11
	1 Month Maintenance Materials										$1,941,757	$2
	1 Month Non-fuel Consumables										$1,679,317	$2
	1 Month Waste Disposal										$364,000	$0
	Operator Training/Plant Personel Project Support										$87,208	$0
	25% of 1 Months Fuel Cost at 100% CF										$5,329,534	$6
	2% of TPC										$40,352,961	$46
	Total										**$59,319,485**	**$68**
	Inventory Capital											
	60 day supply of fuel and consumables at 100% CF										2347063418.9%	$27
	0.5% of TPC (spare parts)										$10,088,240	$12
	Total										**$33,558,875**	**$39**
	Initial Cost for Catalyst and Chemicals										207893162.7%	$2
	Land										95183839.4%	$1
	Other Owner's Costs										$302,647,210	$348
	Financing Costs										$54,476,498	$63
	Total Overnight Costs (TOC)										**$2,470,680,905**	**$2,842**
	TASC Multiplier										1.140	
	Total As-Spent Cost (TASC)										**$2,816,576,231**	**$3,240**

1.1.6.2 Case 3 Cost of Electricity and Cost of CO2 Capture Analysis

The cost of electricity was estimated based on the NETL cost estimation methodology guidelines [3], incorporating capital and operating costs for the coal fueled (non-CEPACS) portion of the system from Case 11 in the Updated Costs for Bituminous Coal Cases report [6]. Additional information has also been included in Section 1.1 of this report. Table 1-16 and Table 1-17 show the Fixed (OC_{FIX}) and Variable (OC_{VAR}) operating costs, respectively, for the CEPACS system.

The estimates were developed by AECOM in a combination of 2012 and 2013/14 dollars and de-escalated to 2011 dollars. Dollar year basis for estimates are listed for each account (e.g.: fixed operating costs in 2012 USD, variable operating costs in 2014 USD, etc.). The rate of $65/h for the operating and maintenance labor cost includes Administrative and Support costs (overhead and G&A). All variable costs were estimated as a function of the capacity factor.

Table 1-16. Fixed Operating Costs for CEPACS System

Parameter	Annual Cost	Notes
Annual Operating Labor Cost/ Maintenance Labor Cost	$ 2,818,400	2 operators + 2 assistants for each shift. 4 maint. staff on day shift. Rate = 65$/h.
Property Taxes and Insurance	$ 363,175	$995 / calendar day
Total CEPACS Fixed Annual Operating Costs (OC_{FIX}) 2012 USD	**$ 3,181,575**	
Total CEPACS Plant OC_{FIX}, 2011 USD	$ 3,088,908	Discount using PV=FV/(1+i)^n, i=3%, n=1
Total PC Plant (Case 11) OC_{FIX}, 2011 USD	$ 38,828,811	
Total Case 3 (PC + CEPACS) OC_{FIX}, 2011 USD	**$ 41,917,719**	

Table 1-17. Variable Operating Costs for CEPACS System

Parameter	Initial Fill Cost	Operating Hours	Replacement Cost	Annual Cost
Maintenance Material Cost				$ 10,177,240
Consumables				
Consumables, Limestone				$ 114,750
Process Water (generation credit)				$ (24,339)
Others - Catalysts				
Sorbent - Desulfurizers	$ 2,481,070	9686 hrs	$ 1,240,534	$ 912,330
ECM Stack Replacement	$ 208,284,544	10 years	$ 322,841,043	$ 10,761,368.1
Total CEPACS Variable Annual Operating Costs (OC_{VAR}) 2014 USD				**$ 21,941,349**
Total CEPACS Plant OC_{VAR}, 2011 USD				$ 19,732,589
Total PC Plant (Case 11) OC_{VAR}, 2011 USD				$ 31,688,385
Total Case 3 (PC + CEPACS) OC_{VAR}, 2011 USD				**$ 51,420,974**

Table 1-18 shows the cost of electricity and cost of carbon dioxide captured and avoided (on a 2011 USD cost basis) for Case 3 (PC + CEPACS-based CO_2 capture) as compared to Case 1 (PC w/o CO_2 capture) and Case 2 (PC w/ Amine-based CO_2 capture). The estimated COE for Case 3 is 101.8 mills/kWh and the cost of CO_2 captured is $34.00/tonne. The cost of CO_2 avoided was estimated to be $27.49/tonne for Case 3.

Table 1-18. Case 3 (PC Case 11 + CEPACS) COE and Cost of CO_2 Captured, Compared to Cases 1 and 2

	Case 1 PC	Case 2 PC w/ Amine CO_2 cap.	Case 3 PC + CEPACS
TOC	$ 1,348,443,000	$ 2,414,734,000	$ 2,470,680,905
Capital Charge Factor (CCF)	11.65%	12.43%	12.43%
OC_{FIX}	$ 38,828,811	$ 64,137,607	$ 41,917,719
OC_{VAR}	$ 31,688,385	$ 54,089,231	$ 51,420,974
Capacity Factor (CF)	85%	85%	85%
MW,net	549.990	549.960	869.178
Coal Usage, tons/day	4,914	6,790	4,914
Gas Usage, MMBTU/day	--	--	60,153
CO_2 TS&M, $/Ton	--	$ 9.070	$ 9.070
CO_2 Captured, tons/year	--	4,496,312	4,335,350
Cost of Electricity			
Capital	38.4	73.3	47.5
Fixed OCs	9.5	15.7	6.5
Variable OCs	7.7	13.2	7.9
Fuel Cost	25.5	35.3	33.8
CO_2 TS&M	0	10.0	6.1
COE, mills/kWh (2011 Cost Basis)	**81.1**	**147.4**	**101.8**
COE % Reduction from Baseline (Amine) Case	**--**	**0.0%**	**-31.0%**
Levelized COE, mills/kWh	102.9	186.9	129.1
Cost of CO_2 Capture			
Cost per ton of CO_2 captured, (2011$)		**$ 60.25**	**$ 30.85**
Cost per ton of CO_2 Avoided, (2011$)		**$ 87.02**	**$ 24.95**
Cost per tonne of CO_2 captured, (2011$)		**$ 66.40**	**$ 34.00**
Cost per tonne of CO_2 Avoided, (2011$)		**$ 95.90**	**$ 27.49**

1.1.6.3 Sensitivity Analysis

Sensitivity analyses were performed to forecast the impact of two parameters of the plant design on the Case 3 COE. The parameters studied included:

1. Additional capital cost to install a branch pipeline from a Natural Gas (NG) transmission line to the plant covering distances between 0 and 50 miles in 10 mile increments.
2. Price of Natural Gas fuel to the plant in the range of $1/MMBTU to $8/MMBTU.

1. Effect of Natural Gas Transmission Line Distance on COE

This sensitivity analysis explores the impact of additional capital cost charged to the project for installation of natural gas supply to the plant boundary. For this analysis, the delivered natural gas price was held constant at $6.13/MMBTU (as mentioned in Table 1-4). It is FCE's belief that the cost of additional natural gas supply infrastructure will likely be borne by the gas supplier and reflected in the delivered price. The sensitivity analysis for the effect of natural gas price on COE shows the impact for this scenario.

The impact of distance between the CEPACS-equipped PC Plant and the nearby NG transmission line on Case 3 COE is shown in Table 1-16. The per mile installation cost for the connecting NG line was based on an average of costs for the installation of 36" diameter steel pipe that have been published during the period from 2009 to 2015 [7].

The installation cost for a 10 to 50 mile distance (length) will impact the COE, changing the % deduction relative to Case 2 from -31% to -27.2%. It is important to note that an equivalent of 412.5 miles of pipe (an additional $2.38 billion in capital costs) can be installed for the CEPACS plant using this cost basis before exceeding the COE for Case 2.

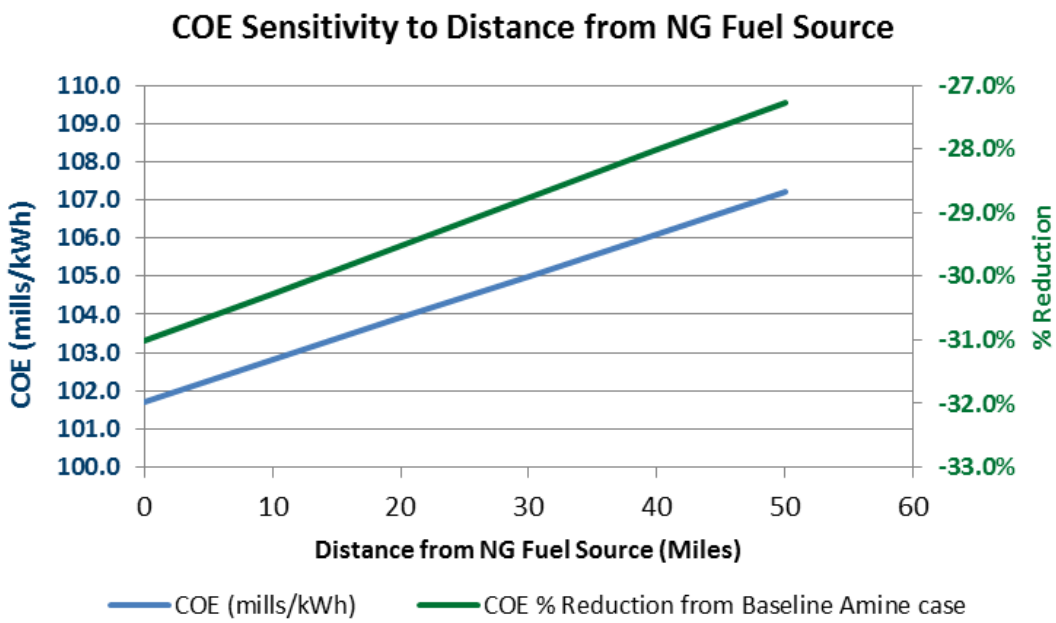

Figure 1-16. Case 3 COE Sensitivity to Natural Gas Transmission Pipeline Distance from CEPACS-equipped PC Plant

2. Effect of Natural Gas Price on COE

The impact of natural gas fuel price on the Case 3 COE is significant and is shown in Table 1-17. The price range studied was established based on the historical range for natural gas price from 2007 through 2015 [8].

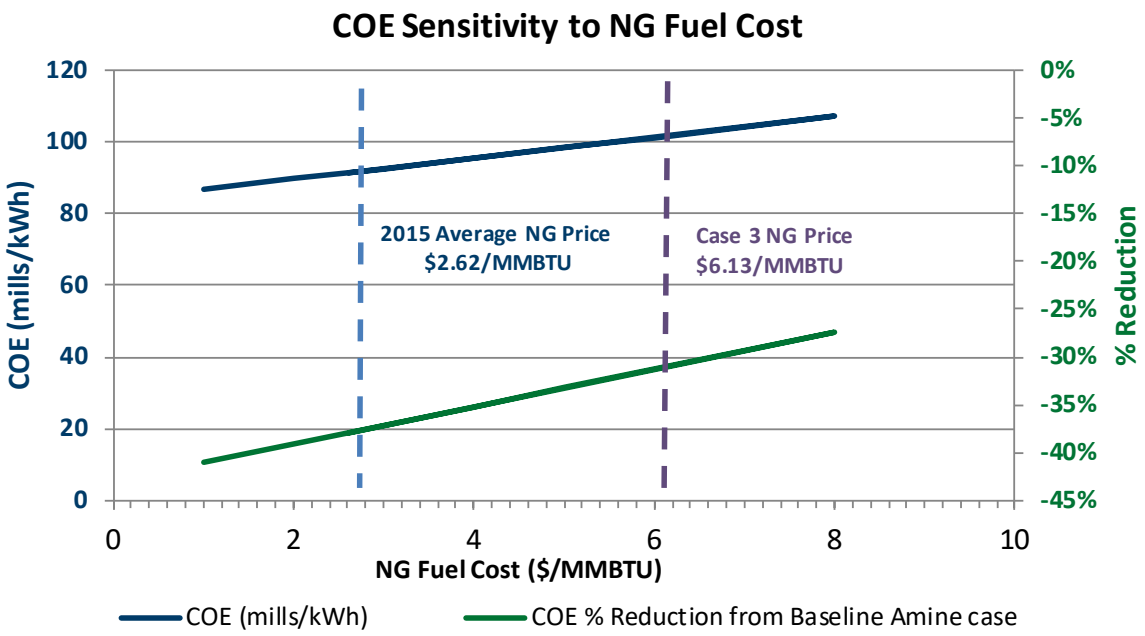

Figure 1-17. Case 3 COE Sensitivity to Natural Gas Fuel Price

The natural gas price used for the economic analysis with the 2011 cost basis is $6.13/MMBTU. The average price for 2015 is reported to be $2.62/MMBTU. In 2011 dollars the equivalent price is $2.27/MMBTU.

The sensitivity analysis showed that using the recent (2015) natural gas price ($2.27/MMBTU, 2011 dollar basis) would reduce the COE by 10.9% to 90.6 mills/kWh and increase the % COE reduction from Case 2 by 7.5% to -38.5%.

3. Effect of Natural Gas Price on Cost of CO2 Captured and Cost of CO2 Avoided

The impact of the natural gas price on the Cost of CO_2 Captured and Cost of CO_2 Avoided for Case 3 is shown in Table 1-18.

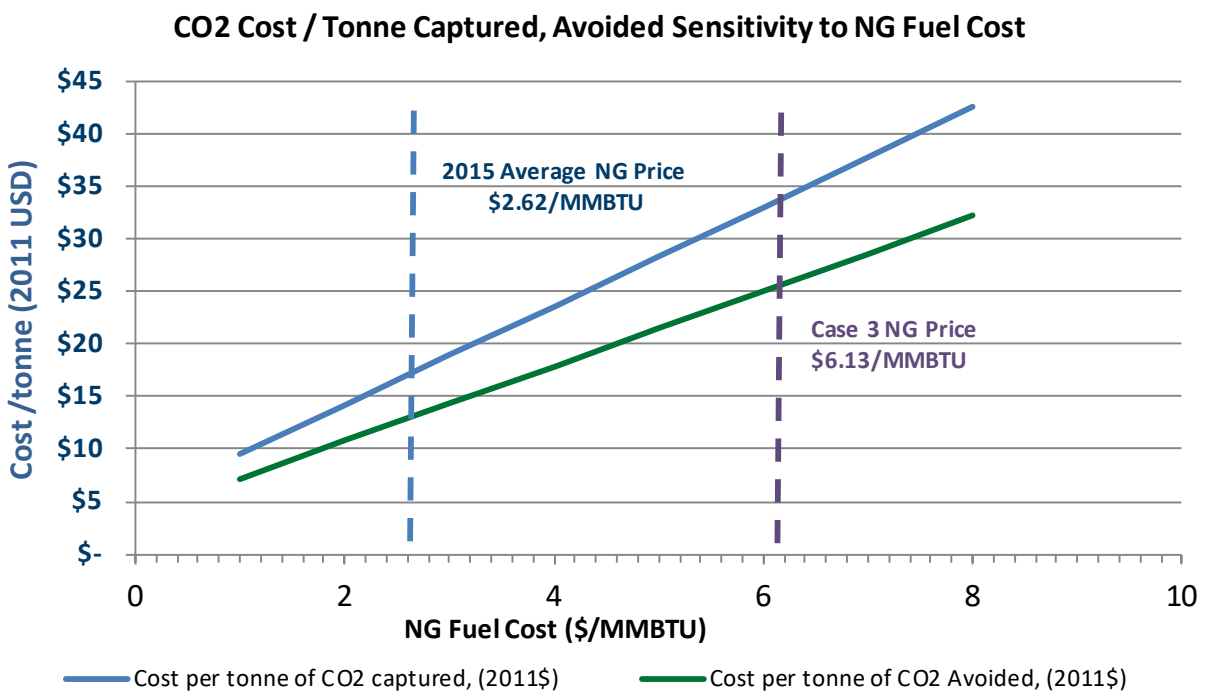

Figure 1-18 . Case 3 Costs of CO_2 Captured and CO_2 Avoided - Sensitivity to Natural Gas Fuel Price

The sensitivity analysis showed that using the recent (2015) NG price ($2.27/MMBTU, 2011 dollar basis) would reduce the Cost of CO_2 Captured by 58.3% to $14.19/tonne and the cost of CO_2 Avoided by 60.9% to $10.74/tonne.

1.2 Environmental Health and Safety Assessment

1.2.1 Process Emissions Review

1.2.1.1 Gaseous or Air Emissions

The environmental performance was estimated for the PC plant (Case 11 of DOE-NETL Report) equipped with the CEPACS system based on a total gross power output of 977 MW (869 MW net) and is presented in Table 1-19. The reported emissions include the greenhouse gas (CO_2) emissions and emissions of the individual pollutants such as SO_2, NO_x, Hg and Particulates.

Carbon dioxide emitted with the plant exhaust (ECM cathode side) represents CO_2 in the flue gas which is not captured by the ECM stacks. This is reported as a mass flow per net power. The percentage of CO_2 captured exceeds the 90% capture level minimum. Figure 1-19 shows the normalized emission rates of CO_2 calculated for the three (system) cases defined in Table ES-1 earlier. Case 3 (PC + CEPACS) has the lowest CO_2 emissions of all the cases. This is due to the design criteria to capture 90% of the carbon which enters the CEPACS system. Since the CEPACS system generates additional power, the CO_2 emissions (normalized by total plant net output) are ~55% lower than for Case 2 (PC plant equipped with competing amine absorber based CO_2 capture technology). Case 1 relates to emissions of the baseline PC plant not equipped with the CO_2 capture system.

Table 1-19. Air Emissions for 550 MW PC Plant Equipped with CEPACS System

	kg/GJ (lb/MMBtu)		Tonne/year (ton/year) 85% CF		kg/MWh (lb/MWh)	
SO_2	**0.0003**	**(0.0006)**	**15**	**(16)**	**0.002**	**(0.0045)**
NO_x	**0.007**	**(0.015)**	**377**	**(416)**	**0.052**	**(0.1143)**
Particulates	**0.002**	**(0.004)**	**105**	**(116)**	**0.014**	**(0.0318)**
Hg	**0.0000**	**(0.000)**	**0.018**	**(0.020)**	**2.54E-06**	**(5.60E-06)**
CO_2	**5.7**	**(13.3)**	**326,287**	**(359,666)**	**45**	**(99)**
CO_2[1]					**50**	**(111)**

[1] CO_2 Emissions Based on Net Plant Output

US EPA NSPS Air Toxics Standards (MATS) Limits

Constituent	lb/MWh	kg/MWh
SO_2	**1.0**	**0.45**
NOx	**0.7**	**0.32**
PM	**0.09**	**0.04**

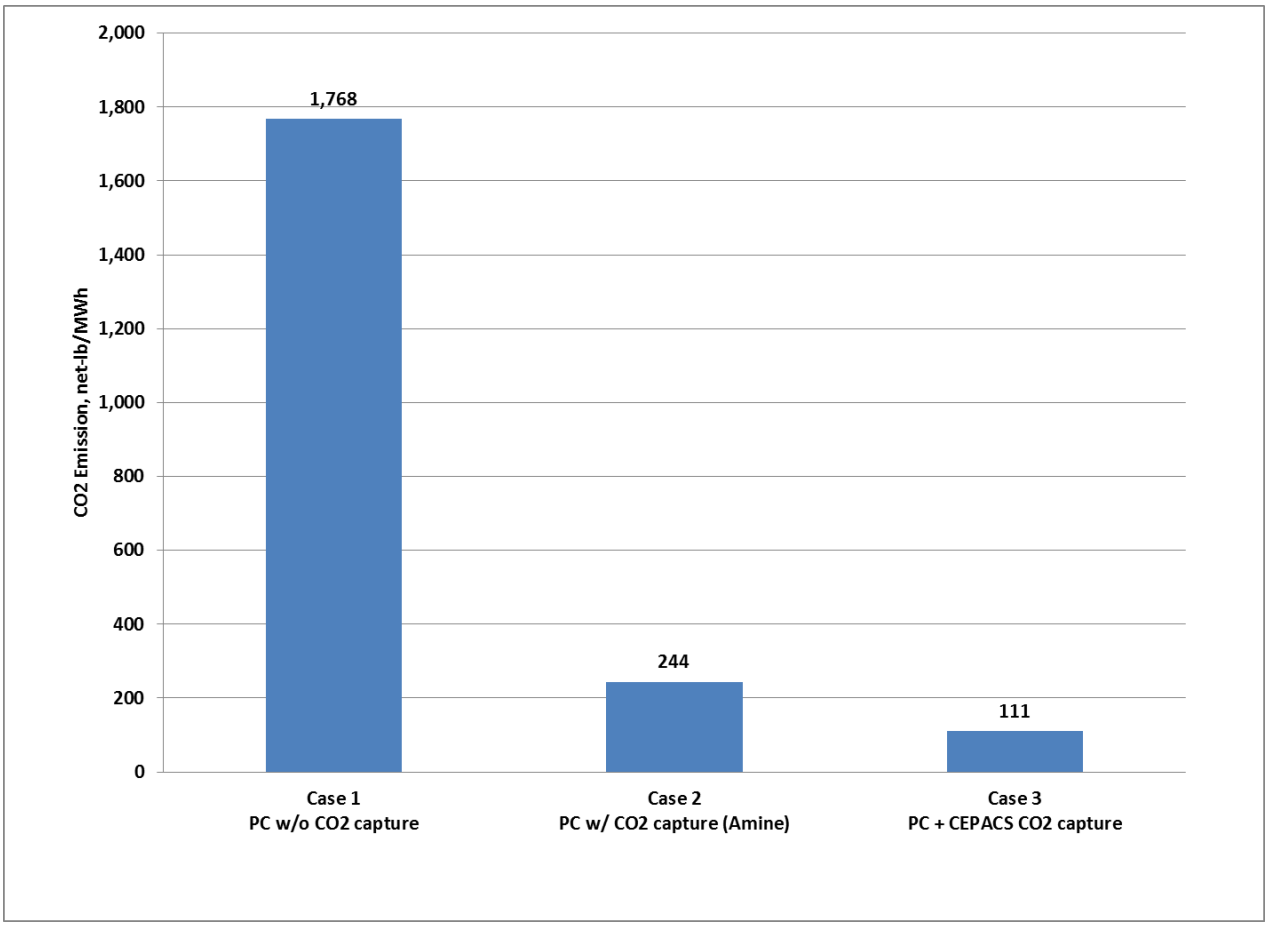

Figure 1-19. CO_2 Emission Rates

The primary and the polishing SO_2 scrubber units (FGD) reduce the SO_2 level in the flue gas (fed to the ECM cathode) to 0.3 ppm_v. The SO_2 which is not removed by the primary (1st) Wet Limestone Scrubber and the CEPACS Polishing Wet Limestone scrubber (2nd) is emitted to the environment. All sulfur is reported as SO_2. Sulfur in the natural gas fuel (supplemental fuel for ECM anode feed) is adsorbed and captured by the fuel desulfurizer sorbent.

The NOx emissions correspond to the flue gas NO_2 and NO content which is not removed/converted by the ECM stacks. During normal power operation, ECM testing results have shown that >70% of the flue gas NO_x content is transferred across the membrane to the anode and reduced. No NOx emissions are created within the CEPACS system. The overall emission specific flow rate of 0.052 kg/MWh is a fraction of the emission limit of 0.32 kg/MWh set by the US EPA new source performance standards (NSPS) Mercury and Air Toxics Standards (MATS).

Particulate emissions account for the PC Plant flue gas particulate matter not removed by a combination of the PC plant baghouse and the two Wet Lime scrubbers (FGD) in series. These solids are removed at 99.8% removal efficiency. The remaining particulates exit with the CEPACS plant exhaust stream. The emission level is a fraction of the MATS limit of 0.014 kg/MWh.

Figure 1-20 shows the normalized emission rates of SO_2, NOx, and particulate matter (PM) calculated for the three (system) cases. NSPS MATS limits are also shown in the Figure. Case 3 has the lowest emission rates of SO_2, NOx, and PM of all the cases studied. Case 3 emission rates are significantly lower than those required by the NSPS MATS rules.

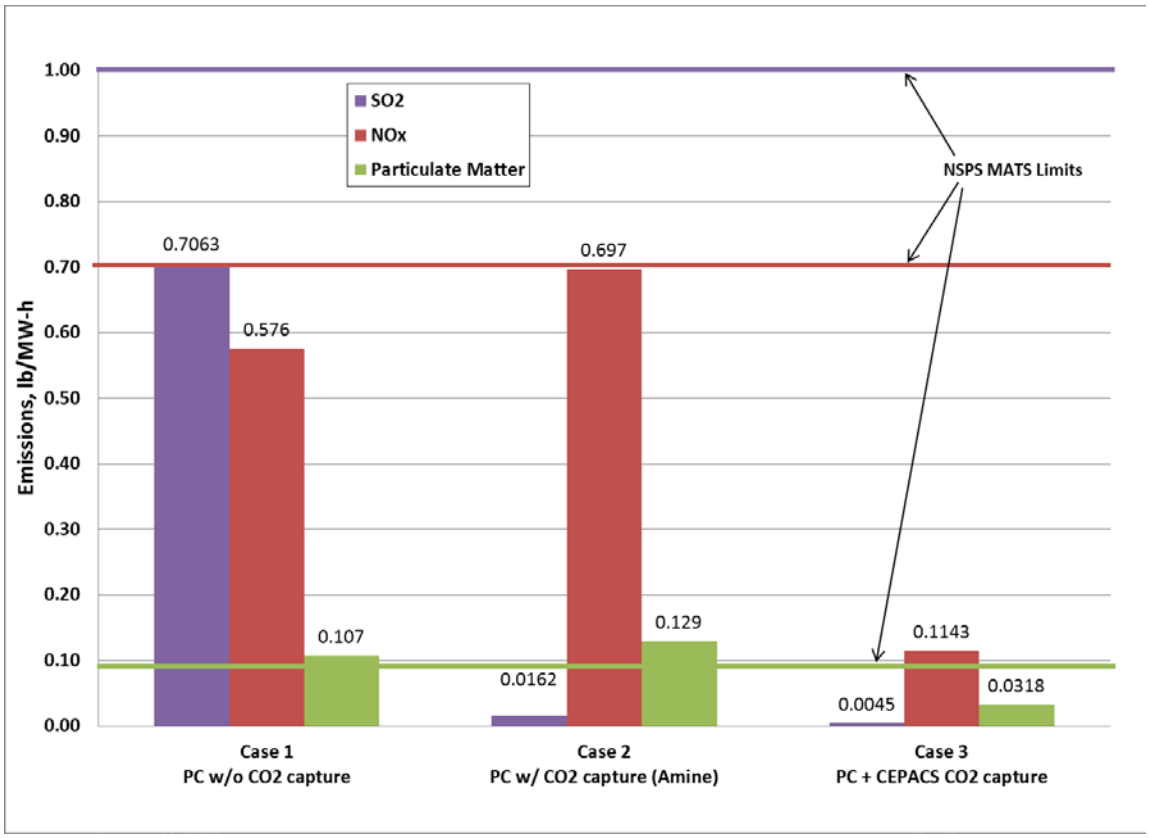

Figure 1-20. SO_2, NOx, and Particulate Emission Rates

Mercury (Hg) emissions represent the mercury content in the PC Plant flue gas which is not scrubbed out by the Primary wet lime scrubber (FGD) unit. This primary scrubber removes 90% of the Hg in the flue gas feed by wet lime impingement and conversion. No credit is taken for Hg removal in the downstream polishing scrubber (FGD). The mercury passes through the ECM cathode side, as verified by ECM contaminant evaluation testing. Figure 1-21 shows the normalized emission rates of mercury calculated for the three cases. Case 3 has lower Hg emissions than Cases 1 and 2, because a portion of the net power generation is fueled by natural gas which contains negligible amounts of Hg.

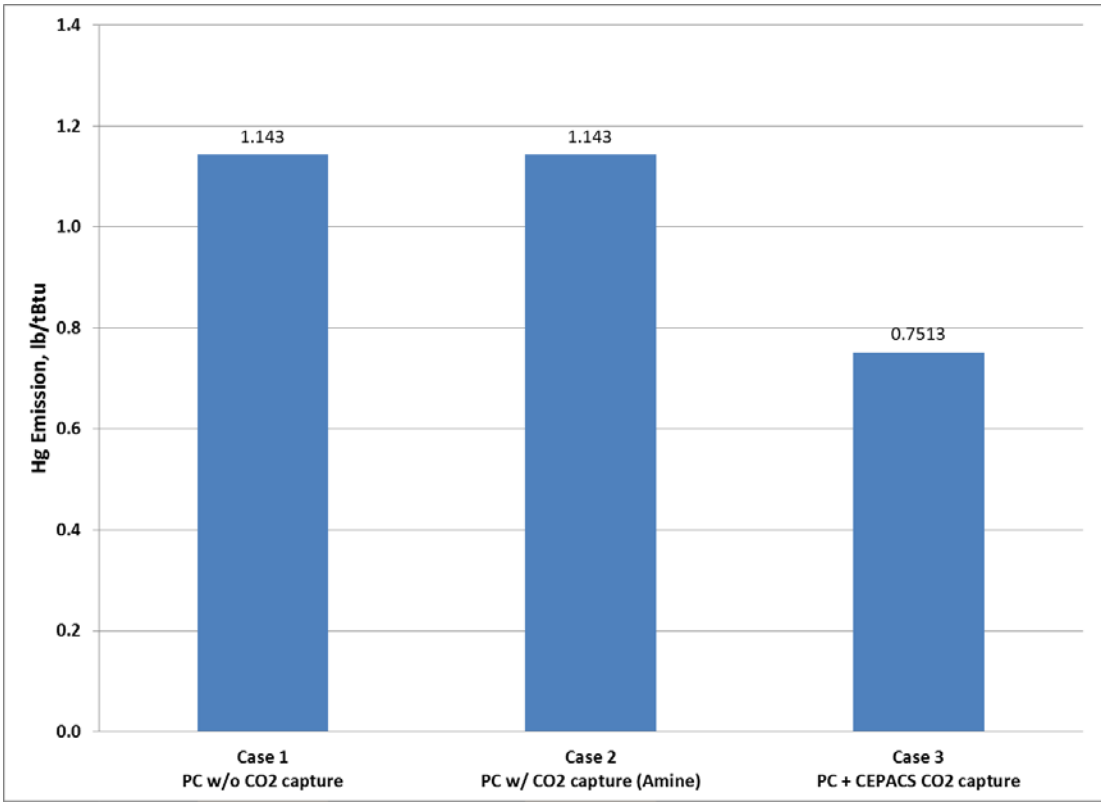

Figure 1-21. Mercury Emission Rates

1.2.1.2 Liquid (or Water) and Solid Emissions (including FGD Unit Related)

In this subsection, liquid or water emissions of the CEPACS plant in general are reviewed and discussed first, followed by the discussion of the liquid and solid emissions specific to the Polishing FGD unit.

Plant Water Balance and Liquid Emissions (Discharge)

Figure 1-22 and Table 1-20 shows the overall water balance for the 550 MW PC plant equipped with the CEPACS system (Case 3) and includes the water usage of the base PC plant. The table also presents a break-down including the major items. The CEPACS system (when in operation) is a net producer of clean process water which is sent to the PC plant for process use. CEPACS plant internal water consumption includes boiler water (steam) required for ECM fuel feed and quench water used upstream of the shift converter (LTSC).Because the CEPACS system (including the Polishing FGD) will be processing the PC plant flue gas, the heat duty /size of this cooling tower will be increased. The cooling water is used in CEPACS heat exchangers and chillers.

The primary exit water stream from the Cooling Tower will include the additional blowdown water proportional to the above-mentioned CEPACS heat exchanger cooling water loop load. A large fraction of the cooling tower blowdown water (500 gpm) is utilized as feed water to the Polishing FGD scrubber. This feature serves to reduce the net water withdrawal of the CEPACS system and also reduce the plant liquid discharge. Most of the scrubber feed water is consumed in making slurry and gypsum. The remaining portion of the cooling tower blowdown water (which is a small fraction of the cooling tower feed water) goes to the Waste Water clarifier.

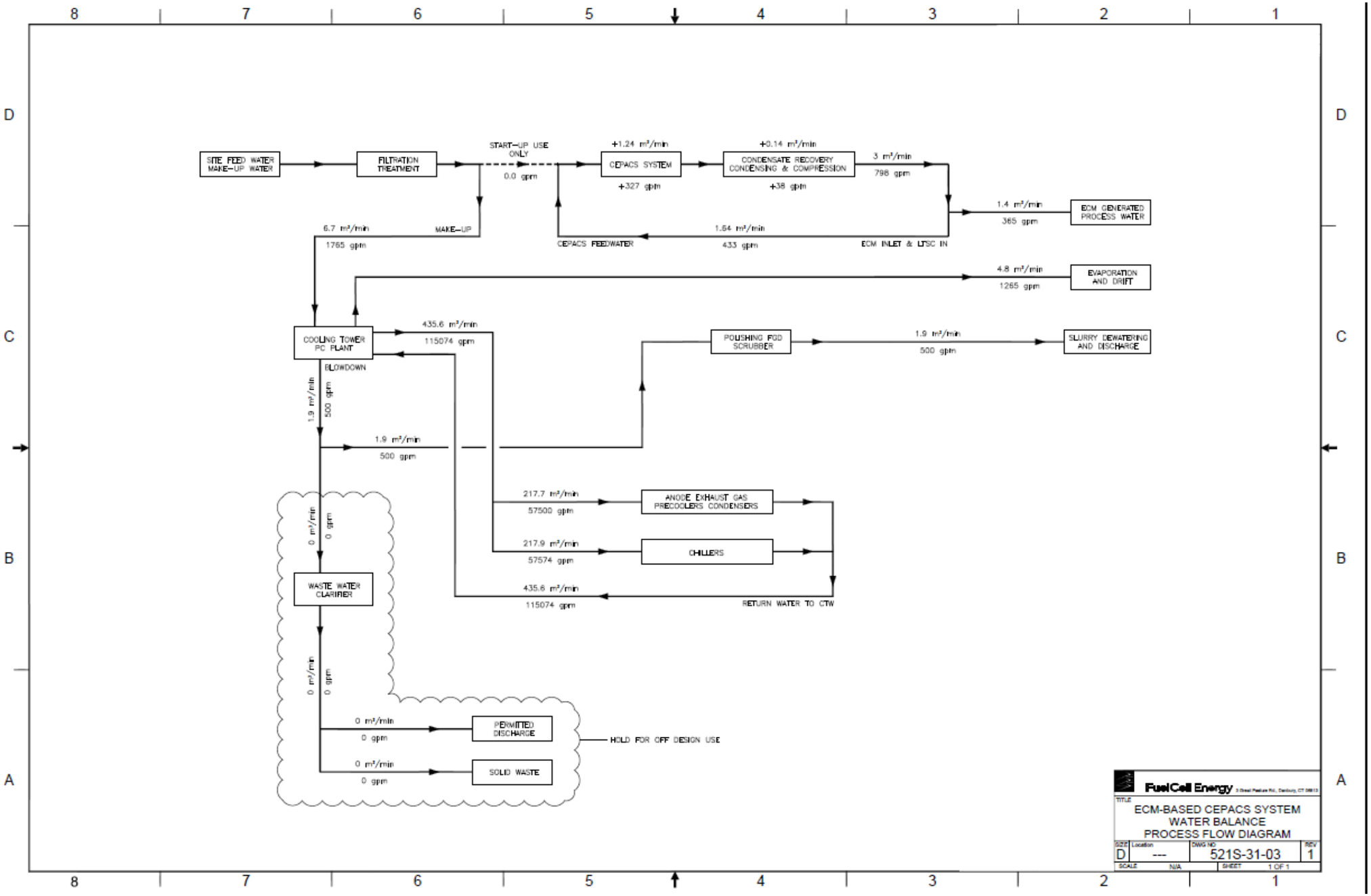

Figure 1-22. Water Block Flow Diagram for CEPACS System

Table 1-20. Water Balance for 550 MW PC Plant Equipped with CEPACS Plant

	Raw Water Withdrawal, m^3/min (gpm)	Process Water Discharge, m^3/min (gpm)	Raw Water Consumption, m^3/min (gpm)
Primary FGD Makeup	3.6 (951)	0.0 (0) Note 1	3.6 (951)
BFW Makeup	0.0 (0)	0.0 (0)	0.0 (0)
CEPACS Process	-1.4 (-365) Note 2	0.0 (0)	-1.4 (-365)
Cooling Tower & Polishing FGD	23.2 (6,135)	6.0 (1594) Note 1	17.2 (4,541)
Totals	**25.4 (6,721)**	**6.0 (1,594)**	**19.4 (5,127)**

Note 1: Polishing FGD utilizes blowdown from the cooling tower as feed water; no raw-source water is used. See CEPACS system water block diagram.
Note 2: Negative numbers designate water exported from (or produced by) the system.

Polishing FGD Unit and Related Liquid and Solid Emissions (Discharge and Solid Waste)

A discussion is presented here of the polishing FGD unit (which is part of the CEPACS system) related emissions and their handling along with the related process description. The polishing FGD will be located after the primary FGD scrubber. The polishing FGD will be a wet scrubber using limestone slurry to remove SO_2 from the flue gas. Gypsum is produced in a reaction tank which is a part of the FGD unit. The process description was included in Section 1.1.3.1. A bleed stream of gypsum slurry must be removed from the reaction tank to control density. The stream is sent to a dewatering system (discussed separately below) where the solids are directed to the same location as the gypsum produced in the primary FGD system. The limestone feed system and the gypsum dewatering system for the Polishing FGD are common to the primary FGD equipment.

The FGD water discharge is estimated to be 500 gpm. There will not be any evaporation in the polishing FGD, since it will be located downstream of the primary FGD and the flue gas is, therefore, cooled and saturated before reaching the polishing FGD. The discharge is sent to wastewater treatment (WWT), which helps control chlorides and heavy metals concentrations in dewatered gypsum byproduct (discussed further later in the section).

Dewatering System and Handling of Recovered Water: Dewatering mentioned above can be performed in several different ways. The common technologies used are:

- Horizontal Belt Filters (often in conjunction with hydro cyclones),
- Belt or Drum Filters
- Centrifuges.

The chosen technology depends on the requirements for the gypsum (calcium sulfate) byproduct. If wallboard quality gypsum is to be generated (i.e., less than 10% moisture), hydro cyclones followed by horizontal belt filters are used. If the produced gypsum is to be landfilled (~15% moisture), drum filters are used.

Although the polishing scrubber is as large as the primary scrubber (in order to achieve the required mass transfer and removal percentages), the polishing scrubber is removing a much smaller mass of SO_2 (2% of the SO_2 is removed in the polishing scrubber relative to the primary scrubber). Accordingly, the polishing scrubber adds only a small amount of slurry to the existing dewatering system (of the PC plant).

Water recovered from the dewatering system is commonly settled and ultimately discharged through a plant's wastewater outfall. Some contemporary designs employ zero liquid discharge (ZLD) systems where all liquid from the dewatering system is returned to the FGD scrubber for use in limestone grinding operation and/or as scrubber make-up water. However, returning all the water to the FGD system will increase the concentration of chlorides in the water (chlorides present in the flue gas are water soluble), making it necessary to evaluate the materials of construction for the FGD system. Oftentimes for ZLD systems, the FGD equipment must be modified and higher grade metal alloys used for construction that can tolerate higher chloride concentrations. Chlorides can be controlled through the removal of water from the system and using waste water treatment facilities to treat and discharge a portion of the dewatering system effluent, removing chlorides along with the water.

In short, water recovered from the FGD slurry is largely recycled back to the FGD system, with added design considerations for higher chloride concentrations. The water generated from the polishing scrubber is a small fraction (2%) of the water generated from the primary scrubber.

Heavy Metals and Their Disposal: The majority of heavy metals from the coal will be found in the fly ash, which is removed from the flue gas via particulate control (part of the PC plant). A percentage of the heavy metals will pass through particulate control to the primary FGD scrubber. Mercury is often found in scrubber slurries. Since oxidized mercury is water soluble, the majority of the oxidized mercury will be captured in the primary scrubber. Some unique characteristics may limit the removal of certain species of selenium. Hence, some selenium may pass through the primary scrubber to the polishing scrubber. In general, heavy metals are not anticipated at problematic concentrations in the polishing FGD scrubber because of their removal via particulate control, the water solubility of heavy metals, and the low relative removal of the polishing scrubber compared to the primary FGD scrubber.

In the event heavy metals originating from the coal used in PC plant are found in the FGD gypsum product, the resultant gypsum cannot be sold for reuse (i.e., wallboard manufacture) but instead must be landfilled appropriately.

Chloride-containing Waste Water and Related Handling: Chlorides present in the flue gas are water soluble and will be removed almost completely by the FGD scrubbers. In general, FGD systems do not generate high chloride waste streams (> 10,000 ppm). However, if high chloride levels resulting from severely reduced waste water discharge flow from the FGD scrubbers (approaching or reaching ZLD), are problematic, then additional treatment process using a brine concentrator or waste water evaporator would need to be employed.

Limestone Preparation and Related Handling: The polishing FGD scrubber will use a small slipstream of limestone reagent from the primary FGD scrubber (~2%). Therefore, no additional hazards are introduced by the use of limestone in the polishing scrubber. For the primary scrubber, limestone would be purchased pre-crushed. A majority of FGD systems grind limestone rock on-site. The most common grinding technique is to use a ball mill to reduce the limestone from a ~¾" rock to a 30 wt% solid (in water) limestone slurry (where 90% of the solid material can pass through a 325 mesh (44 micron) screen). The slurry is pumped to the FGD system. In addition to ball mills; tanks, hydro cyclones and pumps are a part of the limestone preparation system. The system is typically housed in a building. There are no specific handling requirements for the limestone or limestone slurry due to pH or other toxicity. The dust generation is minimal due to wet grinding.

1.2.2 Ancillary Emissions and Solid Wastes (from Consumables)

Ancillary emissions and solid waste may be generated periodically (not on a continuous basis). This may include sorbents used for gas clean-up, filter cartridges and materials used in the water

treatment system, and catalyst used in reactor vessels. Spent materials will need to be replaced with fresh charge of materials as part of the plant maintenance. A more detailed discussion including the handling of the materials, their properties and the regulatory requirements for the major categories follows.

1.2.2.1 Sulfur Sorbent Media

The sulfur adsorption media is an aluminosilicate zeolite impregnated with copper. It will be used for the desulfurization of the supplemental fuel fed to the CEPACS plant. The supplemental fuel is pipeline natural gas that is assumed to contain ~3 ppm_v of sulfur odorants (as mentioned in Section 1.1.4). Desulfurization will occur in two flow-through adsorption vessels arranged in series, each approximately 10' in diameter and containing a bed of granular media approximately 20' in depth. Natural gas desulfurization adsorbents become spent when they are sufficiently loaded with adsorbates such that they can no longer remove the target sulfur compounds down to the concentration required by the process. Recent advances in desulfurization media have dramatically increased both the adsorption capacity of the media as well as the selectivity of the absorbents for the target sulfur compounds. The total spent desulfurizer media quantity over the 30-year design life of the CEPACS plant is estimated to be 2004 tons, or ~67 tons/year. It is anticipated that the spent material will be generated two times each year at ~33 tons/event.

Current experience with natural gas desulfurization adsorbents is that when they are spent they exhibit hazardous characteristics and require management under Subtitle C of the Resource Conservation and Recovery Act. This fact, together with the media's relatively low metal (copper) content, reduces the prospects of cost-effective metal recovery. Metal market prices at the time of activity, however, will dictate the eventual management method for the waste/recyclable material. Should a viable and cost-effective method of material reclaiming be available for this material stream, it will be thoroughly evaluated. Some non-target adsorbates can be captured by the media (i.e., aromatic hydrocarbon species), which could impact the waste characterization of the spent media material.

OSHA hazcom and other General Industry Standards apply to this material/process as do EPA Tier II reporting and RCRA waste management rules and DOT Hazardous Material Rule (HMR) requirements. The desulfurizer media are not volatile, flammable or explosive. Prior to removal from the process, spent media is purged of flammable gas to render it non- flammable and safe to handle. Inert gas, nitrogen, is used to displace the natural gas from the sorbent bed.

If arrangements can be made with the utility company to provide the natural gas directly to the CEPACS plant without odorants, then the need for the desulfurization process could be eliminated or reduced, with a commensurate reduction in the generation rate and quantity of spent media.

1.2.2.2 Water Treatment System Discharge and Solid Waste

The water treatment systems employed in the plant include one for the boiler water and one for the cooling water. This subsection reviews the process and the chemicals used for the two categories of the water treatment systems. The discharge characteristics and related handling are discussed. A discussion on the solid waste related to the water treatment systems is also included.

Boiler Water Treatment and Blowdown: The control of boiler water quality includes both internal and external water treatments. External treatment includes filtration and softening to reduce the amount of particulates, chlorine, and hard minerals present in the boiler make-up water. The boiler makeup water, despite external treatment, may contain some oxygen and carbon dioxide. Since both carbon dioxide and oxygen can lead to corrosion, internal treatment with chemicals is used to reduce or eliminate these species from the system. During operation, corrosion products inside the boiler system become suspended in the water with some portion dissolving. Over time, these

impurities deposit inside the pipes and on other surfaces within the system leading to poor system performance. Internal treatment includes injection of chemicals into the boiler to maintain water quality and prevent the formation of scales on the heat transfer surfaces of the boiler. Table 1-21 gives examples of chemicals generally used in the treatment of boiler water for corrosion control.

Table 1-21. Chemicals Used in Boiler Water and Cooling Water Treatments

Treatment	Chemical Most Commonly Used	Typical Concentration	EH&S Related Comments
External Water Softening	Sodium Chloride	Saturated Solution (375 g/L)	No human health concern.
Water Softening and Dispersants	Phosphates	5 – 60 ppm	Environmental impacts include rapid plant and algae growth in bodies of water leading to death of aquatic species. Minimal human safety concerns as only very high concentrations are considered dangerous.
Anti-Scaling	Lignosulphonates	1-10 ppm	Skin, eye and respiratory tract irritation, no significant environmental risk.
pH Control	KOH or NaOH	0.5 ppm	Corrosive, can cause severe burns at high concentration.
Oxygen Scavengers	Sodium Sulfite.	10-60 ppm	Minor irritation, diarrhea, stomach-ache, no long term effects. No significant environmental risk.

The boiler system is closed loop and therefore under normal operation, blowdown is the only discharge of boiler water. In the discharge of boiler water through the blowdown process, the solids and other contaminants that have built up inside of the system are removed. The blowdown water is generally sent to the site's waste treatment system for further treatment before disposal. The site's final treatment generally includes pH neutralization, biological oxygen demand control and removal of suspended solids.

Cooling Water Treatment and Blowdown/Discharge: The treatment of cooling water includes chemical injection to control corrosion within the cooling system. Table 1-21 also includes examples of chemicals generally used in the treatment of cooling water for corrosion control. An additional concern with cooling water system is that bacteria can grow due to the relatively low temperature of the cooling water. Therefore treatment programs for controlling the growth of microorganisms are employed in addition to the corrosion treatment. Table 1-22 gives the chemicals most commonly used for controlling the growth of microorganisms in cooling water.

Table 1-22. Chemicals Used for Microorganism Growth Control

Biocide Type	Examples	Typical Concentration	EH&S Related Comments
Oxidizing Biocide	Chlorine, Bromine, Chlorine Dioxide	0.5 – 1.0 ppm	Environmentally unfriendly, toxic to plants and animals, Health and Safety - irritant at low concentrations, toxic at elevated concentrations.
Non-Oxidizing Biocides	Carbamates, quaternary ammonium compounds.	~100 ppm	Depending on biocide used can be toxic to humans. Potential environmental issues.

Just as in boiler operation, cooling system must also use a blowdown procedure to remove corrosion products and the buildup of other contaminants within the cooling system. The blowdown is sent to the facility's waste treatment system for further processing before disposal. Cooling water system includes a cooling tower through which discharge of gaseous substances and water occur in addition to the normal blowdown process. The most likely chemicals discharged through the cooling tower are chlorine and bromine, especially if the pH is low.

Solid Wastes: The CEPACS plant and external boiler-water and cooling water treatment systems include water softening beds. The beds contain cation exchange media which exchange sodium or potassium ions for other cationic species, such as calcium, magnesium and iron, to reduce the scale forming potential of the feed water. The softener media are regenerated in place using concentrated sodium or potassium chloride solution and the waste stream from the regeneration process is sent to the PC plant waste treatment system. Disposal of the media is expected to occur only at plant decommissioning.

Other sources of solid waste include treatment beds which use activated carbon to remove organics and chlorine from the feed water, granular media filtration beds, and filter cartridges. Maintenance of equipment such as carbon and media filtration beds includes backwashing to regenerate the beds rather than replacement. Therefore minimal generation of waste carbon and filter media is expected. Filter cartridges, on the other hand, need to be replaced every 3-4 months depending on the level of particles in the water and the water demand.

1.2.2.3 Low Temperature Shift Converter Catalyst

The Low Temperature Shift Converter (LTSC) Catalyst is required to shift the CO present in pre-cooled anode exhaust stream to produce additional hydrogen. It is a copper based catalyst containing 40-60% CuO (32-48% copper). The total quantity of LTSC Catalyst is estimated to be 72 tons. It is expected that the initial LTSC Catalyst charge will operate through the design life of the CEPACS plant. Also considering the clean conditions of exposure and the relatively high metal content of the catalyst, it is expected that spent catalyst material can be recycled to reclaim the metal content.

OSHA hazcom and other General Industry Standards apply to this material/process as do EPA Tier II reporting and RCRA waste management rules and DOT Hazardous Material Rule (HMR) requirements. The LTSC Catalyst is not anticipated to be volatile, flammable or explosive. The spent LTSC catalyst must be conditioned prior to discharge to prevent excessive catalyst heating upon exposure to air. Inert gas is used to displace shift gas, and prevent oxygen intrusion into the catalyst bed. Catalyst vendors provide detailed guidance on catalyst deactivation procedures and professional firms are available to perform the procedure. Following deactivation/conditioning, the spent LTSC catalyst can be safely removed and handled in accordance with routine methods.

1.2.2.4 ECM Stacks

The CEPACS plant uses 1,664 ECM stacks – 208 ECM stacks in each of 8 ECM module enclosures. The CEPACS plant has a design life of 30 years and the ECM stacks have a design life of 10 years. This requires that all the ECM stacks be replaced twice. The quantity of ECM stacks to be used over the life of the CEPACS plant will be 4,992. The material related composition of the ECM stacks is included in Table 1-23.

Table 1-23. Material Related Composition of ECM Stack

Material Class	Composition (%)	Weight (lb)
Stainless Steel	16.7	3010
Cell Packages	82.1	14772
Exotic Metals	0.4	76
Dielectrics	0.8	142
Total	100.0	18,000

The disposition for each material class is as follows:

Stainless steel: About 74% of the stainless steel parts from each spent ECM stack (2,237 lb.) are candidates for immediate reconditioning and reuse in replacement ECM stacks. Any parts that are unsuitable for reconditioning and reuse are 100% recyclable as high value stainless scrap metal. All of the remaining parts are 100% recyclable.

Exotic Metals: The exotic metal components are 100% recyclable as high value scrap metal.

Dielectrics: The dielectric components are all candidates for reconditioning and reuse. Broken or unusable dielectric components are disposed of.

Cell Packages: Cell packages are 100% recyclable. Cell package components are high in nickel and chromium content and, in the proper form, are valuable in the secondary metals market. Under carefully managed conditions, the spent ECM stacks can be disassembled into forms that are capable of being converted (melted down) into metal 'pigs' that can be used as ingredients in stainless steel manufacturing. Materials managed in this manner can be excluded from the definition of hazardous waste, or at best may even be excluded from the definition of solid waste. Due to high nickel and chromium content of the cell package components and the presence of some refractory material, the cell packages have a very high melting point, requiring the addition of ferrous metal 'bushing' into the foundry crucible during the melt process. The results of a trial melt of a spent fuel cell (ECM) stack, including added ferrous bushing, are provided in Table 1-24.

Table 1-24. Material Composition of Trial Melt of Used ECM Stack

Element	Composition (%)	Within Spec ?
Ni	27.5	Yes
Cr	6.3	Yes
Fe	63.6	Yes
Minor metals	< 2.0% (total)	Yes
Non-metals	< 0.8% (total)	Yes

Metal pigs of the above formulation are marketable in the secondary metals market. In summary, the material classes of the spent ECM stacks will be managed as shown in Table 1-25.

Table 1-25. Material Related Management of Used ECM Stack

Material Class	Composition (%)	% of material class reused	% of material class recycled	% of material class discarded
Stainless Steel	16.7	0-74	26 – 100	0
Cell Packages	82.1	0	100	0
Exotic Metals	0.4	0	100	0
Dielectrics	0.8	0-100	0	0 – 100

The primary environmental, health and safety regulations that impact the spent ECM stack management programs are the EPA Resource Conservation and Recovery Act (RCRA, Solid and Hazardous Waste regulations) and the OSHA General Industry Standards. RCRA regulates the correct management of spent material with emphasis on materials recovery versus waste disposal. The materials that comprise the ECM stacks are prime candidates for materials recovery. With the prudent and proper application of the RCRA regulations, very high rates of materials recovery can be realized.

1.2.3 Incidental Emissions/Releases

The CEPACS plant includes chillers used for post-processing of the CO_2-rich anode exhaust stream from ECM stacks. As mentioned in Section 1.1.3.3, the cooled shifted anode gas stream is chilled and compressed in stages to liquefy CO_2 before flash separation to near pure CO_2 product stream. The chiller units use a closed-loop of ammonia or other refrigerant. Also, the CEPACS plant includes a Polishing FGD unit for removal of SO_x from the flue gas to levels required for suitable operation of ECM stacks. As mentioned in Section 1.1.3.1, lime slurry is prepared and fed to the FGD unit and gypsum is produced as a byproduct. Incidental emission or release of ammonia (refrigerant) and lime or gypsum-related emissions are reviewed in this section. Information on handling, properties and regulatory requirements is also included in the subsections that follow.

1.2.3.1 Ammonia or Other Refrigerants

Ammonia (NH_3) is a refrigerant (R-717) required by the CEPACS system. The CEPACS process uses two stages of absorption chillers to condense the CO_2. The ammonia is contained in a closed loop that circulates through the chiller units. Discussions with vendors indicated that the technology is reliable and essentially leak-free. The estimated total charge of ammonia in the chillers to provide the required cooling capacity for the CEPACS process is 36 tons. It is estimated that the initial refrigerant fill will be used for the design life of the plant.

At atmospheric conditions, ammonia is a toxic and potentially flammable gas. It poses an inhalation hazard at concentrations above 25 – 50 parts per million (ppm) and is a respiratory irritant. It is considered Immediately Dangerous to Life and Health at concentrations above 500 ppm. Ammonia is flammable at concentrations in the range of 16- 25% in air. It is highly soluble in water.

Ammonia is a commonly used industrial refrigerant gas. Industrial processes that contain more than 10,000 pounds of ammonia are subject to the provisions of the Occupational Safety and Health Administration's general industry standard on Process Safety Management (PSM, 29 CFR

1910.119) as well as the EPA's regulation on Risk Management Planning (RMP, 40 CFR Part 68) on Chemical Accident Prevention Provisions. The two regulatory standards are closely aligned in scope, so the mandated compliance requirements are normally coordinated into a common compliance program. The host PC plant for the CEPACS plant is likely to have SCR NOx removal, and therefore also likely to employ either ammonia or another PSM/RMP chemical required for SCR injection and catalytic reaction. PC plant SCR NH_3 injection would be approximately 400 lb/h, or approximately 1,400 ton/yr of NH_3 consumption. Ammonia or ammonia-containing chemical or solution use at this scale would very likely trigger the provisions of the PSM and RMP. It is likely that the additional ammonia contained in the CEPACS absorption chiller units would represent a modification to an existing PSM/RMP program plan.

1.2.3.2 Lime, Gypsum

Limestone ($CaCO_3$) is estimated to be used in the CEPACS polishing FGD unit at a rate of 687 lb/h. The polishing FGD would consequently produce 1,181 lb/h of $CaSO_4$ (gypsum) adding to the PC plant solids dewatering plant load. These mass flow rates are incremental rates associated with the polishing FGD only and represent $\leq$2% increase in the overall mass flow rates for the respective streams for the host PC plant. The limestone and gypsum handling processes and equipment for the CEPACS plant polishing FGD are essentially identical to those used by the PC plant primary FGD. It is assumed that there exists adequate capacity in the limestone slurry and gypsum dewatering equipment to handle these increases in throughput.

Limestone is typically >98.5% calcium carbonate. $CaCO_3$ is a naturally occurring non-toxic earthen material that is nearly innocuous. It is non-flammable and non-reactive. In its dry form, it can produce dust that under severe, long-term human exposure conditions can result in pneumoconiosis (lung disease). Limestone can also contain trace concentrations of other minerals, including silica (quartz.) Respirable crystalline silica is a suspected carcinogen. The limestone processes for both the PC plant and CEPACS system are wet slurry processes, so dust exposure concerns are manageable. Control equipment will be used to limit dust generation and exposures to the incoming limestone unloading operations.

Calcium sulfate, also known as gypsum, is a non-flammable, non-reactive, non-volatile solid and non-toxic compound. In commercial forms (wall board), it may contain small quantities of crystalline silica. But as produced from the dewatering of FGD blowdown, it will only contain as much silica as was introduced through the limestone feed. Gypsum can generate dust, but as mentioned earlier, the FGD processes are wet processes and dust generation should not be a problem.

1.2.3.3 Carbon Dioxide

High Purity Carbon Dioxide will be generated as part of the CEPACS process. CO_2 can be a potential inhalation toxicant and a simple asphyxiate. OSHA has set a permissible exposure limit (PEL) for CO2 of 5,000 parts per million (ppm) over an 8-hour work day or 0.5% by volume of air.

The American Conference of Governmental Industrial Hygienists (ACGIH) TLV (threshold limit value) is 5,000 ppm for an 8-hour workday, with a ceiling exposure limit of 30,000 ppm for a 10-minute period based on acute inhalation data (MDPH 2005; NIOSH 1976).

A value of 40,000 ppm is considered immediately dangerous to life and health based on the fact that a 30-minute exposure to 50,000 ppm produces intoxication, and concentrations greater than that (7-10%) produce unconsciousness (NIOSH 1996; Tox. Review 2005).

2.0 Task 3.0 – Pilot-Scale ECM-Based CEPACS Systems Design

This section presents the detailed design for a pilot 3 MWe (flue gas equivalent) ECM-based CEPACS system designed to capture ≥90% of CO2 from a PC plant flue gas slipstream and produce high-purity (≥95%) CO_2.

2.1 Process Engineering

2.1.1 Design Basis

Site Selection

FCE conducted a search for a suitable site for the Carbon Capture pilot plant at the inception of the project. The National Carbon Capture Center (NCCC), operated by Southern Company, was initially considered for the project. However, the flue gas flow rate needed for the pilot plant was larger than the maximum flue gas flow rate available, and the pilot plant footprint was larger than the test bays available at the site. Consequently, the NCCC site was ruled out as a host for the project.

A subsequent effort to identify a suitable host site ensued using the following key criteria for selection:

- Availability of the required amount of flue gas from a coal-fueled power plant
- Availability of Natural Gas on site
- Availability of space required to accommodate the ECM carbon capture plant
- Costs to install the CEPACS system and associated utility connections

Preliminary mass and energy balances, process flow diagrams, flue gas clean-up subsystem equipment and pilot plant conceptual 3-D general arrangement drawings were prepared to support the site location search. A preliminary site Scope of Work was prepared for submittal to the interested organizations.

Eleven candidate sites were identified and subsequently contacted. Of those contacted, further discussions were held with two sites:

1. James M. Barry Plant, coal and natural gas (2,657 MW), Bucks, AL
2. Abbott Power plant, coal and natural gas cogeneration plant (80MWe + Steam), Champaign, IL

We approached two organizations to prepare first-pass estimates of cost related to the site work and preparation for the pilot scale project.

- Illinois Sustainable Technology Center (ISTC) for Abbott Power plant facility
- Southern Company for James M. Barry electric generating station run by Alabama Power

Southern Company's Plant Barry offered the lowest cost for the site preparation and support as compared to the Abbott plant. Additionally, the Plant Barry site has the following features:

- Plot space availability
- Existing flue connection supporting past carbon capture projects
- Supportive management and staff
- High power factor anticipated in future operations

Based on an evaluation of the costs and advantages associated with each both site, Plant Barry Site was selected as the host site for the ECM demonstration project.

Design Basis

The Design Basis for the pilot plant includes 10 distinct aspects of engineering design for consideration during the design phase. These aspects include:

1. Baseline Conditions
2. Project Scope
3. Site Requirements
4. Detailed Engineering Package Deliverables
5. Design Philosophy
6. Design Criteria
7. Process Stream Monitoring and Analysis
8. Schedule
9. Codes, Standards and Certifications
10. Safety

A summary of the design basis document sections follows.

1. Baseline Conditions

The composition and conditions of the flue gas and natural gas feed streams to the Pilot CEPACS system from the Barry Electric Generating Station are shown in Table 2-1 and Table 2-2, respectively. This information represents the values used to model and size process equipment and set the baseline operating condition for the Carbon Capture Pilot plant.

Table 2-1. Flue Gas Basis

Fuel Source	Columbian
Pressure, IWC	-0.5
Temperature, °F	131
Composition, v/v %	Wet
N_2	68.77
CO_2	Min 11.05
O_2	4.87
H_2O	15.33
SO_x	12 ppm dry
(SO_2)	9 ppm dry
(SO_3)	1 ppm dry
NO_x	45 ppm dry
(NO_2)	2.3 ppm dry
Particulate Matter	1.61 lb/hr
Mist from FGD	0.04 gr/scfd

Table 2-2. Natural Gas Basis

Component	Volume %
Methane	93.1
Ethane	3.2
Propane	0.7
n-Butane	0.4
Carbon Dioxide	1.0
Nitrogen	1.6
	100.0
Total Sulfur	3.0 ppm_v

CO_2 Product and Other Specifications: Table 1-3 lists the CO_2 capture requirement and product specifications for the pilot system.

Table 2-3. CO_2 Capture Requirement and Product Specification

Requirement	Specification
CO_2 Removal from Flue Gas	Greater than 90%
CO_2 Purity	Greater than 95 vol%
CO_2 Delivery Pressure	260 psia (1.8 MPa abs)

No cooling water is available from Plant Barry for this pilot project. Therefore, cooling systems are required in the Inside Battery Limits (ISBL) pilot plant design. Dry cooling is the preferred method to limit water consumption. However, hybrid cooling may be utilized to lower the maximum cooling water temperature if required by the process design.

2. Project Scope

The Barry Generating Station host site for the MW-Class Pilot CEPACS system is required to provide physical accommodations, utilities and electrical power for the CEPACS system. The requirement details are listed in the Design Basis together with a companion list of requirements for FCE to provide design details such as permits, drawings, construction oversight and management. Also discussed are project execution expectations, and Fuel Cell Energy's ECM module and BoP system pilot performance requirements.

3. Site Requirements

The Design Basis outlines the requirements for the Pilot plant footprint, Area Classifications, access and security, communications, signage, lighting and utility support for ancillary facilities.

4. Detailed Engineering Package Deliverables

The Design Basis lists requirements for the content of design packages for seven engineering disciplines including Civil/Structural, Mechanical, Electrical, Process, Piping, Instrumentation and Control and Safety Systems. Common to the requirements is a summary of the discipline design scope. All other requirements are unique to the disciplines.

5. Design Philosophy

The Design Basis presents eight topics of the Pilot plant design to guide and outline the approaches that will be taken initially for key design considerations. These topics include the discussion and application of a Pilot plant Control Philosophy, control of the CO_2 capture process, operation and maintenance for the Pilot plant and design considerations for the Balance of Plant including various modes of operation. Also discussed is the application of the standard product Fuel Cell modules to the process, management of the captured CO_2 for the Pilot plant, the configuration of the Fuel Cell modules and management of water throughout the process.

6. Design Criteria

The Design Basis presents the general Design Criteria for the Pilot plant including fundamental criteria for the host site conditions. In addition, the Design Basis discusses the Pilot plant configuration and siting characteristics and identifies the fluid inputs and outputs at the system boundary.

Importantly, standards are set for pipe sizing, fluid flow and nozzle loading for vessels. Design considerations are also set for the Cooling Water System, Heat Exchangers in general, the application of insulation to piping and equipment and maintenance intervals for the Pilot plant.

Standards for fire, smoke and gas detection shall be set in accordance with the Host Site requirements and applicable life safety codes.

7. Process Stream Monitoring and Analysis

The Design Basis identifies key gas streams within the Pilot plant to apply various discrete and continuous sampling and analytical methods to monitor the compositions within the process. The methods include local GC/MS analysis, discrete sample collection for off-site analysis and real-time in-situ continuous analysis for select constituents.

In addition to composition, temperature and pressure concerns are discussed for water and liquid CO_2 streams from the process.

8. Schedule

The project schedule shown in the Design Basis illustrates the relative timing of major project tasks. The actual project schedule is managed in accordance with the Project Management Plan.

9. Codes, Standards and Certifications

Codes and Standards for design compliance are cited from a variety of recognized national and international electrical, piping, and pressure vessel standards, including CSA FC-1 for fuel cell applications.

10. Safety

For the Design Basis, the focus for safety centers around the Hazard Operations Study more commonly referred to as the Hazard and Operability (HAZOP) analysis. The procedure and methodology for executing the HAZOP analysis are presented, as are specific practices and considerations for physical hazard isolation.

2.1.2 Process Description

Process Overview

FCE has developed the CEPACS (also known as SureSource Capture) system (US Patent 7,396,603 B2) as a novel solution for greenhouse gas emission reduction. The system employs ECM technology derived from the Company's well-established carbonate SureSource products (previously known as Direct FuelCell®). Figure 2-1 shows a simplified diagram of the system concept.

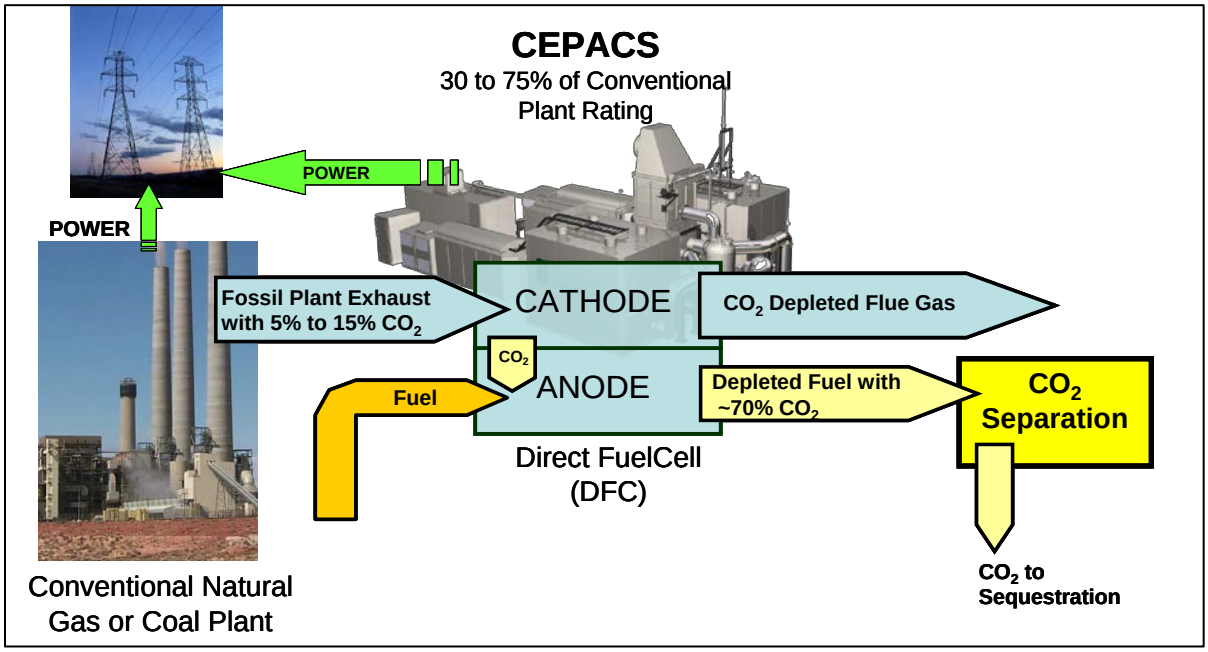

Figure 2-1. CEPACS System Process Schematic

CO_2-containing flue gas from a coal-fired or gas-fired (combustion-based) power plant, such as the exhaust from a PC power plant or other industrial source, is utilized as the oxidant for the ECM cathode. The ECM utilizes the CO_2 in the flue gas as a reactant for the electrochemical reaction to produce power, while synergistically transferring CO_2 from the flue gas to the anode exhaust stream. Supplementary natural gas fuel is internally reformed in the fuel cell to provide the hydrogen needed to complete the electrochemical power generation cycle.

The CO_2-rich anode exhaust gas is processed in the Balance of Plant to concentrate and compress the CO_2 for sequestration. The entire process generates excess water that is removed by condensation in downstream processing. Unused fuel (mainly H_2) in the CO_2-rich anode exhaust is separated during the CO_2 purification process via liquefaction of the CO_2. After removal of water and H_2, the resulting high purity CO_2 stream is ready for compression (pumping of supercritical fluid) and sequestration.

The CO_2-lean cathode exhaust (flue gas after CO_2 removal) is vented to atmosphere after recovering the heat for process use (e.g. preheating of feed streams, steam generation). Water condensed during post-processing of the CO_2-rich anode exhaust stream is used to provide water (steam) needed for internal reforming of CH_4 in supplementary fuel, eliminating the need for external process water. H_2 separated during post-processing of the CO_2-rich anode exhaust stream is recycled as part of the supplementary fuel to provide additional preheat in the system and thereby reducing the amount of NG fuel needed.

2.1.3 Heat and Material Balances (H&MBs)

A process model for the CEPACS system has been developed using CHEMCAD process modeling software. The process model includes a set of unit operations which simulate the Molten Carbonate Fuel Cell (MCFC) cell stack along with unit operations for the fuel cell balance of plant and carbon capture system equipment.

Visual Basic for Applications (VBA) code has been developed to semi-automate the simulation of the MCFC based carbon capture system using CHEMCAD. The code allows for convergence of important carbon capture system variables such as carbon capture percentage, fuel cell module heat balance, and fuel, carbon dioxide and oxygen utilizations. The stack performance is simulated using FCE's proprietary MCFC electrochemistry model which has been incorporated into the VBA code.

A user interface form (Figure 2-2) was developed to allow full control over the simulation including entering parameters and executing CHEMCAD. The VBA interface also includes a report generation function which outputs a system performance summary, unit operations report, and stream tables.

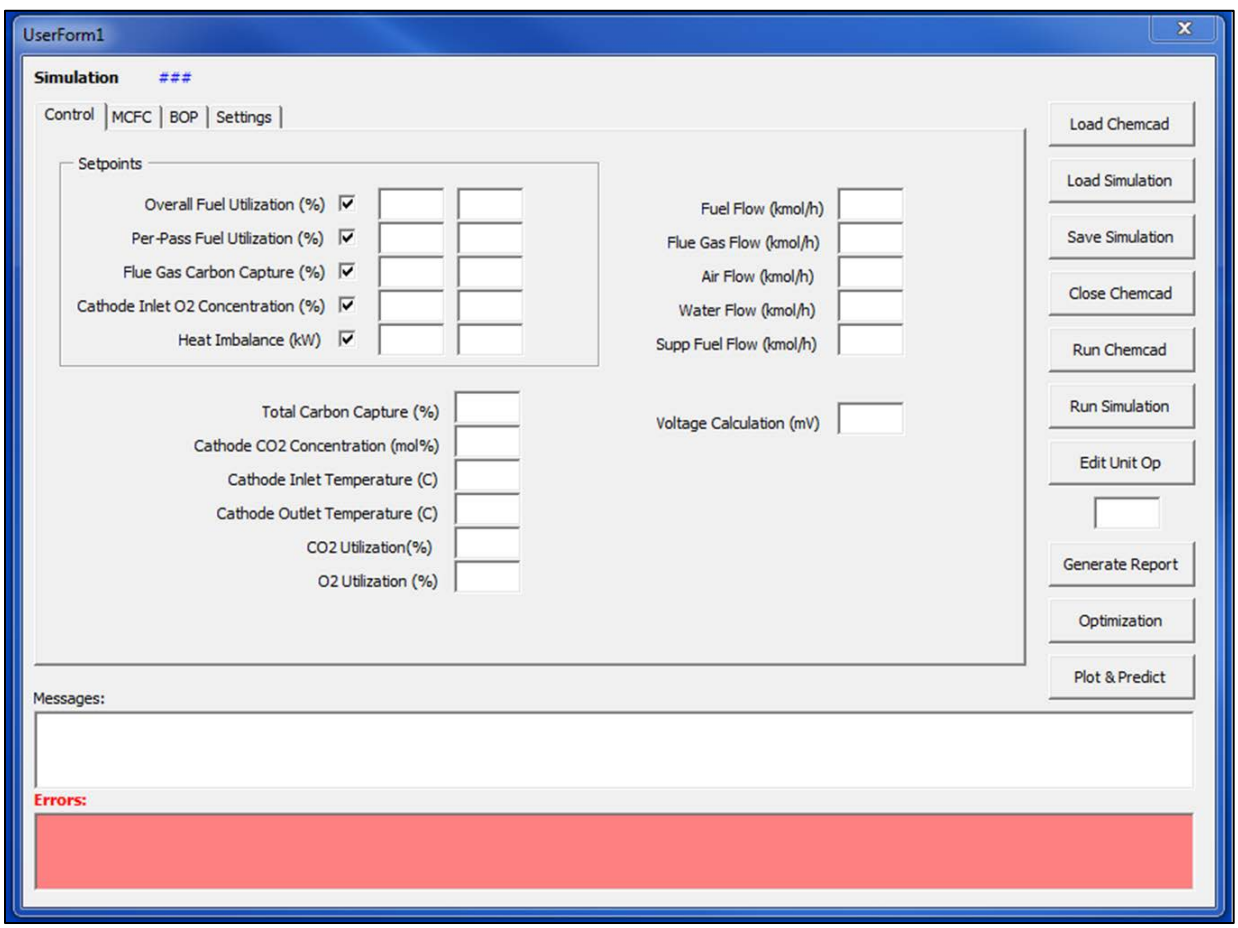

Figure 2-2. Screenshot of VBA User Form for Controlling Carbon Capture Simulations using CHEMCAD

The model has been successfully used for system configuration development, equipment sizing, and for system performance optimization.

Modes of Operation

The CEPACS system has three main modes of operation which are Standalone (power generation only), 70% carbon capture and 90% carbon capture from flue gas. In addition, the system includes heat-up and hot standby modes. Heat up mode consists of several steps which brings the fuel cell up to temperature and includes water and fuel enable. In hot standby mode, the system is at temperature and ready to produce power. Table 2-4 summarizes the primary modes of operation for the CEPACS system.

Table 2-4. Summary of CEPACS Modes of Operation

Mode #	Mode Description	Category
1	Standalone Power Generation	Operational Mode
2	70% Carbon Capture	
3	90% Carbon Capture	
4	Heat-up	Transitional Mode
5	Standby	

The CEPACS system is capable of operating in standalone mode, where power is being produced but carbon capture is not active. In this mode, all equipment downstream of the anode exhaust blower is isolated and powered down. In this mode, the anode exhaust gas downstream of the DCCT is split between the Saturator tower and catalytic oxidizer, rather than being sent to the Anode Gas Compression Skid.

The CEPACS system can be operated in either 70% or 90% carbon capture modes. In 70% carbon capture mode, the system can be run at higher current density and therefore process more flue gas and capture more CO_2 than in 90% carbon capture mode. For cases where the CO_2 concentration in the flue gas is relatively high (~11 mole %), the 70% CC mode can be run at higher current densities than in the cases of lower CO_2 flue gas (~8 mole %). For lower CO_2 cases, the current density is roughly 8% lower than high CO_2 operation.

Table 2-5 provides an overview of the system performance in the three main operating modes. Standalone mode gives the greatest power output. This is because the ECM modules can be operated at their maximum current density, (due to high CO_2 and O_2 concentrations in the cathode stream), and because the CO_2 purification train is powered down and not consuming a portion of the gross power generation. In addition, standalone mode gives the highest electrical efficiency since the amount of parasitic load compared to the carbon capture modes is relatively small.

The 70% carbon capture case generates 38% more power than the 90% carbon capture mode. This results in more total CO_2 captured than the 90% capture mode. However, due to the larger flue gas and anode gas flowrates when operating in 70% capture mode, the parasitic BoP losses are greater, resulting in slightly lower efficiency.

Table 2-5. SureSource Capture System Performance Summary

SureSource Capture System Performance Summary

Operating Mode	90% Capture Coal-Derived FG		70% Capture Coal-Derived FG		Stand-Alone (No FG Available)	
MCFC Gross Power, DC	**1863.4**	**kW**	**2542.9**	**kW**	**3112.3**	**kW**
Energy & Water Input						
Natural Gas Fuel Flow	169.4	scfm	243.2	scfm	329.9	scfm
Fuel Energy (LHV)	2877.8	kW	4087.0	kW	5723.1	kW
Water Consumed/(Produced)	(1.8)	gpm	(2.4)	gpm	(0.3)	gpm
Consumed Power						
AC Power Consumption	(611.0)	kW	(911.6)	kW	(206.0)	kW
Inverter Loss	(74.5)	kW	(101.7)	kW	(124.5)	kW
Total Parasitic Power Consumption	**(685.6)**	**kW**	**(1013.3)**	**kW**	**(330.5)**	**kW**
Net Generation & Efficiency						
CEPACS Plant Net AC Output	**1177.8**	**kW**	**1529.6**	**kW**	**2781.8**	**kW**
Electrical Efficiency (LHV)	**40.9**	**%**	**37.4**	**%**	**48.6**	**%**
Carbon Capture						
Total Carbon Capture, %	**92**	**%**	**75**	**%**	**N/A**	
Carbon Capture from FG, %	**90**	**%**	**70**	**%**	**N/A**	
Total CO_2 Captured, Tons per Day	**67**	**T/D**	**93**	**T/D**	**0**	**T/D**
CO_2 Purity	**99.6**	**%**	**99.6**	**%**	**N/A**	

Table 2-6 shows a list of the process simulations for the CEPACS system. The set of simulations includes 70% and 90% carbon capture modes for both normal and low CO_2 flue gas cases, standalone operation, fuel enable and hot standby. The simulations were performed for ISO (59°F), cold day (-20°F), and hot day (104°F) conditions.

Table 2-6. List of CEPACS Simulation Cases

List of CEPACS Simulation Cases										
	ID	Case		FG Type	%CC	BOL/EOL		Amb Cond.	Air Inlet Temp	[°C]
Case Information	CC001	CFB, 90% Cap, ISO, BOL	Control Specifications	PC	90	BOL	Ambient Condition Changes	ISO	59 F	*15.00*
	CC002	CFB, 70% Cap, ISO, BOL		PC	70	BOL		ISO	59 F	*15.00*
	CC003	CFB, 90% Cap, 104F, BOL		PC	90	BOL		104F	104 F	40
	CC004	CFB, 70% Cap, 104F, BOL		PC	70	BOL		104F	104 F	*40.00*
	CC005	CFB, 90% Cap, -20F, BOL		PC	90	BOL		-20F	-20 F	-28.89
	CC006	CFB, 70% Cap, -20, BOL		PC	70	BOL		-20F	-20 F	*-28.89*
	CC007	SA, 0% Cap, ISO, BOL		None	-	BOL		ISO	59 F	15
	CC007	SA, 0% Cap, ISO, BOL		None	-	BOL		ISO	59 F	*15.00*
	CC008	SA, 0% Cap, -20F, BOL		None	-	BOL		-20F	-20 F	-28.89
	CC009	SA, 0% Cap, 104F, BOL		None	-	BOL		104F	104 F	*40.00*
Case Information	CC010	8%CO2,90% Cap, ISO, BOL	Control Specifications	Low CO2	90	BOL	Ambient Condition Changes	ISO	59 F	15
	CC011	8%CO2, 70% Cap, ISO, BOL		Low CO2	70	BOL		ISO	59 F	*15.00*
	CC011a	8%CO2, 70% Cap, ISO, BOL		Low CO2	70	BOL		ISO	59 F	15
	CC012	8%CO2, 70% Cap, 104F, BOL		Low CO2	70	BOL		104F	104 F	*40.00*
	CC013	8%CO2, 90% Cap, -20F, BOL		Low CO2	90	BOL		-20F	-20 F	-28.89
	CC014	8%CO2, 70% Cap, -20F, BOL		Low CO2	70	BOL		-20F	-20 F	*-28.89*
	CC015	0%LR, 0% Cao, ISO, BOL		PC	-	BOL		ISO	59 F	15
	CC016	25%LR, 0% Cap, ISO, BOL		PC	-	BOL		ISO	59 F	*15.00*
	CC017	50%LR, 0% Cap, ISO, BOL		PC	-	BOL		ISO	59 F	15
	CC018	75%LR, 0% Cap, ISO, BOL		PC	-	BOL		ISO	59 F	*15.00*
	CC019	LR, 0% Cap, ISO, BOL		None	-	BOL		ISO	59 F	15
Case Information		HSBy, ISO, BOL	Control Specifications	None	-	BOL	Ambient Condition Changes	ISO	59 F	*15.00*
	CC021	FE, ISO, BOL		None	-	BOL		ISO	59 F	15
	CC021a	FE, -20F, BOL		None	-	BOL		-20F	-20 F	-28.89
	CC022	CFB, 90% Cap, ISO, EOL		PC	90	EOL		ISO	59 F	*15.00*
	CC023	CFB, 70%CCap, ISO, EOL		PC	70	EOL		ISO	59 F	15
	CC024	CFB, 90%CCap, 104F, EOL		PC	90	EOL		104F	104 F	*40.00*
	CC025	CFB, 70%CCap, 104F, EOL		PC	70	EOL		104F	104 F	40
	CC026	CFB, 90%CCap, -20F, EOL		PC	90	EOL		-20F	-20 F	*-28.89*
	CC027	CFB, 70% Cap, -20F, EOL		PC	70	EOL		-20F	-20 F	-28.89
	CC028	SA, 0% Cap, ISO, EOL		None	-	EOL		ISO	59 F	*15.00*
	CC029	SA, 0% Cap, -20F, EOL		None	-	EOL		-20F	-20 F	-28.89
Case Information	CC030	SA, 0% Cap, 104F, EOL	Control Specifications	None	-	EOL	Ambient Condition Changes	104F	104 F	*40.00*
	CC031	8%CO2, 90% Cap,ISO, EOL		Low CO2	90	EOL		ISO	59 F	15
	CC032	8%CO2, 70% Cap, ISO, EOL		Low CO2	70	EOL		ISO	59 F	*15.00*
	CC033	8%CO2, 70% Cap, 104F, EOL		Low CO2	70	EOL		104F	104 F	40
	CC034	8%CO2, 90% Cap, -20F, EOL		Low CO2	90	EOL		-20F	-20 F	*-28.89*
	CC035	8%CO2, 70% Cap, -20F, EOL		Low CO2	70	EOL		-20F	-20 F	-28.89
	CC036	AGO/Burner Design Case		None	-	BOL		ISO	59 F	*15.00*
Case Inf	CC037	No flue gas carbon capture	Control S	None	70	BOL	Ambient	ISO	59 F	15
	CC038	25% CFB, ISO, BOL		PC	70	BOL		ISO	59 F	*15.00*
	CC039	50% CFB, ISO, BOL		PC	70	BOL		ISO	59 F	15
	CC040	75% CFB, ISO, BOL		PC	70	BOL		ISO	59 F	*15.00*

Water Balance

The SureSource Capture process is designed to be a net water generator of process water for the fuel cells during carbon capture mode and is optimized in design to use a minimum amount of water overall. Two of the processes consuming water during carbon capture modes include the Caustic Scrubber and Mist Eliminator. The Caustic Scrubber requires makeup water (0.2 gpm) and additional water to wash the demister pad for 1.5 minutes on an hourly basis. The equivalent continuous water flow is 0.35 gpm. The Mist Eliminator requires a periodic wash for its elements, which averages to an equivalent continuous flow of 0.22 gpm. The discharges from these two processes are directed to the permitted treatment and discharge system.

The Cooling Water System is the third principal consumer of water, with the consumption dependent on ambient conditions and plant operating mode. The Hybrid Cooling Tower is a closed circuit fluid cooler where water is sprayed on the cooling tubes to provide evaporative cooling for the glycol water solution used throughout the CEPACS system. When the Hybrid Cooling Tower is using water, the makeup water flow demand is estimated to be 13.3 gpm based on a cooling load of 380 tons and operation for 4 cycles of concentration with a blowdown rate of 3 gpm. The Hybrid Cooling Tower only consumes water when the ambient temperature is above 80°F to produce cooling water for the process at a maximum of 90°F. When the ambient temperature is below 80°F, the tower is operated as a dry cooler with no cooling water. Since the source of cooling water is demineralized water, it is possible that the cycles of concentration can be increased significantly, thereby reducing the blowdown by 50% or more. Non-chemical water treatment, based on the principle of pulsed power, is planned to reduce the blowdown from the Hybrid Cooler when operated in wet mode. The exact blowdown value will be validated during pilot plant commissioning to ensure adequate water quality in the Hybrid Cooler.

The Pilot Plant consists of a water storage subsystem and two subsystems that generate water when the plant is in the carbon capture mode: the Anode Gas Cooling and Anode Gas Compression subsystems. The Anode Gas Cooling subsystem humidifies the natural gas feed to allow the steam reforming reaction to take place. The subsystem also recovers water from the anode exhaust gas for reuse within the system. In the 70% Carbon Capture case, 1.96 gpm of water is recovered from the anode exhaust gas. The Anode Gas Compression subsystem recovers water as condensate from inter-stage cooling and separation. Condensate from the subsequent stages (~ 0.53 gpm) may contain trace oil and must be pretreated before being directed to the permitted water treatment and discharge system.

The Anode Water Seal will have active level control that will fill or drain the vessel to maintain the required level. Normal continuous operation does not require continuous flow into or out of the vessel. However, condensate could accumulate in the vessel necessitating discharge to maintain proper level.

Figure 2-3 shows the water balance for the 70% Carbon Capture (104˚F Ambient) case.

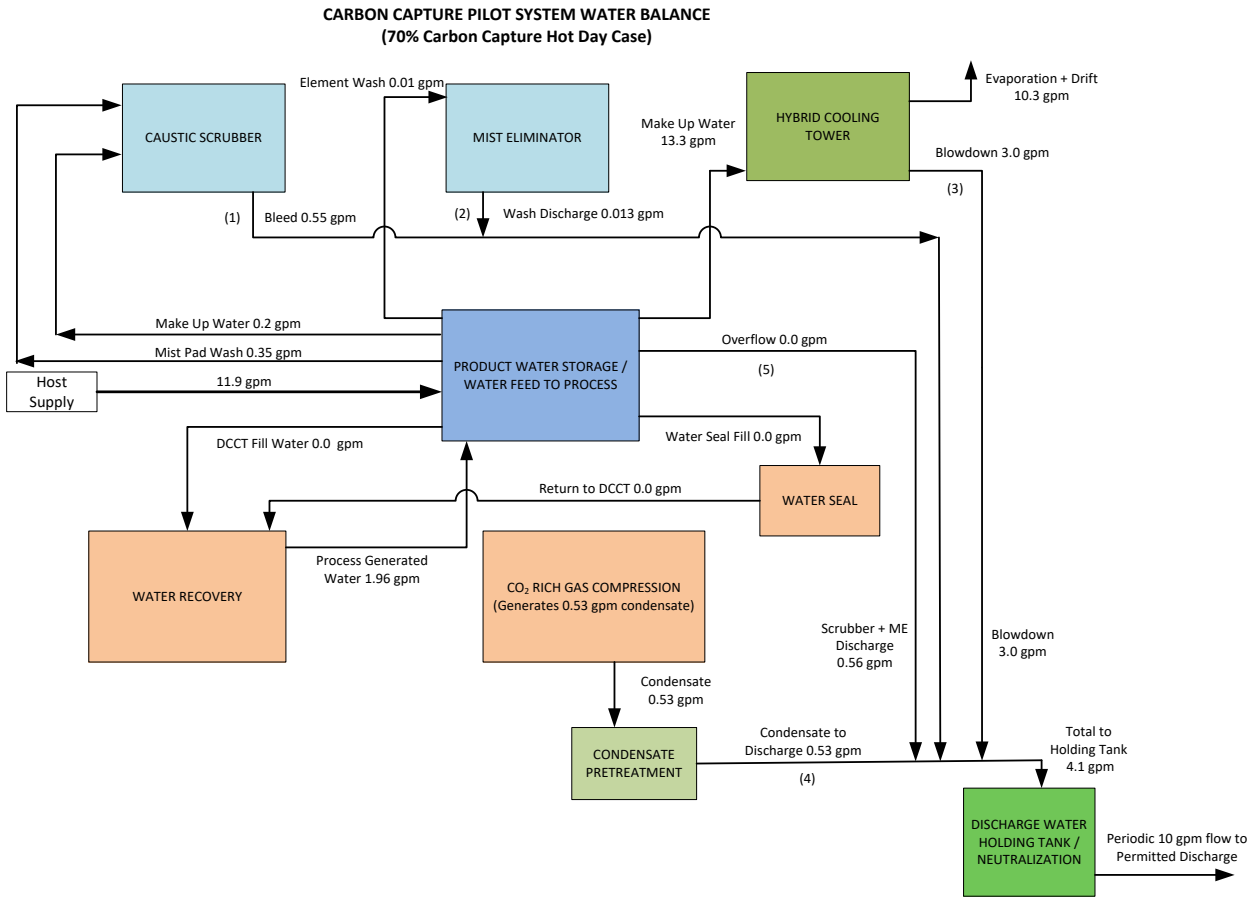

Figure 2-3. 70% Carbon Capture (104˚F Ambient) Water Balance

2.1.4 Piping and Instrumentation Diagrams (P&IDs)

Revision 3 of the P&ID's has been issued for the Pilot Plant design. The P&IDs are comprised of 32 sheets for the various unit operations of the system as well as logic references. Primary and secondary level process control logic is noted throughout the sheets.

The current revision of the P&IDs was updated based on the results and recommendations of the system HAZOP analysis. Table 2-7 lists the complete set of P&ID sheets.

Table 2-7. Pilot Carbon Capture System P&ID Summary

Sheet No.	Title
1	Abbreviations, Component Identification
2	Equipment & Piping Symbols
3	Valve & Instrumentation Symbols
4	Water Treatment System
5	Fuel Gas Desulfurization
6	Fuel Gas Humidification
7	Fuel Gas Superheat
8	Fuel Gas Preconverter
9	Caustic Scrubber & FG Blower
10	Baghouse & Mist Eliminator
11	Fresh Air Blower
12	Fresh Air Preheat
13	Burner / Catalytic Oxidizer
14	DFC Module Piping & Control
15	Anode Water Seal
16	Anode Cooling & Shift Reactor
17	DCCT Water Management
18	Anode Gas Compression
19	Regenerative Gas Dryer
20	Absorption Chiller
21	CO2 Purification (For Pilot Application)
22	Closed Loop Cooling System
23	Liquid Nitrogen Microbulk
24	Analytical Equipment
25	Pilot Plant Exhaust Stack
26	System Control Logic
27	CO_2 Purification with Pumps (For Product Application)
28	Oil/Water Separator
29	Instrument Air Distribution
30	Discharge Water holding Tank
31	Mechanical Chiller Cooling System
32	Back Up Generator Power Distribution

2.1.5 Piping Design

The piping design has been completed in accordance with the Piping and Instrumentation Diagrams (P&IDs) for the SureSource Capture Pilot Plant. The design data includes pipe diameter, fluid service, and material selection as defined in FCE piping specifications. The appropriate pipe size and class was selected, consistent with the highest flow/velocity demand for various modes of operation as defined in the H&MBs.

Excerpts from the piping line list are included in Appendix A. The full list includes 185 pipe sections. Principal elements of the line list include:

- Fluid service code, as defined in Sheet 2 of the P&IDs
- Line sequence number
- Pipe class as defined in the FCE piping specification SP-FCE-50-3
- Pipe size (diameter)
- Insulation and/or heat trace needs
- Pipe Flo Pro line number, from the piping network model, described below

The piping insulation and heat tracing design, including material, thickness, jacketing and installation practices, is in accordance with FCE's insulation specification (SP-FCE-80-1).

In support of the piping design, a network model was developed for the process gas piping, including air, power plant flue gas, natural gas, and carbon dioxide (CO_2) product. The fluid properties in the network are taken from the Heat & Material Balances for the three modes of operation – coal fired boiler, low CO_2 CFB operation, and standalone mode. The properties are then adjusted for density according to the pressures predicted throughout the network.

The physical layout, including linear piping distances and types of fittings, is entered into the network model from the actual 3-D CAD layout of the equipment and piping. The modeled network is depicted below in Figure 2-4, Figure 2-5, and Figure 2-6 for a design case of 70% carbon capture and 95% fuel utilization from a low CO_2 boiler under 104˚F ambient conditions.

The software used to analyze the network is PIPE-FLO Professional. The results displayed in Figure 2-4, Figure 2-5, and Figure 2-6 include:

- Pipe section ID
- Pipe size
- Mass flow rate
- Fluid velocity
- Section pressure drop (dP)
- The mass flow appearing in the CHEMCAD Heat & Material Balances.

The pipe section IDs are numbered to match the CHEMCAD stream numbers. This is the "Pipe Flo Pro" line number which appears in the line list. The line list is used to correlate and cross reference the Heat & Material Balances with the P&IDs.

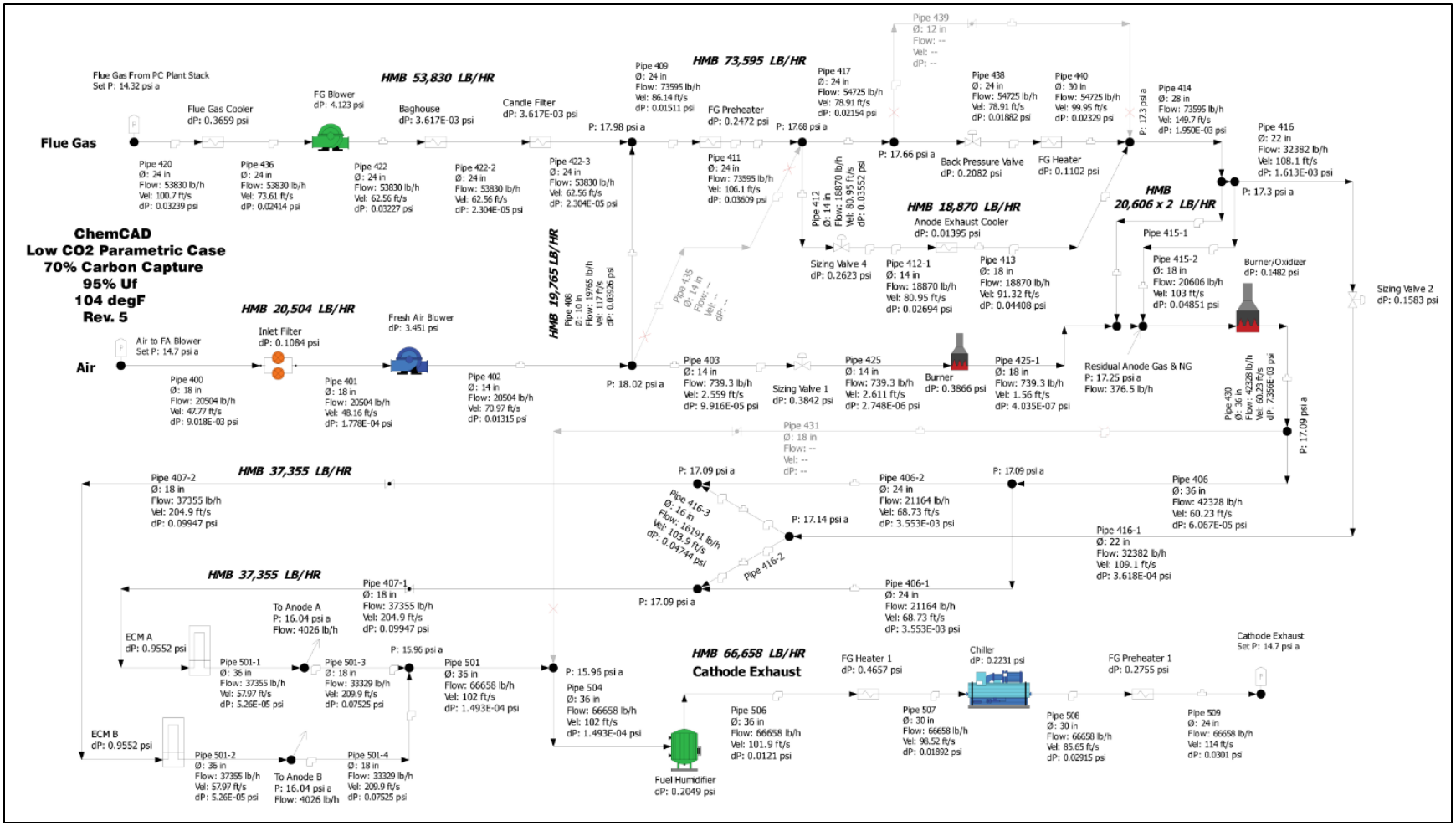

Figure 2-4. Pipe-Flow Model of 70% Carbon Capture Operation at 104°F ambient conditions (Air/Flue Gas System)

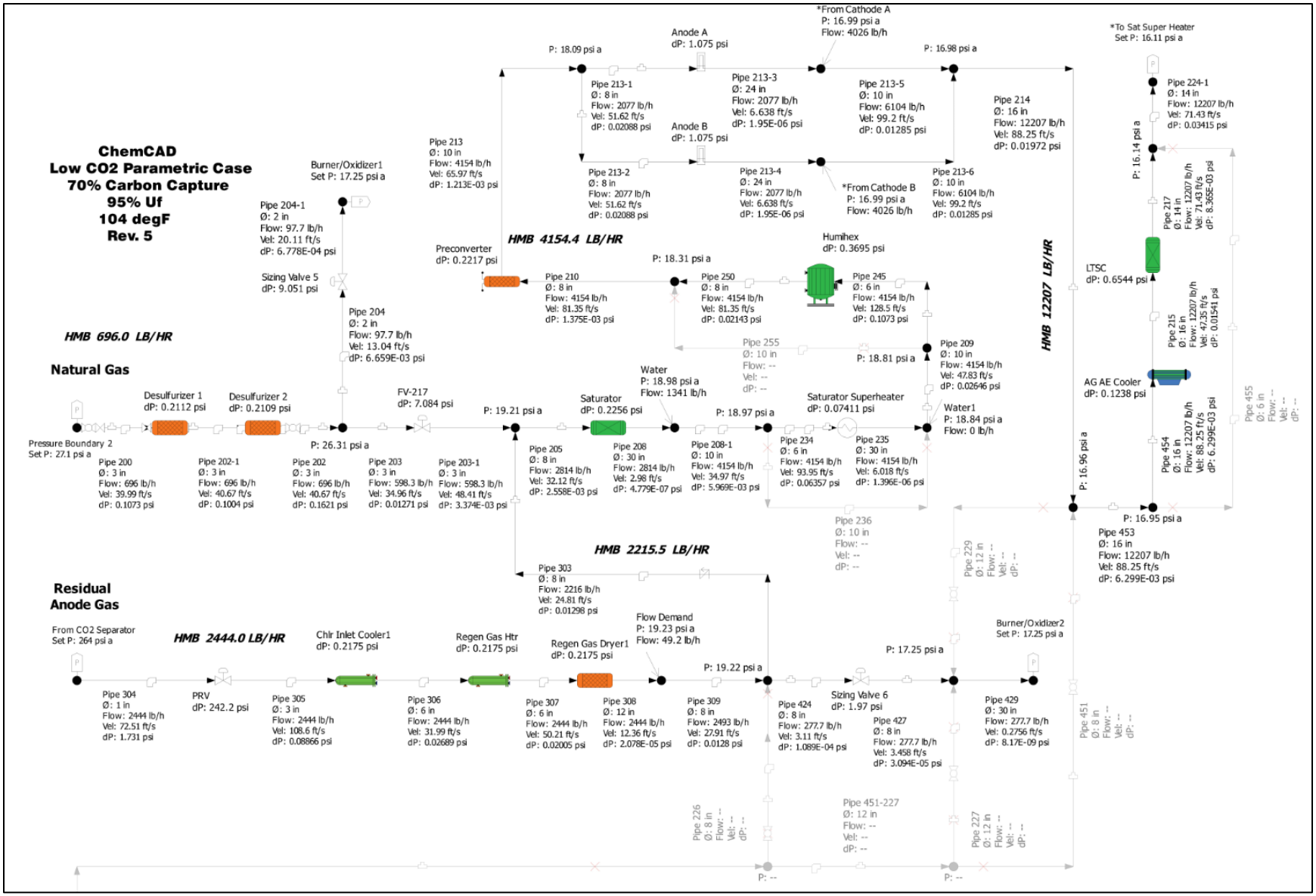

Figure 2-5. Pipe-Flow Model of 70% Carbon Capture Operation at 104°F ambient conditions (Fuel & Anode Gas System)

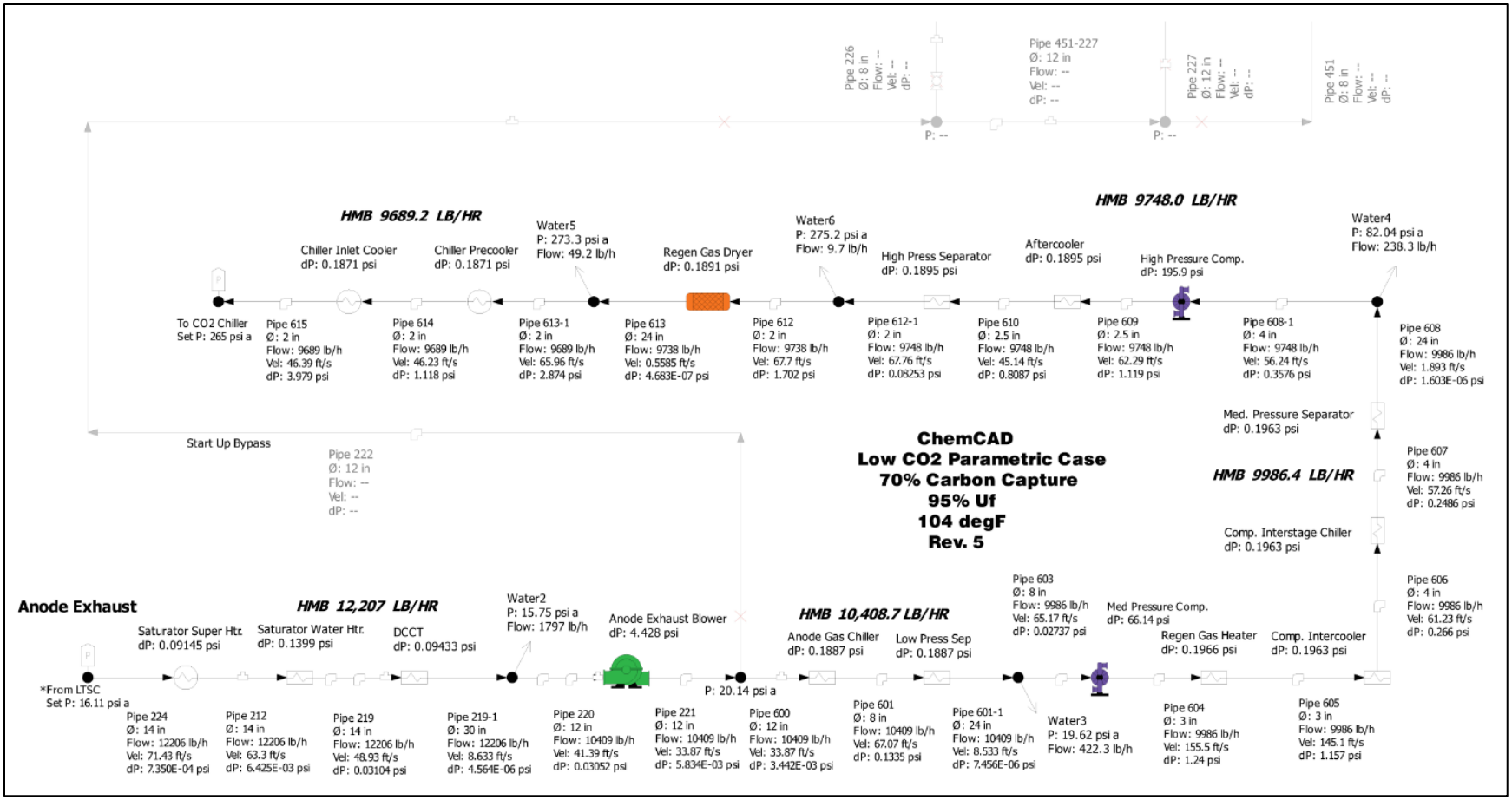

Figure 2-6. Pipe-Flow Model of 70% Carbon Capture Operation at 104°F ambient conditions (CO_2 & Anode System)

As a further aid to pipe size selection, an economically optimum flowing velocity was estimated versus varying volumetric flow for each design mode. For the design case of the low CO_2 CFB operation, results are depicted in Figure 2-7 for gas phase (compressible fluid) piping. It can be observed that for higher volumetric flow rates, it is economically desirable to use a higher flow velocity, rather than target a constant velocity across all sizes.

The economic comparisons were done using capital cost for the piping at $4.787/lb. of steel combined with operating costs (from section pressure drops) of $0.10/kWh of consumed power. A 5-year payback on power savings was used to create a capital/operating cost equivalency and then determine the point of minimum cost.

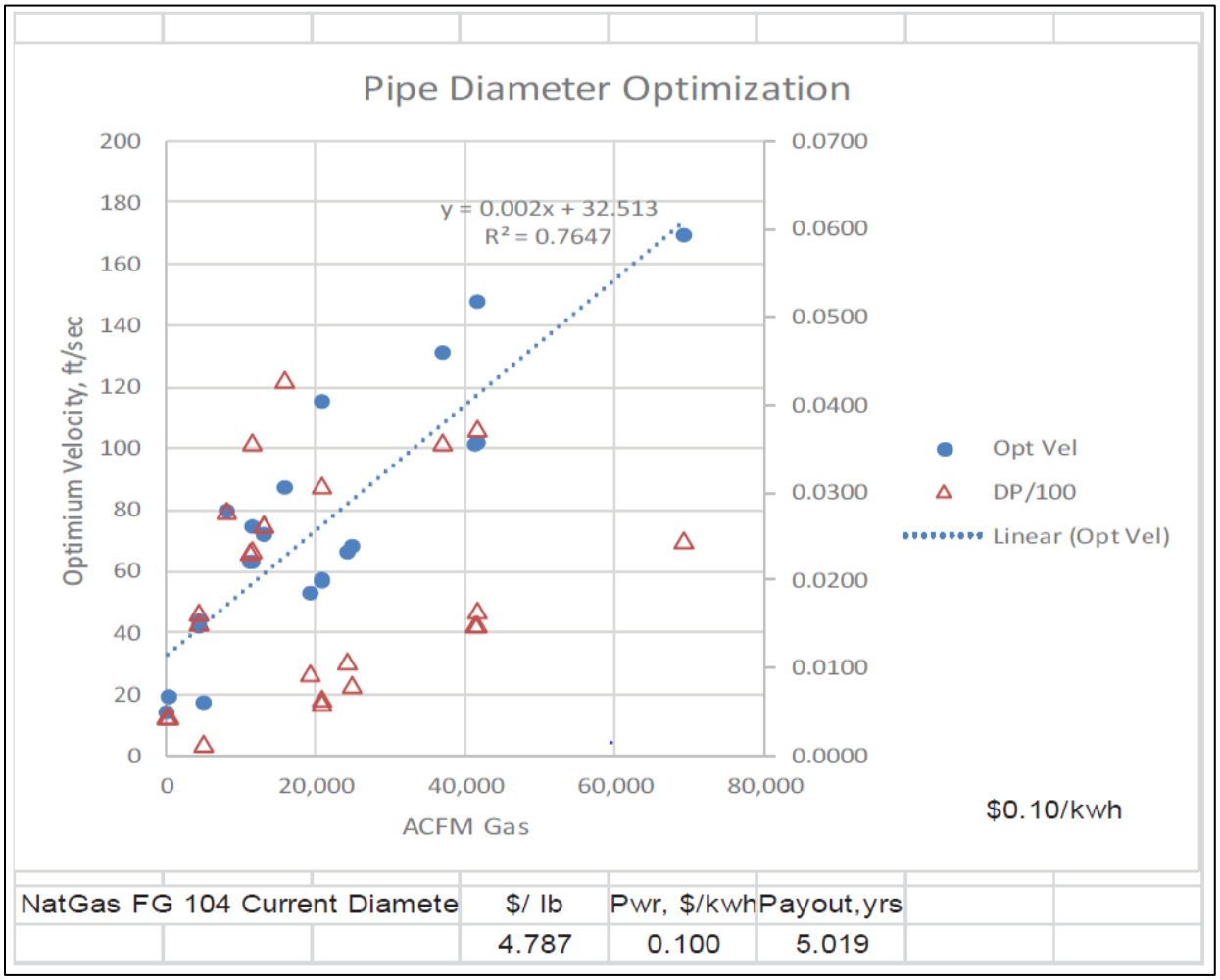

Figure 2-7. Pipe Diameter Optimization Results

2.1.6 Instrument Specifications and Selection

Subsequent to issuing Piping and Instrumentation Diagrams (P&IDs) for the SureSource Capture Pilot Plant, a master Instrument List was assembled. The Instrument List, derived from the P&IDs, is used to manage the specification and procurement of all instruments, such as control valves, safety relief valves, transmitters, analyzers and switches. Important design information, as appropriate to each item, is entered there for quick and convenient reference. This includes:

- P&ID Sheet Number
- Instrument Tag Name
- Service Description
- Instrument Type
- Size
- Operating Range
- Manufacturer and Model Number

As items are purchased in later project stages, the list is also used to track the status of procurement.

The Instrument List is also combined and integrated with the Programmable Logic Controller (PLC) I/O List. For the field I/O devices that communicate with the PLC, the signal type, engineering unit span, PLC wiring termination address (Rack/Slot/Channel) and Internet Protocol (IP) address are all tabulated, where applicable.

Summarized in Table 2-8, the master Instrument List contains 696 items, of which 520 require PLC I/O. The PLC incorporates 109 analog inputs (not including thermocouples and RTD's), 46 analog outputs, 149 temperature elements (thermocouples), 93 digital inputs and 123 digital outputs.

An excerpt from the master Instrument List is included in Appendix B.

Table 2-8. Instrument List Summary

INSTRUMENT LIST SUMMARY				
Field devices		**176**		
	HV's		95	95
	AE's		30	30
	PCV, PSV, PRV		7	7
	Other		44	44
PLC I/O		**520**		
	AI		109	
		Flow		15
		Pressure		31
		Diff. Pressure		18
		Level		8
		Voltage		8
		Other		29
	AO		46	
		Flow		2
		Temperature		18
		Pressure		3
		Level		2
		Speed		7
		Other		14
	Temperature Elements		149	
		Module		50
		Balance of Plant		99
	DI		93	
		Valve Position		14
		Status & Alarms		79
	DO		123	
		Valves		38
		Heat Trace		47
		Start/Stop		38
TOTALS		**696**	696	696

<u>Flue Gas Analysis Instrumentation</u>

Due to the presence of sulfur as SO_2/SO_3 and myriad other trace-contaminants in coal flue gas, particular attention during the design process was devoted to characterizing and estimating the constituents of concern and selecting both in-situ and discrete methods for analysis of the contaminants during operation of the pilot plant. Burning coal generates various types of particulate matter (PM), which constitutes a complex mixture of solid and liquid particles of organic and inorganic substances suspended in air. There are 84 elements reported in coal [Juda-Rezler et al., 2013]. The range of trace elements found in various types of coal is extensive and varies with geographical location of the coal source.

Previously, effects of coal-derived trace species in fuel gas in a reducing condition on a MCFC were reported [Pigeaud et al.,1987]. With this background, a new report was issued and ten contaminants were selected: ammonia, sulfur (in all forms), halides, arsenic, zinc, selenium, cadmium, lead, tin, and mercury [Energy Research Corporation, 1992]. Fuel Cell Handbook, seventh edition issued by DOE, supports this selection by reporting the same elements as potentially harmful contaminants to a MCFC [EG&G Technical Services, Inc., 2004]. However, these reports focused on trace contaminants from coal which were supplied to the anode side in a reducing condition. These identified species are expected to have a somewhat different impact on the cathode side in an oxidizing condition, where flue gas is supplied to the MCFC cathodes. In short, a detailed study for identifying harmful contaminants for the cathode inlet in the MCFC was required.

In 2014, under cooperative agreement DE-FE0007634 with the DOE, Pacific Northwest National Laboratory (PNNL) performed experimental and modeling studies for FuelCell Energy to assess potential reactions of flue gas impurities with MCFC components at the cathode side [Marina, 2014]. They considered five specific contaminates: S, Cl, F, Hg, and Se. In flue gas at the cathode in the temperature range of 500-750°C, these species are found to be in gaseous form as SO_3/SO_2, HCl, HF, HgO, and SeO_2, respectively. In the modeling study, SO_3/SO_2, HCl, and SeO_2 were identified as potentially harmful contaminants, which reacted with either cathode materials (NiO) or electrolyte materials (Li_2CO_3, K_2CO_3). HF and HgO were reported as having negligible impact to the MCFC. The thermochemical calculations presented by PNNL were performed using FactSage 6.4 and associated databases. NH_3, As, Zn, Pb, Cd, and Sn were not studied by PNNL from the aforementioned ten contaminants.

In addition, PNNL conducted button cell tests. The results are summarized in Table 2-9.

Table 2-9. Summary of results from PNNL button-cell tests [Marina, 2014].

Flue Gas Contaminant	Highest Concentration Tested by PNNL, with low/no power degradation		Notes
SO_2	1	ppm_v	Performance losses due to short-term SO_2 exposure up to 40ppm were fully reversible
Se	10	ppb_v	No apparent degradation over 860 hours.
Hg	250	ppb_v	Expected form is predominantly elemental Hg. No apparent degradation over 1100 hours.
HCl	200	ppb_v	No apparent degradation over 900 hours.

Ammonia is also entrained as NO_x in flue gas. Kawase et al. reported that a MCFC removes NO_x from the flue gas by purification: NO_x reacts with electrolyte (i.e. carbonate) and dissolves into NO_2^-/NO_3^-. These ions then react with H_2 at the anode side yielding N_2 and small amounts of NH_3, which are released from the anode [Kawase, 2001]. Their bench scale tests with 20 ppm of NO_x showed that cell performance was almost the same as that without NO_x. In short, NO_x is not harmful to a MCFC.

A new study was conducted to assess an effect of additional flue gas impurities: As, Zn, Pb, Cd, and Sn, on the cathode side for the carbon capture program [Leung, 2016]. In oxidizing conditions in the temperature range of 527°C to 827°C (i.e. 800°K to 1100°K), these impurities are found as: AsO_x(solid/gas), ZnO (solid), PbO (solid/gas), CdO (solid) / $Cd(OH)_2$ (gas), and SnO (solid). Among these impurities, only AsO_x was identified to be harmful to the MCFC. These results are

based on thermodynamics calculations using Fact-Web. In addition, arsenic is located next to selenium in the periodic table, which was reported to have similar chemical characteristics to sulfur [Marina, 2004]. This adds to the argument that arsenic is potentially detrimental to a MCFC.

Due to the similarity to HCl (i.e. halogen acid gas), which showed loss of the carbonate electrolyte through alkali chloride volatilization [Marina, 2004], two halide acid gases (i.e. HBr and HI) were studied comparing melting points of those alkali metal halides: They are 547°C (LiBr) and 469°C (LiI), 755°C (NaBr) and 651°C (NaI). The maximum operating temperature of the MCFC is approximately 650°C. Having a lower melting point than 650°C directly correlates its volatilization. Thus, these alkali metal halides may result in weight loss from the electrolyte in the MCFC. This implies that HBr and HI may be harmful to a MCFC.

In addition, fluoride compounds have much higher melting points: LiF (870°C), and NaF (992°C), respectively compared to the operating temperature of the MCFC. HF is therefore not harmful to a MCFC. PNNL's conclusion supports this result [Marina, 2014]. Furthermore, melting points of alkaline chlorides: NaCl (800.4°C) and LiCl (614°C) support the hypothesis that they are harmful to a MCFC due to low melting points (i.e. ease of volatilization). All melting points are taken from the chemical engineering's handbook [R.H, Perry et al, 1973], except LI [ESPI Corp. MSDS].

In conclusion, we have completed a detailed review of the constituents in flue gas in an oxidizing condition that could negatively impact a MCFC and its carbon capture system. This review identified three contaminants and three halogens: {S, Se, and As} and {Cl, Br, and I}, entrained as SO_x (gas), SeO_2 (gas), and AsO_x (solid), and HCl/HBr/HI (gas) in flue gas.

Specification for SO_x, SeO_2, AsO_x and HCl/HBr/HI: In flue gas, sulfur is present as a mixture of SO_2 and SO_3. It is well known that they are detrimental to a MCFC. For instance, displacement of alkali carbonate by SO_3 is strongly favored. The minimum concentration of SO_3 required for forming alkali carbonates is on the order of 10^{-8} to 10^{-7} ppm [Marina, 2014]. These concentrations are far lower than that likely present in flue gas even after cleaning up. Moreover, SO_2 and SO_3 may be captured by electrochemical reactions in a fuel cell operation [Marina, 2014]. Based on the current understanding of the effect of sulfur on MCFC's performance, it is projected that long-term operation (i.e. 40,000 hours) will not suffer significant degradation, if the fuel gas contains no more than 10 ppb of sulfur [EG&G Technical Services, Inc., 2004]. It is fair to consider that 10 ppb is the detection limit for SO_x in the flue gas. In addition, commercially available sulfur analyzers have a detection limit of 10 ppb, which was another reason for using this detection limit for CEPACS FGD system design. SeO_2 and AsO_x have similar chemistry to sulfur oxide [Marina, 2014], therefore their detection limits are also set to 10 ppb. The detection limit for HCl was set to be 40 ppb. This achieves a maximum of 10% of electrolyte weight loss after 15 years of HCl exposure using thermodynamic calculations [Marina, 2014]. Due to high volatility of their alkaline compounds, the detection limits were set as 20 ppb and 10 ppb for HBr and HI, respectively. These detection limits are shown in Table 2-10.

Specification for Particulate Matter (PM): Based on results from computer modeling and actual particle precipitation data inside a bench-scale MCFC, the tolerance limit for inert dust particle concentration in fuel gas was estimated to be <10 mg/L (i.e. <10 g/m^3) for PM >1 µm, and that for PM <1 µm is <0.1 mg/L (i.e. <100 mg/m^3) [Pigeaud et al, 1987]. DOE reported the tolerant limit for large particles as <0.1 g/L, which is a much larger amount compared to the aforementioned study [EG&G Technical Services, Inc., 2004]. PM is estimated to be <5 to < 25 µg/m^3 after intensive cleaning (i.e. after a mist eliminator). Due to this low PM amount in our process, there is no available continuous analyzers for PM. Thus, a discrete analysis will be performed.

Specification for Trace Metals (TM): We selected two potentially harmful metal oxides to monitor during pilot testing: SeO_2, and AsO_x [Leung, 2016]. Trace metals are found in particulate matter. A discrete analysis will be performed.

Instrument Selection: Several continuous/discrete analytical technologies were identified to detect and monitor these contaminants at multiple points in the pilot plant flue gas treatment system. Locations have been selected to monitor the contaminant concentrations at three points within the FGD process: 1) at the Caustic Scrubber inlet (Flue Gas from the PC Plant), 2) after the Caustic Scrubber outlet, and after the mist eliminator. It is important to acknowledge that these sampling points have much lower temperatures at 55°C and 78°C [AECOM, 2016], respectively, compared to a MCFC's standard operating temperature of ~650°C. This lower temperature changes the forms of the contaminants. At these low temperature points, selected harmful constituents are found to be as follows: Sulfur: H_2SO_4 (SO_3)/SO_2 (gases). Selenium: SeO_2 (gas/solid). Arsenic: AsO_x (solid). All halogen gases: HCl/HBr/HI (gases).

Description of Selected Flue Gas Analyzer: Continuous gas analyzers have been reviewed for six manufacturers of dedicated continuous sampling and analytical equipment. In addition, three discrete analytical methods have been reviewed. The results of the review are summarized in Table 2-10.

FCE has selected a continuous analyzer for SO_x and HCl due to their high toxicity impact of high levels to a MCFC. Since concentrations of HBr and HI are two order of magnitudes smaller than that of HCl in flue gas [AECOM, 2016], they are monitored by a discrete analysis.

Vendor A met the required specification with a laser infrared spectrometer, which measures SO_2 and HCl gas. Vendor B offers an UV fluorescence analyzer with a low detection limit (LDL) of approximately 10 ppb for SO_2, which meets our requirement. However, the analyzer required a water chiller, where some dissolved SO_x species will be lost. Vendor C cannot meet our specification for SO_2.

FCE contacted vendor D and E for the SO_3 analyzer. Vendor D has a unique approach of detecting SO_3/H_2SO_4 using wet chemistry: H_2SO_4 (SO_3) is adsorbed by isopropanol as sulfate ions, which run through a reactor filled with barium chloranilate crystals. That results in $BaSO_4$ and acid chloranilate (AC). The AC concentration is measured by an analyzer. However, the LDL for this analyzer was 600 ppb, which was too high for our application. Vendor E had another approach: detecting process parameters associated with condensable vapor using an acid dew point. Formation and evaporation temperatures are used to identify the species of condensable materials. Unfortunately, their LDL was also too high. To conclude, there is no commercially available continuous SO_3 analyzer which meets FCE specification to the best of our knowledge.

While there is no continuous SO_3/H_2SO_4 monitoring system, a discrete analysis method was considered for detection. Vendor F offered a solvent trap, which can be used for gas species and measures SO_2, SeO_2, HCl, HBr, and HI. Due to low concentration of these species after the mist eliminator, a long time exposure of the solvent trap to the flue gas was necessary.

Method 29 and Method 5, both discrete analytical techniques, were considered for PM and TM (i.e. SeO_2, and AsO_x), respectively. Vender G provides these techniques and meets our specifications. Vendor H offered TM analysis. However, they use SEM-EDX for qualitative metal analysis, which does not meet our specifications.

Vendor I offered an analyzer which measures SO_2, SO_3/H_2SO_4, HCl, CO_2, NO, O_2, and H_2O. Its detection limits for SO_2, SO_3/H_2SO_4, and HCl were insufficient for the expected contaminant levels at the Mist Eliminator outlet. However, this was the best continues SO_3/H_2SO_4 analyzer in the market to the best of our knowledge with the LDL of 120 ppb and 200 ppb for SO_3 and H_2SO_4, respectively. Due to the toxicity of SO_3/H_2SO_4 to a MCFC, inlet gas will be monitored by this analyzer, where SO_3/H_2SO_4 concentration is at the ppm level [AECOM, 2016]. This analyzer will work well for the inlet and outlet (for SO_3/H_2SO_4) of the Caustic Scrubber. Concentrations of CO_2, NO, O_2, and H_2O are of high importance for plant process control. Thus, they are also planned

to be monitored by this analyzer and are at sufficient levels in all locations for adequate analyzer performance.

In summary, the analyzer offered by vendor A is selected for continuous monitoring of SO_2 and HCl at the Mist Eliminator outlet. Vendor F offers a solvent trap, a discrete analysis method for detecting gas species of SO_3/H_2SO_4, SeO_2, HCl, HBr, and HI. Vendor G covers solids detection using Method 29 for PM and Method 5 for TM (i.e. SeO_2 and AsO_x). Additionally, vendor I offers a continuous analyzer for CO_2, NO, O_2, and H_2O for the process control purpose as well as monitoring high ppm concentrations of SO_3/H_2SO_4 at the Caustic Scrubber inlet and Caustic Scrubber outlet (for SO_3/H_2SO_4).

Table 2-10. Analyzer Comparison

Vendor	Continuous /discrete	Analyzer	Low detection limit (LDL) after mist eliminator	Specification LDL	Comment
A	Continuous	SO_2/HCl Analyzer Multi Component Laser Infrared Spectrometer	SO_2 (LDL: <10 ppb) HCl (LDL: <1 ppb)	SO_2 (LDL: <10 ppb) HCl (LDL: <40 ppb)	Meets FCE specification.
B	Continuous	SO_2 Analyzer UV Fluorescence	SO_2 (LDL: ~10 ppb)	SO_2 (LDL: <10 ppb)	This analyzer requires chiller. Some SO_x will be dissolved into water: Less accurate.
C	Continuous	SO_2 Analyzer Pulsed Fluorescence technology	SO_2 (LDL: ~50 ppb)	SO_2 (LDL: <10 ppb)	LDL is insufficient.
D	Continuous	SO_3 Analyzer Wet chemistry	$H_2SO_4(SO_3)$ (LDL: 600 ppb)	SO_3 (LDL: <10 ppb)	LDL is insufficient.
E	Continuous	SO_3/H_2SO_4 analyzer Acid dew point	$H_2SO_4(SO_3)$ (LDL: ~ppm level)	SO_3 (LDL: <10 ppb)	LDL is insufficient.
F	Discrete	Solvent Trap	This is a discrete analysis. Due to low concentration, long time sample collection is required.	SO_3 (LDL: <10 ppb) SeO_2 (LDL: <10 ppb) HBr (LDL: <20 ppb) HI (LDL: <10 ppb)	Meets FCE specification.
G	Discrete	Particulate Matters: Method29 Trace Metals: Method5	This is a discrete analysis. Due to low concentration, long time sample collection is required.	AsO_x, SeO_2	Meets FCE specification.

H	Discrete	Trace Metals: SEM-EDX	This is a discrete analysis. Due to low concentration, long time sample collection is required.	AsO_x, SeO_2	Qualitative analysis, does not meet FCE requirements.
I	Continuous	SO_2, SO_3/H_2SO_4, HCl, CO_2, NO, O_2, and H_2O Infrared photometer, bi-frequency and gas filter correlation	SO_2 (LDL: 20 ppb) SO_3 (LDL: 120 ppb) H_2SO_4 (LDL: 200 ppb) HCl (LDL: 100 ppb)	SO_2 (LDL: <10 ppb) SO_3 (LDL: < 10 ppb) HCl (LDL: <40 ppb)	SO_x & HCl: LDL is insufficient. CO_2, NO, O_2, and H_2O: meets FCE requirement.

Cathode Oxygen Measurement: At the cathode side of the MCFC, flue gas supplies O_2 and CO_2 to have the following electrochemical reaction:

$$\frac{1}{2}O_2 + CO_2 + 2e^- \rightarrow CO_3^{2-}$$

In carbon capture mode, flue gas with depleted O_2 concentration is used for the reaction. In this case, additional O_2 needs to be brought in via a fresh air blower to establish the required O_2 level. Thus, O_2 monitoring is planned to ensure sufficient O_2 is available at the cathode inlet for the carbon capture operation and optimal cell performance.

A zirconium oxide O_2 sensor for an automotive application is widely available in the market and was obtained and calibrated for our process conditions, mimicking our cathode inlet. We were able to correlate O_2 (%) vs. conditioned O_2 signals (mA), as shown in Figure 2-8. We plan to use multiple low-cost automotive O_2 sensors in the pilot plant to monitor O_2 concentrations in the process and augment the fresh air blower control.

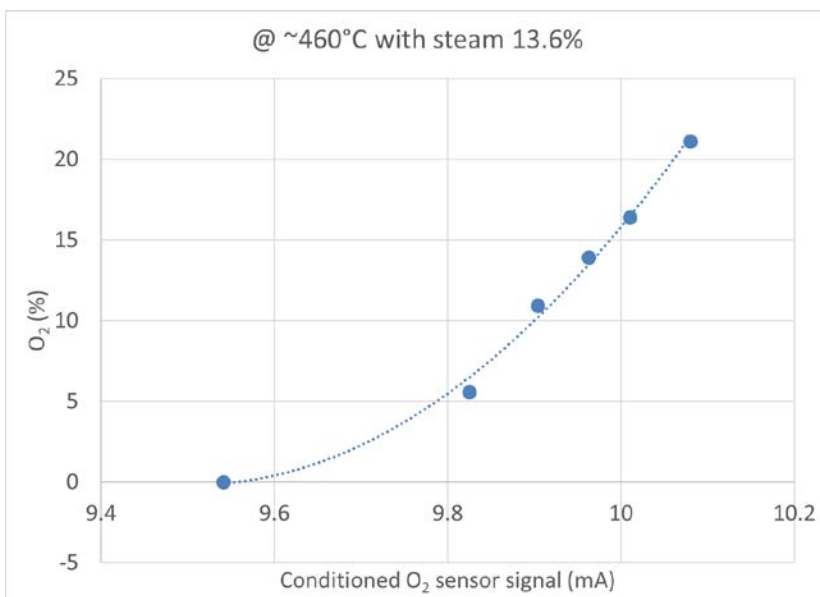

Figure 2-8. Oxygen Sensor Measurements

2.1.7 Hazard and Operability Analysis (HAZOP)

Approach

In order to ensure intrinsic plant safety, a complete hazard and operability (HAZOP) study was performed on the ECM Pilot plant in accordance with FCE's Standard Work Instructions. Following the completion of Revision 1 of the plant P&IDs, the HAZOP study utilized a systematic approach to define 96 discrete process nodes. Nodes were defined by establishing boundaries within process piping/control-volumes where mass flow was fixed, or more specifically, mass flow in equaled mass flow out. Further delineation occurred where major composition changes occurred such as through the fuel cell stacks, catalytic oxidizer, etc. Finally, nodes were also categorized into "FCE Nodes" which were entirely with the purview of FCE design and manufacturing; and "Vendor Nodes" which required collaboration/input from packaged equipment vendors.

Following node definition, annotated P&IDs detailing the nodes and their respective boundaries were prepared and distributed to the process, mechanical, electrical, and instrumentation/control engineering teams. A series of 25 HAZOP meetings were held to investigate each node in sequence. The formal HAZOP meeting sessions included attendance by at least one, and usually multiple, representatives from each engineering discipline. The HAZOP team included members of the pilot plant design team, as well as engineers from FCE's commercial product engineering group to provide an independent viewpoint. Node investigation utilizes a standardized and systematic process where "deviations" from nominal process operation caused by "causes" are postulated. The resulting consequences are then discussed and effectiveness of existing safeguards appraised. Finally, these consequences are assigned a severity and likelihood classification.

Deviations are defined as any process variable departure from normal operation which can be described by a guide word. An example of such a deviation would be "high temperature" where the guideword, "high," describes the direction/value of the process variable, "temperature." There are several permutations of guidewords; high, low, no, wrong, reverse, etc. and process variables; composition, phase, temperature, level, leak, pressure, etc. However, for a deviation to be deemed credible, it must be capable of being caused by a single point failure within the current interrogated node. An example such as "high flow" could be caused by a faulty flow control valve, or a poorly calibrated flow meter. Separate and distinct causes are detailed for each deviation as the consequences and safeguards may vary depending on the cause. Multiple simultaneous or near-simultaneous failure requirements for deviations are generally not considered under the "double jeopardy rule" – unless a failure could be undetected for an extended period of time, such as the failure of a seldom used valve, or if commercial experience otherwise justifies the credibility of a scenario.

After the detailing of all hypothesized deviations and their potential causes, the consequences of these deviations, which may not be limited to the node, are outlined. Each deviation–cause pair may have several distinct consequences which are individually identified and recorded. Next, specific safeguards that are currently in place to directly act on the deviation–cause pair are enumerated.

Finally, the team rates the deviation–cause–consequence severity and the likelihood of occurrence using the following scales:

Severity

1. Serious: death, multiple injuries requiring hospitalization, or damages >$1M

2. High: injury requiring hospitalization or damages (including fines) >$100K

3. Medium: on-site treatable injury, damage >$10K, reprimand from regulatory body

4. Low: no injury, minimal damage, probably no off-site impact

Likelihood

1. High: perhaps certain to occur at least once in during life of facility, P>0.9

2. Medium: probably will occur once, P>0.25

3. Low: not probable, P<0.25

4. Very Low: slim chance, P<<.05

Table 2-11 lists some typical safeguards used in the HAZOP process and the corresponding likelihood level when these safeguards are applied to a hypothesized deviation.

Table 2-11. List of Typical Safeguards and Associated Likelihood Levels

Safeguard Type	Likelihood Level
OTP and/or PIM	1
H or L alarm + response per OTP in time to prevent or mitigate consequence	1
HH or LL alarm with automatic local equipment shutdown	2
HH or LL alarm with automatic plant shut down	3
Fail-safe mechanical device, where simple physics control; e.g. PSV, rupture disk	4

The final risk rating was determined by adding the likelihood ratings and inputting them into the risk matrix, as shown in Table 2-12.

Table 2-12. Risk Matrix Used for HAZOP Analysis

		Severity			
		1	2	3	4
L	1	**A**	**A**	**B**	**C**
i	2	**B**	**B**	**C**	**D**
k	3	**C**	**C**	**D**	**D**
e	4	**D**	**D**	**D**	**D**

Risk ratings “A” and “B” are considered unacceptable risk levels and must result in some corrective action in the plant design and/or procedures. “A” level ratings generally require a substantial mitigation system inclusion whereas “B” ratings may sometimes be mitigated using increased operator training/procedures. “C” level ratings are considered “undesirable,” however, they may generally be addressed by procedural and maintenance changes rather than system design changes. “D” ratings are considered acceptable risks and no further action is warranted.

Results and Discussion

The ECM pilot plant system HAZOP was performed over multiple full week onsite meetings with several follow up sessions. The entire process engineering group and most of the mechanical engineering group participated which provided crucial insight between the intersection of process design and physical implementation. During the course of the HAZOP, defined nodes were modified in size, scope, inclusion and type as needed to avoid unnecessary duplication and avoid errant analysis of vendor dependent equipment.

All HAZOP data – deviations, causes, consequences, safeguards, rankings, and recommendations; was collected using the industry standard software package PHAWorks. A screenshot is shown in Figure 2-9. The first round of the HAZOP is complete, which included a total of 80 completed FCE specific nodes, 172 separate parameters, 307 deviations, and nearly 1,000 related causes and consequences. Following the HAZOP meeting, a complete deviation-

cause report was published with all issues categorized into their respective severity. The data was further refined and collated into an active spreadsheet for sorting, filtering, and itemization of action items. Actions items were condensed into a separate database of individual action items and assigned to the relevant engineering discipline for further analysis and application of mitigation techniques within the P&IDs or other design documentation, as required. A final HAZOP session will be held after procurement activities have been initiated and final drawings and documentation are received for vendor-supplied equipment packages.

CEPACS Hazop V5: Node 9, Parameter Flow

Session: (3) 10/23/2017
Node: (9) Line NGD-2020 bypassing 200-HX-201
Drawings: 5230-31-02 SH. 7, Fuel Gas Superheat
Parameter: Flow

Revision: (3) 6/14/2017
Intention: Enables bypass flow of NGD around 200-HX-201 to control preconverter inlet temperature.

GW	DEVIATION	CAUSES	CONSEQUENCES	SAFEGUARDS	S	L	R	RECOMMENDATIONS
No	*No Flow during power operation*	*1. TV-220B fails closed for any reason*	*1.1. High temperature in preconverter and eventual FCD*	*1.1.1. TAHH-220SD*	*1*	*3*	*C*	1.1.1. Match temperature tags between SS 4000 and SSC 3000 1.1.2. Add anode inlet high temperature alarm/fix tags - *TAHH-xy375 reduce kW/TAHHH-xy375 trip to HSBY - tags need to be corrected* 1.1.3. Add TAH 222 and TAH 223 1.1.4. Add mechanical stop to TV-220B to avoid full closure
	No Flow - Shutdown	2. TV-220B Valve failed closed during shutdown event	2.1. Bypass line not purged, Condensation forms in bypass line which then flows directly into pre-converter causing catalyst damage	2.1.1. Heat traced line - FG-2110, process temperature 2.1.2. Short line length - limits total possible condensation to small volume	2	2	B	2.1.1. Add Process heat (rather than just freeze protection) trace line to FG-2120, 2108, 2118 2.1.2. Add mechanical stop to TV-220B to avoid full closure
High	*High Flow when not needed, fuel enable*	*3. Automatic valve TV-220B fails open for any reason*	3.1. Preconverter below operating temperature limits hydrogen production - leading to *FCD damage due to RU/Anode oxidation*	3.1.1. *TDALL-220SD/TALL-223* 3.1.2. *TALL-222SD*	*1*	*4*	*D*	

Figure 2-9. PHA Works screen shot detailing work flow of HAZOP process

2.2 Pilot Plant Equipment

2.2.1 Introduction

All major equipment has been selected based on the process requirements for the Pilot Plant. Wherever possible, carryover equipment from FCE's SureSource 3000 and 4000 power plants was utilized as-is, or with modifications. For new CEPACS-specific equipment, designs which were readily available as commercial off-the-shelf (COTS) items from vendors were preferred. In cases where there were no suitable COTS designs available from vendors that fulfilled the process requirements, custom designs were developed either by FCE in-house, using resources and technical knowledge of similar equipment from previously-developed FCE systems, or in collaboration with equipment vendors.

The equipment specification and selection process for the pilot plant was completed by following the systematic approach outlined below:

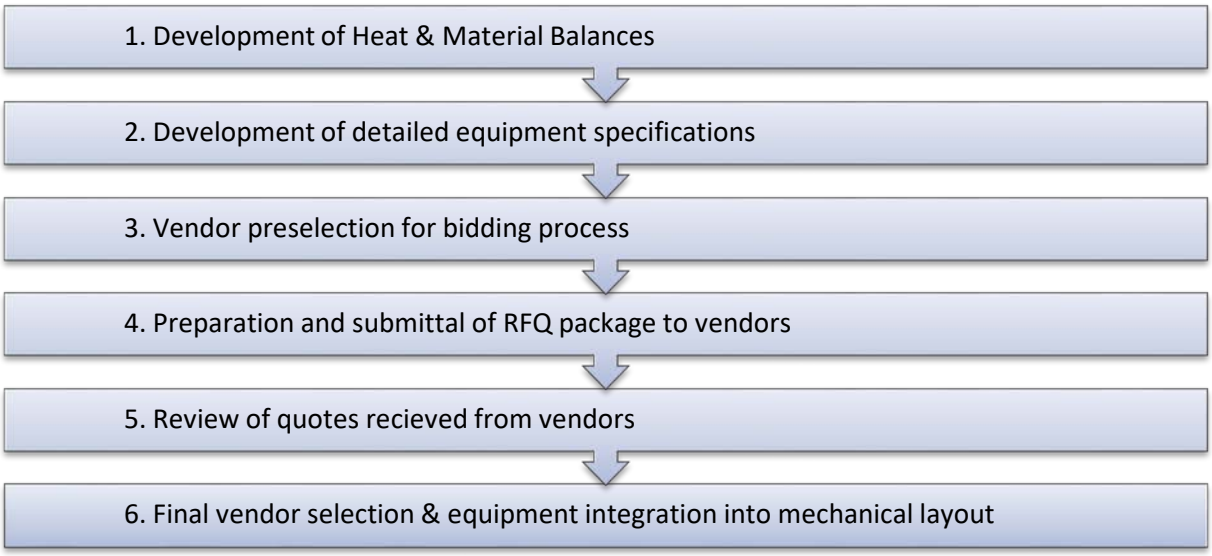

The equipment specified and selected for the Pilot Plant falls under the broad categories of heat exchangers, liquid/gas separation vessels, reaction vessels, rotating equipment, chillers and flue gas cleanup systems. Equipment in these categories is described in greater detail in the subsections that follow.

2.2.2 Equipment List

The key design features and characteristics for all equipment, such as electrical voltage/power requirements, footprint, equipment tag number, equipment capacity/size, equipment selection basis, and vendor selections have been tabulated in the equipment list. A list of equipment identifications, from the complete equipment list, is shown in Table 2-13.

Table 2-13. Pilot Plant Equipment Identification List

Equip. Tag No.	Equipment Name
500-HE-502	Absorption Chiller
400-CP-401	Air Compressor
300-BL-501	Anode Exhaust Blower
300-HX-501	Anode Exhaust Cooler
500-CP-501/2/3	Anode Gas Compressor
300-VE-203	Anode Water Seal
300-HE-203	Anode Water Seal Heater
300-PU-201	Anode Water Seal Pump
400-VE-504	Baghouse
400-HE-201	Burner
400-OX-201	Catalytic Oxidizer
400-PU-503	Caustic Feed Pump
400-VE-503	Caustic Scrubber
400-HE-503	Caustic Scrubber Electric Heater
400-PU-501/2	Caustic Scrubber Recirculation Pumps
400-TK-501/2	Caustic Solution Tank

Equip. Tag No.	Equipment Name
600-PU-103	Chilled Glycol Recirculation Pump
600-HX-513	Chiller Hybrid Cooler
500-HX-511	CO_2 Sub-Cooler
500-HX-512	CO_2 Chiller Pre-Cooler
500-SP-510	CO_2/H_2 Separator
200-RR-201A/B	Cold Gas Desulfurizers
300-HX-508	Compressor Pre-Cooler
300-SP-503	Compressor Pre-Separator
600-PU-101	Cooling Tower Recirculation Pump
100-HE-502A/B	DCCT Electric Heaters
100-PU-501	DCCT Pump
100-HX-507	DCCT Water Cooler
200-RR-203	Deoxidizer/Pre-Converter
100-SP-502	Direct Contact Cooling Tower
700-TK-501	Discharge Water Holding Tank
700-PU-501	Discharge Water Pump
500-HX-518	Dryer Pre-Cooler
300-HX-506	Electric Water Heater
400-ES-501	Exhaust Stack
500-AE-501	Flue Gas Analyzer 1
400-HX-503	Flue Gas Heater
400-ME-201	Flue Gas Mixing Plenum
400-HX-502	Flue Gas Preheater
400-BL-502	Flue Gas Primary Blower
400-BL-201	Fresh Air Blower
400-SL-201, 400-FL-201A-F, 400-FL-203A-F, 400-FL-202	Fresh Air Blower Inlet Silencer, Housing, and Filter
300-VE-201A/B	Fuel Cell Vessels – A/B
200-HX-201	Fuel Humidifier
500-AE-502	Gas Chromatography + Sampler
500-HX-517	Glycol Cooler HX
600-TK-501	Glycol Tank
500-SP-508	High Pressure Separator B
100-AC-201	HVAC Unit w/ Electric Heating
500-SP-503	Low Pressure Separator
300-RR-501	Low Temperature Shift Converter
600-PU-102	Main Glycol Recirculation Pump
500-HX-514	Mechanical Chiller
400-VE-505	Mist Eliminator
400-PU-501	Mist Eliminator Discharge Pump
400-HE-505	Mist Eliminator Electric Heater
200-GE-501	NG Powered Standby Generator

Equip. Tag No.	Equipment Name
500-SP-511	Oil / Water Separator
500-SP-512/3 500-FL-510	Oil/Water Separator Carbon Filters / Cartridge Filter
500-TK-502	Oil/Water Separator Oil Drum
500-PU-506	Oil/Water Separator Oil Pump
500-PU-507	Oil/Water Separator Water Pump
400-PU-504	Peroxide Pump
400-TK-503	Peroxide Solution Tank
200-HE-203	Pre-Converter Band Heaters
100-PU-101	Product Water Pump
100-TK-501	Product Water Tank
600-WT-501	Pulsed Power Treatment System
500-HX-510	Regen Gas Heater
500-SP-509A/B	Regenerative Gas Dryer
200-ST-501	Saturator
200-HE-501	Saturator Tower Electric Heater
300-HX-504	Saturator Super Heater
300-HX-505	Saturator Water Heater
200-PU-501	Saturator Water Pump
400-BL-501	Tank Ventilation Blower

2.2.3 Flue Gas Treatment System

Process Bid Specifications were developed by AECOM for the three subsystems of the flue gas treatment system. The specifications were prepared to ensure sufficient removal of SO_2 and SO_3 to prevent negative impacts to the ECM modules. FCE reviewed and approved the specifications for issuance to vendors. AECOM prepared and issued Requests for Quotation (RFQ) packages to multiple vendors. AECOM received bids for evaluation within the allotted quotation periods and prepared Bid Tab reviews for each vendor quotation. AECOM issued a Letter of Recommendation (LOR) after conducting a follow up round of clarifications to FCE for final vendor selection.

<u>Caustic Scrubber</u>

Bids for the caustic scrubber were solicited and received from four vendors according to the performance requirements shown in Table 2-14. The preferred bid was selected based on the lowest price offering that was technically and commercially compliant with the requirements. The specifications of the scrubber is shown in Table 2-15 and an illustration of the unit is shown in Figure 2-10.

Table 2-14. Caustic Scrubber Performance Requirements

	INLET	OUTLET
Flow (acfm)	10,441	10,441
Temperature (°F)	131	131
Pressure (psia)	14.3	14.2
SO_2 (ppm)	10	0.01

Table 2-15. Caustic Scrubber Specifications

PARAMETER	SPECIFICATION
MODEL	Custom
TYPE	Packed Tower
TOWER HEIGHT (FT)	42.0
DIAMETER (FT)	6.0
PACKED BED DEPTH (FT)	25.0
PUMP POWER	20 HP 480 V, 3 phase, 60 Hz
RECIRCULATION (GPM)	450
MAKE UP WATER (GPM)	0.2
BLEED (BLOW DOWN) (GPM)	0.2
CAUSTIC FEED (GPH)	0.1

Figure 2-10. Example Photograph of a Similar Caustic Scrubber Tower

Fabric Filter

Bids for the Fabric Filter were solicited and received from three vendors according to the performance requirements shown in Table 2-16. The preferred bid was selected based on the lowest price offering that was technically and commercially compliant with the requirements. The specifications of the fabric filter are shown in Table 2-17 and an illustration of the unit is shown in Figure 2-11.

Table 2-16. Fabric Filter Performance Requirements

	INLET	OUTLET
Flow (acfm)	11,984	11,984
Temperature (°F)	185	185
Pressure (psia)	3.6	3.4
Particulate Matter (lb/h)	4.1	0.004

Table 2-17. Fabric Filter Specifications

PARAMETER	SPECIFICATION
MODEL	Custom
TYPE	Pulsed Jet Cleaning
FABRIC FILTER HEIGHT (FT)	42
LENGTH (FT)	12
WIDTH (FT)	12
SHIPPING WEIGHT (TONS)	35
FILTER AREA (SQ. FT)	3,617
ROTARY SCREW MOTOR	3 HP, 460 V, 3 Phase, 60 Hz
FILTERS	192 - 6” diam x 12 ft
PULSED JET CLEANING	25 SCFM @ 90 PSIG

Figure 2-11. Illustration of a Fabric Filter

Mist Eliminator

A bid for the Mist Eliminator (Candle Filter) was solicited and obtained, according to the performance requirements shown in Table 2-18. The bid was accepted based on the offering being uniquely technically and commercially compliant with the requirements. The specifications of the fabric filter is shown in Table 2-19 and an illustration of the unit is shown in Figure 2-12.

Table 2-18. Mist Eliminator Performance Requirements

	INLET	OUTLET
Flow (acfm)	11,984	11,984
Temperature (°F)	185	185
Pressure (psia)	3.4	2.9
SO_3 / H_2SO_4 (ppm)	2	0.002

Table 2-19. Mist Eliminator Specifications

PARAMETER	SPECIFICATION
MODEL	Fiber Bed
TYPE	FRP Vessel with Derakane 470 Wound Filaments
MIST ELIMINATOR HEIGHT (FT)	16.5
DIAMETER (FT)	10.5
NUMBER OF ELEMENTS	10
WEIGHT (LB)	21,700
WASH WATER (GPH)	33.9
AIR FLOW (CFM)	20.3

Figure 2-12. Illustration of a Mist Eliminator

2.2.4 Natural Gas Desulfurization System

The SureSource Capture Pilot Plant receives a natural gas supply that is delivered from a standard utility connection, which contains ~3 ppm_v of total sulfur compounds. The natural gas

needs to be desulfurized due to the susceptibility of the catalyst in the ECM module to sulfur poisoning. This process occurs in the natural gas desulfurization system, which consists of two adsorption vessels allowing lead/lag operational flexibility.

Figure 2-13. 3-D Model of Desulfurizer Vessel (Equipment Tag # 200-RR-201A/B)

Each vessels contain multiple layers of proprietary adsorbents to remove total sulfur to less than 30 ppb_v. Each vessel has a diameter of 46" and an overall assembled height of 121". The natural gas desulfurization system is an existing feature installed in all SureSource power plants. Figure 2-13 shows the 3-D model view of one of the desulfurizer vessels.

2.2.5 Blowers

The SureSource Capture Pilot Plant utilizes several blowers throughout plant operation, which include the Fresh Air Blower, Anode Exhaust Blower and Flue Gas Blower. The Fresh Air Blower provides filtered air to the Cathode during all modes of operation, including standalone power generation, system start-up, hot standby and carbon capture. The Anode Exhaust Blower recirculates a carbon dioxide-rich anode exhaust gas during standalone power generation and carbon capture modes. The composition of the anode exhaust gas varies throughout different modes of operation dependent on the presence of fuel and extent of chemical reactions. The Flue Gas Blower intakes a slipstream from the PC plant flue gas and sends it through a treatment system and into the CEPACS system. A constant flue gas flow rate and discharge pressure is maintained to the CEPACS system during carbon capture mode; the Flue Gas Blower is off during all other modes of operation.

The approach is to use the existing inventory of blowers from FCE's SureSource 3000/4000 Power Plants for the SureSource Capture Pilot Plant. The process data for all cases were compared to the existing blowers' capacities to determine whether or not they are capable of handling all process requirements. It was determined that the Fresh Air Blower can be utilized from FCE's existing inventory (shown in Figure 2-14). However, a partial carbon capture mode of operation is desired where some of the anode gas is recycled to the fuel cell inlet, which causes the demand on the Anode Exhaust Blower to exceed that of the existing SureSource 4000 Anode Exhaust Blower. The process requirements for the Flue Gas Blower also exceeds the capacity of any of the existing blowers and requires a newly designed unit. Thus, specification documents were created for the Anode Exhaust and Flue Gas Blowers for vendor quotation by FCE's pre-qualified blower vendors. Table 2-20 provides the specifications for these blowers.

Figure 2-14. SureSource 3000 Fresh Air Blower

Table 2-20. Pilot Plant Blower Specification Summary

Fresh Air Blower	Anode Exhaust Blower	Flue Gas Blower
SureSource 3000 – existing equipment	New	New
8772 SCFM @ 91.9 IWC	2410 SCFM @ 150.1 IWC	12810 SCFM @ 116.7 IWC
200HP – 460V/3P/60Hz	100HP - 460V/3P/60Hz	350HP - 460V/3P/60Hz
TEFC	TEFC XP	TEFC
Insulation Class F	Insulation Class F	Insulation Class F
Design Code B	Design Code B	Design Code B
Class I, Division II, Group A-D	Class I, Division I, Groups B&D	Class I, Division II, Group A-D

2.2.6 Flue Gas Heat Exchangers

The Pilot Plant features several gas-gas and gas-liquid heat exchangers that allow thermal energy to be transferred within the process. This general design philosophy of retaining heat within the operational envelope of the power plant has been extensively used in the process design of the plant and is reflected in the heat and material balances discussed in Section 2.1.3.

The heat exchangers can be divided into two broad categories: the first category is of heat exchangers that recuperate heat from the cathode exhaust stream and the second category is of heat exchangers that recuperate heat from the anode exhaust stream. This section focuses on the cathode-side heat exchangers, which are also referred to as flue gas heat exchangers. The anode/fuel-side heat exchangers are covered in Section 2.2.9.

Heat contained in the ECM module cathode exhaust is recovered in the Flue Gas Heater (400-HX-502) and the Flue Gas Preheater (400-HX-503). As their names imply, these heat exchangers

transfer heat to the CO_2-rich flue gas entering the ECM module cathode inlet. Cathode inlet temperature control is established, in part, by operating a series of valves (XV-408A/B & XV-422A/B) that act as effective cold-side bypasses around these heat exchangers.

Performance specifications for each heat exchanger were developed based on data in the heat and material balances. Key parameters include: UA (overall heat transfer coefficient multiplied by heat transfer area), pressure drop, and overall heat duty. These parameters were tabulated and compared for all operating modes in order to arrive at a final specification for the Flue Gas Heater and Preheater. An abridged version of the specifications for one particular operational case (70% Carbon Capture) is shown in Table 2-21.

Table 2-21. Flue Gas Heat Exchangers Specifications Summary

Parameters	Units	Heat Exchanger Name	
		Flue Gas Pre-Heater	Flue Gas Heater
Tag	-	400-HX-502	400-HX-503
LMTD	°F	59	158
UA	Btu/hr./°F	24000	51265
ΔP	IWC	4	4
Design Temp	°F	1000	1200
Design Pressure	psig	5	5

The mole fraction of CO_2 present in the flue gas is, indirectly, an important factor that sets the size of these heat exchangers. Flue gas containing a lower (8%) CO_2 concentration requires a higher overall cathode-side flow rate, which in turn results in a higher heat duty and pressure drop in the heat exchangers.

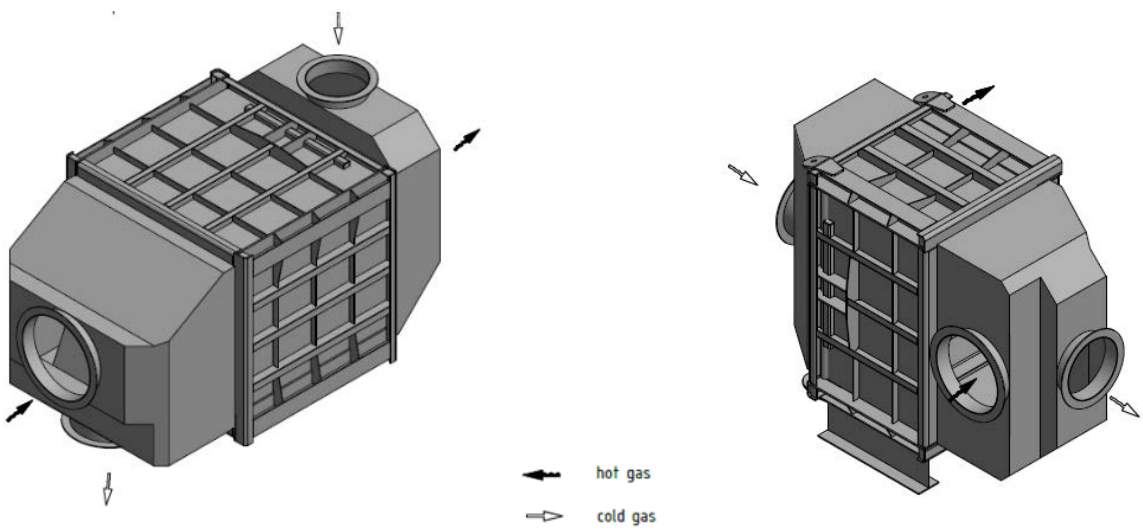

Figure 2-15. 3D Model of Flue Gas Heater *(left)*; and Flue Gas Preheater *(right)*

The RFQ package for the Flue Gas Heater and Preheater was completed with the assistance of AECOM and three vendors were preselected for the final bid review. A final vendor selection was made based on cost, lead time, pressure drop, material of construction, compatibility with process requirements, foot print and equipment supplier technical expertise. The final vendor selected proposed a heat exchanger with a dimpled plate-frame design, which effectively increases heat transfer area, reduces pressure drop and footprint and therefore, lowers cost of construction. Figure 2-15 shows the 3-D model of the Flue Gas Heater and Preheater based on final vendor selection.

2.2.7 Burner/Catalytic Oxidizer

The burner/catalytic oxidizer assembly has the primary function of controlling heat supplied to the ECM module (during start-up and certain operating modes) via the natural gas burner and secondary function of oxidizing residual H_2 and CO via the catalytic oxidizer. These gases are present in the anode recycle stream which mixes with flue gas and fresh air before being oxidized and sent to the ECM module cathode inlet. The burner process requirements are similar to those present in existing SureSource Power Plant designs; hence the same burner supplier was used for developing the design for the SureSource Capture Pilot Plant burner. Figure 2-16 shows a picture of the existing design for the SureSource power plant burner.

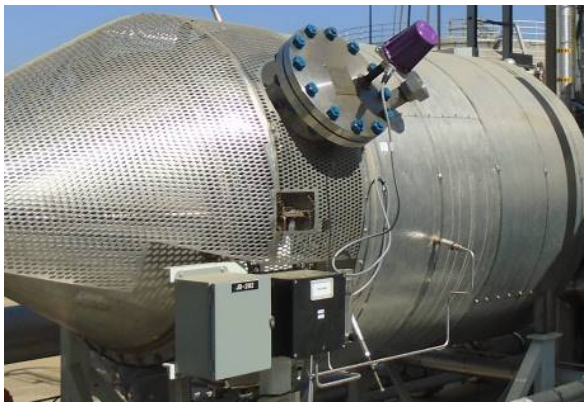

Figure 2-16. SureSource Power Plant existing burner/air heater

It was decided to co-develop the design of the burner and catalytic oxidizer with continuous feedback from both the burner supplier and catalyst supplier. This was because the burner/catalytic oxidizer assembly was required to incorporate features that would prevent flame impingement within the burner.

The burner and catalytic oxidizer are intended to be fabricated as two separate components that will be welded together in the field. The connecting location features an annular space that separates primary flue gas from flue gas that is bypassed around the burner/catalytic oxidizer assembly. The location also includes custom features for ease of assembly such as a recess around the insulation and an overlapping plate to allow a secure connection and prevent leakage. Velocity streamlines from a preliminary CFD analysis for the initial burner design iteration are shown in Figure 2-17.

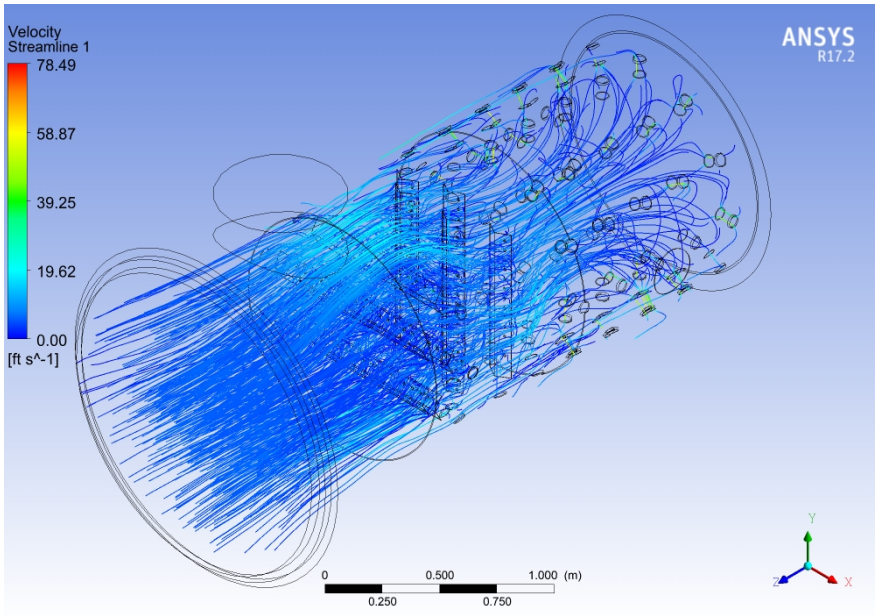

Figure 2-17. Burner/Catalytic Oxidizer Preliminary CFD Results

Results from the heat and material balances discussed in Section 1.3 showed that the flow rates of the flue gas, anode recycle gas, natural gas, fresh air and flue gas bypass varied significantly between operational cases. Therefore, all key operational cases were included in the burner/catalytic oxidizer specifications for careful consideration by both the burner vendor and catalytic oxidizer vendor.

2.2.8 ECM Modules

The MW-class FCE power plants (SureSource 1500™, SureSource 3000™, and SureSource 4000™) utilize modules containing 4 stacks each. The stacks operate at a nominal temperature of 600°C. Each stack consists of ~400 electrochemical cells in series. A schematic of a cell (including anode, electrolyte matrix, cathode and Interconnect) is shown in Figure 2-18. The fuel and air flow paths are arranged in a cross-flow configuration, separated by the electrolyte matrix. The ECM cell and stack technology is identical to the design of carbonate SureSource products. The naming convention simply indicates re-application of the technology in the CEPACS system for carbon capture from flue gases.

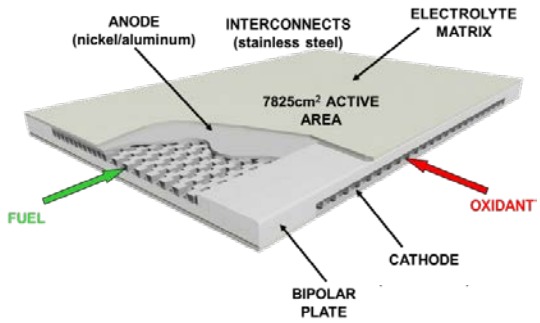

Figure 2-18. Cell Design and Materials

The cells are assembled into stacks which are then arranged into a module using a state-of-the-art manufacturing and assembly process in FCE's production facility located in Torrington, CT. Figure 2-19 shows the primary steps in the ECM module production and assembly process.

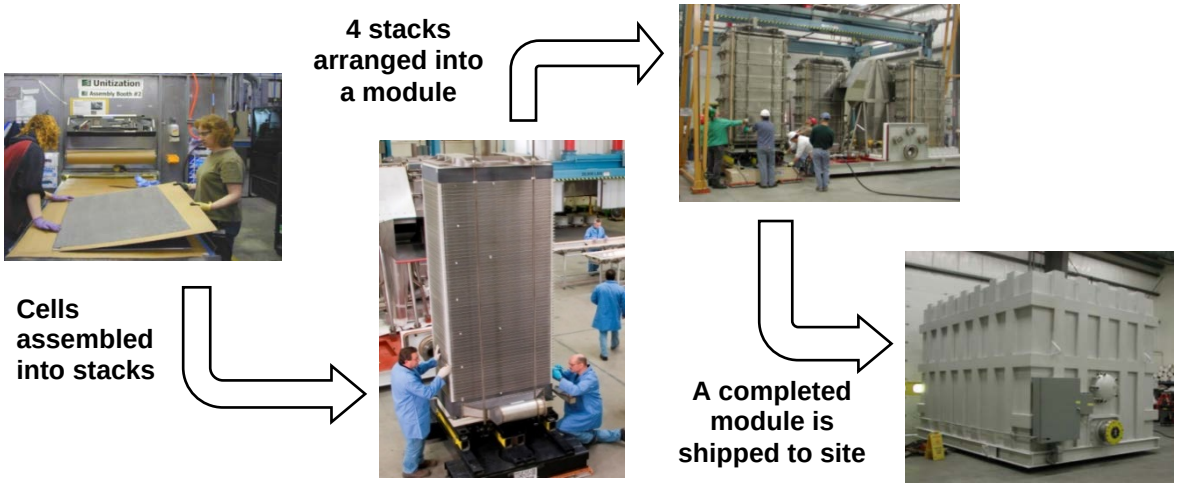

Figure 2-19. ECM Module Production Process

The existing SureSource 3000 utilizes a standard 4-stack module (C1400), which contains an internal oxidizer to oxidize unutilized fuel. Since the CEPACS system design requires an external oxidizer, the C1400 module required some modifications to remove the internal oxidizer. However, the 'topping' modules utilized in FCE's recently-released SureSource 4000 power plant contain a design modification which removes the internal oxidizer. An engineering study was

performed to determine if the SureSource 4000 'topping' module can be utilized for the unique operational and transitional cases pertaining to the CEPACS system. The conclusion of this study was that the SureSource 4000 'topping' module was suitable for the CEPACS system requirements without any additional design modifications. These modules are currently in the alpha design stage and are undergoing operational testing at FCE's first SureSource 4000 installation in Danbury, CT.

2.2.9 Anode Gas Cooling and Fuel Humidification System

System Overview

The anode exhaust gas stream is rich in CO_2 and is essential to the carbon capture operation of the SureSource Capture Pilot Plant. A system has been developed for cooling the anode exhaust gas to prepare it for purification of CO_2. This system, as described in previous sections, consists of heat exchangers, packed columns, reaction vessels and rotating equipment. An overview of this system is shown in Figure 2-20.

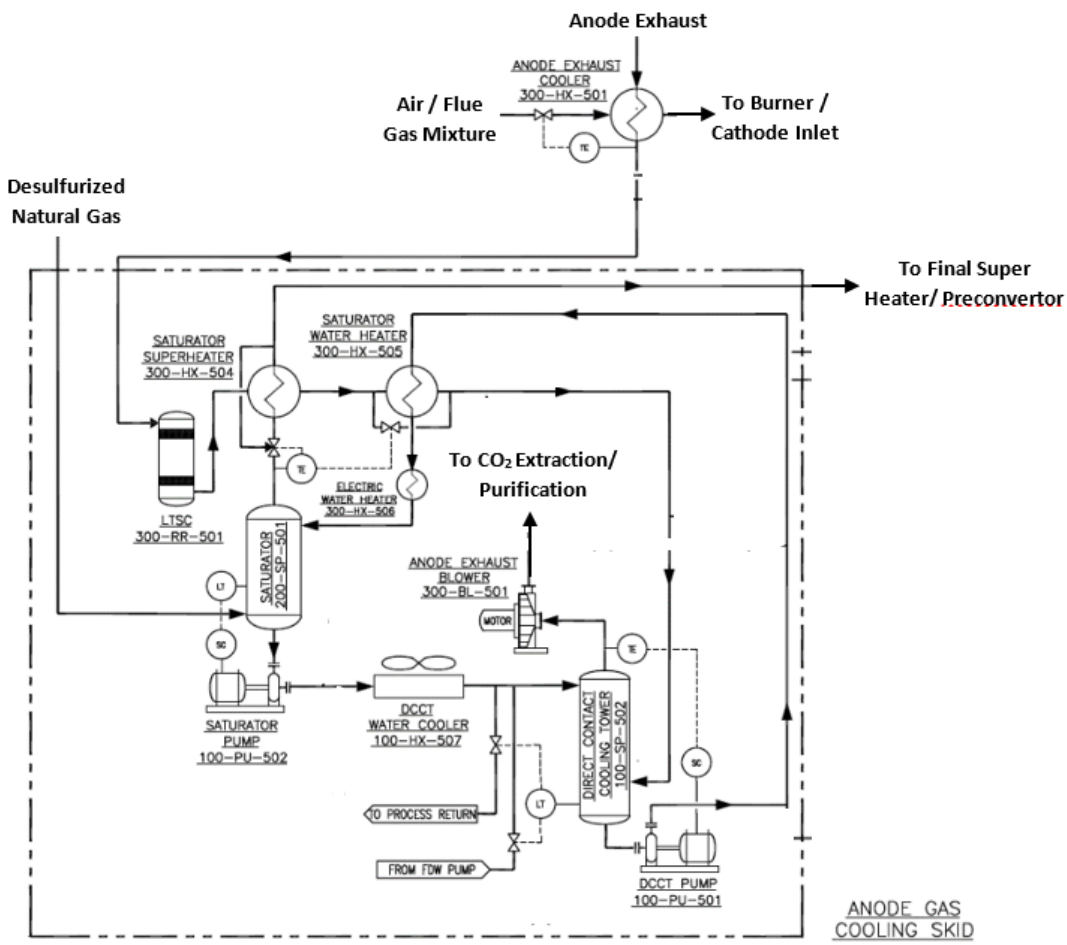

Figure 2-20. Simplified Process Diagram of Anode Gas Cooling and Fuel Humidification System

Hot anode exhaust gas enters this system and transfers part of its heat to the inlet air/flue gas mixture entering the cathode via the Anode Exhaust Cooler (Equipment tag # 300-HX-501). The anode gas then goes through a low temperature shift reaction vessel (Equipment tag # 300-RR-501) which converts most CO present in the anode gas to additional CO_2. The shift reaction generates heat, which is subsequently transferred to the fuel humidification process stream via the Saturator Super Heater (equipment tag # 300-HX-504) and the Saturator Water Heater (Equipment tag # 300-HX-505).

At the exit of the Saturator Water Heater, the anode gas is close to its dew point and enters the Direct Contact Cooling Tower (Equipment tag # 100-SP-502) which condenses a significant amount of the moisture present in the anode gas for use in the fuel humidification process. This is an important step in the anode gas cooling process as it assists the Pilot Plant in achieving water neutral operation (at certain ambient conditions).

The fuel humidification process begins at the Saturator (Equipment tag # 200-SP-501) and continues in the Saturator Super Heater (Equipment tag # 300-HX-504), Fuel Humidifier (Equipment tag # 200-HX-201) and Preconverter (Equipment tag # 200-RR-203). At the Preconverter outlet, the fuel/steam mixture is ready to be introduced to the ECM module anode inlet.

Heat Exchangers

The Anode Exhaust Cooler, Saturator Super Heater and Saturator Water Heater are critical heat exchangers to the Anode Gas Cooling System and were selected using the process outlined in Section 2.2.1. AECOM provided assistance with the selection and bid review for the Anode Exhaust Cooler, whereas equipment specification and selection was independently conducted by FCE for the Saturator Super Heater and Saturator Water Heater. Table 2-22 summarizes the heat exchanger specifications for one operational mode (70% Carbon Capture) used in the RFQ packaged provided to vendors for the anode-side heat exchangers.

Table 2-22. Anode-Side Heat Exchanger Specifications (70% CC)

Parameters	Units	Heat Exchanger Name		
		Anode Exhaust Cooler	Saturator Super Heater	Saturator Water Heater
Tag	-	300-HX-501	300-HX-504	300-HX-505
LMTD	°F	158	79	66
UA	Btu/hr./°F	21313	6712	10000
ΔP	IWC	4	5	5
Design Temp	°F	1200	950	950
Design Pressure	psig	5	5	100

Multiple bids were received for all heat exchangers and a final vendor was selected for each exchanger based on the vendor's predicted pressure drop, flow arrangement, heat transfer effectiveness, costs, and experience delivering similar units. Figure 2-21 shows the 3-D model of the Anode Exhaust Cooler for the final vendor selected, with the nozzle orientations as required for the equipment layout. The custom skid design (detailed in Section 3.3) required precise specification of the heat exchanger nozzle locations to meet packaging constraints. Footprint was a major concern during the selection process, particularly for the Saturator Superheater and Saturator Water Heater. The vendor incorporated feedback from FCE and adjusted the design parameters on these heat exchangers to accommodate them within the given footprint. This was based on a compromise between pressure drop and footprint, as the smaller footprint (to accommodate a truck-shippable skid design) required a slightly higher pressure drop.

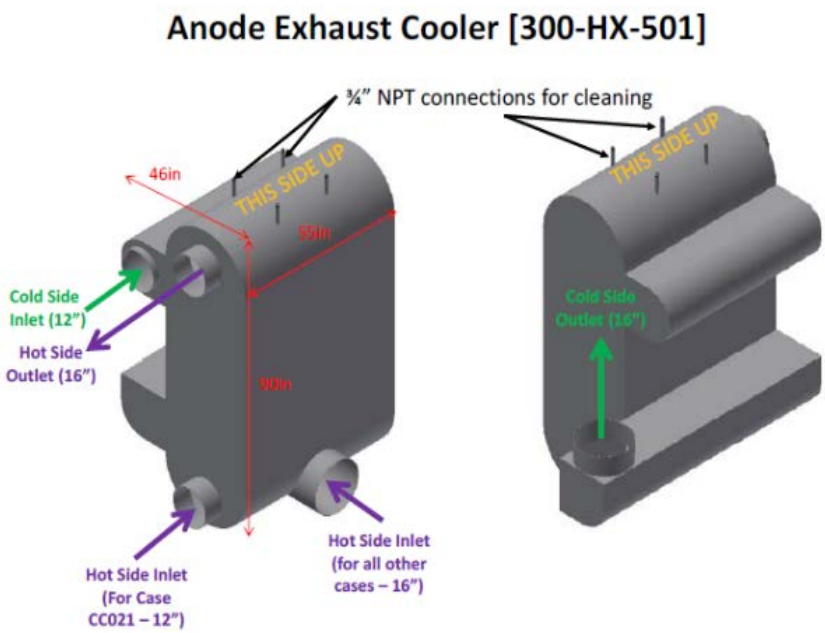

Figure 2-21. 3-D Model with Orientations for Anode Exhaust Cooler

<u>Low Temperature Shift Converter (LTSC)</u>

The low temperature shift converter is an FCE-designed reaction vessel. CFD simulations were performed on this vessel to see the impact of various inlet and outlet nozzle sizes/orientations and ensure uniform space velocity through the catalyst. A catalyst vendor was identified that was capable of providing the required catalyst. Feedback was also obtained from the vendor regarding adequate vessel size and reaction bed depth. Figure 2-22 shows a plan view of the flow distribution for the LTS reaction vessel. The design provides adequate flow distribution through the catalyst bed. (The dark blue area in the figure is a dead space above the reaction zone that represents an off-center cap in the vessel head used for catalyst loading.)

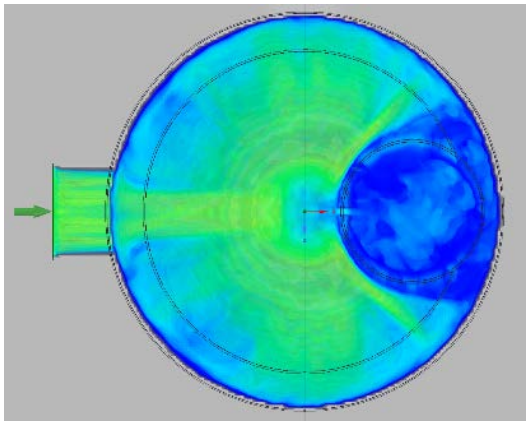

Figure 2-22. LTS Vessel CFD Simulation Results

Water Recovery System overview

The DCCT and the Saturator work together to achieve water independent operation without requiring any boiling of water to dryness to produce the steam required for the anode. The DCCT is a column consisting of packing that enhances vapor-liquid contact surface area, allowing moisture-rich anode gas to travel upward through the vessel while water droplets are removed from the gas and collected in the DCCT sump.

This water is then pumped to the Saturator Water Heater, where it is heated to a temperature below its boiling point. The hot water then contacts the dry pilot plant fuel gas within the Saturator packed tower. After the fuel gas is humidified in the Saturator, it is sent to the Saturator Super Heater for further superheat.

All of the water remaining in the Saturator (after complete humidification of the fuel) collects in the Saturator sump, where it is then pumped to the DCCT Water Cooler. This is a fin-fan cooler which uses ambient air to lower the temperature of the process water before it is recycled back to the DCCT.

DCCT and Saturator

The DCCT and Saturator are mass (and heat) transfer columns which were designed in collaboration between FCE and supplier(s) of mass transfer equipment. Specifications were created for the internal features of these vessels including packing, inlet nozzles and mist eliminators. These specifications were based on the design criteria for liquid holdup, flooding %, pressure drop and number of stages required to achieve gas/liquid separation.

The development of specifications was a continuous process that incorporated feedback from vendors. Figure 2-23 shows the schematic design overview of these vessels as established in the preliminary stages of the specification development process. The fully developed specifications were provided to pre-selected vendors who provided final quotes based on the standard RFQ process. The final vendor was selected after careful consideration of cost, feature geometry and hydraulic calculations.

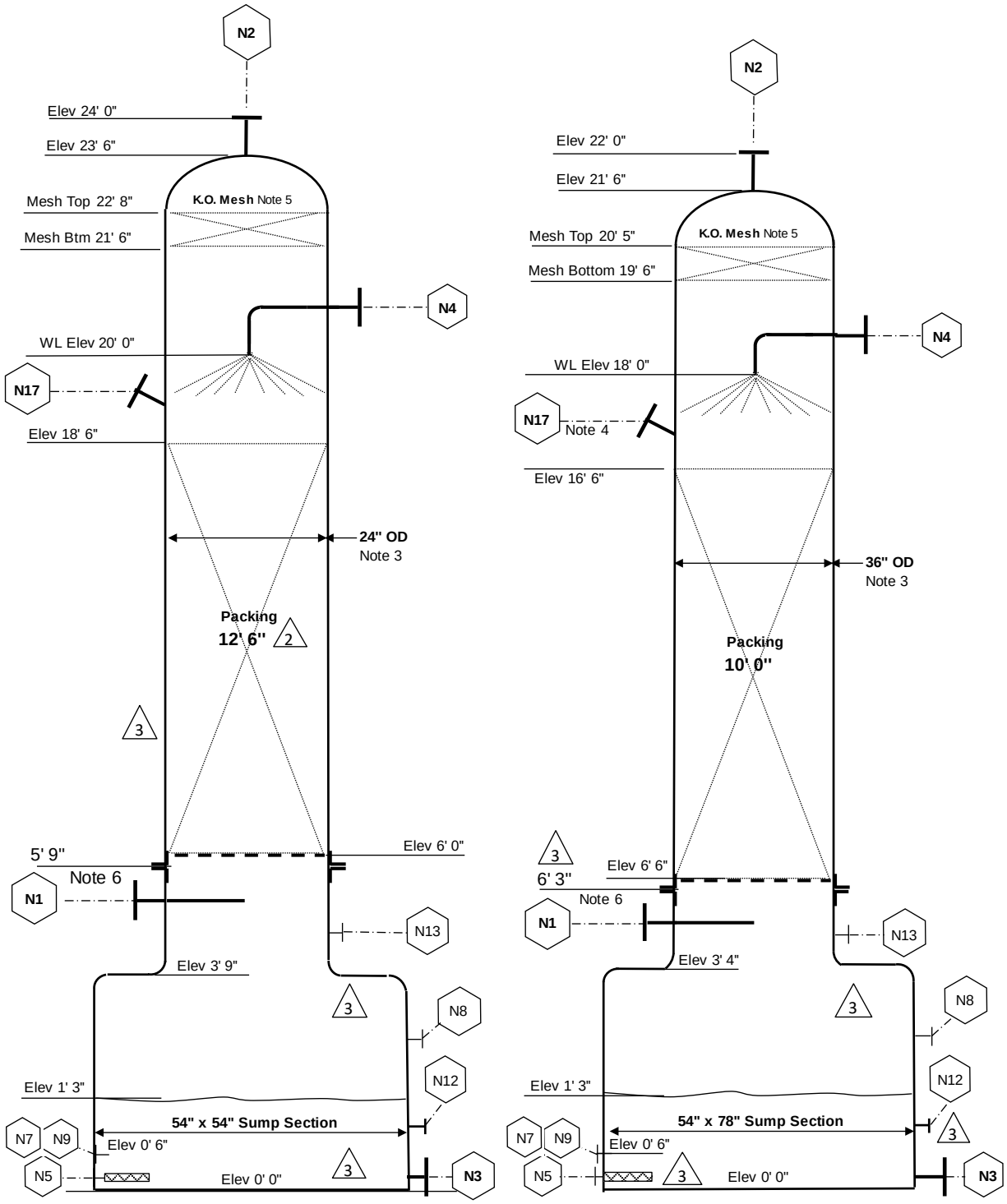

Figure 2-23. Schematic Overview of Saturator *(left)* and DCCT *(right)* Packed Towers

Both the DCCT and Saturator feature specialized components to enhance mass transfer, such as high contact area random packing and pressure-equalizing liquid distributors. Figure 2-24 shows the column packing and liquid distributor provided by the pre-selected vendor.

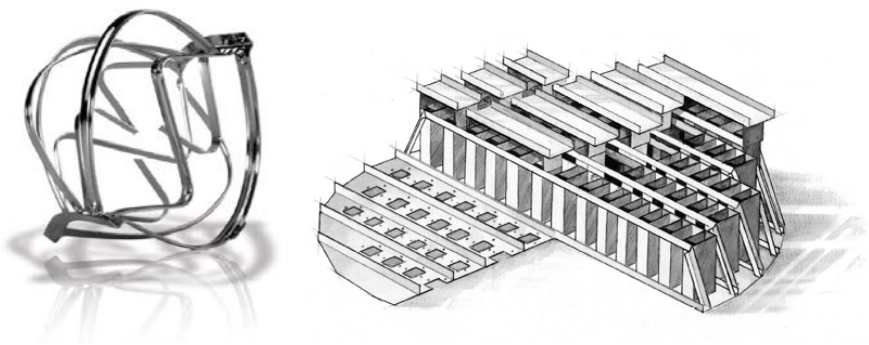

Figure 2-24. Column Packing *(left)* and Liquid Distributor *(right)* used in the DCCT and Saturator

DCCT Water Cooler

The DCCT water cooler is a simple fin-fan coil-based heat exchanger that uses ambient air to lower the temperature of the process water feeding the DCCT from the Saturator. The standard FCE equipment selection process was used for this heat exchanger as outlined in Section 2.2.1. The 70% Carbon Capture operating case at 104°F ambient temperature set the design for this heat exchanger. Freeze protection capability was also considered in the design. A final vendor, offering COTS equipment, was selected for this heat exchanger based on the optimum footprint, cost and operational flexibility at low temperatures. A preliminary arrangement drawing of the selected DCCT water cooler is shown in Figure 2-25.

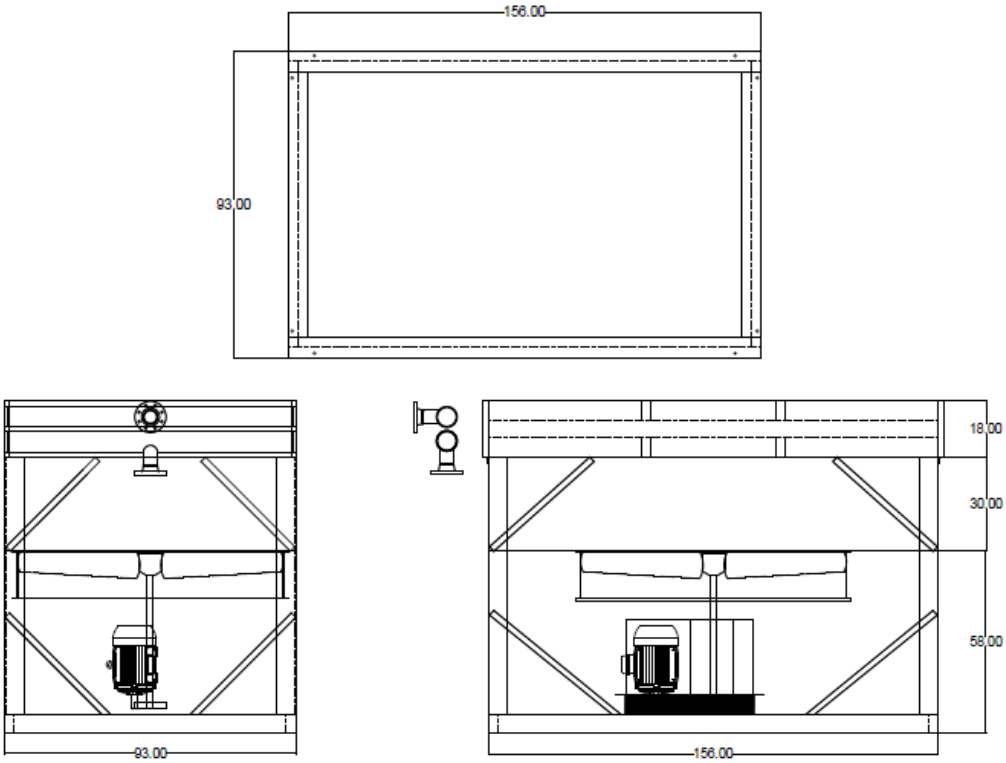

Figure 2-25. DCCT Water Cooler Preliminary Arrangement Drawing

Fuel Humidifier

The humidified fuel enters the Fuel Humidifier, which is a shell and tube heat exchanger that carries humidified fuel on the tube side and cathode exhaust on the shell side. This heat exchanger is a vendor-supplied piece of equipment that is a carried over from the SureSource 3000 design. The Fuel Humidifier is the final stage of super heat in the fuel humidification process before the anode gas is sent to the Preconverter (as mentioned previously). Figure 2-26 shows a photo of the Fuel Humidifier and model of the Preconverter, both carry-over items from the SureSource 3000 plant.

Figure 2-26. Fuel Humidifier *(left)* and Model of Preconverter *(right)*

Fuel Preconverter

The Preconverter is an FCE-designed reaction vessel with catalyst supplied by a well-known catalyst vendor. It is also carried over from the SureSource 3000 design. This reaction vessel pre-converts a small fraction of the steam and methane present in the fuel-steam mixture to hydrogen and carbon dioxide. Alternatively in some modes of operation, the Preconverter methanates the humidified fuel stream containing some recycled H_2 and CO_2 from the CO_2 purification process. FCE previously conducted in-house testing to confirm the activity of FCE's standard Preconverter catalyst to effectively methanate the fuel stream when operated at the system design conditions.

2.2.10 Anode Gas Compressor

The gas that leaves the ECM anodes (Anode Exhaust Gas) contains the CO_2 that has been transferred from the Flue Gas via the fuel cell reaction plus hydrogen, water, carbon monoxide and some nitrogen. It is necessary to further process the gas to ultimately recover the CO_2. This is accomplished through conversion of CO to CO_2, water removal, and then compression in preparation for CO_2 separation via liquefaction.

The Anode Exhaust Gas is first processed through the Anode Gas Cooling skid to shift the CO to CO_2 and cool the gas to remove as much water as possible. The cooled, shifted gas stream contains about 79% CO_2, 17% H_2, and 2.4% H_2O upon exiting the water separator.

The process requires compression of the anode exhaust gas from ~17 psia to 265 psia while limiting the gas temperature. Also required is the recovery of some heat of compression to heat another gas stream for regeneration of the downstream dryer. Table 2-23 outlines the primary performance requirements for the CO_2 compressor and Table 2-24 shows the compressor specifications for the selected unit, which is also depicted in Figure 2-27.

Table 2-23. CO_2 Compression Performance Requirements

	INLET	OUTLET
Flow (acfm)	2,000	99
Temperature (°F)	80	75
Pressure (psia)	17	265
Water (%)	3.0	0.2
Residual Oil (ppm)	0.0	0.01

Table 2-24. Selected CO_2 Compressor Specifications

PARAMETER	SPECIFICATION
TYPE	Reciprocating
CODE	Non-API 618 Unit. Built per ISO 13631 to manufacturer's standards.
STAGES	4 throw, 3 stage
STROKE	4.5"
COMP RATED BHP	1360
COMP RATED SPEED (RPM)	1200
MAX ALLOW. WORKING PRESS. (PSIG)	200 psig (1st & 2nd stage); 635 psig (3rd stage)
Motor	750 HP, 4160V, 3 Ph, 60 Hz, 6 pole
Area Classification	Class 1 Division 2 Group B, D

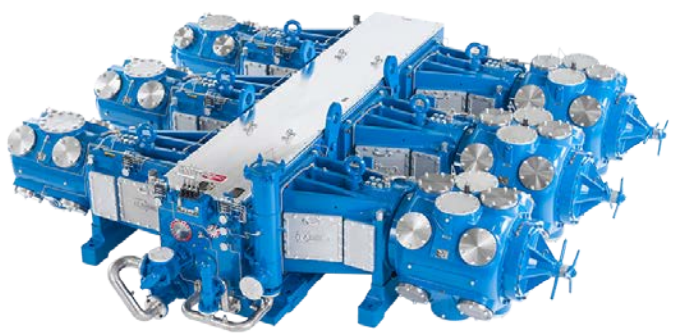

Figure 2-27. 3-Stage Reciprocating Compressor

AECOM generated an engineering specification and bid package per review and final approval of FCE. AECOM sought bids from five prequalified vendors. Three vendors responded with bids for multi-stage reciprocating type compressors and two vendors offered axial screw type compressor.

The specification emphasized low power consumption as a key parameter in order to maximize the net power output from the pilot system. The preferred bid was for a 3-stage reciprocating unit which offered the lowest power consumption for at a favorable price. The unit includes inter-stage dry cooling and water separation to meet the performance requirements. The integrated anode gas compression skid can be seen in Figure 2-28.

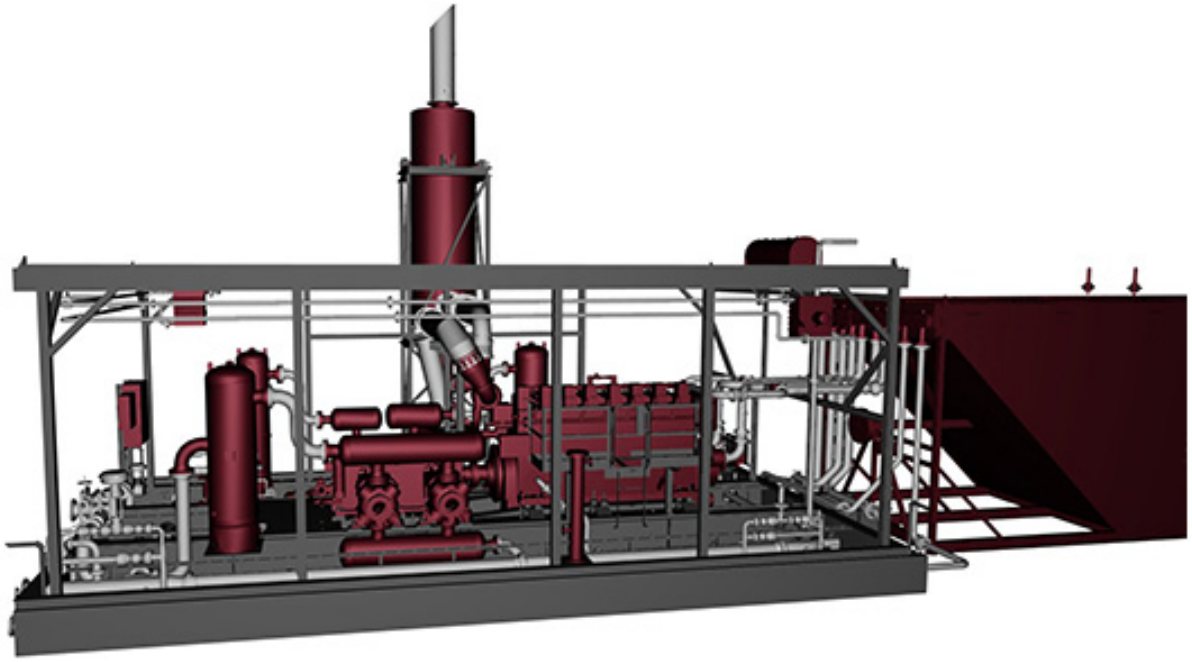

Figure 2-28. Integrated Anode Gas Compression Skid, Typical

2.2.11 CO2 Purification

The primary objective of the CO_2 purification system is to separate CO_2 from the compressed CO_2/H_2 mixture obtained at the CO_2 compressor outlet. This process requires a combination of separators, heat exchangers, and process chillers. The compressor outlet gas is first sent to a separator which separates entrained liquids (such as water and oil) from the process stream. It is then sent to a regenerative dryer that further eliminates all moisture content from the process, after which the gas is cooled in two stages: using compressed CO_2 in the first stage, and the absorption chiller with heat extraction from the cathode in the second stage.

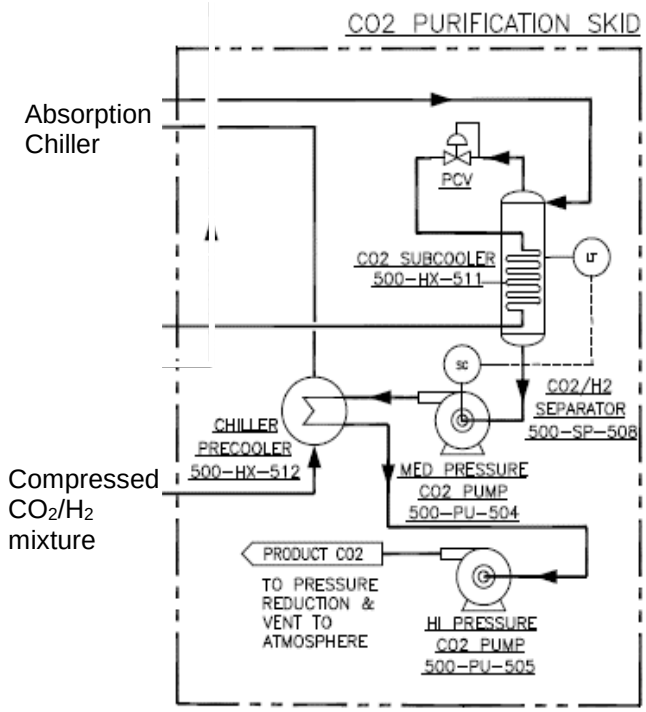

Figure 2-29. Simplified Process Diagram of CO_2 Purification System

This cooling is sufficient to condense gaseous CO_2 into a liquid state, at which point it enters the CO_2/H_2 separator. CO_2 collects at the bottom of the separator, whereas hydrogen rises to the top and is separated from the process stream (in equilibrium with gaseous CO_2). The extracted hydrogen is then sent through a pressure letdown valve and through a heat exchanger coil that is submerged in the liquid CO_2, which prevents CO_2 from boiling by continually extracting heat from it and transferring the heat to the H_2-rich gas present in the heat exchanger coil. The H_2-rich gas is ultimately recycled, where a portion is sent to the ECM anodes and the remainder is sent to the cathode inlet of the ECM module after oxidation in the catalytic oxidizer. Figure 2-29 shows a simplified process diagram of the CO_2 purification system.

The CO_2 purification system contains two heat exchangers that act as coolers for the liquid CO_2. The first heat exchanger is the Chiller Pre-Cooler (Equipment tag # 500-HX-512), which transfers heat from compressed liquid CO_2 on the cold side to the compressed gaseous CO_2/H_2 mixture prior to its entry in the absorption chiller. This heat exchanger is vendor supplied equipment that has been selected based on the standard selection process outlined in Section 2.1. The second heat exchanger is FCE/vendor designed equipment that was preliminarily assumed to be located outside the CO_2/H_2 separation vessel. However, based on the desire to mitigate against the effects of heat gain into the CO_2/H_2 separation vessel, it was decided to submerge the heat exchanger below the liquid CO_2 level in the separator. This heat exchanger and separation vessel equipment will be fabricated by FCE with the tube-coil supplied as a commercial off the shelf (COTS) item. The tube-coil has been selected to act as an orifice as it has a 60 psig pressure drop across it in order to reduce the duty required from the pressure let-down valve located upstream of the coil. The specifications for this tube-coil are shown in Figure 2-30.

Pipe Specifications			
Material	SS 304/310		
Pipe Schedule	Standard (Sch. 40)		
Pipe Size	1" Nominal		
Coil Geometry			
Coil Length	L	30	in.
Coil Diameter	D	11	in.
Tube Diameter	d	1.05	in.
Tube Thickness	t	0.11	in.
Number of turns	#	4	
Unsprung coil length	C	125	in.
Uncoiled length	a	24	in.
Total length	T	173	in.
Process Information			
Mass Flow Rate		2584	lbs/hr
Temperature		-55	°F
Inlet Pressure		138.4	psig
Required Coil ΔP		60	psid
Stream Composition			
Hydrogen		50-55	%
Carbon Monoxide		1-3	%
Carbon Dioxide		45-50	%
Nitrogen		1-3	%

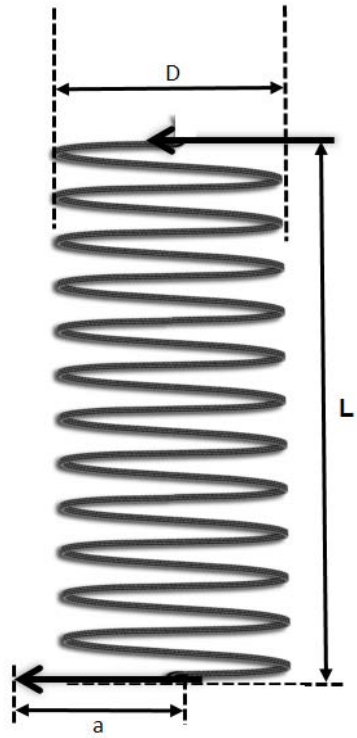

Figure 2-30. Tube-Coil Specifications

Gas Dryer

Liquefaction of the CO_2 occurs at a temperature of -52.6°F via the Absorption Chiller. Prior to conveying the anode gas stream to the chiller, water must be removed from the stream so the water concentration is below 10 ppm. Otherwise ice formation will occur which could eventually block gas flow through the chiller.

As previously discussed, water removal starts by processing the anode gas through the Anode Gas Processing equipment. This is accomplished via temperature reduction in the DCCT where the incoming water content is approximately 34%. Further removal occurs by cooling the gas to condense water in heat exchangers and liquid separators prior to conveyance to the Anode Gas Compressor. Within the multi-stage compression system, additional water is removed at each stage by cooling and liquid separation. A final step of cooling to the dew point of approximately 40°F and separation occurs at the compressor outlet.

Further cooling and separation cannot readily accomplish water removal to 10 ppm. Therefore, absorption on a desiccant bed is used to remove the water to achieve the required moisture content. The drying process employs a Regenerative Gas Dryer to provide continuous drying for the process. During operation, the compressed anode gas is directed into one absorption bed. A heated dry gas is fed to the previously-used bed (which has reached its drying capacity to meet the dryness specification) and regenerate it back to its original drying capacity. The Regenerative Gas Dryer automatically switches the anode gas and drying gas to maintain a continuous flow of dried gas with a water content below 10 ppm to the chiller to protect against ice formation in the chiller.

Quotes were received for standard product offerings from two leading vendors of packaged drying systems in response to the Process Requirements listed in Table 2-25 below. The preferred

offering has been selected for this application based on a lower comparable price and meeting the performance requirements. Table 2-26 shows the specifications for the Regenerative Gas Dryer.

Table 2-25. Gas Dryer Performance Requirements

	INLET	OUTLET
Flow (acfm)	90.7	110
Flow (scfm)	1,876	1,875
Temperature (°F)	37	122
Pressure (psia)	268.5	268
Water (%)	0.05	0.001

Table 2-26. Gas Dryer Specifications

PARAMETER	SPECIFICATION
TYPE	Regenerative
SIZE	70" X 35" X 75", 1,750 lbs
AUX. HEATER POWER	Electric, 7.5 kVA, 460 V, 3 phase, 60 Hz
Area Classification	Class 1 Division 2 Group B, D

Ammonia Absorption Chiller – CO_2 Liquefaction

Once the Anode Exhaust gas is compressed and dried so the water content is below 10 ppm, the next step is to liquefy the CO_2. The gas composition at this point is 78% CO_2, 20% H_2, 1% CO and 1% N_2. When CO_2 is chilled to -52.6 F at 265 psia, it liquefies and separates from the gas into a 99.5 % pure CO_2 liquid stream with trace N_2, CO and H_2 in equilibrium with a gas of 50% H_2, 46% CO_2, 2% CO and 2% N_2.

An Ammonia Absorption Chiller provides the refrigeration capacity to chill the gas to the target temperature. Since thermal energy recovered from the process drives the refrigeration cycle, the chiller's parasitic electric load is substantially less than that of a mechanical chiller. An example of an Absorption Chiller is shown in Figure 2-31.

AECOM generated an engineering specification and bid package per review and final approval of FCE. The performance requirements were developed to emphasize a high coefficient of performance (COP), in order to maximize system efficiency. Also highlighted was the flexibility in the temperature of the input hot gas for the generator portion of the absorption cycle.

AECOM sought bids from four (4) prequalified vendors including Energy Concepts, Sep Pro Systems, Colibri and Thermax. Two vendors declined to bid due to lack of involvement in the North American market (Colibri) or the inability to reach the required temperature with their Lithium Bromide based technology (Thermax). Two vendors responded with bids for Ammonia Absorption Chillers – Energy Concepts and Sep Pro Systems. Energy Concept's bid for a multiple stage ammonia absorption due to its attractive performance at a comparable price. A summary of the specifications can be seen in Table 2-27.

Energy Concepts Background and Offering: Over the past thirty years, Energy Concepts has designed and supplied twenty-five ammonia absorption refrigeration plants. Four of those plants were installed at hazardous area rated Class 1 Division 2 locations: two at oil refineries, one at a power plant, and one at a natural gas treatment plant. Most of the remaining ThermoChillers were installed at food processing plants, including plants handling vegetables, fish, beef, chicken, and dairy.

The driving heat for these plants has been from a wide variety of sources: engine jacket coolant, turbine exhaust heat, biomass boiler heat, solar thermal heat, geothermal heat, and process heat. The temperature of the driving heat has ranged from 160°F (jacket heat and geothermal heat) to over 850°F (gas turbine exhaust).

Most of the supplied ThermoChillers have been cooled by cooling water from a cooling tower. Three were cooled by heating hot water (Thermosorbers), and two were cooled by air cooling.

The supplied ThermoChillers have capacities ranging from 10 tons to 2000 tons. The 2000 ton unit is for turbine inlet air chilling of a 50 MW peaking turbine. Most of the supplied units have capacities in the range of 80 to 250 tons.

The refrigeration temperature supplied by these ThermoChillers range from +34°F to minus 50°F. Most are for sub-zero applications. Four of the 80 ton units are rated at minus 26°F, for the cold storage warehouse market.

Energy Concepts proposed to provide the ThermoChiller through a sequence of tasks to design, fabricate, install and commission a waste heat powered absorption chiller that condenses CO_2 out of the anode exhaust gas from the fuel cell. The Thermochiller will meet the specified conditions presented in the RFQ of March 20, 2017. Those conditions include the requirement for 95 tons of refrigeration at -52.6F.

Table 2-27. Absorption Chiller Specifications

MANUFACTURER	Energy Concepts
MODEL	ThermoChiller
TYPE	Ammonia Absorption Chiller
SIZE	34.8 x 7 x 10.8, 17,000 lbs
POWER	45 kW 480 V, 3 Phase, 60 Hz
Area Classification	Class 1 Division 2 Group B, D

Figure 2-31. Absorption Chiller

2.2.12 Process Cooling System

The Carbon Capture pilot system requires a continuous flow of cooling fluid for several processes over the full range of possible ambient temperature conditions. To maximize operation flexibility, the Design Basis specifies the extreme Dry Bulb temperature range of -20°F to 104°F. In order for the process to retain the cooling fluid during an unpowered shut down when the ambient dry bulb temperature is below 32°F, it was decided to use a 60% Ethylene Glycol solution which freezes at -49°F.

The Carbon Capture Pilot Plant contains three (3) sub-systems that require cooled heat transfer fluid for Carbon Capture operations: the Ammonia Absorption Chiller Condensers, the Glycol Cooler heat exchanger and Dryer Pre-cooler 1 and 2 heat exchangers. The Glycol Cooler and Dryer Pre-cooler 1 exchanger require the cooling fluid inlet temperature to be a maximum of 70°F. One of the Absorption Chiller condensers also requires cooling fluid at or below 70°F. The other condenser can accept a cooling fluid inlet temperature up to 90°F.

A mechanical chiller can provide a continuous flow of 70°F cooling fluid but at the cost of a continuous high parasitic power load. A closed circuit fluid cooler can also produce a continuous flow of 70°F cooling fluid at a significantly reduced parasitic load by employing evaporative cooling with a water spray on the fluid cooler coils. However, the capability to produce cooling fluid at 70°F is limited to a 65°F wet bulb temperature (assuming a 5°F approach) which coincides to a 78°F dry bulb temperature at 50% Relative Humidity.

During the hot day conditions (85°F wet bulb, 104°F dry bulb), the hybrid fluid cooler can produce a 90°F cooling fluid which can be used for one of the absorption chiller condensers. In comparison, a dry cooler's lowest achievable cooling fluid temperature would be 114°F (assuming a 10°F approach) in hot day conditions.

Therefore, a hybrid cooling system with a closed circuit fluid cooler and a mechanical chiller offers the flexibility to provide cooling fluid at the required temperatures at a higher efficiency over the range of ambient design temperatures. This design will use less energy overall than a mechanical chiller alone by employing the closed circuit fluid cooler to provide a portion of cooling fluid when operating at the hottest ambient conditions. The fluid cooler's load will increase at lower ambient temperatures reducing the load on the mechanical chiller to zero at and below the ISO condition ambient temperature. The process requirements and specifications for the hybrid cooling system can be seen in the tables below (Table 2-28, Table 2-29, Table 2-30 and Table 2-31) and illustrations can be seen in Figure 2-32 and Figure 2-33.

Table 2-28. Closed Circuit Fluid Cooler Process Requirements Summary

	INLET	OUTLET
Cooling Fluid Flow (gpm)	1,659	1,659
Cooling Fluid Temperature (°F)	98	90
Cooling Fluid	60% Ethylene Glycol, 40% Water	60% Ethylene Glycol, 40% Water
Recirculation Water Flow (gpm)	1238	
Make Up Water (gpm)	12.6	
Blow Down (gpm)	2.9	

Table 2-29. Closed Circuit Fluid Cooler Specifications

MANUFACTURER	Marley
MODEL	MHF7111
TYPE	Closed Circuit Fluid Cooler
COOLING CAPACITY	410 Cooling Tons
SIZE	12' x 24' x 21.5', 32,100 lbs
POWER	60 HP Fan, 2 x 7.5 HP Pumps
Area Classification	General Purpose

Table 2-30. Mechanical Chiller Performance Requirements Summary

	INLET	OUTLET
Cooling Fluid Flow (gpm)	470	470
Temperature (°F)	88	70
Condenser Flow (gpm)	1,260	1,260

Table 2-31. Mechanical Chiller Specification Details

MANUFACTURER	Trane
MODEL	RTWD – 150 x 2
TYPE	Water Cooled Mechanical Chiller
CHILLER CAPACITY	2 x 160 Refrigeration Tons
SIZE	2 x 133" x 76" x 50"
POWER	2 x 380 Amps, 460 V, 3 phase, 60 Hz
Area Classification	General Purpose

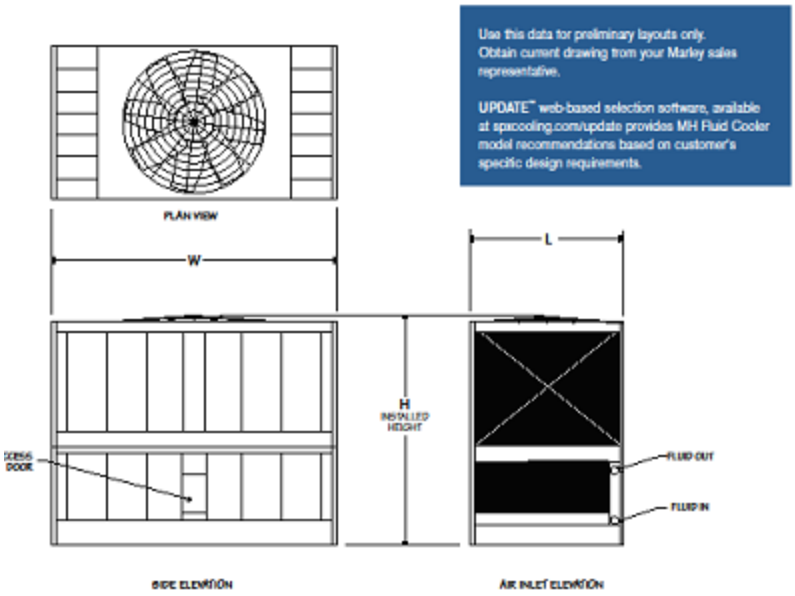

Model	Dimensions			Shipping Weight lb		Motor	Pump
	L	W	H	Weight	Heaviest Section	hp	hp
MHFT111	11'-11"	23'-10⅝"	21'-4⅝"	32,100	20,010	50 - 75	5/7.5
MHFT113	13'-11"	25'-10⅝"	21'-4⅝"	38,070	24,620	50 - 75	5/7.5

Figure 2-32. Closed Circuit Fluid Cooler Information Sheet

Figure 2-33. Water-Cooled Mechanical Chiller

2.3 Mechanical Engineering

2.3.1 Introduction

FCE employed a detailed design approach that allows for a fast and predictable manufacturing and installation process. The process began by gathering inputs from the process and electrical design teams, P&ID, and equipment selections. A fully-detailed 3-D model was created from this information, down to the nuts and bolts. Having this level of detail included in the model ensures that everything is accounted for up-front and there are few surprises during manufacturing, procurement and installation.

During the detailed design process, skid designs were reviewed and critical components were singled out for analysis using either Finite Element Analysis (FEA) computational modeling or fluids modeling. This analysis was done in-house to shorten development time and allowed for tighter integration of process components into the skid structure.

FCE has developed and maintains a comprehensive in-house piping specification document. When designing on-skid or interconnection piping, this specification was heavily utilized to make decisions on mechanical piping design. The pipe design specification is based on commercially available specifications but also tailored based on the years of experience FCE has dealing with the unique process conditions found in and around the fuel cells.

After the 3-D model is fully developed, detailed information from the model is used to populate a project bill of materials (BoM). The BoM is also used in later project phases for procurement tracking, scheduling of component deliveries and configuration management. As the work proceeds into the manufacturing process, fully detailed engineering drawings will be created from the detailed 3-D models. These drawings are either completed in house or in collaboration with vendors in order to tailor the drawings to the unique capabilities of a specific fabricator.

The CEPACS Pilot Plant requirements have driven a design based on modularized skids. This means that each ‘skid’ is comprised of several component parts that are manufactured elsewhere and will be assembled on site. The benefits of such a design philosophy are fivefold: reduced cost due to productivity-enhancing indoor fabrication shop conditions and minimized fieldwork, increased safety due to well-controlled manufacturing conditions, improved logistics, improved quality due to controlled shop conditions, and reduced plant footprint. The cost reduction is realized by relying heavily on shop (rather than field) fabrication which comes with a cheaper hourly price tag and higher productivity.

Since the skids will be manufactured at remote facilities and shipped to the site, shipping size and weight constraints are very important to the design effort. Large skids are comprised of several shippable sub-skids. The skids themselves are designed so that all power distribution and control input/output (I/O) communication is managed within the boundaries of the individual skids with often only a few power and one communication line(s) tying back to the main plant PLC and electrical distribution system. This allows each skid manufacturer to perform acceptance tests before the unit leaves their facility. This design philosophy was utilized based on requirements and constraints found through the development of the CEPACS plant general arrangement and layout.

2.3.2 General Arrangement

The CEPACS general arrangement has been developed and refined over the life of the design effort in order to satisfy many constraints, requirements, and safety and maintenance concerns.

The first constraint that had to be addressed was the site itself. The site at the Barry Generation Facility is constrained by permanent structures to the east and west of the plant and a truck access

lane to the north. This creates a fixed area in which the plant can be built without the possibility of expanding the plant footprint outward as the design was developed. Figure 2-34 shows an isometric view of the overall plant, color coded by skid or plant area. Process skids and key equipment are identified in the annotated plan view schematic, shown in Figure 2-35.

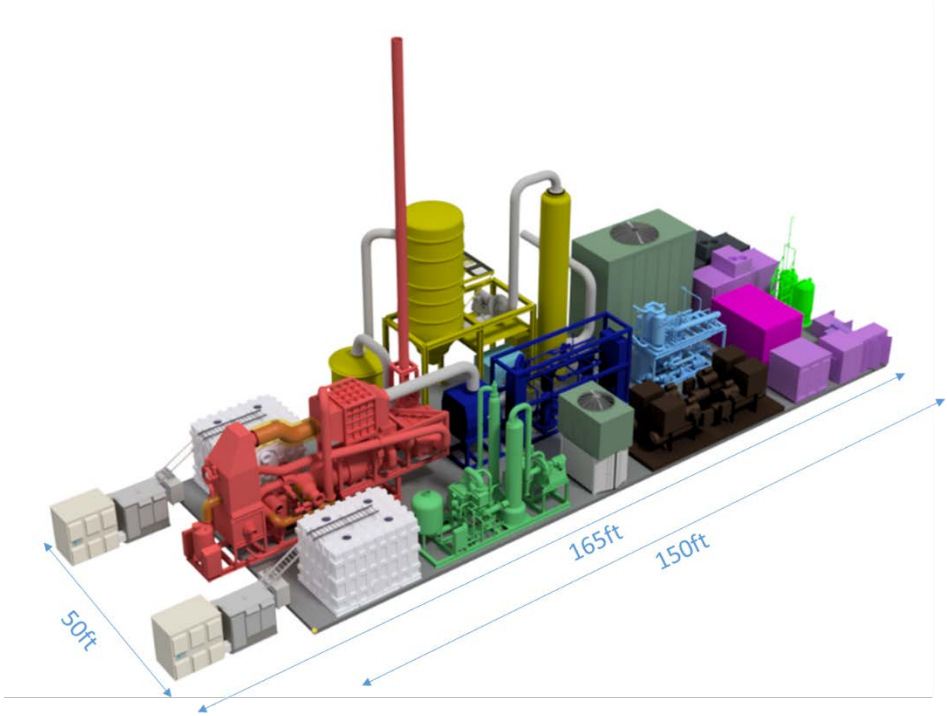

Figure 2-34. Overall plant arrangement – ISO view

After determining the footprint of the plant, the next step was to position the pieces of equipment which need vehicle access for maintenance or special consideration for installation or removal. Each fuel cell module weighs just over 100,000 pounds and typically requires the crane which installs it to have the boom fully retracted to deal with the weight. This fact drives a requirement for the fuel cells to be positioned at the edge of the plant. Access to desulfurizer vessels to change out used media and nitrogen tank for regular refills were also considerations. Placement of the flue gas cleanup train needed to be at the edge of the plant to easily tie to the feed from the Barry Generation facility.

Next, the largest vendor items needed to be considered. The vendor supplied equipment is primarily chosen based on performance with footprint being a secondary consideration. Because the footprint of many commercially-available items cannot be altered significantly, room had to be made for the large vendor supplied items such as the compressor, absorption chiller, mechanical chiller and hybrid cooling tower. All vendor supplied items were specified by FCE based on the required process conditions and pipe sizes. Standard interface locations were then communicated by vendor based on their typical design. Where possible, the general arrangement was adjusted to accommodate the standard vendor configuration in an effort to reduce cost and process risk by limiting customization. Where not possible, FCE specified interface locations for the vendor equipment. As the vendor footprints became known, the GA was adjusted to fit not only the equipment but also to allow adequate access to all components for maintenance, inspection and service.

With the modules placed and the vendor equipment footprints and interface locations known, the area available for the custom skids began to take shape. The remaining area for the custom

process skids was not sufficient to fit the required equipment while keeping the skid sizes within easily shippable size constraints. The solution was to build the custom skids taller. The increase in height was only acceptable if the skids could still be remotely manufactured and shipped to the site for assembly, so the modular (stackable) skid design was born.

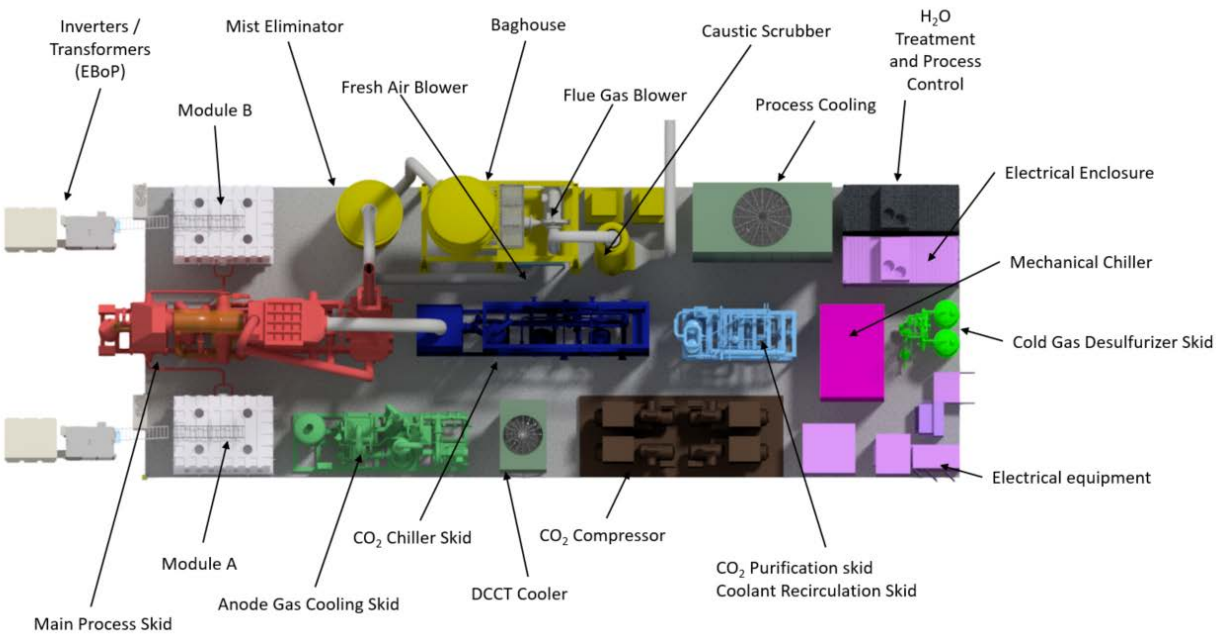

Figure 2-35. Overall plant arrangement – plan view with key equipment labeled

2.3.3 Custom Process Modules

Where possible, the engineering team relied on existing designs and hardware from FCE's commercial products. The unique process of capturing CO_2 from flue gas, however, has created requirements for new equipment to be both purchased and designed. Table 2-32 shows a list of all of the skids which comprise the SureSource Capture plant with notes on whether the design is new, carry-over, or vendor supplied.

Table 2-32. List of Process Skids

Skid #	Skid Name	Size	New/Carryover
A	Fuel Cell Module	17 FT x 13 FT x 13 FT	FCE Carryover (SS4000)
B	Fuel Cell Module	17 FT x 13 FT x 13 FT	FCE Carryover (SS4000)
1	Water Handling and Control Skid	20 FT x 8 FT x 8.5 FT	FCE New Design
2	Main Process Skid	38 FT x 8.5 FT x 20.5 FT	FCE New Design
3	Cold Gas Desulfurizer Skid	20 FT x 20 FT x 25.5 FT	FCE Carryover (SS4000)
4	Anode Gas Cooling Skid	30 FT x 10 FT x 28 FT	FCE New Design
5	CO_2 Purification Skid	20 FT x 8.5 FT x 10 FT	FCE New Design
6	Anode Gas Compressor	30 FT x 14 FT x 9.5 FT	Vendor Custom Design
7	CO_2 Chiller Skid	40 FT x 8.5 FT x 17 FT	Vendor Custom Design
8	Coolant Pumping Skid	12.5 FT x 8 FT x 5 FT	FCE New Design
9	DCCT Water Cooler	12 FT x 8 FT x 14 FT	Vendor COTS
10	Process Cooling Skid	12 FT x 24 FT x 21.5 FT	Vendor COTS
11	Nitrogen Dewar	4.5 FT x 4.5 FT x 7 FT	Vendor COTS
12	EBOP		FCE Carryover (SS4000)
13	Mechanical Chiller	12.5 FT x 8 FT x 6.5 FT	Vendor Custom Design
14	Electrical Container 1		Vendor
15	Electrical Container 2		Vendor
16	Electrical Container 3		Vendor
17	Backup Generator		Vendor COTS
20	Caustic Scrubber	9 FT x 16 FT x 42 FT	Vendor Custom Design
21	Bag House	13 FT x 27 FT x 48.5 FT	Vendor Custom Design
22	Candle Filter	11 FT x 11 FT x 16 FT	Vendor Custom Design

Table 2-32 also shows that of the 22 skids that make up the SureSource Capture plant, five are new FCE in-house design efforts. A summary of the mechanical design characteristics of each new FCE-designed skid is provided in the following sections.

Water Treatment Skid (Skid 1)

The Water Treatment System (Skid 1) is one of the systems that will be adapting knowledge, designs and hardware from FCE's existing commercial products. The structure of Skid 1 will reuse a modified shipping container with an air conditioning and heating unit that has been previously designed for the SureSource 3000. The product water tank will be housed inside the container along with a waste water tank, water filtration and de-ionization beds and associated distribution pumps and piping. The main reason for using the enclosure is to provide freeze protection to as

much of the water treatment system as possible. The water treatment unit downstream of the product water tank will be provided by a vendor from their commercially available products.

Main Process Skid (Skid 2)

Skid 2 is the largest skid in the SureSource Capture system. It houses four of the largest heat exchangers, the burner/oxidizer and the fuel preconverter along with all of its own power distribution and I/O collection. The primary function of skid 2 is to heat the incoming air, flue gas, and fuel to module temperatures using recovered heat from the module exhaust. High cathode flow rates through the ECM module and a requirement of low pressure drop through the system dictated a plant design with large diameter piping. Large diameter insulated piping is expensive, so in order to reduce cost and heat loss, Skid 2 was designed to position the heat exchangers such that the hottest pipe runs were also the shortest. Due to the footprint constraints discussed above and the need for the shortest possible piping runs, the best available option was to build vertically.

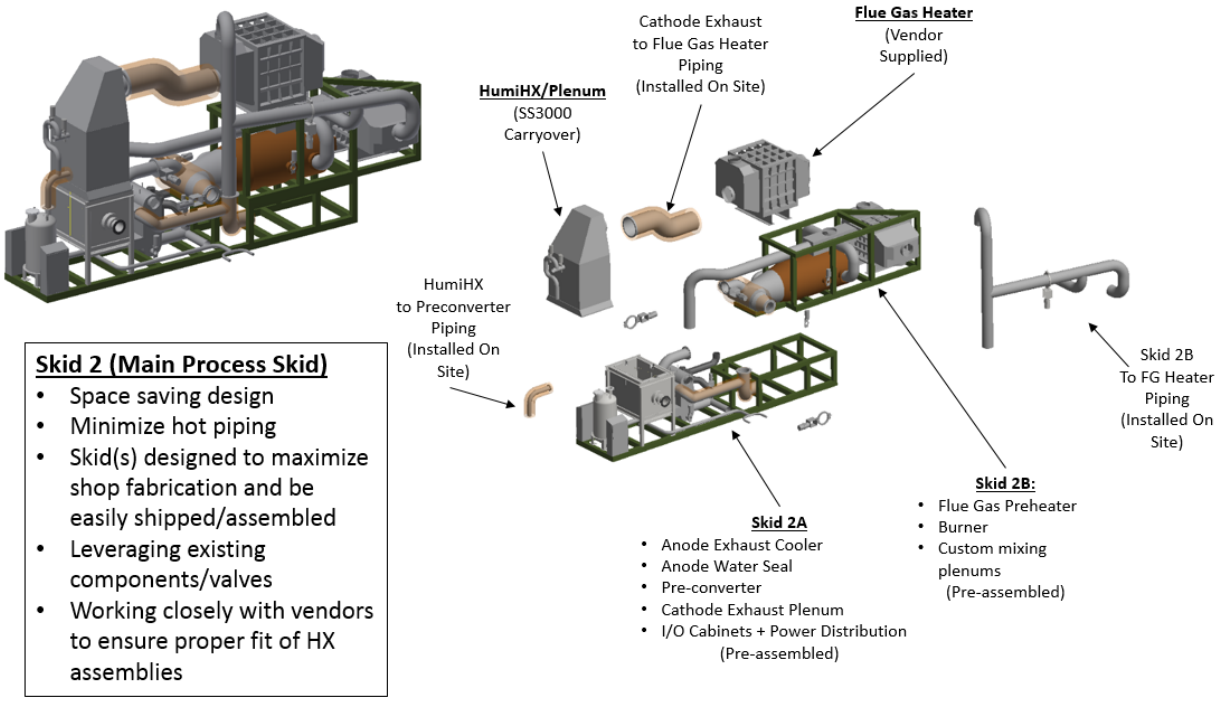

Figure 2-36. Skid 2 Modular Design

Although this approach solved the problems of footprint and pipe length, it created a challenge with regards to shipping and installation. In order to satisfy shipping size requirements, a modular design was developed for the largest skids. As shown in Figure 2-36, Skid 2 is designed to be fabricated as several smaller skids and will be assembled on site into the final configuration.

Anode Gas Cooling Skid (Skid 4):

The anode gas cooling skid, as its name suggests, is a modular skid that contains the anode gas cooling system which was described in Section 2.2.9. Skid 4 is an FCE-designed custom process module. The skid is 10' W x 29' L x 11'6" H and contains the following components:

1. Low Temperature Shift Converter
2. Saturator Super Heater
3. Saturator Water Heater
4. Electric Water Heater
5. Saturator
6. DCCT
7. Anode Exhaust Blower
8. Compressor Pre-Cooler
9. Compressor Pre-Separator
10. Natural Gas Valve Train
11. Nitrogen Distribution Piping
12. DCCT Pump
13. Saturator Pump
14. System Control Valves

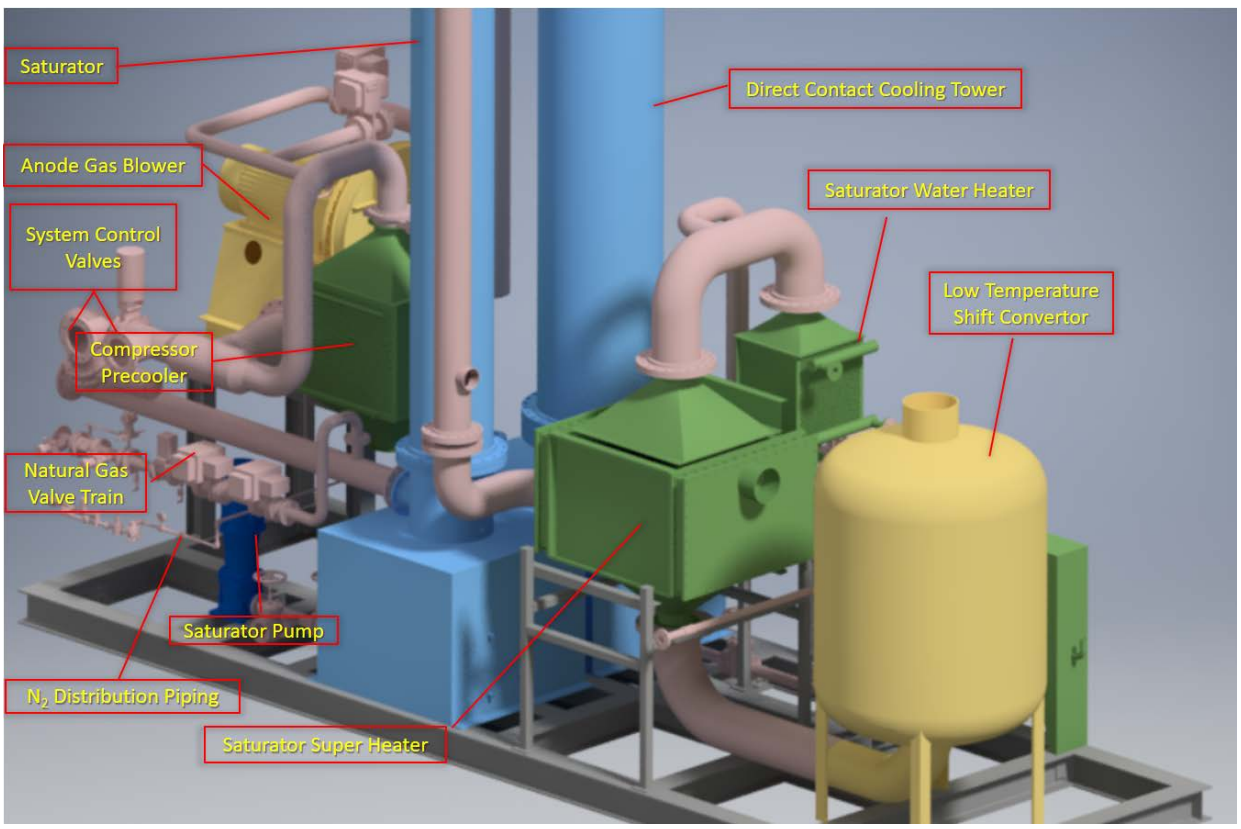

Figure 2-37. Anode Gas Cooling Skid Overview

The location of the components and piping on the Anode Gas Cooling Skid (Skid #4) is shown in Figure 2-37. As the Saturator and DCCT are tall vessels, the tower sections of the vessels will be disassembled from the skid for shipping purposes and transported separately. All of the equipment on Skid 4 has been laid out to allow for low pressure drop through piping as well as in consideration of the maximum shipping height of 11'6". Special consideration has also been given to incorporate sloping lines to low-point drains for piping that will contain moisture during operation. Pockets within the piping layout have been avoided in accordance with the P&IDs.

The initial 3-D CAD model obtained from the final selected vendor for the Saturator Super Heater was incorporated into the Skid 4 layout and it was discovered that since the piping takes a 90° turn at both the inlet and outlet, it would not fit within the 11'6" height restriction (due to the overall height of the Saturator Super Heater from the hot size inlet nozzle face to the outlet nozzle face). This concern was shared with the vendor, who subsequently redesigned the heat exchanger to increase its width and length slightly and lower the corresponding height. The second design iteration of the Saturator Super Heater provided by the vendor allowed the Skid 4 design to stay within the shipping height restrictions.

Similar design iterations were conducted on the Saturator and DCCT towers. The towers were initially at a uniform diameter at the sump, mid-section, and upper locations. However, it was determined that it would be possible to incorporate a considerably larger sump for both towers if the diameter was increased for the sump while keeping the diameters for the mid-section and upper locations at the smaller size required by the packing vendor based on hydraulic loading calculations performed for design and operating cases in pilot plant operation. This change provided three key advantages: the ability to increase the sump volume, and consequently residence time of process water in the sump to improve controllability; the ability to lower the overall height of the Saturator and DCCT towers; the increase in structural stability of the towers due to a lower center of gravity and a wider base.

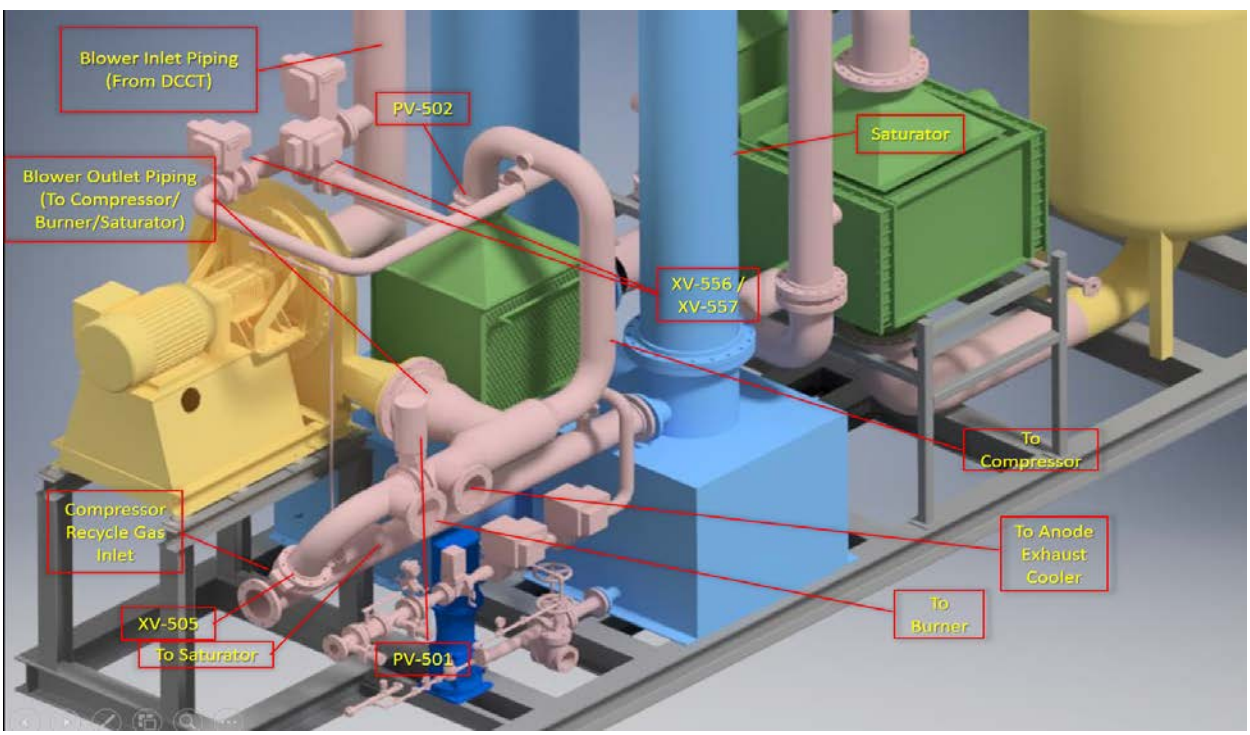

Figure 2-38. Anode Exhaust Blower Arrangement

Design iterations were also conducted for the arrangement of the Anode Exhaust Blower. It was decided to increase the installed height of the blower, to allow for drainage of any condensate present at the blower inlet directly back to the DCCT sump. Figure 2-38 shows an isometric view of the Anode Exhaust Blower arrangement in the FCE 3-D CAD model.

CO_2 Purification (Skid 5)

Skid 5 consists of separation vessels and heat exchangers which work in unison to achieve the liquefaction and separation of compressed CO_2 from anode exhaust gas available at the compressor outlet. This skid is relatively small compared to the other custom skid designs, partially due to the fact that the extreme cold temperatures and high pressure of the fluids do not require the large diameter piping seen surrounding the modules. The small size is also due to the fact that, once compressed and cooled, it is a relatively simple process to separate the liquid CO_2 from the gaseous hydrogen using a separator. Two heat exchangers are also included on Skid 5 to control the inlet temperature to the absorption chiller. These heat exchangers are a simple shell and tube design.

Coolant Pumping (Skid 8)

Skid 8 (Figure 2-39) was created to house and distribute the considerable volume of coolant the carbon capture system requires. The skid will also house the two large recirculation pumps and distribution piping and valves associated with the coolant system. In order to reduce development time and cost, the skid will be constructed within a standard ISO frame container. This saves time with designing the skid and also has the added benefit of easy transportability and stack-ability. With space at a premium within the plant, being able to put a second skid above Skid 8 helps free up much needed room for other equipment. Skid 5 (CO_2 Purification Skid) will be placed on top of Skid 8.

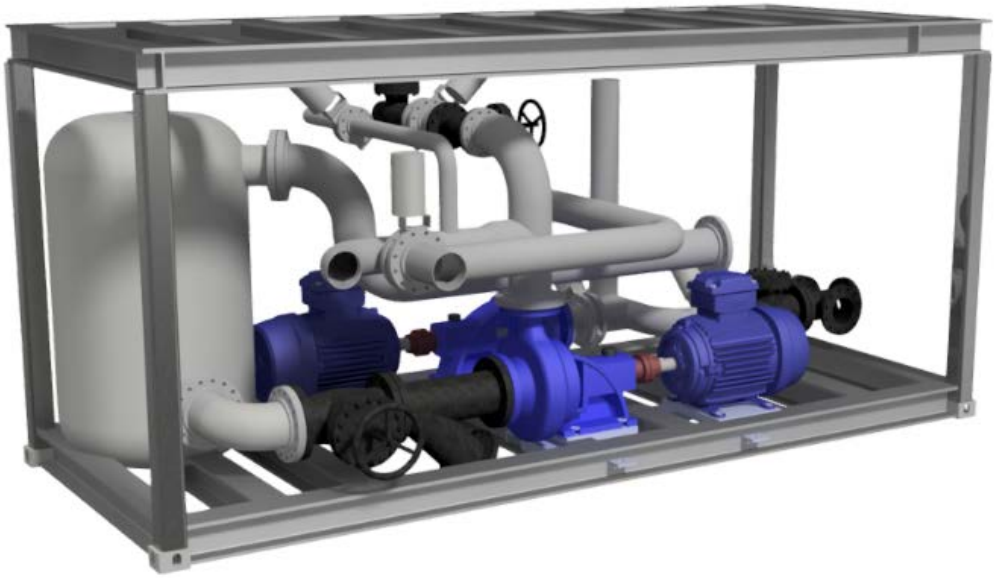

Figure 2-39. Skid 8 – Coolant Pumping Skid

2.4 Electrical Engineering

2.4.1 Introduction

FCE's SureSource 3000 power plant was selected as the baseline topology to complete the detailed electrical design for the SureSource Capture Pilot Plant. Figure 2-40 shows the SureSource 3000 plant's main electrical components and configuration before any alterations were made for use in the Pilot Plant.

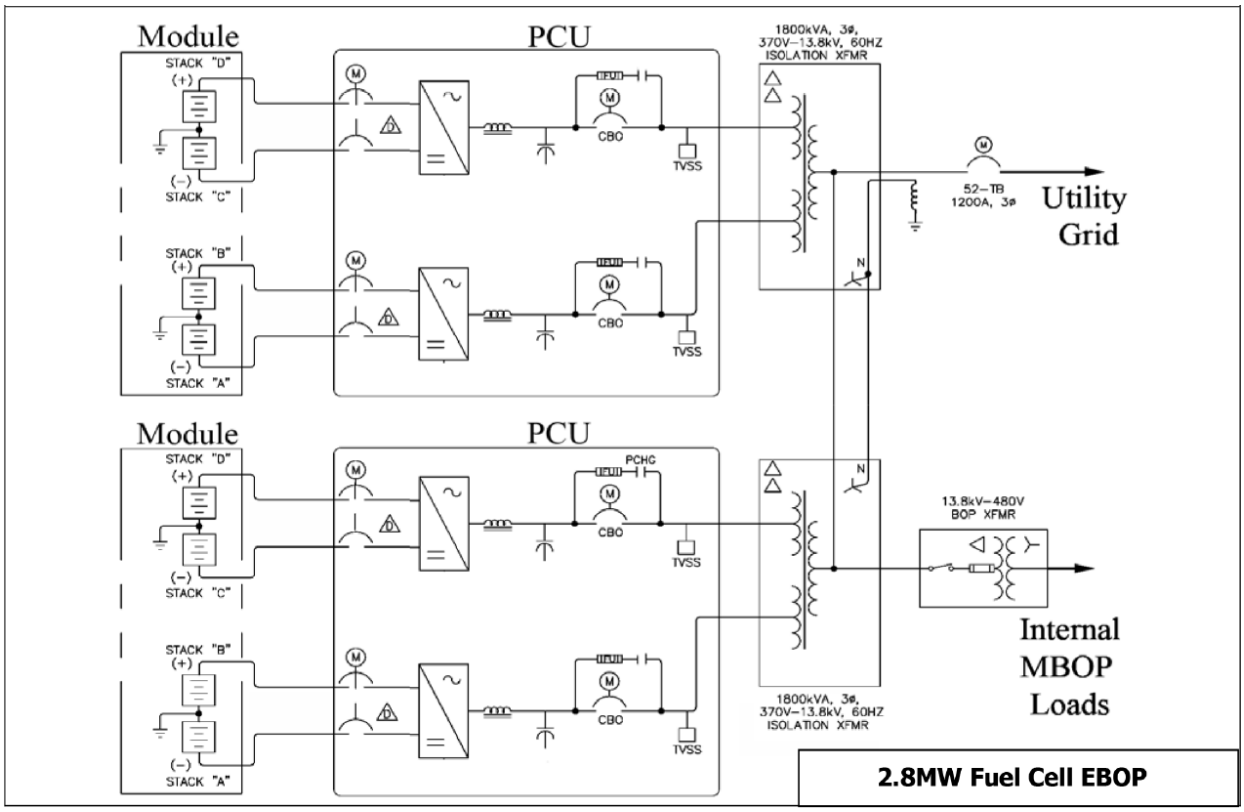

Figure 2-40. FCE SureSource 3000 Electrical One-Line Diagram

The detailed electrical design methodology for the Pilot Plant is to utilize as many of the existing main electrical components from the SureSource 3000 as possible. These components are already designed, fabricated, tested, qualified and validated as IEEE1547 & UL1741 compliant commercial products. The existing design package for the SureSource 3000 includes one-line and three-line drawings, electrical equipment diagrams, structural arrangement details, mechanical assembly details, equipment mounting details, enclosure fabrication and population details and bills of materials. This was utilized as the baseline to develop a detailed design package for the Pilot Plant. The Pilot Plant's main electrical components consist of plant power generation, transmission, utility connections, power distribution and electric fault protection equipment. Figure 2-41 shows the Pilot Plant's main electrical configuration.

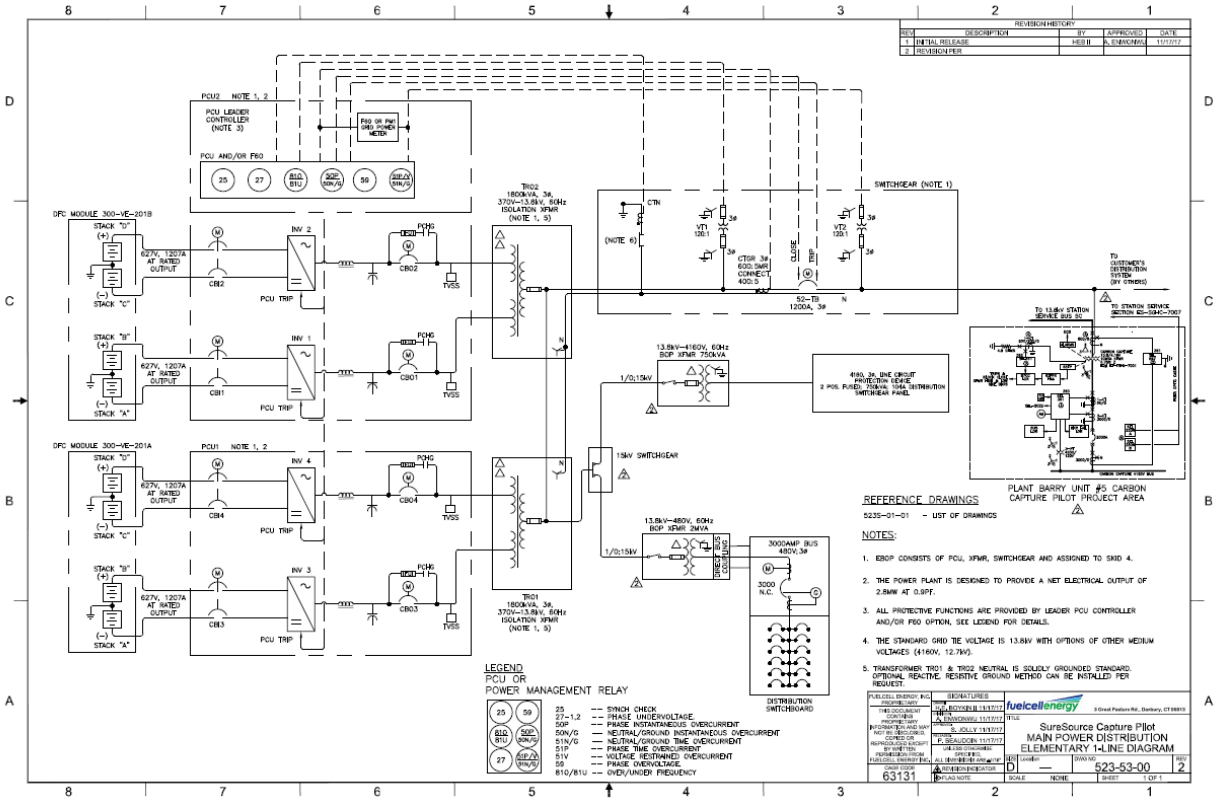

Figure 2-41. Pilot Plant Main Power Distribution One-Line Diagram

2.4.2 Electrical Configuration

Modifications (to the SureSource 3000 configuration) for the Pilot Plant included adding a 4160V transformer along with its distributive switchgear with cables/conduits to route power to where 4160V is needed within the plant. Additionally, the existing 300kVA, 480V transformer was uprated to a 2MW, 480V transformer to handle the increased load demand for the Pilot Plant's process control and mechanical and electrical balance of plant systems requiring 480V power supply. The main feeder (13.8kV) cabling/conduit was also re-routed for the new site location based on the Point of Common Coupling (PCC)/Point of Interconnection (POI) utility connection points, which differ slightly from the scheme utilized for the SureSource 3000. Table 2-33 provides the Pilot Plant's normal operating power parameters.

Table 2-33. Pilot Plant Normal Operating Power Parameters

Parameter	Specification
Output Nominal Voltage	3-Phase 13.8 kV AC
Power Conversion Capacity	2800 kW, 3100 kVA Net
Frequency	60 Hz (50 Hz optional)
Output Current Harmonics	< 5% THD
Power factor, max leading	+ 0.9
Power factor, max lagging	- 0.9
Connection Configuration	Grounded Wye
Power Quality	Complies with IEEE 519
Current Applicable Codes & Certifications	UL-1741, CA Rule 21, NEC, IEEE-1547

The Pilot Plant's electrical configuration is broken down into the following sections:

- Power Generation
- Power Conversion
- Net AC Feeder Transmission Line
- Power Distribution
- Import/Export Grid-Tie Switchgears

Power Generation

The power generation system utilizes two direct current (DC) sources (2 fuel cell modules), where each module has two center-grounded fuel cell stack-pairs. This results in a total of four unique DC sources that each operate continuously at approximately 620VDC and 1200A.

Power Conversion

The power conversion system contains the power conversion unit (PCU) equipment including, but not limited to, DC cables, DC circuit disconnects, DC-AC Inverters, NEMA 3R enclosure, PCU-chillers, AC cables and AC circuit disconnects. The PCU has two power conversion paths, two DC inputs feeds and two inverters that output 370VAC each, which are fed to two low voltage delta windings on the 13.8kV isolation output transformers. Figure 2-42 shows the electrical configuration of the pilot plant PCU equipment.

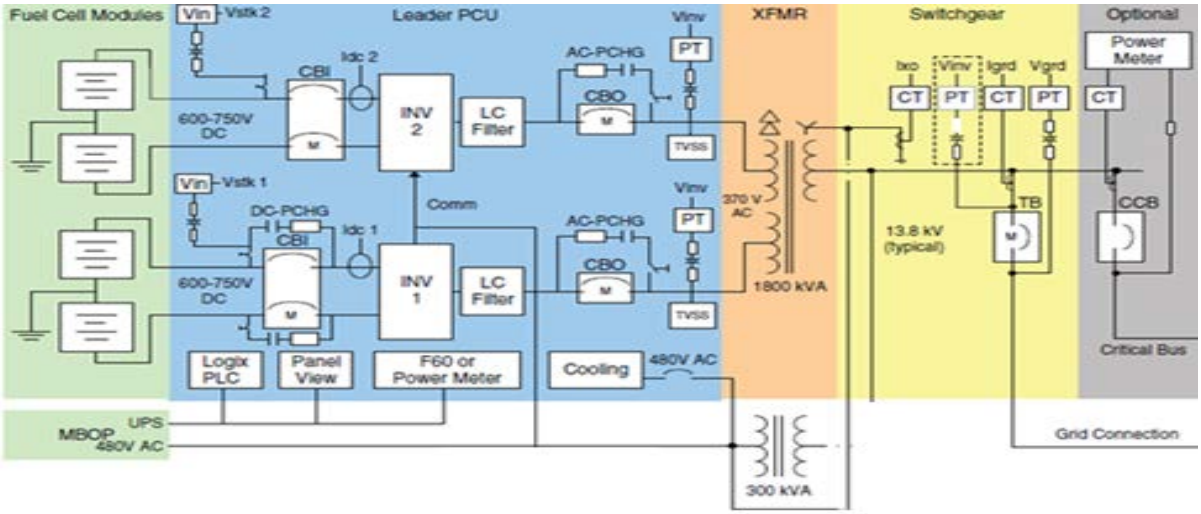

Figure 2-42. Pilot Plant PCU Electrical Configuration

Net AC Feeder

The Pilot Plant's alternating current (AC) power output feeder transmission line configuration transmits compatible AC power to the Plant Barry Station Service bus. The AC output feeder transmission utilizes equipment, such as the 370V to 13.8kV transformer, to convert the net AC output of 370V from the PCU to a voltage form of 13.8kV, which is a compatible power form to the utility/customer site. It is also compatible with the 13.8kV to 4160V and 13.8kV to 480V transformers which supply balance of plant power. Figure 2-43 illustrates the 13.8kV feeder distribution configuration and Figure 2-44 illustrates the wiring configuration for the 4160V and 480V load distribution transformers and switchgears for the Pilot Plant.

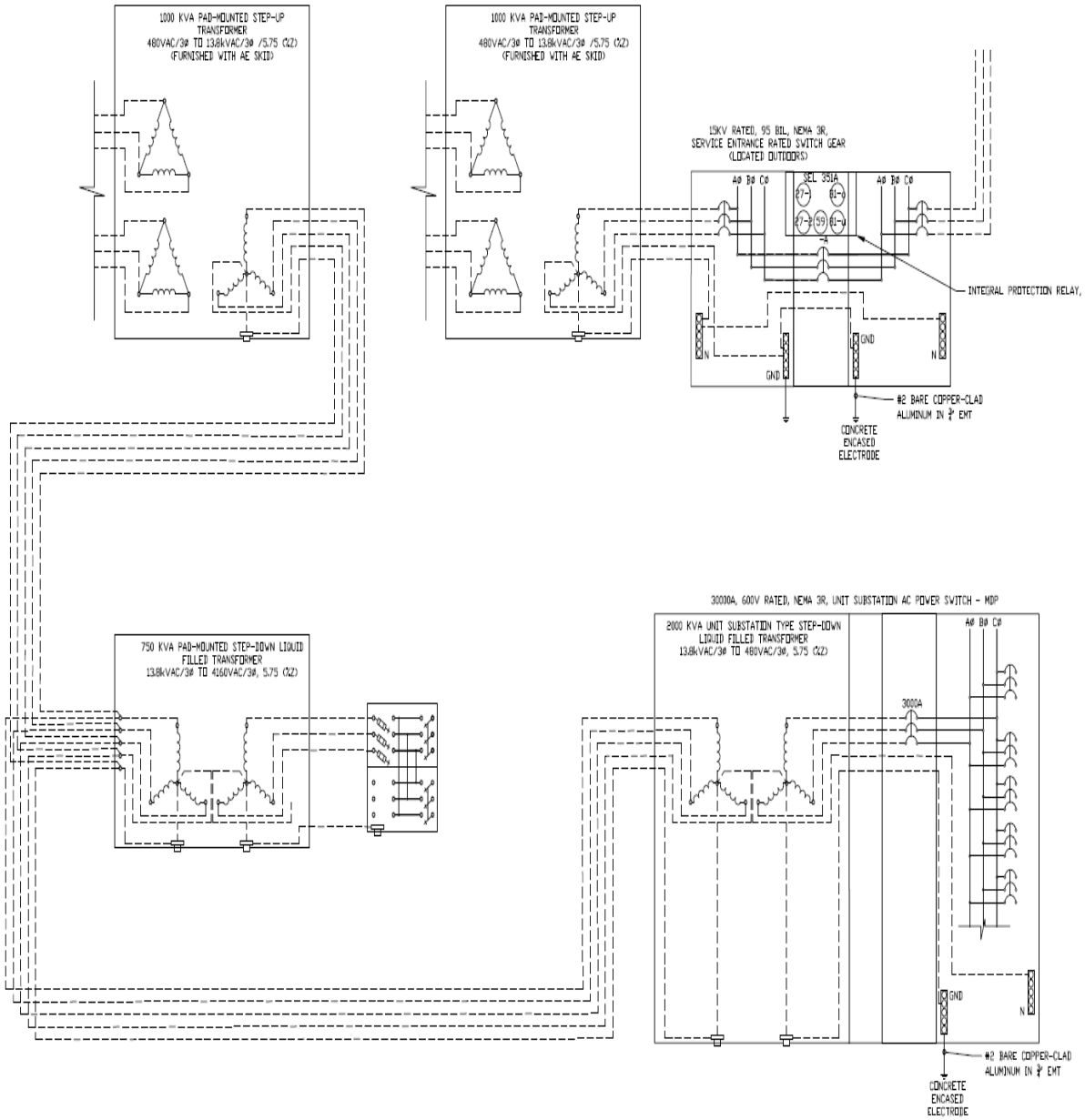

Figure 2-43. Pilot Plant 13.8kV to 4160V and 480V Feeder Distribution Configuration

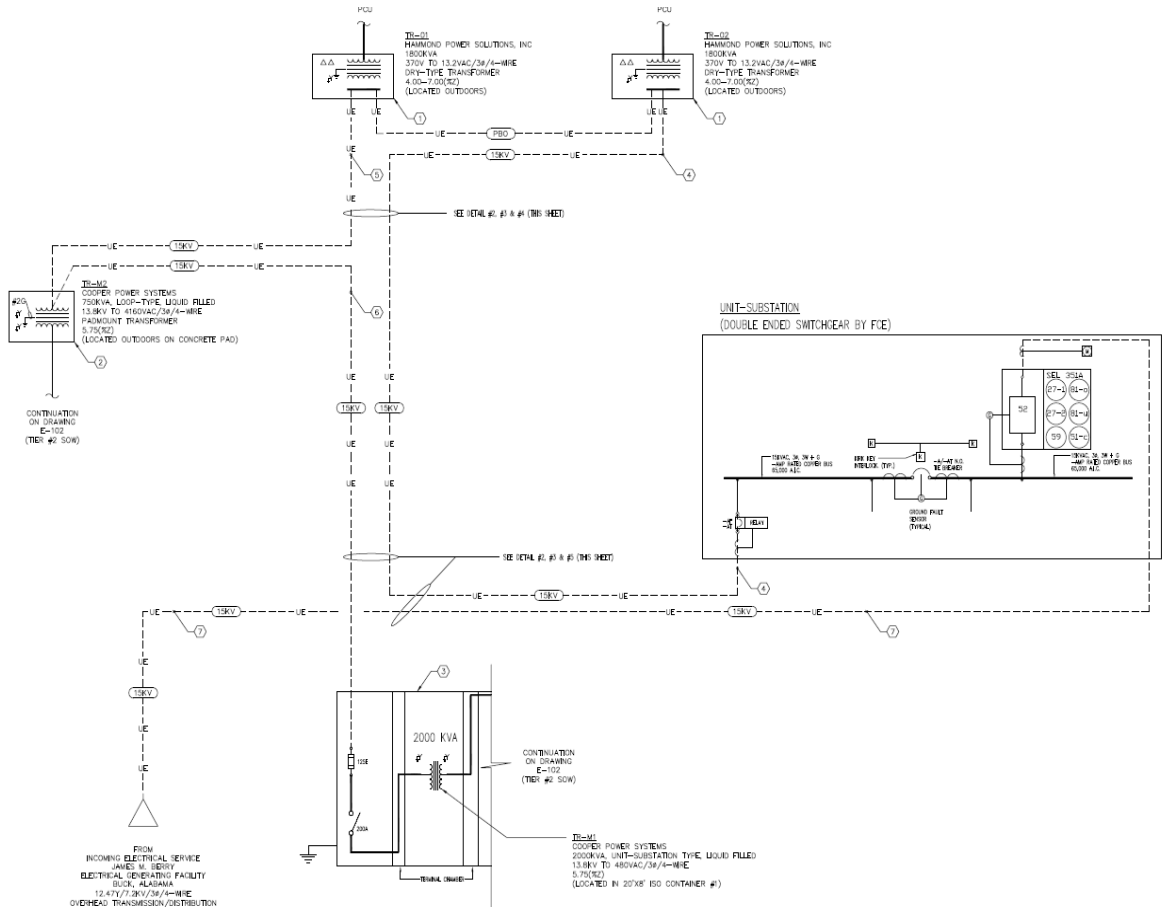

Figure 2-44. Wiring Configuration for 4160V, 480V Load Distribution Transformers and Switchgears

Power Distribution

The power distribution system distributes electric power to all energized equipment, control hardware, and other power plant components. The system is comprised of powering equipment, components, enclosures, containers, transformers, switchgears, cables, pull boxes, stub-up fittings, connectors, terminators, junction boxes, spacers, circuit breakers, isolation fuses, SCRs, VFDs, VFIs, power quality filters, voltage sensors, current sensors, power relays and power control switches. Figure 2-45 provides a detailed illustration of the power distribution topology. The system utilizes two (1800kVA, 3ph, 60Hz) 370V to 13.8kV utility connection isolation transformers to source the (2.8MW, 3ph, 60Hz) 13.8kV net AC output transmission feeder line. The feeder line powers the (750kVA, 3ph, 60Hz) 4160V transformer with a 15kV switchgear to distribute 4160V to BoP loads as required. It also powers the (2MW, 3ph, 60Hz) 480V transformer with a 3000A feeder bus switchboard to distribute 480V to BoP loads as required, as well as to stepdown transformers and power supplies to provide single phase 120VAC and 24VDC as needed for process control.

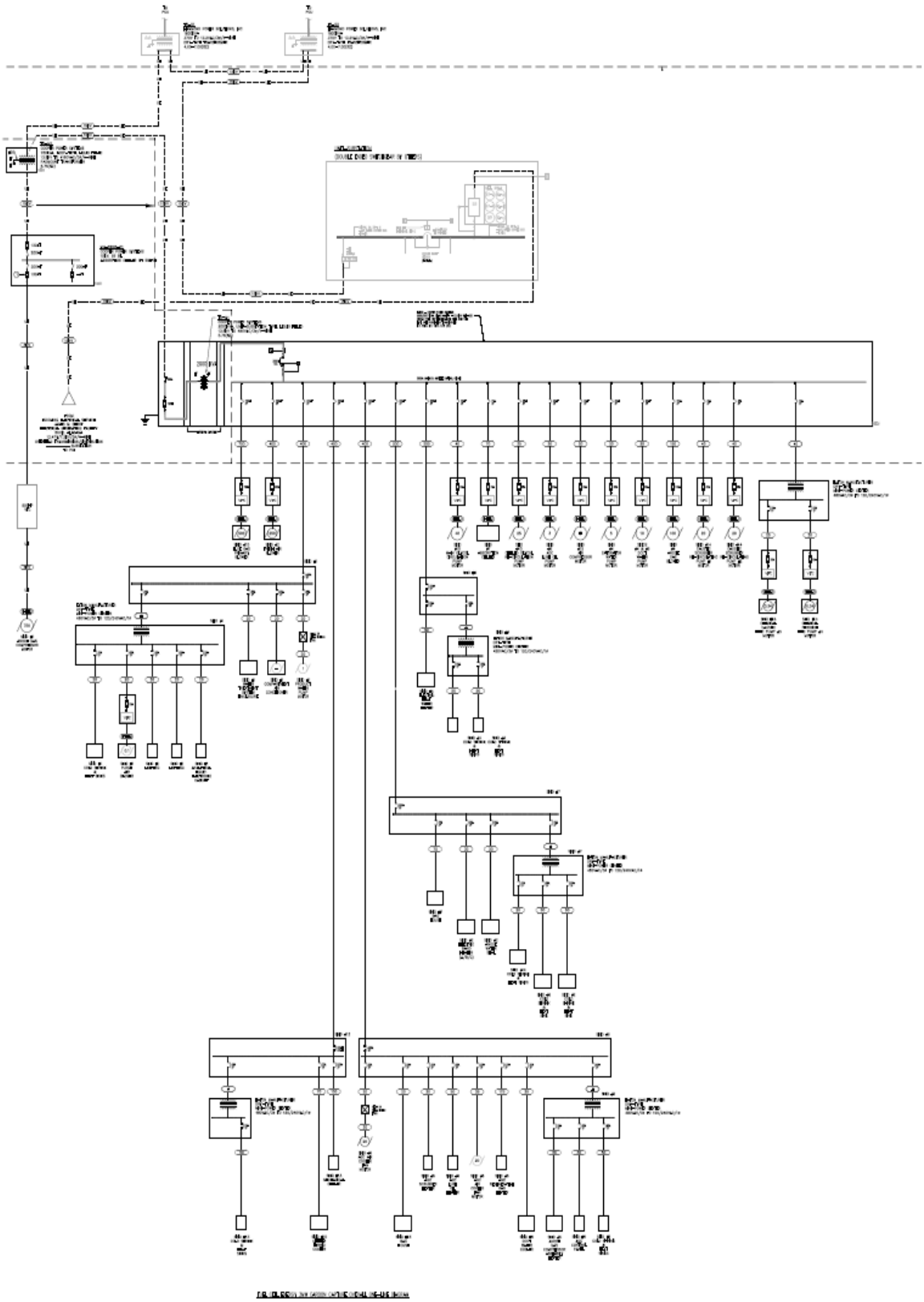

Figure 2-45. Pilot Plant Power Distribution Topology

Import/Export Grid-Tie

The Pilot Plant's import/export switchgear is utilized to interface to the customer behind the meter bus PCC or utility grid network POI. Figure 2-46 provides a detailed illustration of the power electronic protective relay scheme at the site connections. Table 2-34 shows the relay protection features and capabilities to sense, isolate and prevent electric fault disturbances while the plant is operating.

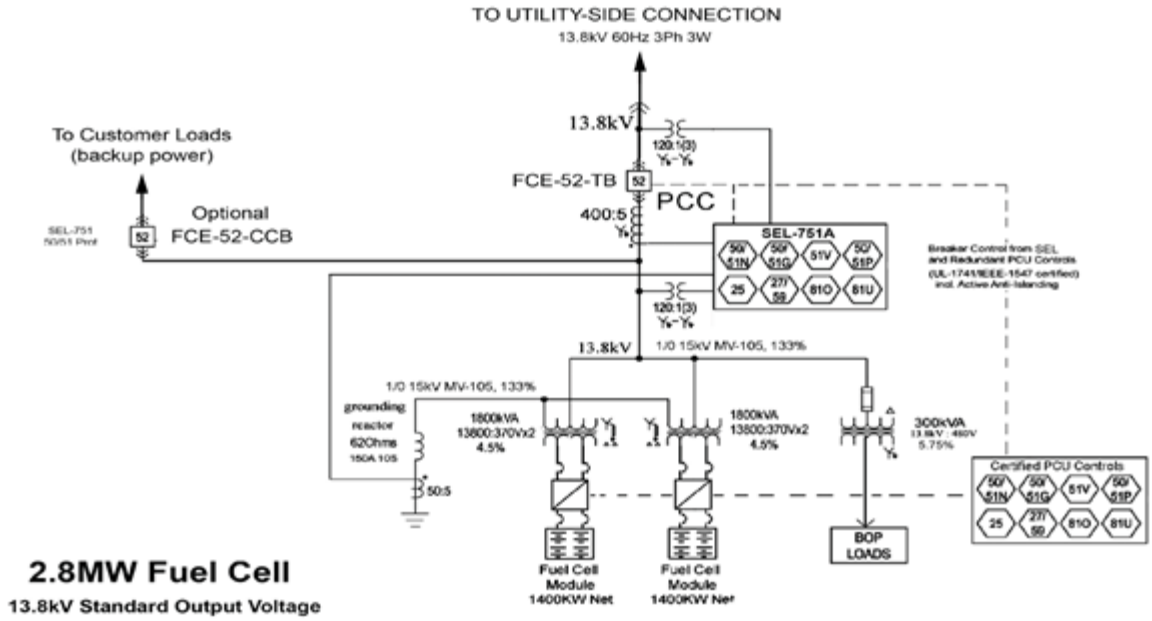

Figure 2-46. Power Electronics Protective Relay Scheme to Utility Connections

The detailed design for the Pilot Plant's import/export electric plant switchgear consists of two 1800kVA isolation transformers fed by the PCU. They are paralleled on their high (13.8kV - wye) side and feed a common main breaker, which is managed by a feeder management relay and the internal PCU grid protection controls. The system is certified to UL-1741 and IEEE-1547. The PCU utilizes the internal PCU grid protection as the primary protective relay and SEL751A as the secondary protective relay device to fulfil the functions outlined in Table 2-34.

Table 2-34. Protective Relay Functions

ANSI Standard Device Number	Description
25	Sync Check
27	Under Voltage
59	Over Voltage
50	Instantaneous Overcurrent (Line)
50 N/G	Instantaneous Overcurrent (Neutral ground)
51V	AC timed Overcurrent (Line)
51 N/G	AC timed Overcurrent (Neutral ground)
81 O/U	Over/Under Frequency

2.4.3 Area Classification Analysis

The presence of hydrogen, carbon monoxide, ammonia and natural gas within the various sub-processes creates hazardous areas as defined by NFPA 70, NEC 500 - 506 within the SureSource Capture Pilot Plant. There are two applicable classifications for the sub-processes per NFPA: Class 1 Division 1 and Class 1 Division 2. The Group ratings vary from B through D depending upon the specific gas present within the equipment.

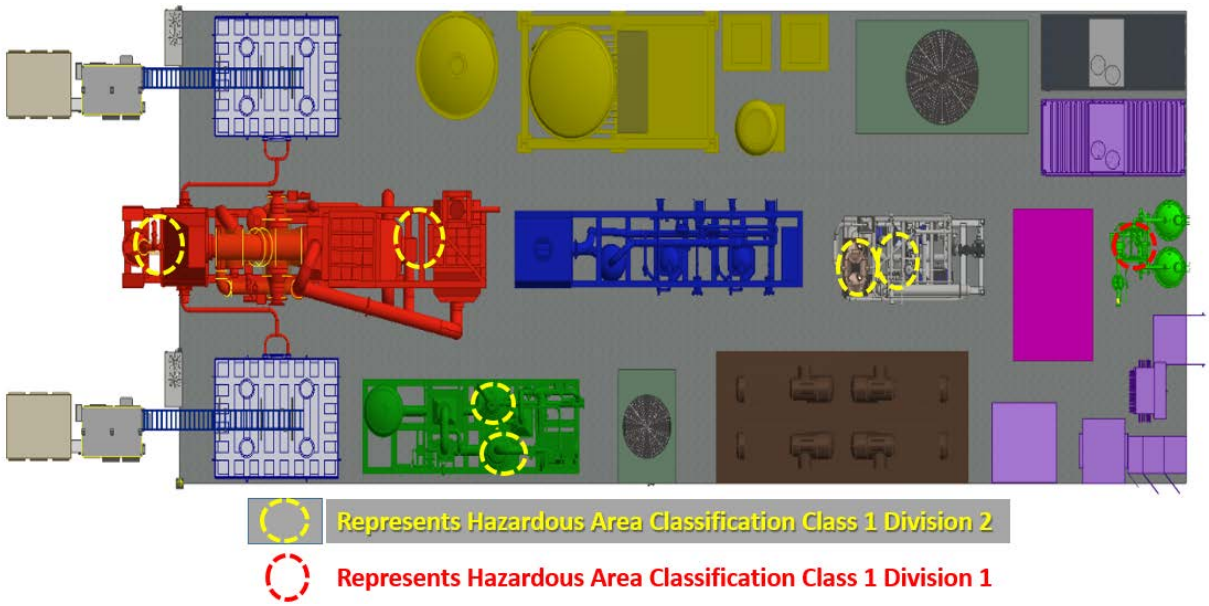

Figure 2-47. Hazardous Area Classification Boundaries

The hazardous area classification boundaries for the various sub-processes within the Pilot plant have been established and are shown in Figure 2-47. All equipment and instrumentation are designed, built and rated for service within the classified areas in which they are located. All other areas of the Pilot Plant are considered unclassified and the respective equipment and instrumentation are rated for service in general-purpose areas. Though located in non-hazardous areas, the equipment and instrumentation are designed and configured with protection for personnel safety and for service in an outdoor environment. The Hazardous Area Classifications are summarized in Table 2-35 below, and shown in Figure 2-47.

Table 2-35. Hazardous Area Classifications

Skid	Equipment	Hazardous Area Classification
2	Preconverter	Class 1 Division 2 Group B, D
2	Burner Fuel Train	Class 1 Division 2 Group B, D
3	Desulfurizer Beds	Class 1 Division 1, Group D
5	CO_2 Separator Relief	Class 1 Division 2, Group B
4	Saturator and DCCT Relief Vents	Class 1 Division 2, Group B, D
8	Regenerative Gas Dryer	Class 1 Division 2, Group B

2.4.4 Plant Control Hardware Summary

The programmable logic controller (PLC) selected to operate the Pilot Plant is manufactured by General Electric (GE), based on FCE's experience with similar hardware in the Sure Source products. Plant controls are implemented in a PLC architecture and designed to provide simplified operation and unattended operation capability. A Human Machine Interface (HMI) is used for remote data monitoring and operator actions via a field connected computer. A protection scheme is implemented to generate alarms as required and will cause the plant to trip to a failsafe state, if necessary.

The GE-PLC microprocessor based controller consists of a PLC CPU, backplane chassis and power supply, input/output cards and industrial communication protocol cards (Profinet, Ethernet-IP and Modbus TCP/IP).

The GE-PLC centralized I/O data processing is fully capable of sending and receiving data for process control to and from every Pilot Plant skid with process control instrumentation, such as valves, blowers, thermocouples and sensors. The operator will, however, have overriding control through the HMI when seen as necessary. A hardwired Emergency Shutdown (ESD) circuit is included as a redundant level of safety. The ESD circuit will trip the plant to a failsafe state based on several conditions, including: an ESD button press, the presence of hazardous gases or conditions as measured by various sensors, on command of the PLC, on command from Plant Barry's DCS, or upon independent detection of a "frozen" or non-responsive PLC.

2.5 Engineering for Tie-Ins to Plant Barry

2.5.1 Introduction

AECOM has been leading the engineering effort on behalf of FCE to connect the SureSource Capture Pilot Plant to the Plant Barry main plant. AECOM followed corporate best practices for engineering, specifications, and review and approval processes before any deliverable was issued to FCE or Plant Barry. AECOM employs a multi-tiered checking process. After the originating discipline lead develops a deliverable (i.e., drawing, P&ID), a detailed check of that package is conducted by an engineering peer. After comments from that check are addressed, an inter-discipline review is conducted to ensure that the deliverable meets overall quality as well as project requirements. The project engineer or project manager then provides a final check on each deliverable.

FCE assembled the pilot plant tie-in requirements, as shown in Table 2-36. Interconnections are required for process streams, electrical, high speed data connection, and control communications.

Table 2-36. Interconnection Characteristics

Utility	Characteristics	Value	Units
Natural Gas Supply	Pressure	15-20	Psig
	Maximum Flow, Standalone mode	362	SCFM*
Water Supply			
Process Water Supply (Demineralized)	Pressure, min.	30	Psig
	Nominal Flow	13	gpm
	Maximum Flow	20	gpm
Water Discharge	Maximum Flow	4.17	gpm
Flue Gas	Pressure (nominal)	14.6	Psia
	Temperature (nominal)	131	°F
	Nominal Flow, 70% capture rate, 12% CO_2	50,000	lb/hr
		11,140	SCFM*
Electric Power (Start-up and Shutdown periods only)	Auxiliary Loads	450	kW
	Voltage	13,800	Volts
Electric Power (Start-up and Shutdown periods only)	Power Generation, Standalone Mode	2,800	kW
	Voltage	13,800	Volts
Communication Connection (External)	One high-speed Internet connection (≥128 kbps with static IP address)		
Communication Connection (SureSource Capture to Host)	Control permissives/status over Ethernet to host plant DCS. Hardwired Emergency Shutdown signal.		
*** Standard Conditions: 1 atm @ 60°F**			

The tie-in point locations were developed by the entire project team, including FCE, Southern Company, AECOM, and McAbee Construction. Discussions surrounding the tie-in points involved two site visits by project personnel and all tie-in points have been approved by the Plant Barry review board.

Plant Barry and FCE specifications for piping, instrumentation, and other engineering requirements took precedence over AECOM standards. AECOM standards were used wherever none existed for Plant Barry or FCE. In all cases, the specifications were deemed appropriate by AECOM engineering discipline leads and met or exceeded process design conditions and requirements.

AECOM updated existing Plant Barry P&IDs for the Plant Barry tie-in points to the FCE battery limits, including necessary valves and instrumentation. For consistency, AECOM used the drawing symbols and format adopted by the project team. Valves and instrumentation were included for process needs, as well as operational safety. The P&IDs were developed using PDF red-lines to existing Plant Barry P&IDs. Plant Barry will utilize red-lined tie-in point P&IDs to modify their plant drawings as necessary. During Pilot Plant operations, the Plant Barry drawings will include leader arrows and references to those developed by FCE for pilot plant.

The set of documents that constitute the tie-in point engineering package are shown in Table 2-37.

Table 2-37. Tie-In Point Engineering Package

DOCUMENT NAME	REV	DESCRIPTION
30-0000-D-1_16Feb2018	Prelim	Piping & Instrumentation Diagram – Flue Gas Tie-In
523S-31-02 SHT 4	4	Piping & Instrumentation Diagram – Water Treatment System
523S-31-02 SHT 5	4	Piping & Instrumentation Diagram – Fuel Gas Desulfurization
523S-31-02 SHT 9	4	Piping & Instrumentation Diagram – Caustic Scrubber
523S-31-02 SHT 30	4	P&ID Legend Of Symbology – Discharge Water Holding Tank
60509008_I-O List_Rev_A	A	Instruments And I/O List
60509008_Line List_RevA	A	Line List
60509008-Manual Valve List_RevA	A	Valve List
60509008-Tie-Points List_RevA	A	Tie-Points List
60509008-SHT-30-0000-C-0001_RevA	A	Foundation General Arrangement
60509008-SHT-30-0000-C-0002_RevA	A	Foundations – Sections And Details
DEMO_E005M20052_16Feb2018	Demo 4a	P&ID – Unit5 Startup Boiler - Natural Gas
E2.0_RevA	A	Preliminary Single Line Diagram
E2.1_RevA	A	Transformer Connection Details
E005M20052_16Feb2018	5	P&ID – Unit 5 Startup Boiler – National Gas
E005M20053_20Feb2018	1	P&ID – Unit 5 Startup Boiler – Condensate Pumps
60509008-SHT-30-0000-E-0001_RevA	A	Electrical Grounding General Arrangement
60509008-SHT-30-0000-P-0001_ReA	A	Piping General Arrangement

2.5.2 Air and Water Permitting Requirements

Air Permit: The SureSource Capture Pilot Plant will have a single point source exhaust to the air. The exhaust composition has been characterized for several operating modes based on the detailed component composition supplied by Southern Company Services (SCS) for the flue gas and FCE's process modeling of the carbon capture system. The process conditions and compositions are summarized in Table 2-38 and the exhaust stack emissions are shown in Table 2-39.

SCS has had a preliminary conversation with the Alabama Department of Environmental Management (ADEM) regarding the pilot plant project. Due to the very low emissions and the short duration of testing, ADEM is not inclined to issue an Air Permit for the project. ADEM believes any requirements and approvals can be appropriately handled via letter exchanges. FCE

has provided SCS with the process configuration and technical information needed to develop a request for a written determination from ADEM that no air permit is required for the system. The request is ready to be sent to ADEM in the follow-on project phase.

However, all regulatory matters are not under ADEM's authority. For instance, ADEM cannot approve alternate monitoring approaches. To comply with regulatory requirements for mercury monitoring, Plant Barry is required to have a Continuous Emissions Monitoring System (CEMS) on all flue gas streams. Consequently, the Pilot Plant will require a sorbent trap to be installed and integrated into the Air Pollution Control system so that the data can account for the emissions of the slipstream flue gas in conjunction with the emissions from the main flue gas exhaust.

Currently, the Unit 5 slipstream has a certified CEMS where NO_x, SO_2, CO_2 and flow are monitored. The CEMS was installed when the scrubber-based Carbon Capture and Sequestration (CCS) facility was constructed, and is labeled "5E" in the Plant Barry Monitoring Plan submitted and approved by the United States Environmental Protection Agency (EPA).

Consultation with the CEMS integrator and review of the design flows and velocities of the slipstream flue gas supplied by FCE indicates that the flow monitor could not pass certification with its current configuration. The technical solution requires a 16 feet offset between the flow probes which would supply the sufficient angle necessary for monitor accuracy and certification (the current offset is 6.5 feet). Access platforms must be installed to support modification of the flow probe locations. The modifications will be performed by SCS during the pilot plant installation phase.

Table 2-38. Plant Exhaust Conditions at Various Operating Modes

Operating Mode:		Carbon Capture Mode, 70% ISO	Carbon Capture Mode, 90% ISO	Standalone Mode - Power Generation	Carbon Capture Mode, 70% ISO	Carbon Capture Mode, 70% ISO with Liquid CO_2 Vaporization
Temperature	ºC	116.22	116.34	271.42	116.99	64.13
	ºF	241.19	241.41	520.56	242.59	147.43
Pressure	psia	15.06	15.06	15.06	15.06	15.06
	iwc	416.83	416.83	416.83	416.83	416.83
Total Mole Flow	kmol/hr	859.80	468.86	595.57	861.26	941.79
	lbmol/hr	1895.52	1033.65	1312.99	1898.73	2076.27
Total Mass Flow	kg/hr	23372.85	12553.50	16933.39	23408.04	26939.67
	lb/hr	51527.78	27675.44	37331.35	51605.36	59391.19
Total Std. V	Sm^3/hr	19271.27	0.00	13348.82	19303.90	21108.90
	scfm	11,988.47	10508.87	8,304.17	12008.92	13131.80
Total Vol. Flow	m^3/hr	26797.36	6537.54	25976.89	26896.37	25408.70
	ft^3/min	15772.35	14617.76	15289.43	15830.62	14955.01
Stack Velocity	ft/s	87.27	80.88	84.60	87.60	82.75
Ave Mol Wt	kg/kmol	27.18	26.77	28.43	27.18	28.60
Density	kg/m^3	0.87	0.86	0.65	0.87	1.06
	lb/ft^3	0.054	0.054	0.041	0.054	0.066
Cp	kJ/kmol-K	30.44	30.21	31.15	30.45	31.11
	Btu/lbmol-F	7.27	7.22	7.44	7.27	7.43
Cp/Cv		1.38	1.38	1.36	1.38	1.37
Viscosity	cP	0.02	0.02	0.03	0.02	0.02
Thermal Cond.	W/m-K	0.03	0.03	0.04	0.03	0.03
	Btu/hr-ft-F	0.018	0.018	0.024	0.018	0.015
Gas Composition						
CO	mole %	0.00001%	0.00002%	0.00001%	0.00001%	0.00309%
CO_2	mole %	3.06%	1.04%	4.46%	3.11%	11.36%
H_2O	mole %	14.98%	15.49%	8.48%	15.08%	13.79%
N_2	mole %	77.80%	80.24%	74.92%	77.74%	71.09%
O_2	mole %	4.00%	3.06%	11.27%	3.92%	3.58%
Ar	mole %	0.16%	0.18%	0.87%	0.16%	0.15%

Table 2-39. Exhaust Stack Emissions

	90% Carbon Capture Mode		Standalone Power Generation Mode	
Constituent	**lb/h**	**TPY**	**lb/h**	**TPY**
SOx (SO_2 and SO_3)	0.0061	0.027	0.0002	0.00088
CO (Normal Exhaust)	0.19	0.83	0.19	0.83
CO (due to Catch and Release of CO_2)	2.74	12.00	0	0.00
CO (Total for Catch and Release Pilot)	2.93	12.83	0.19	0.83
NO_x	0.59	2.6	0.02	0.088
Hg	0.000037	0.0002	0.0	0
PM	0.00066	0.0029	0.00011	0.00048
VOCs	0.038	0.17	0.038	0.17

Stack Height: Based on the emissions profile and stack parameters provided, it was determined that there should be no adverse ambient air quality impacts due to operation of the Pilot Plant. Therefore, on-site safety & health considerations primarily inform the stack height design. Southern Company gathered distances and elevations of areas in the vicinity of the pilot plant location where workers may access. This information was utilized to select a stack height of 60 feet, based on maintenance access on the main flue gas slipstream pipe rack at Plant Barry.

Water Permit: The SureSource Capture Pilot Plant will generate water discharge streams from five specific unit operations within the Pilot Plant boundary limits. The discharge streams are 1) blowdown from the Caustic Scrubber, 2) wash water from the Mist Eliminator, 3) blowdown from the Hybrid Cooling Tower (when operating with cooling water on a hot day), 4) water from the CO_2-rich Gas Condensate Pretreatment Unit and 5) overflow water from the Product Water Tank (zero flow by design). The system water discharge flow rate is highest for the 70% Carbon Capture Mode on a hot day and is the basis for the estimated volume and composition of the composite discharge stream.

The SureSource Capture Pilot Plant will generate discharge water at an average rate between 1.1 gpm and 4.1 gpm from sources within the system depending upon the mode of operation. A water balance summary for the process is shown in Figure 2-48.

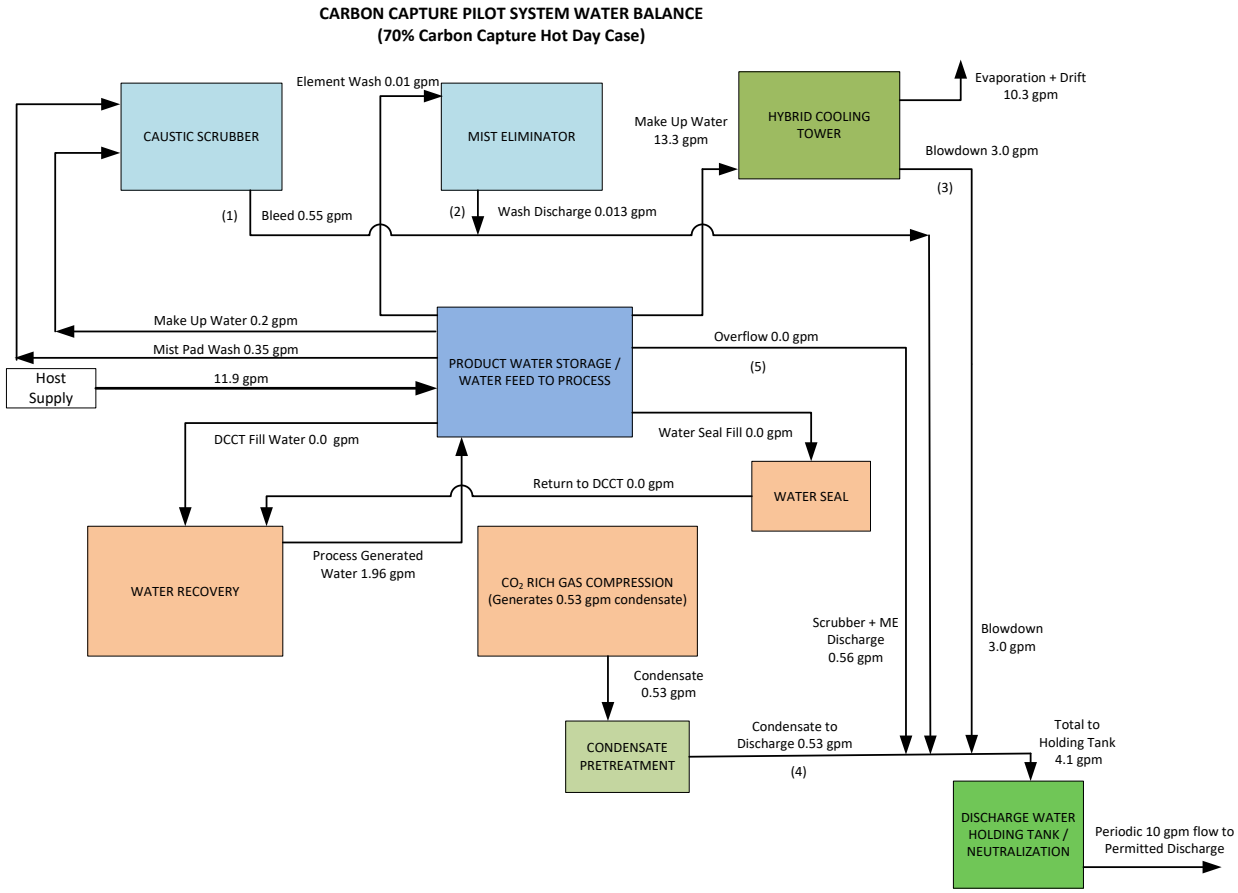

Figure 2-48. Water Balance for SureSource Capture Pilot Plant (70% Carbon Capture, 104˚F Ambient)

It was initially planned to send the discharge water from the Pilot Plant to Plant Barry's on-site Waste Water Treatment facility. However, this option was not pursued because Plant Barry cannot obtain a modification to its existing permitted system to allow for the addition of a new point source contribution to its operations.

The option for on-site accumulation and off-site disposal was researched and found to require storage in several large containers that provide an overall capacity on the order of 20,000 gallons. The water would be transferred to 5,000 gallon tankers and transported to the local Publicly Owned Treatment Works (POTW) for disposal every three to five days as on-site storage reached predetermined limits. The combined cost of storage, transport and disposal is estimated to be approximately $100,000 for two months of operations and would require additional area be provisioned to stage storage tanks and provide for truck and tanker traffic. Due to the cost and logistics, this option was not selected. As a result, it was decided to pursue a dedicated point source discharge with its own permit. The permit application has been prepared and submitted to the Alabama Department of Environmental Management (ADEM) for review and approval prior to plant installation. ADEM issued a draft permit for FCE's review; FCE requested additional language in the Permit Rationale, which was granted and updated by ADEM. The draft permit has since been referred for public comment and awaits conclusion of the public comment period.

The Cooling Water Blowdown, FGD System Water (Caustic Scrubber Blowdown and Mist Eliminator Wash Water) and Process Condensate Water will be combined in a Discharge Water Holding Tank. After neutralization with caustic addition, the water will be pumped periodically as

a single discharge stream from the pilot facility to the canal located to the southwest of the Pilot Plant. The estimated liquid discharge is summarized in Table 2-40.

Table 2-40. Liquid Discharge Summary

Source	Volume			Recommended Management Practice
	Daily	Weekly	Lifetime (2 months)	
	gal/day	gal/week	gallons	
Non-Contact Cooling Water	4,320	30,240	259,200	Aggregation and Neutralization in Discharge Water Holding Tank and batch conveyance to permitted discharge
Process Condensate Water	763	5,342	45,792	
FGD Waste Water	811	5,675	48,660	
Total	**5,894**	**41,257**	**353,652**	

2.5.3 Process Interconnections

The SureSource Capture Pilot Plant requires four distinct process tie-in points between the equipment inside the Pilot Plant boundary and the Plant Barry main plant. These tie-in points include water supply, natural gas, flue gas and discharge water. The sizing basis and material of delivery for each process connection are listed in Table 2-41.

Table 2-41. Pilot Plant Process Tie-In Points

Process Tie-Point Description	Sizing Basis	Size & Material
Water Supply	20 gpm (max)	1” 304 SS
Natural Gas	362 SCFM	3” carbon steel
Flue Gas	50,000 lb/hr	24” FRP
Discharge Water	6,000 gpd	2” HDPE

2.5.4 Electrical and Instrumentation Interconnections

Electrical Interconnection: The SureSource Capture Pilot Plant requires a 13.8kV electrical interface to the main plant. The project team identified an existing 13.8kV feeder supplying an existing transformer as the optimum source for electrical power flow into and out of the Pilot Plant. The terminations to the Pilot Plant will occur on the high side of the transformer and the existing relay protection scheme will be used. The 3/0 power conductors were sized based on electrical modeling (ETAP) of the Plant Barry electrical system. The One-Line diagram for the Pilot Plant connection to the Plant Barry 13.8 kVA tie-in point is shown in Figure 2-49.

SCS performed an electrical study of the 13.8 kVA electrical tie-in connection and found that the associated neutral connection with a lower value of the Neutral Grounding Resistor (NGR) could desensitize the main plant’s existing protection because the Pilot Plant Power Conditioning Unit would contribute some of the fault current. A higher NGR impedance will minimize the PCU fault current contribution and therefore maintain the effectiveness of the main plant’s fault protection.

With all pilot plant BOP loads being fed from the transformer (e.g. during commissioning and acceptance testing of the system), SCS did not identify adverse impacts on voltage regulation in Grid Island (GI) mode with the higher NGR impedance.

The pilot unit will have a dedicated grounding grid installed around the FCE battery limits and will be tied into the Plant Barry grounding grid in at least two separate locations. SCS's grounding standard, E-1-11, has been followed for the grounding grid to ensure personnel safety and proper integration into the existing Plant Barry grounding grid. Inside the Pilot Plant battery limits, each major process skid will have two connections to the ground grid to ensure reliable ground paths for all powered equipment.

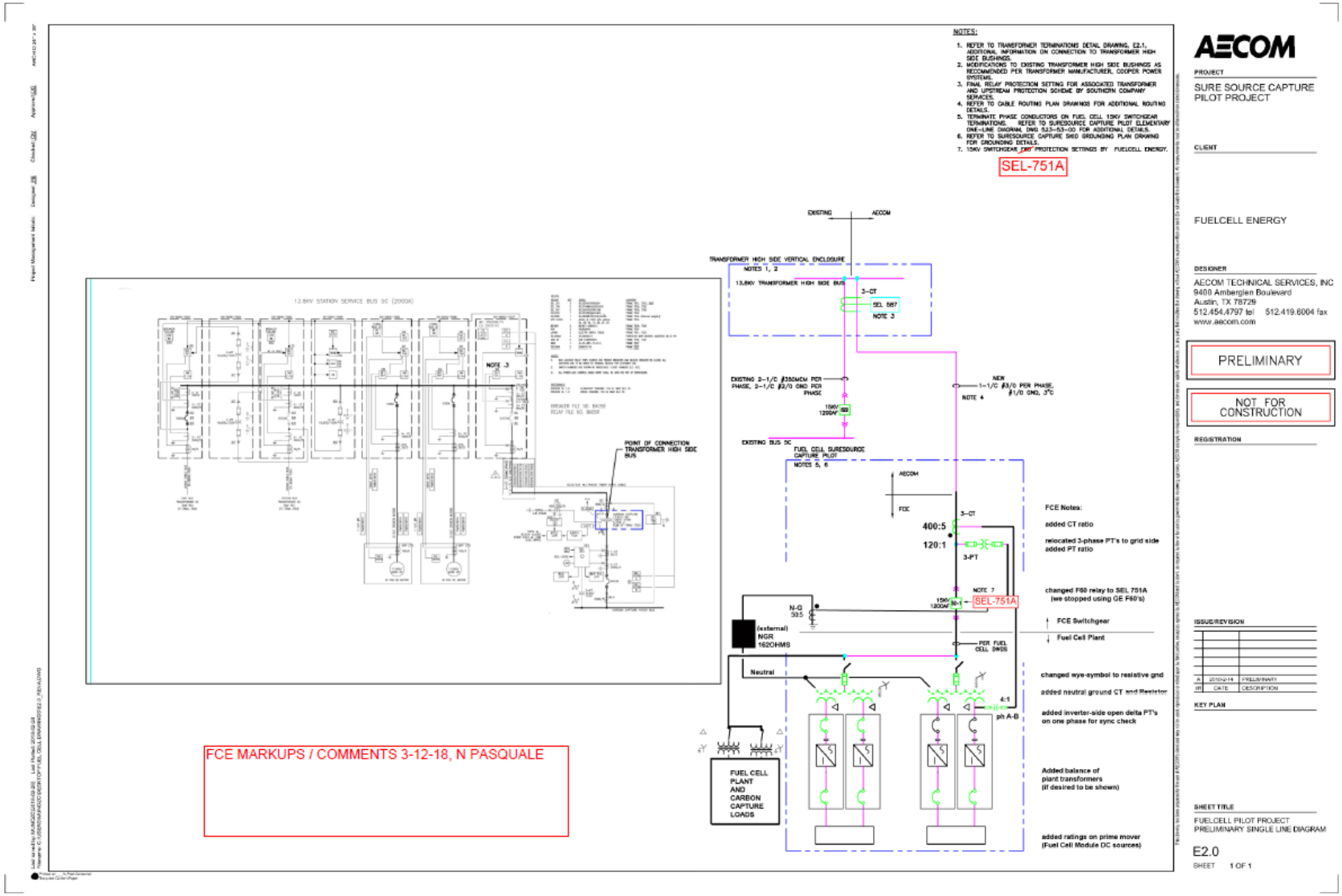

Figure 2-49. Pilot Plant to Plant Barry 13.8 kVA Tie-In Point One-Line Diagram

High Speed Data Interconnection:

The pilot plant requires a high speed data connection to enable remote monitoring and control of the unit. Several options were investigated with Southern Company for establishing the pilot plant high speed data connection. Figure 2-50 shows the connection options studied. Those options include:

1. Run a new fiber optic line from Highway 43 to a Point of Presence (POP) location nearby the Pilot Plant and run a new Ethernet from the POP to the Pilot Plant Remote Monitoring and Control System (RMCS).
2. Connect the Pilot Plant RMCS via a new Ethernet connection to a local POP. Connect to the Internet through the existing Plant Barry Network to the ISP.
3. Connect the Pilot Plant RCMS via 2 pair of copper wire to a local POP and that continues through existing Plant Barry infrastructure through to the ISP connection from Highway 43.
4. Utilize a cellular modem gateway in the pilot plant to connect to a local cellular data service, eliminating the need for a hard-wired connection.

Unfortunately, high speed fiber optic connection points outside of the Plant Barry network are extremely limited at the plant. Therefore, Option 1 would require extensive site work and material costs to run a new fiber line from the main highway into the plant. This was deemed impractical due to cost and logistical concerns. Option 2, connecting behind the Plant Barry firewall, is not preferred due to security concerns. Option 3, connecting to a local copper wire POP, is being investigated to determine tie-point proximity and cost. Option 4, connecting to a local cellular data network, is the baseline option selected for the plant.

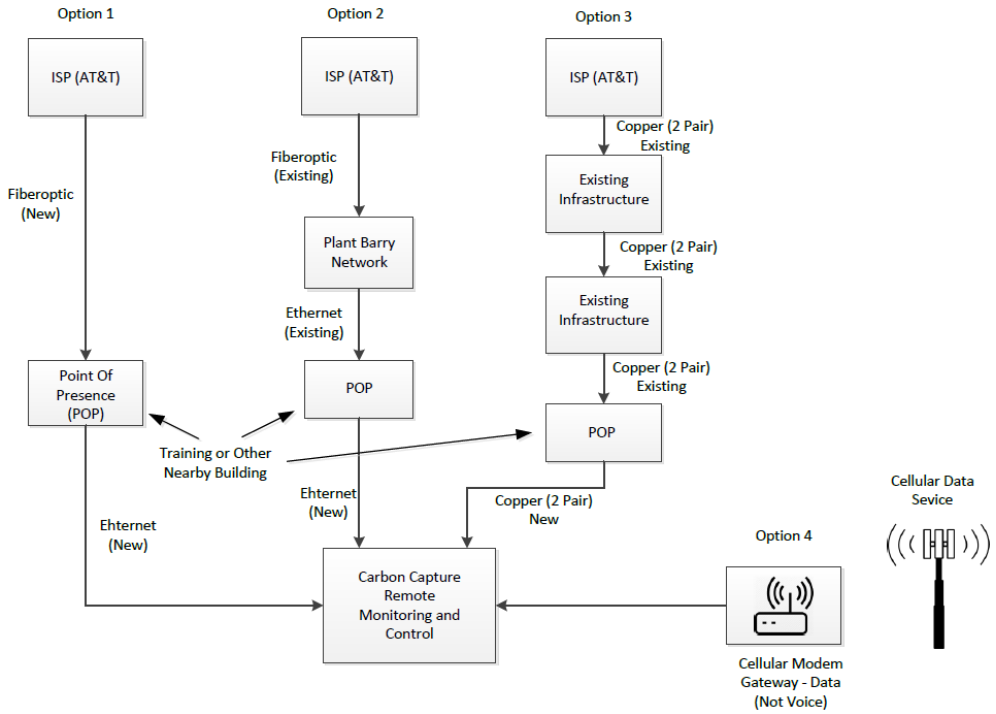

Figure 2-50. High Speed Data Connection Options for Pilot Plant at Plant Barry

Control Communication Interconnection:

Control communication interconnections will transmit information from the pilot plant to the Plant Barry Distributed Control System (DCS), and from Plant Barry to the pilot plant. Table 2-42 shows the schedule of control signals to be communicated between the pilot plant and Plant Barry. An Ethernet connection will transmit most of the information via Modbus communication protocol. An additional hard-wired Emergency shutdown (ESD) circuit will be installed to enable Plant Barry to initiate an immediate shutdown of the pilot plant to a fail-safe state.

Table 2-42. Pilot Plant Control and Communication Schedule with Plant Barry

Source	ID	Signal Name	Type	Detail
Plant Barry	1	Emergency Shut Down of Pilot Plant	Discrete	On/OFF
Plant Barry	2	OK to Export Power	Modbus	Yes/No
Plant Barry	3	Ok To Process Flue Gas	Modbus	Yes/No
Plant Barry	4	Plant Barry Scrubber Exhaust SO_2 level	Modbus	Data
Plant Barry	5	Plant Barry Scrubber pH	Modbus	Data
Fuel Cell	6	Plant Operation Mode	Modbus	Numeric Value
Fuel Cell	7	Flue Gas Flow Rate	Modbus	Data
Fuel Cell	8	Natural Gas Flow Rate	Modbus	Data
Fuel Cell	9	Demineralized Water Flow Rate	Modbus	Data
Fuel Cell	10	Net Power Generation	Modbus	Data

2.5.5 Site Layout and Foundations

The pilot plant site location was determined through an iterative process. Several potential locations were initially identified, including in the area of the Unit 5 scrubber, south of the existing slipstream pipe rack, and east of the scrubber-based CCS plant at Plant Barry. Through consultation with Southern Company and after evaluating the cost and technical trade-offs of the various locations, it was decided to locate the pilot plant to the south of the slipstream pipe rack. Figure 2-51 shows the pilot plant site location and the expected interconnection locations and routing.

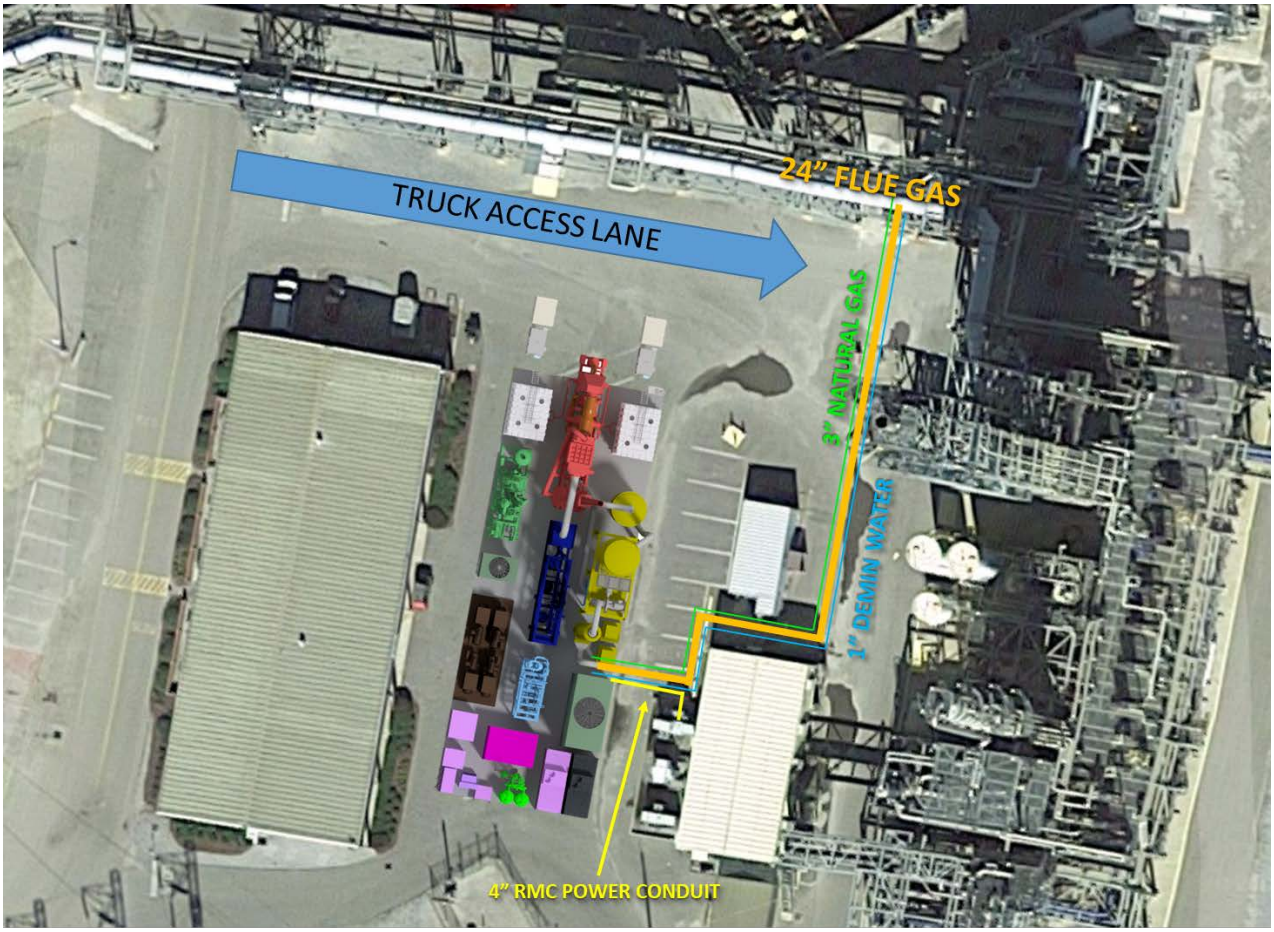

Figure 2-51. Pilot Plant Site Location and Interconnections

Originally the plant was oriented with the modules on its western side and the flue gas cleanup train up against the existing flue gas pipeline to the north. Upon review, Plant Barry personnel were concerned that the plant would block a truck access lane just south of the existing pipe rack. This development caused the team to re-orient the plant to fit between existing buildings in the parking lot south of the original site. The modules are now located on the north end of the plant as shown in Figure 2-51.

The new site and orientation of the plant has created new and different constraints with respect to packaging and access. Both short ends of the plant have significantly more access than they previously had. The long side of the plant that contains the flue gas cleanup train now has small vehicle access (pickup truck, forklift) that did not exist previously. On the other hand, the long side of the plant with the anode gas compressor has significantly reduced access. In order to take advantage of the access that we do have around the plant, the design team, in conjunction with AECOM, worked to reduce the amount of obstructions in these access lanes. To facilitate access and minimize the number of discreet tie point locations, plant interconnections are routed to one location in the plant. All process gasses and electrical connections will interface with the plant in one area and utilize the same pipe rack (for above grade connections).

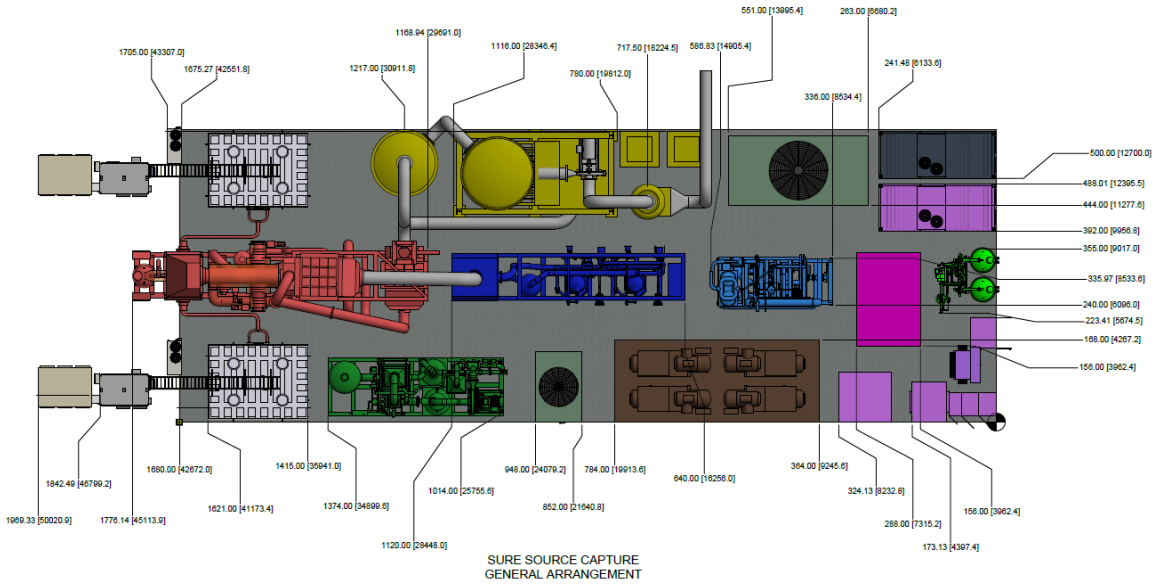

Figure 2-52. Skid Location Control Drawing

Civil engineers from AECOM utilized data generated by FCE to produce preliminary pilot plant general arrangement and foundation details drawings for the site. FCE provided skid location control information (shown in Figure 2-52), tie-in data and estimated skid footprints and weights. The site drawings will be updated and finalized after procurement activities commence and final skid support details are obtained from equipment vendors. All foundation designs will be reviewed and signed by civil engineers before being accepted.

CONCLUSIONS

All tasks under BP1 for this project have been completed in accordance with the project plans. These tasks included completing the preliminary TEA and EH&S assessment studies, as well as the design of a pilot-scale ECM-based CEPACS system. The results are summarized below.

Techno-Economic Analysis

The preliminary TEA has evaluated the merits of the application of ECM technology for Carbon Capture against the amine scrubbing technology as applied to a Reference 550 MW Pulverized Coal (PC) supercritical steam cycle power plant. The system study indicated that the ECM-based CEPACS plant provides substantial additional power (in excess of the original PC plant) to the grid, which contributes significantly to the reduction of the cost of electricity. The following is a summary of the results:

- The CEPACS plant layout was developed. The plant is divided into 8 Sections with 208 stacks per section. The total number of ECM stacks required is 1,664.
- The CEPACS plant selected operating point corresponds to a CO_2 system flux of 128 scc/s/m^2.
- The ECM Stack average cell voltage of 0.730 volts was used as the operating point for modeling. This performance level has been verified in full-area bench scale ECM stack testing conducted at system conditions with simulated PC plant flue gas.
- The configuration of electrical equipment was selected.
- The CEPACS plant generates an additional 319 MWe while capturing >90% of CO_2 from the PC plant flue gas.
- The system case comparison is based on the ECM carbon capture technology applied to the supercritical PC plant. The COE for the Reference 550 MW PC Plant equipped with CEPACS (Case 3) is 31% below that for the PC Plant equipped with Amine based Carbon Capture system (Case 2).
- Case 3 has a lower Total Overnight Cost (TOC of $2,842 /kW) and higher overall efficiency (40.7% HHV) among the two carbon capture equipped systems.
- The Reference PC Plant equipped with the CEPACS system has the lowest water consumption per unit of electricity produced. It actually reduces the water consumption of the Reference PC Plant, partially due to water-producing capabilities of the ECM.
- The Reference PC Plant equipped with the CEPACS system has the lowest emissions of NO_x, SO_x, and mercury per unit of electricity produced. ECM has the well-established capabilities for destroying a significant amount (>70%) of NO_x.
- The Reference PC Plant equipped with the CEPACS plant has a cost of $30.85/ton ($34.00/tonne) of CO_2 captured, which is lower than that for the PC plant equipped with the amine-based carbon capture alternative (Case 2).
- Sensitivity analyses were performed to determine the effect of natural gas price on COE, and cost of CO_2 captured and avoided. At the recent (2015) natural gas price ($2.27/MMBTU, 2011 dollar basis), the CEPACS-equipped PC plant achieves:
    - COE of 90.6 mills/kWh, a 10.9% increase over the Reference PC plant without capture

- $14.19/tonne of CO_2 Captured
- $10.74/tonne.of CO_2 Avoided

EH&S Assessment

The preliminary EH&S assessment of the Electrochemical Membrane (ECM) CO_2 capture process was conducted. The study was based on the carbon capture system size suitable for a reference 550 MW Pulverized Coal (PC) power plant. Major conclusions related to the gaseous, liquid and ancillary emissions from the ECM plant are summarized here. Overall, no major emissions of concern are expected from the CEPACS plant.

GASEOUS EMISSIONS

- Case 3 (PC + CEPACS) has the lowest CO_2 emissions when compared to Case 1 (PC plant) and Case 2 (PC + Amine based CO_2 capture). Since the CEPACS system generates additional power, the CO_2 emissions (normalized by total plant output) are ~55% lower than for Case 2.
- Case 3 has significantly lower emissions of SO_2, NO_x, and PM than required by the NSPS MATS rules.
- SO_2 emissions are very low for Case 3 due to the CEPACS Polishing scrubber required to protect the Carbon Capture technology.
- The ECM process reacts and chemically reduces more than 70% of the flue gas NO_x content. The Case 3 NO_x emission rate of 0.052 kg/MWh is 16.3% of the MATS emission limit of 0.32 kg/MWh.

LIQUID EMISSIONS

- The cooling tower blowdown water is utilized as feed water to the CEPACS Polishing FGD scrubber. This reduces the net water withdrawal of the CEPACS system.
- The current water management system design limits remaining plant liquid discharge to Off-Design operations. Non-zero Off-Design water discharge would be directed to the Waste Water clarifier, then to the Permitted Discharge and Solid Waste.
- Boiler blowdown water is directed to the site's waste treatment system for further treatment before disposal. The site's final treatment generally includes pH neutralization, biological oxygen demand control and removal of suspended solids.
- Water recovered from the dewatering system (sulfur polishing unit) is typically settled and ultimately discharged through a plant's wastewater outfall.
    - Elimination of this discharge requires an impact analysis of the resulting increased chloride concentration on the FGD materials of construction to determine if it is economically viable option.

ANCILLARY EMISSIONS AND SOLID WASTES

- Heavy metals are chiefly removed with the fly ash via particulate control in the PC plant. A small percentage of the heavy metals will pass through to the FGD scrubber and polishing scrubber but are not expected to be above concentrations of concern.
    - If heavy metals are found in the scrubber gypsum product, the product will not be sold and instead will be landfilled.

- Limestone and limestone slurry management is not subject to specific requirements due to pH of toxicity. Dust generation is minimized through wet grinding.
- The spent Sulfur sorbent media is copper based and is subject to management and disposal per the RCRA and DOT waste management as hazardous waste.
- The Low Temperature Shift catalyst is copper based and is subject to RCRA Tier II reporting and management under hazardous waste regulations.
    - No significant quantities of this media are expected to be generated as a waste through the life of the CEPACS plant.
- Spent filter cartridges from water treatment are expected to be generated every 3-4 months based on water demand and particulate concentration.
- The ECM Stacks are comprised of materials that are potentially 100% recyclable though a spent stack is subject to management under the RCRA Hazardous Waste regulations.
    - Dielectrics comprise 0.8% of an ECM stack. Broken or unusable dielectrics will be disposed of.
    - All other components including stainless steel, cell packages and exotic metals can either be reused or recycled.
- Ammonia is present as a refrigerant in the CEPACS absorption chillers and is likely present in SCR unit of the PC Plant for NO_x removal. Due to the quantities involved in the CEPACS process, a PSM/RMP program for ammonia management for the SCR process would likely require modification to include the ammonia in the CEPACS process.

Detailed FEED for CEPACS Pilot Plant

The detailed FEED package for FuelCell Energy's MW-class ECM-based CO_2 capture pilot system is complete. The design package includes tie-ins to interconnect the pilot plant to the existing infrastructure and flue gas supply at Southern Company's Plant Barry Unit 5 in Bucks, Alabama. The ECM-based CEPACS pilot plant is designed to capture ≥90% of CO_2 (67 tons/day) from a PC plant flue gas slipstream and produce high-purity (≥95%) CO_2, in accordance with the project objectives. The design has progressed to the point at which equipment/component procurement, skid final design and fabrication, and site preparation activities can be initiated in the subsequent project stage.

REFERENCES

[1] A. Pigeaud & J. Klinger, 1987, Study of the effect of soot, particulate, and other contaminants on molten carbonate fuel cells fueled by coal gas, Final report (August 28, 1984 - August 28, 1987), Energy Research Corporation, DEAC21-84MC21154

[2] AECOM, Fuel Cell Energy Flue Gas Polishing Memo, August 11th, 2016

[3] Cost and Performance Baseline for Fossil Energy Plants Volume 1: Bituminous Coal and Natural Gas to Electricity', Revision 2a, DOE/NETL-2010/1397, September 2013.

[4] E. Leung, Effect of coal derived contaminants on MCFC performance, 2016

[5] EG&G Technical Services, Inc., Fuel Cell Handbook, Seventh Edition, Under Contract No. DE-AM26-99FT40575, U.S. Department of Energy, November, 2004

[6] Energy research corporation, Effect of Coal-derived trace species on performance of molten carbonate fuel cells, May 1992, DE93-000203

[7] ESPI Corp. MSDS

[8] Farooque, M., "Integrated high efficiency fossil fuel power plant/fuel cell system with CO2 emissions abatement", United States Patent 7,396,603, issued July 08, 2008.

[9] K. Juda-Rezler & D. Kowalczyk, Size Distribution and Trace Elements Contents of Coal Fly Ash from Pulverized Boilers, Pol. J. Environ. Stud. Vol. 22 No. 1 (2013), 25-40

[10] M. Kawase, Y. Mugikura, T. Watanabe, Y. Hiraga, T. Ujihara, Effects of NH3 and NOx on the performance of MCFCs, Journal of Power Sources, 104 (2002) 265-271

[11] O.A. Marina, Molten Carbonate Fuel Cell Interactions with Impurities in Synthetic Flue Gas, Pacific Northwest National Laboratory, Topical Report, 2014

[12] Quality Guidelines for Energy System Studies: Cost Estimation Methodology for NETL Assessment of Power Plant Performance, April 2011, DOE/NETL-2011/1455

[13] R.H. Perry & C.H. Chilton, Chemical engineers' handbook, 5th Edition, McGraw-Hill chemical engineering series, 1973

[14] Scope and Reporting Requirements for NETL System Studies, May 2010, DOE/NETL

[15] Updated Costs (June 2011 Basis) for Selected Bituminous Coal Cases, August 2012, DOE/NETL-341/082312

[16] U.S. Energy Information Administration, "Table 3. Selected national average natural gas prices, 2011-2016," Nat. Gas Mon., vol. 1, no. 5, p. 7, 2016.

[17] "U.S. natural gas pipeline projects," Federal Energy Regulatory Commission (FERC), trade press, company websites, SNL Financial, and BENTEK Energy LLC (Bentek), 2015. [Online]. Available: http://www.eia.gov/naturalgas/data.cfm. [Accessed: 20-Jun-2016].

LIST OF ACRONYMS

AC	Alternating Current
ACFM	Actual Cubic Feet per Minute
ADEM	Alabama Department of Environmental Management
AECOM	AECOM Corporation (formerly URS Corporation)
ANSI	American National Standards Institute
BFD	Block Flow Diagram
BFW	Boiler Feed Water
BOM	Bill of Materials
BOP	Balance of Plant
BP	Budget Period
BTU	British Thermal Unit
CAD	Computer-Aided Design
CAE	Computer-Aided Engineering
CC	Carbon Capture
CCUS	Carbon Capture, Use, and Sequestration
CEMS	Continuous Emissions Monitoring System
CEPACS	Combined Electric Power And Carbon-dioxide Separation
CF	Capacity Factor
CFD	Computational Fluid Dynamics
C/I	Cathode-In
C/O	Cathode-Out
COE	Cost of Electricity
CP	Coefficient of Performance
DC	Direct Current
DCCT	Direct Contact Cooling Tower
DCS	Distributed Control System
DFC	Direct Fuel Cell (FCE Molten Carbonate Fuel Cell)
DOE	United States Department of Energy
ECC	Energy Concepts Company, LLC
ECM	Electro-Chemical Membrane
EH&S	Environmental Health and Safety
EPA	Environmental Protection Agency
ESD	Emergency Shutdown

FCE	FuelCell Energy, Inc.
FEA	Finite Element Analysis
FEED	Front End Engineering Design
FG	Flue Gas
FGD	Flue Gas Desulfurization
F/I	Fuel-In
F/O	Fuel-Out
GC	Gas Chromatography
MS	Mass Spectrometry
GPM	Gallons per Minute
HAZOP	Hazard and Operability Analysis
HHV	Higher Heating Value
H&MB	Heat and Mass Balance
HMI	Human Machine Interface
HP	Horsepower
HRSG	Heat Recovery Steam Generator
HVAC	Heating Ventilation Air Conditioning
HZ	Hertz
IWC	Inches of Water Column gauge pressure
I/O	Input/Output
IEEE	Institute of Electrical and Electronics Engineers
ISBL	Inside Battery Limits
ISTC	Illinois Sustainable Technology Center
kW, kWe	Kilo-Watt, Kilo-Watt electricity
kWh	Kilo-Watt-hour
LB	Pound
LDL	Low Detection Limit
LHV	Lower Heating Value
LMTD	Logarithmic Mean Temperature Difference
LNB	Low NOx Burner
LTSC	Low Temperature Shift Converter
mA	Milliamp
MCFC	Molten Carbonate Fuel Cell
MMBtu	Million British Thermal Unit

MW, MW_e	Mega-Watt, Mega-Watt electricity
NCCC	National Carbon Capture Center
NETL	National Energy Technology Laboratory
NG	Natural Gas
NGCC	Natural Gas Combined Cycle
NGR	Neutral Grounding Resistor
OFA	Overfire Air
O&M	Operating and Maintenance
P&ID	Piping & Instrumentation Diagram
PC	Pulverized Coal
PCC	Point of Common Coupling
PCU	Power Conversion Unit
PFD	Process Flow Diagram
PLC	Programmable Logic Controller
PM	Particulate Matter
PMP	Project Management Plan
PNNL	Pacific Northwest National Laboratory
POTW	Publicly Owned Treatment Works
POI	Point of Interconnection
ppb, ppb_v	parts per billion, parts per billion by volume
ppm, ppm_v	parts per million, parts per million by volume
psia	Pound per square inch absolute pressure
RFQ	Request for Quotation
SCS	Southern Company Services
SCFM	Standard Cubic Feet per Minute
SOPO	Statement of Project Objectives
T/D	Tons per Day
TM	Trace Metal
UL	Underwriters Laboratories
US	United States of America
USD	US Dollars
V	Volt
VBA	Visual Basic for Applications

Appendix A – Piping Line List Excerpt

LINE NUMBER						REFERENCE			CONDITIONS					
						DESCRIPTION		P&ID	OPERATING					
FLUID SVC CODE	LINE SEQ NO.	PIPE SPEC	SIZE	INSUL/ HEAT TRACE	SCH/ THK	DESCRIPTION	Pipe-Flo Pro Line Number	523S-31-02	STATE	Pressure PSIA	Temp. Deg. F	Design Case/ Sizing Basis	Basis for sizing ACFM (GPM)	Max Flow ACFM (GPM)
PW	1000	PX	1"	ET(W)		Backflow Preventer to Water Treatement System		4	L	75	68		(15) (est)	(15) (est)
DW	1003	AF	1"	N/A		Storage Tank to Pump	100	4	L	19	68		(2)	(2)
DW	1004	AF	1"	N/A		Pump to Water Treatment #2	101	4	L	75	68		(2)	(2)
PW	1016	AF	3"	ET(W)		From DCCT Bottoms to DCCT Pump	114	17	L	15.8	163	CFB 70%	(70)	(70)
PW	1017	AF	3"	ET(W)		DCCT Pump to DCCT Cooler (100-HX-507)	130	17	L	46	147	Fuel Enable	(70)	(70)
PW	1018	AF	3"	ET(W)		DCCT Cooler (100-HX-507) to DCCT	111	17	L	45	119	CFB 70%	(70)	(70)
PW	1019	AF	3"	ET(W)		DCCT Pump to Saturator Water Heater	105	17, 6	L	46	147	CFB 70%	(76)	(76)
WW	1022	PX	2"	ET(W)		Overflow/Drain to Sewer		4	L	15	68			
WW	1023	SSTB	1/2"	ET(W)		DCCT Bottoms (drain) to Sewer		17	L	15.8	163			
PW	1025	AF	3"	ET(W)		Saturator Electric Water Heater to Saturator (Overhead)	106	6	L	46	177	CFB 70%	(76)	(76)
PW	1026	AF	3"	ET(W)		Saturator Bottoms to Saturator Pump	107	6	L	19	147	CFB 70%	(75)	(75)
WW	1027	SSTB	1/2"	ET(W)		Saturator Bottoms (Drain) to Sewer		6	L	19	147			
PW	1028	AF	3"	ET(W)		Saturator Water Pump to Line 1017	132	6, 17	L	46	147	Fuel Enable	(73)	(73)
PW	1029	AF	1/2"	ET(W)		Line 1028 Bypass/XV-587		6	L	46	147			
PW	1030	AF	1"	ET(W)		Water Supply from Site through Backflow Preventer		4	L	75	68		(15) (est)	(15) (est)
PW	1038	AF	3"	ET(W)		100-PU-502 to Line 1019, XV-582		6	L	46	147			
PW	1031	PX	1"	ET(W)		Line 1012 to Caustic Scrubber Demister Pad		9	L	75	68			
PW	1036	PX	1"	ET(W)		Host Site Supply to Chiller Hybrid Cooler		22	L	75	68		(20)	(20)
WW	1037	PX	3/4"	ET(W)		Chiller Hybrid Cooler Blowdown Drain		22	L	40	85			
WW	1040	AF	1/2"	ET(W)		Low Pressure Separator #1 to TBD		18	L	25	70			
WW	1045	AF	1/2"	ET(W)		PreCooler Separator Drain		18	L	25	70			
NG	2001	AA1	3"	N/A		NG - customer supply to safety shutoff valves	200	5	G	35.00	68	SS4000 line sizing	N/A	N/A
NG	2002	AA1	3"	N/A		NG - safety shutoff to desulfurizer tanks	200	5	G	27.10	68	SS4000 line sizing	N/A	N/A
NGD	2003	AA1	3"	N/A		NG - Desulfurizer 1 to Desulfurizer 2	202-1	5	G	26.73	68	SS4000 line sizing	N/A	N/A
NGD	2004	AA1	3"	N/A		Desulfurizer Tank 2 to Main NG Feed to Plant	202	5	G	26.25	68	SS4000 line sizing	N/A	N/A
NGD	2007	AA1	3"	N/A		Main Natural Gas Feed to Anode Recycle Tee	203, 203-1	5,6	G	25.82	68	CFB 70%	179	266
NGD	2008	AA1	8"	N/A		Anode Recycle Tee to Saturator Inlet	205	6	G			CFB 70%	798	798
NGD	2019	AA1	2"	N/A		Burner tee from main line to burner	204, 204-1	5, 13	G	25.82	68	SS4000 line sizing	45	45
NG	2021	AA1	3"			Natural Gas Supply Vent	----	5	G	14.70	68	SS4000 line sizing	N/A	N/A
NGD	2022	AA1	1.5"			Desulfurizer Tank purge vent line	----	5	G	26.73	68	SS4000 line sizing	N/A	N/A
FG	2107	CF	10"	Ih		Saturator to Saturator SuperHeater	208, 208-1	6	G			CFB 70%	1363	1,363
FG	2108	CF	10"	Ih/ET(W)		Saturator SuperHeater to TV-220A	209, 235	6, 7	G					
FG	2109	CF	10"	Ih		Saturator SuperHeater Bypass	236	6	G	17.71	177	CFB 70%	1947	1,947
FG	2110	CF	8"	ET(P)		HumiHX Outlet to Preconverter	210, 250	7,8	G	17.20	450	CFB 70%	2072	2,637
FG	2111	AF	10"	ET(P)		Preconverter Outlet to A/B Module Tee	213	8	G	16.96	760	SS4000 line sizing	2488	2,670
FG	2112	AF	8"	ET(P)		Module A/B Split to Module A Anode in Tee	213-1	8,14	G	16.92	760	SS4000 line sizing	1244	1,335
FG	2118	CF	6"	ET(W)		Saturator SuperHeater to HumiHX	245	7	G					
AG	3000	AF	10"	Ih		Anode Exhaust Module A	213-5	14, 16	G	16.32	1157	SS4000 line sizing	3979	4,281
AG	3002	AF	10"	Ih		Anode Exhaust Module B	213-6	14, 16	G	16.32	1157	SS4000 line sizing	3979	4,281
AG	3003	CF	6"	Ih		Saturator Water Heater Bypass	233	6	G					
AG	3004	AF	16"	Ih		Combined Anode Exhaust to AEC	214, 453, 454	16	G	16.30	1157		7958	8,561
AG	3005	AF	12"	Ih		DCCT to AEB	220	17	G	15.18	80	Fuel Enable Case	2212	2,597
AG	3006	AF	12"	Ih		AEB to Compressor Precooler	221, 600	17, 18	G	18.08	95	CFB 70%	1789	2,349
AG	3007	CF	16"	Ih		AEC to LTSC	215	16	G	16.19	400	CFB 70%	4282	5,009
AG	3008	CF	14"	Ih		LTSC to SSH	217, 224-1, 224	6, 16	G	15.51	477	CFB 70%	4908	5,617
AG	3009	CF	14"			SSH to SWH	212, 231	6	G	15.72		CFB 70%	4194	5,565
AG	3010	AF	8"	Ih		Main Anode Recycle Line	222, 226, 424	13, 17	G	17.68	50	Fuel Enable Case	2242	2,349
AG	3013	AF	8"	Ih		Main ARL to AEC Inlet, XV-450	451	13, 16	G			Fuel Enable Case	2236	
AG	3015	CF	14"	Ih		SWH to DCCT	219, 232	6, 17	G	15.34	340	CFB 70%	3327	3,745
AG	3018	AF	8"	Ih		Compressor Pre Chiller to Compressor (LP Separator)	601	18	G	17.91	50	CFB 70%	1744	1,744
FLG	4001	AF	24"	Ih		FG to Caustic Scrubber	420	9	G	14.32	298	CFB 70%		
FLG	4002	AF	24"	Ih		Caustic Scrubber to FG Blower	422, 436	9	G	13.84	100	CFB 70%		

LINE NUMBER						REFERENCE			CONDITIONS					
						DESCRIPTION		P&ID	OPERATING					
FLUID SVC CODE	LINE SEQ NO.	PIPE SPEC	SIZE	INSUL/ HEAT TRACE	SCH/ THK	DESCRIPTION	Pipe-Flo Pro Line Number	S23S-31-02	STATE	Pressure PSIA	Temp. Deg. F	Design Case/ Sizing Basis	Basis for sizing ACFM (GPM)	Max Flow ACFM (GPM)
FLG	4003	AF	16"	Ih		AEC to Main Mixing Plenum	413	13, 16	G	16.65	866	Stand Alone Case	10263	15,298
FLG	4004	AF	22"	Ih		BCO Bypass to Valve	416, 416-1	13	G	16.50	923	CFB 70%	13750	16,095
FLG	4008	AF	24"	Ih		FG Blower to Baghouse	422	9, 10	G	18.39	151	CFB 70%		
FLG	4009	AF	24"	Ih		Baghouse to Mist Eliminator	422-2	10	G	18.11	151	CFB 70%		
FLG	4010	AF	24	Ih		Mist Eliminator to FG PreHeater	422-3, 409		G	17.48	151	CFB 70%		
FLG	4013	AF	8"	Ih		Baghouse Recirculation Line		10	G					
FLG	4016	AF	14"	Ih		FG Preheater Outlet (4007) to AEC	412, 412-1	12, 16	G	17.09	331	Stand Alone Case		
FLG	4018	AF	30"	Ih		FG Heater to Main Mixing Plenum	440	12	G	16.61	949	CFB 70%		
FLG	4028	AF	12"	Ih		FG Heater Bypass (4007 to Plenum)	439	12	G	17.35		Stand Alone Case	4284	4,284
AIR	4101	AA1	18"	Is		Filter to Air Blower	400, 401	11	G	14.7	59	Stand alone case, DFC3000		
AIR	4102	AF	14"			Air Blower to FG PreHeater Outlet (4007)	402, 435	11, 12	G	17.55	104	Stand alone case, DFC3000		
AIR	4103	AF	6"			Air blower outlet (4102) to Burner	403, 425	11, 13	G	17.09	104	Stand alone case, DFC3000		
AIR	4104	AF	10"			Air Blower Outlet (4102) to FG Inlet to Preheater (4010)	408	11	G	17.88	104	GFB, 70%		
BEG	4201	AF	36"	Ih		BCO Exhaust to Tee	406, 430	13, 14	G	16.41	1181	CFB 70%	19950	24,503
BEG	4202	AF	18"	Ih		Hot Restart Bypass	431	13, 7	G			Fuel Enable	10866	10,866
BEG	4203	AF	18"	Ih		Module A Cathode Inlet	407-1	14	G	16.38	1071	Module Flange Size	0	0
BEG	4204	AF	18"	Ih		Module B Cathode Inlet	407-2	14	G	16.38	1071	Module Flange Size	0	0
N2	4304	AF	1"	N/A		Main N2 Line to AEC	450	23, 16	G			Fuel Enable Case	6.5 (est)	6.5 (est)
N2	4305	AF	1"	N/A		Main N2 Line to Saturator		6, 23	G			Purge	TBD	TBD
EG	4401	AF	18"	Ih		CATHODE EXHAUST MOD. A	501-3	7,14	G	16.00	1135	Module Flange Size	0	0
EG	4402	AF	18"	Ih		CATHODE EXHAUST MOD. B	501-4	7,14	G	16.00	1135	Module Flange Size	0	0
EG	4403	AF	36"	Ih		CATHODE EXHAUST from HumiHX	506	7, 12	G	15.61	1067	CFB 70%	32323	39,524
EG	4404	AF	30"	Ih		FG Heater to Chiller	507	12, 20	G	15.39	604	CFB 70%	21110	26,128
EG	4405	AF	30"	Ih		Chiller to FG Preheater	508	12, 20	G	15.14	456	Stand Alone Case	20743	22,576
EG	4406	AF	24"	Ih		Cathode Plant Exhaust	509	12, 25	G	14.84	250	Stand Alone Case	18488	18,895
CA	4501	AF	2"	N/A		Air Compressor Outlet to Compressed Air Branch		10	G					
HRG	5001	AF	1"	Ih		CO2/H2 Separator to PCV	304	21	G	264.0	-53	CFB 70%	30	30
HRG	5002	AF	3"	Ih		PCV to Chiller Inlet Cooler	305	21	G	24.15	-71	CFB 70%	390	390
HRG	5003	AF	6"	Ih		Chiller Inlet Cooler to Regen Gas Heater	306	19, 21	G	24.01	-31	CFB 70%	835	835
HRG	5004	AF	6"	Ih		Regen Gas Heater Bypass		19	G					
HRG	5005	AF	6"	Ih		Regen Gas Heater to Regen Gas Dryer	307	19	G	23.73	203	CFB 70%	1316	1,316
HRG	5006	AF	8"	Ih		Main HRG Line - Regen Gas Dryer to Burner Tee	308, 309	19, 13	G	23.49	191	Stand Alone Case	2086	2,100
HRG	5007	AF	8"	Ih		Burner Tee to Burner Inlet (FV-504)	424, 429, 427	13	G	23.01	191	Stand Alone Case	2098	2,098
HRG	5008	AF	8"	Ih		Burner Tee to NG Tee	303	6, 13	G	23.01	191	CFB 70%	623	623
CAG	5101	AF	2"	Ih		Compressor Outlet to Dryer	612	19	G	270.3	90	CFB 70%	99	99
CAG	5102	AF	1"	Ih		Compressor Recycle Line (Turn Down)		18	G				50 (Est)	50 (Est)
CAG	5103	AF	2"	Ih		Dryer to Chiller Pre-Cooler	613	19, 21	G	268.7	122	CFB 70%	109	111
CAG	5104	AF	2"	Ih		Chiller Pre-Cooler to Chiller Inlet Cooler	614	21	G	267.1	-21	CFB 70%	76	78
CAG	5105	AF	2"	Ih		Chiller Inlet Cooler to Absorption Chiller	615	21, 20	L/G	266.5	-24	CFB 70%	75	78
CAG	5106	AF	2"	Ih		Absorption Chiller to H2/CO2 Separator	616	20, 21	L		-52	CFB 70%	32	35
CAG	5107	AF	3"	Ih		Medium Pressure Compressor to Regen Gas Heater	621	18, 19	G	86.30	354	CFB 70%	320	320
CAG	5108	AF	3"	Ih		Regen Gas Heater to Compressor Intercooler 2	605	19, 18	G	85.26	278	CFB 70%	283	283
CO2	5201	AF	1"	Ih		CO2/H2 Separator to Medium Pressure CO2 Pump	617	21	L	266.2	-53	CFB 70%	(15)	(15)
CO2	5202	AF	1"	Ih		Medium Pressure CO2 Pump to Chiller Precooler	618	21	L	1115	-47	CFB 70%	(15)	(15)
CO2	5203	AF	1"	Ih		Chiller Precooler to High Pressure CO2 Pump	619	21	L	1105	47	CFB 70%	(18)	(18)
HTF	6001	AF	10"	N/A		Main HTF Line from Absorption Chiller to Chiller Hybrid Cooler		20, 22	L				(1824)	(1,824)
HTF	6013	AF	2"	Ih		HTF 6010 to Compressor Pre-Cooler		22, 18	L				(50)	(50)
CS	7001	ALTB	1/2"	ET(W)		Peroxide Solution From Pump to Recirculation Line		9	L					
CS	7002	SSTB	1"	Ih		Caustic Tank #1 to Pump		9	L					
AG						Internal to Compressor	603		G	17.68	50			
CAG						Internal to Compressor	606		G	84.36	90			

Appendix B – Instrument List Excerpt

P&ID						Instrument					I/O					Rack / Slot / Channel			IP Addressing	
Sh.	Type	#	Suf	Service Description	Skid Desc.	Size	Fail Action	Actutation Speed	Preferred Body Type	Remarks	Desc	Type	Mod	Reference	Volt	Rack	Slot	Chan	Type	IP ADDRESS
4	CT	101		Product Water Tank	Water Treatment System		n/a	n/a	n/a	Tank	Conductivity	AI	4-20mA	100-TK-501	24 VDC	0	0	0	Profinet	192.168.254.003
4	CT	102		Product Feed Water Conductivity	Water Treatment System	1"	n/a	n/a	n/a		Conductivity	AI	4-20mA	DW-1005	24 VDC	0	0	0	Profinet	192.168.254.023
4	FT	102		Excess Water to Host Site Water Treatment	Water Treatment System	1/2"	n/a	n/a	n/a		Flow	AI	4-20mA	WW-1009	24 VDC	0	0	0	Profinet	192.168.254.004
4	LSL	121		Product Water Tank	Water Treatment System		n/a	n/a	n/a	Tank	Level	AI	4-20mA	100-TK-501	24 VDC	0	0	0	Profinet	192.168.254.016
4	LT	120		Water	Water Treatment System	1/2"	n/a	n/a	n/a		Level	AI	4-20mA	100-TK-501	24 VDC	0	0	0	Profinet	192.168.254.018
4	PT	105		Presure Transmitter	Water Treatment System	3/8"	n/a	n/a	n/a		Pressure	AI	4-20mA	DW-1005	24 VDC	0	0	0	Profinet	192.168.254.022
11	VT	405		Vibration Sensor	Fresh Air Blower		n/a	n/a	n/a		Vibration	AI	4-20mA	400-BL-201		0	0	0	Profinet	192.168.254.100
6	ZSC	217		NG Supply Control	Water Recovery System		n/a	n/a	n/a		Valve	AI	4-20mA	NGD-2007		0	0	0	Profinet	192.168.254.056
11	ZSC	412		Exhaust Gas Recycle Permissive	Fresh Air Blower		n/a	n/a	n/a		Position	AI	4-20mA	400-SL-201		0	0	0	Profinet	192.168.254.099
6	FV	217		NG Supply Control	Water Recovery System	2"	Fail Closed	Typical	Specify		Valve	AO	4-20mA	NGD-2007		0	0	0	Profinet	192.168.254.056
13	FV	504		Recycle Gas Flow Control Valve to Burner	Burner & Catalytic Oxidizer	6"	Fail Closed	Typical	Specify		Valve	AO	4-20mA	HRG-5007		0	0	0	Profinet	192.168.254.098
8	JE	229	A	Oxidizer SCR A SP	Fuel Gas Preconverter		n/a	n/a	n/a		SCR	AO	4-20mA	200-RR-203		0	0	0	Profinet	192.168.254.092
12	PV	580		Exhaust Gas Flow Control Valve	Fresh Air Preheat	24"	Fail Last	Typical	Butterfly - Lug or Wafer	T=521 F	Valve	AO	4-20mA	EG-4406		0	0	0	Profinet	192.168.254.099
7	TV	220	B	Fuel Gas to Polisher	Fuel Gas Preconverter	10"	Fail Last	Typical	Butterfly - Lug	T=446 F	Valve	AO	4-20mA	FG-2120		0	0	0	Profinet	192.168.254.092
6	TV	241	A	Saturator 504 Temp Valve S/P	Water Recovery System	10"	Fail Last	Typical	Butterfly - Lug		Valve	AO	4-20mA	300-HX-504		0	0	0	Profinet	192.168.254.071
6	TV	241	B	Saturator 504 Temp Valve S/P	Water Recovery System	10"	Fail Last	Typical	Butterfly - Lug		Valve	AO	4-20mA	300-HX-504 Byp.		0	0	0		
6	TV	242	B	Saturator Bypass Valve	Water Recovery System	14"	Fail Last	Typical	Butterfly - Lug		Valve	AO	4-20mA	300-HX-505 Byp.		0	0	0		
16	TV	409		Air+FG Flow to AEC	Anode Cooling	14"	Fail Last	Typical	Butterfly - Lug or Wafer	T=279 F	Valve	AO	4-20mA	FLG-4016		0	0	0	Profinet	192.168.254.100
12	TV	422	A	Flue Gas Heater Inlet Flow Control Valve	Fresh Air Preheat	20"	Fail Last	Typical	Butterfly - Lug or Wafer	T=446 F	Valve	AO	4-20mA	FLG-4007		0	0	0	Profinet	192.168.254.098
20	AE	650		NH3 Gas detector Fault	Absorbtion Chiller		n/a	n/a	n/a		Fault	DI	NO	500-HE-502		0	0	0	Profinet	192.168.254.100
8	ASH	215		Flame Detector Fault	Fuel Gas Preconverter		n/a	n/a	n/a		Flame	DI	NO	PLC		0	0	0	Profinet	192.168.254.094
8	AT	213		Combustible Gas detector Fault	Fuel Gas Preconverter		n/a	n/a	n/a		Fault	DI	NO	PLC		0	0	0	Profinet	192.168.254.095
13	BX	293		UV Scanner	Burner & Catalytic Oxidizer		n/a	n/a	n/a		Alarm	DI	NO	400-HE-201		0	0	0	Profinet	192.168.254.099
6	FS	239		N2 Gas Supply Flow Switch	Fuel Gas Preconverter		n/a	n/a	n/a		FSw	DI	NO	N2-4305		0	0	0	Profinet	192.168.254.087
4	HS	300	A	Estop Interior	Water Treatment System		n/a	n/a	n/a	TURK	Switch	DI	NC	PLC	24 VDC	0	0	0	Profinet	192.168.254.031
4	HS	300	B	Estop Exterior	Water Treatment System		n/a	n/a	n/a	TURK	Switch	DI	NC	PLC	24 VDC	0	0	0	Profinet	192.168.254.032
9	JS	502		Pump Start/Stop	Caustic Scrubber & FG Blower		n/a	n/a	n/a		Fault	DI	NO	400-PU-502		0	0	0	Profinet	192.168.254.095
15	LS	362		Water Seal Level High	Anode Water Seal		n/a	n/a	n/a		Lswitch	DI	NO	300-VE-203		0	0	0	Profinet	192.168.254.099
18	XV	585		AGC Recycle Flow Control Valve Closed Switch	Anode Gas Compresion	1"	Fail Last	Fast	Specify		Valve	DI	NO	CAG-5102		0	0	0	Profinet	192.168.254.099
14	HE	900	A	Heat Trace	DFC Module Piping & Control		n/a	n/a	n/a		Element	DO	NO	FG-2112	120 VAC	0	0	0	Profinet	192.173.254.096
9	JS	501		Pump Start/Stop	Caustic Scrubber & FG Blower		n/a	n/a	n/a		Status	DO	NO	400-PU-501		0	0	0	Profinet	192.168.254.092
6	JS	595		Electric Water Heater On/off	Water Recovery System		n/a	n/a	n/a		SCR	DO	NO	300-HX-506		0	0	0	Profinet	192.168.254.071
13	XS	292		Spark ignitor	Burner & Catalytic Oxidizer		n/a	n/a	n/a		Switch	DO	NO	400-HE-201		0	0	0	Profinet	192.168.254.099
10	XS	801		Compressor Start/Stop	Baghouse		n/a	n/a	n/a		Mstart	DO	NO	400-VE-506		0	0	0	Profinet	192.168.254.099
4	XV	101	A	Valve On/Off	Water Treatment System	1"	Fail Closed	Typical	Specify		Valve	DO	NO	PW-1002	24 VDC	0	0	0	Profinet	192.168.254.009
16	XV	461		Nitrogen Purge to Shift Reactor	Anode Cooling	1"	Fail Closed	Typical	Specify		Valve	DO	NC	N2-4304		0	0	0	Profinet	192.168.254.099
17	XV	463		Nitrogen Purge to DCCT Water Cooler	Water Recovery System	1/2"	Fail Closed	Typical	Specify		Valve	DO	NO	N2-4301		0	0	0	Profinet	192.168.254.100
22	XV	610		Feed Water to CHC Basin Control Valve	Closed Loop Cooling System	1"	Fail Closed	Typical	Specify		Valve	DO	NO	PW-1036		0	0	0	Profinet	192.168.254.098
24	YS	590		Analyzer System Fault	Analytical Equipment	n/a	n/a	n/a	n/a		Switch	DO	NO	500-AE-501		0	0	0	Profinet	192.168.254.099
22	TE	601		CHC Recirculation Pump Discharge Temperature	Closed Loop Cooling System		Fail High	n/a	n/a		Temp	TC/RTD	TC/RTD	600-PU-101		0	0	0	Profinet	192.168.254.099
22	TE	602		Main HTF Circulation Pump Discharge Temperature	Closed Loop Cooling System		Fail High	n/a	n/a		Temp	TC/RTD	TC/RTD	HTF-6004		0	0	0	Profinet	192.168.254.100
20	TE	603		HTF Feed Temperature to Mech Chiller Condenser	Absorbtion Chiller		Fail High	n/a	n/a		Temp	TC/RTD	TC/RTD	CAG-5106		0	0	0	Profinet	192.168.254.099
22	TE	605		High Temp Condenser Return HTF Temperature	Closed Loop Cooling System		Fail High	n/a	n/a		Temp	TC/RTD	TC/RTD	HTF-6001		0	0	0	Profinet	192.168.254.098
22	TE	606		CHC HTF Return Temperature	Closed Loop Cooling System		Fail High	n/a	n/a		Temp	TC/RTD	TC/RTD	HTF-6001		0	0	0	Profinet	192.168.254.100
22	TE	607		Compressor Precooler HTF Return Temperature	Closed Loop Cooling System		Fail High	n/a	n/a		Temp	TC/RTD	TC/RTD	HTF-6015		0	0	0	Profinet	192.168.254.098
24	AE	501	A	Analytical Gas Probe	Caustic Scrubber		n/a	n/a	n/a		Data	n/a	E I/P	500-AE-501		x	x	x	Profinet	192.168.254.098
6	CHV	240		Fuel Gas Humidification	Fuel Gas Humidification	3"	n/a	n/a	n/a			Check Valve		NGD-2007		n/a	n/a	n/a	n/a	n/a
9	FH	510		Caustic Scrubber	Caustic Scrubber	1"	n/a	n/a	n/a			Flex Hose		400-TK-502		n/a	n/a	n/a	n/a	n/a
5	FO	240		Fuel Gas desulfurization	Fuel Gas desulfurization	1-1/2"	n/a	n/a	n/a			Orfice		NGD-2022		n/a	n/a	n/a	n/a	n/a
4	HV	103		Water Treatment System	Water Treatment System	1/2"	n/a	n/a	n/a	Sample		Hand Valve	NO	HV-103		n/a	n/a	n/a	n/a	n/a
7	HV	231	B	Fuel Gas Superheat	Fuel Gas Superheat	3/8"	n/a	n/a	n/a	Sample QD		Needle Valve	NC	EG-4402		n/a	n/a	n/a	n/a	n/a
6	HV	596		Fuel Gas Humidification	Fuel Gas Humidification	3/8"	n/a	n/a	n/a	Sample		Hand Valve	NC	FG-2108		n/a	n/a	n/a	n/a	n/a
5	PCV	201		Fuel Gas desulfurization	Fuel Gas desulfurization	2"	n/a	n/a	n/a	12.5 psig		Diaphram Valve	NO	NG-2001		n/a	n/a	n/a	n/a	n/a
10	PCV	110		Process Water Recycle to Tank	Water Treatment System	1/2"	n/a	n/a	n/a	60 psig		Back Pressure Ctrl				n/a	n/a	n/a	n/a	n/a
10	PCV	550		CO2 Separator Overhead	CO2 Purification	3"	n/a	n/a	n/a	250 psig		Back Pressure Ctrl				n/a	n/a	n/a	n/a	n/a
5	PI	200	A	Fuel Gas desulfurization	Fuel Gas desulfurization	3"	n/a	n/a	n/a			Pressure Gauge		NG-2001		n/a	n/a	n/a	n/a	n/a
9	PRV	507		Caustic Scrubber	Caustic Scrubber	24"	n/a	n/a	n/a	1.9 psig		Pressure relief		FLG-4002		n/a	n/a	n/a	n/a	n/a
5	PSV	202	A	Fuel Gas desulfurization	Fuel Gas desulfurization	3"	n/a	n/a	n/a	14.9 psig		Pressure relief		NG-2021		n/a	n/a	n/a	n/a	n/a
5	SF	203	A	Fuel Gas desulfurization	Fuel Gas desulfurization	3"	n/a	n/a	n/a			Spectacle Flange		NG-2002		n/a	n/a	n/a	n/a	n/a
4	SP	101		Water Treatment System	Water Treatment System	1/2"	n/a	n/a	n/a			Vent		AIR-4111		n/a	n/a	n/a	n/a	n/a
8	XJ	202		Fuel Gas Superheat	Fuel Gas Superheat	10"	n/a	n/a	n/a			Expansion joint		FG-2111		n/a	n/a	n/a	n/a	n/a
19	XV	501		Internal Valve	Regenerative Gas Dryer						Data	n/a	E I/P	500-SP-507A		x	x	x	Profinet	192.168.254.100