INL/CON-17-43133-Revision-0

Design of a Sensible Heat Peaking Unit for Small Modular Reactors

Shannon M. Bragg-Sitton, Konor Frick, J. Michael Doster

November 2017

The INL is a U.S. Department of Energy National Laboratory
operated by Battelle Energy Alliance

INL/CON-17-43133-Revision-0

Design of a Sensible Heat Peaking Unit for Small Modular Reactors

Shannon M. Bragg-Sitton, Konor Frick, J. Michael Doster

November 2017

Idaho National Laboratory
Idaho Falls, Idaho 83415

http://www.inl.gov

Prepared for the
U.S. Department of Energy
Office of Nuclear Energy
Under DOE Idaho Operations Office
Contract DE-AC07-05ID14517

Design of a Sensible Heat Peaking Unit for Small Modular Reactors

Konor Frick*, J. Michael Doster*, Shannon M. Bragg-Sitton†

*Department of Nuclear Engineering, North Carolina State University, 2500 Stinson Drive, 3105 Burlington Engineering Labs, Raleigh, NC, 27695-7909, klfrick2@ncsu.edu, doster@ncsu.edu

† Nuclear Science and Technology, Idaho National Laboratory, Shannon.Bragg-Sitton@inl.gov

INTRODUCTION

Thermal Energy Storage (TES) has been proposed as a load management strategy for Small Modular Reactors (SMRs) deployed on constrained grids and/or hybrid energy systems [1] The three main types of thermal energy storage are sensible heat storage, latent heat storage, and thermochemical storage. Sensible heat storage is the most commercially mature technology [2]. In sensible heat storage, there are two modes of operation: charging and discharging. For a two tank, sensible heat TES System, charging involves taking cold TES fluid from a cold tank, heating it and storing it in a hot tank for later use. Discharge involves taking the hot TES fluid from the hot tank, making use of the heat in some manner, and returning the TES fluid back to the cold tank. The theory, control strategies, and results for operating a two-tank sensible heat storage system in charging mode has been reported previously [3]. In this paper, we examine operation of the TES system in discharge mode as a peaking unit.

SENSIBLE HEAT STORAGE SYSTEM

The proposed sensible heat Thermal Energy Storage System is shown in Figure 1. An outer loop interfaces with the reactor's Balance of Plant (BOP) directly through four parallel auxiliary turbine bypass valves (TBV) connected at the pressure equalization header. Bypass steam is directed through an intermediate heat exchanger (IHX) and discharged to the main condenser. An inner loop containing a TES fluid consists of two large storage tanks along with several pumps to transport the TES fluid between the tanks, the IHX and a steam generator.

The TES system is designed to allow the reactor to run continuously at ~ 100% power, storing the excess power during times of low demand and operating the TES system as a peaking unit during periods of high demand. During periods of excess capacity, steam is directed through the auxiliary bypass valves where it condenses on the shell side of the IHX. TES fluid is pumped from the Cold Tank to the Hot Tank through the tube side of the IHX at a rate sufficient to raise the temperature of the TES fluid to a reference set point value. Condensate is collected in a hot well below the IHX and drains back to the main condenser through an auxiliary control valve (ACV). Conversely, the system is discharged during times of high turbine demand by pumping TES fluid from the Hot Tank to the Cold Tank through the tube side of a Once Through Steam Generator (OTSG) producing a saturated liquid-vapor mixture. This two-phase mixture flows into a steam dome where it is separated into the gas and liquid phases. The saturated steam is then reintroduced into the power conversion cycle at the high-pressure turbine exhaust, prior to entering the moisture separator/reheaters. A nitrogen cover gas dictates the tank pressures during charging and discharging operation.

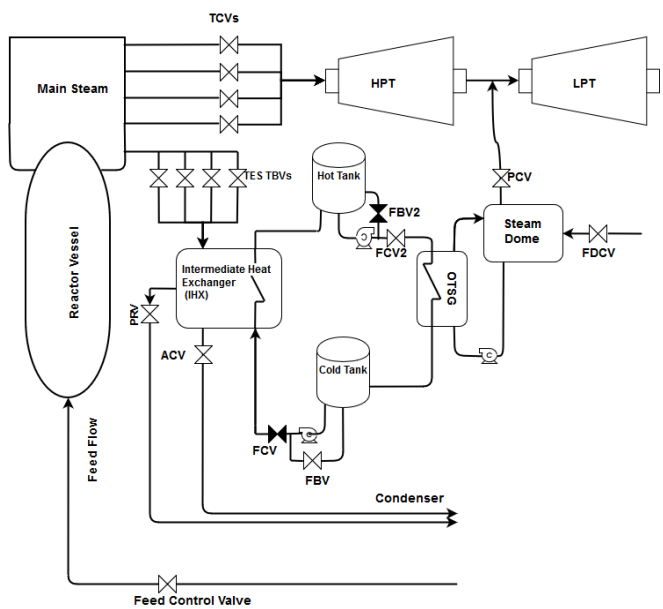

Figure 1: Schematic of an IPWR connected to a two-tank sensible heat thermal energy storage system, discharge mode

Steam Generator/Steam Dome Model and Discretization

A three equation Global Compressibility Model is assumed for the shell side of the steam generator, where thermodynamic equilibrium is assumed between the phases. The steam dome model assumes the vapor region is saturated and the liquid region is subcooled. It is currently assumed a pump will be used to provide a constant flow rate between the liquid region of the steam dome and the steam

generator inlet. This can be changed later to eliminate the pump and allow for natural circulation to drive the steam generator flow if desired. The tube side equations are similar to those for charging mode operation presented in previous work [3].

OTSG (Shell Side) Equation Set

Mass

$$V_j\left\{\frac{\rho_j^{t+\Delta t}-\rho_j^t}{\Delta t}\right\}+\rho_{j+1/2}^t v_{j+1/2}^{t+\Delta t}A_{j+1/2}-\rho_{j-1/2}^t v_{j-1/2}^{t+\Delta t}A_{j-1/2}=0 \quad (1)$$

Energy

$$V_j\left\{\frac{\rho u_j^{t+\Delta t}-\rho u_j^t}{\Delta t}\right\}+\rho u_{j+1/2}^t v_{j+1/2}^{t+\Delta t}A_{j+1/2}-\rho u_{j-1/2}^t v_{j-1/2}^{t+\Delta t}A_{j-1/2}$$
$$=-P^t\left\{v_{j+1/2}^{t+\Delta t}A_{j+1/2}-v_{j-1/2}^{t+\Delta t}A_{j-1/2}\right\}+q_j^t \quad (2)$$
$$-\left\{\frac{\alpha_l\alpha_g\rho_f\rho_g}{\rho}\left(u_{fg}+P_{SG}v_{fg}\right)v_rA_{xSG}\right\}_{j-1/2}^{j+1/2,t}$$

State Equations

$$\rho=\rho_l(u_l,P) \quad \text{or} \quad \rho=\alpha_l\rho_l+\alpha_g\rho_g \quad (3)$$

$$\rho u=\rho(u_l,P)u_l \quad \text{or} \quad \rho u=\alpha_l\rho_l u_l+\alpha_g\rho_g u_g \quad (4)$$

Steam Dome Equation Set

Liquid Mass

$$V_{SD}\left\{\frac{\alpha_l\rho_l^{t+\Delta t}-\alpha_l\rho_l^t}{\Delta t}\right\}=\rho_{FD}^t v_{FD}^{t+\Delta t}A_{FD}+\alpha_{lSG}^t\rho_f^t v_{SG}^{t+\Delta t}A_{xSG}$$
$$-\rho_{lSD}^t v_{FCV}^{t+\Delta t}A_{FCV}-\left.\frac{\alpha_l\alpha_g\rho_f\rho_g v_r}{\rho}\right|_{SG}^t A_{xSG} \quad (5)$$

Total Mass

$$V_{SD}\left\{\frac{\rho_{SD}^{t+\Delta t}-\rho_{SD}^t}{\Delta t}\right\}=\rho_{FD}^t v_{FD}^{t+\Delta t}A_{FD}+\rho_{SG}^t v_{SG}^{t+\Delta t}A_{xSG}$$
$$-\rho_{lSD}^t v_{FCV}^{t+\Delta t}A_{FCV}-\rho_g^t v_g^{t+\Delta t}A_{Steamline} \quad (6)$$

Total Energy

$$V_{SD}\left\{\frac{\rho u_{SD}^{t+\Delta t}-\rho u_{SD}^t}{\Delta t}\right\}=\left(\rho_{FD}u_{FD}+P_{SD}\right)^t v_{FD}^{t+\Delta t}A_{FD}$$
$$+\left(\rho u_{SG}+P_{SD}\right)^t v_{SG}^{t+\Delta t}A_{xSG}-\left(\rho_l u_{lSD}+P_{SD}\right)^t v_{FCV}^{t+\Delta t}A_{FCV}$$
$$-\left(\rho_g u_g+P_{SD}\right)^t v_g^{t+\Delta t}A_{Steamline} \quad (7)$$
$$+\left\{\frac{\alpha_l\alpha_g\rho_f\rho_g}{\rho}\left(u_{fg}+P_{SD}v_{fg}\right)^t v_rA_{xSG}\right\}_{SG}^t$$

State Equations

$$\left(\alpha_l\rho_l\right)_{SD}=\alpha_{lSD}\rho_l(u_{lSD},P_{SD}) \quad (8)$$

$$\rho_{SD}=\alpha_l\rho_l(u_{lSD},P_{SD})+\alpha_g\rho_g(P_{SD}) \quad (9)$$

$$\rho u_{SD}=\alpha_l\rho_l(u_{lSD},P_{SD})u_{lSD}+\alpha_g\rho_g(P_{SD})u_g \quad (10)$$

Momentum Equations

$$P_{SD}^{t+\Delta t}+\Delta P_{pFCV}=P_{SG}^{t+\Delta t}+\rho_{lSD}^t\left(K_{FCVLine}\right)\frac{\left(v_{FCV}^{t+\Delta t}\right)^2}{2} \quad (11)$$

$$P_{SD}^{t+\Delta t}=P_{LPT}^{t+\Delta t}+\rho_{lSD}^t\left(K_{PCV}^t+K_{PCVLine}\right)\frac{\left(v_g^{t+\Delta t}\right)^2}{2} \quad (12)$$

$$P_{cond}+\Delta P_{pFD}=P_{SD}^{t+\Delta t}+\rho_{lcond}^t\left(K_{FDCV}^t+K_{FDCVLine}\right)\frac{\left(v_{FD}^{t+\Delta t}\right)^2}{2} \quad (13)$$

$$P_{SG}^{t+\Delta t}=P_{SD}^{t+\Delta t}+\rho_{SG}^t\left(K_{SG}\right)\frac{\left(v_{SG}^{t+\Delta t}\right)^2}{2} \quad (14)$$

Note: Nomenclature for equations can be found at the end of the paper.

These equations are nonlinear in the new time values. Using a Newton-Iteration scheme, equations (1)-(14) can be reduced to a (n+2) by (n+2) matrix providing solutions for the new iterate (k+1) values $v_{FCV}^{k+1}, v_{1+1/2,\ldots,}^{k+1} v_{j+1/2}^{k+1}$, $v_{SG}^{k+1}, P_{SG}^{k+1}, P_{SD}^{k+1}$ where n is the number of steam generator nodes. The remaining new iterate values can be obtained directly by back substitution. The equations are iterated to convergence based on the maximum relative difference for any single variable between iterations. The converged values become the solution for the new time values.

Discharge System Control

The discharge system has three sets of valves: a Pressure Control Valve (PCV) on the steam dome to ensure constant pressure steam conditions in the steam dome, a Feed Control Valve to allow for level control within the steam dome, and a Flow Control Valve on the tube side of the

OTSG to regulate the amount of TES flow from the hot tank to the cold tank. Feed control is based on a standard three-element controller where the error signals are level and steam flow/feed flow mismatch. The TES flow control assumes the required TES flow is proportional to relative demand plus a correction term (shim). The shim term modifies the demand signal such that the instantaneous electric load is met.

$$Signal_{FCV2} = \frac{\dot{m}_{TES2demand} - \dot{m}_{TES}}{m_{TES2ref}} \tag{15}$$

$$\dot{m}_{TES2demand} = \dot{m}_{TES2ref}\left(\frac{\dot{W}_{\text{target}}}{\dot{W}_{\text{Peaking}_{Max}}}\right) + \dot{m}_{TES_{shim}} \tag{16}$$

$$\dot{m}_{TES_{shim}}^{t+\Delta t} = \dot{m}_{TES_{shim}}^{t} + \frac{K_{TES_{Shim}}\dot{m}_{TES_{ref}}\left(\dot{W}_{\text{target}} - \dot{W}_{\text{discharge}}\right)\Delta t}{\dot{W}_{\text{Peaking}_{Max}}} \tag{17}$$

During times of discharge the reactor power is held constant by changing the feed demand on the main system feed control valve that modulates flow through the main steam generator.

$$Feed_{demand} = Flow_{SG_{\text{Nominal}}} + Feed_{Shim}$$

$$Feed_{Shim}^{t+\Delta t} = Feed_{Shim}^{t} + \frac{K_{Shim}Flow_{SG_{\text{Nominal}}}\left(Q_{\text{Ref}} - Q_{th}\right)\Delta t}{Q_{\text{Ref}}} \tag{18}$$

This modification allows the reactor to remain at approximately 100 percent power while the TES system matches the demand of the turbine.

Results

Results are presented for a system designed to charge 52.5% and discharge 47.5% of a typical summer day. The TES system has a maximum peaking unit capacity of 25% of the turbine output associated with 100% reactor power.

Table 1: TES discharge system design parameters

Parameter	**Value**
TES Fluid	Therminol-66
Nominal Turbine Output	180 MWe
Maximum Peaking Output	36 MWe
Steam Dome Volume	6000 ft^3
Steam Dome Reference Pressure	200 psia
BOP Reintroduction Pressure	175 psia
OTSG Volume	30 ft
Number of tubes	32761
Tube Inner Diameter	0.044 ft
Tube Outer Diameter	0.058 ft
Hot Tank Volume	8,000,000 ft^3
Cold Tank Volume	8,000,000 ft^3

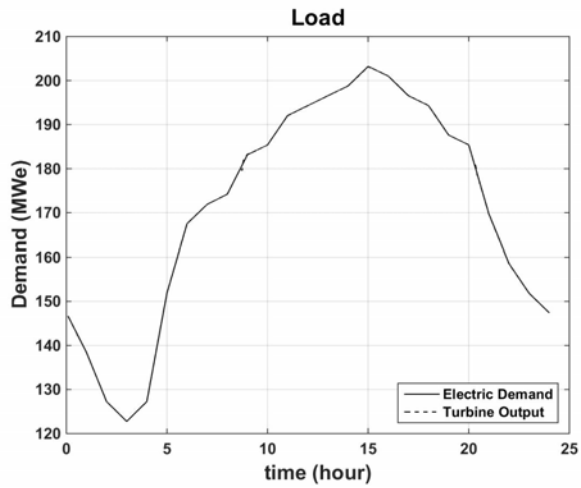

Figure 2: Electric Demand and Turbine Output

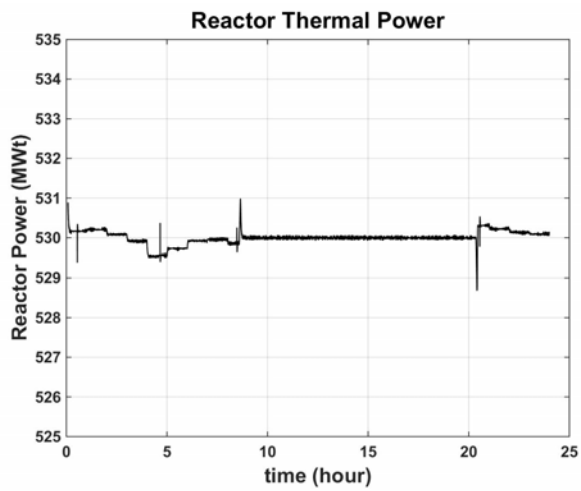

Figure 3: Reactor Thermal Output

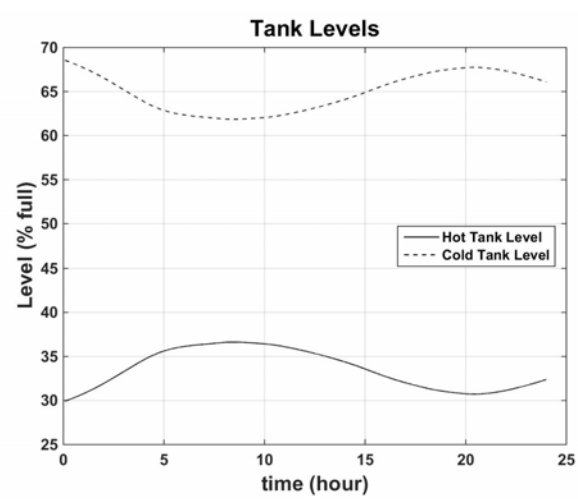

Figure 4: Tank Levels for the Hot and Cold Tanks

Over the simulation period, demand varies from 122 MWe to 202 MWe. As illustrated in Figures 2 and 3, with the inclusion of sensible heat thermal energy storage the system can meet demand while simultaneously keeping reactor power at approximately 100%. Tank levels oscillate about a 5% capacity band as shown in Figure 4. It should be noted that tank sizes are relative to needs and can be sized accordingly.

CONCLUSIONS

These results demonstrate the feasibility of using TES systems as peaking units when coupled to Small Modular Reactors. Thermal energy can be stored during periods of low demand, and recovered later in the day when load demands increase. Such systems allow for a combined reactor/TES system where loads exceed normal reactor capacity and reduce the need for fossil fuel peaking units. This deployment strategy increases the capacity factor and economic benefit of the reactor.

NOMENCLATURE

α	void fraction
A	area
ACV	auxiliary control valve
BOP	balance of plant
FBV	feed bypass valve
FDCV	feed control valve
FCV	flow control valve
HPT	high pressure turbine
IHX	intermediate heat exchanger
IPWR	integral pressurized water reactor
K	loss coefficient
LPT	low pressure turbine
$\dot{m}$	mass
MWe	megawatts electric
MWt	megawatts thermal
OTSG	once through steam generator
P	pressure
ρ	density
PCV	pressure control valve
PRV	pressure relief valve
ΔP	pressure drop
$\dot{Q}$	heat transfer rate
SMR	small modular reactor
Δt	change in time
t	time
TBV	turbine bypass valve
TES	thermal energy storage
u	internal energy
v	velocity
ν	specific volume
V	volume
$\dot{W}$	Work

Subscripts

cond	condenser
f	saturated liquid
fg	range between saturated liquid and vapor
g	saturated vapor
HDR	header
IHX	intermediate heat exchanger
j	node “j”
l	liquid phase
Line	losses in lines
p	pump
ref	reference
r	relative
SD	steam dome
SG	steam generator
TES	thermal energy storage
x	cross sectional area

REFERENCES

1. S. BRAGG-SITTON, R. BOARDMAN, J. COLLINS, M. RUTH, O. ZINAMAN, C. FORSBERG. “Integrated Nuclear-Renewable Energy Systems: Foundational Workshop Report”. Idaho National Laboratory, INL/EXT-14-32857 Rev. 1 (2014).

2. S. KURAVI, J. TRAHAN, D. Y. GOSWAMI, M. RAHMAN and E. STEFANAKOS, "Thermal energy storage technologies and systems for concentrating solar power," Progress in Energy and Combustion Science, vol. 39, pp. 285-319, 2013.

3. K. FRICK, Coupling and Design of a Thermal Energy Storage System for Small Modular Reactors, Masters of Science Thesis, Department of Nuclear Engineering, North Carolina State University, 2016.

Support acknowledged from the DOE-NE IUP Fellowship program through the NEUP Office.