14th International Conference on Greenhouse Gas Control Technologies, GHGT-14

21st -25th October 2018, Melbourne, Australia

Enabling Coal Technology with Carbon Capture for Future Markets with Flameless Pressurized Oxy-Combustion

Joshua Schmitt[a]* Peter Reineck[b] Massimo Malavasi[c]

[a]*Southwest Research Institute, 6220 Culebra Rd., San Antonio, TX, 78238, USA*
[b] *Peter Reineck Associates, 77 Beech Grove, York YO26 5JY, UK*
[c]*ITEA, S.p.a, Via Milano km 1,600, 70023 Gioia del Colle, ITALY*

Abstract

Future markets for power are expected to require more load following power plants, which reduces output during the night and early morning. This is when the demand for electricity is the lowest, so plants must respond rapidly at any time to peak loads resulting from the variable output of wind and solar power. A coal power plant based on Flameless Pressurized Oxy-combustion (FPO) can go from 5% to 100% of capacity rate in less than 30 minutes in response to fluctuating demand, operating at capacity when power prices are highest. FPO is a proven oxy-combustion technology that was developed to recover energy from low ranking coal, other brown fuels and wastes. ITEA began developing FPO in 2003 on a 5-MWth pilot in Gioia del Colle, Italy, to destroy hazardous industrial waste and as such, design objectives were very high combustion efficiencies and capture of metals in the fuel in the vitreous slag. The technology was subsequently deployed in 2009 at the 15-MWth scale at the Jurong Island petrochemical cluster in Singapore for waste incineration.

FPO is an oxy-combustion process whereby oxygen is separated from the air, and it is used in combustion with recirculated flue gas to maintain combustion temperatures at acceptable levels. The resultant flue gas is primarily CO_2 and water, which allows for a relatively simple and cheap CO_2 capture process. This is in contrast to air-combustion systems which require a complex and costly post-combustion capture (PCC) process. Coal is fed to the combustor slurried in water, and the combustor operates at elevated pressure (approximately 12 bar) which improves the overall efficiency and reduces the size and cost of the combustor. Notably, the FPO cycle maintains high efficiency by recovering most of the heat of vaporisation of the contained water. The combustor is designed to coalesce the molten ash particles so that they settle to the chamber walls and drain to the outlet, significantly reducing the particulate content in the exhaust gas and allowing the use of coals with up to 40% alkaline ash content.

FPO is a low-emission technology: zero thermal NOx minimises overall NOx; any organic nitrogen is converted to elemental nitrogen (N_2). Total organic content (TOC) at combustor exit is hundreds of times lower than for traditional combustion processes, with dioxin and furans close to zero. Work commenced on a DOE funded pilot demonstration project in October 2016 to provide the design for a 50-MWth FPO pilot plant that can fire a wide range of high-to-low rank coals. The project will

* Corresponding author. Tel.: +1-210-522-6777.
E-mail address: joshua.schmitt@swri.org

investigate updating and improving the cycle for power generation with CO_2 capture by incorporating a turbo-expander with a principal steam power island that utilizes a heat recovery steam generator, increasing the overall efficiency of the cycle. A cost study is also performed on the updated FPO design as part of the project. The FPO pilot plant built based on the design will then be demonstrated over a 3-year test program to generate data for the design of a commercial-scale 500 MWth firing module commercial power plant with integral carbon capture and sequestration (CCS), which could start construction in 2025.

A discussion of the levelized cost of electricity (LCOE) of various cases are presented, including a comparison of established supercritical with PCC (SCPC) technologies with FPO fitted with CO_2 compression and liquefaction, and FPO ready for carbon capture and sequestration (CCS-ready). This would enable CO_2 capture for use in enhanced oil recovery (EOR) or sequestration when market conditions make it attractive to do so. In addition, a comparison of LCOE of FPO and conventional processes for firing low-ranking coals with high water and ash content will be provided.

Keywords: coal; pressurized oxy-combustion; carbon capture and storage; flameless combustion

1. Introduction

This study discusses the technology advancements of FPO. FPO is an oxy-combustion technology that accepts a wide range of fuels qualities and is able to provide an efficient conversion into electricity, even for low quality fuels. The gas stream leaving the heat recovery system is primarily CO_2 and water. The water can be condensed out of the system, providing further heat recovery and a highly pure CO_2 stream that is ready for CCS. FPO technology has been the subject of development for ITEA for more than 15 years. This study will discuss the technological and economic benefits of FPO through pilot development and commercial demonstration.

2. FPO development background

Prior to the beginning of the 50 MWth pilot development project, ITEA had developed their technology at the laboratory and small scale.

2.1. Laboratory tests

A laboratory-scale pilot of Flameless Pressurized Oxy-combustion (FPO) was designed for blank (no combustion) ash melting kinetic experimental testing. It was installed at the University of Bologna Industrial Chemistry Faculty labs. An analytical labs consortium of the Engineering and Industrial Chemistry faculties performed characterizations.

In total, 392 test hours for coal additives were recorded. It should be noted that these tests are qualitatively meaningful, but they were not completely congruent to the 5 MWth pilot because of shorter residence time and lower pressure. However, lab pilot parameter trends were shown to be in line with experienced behavior at the 5 MWth pilot; moreover, the differences are stable and amplified, which facilitated the reading of measured values.

For example, the results of the high iron oxide tests in were used for the ADARO coal (25% Iron III in ash) trial on the 5 MWth pilot. The additives demonstrated the capability to bring 200 mg/Nm3 flue gas (peaks at 300) down to around 60 mg/Nm3. This restored slagging efficiency to >99.9% and eliminated any ash accumulation in pipe bends and dead ends.

Additive validation included a preliminary static melting test onto crucible with a temperature ramp of the oven. This test assessed potential deviation from FACT-SAGE physical-chemical model predictions. The better-performing solutions were then designed for continuous flow once-through lab reactor dynamic tests and for the estimate of possible capture-from-gas kinetic impediments. The flue gas was characterized with scanning electron microscope (SEM) and energy dispersive x-ray (EDX) methods.

2.2. Small pilot testing

FPO was originally conceived for the treatment of hazardous industrial wastes. It was reasoned that the benefit of reduced emissions could offset the cost of oxygen. Conceptual design of this 5 MWth pilot, erected in 2003, was based on the theoretical prediction that a suitable combustion parameter combination could achieve a uniform, flameless condition with a substantial emissions reduction. The layout of the small pilot is shown in block diagram form in Figure 1. Research and development was conducted in parallel to the 5 MWth pilot in a laboratory pilot at atmospheric pressure.

By 2004, apparent emission results of the 5 MWth pilot suggested that the ambitious goal of flameless condition was attained not only with gas and vaporizable liquid feedings, but also with non-vaporizable liquid and solid granular feedings.

The FPO pilot achieved excellent emissions reduction versus permit values. It was able to convert quantitatively all combustible species, producing zero soot. HPA Dioxin Furan was close to the lower detection limit (1,000 to 10,000 times smaller). Carbon monoxide was 100 times lower than typical values. Zero thermal NOx was generated and NOx from organic nitrogen was reduced. Ashes melted, coalesced, and separated from flue gas inside the combustor; the waste collected at the combustor bottom as zero-carbon, vitrified, non-leaching (neither organics, nor heavy metals) slag. Flue gas post-treatment operations reduced to the neutralization of acidic components (halogen hydric acids, SO_2).

These results attracted the attention of ENEL, the European utility co-leader. After a preliminary trial with coal, ENEL decided to consider FPO for their "near zero" emissions, coal-fired power development program. They supported the refurbishment/adaption of the 5 MWth ITEA pilot to coal firing. The launch of a three-year technology development program (2007-2009) extended to different types of coals of use in its fleet and some low rank solid fuels.

In autumn 2006, ENEL and ITEA decided to perform further coal-firing developments in the 5 MWth pilot. An analysis uncovered some bottlenecks; for example, the manual handling of vitrified slag discharge system at 3-4 times the original design quantity. More robust solutions were deemed necessary for the boiler (hot flue gas from 500°C to 800°C) and the molten slag discharge port (design temperature from 1,300°C to 1,450°C). The slurry pump was modified to process pressure similar to progressive cavity pumps.

After four trials in 2007, the unit was overhauled and improvements were engineered and implemented. This included the installation of wet-milling equipment, a ball mill, and a bar mill to alleviate numerous inconveniences associated with the supply of the already ground material. All modifications went on-stream in July 2008.

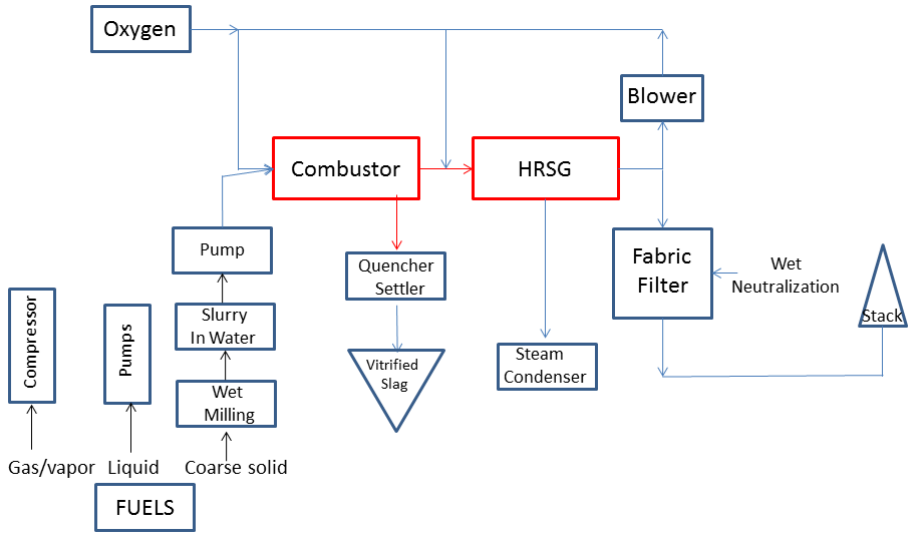

Figure 1. 5 MWth Small Pilot Block Flow Diagram

Experimental runs demonstrated that the production of relatively clean flue gas from the combustor outlet could allow the operation of a compact pressurized flue gas boiler. Because no soot blower is required, the flue gas exiting the steam generator could be recycled for combustor and pre-boiler tempering. No significant fouling by sulfate, erosion, or acid dew was ever detected during and after firing runs.

Material and thermal balance data were collected and heat recovery efficiency was demonstrated. ENEL received the support of Dr. Ahmed Ghoniem from the Massachusetts Institute of Technology (MIT) for process analysis and the elaboration of overall carbon capture and storage cycle efficiency and economic projections. The results of this analysis set FPO high among competitors, both for efficiency and levelized cost of electricity (LCOE).

Scale-up rules were analyzed and a suitable combustor was designed to respond to major scale-up problems. A combustor numerical model by Politecnico Bari at ENEL R&D was tuned with experimental data from the once-through 5 MWth combustor. In 2009, the numerical model was applied for the initial design of a promising combustor setup where flow entered and exited from the same side. This model was conceived for a 50 MWth large pilot, which was to be installed in the Brindisi industrial coal-fired power station. ITEA developed the combustor concept and detailed the mechanical design to the proposed Brindisi large pilot. Extended validation for flue gas cleanliness allowed for a much more efficient supercritical once-through steam generator design.

In parallel to coal testing, numerous different applications were explored with the support of different industry leaders. Applications for power from oil heavies and oil residues treatment, power from high CO2 gas, industrial and pharmaceutical waste treatment, and municipal waste-to-product treatment have been experimentally demonstrated on the 5 MWth pilot. ITEA demonstrated some of these on an industrial 15 MWth-scale plant in Singapore.

Comprehensively, ITEA collected about 18,000 firing hours on the 5 MWth FPO pilot. ITEA has filed 10 international patent applications, some already granted, on this technology.

3. Pilot demonstration development

The previous work on coal firings in the 5 MWth pilot led to a development effort on a 50 MWth large pilot. A model of the 50 MWth pilot was developed in Aspen Plus. The coal used as design coal for the pilot model was the NETL low-sulfur PRB coal. FPO was proven to operate efficiently on low quality coals, opening up the design to coals with high moisture content for a reduced operating cost. The coal specification is shown in Figure 2.

Coal name	PRB
Coal seam nomenclature	Wyodak/Anderson
Mine	Rochelle Coal Co.
ASTM D388 Rank	Subbituminous C

Proximate Analysis[5]	**As-Received**	**Dry**
Moisture	27.42%	0.00%
Volatile Matter	31.65%	43.61%
Ash	4.50%	6.20%
Fixed Carbon	36.43%	50.19%
Total	100.00%	100.00%

Ultimate Analysis[5]	**As-Received**	**Dry**
Carbon	50.23%	69.21%
Hydrogen	3.41%	4.70%
Nitrogen	0.65%	0.89%
Sulfur	0.22%	0.30%
Chlorine	0.02%	0.03%
Ash	4.50%	6.20%
Moisture	27.42%	0.00%
Oxygen	13.55%	18.67%
Total	100.00%	100.00%

Heating Value[2,5]	**As-Received (Reported)**	**Dry (Dulong calc.)**
HHV (Btu/lb)	8,800	11,546
LHV (Btu/lb)	8,486	11,113
HHV (kJ/kg)	20,469	26,856
LHV (kJ/kg)	19,738	25,850

Figure 2. Design case coal specification from the NETL database [1]

Table 1. Performance results of the 50 MWth pilot for PRB

Performance Summary	
Total Gross Power MWe	24.03
Total Auxiliaries, MWe	7.06
Net Power, MWe	16.97
HHV Net Plant Efficiency, %	30.32
HHV Net Plant Heat Rate, kJ/kWh	11872
LHV Net Plant Efficiency, %	31.47
LHV Net Plant Heat Rate, kJ/kWh	11440
HHV Heat Duty Efficiency, %	90.21
LHV Heat Duty Efficiency, %	93.62
HHV Gross Cycle Efficiency, %	44.5
HHV Gross Heat Rate, kJ/kWh	8090
As-Received Coal Feed, kg/hr	10116
Limestone Feed, kg/hr	288
HHV Thermal Input, MWth	53.94
LHV Thermal Input, MWth	55.98

The plant layout in the basic 50 MWth pilot case has additional equipment beyond what is installed in the 5 MWth small pilot. The primary change is the addition of power producing equipment. A direct gas expander reduces the pressure from the firing loop and produces power and is fed by a hot and cold stream exiting the FPO recycle loop that is mixed to the design expander inlet temperature.

The steam produced by the once-through steam generator (OTSG) is provided to steam turbines. In addition, gas and recovered condensed water economizers preheat the water condensate entering the steam generator. The performance results from Aspen Plus are shown in Table 1. This plant, prior to estimated auxiliary parasitic losses, is able to produce electricity at 47.59% efficiency on a low quality coal. Once the parasitic losses are accounted for, the plant is able to achieve 31.47% efficiency relative to LHV.

3.1. Combined heat and power pilot

One potential site for the 50 MWth FPO Pilot can make use of the produced steam for district heating. Thus, the design of the plant is a combined heat and power (CHP) facility. The configuration of the CHP pilot is shown in block format in Figure 3.

This pilot would redirect any heat needed during the winter time from the LP steam turbine. This would reduce the power output of the cycle, but allow for the direct heating through the site district heating system. The configuration of the combustion loop and heat recovery train is similar to the basic 50 MWth pilot system. Figure 3 also shows the usages for auxiliary steam from the OTSG to run the combustion process, deaerator, and feedwater preheating. In addition, steam is extracted from the HP turbine to provide further feedwater preheating to the OTSG.

A unique feature of the CHP cycle is the tempering of steam flows to properly feed the district steam boiler. This tempering occurs at the inlet to the HP turbine and the inlet to the district heating boiler. This gives the cycle flexibility and control for a wide range of conditions depending on district heating load requirements.

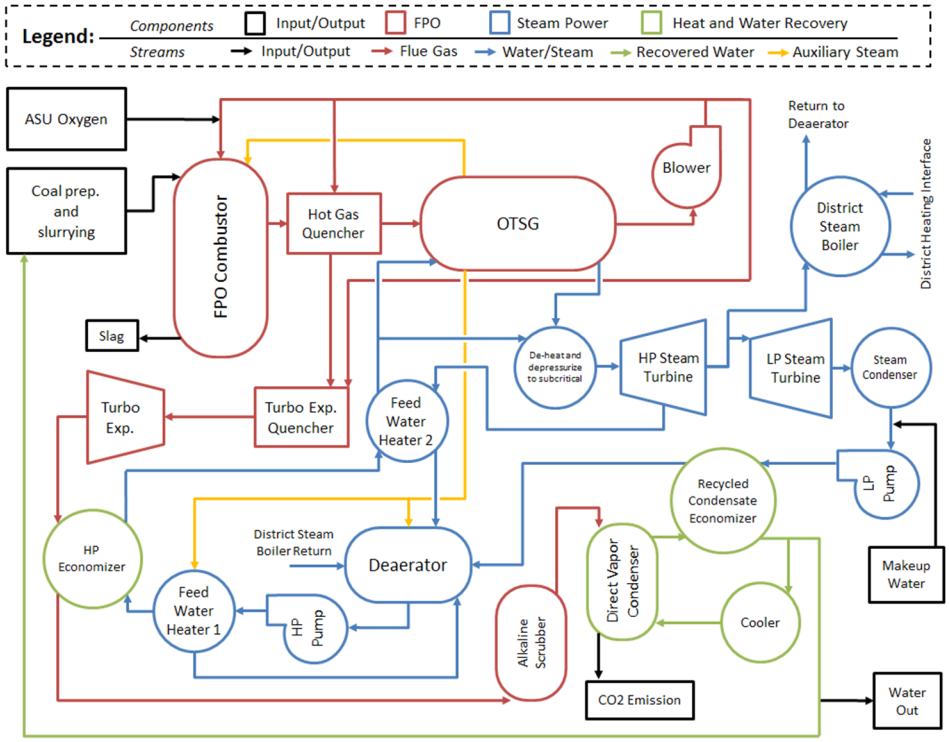

Figure 3. CHP pilot configuration block diagram

4. Commercial Scale LCOE

Development of the FPO process for a full commercial scale application has been ongoing. MIT Mechanical Engineering Department, under Dr. Gohniem, and the Energy Initiative reviewed pilot experimental results, analyzed peculiar technology phenomena, and developed theoretical projections both of cycle efficiency and of coal-fired cost of electricity (COE) and LCOE.

ENEL launched a detailed engineering study for a 350 MWe FPO CCS plant, located at Fusina (near Venice), with CO_2 sequestered in exhausted natural gas wells in the Adriatic Sea. The result is a two-year detailed engineering study of a 350 MWe net CCS comprehensive package, based on the FPO firing core, with the aim of generating solid data for technology competitive positioning. ITEA and AC Boiler (formerly Anslado Caldaie) contributed the design of non-conventional equipment and systems..

4.1. 350 MWe commercial case

The resulting engineered figures for FPO at the end of the MIT study [1] are discussed as a starting point for the commercial system analysis. Firing loop design was assigned to ITEA and AC Boiler and was designed according to ENEL specifications. In that study, more than 90% of equipment and systems based on vendor data and performance supported by guarantees. The study included an assumption of a very long train of operation (sequence of operational rigid sections), hot backup (double, triple backup) for any operation susceptible to cause unit block. The study would follow a more stringent integral emission limit prescription (given the location near Venice). For example: alkaline scrubbing liquor re-crystallization, 100% water recovery, CO2 recovery, sectioned-off gas SCR treatment to comply with gas concentration emission limits. A block diagram of the commercial system is shown in Figure 4.

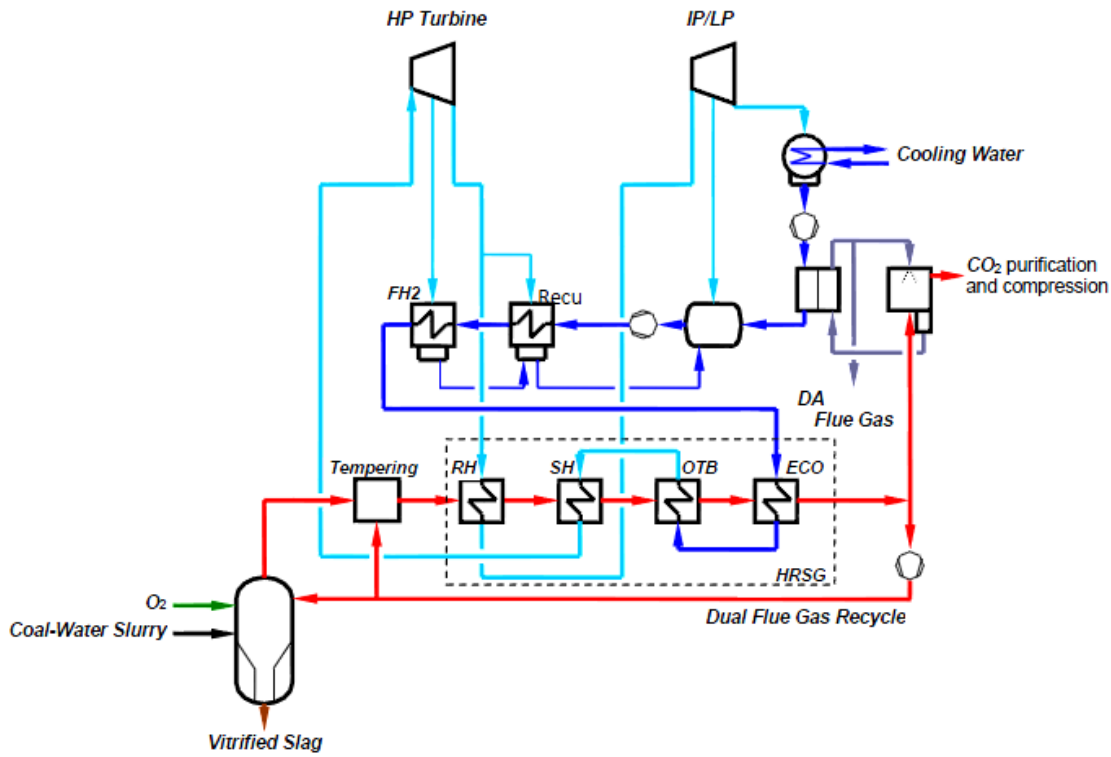

Figure 4. Block flow diagram of the 350 MW commercial system [2]

For the 350 MWe study, oxygen and the fuel slurry are combusted. The gas exiting the combustor is tempered with recycle gas before passing through a heat recovery steam generator (HRSG), which feeds a steam turbine. A portion of the gas leaving the HRSG is sent to the stack and the rest is pumped through the recycle loop. The recycle loop is split between the tempering quencher and reinsertion into the combustor. Slag is removed as waste, the flue gas stream is purified, and CO_2 is removed for compression and storage.

After the steam turbine, the flow is reheated before it enters the intermediate- and low-pressure turbine. The steam is then condensed by cooling water and pumped to the recuperator and economizer.

The study was completed at the end of 2012. It included efficiency and cost of electricity calculations. The efficiencies, heating values, coal flow rate, and energy balances in the study are shown in Table 2. Air emissions information, performance sensitivity, and carbon, sulfur, and water balances are not available for that study at this time.

For a commercial quote of the Air Separation Unit (ASU), Air Liquide introduced two different solutions. First, a traditional cryogenic plant with a parasitic power consumption of 0.24 kWh/kg O_2. Second, a new gaseous oxygen plant with a parasitic power consumption of 0.16 kWh/kg O_2. The new plant was quoted without guaranties because it will not be commercially available in 2015. ENEL Engineering chose the cryogenic plant for their calculation.

The Carbon Processing Unit (CPU) was quoted by Air Products, who presented two different solutions. The first was traditional CO_2 compression, liquefaction, and incondensable stripping, starting from pressurized CO_2 after an alkali scrubber. The second solution was a complete flue gas train treatment (particulate removal, SCR, soot removal, etc.) followed by compression and oxygen stripping.

Table 2. Power and heat balance for the 350 MWe case

	Unit	Value
Thermal input (LHV)	MWth	1,050
Thermal input (HHV)	MWth	1,081
Coal flow rate	tonne/hr	148.5
Heating value (LHV)	kJ/kg	25,456
Heating value (HHV)	kJ/kg	26,209
ST Power generated (gross)	MWe	500
Overall Auxiliary (parasitic) consumption	MWe	149
Air Separation Unit	MWe	82.5
Recycle fans, loop recirculation	MWe	10.4
Pumps Isotherm loop	MWe	1.4
Slurry system mills	MWe	3.0
Pumps for slurry handling	MWe	2.5
Auxiliary services	MWe	21.1
Pumps of CCCW CPU & ASU, and Flue gas treatment	MWe	4.6
CPU compressors and auxiliary	MWe	22.3
SEC	MWe	1.5
NET POWER	MWe	351
Net efficiency (LHV)	%	33.4%
Gross efficieny (LHV)	%	47.6%
Net efficiency (HHV)	%	32.4%
Gross efficiency (HHV)	%	46.2%

Only the second solution was supported by contractual guaranties. Thus, ENEL incorporated the second alternative, though it increased the capital expense by approximately 100 M€ more capital, and unfavorably impacted efficiency with higher parasitic power losses. The resulting figures for gross efficiency decrease and parasitic power consumptions for minor sections and ancillaries packages (excluding ASU and CPU) were also worse than preliminary projections.

The ENEL HRSG specification added significant cost to the commercial plant. It was quoted from AC Boiler and required the adoption of a vertical setup. Furthermore, it specified sufficient room for in-place water-steam bundles cleaning and tube banks package extraction for package replacements into the pressurized vessel. This brought each 425 MWth HRSG module to a capital cost of 43.5 M€.

ENEL specifications were understandable and, yet, represented a significant additional cost. A reduction of cost could be achieved with a OTSG, which more closely matches the flow requirements of the FPO loop. This technology will be proven in the proposed 50 MWth pilot plant. The capital expenditure and other costs of construction are shown in Table 3.

Table 3. Construction costs of the 350 MWe FPO plant

INVESTMENT COST		Millions of Euros (M€)	% TOTAL EXTERNAL	% GRAND TOTAL	€/kWe net
A	SUPPLY	1,044.9	90.5%	79.1%	2,977
A.1	Air Separation Unit	167	14.5%	12.6%	476
A.2	Slurry Production System	37.0	3.2%	2.8%	105
A.3	Isotherm loop	303.0	26.2%	22.9%	863
A.4	Power Train	70.0	6.1%	5.3%	199
A.5	Flue gas Treatment	9.25	0.8%	0.7%	26
A.6	Carbon Processing Unit	160	13.9%	12.1%	456
A.7	Feed water, miscellaneous systems	51.0	4.4%	3.9%	145
A.9	Electrical items	108.0	9.4%	8.2%	308
A.10	I&C items	14.5	1.3%	1.1%	41
A.11	Supply Contingencies	125	10.8%	9.5%	357
B	CONSTRUCTION	109.6	9.5%	8.3%	312
A+B	TOTAL EXTERNAL	1,155	100.0%	87.4%	3,289
C	CONTINGENCIES	48.79		3.7%	139
D	INTERNAL COSTS	118.2		8.9%	337
A+B+C+D	GRAND TOTAL	1,321.5		100.0%	3,765

Table 4 summarizes efficiency figures and capital cost figures for the ENEL study. These values were calculated by ENEL according to generally accepted DOE-NETL recommendations. This included operational costs, but project operation and maintenance cost breakdowns are not available at this time. A summary table, Table 4, is provided that includes the overall LCOE of the 350 MWe commercialized plant.

Table 4. 350 MWe economic parameters

Parameter	unit	
Power In	MWth LHV	1,050
Gross Power	MWe	500
Net Power	MWe	351
Efficiency	% LHV	33.4
Capital	M€	1,321
CAPEX	€/kWe net	3,763
LCOE	€/MWh	126

4.2. 550 MWe commercial case

The 350 MWe plant was scaled to a 550 MWe capacity plant using proprietary ITEA scale-up coefficients per element. The latest ITEA cost estimates were used and an exchange rate of 1.12 $/€ was applied to convert Italian costs to United States Dollars. This was directly compared to data made available by National Energy Technology Laboratory (NETL) baseline studies. The major pieces of equipment and flows for a 500 MWth commercial case are shown in Figure 5.

The commercial case includes one stage of reheat. This is to match the single reheat stage in the NETL base case, but two stages of reheat are certainly possible with the OTSG. The primary power producing element is the steam turbine train, which produces approximately 4 times the power of the flue gas turbo-expander.

The ASU for the commercial case has been selected to be a cryogenic gaseous oxygen type (GOX). The baseline coal for the first set of comparisons is a US bituminous coal with a LHV of 27,100 kJ/kg and <1% of sulfur content. One of the primary benefits of FPO is the cost reduction of CO_2 recovery with a simplified equipment train. Since the CO_2 leaves the process already >90% pure, compression with some minor water removal and further boosting to pipeline pressure is all that is needed to provide pipeline-grade CO_2.

The case shown in Figure 5 is a 500 MWth input. This is just below the maximum size that ITEA estimates is economically feasible at the commercial scale. Figure 6 demonstrates how a 500 MWe plant could be achieved (1500 MWth input). The FPO combustor loops are combined to a single power island, heat recovery, gas cleanup, and CO_2 compression system. This allows the system to benefit from cost reduction of scale-up of standard pieces of equipment will maintaining high efficiency reasonable costs for the FPO system.

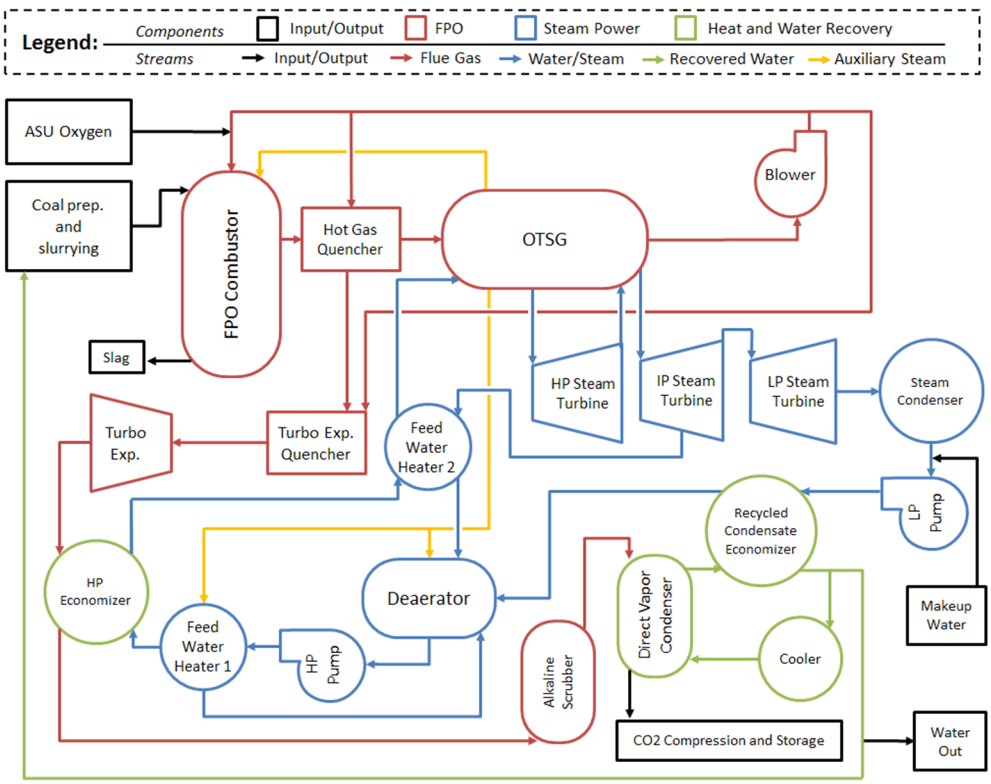

Figure 5. Block diagram for the 500 MWth FPO case

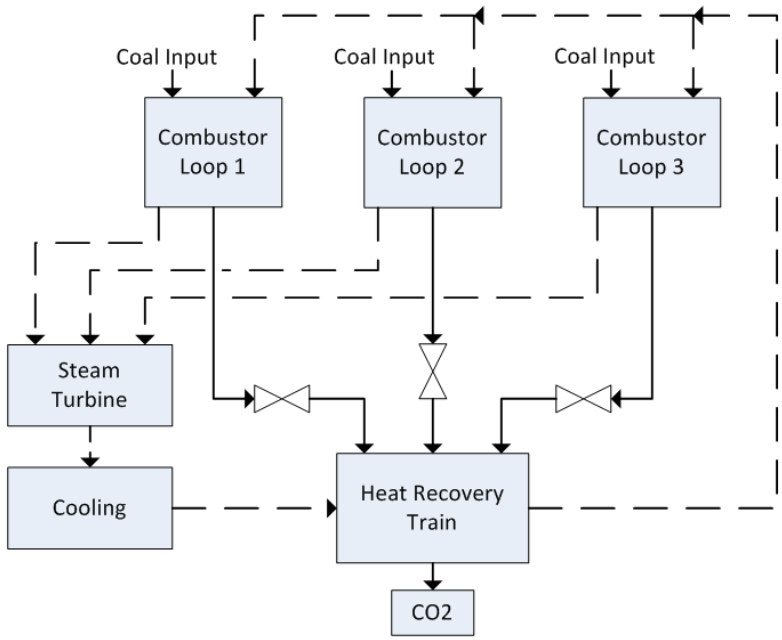

Figure 6. Modular approach to achieving a 500MWe commercial plant

Table 5 outlines the ITEA estimates of the bituminous coal commercial FPO plant costs and comparison to the NETL baseline. In the demonstrated cases, the FPO plant with integrated carbon capture and sequestration (I-CCS) is very close to the NETL baseline that does not include CCS. The LCOE improvements in this case represent the work of ITEA to improve their costs since the 350 MWe ENEL study. The SCPC technology with a PCC train is significantly underperforming compared to the FPO case and the SCPC case with no CCS.

Another potential application for FPO is retrofit to an existing 550 MWe coal power plant. Existing plant infrastructure and power island would be used to interface with the FPO system. A system representation of this concept is shown in Figure 7.

Table 5. ITEA's latest estimates on the efficiency of FPO with integrated carbon capture

Parameter	Unit	SCPC no CCS Base Line	Post CC SCPC + MEA	ITEA FPO / Integral CCS (LE)
Power in LHV	MWth	1,345	1,880	1,410
Gross Power	MWe	580	661	695
Parasitic Power	MWe	30	111	145
Net Power	MWe	550	550	550
Efficiency	% LHV	40.9%	29.3%	39.0%
Capital	$M	869	1,571	1,322
CAPEX	$/kWe	1,579	2,856	2,369
LCOE	$/MWh	68	118	79
LCOE compared to Base Line			175%	116%

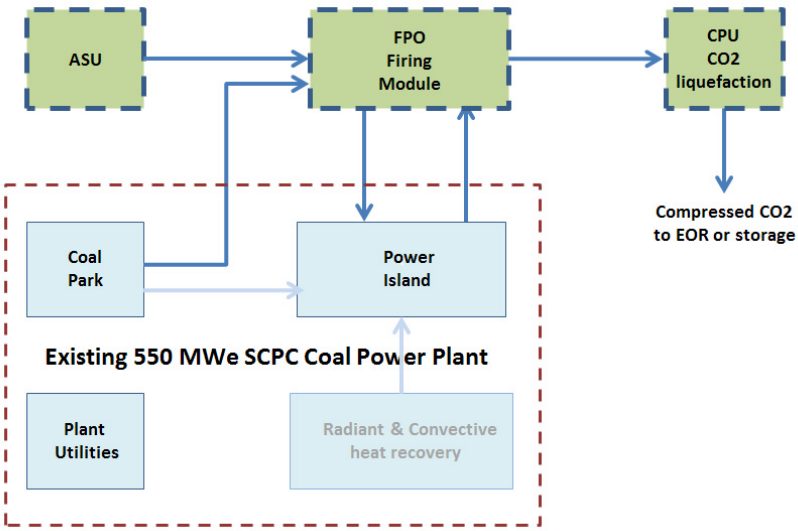

Figure 7. Retrofit configuration for an FPO commercial plant

The capital cost reduction of retrofitting the SCPC plant with FPO provides improved cost metrics and LCOE. Furthermore, using a lower quality coal, such as PRB can further reduce operating costs. PRB coal specification used for this estimate is shown in Figure 2. The performance and cost metrics for different coals are shown in Table 6. The table also highlights the difference in cost and LCOE between a new build and a retrofit.

Since FPO can provide high quality of CO_2, the cost of operating can be further reduced by selling CO_2 to a pipeline for EOR or other uses. Future studies will show how with the additional cost of a pipeline connection, CO_2 revenue can significantly improve plant cost and reduce the LCOE.

Table 6. Performance and cost of FPO with carbon capture for two coals in the new build and retrofit scenarios

Parameter	Unit	SCPC no CCS Base Line	ITEA FPO SC / I-CCS Bituminous Coal	ITEA FPO SC / I-CCS PRB Coal	ITEA FPO SC / I-CCS Bituminous Coal	ITEA FPO SC / I-CCS PRB Coal
		New-Build			Retrofit FPO Firing	
Power in LHV	MWth	1,345	1,410	1,450	1,470	1,500
Gross Power	MWe	580	695	700	710	719
Parasitic Power	MWe	30	145	150	160	169
Net Power	MWe	550	550	550	550	550
Efficiency % LHV	%	40.9%	39.0%	37.9%	37.5%	36.7%
Capital	$M	$869	1,322	1,322	$736	$736
CAPEX	$/kWe	$1,579	2,369	2,369	$1,338	$1,338
LCOE	$/MWh	$68	79	$77	$64	$62
LCOE compared to Base Line			116%	113%	94%	91%

Acknowledgements

The work performed as a part of this study was supported by NETL and the US Department of Energy and the authors express their gratitude for the support their work.

This study was prepared as an account of work sponsored by an agency of the United States Government. Neither the United States Government nor any agency thereof, nor any of their employees, makes any warranty, express or implied, or assumes any legal liability or responsibility for the accuracy, completeness, or usefulness of any information, apparatus, product, or process disclosed, or represents that its use would not infringe privately owned rights. Reference herein to any specific commercial product, process, or service by trade name, trademark, manufacturer, or otherwise does not necessarily constitute or imply its endorsement, recommendation, or favoring by the United States Government or any agency thereof. The views and opinions of authors expressed herein do not necessarily state or reflect those of the United States Government or any agency thereof.

References

[1] National Energy Technology Laboratory. Detailed Coal Specifications. Quality Guidelines for Energy System Studies. s.l.: DOE/NETL-401/012111, January 2012.

[2]Hong J, Chaudhry G, Brisson JG, Field R, Gazzino M, Ghoniem A. Analysis of Oxy-fuel Combustion Power Cycle Utilizing a Pressurized Coal Combustor, Energy, Elsevier Ltd., vol. 3, issue 9, 2009, P. 1332-1340