On a Future for Smart Inverters with Integrated System Functions

Yaosuo Xue[1], Michael Starke[1], Jin Dong[1], Mohammed Olama[1], Teja Kuruganti[1], Jeffrey Taft[2], and Mallikarjun Shankar[1]

[1]Oak Ridge National Laboratory, Oak Ridge, TN, USA
[2]Pacific Northwest National Laboratory, Richland, WA, USA
Contact Email: xuey@ornl.gov

***Abstract*—The modern electric power grid is gradually evolving to include high-penetration power electronics in a distributed architecture that will pose pressing new challenges on power quality, system control, and operation. The state-of-the-art smart inverters for solar photovoltaics may not be sufficient to address some of the stability and control challenges such as harmonic resonances due to the interactions of multiple power electronics converters. This paper discusses a future of smart inverters with integrated system functions and its associated challenges and identifies smart inverter research trends and features in the context of flexible control architectures. Future power electronics research will shift from hardware solutions to more control solutions with integrated system functions under distributed power grid scenarios with small-scale power electronics interfaced with distributed generations and loads.**

***Index Terms*--**

I. Introduction

With the maturity of power electronics topologies and recent advances in wide bandgap semiconductor devices and high-frequency magnetic components, power electronics are approaching performance limitations from the internal driving philosophy, and the future technological development of power electronics is primarily driven by emerging applications as recognized by Wyk [1] and Kolar [2]. It has also been identified in the 2015 Control Workshops of the US Office of Naval Research [3] that power electronics are at the crossroads with the goals shifting from hardware performance metrics (i.e., smaller size, lighter weight, and lower cost) to more control, more functions, more integration, more flexibility, and more commonality. Being one of the major emerging applications for power electronics, electric power grids are experiencing the vast inception of high-penetration power electronics from transmission backbones (e.g., HVDC and FACTS) to grid edges (i.e., distribution systems), as illustrated in Fig. 1, and are transitioning into an integrated and power electronics-based grid.

In 2011, the US Department of Energy (DOE) started the Grid Modernization Initiatives to accelerate modernization of the nation's electric infrastructure, bolster electric-grid innovation, and advance a clean energy economy. To support this vision, six key attributes were identified for a modernized grid: reliability, security, affordability, flexibility, sustainability, and resilience. This has offered tremendous opportunities for power electronics to expand in the utility space and moves across the boundary from high-voltage and low-voltage to medium-voltage applications, In addition, however, advanced system functionalities are required. As an enabling technology, power electronics have been used to support energy efficiency and grid integration of sustainable energy. With grid modernization, power electronics can also play roles in advanced grid architectures [25,26] as a fundamental resilience tool. Nevertheless, large-scale power electronics integration poses new challenges [4] on stability and power quality of modern power grids, which need to be addressed.

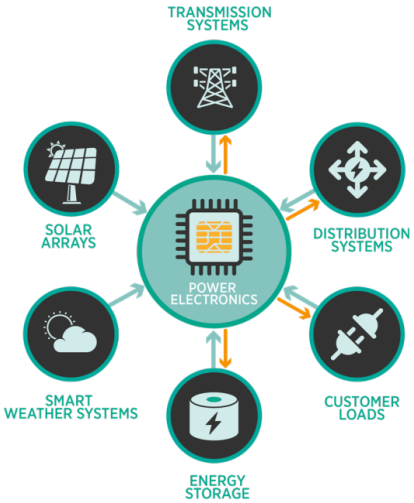

Fig. 1. Power electronics applications in electric grid. (Source: US Department of Energy)

This manuscript has been authored by UT-Battelle, LLC, under contract DE-AC05-00OR22725 with the US Department of Energy (DOE). The US government retains and the publisher, by accepting the article for publication, acknowledges that the US government retains a nonexclusive, paid-up, irrevocable, worldwide license to publish or reproduce the published form of this manuscript, or allow others to do so, for US government purposes. DOE will provide public access to these results of federally sponsored research in accordance with the DOE Public Access Plan (http://energy.gov/downloads/doe-public-access-plan).

Control instabilities at subsynchronous and harmonic frequencies have been observed [5] between current-source power converters and AC networks in high-voltage and high-power grid applications. New control stability issues arise with voltage-source converters. In recent years, the large deployment of small-scale inverter-based distributed generations has raised utility concerns about the operational challenges to maintain system-level voltage and frequency stability (e.g., the 50.2 Hz shutdown of PV systems in Germany, the "Nessie Curve" in Hawaii, and the "Duck Curve" in California), as well as system protection coordination issues due to reverse power flow and insufficient short-circuit current contribution. Thus, system operators and utilities have changed their attitudes towards small-scale distributed energy resources (DER) and have called for their active participation on system frequency control and voltage support. The concept of smart inverters has been proposed in [6] and [7]. Various control concepts [8-11] of virtual synchronous machines have also been proposed to achieve grid stability and autonomous operation. In the meantime, the industry has begun efforts to standardize common and advanced inverter control functions for interconnection and interoperability, and relevant IEEE and IEC standards are currently under revision or have been fully revised to mandate these functions for compliance purposes.

In this paper, the state of the art in smart inverter standard development is first reviewed. Then potential integrated system functions are proposed for future smart inverters beyond those common functions defined in the standard. Furthermore, research trends for smart inverters are projected in terms of desired features and control architectures, followed by the conclusion.

II. The State of the Art

The term "smart inverters" was initially used for solar photovoltaic inverters with control functions of fault ride-through, grid voltage support, and reactive power compensation, which were either not required or not allowed by the standard and grid codes at the time. With power deregulation, there is a demand for distributed generations to provide ancillary services. Nowadays this "smart" function has been extended from solar photovoltaic inverter to any type of distributed energy resources (DERs) with power electronics–based interfaces in utility distributions systems. A common understanding is that a smart inverter has communication capabilities and can provide additional and advanced control functions, in many cases autonomous functions, beyond its basic power conversion and energy feeding functions. Hence, it is also called a multifunctional inverter.

Various stakeholders, such as industries, utilities, government, and standards bodies, have been working together to develop common, standardized control functionalities for interconnection and interoperability of DERs with electric power systems. These efforts address various issues from standard control functions, information and data models, communication protocols, and grid codes to compliance and certification testing. An overview of US smart inverter activities is given in Table I.

Table I. Smart inverter standards and grid codes.

Standard Type	Standards or Activities
Standard control functions	IEEE 1547-2018, EPRI smart inverter initiative, IEC 62109-2
Information & data models	IEC 61850-7-420, SunSpec, OpenADR, OpenFMB, etc.
Communication protocols	IEEE 1815 (DNP3), IEEE 2030.5 (SEP2), etc.
Grid codes	FERC, NERC, CPUC Rule 21, HPUC Rule 14H
Compliance & certification testing	UL 1741 SA, UL 62109-2, IEEE P1547.1

A. *EPRI Common Functions for Smart Inverters*

Since 2009, EPRI has initiated the smart inverter communication initiative to define common functions and communication protocols for integration of DERs with distribution grids. Initially, 7 functions were defined, which were later extended to more than 21 functions, as documented in [12]. The functions include several advanced control functions such as dynamic volt-var functions, volt-watt functions, frequency-watt functions, watt-power factor functions, watt-var functions, price-driven functions, temperature-driven functions, load and generation following functions, real power smoothing functions, and fault ride-through functions.

The aim of this initiative is to provide consistent functions and uniform communication protocols for a diversity of resources (e.g., solar PV and energy storage) in varying sizes and from different manufacturers to integrate with utility distribution management and supervisory control and data acquisition systems. The communication information models of these functions have been considered by IEC TC57 WG17, which takes charge of developing the communication architecture for integrating DER into the IEC 61850 body of communication standards. IEC technical report, IEC/TR 61850-90-7, describes those advanced functions object modeling for power converters in DER systems, which has been adopted in the new edition of IEC 61850-7-420, the first standard for DER object modeling.

B. *California Rule 21 Smart Inverter Working Group Recommendations*

Electric utilities have experienced operational challenges from high penetration solar power and frequency stability issues due to a significant amount of instant tripping of traditional PV inverters connected to low-voltage distribution networks. In Germany, the study of the "50.2 Hz problem" suggests technical retrofitting of existing PV inverters with frequency-dependent active power control and stochastic reconnection. In the United States, utilities have foreseen the

phenomenon of "duck curve," or "Nessie curve," which depicts potential solar power overgeneration resulting in a reduced net load profile during midday (10:00 a.m.–2:00 p.m.), followed by a sharp ramp-up in later afternoon (3:00 p.m.) to evening (9:00 p.m.) requiring expensive and fast-responding generators to react. Therefore, the utilities have started to investigate new interconnection and operation requirements for inverter-based DERs.

The California Public Utilities Commission (CPUC) and the California Energy Commission initiated a smart inverter working group in 2013 to develop technical recommendations [13] and steps to be taken for inverter-based DERs to support distribution system operations. Seven autonomous inverter functionalities, including anti-islanding protection, low/high voltage ride-through, low/high frequency ride-through, dynamic volt-var operations, ramp rates, fixed power factor, soft-start, communication for data monitoring and control, and cyber-security requirements have been recommended and approved to be included in California Electric Tariff Rule 21, which governs DER interconnection in California utilities. Advanced functions by communications are currently under development to include the control of real power and reactive power, frequency support, emergency response, and scheduling functions.

The approval of California Rule 21 has also led to IEEE 1547a-2014, which was amended to IEEE 1547-2003 with changes on voltage regulation and abnormal voltage/frequency response requirements, and to UL 1741 SA, which provides testing and certification standards for smart inverters with grid support functions.

C. IEEE 1547 and IEEE 2030 Standard Series

Relevant IEEE standards, such as IEEE 2030, IEEE 2030.x, IEEE 1547, and IEEE 1547.x, are currently under revision, under development, or have been revised to provide guides or recommended practices for DER interconnections and smart grid interoperability. The changes are sponsored and coordinated by IEEE SCC21, the standards coordinating committee on fuel cells, photovoltaics, dispersed generation, and energy storage.

IEEE Std 1547-2018, which governs the interconnection and interoperability of DERs with associated electric power systems, has recently been revised and published to reflect some of the advanced functions demanded by the utilities. These control functions [14] include constant power factor mode; voltage-reactive power mode; active power-reactive power mode; constant reactive power mode; voltage-active power mode; frequency droop mode; new power quality requirements (e.g., limits of rapid voltage changes); and new voltage, frequency and the rate-of-change of frequency fault ride-through requirements for DER during abnormal grid operating conditions.

IEEE 1547 specifies and harmonizes interconnection requirements for DERs. The state public utilities commissions may adopt it in distribution legislation (e.g., California Rule 21). The revised IEEE 1547 is also aligned with FERC and NERC bulk system reliability standards that regulate transmission-level interconnection and commerce.

D. Related DOE Efforts on Smart Grid Devices

In 2011, the US DOE SunShot Initiative launched the Solar Electric Grid Integration–Advanced Concepts (SEGIS-AC) program, which targets ways to develop smart PV inverter systems with intelligent, interactive, and dispatchable functions so that solar power can be seamlessly integrated into smart grid management [15].

Realizing that today's power grid is facing challenges due to more renewable energy and more distributed system structure, DOE developed a grid modernization multiyear program plan with six defined tasks. The first task is to develop smart devices and an integrated system that interoperate with each other, with grid sensors and grid control systems, and that interconnect to maintain stable grid operations while providing valuable grid and local energy services. Power electronics (i.e., the inverters associated with DERs) are among the grid devices required to achieve increased functionality to provide grid services with the overall goal by 2020 to reduce the cost of integrating renewable energy by 50%, reserve margins by 33%, and reduce outages by 10%, together with energy storage and other grid devices.

As reviewed, the state of the art in smart inverter development is towards standardized functionalities for interoperability and centralized communications for control room integration for utility applications with high penetration renewable scenarios. Although interoperability can provide a lot of benefits from the system control perspective, smart inverters with advanced autonomous capabilities will play major roles in distributed grid controls. There is a need to extend smart inverters into distributed deployment applications (e.g., microgrids) and to advance smart inverters with additional autonomous, cooperative control functions operating with distributed communications (e.g., OpenFMB), or without communications, and integrated system operation, control, and protection functions.

III. Integrated System Functions

The challenges of power grids with decentralized system structures can be approached at different hierarchical levels and different time scales. Typically, the lower the level at which it is addressed, the faster the issue will be resolved and the lower the cost. For this purpose, smart grid devices, like smart inverters with integrated system functions, provide a wide range of grid services, alleviate system control and protection burden, and better integrate with overall grid operations.

A. Integrated System Control Functions

To a large extent, the inverter function and operation mode depend on the interconnected grid or load conditions. The

three basic inverter functions [16] are grid-feeding, grid-forming, and grid-supporting. Typically, an inverter is designed and controlled to be either a voltage source to form a grid voltage with/without grid frequency support or a current source to feed energy into the grid with/without grid voltage support. With increasing grid dynamics and uncertainty, it is desired to design the inverter with flexible control modes on the fly based on in situ grid operating conditions and grid control architecture.

Traditional power system control philosophy is to assign different system functions to different resources and devices based on their economics and dynamics, resulting in dedicated devices for dedicated functions (e.g., generations for base-loading, peak-loading, and regulation, respectively, and devices for harmonic and reactive power compensation, separately) and centralized system control structure. With the maturity of power electronics and continuous advance on controls, smart inverters offer the potential to serve multiple functions (e.g., with the primary function of energy feeding and with secondary or ancillary functions of grid support based on capability or shared-grid voltage/frequency control, which renders a distributed system control philosophy and flexible grid devices in future power grids). Some of the ancillary control functions include harmonic compensation, unbalance compensation, damping injection, synthetic inertia or fast frequency response, and dynamic reactive power control.

B. Distributed System Stabilization Functions

Typical stability problems in power grids are within low frequency (i.e. subsynchronous or subharmonic range) due to a large amount of rotational inertia and relatively slow electromechanical dynamics. Subharmonic resonances happen in large power plants and inter control areas. Dedicated power system stabilizers (PSSs) are normally equipped to damp the oscillation and maintain system stability.

Compared to synchronous generators, power electronics–based generation exhibits different behaviors based on its inherent nature, despite the fact that the basic power generation function is quite similar. One observation is that a pure power converter does not have an internal energy buffer and always maintains instantaneous input-output power balance, although limited power buffering does exist mainly for high-frequency harmonics filtering (i.e., power quality purpose). This translates to a power system requirement as a low or zero-inertia system. Another major characteristic is that power electronics use a digital feedback controller with high control bandwidth and regulate the output voltage or current very tightly. This translates into power system specifications as either a constant power load with negative incremental input impedance or a generator with dynamic output impedance. Both cases are prone to oscillation and instability issues.

With high-penetration power electronics in the future grid, the power system dynamics are moving towards millisecond time scale electromagnetics and being control mode dominated. Accordingly, harmonic resonance could be introduced at a range of a few hundred hertz to a few kilo-hertz, because of the control bandwidth, harmonic generation, and impedance interactions of inverter output filter and line impedance. Normally it is hard to design a dedicated PSS to suppress such resonance. However, each converter in the system can be designed to share the system stabilization function in a distributed way while providing their primary functions. Such techniques include various active damping, impedance reshaping, feedforward control, passivity-based control, and other robust control techniques.

C. Integrated System Protection Functions

Grid interconnection standards require the inverter to be capable of detecting grid abnormal conditions and of responding with correct actions (e.g., either de-energizing or keeping online and injecting reactive power). There is a tendency to integrate protective relay functions, even fault current blocking and interrupting functions like a circuit breaker, into the converter system, given the fault current control capability of power electronics and the fast switching behavior of semiconductor devices, which can detect the fault at the very beginning and interrupt/isolate the fault current using lower rated devices because the fault current magnitude is relative smaller initially.

Smart inverters with integrated protection functions, such as self-awareness functions, advanced prognostics, and health management algorithms, can also achieve internal condition monitoring, lifetime prediction, and improved operational reliability, effectively avoiding catastrophic accidents in safety critical systems using power electronics.

D. Integrated Sensing and Measurment Functions

Power grids demand better observability and situational awareness for operation and control purposes. There is a need to develop low-cost sensors and phasor measurement units (PMUs). Incorporated grid sensor and PMU functionalities will substantially reduce the cost of implementing dedicated PMU systems, increase system observability (situational awareness) and controllability (optimality), and enable synchronization as well as accurate power sharing. Special redundancy or other measures need to be taken to "correct" sensor data during hardware failure, system faults, and cybersecurity compromised situations.

E. Integrated Cybersecurity Functions

With the booming of the Internet of Things, digital communication capabilities are replacing the old-fashion analog control interfacing in power plants. For inverter-based distributed grid devices, standardized and nonproprietary communication protocols are required for interoperability and control purposes. On the contrary, power electronics and embedded control units are facing potential risks from cyberattacks, inadvertent control errors, and hardware failure. Hence, conventional power electronics design needs to be

reexamined from a cybersecurity perspective to identify its vulnerabilities and physical impacts, and a secure and resilient power electronics architecture will need to adopt a multilayered protection mechanism to integrate power hardware, sensors, control/communication hardware and software, and to offer hardware-reinforced cybersecurity functions.

Most existing cybersecurity studies and efforts are focusing on cybersecurity framework, attack modeling, and laboratory testbed,. Little commercial work has been reported on the embedded cybersecurity functions within the power electronics hardware. In addition, existing cybersecurity approaches are mostly software based (e.g., network firewalls and testing sandboxes) and focus mainly on communication systems and industrial control systems. Although software-centric solutions are easy to update and patch as new vulnerabilities are discovered, hardware-based solutions offer advantages such as fewer data vulnerabilities because the tampering of hardware circuits requires physical access, hardware root of trust, etc.

Cyber-secured, grid-connected power converters will require development of hardware-based authentication mechanisms, analog IC device–based protection, and fail-safe design features for power converter controller and auxiliary circuits (interfacing and gate drive circuits). Specifically, a multilayer hardware protection architecture will be need to be developed and implemented based on reconfigurable hardware and analog devices to survive potential threats from cyberattack and system fault or failure. In addition, hardware-based authentication will be integrated to implement encryption algorithms and to protect firmware from malicious cloning and tampering by challenge-response strategies. Mechanisms on runtime monitoring and secure bootstrapping will be devised to secure software integrity. Fig. 2 shows a multilayer protection scheme of the controller architecture. For authentication, reconfigurable hardware (FPGA or ASIC) or commercial cryptoprocessors will be used to provide immunity to any network attack. Protection logics for overvoltage, overcurrent, overtemperature, and shoot-through faults will be implemented using analog operational amplifiers for physical errors or unknown glitches.

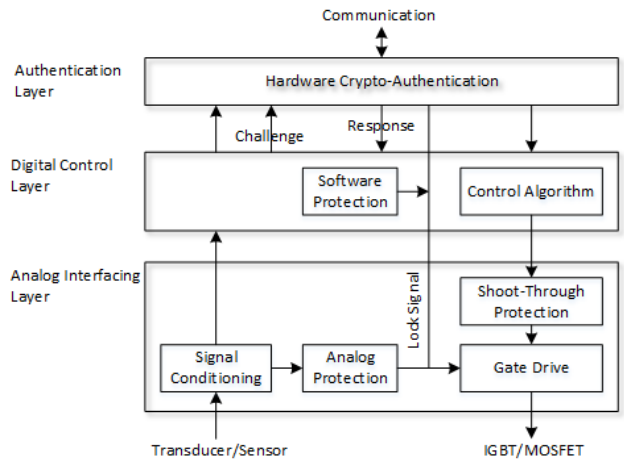

Fig. 2. Three-layer design of power electronics controller.

IV. Challenges and Solution Trends

Technical challenges exist for smart inverters embedded with system functions. Although the power electronic community is addressing the challenges, there are emerging trends that offer solution approaches for smart inverters moving towards more software-oriented, artificially intelligent, and transactive operations.

A. Challenges

1) Multi-inverter system dynamics and stability analysis

The future power grid will inevitably adopt more and more power electronics–based energy resources, controllable load, and other type of devices. These power electronics–based grid devices can be divided into three categories: generators with power converters interface decoupling the source from the grid, loads controlled by power converters with regulated output voltage, and various power electronics based power flow controllers (including HVDC, FACTS, and distributed grid edge technologies).

It is commonly known that power electronic devices have negative incremental input impedances, which interacts with grid line impedance or other grid devices causing oscillations and potential instability. Therefore, multi-inverter system dynamics and their stability analysis is among imminent research and development needs for increasing penetration of power electronics, since existing state-space modeling approaches and commercial software tools become incompetent because of complexity and computation requirements. Various impedance-based stability approaches [21] can be adopted but are still limited to small-scale power electronics systems. There is a lack of tools and approaches for integrated dynamic grid analysis, modeling, and simulations of an ultra-large-scale power electronics based grid.

2) Limited hardware overloading capabilities

Power inverters exhibit physical hardware constraints and may require additional hardware and oversizing design, depending on the required control functions. New generations of power semiconductor devices based on wide bandgap materials have been developed that push the boundary of power electronics to higher voltage, higher frequency, and higher temperature [17]. Nonetheless, compared with conventional iron or copper-based components, semiconductor-based power electronics devices are still less efficient during normal full-power processing conditions and are less robust, or rather fragile, during faulty conditions, not to mention cost and reliability concerns. Therefore, high-efficiency, high-power, and overloading or short-circuit interrupting capabilities are key performance metrics of power devices to enhance and fortify power electronics for series-connected grid applications, such as solid-state transformers and circuit breakers.

3) *Limited energy-buffering capabilities*

Power electronics converters have limited energy buffering capabilities, except for very little power buffering from dc-link capacitors, and are typically designed to achieve instantaneous power balancing between input and output. For renewable energy applications, the nondispatchability due to intermittent energy resources causes high operating reserves and other issues such as voltage spikes and reserve ramping-up rate requirements. Advanced forecasting techniques, firming approaches using energy storage, and spatial aggregation for smoothing effects are common operational practices to address this issue. Hybrid PV/energy storage or multi-input and/or multiport converter systems are proposed to address this issue, in addition to advanced forecasting techniques and spatial aggregation for smoothing effects at the system operation level.

Compared to conventional machine-based generators, this limited energy buffering is also equivalent to the lack of rotational or mechanical inertia, which reduces the capability of primary frequency response as in a conventional grid but could be improved by inertia emulation in control and by integrating additional energy storage components in power inverters.

4) *Autonomous operation challenge*

Completely autonomous operation remains a technical challenge for smart inverters. Performance of global frequency and voltage control may be compromised with distributed control methodologies. To tackle this challenge, cooperative control based on consensus algorithm and graph theory with neighboring communications have been applied on smart inverters for autonomous microgrid operation [18].

B. *Solution Trends*

The development of power electronics has been driven by internal semiconductor technology and converter circuit topology, approaching the limits of its internally set metrics (e.g., efficiency). Although the original driving philosophy indicates internal maturity, the external constituent technologies of packaging, manufacturing, electromagnetic and physical impact, and converter control technology still present remarkable opportunities for development. As an enabling technology, power electronics is generally considered to provide only a supporting partial function to enable a main function to be realized. Hence, the future development of power electronics, together with internal developments such as wide bandgap semiconductors, will be driven externally by emerging applications where the requirements cannot be satisfactorily fulfilled by existing concepts, as depicted in Fig. 3. With this observation, power electronics are experiencing the following emerging solution trends in an integrated power electronics–based grid.

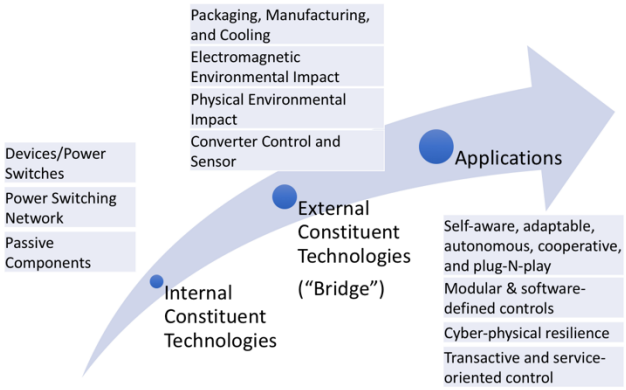

Fig. 3. Power electronics development trends.

1) *Transactive control and service-oriented interface*

New economic tools and processes have been introduced in a modernized grid. Transactive energy (TE) is one of these processes to enable market-based transactive exchange between energy producers and consumers or prosumers. As defined by the US DOE GridWise Architecture Council, the TE is "a system of economic and control mechanisms that allows the dynamic balance of supply and demand across the entire electrical infrastructure using value as a key operational parameter." Accordingly, various transactive control methods are emerging for DERs and responsive loads to provide grid services.

For smart grid interoperation, the concept of "Energy Services Interface (ESI)" was proposed in the NIST Framework and Roadmap for Smart Grid Interoperability Standards. An ESI is a bidirectional logical, abstract interface that supports secure communications between internal entities, for example, a facility with DERs and loads, and external entities (e.g., the utilities). The ESI adopts service-oriented architecture and serves as a platform that provides energy services to both the facility side and the grid side. Even though IEEE 1547 is well established as an interconnection standard for DERs, there is a trend to push the TE and ESI concepts from building loads towards generic DERs.

2) Software-defined smart inverters with modular and universal control architecture

A multifunctional smart inverter demands optimized and flexible control structure to facilitate transition among operation modes or control functions. Research trends are moving towards control modularity [19] and/or universal control architecture [20] driven by software switches or control parameters. Normally an inverter is designed for a dedicated application, such as solar, wind, and energy storage, with specific control requirements and functions. The concept of universal inverters, more like general power amplifiers, has emerged in recent years. These inverters can be customized by software modification to adapt to specific applications; hence, they are referred to as software-defined inverters.

Smart inverters shall be universal and adapt themselves to different grid control architectures, centralized or decentralized. In a microgrid, three-tier hierarchical control structure is proposed [22]. With the nature of spatially dispersed inverters, various distributed control techniques [23] can be deployed to reduce the complexity of a communication network and to avoid a single point of failure using a central controller. This has motivated research efforts on a cooperative method [18] and a game-theoretic method [24] for microgrid controls. The author has proposed a holonic smart inverter concept [7] with five desired features to reduce the centralized control and communication requirements and to relieve the system operation burden. The smart inverter hardware structure, functional model, and the mapping of possible control functions and approaches to the five features are also suggested in [7].

3) Artificial intelligence

As already identified in [7], smart inverters are expected to be autonomous, biology-inspired, and cognitive entities to foster a truly distributed control philosophy and to accommodate the control challenges of a future distributed grid architecture with increasing small-scale grid-interconnected devices. These smart features include self-awareness, adaptability, autonomy, cooperativeness, and plug-and-play capability, which are supported and implemented by various control functions.

4) Power electronics as grid architetcure resilience tools

Although various grid-hardening approaches can be adopted to strengthen the grid infrastructure's physical resistance to natural events, the existing centralized and widely synchronized US grid architecture poses risks on cascaded failure. Ultimate grid resilience shall be approached from system architecture perspective. Presently there is no established standard for the design of resilient power systems, and the concept of design-for-resiliency becomes crucial to achieve the long-term grid resiliency goal. To make the power grid more adaptable and elastic to continuously changing and dynamic conditions from either climate or cyber events, a stronger grid infrastructure is not sufficient. The grid needs to be smart and agile everywhere to react to changes, and smart power electronics play irreplaceable roles in this area.

For this purpose, a power electronics–based zonal grid architecture is proposed with inherent power flow control, noncascaded fault management, and distributed power system architecture with full controllability to maximize grid resiliency. The concept of a "interconnected, but dynamically-decoupled grid structure" will be applied here, as shown in Fig. 4, and the new grid architecture is established based on design-for-resiliency and controllability measures. Compared to the machine-based grid, the power electronics–based grid dynamically decouples generation, load, and grid dynamics such that the grid frequency can be controlled in a fast way. The salient features are asynchronous zonal grid operation, controlled power flow, and nonpropagated fault management.

The key component is the power electronics "joint" inserted among the various zones to increase grid elastics. It can be applied to existing centralized grids granularly, for instance, at the point of interconnection for networked microgrids or microgrid-to-grid, where the interfacing device can be replaced by the proposed power electronics based device for asynchronized operation, seamless transition, and decoupled/isolated fault management to minimize cascaded system failure. Other possible locations include the solid-state substation, transmission buses, distribution feeder segmentation, and so on.

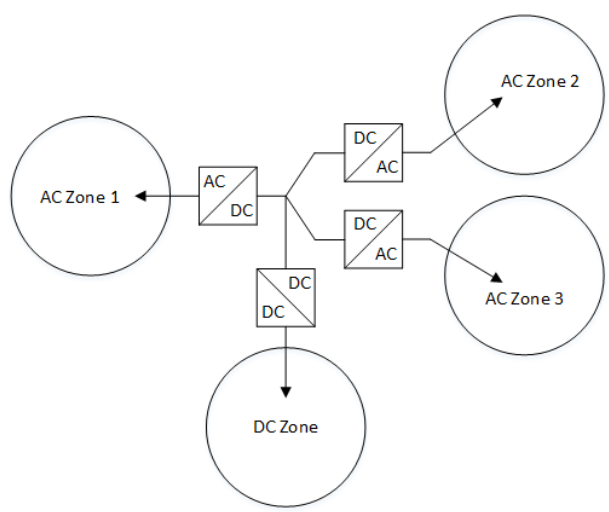

Fig. 4. A canonical power electronics–based grid architecture for grid resilience.

V. Conclusion

We envision the future power grid as a distributed power electronics–based grid, where all the individual devices, such as DERs, power flow controllers, solid-state transformers, and medium-voltage and high-voltage dc converters are required to participate in grid services and share common system control goals. Smart inverter functionalities provide a technical basis for the capabilities of grid services.

Current smart inverter development is focusing on standardized control and protective functions for grid compliance and interoperability. While these functions can be characterized as grid-supporting functions in today's centralized grid architecture and control environment, the trend of future smart inverters is evolving into more intelligent and autonomous entities with integrated system functions, which would demonstrate superiority when handling complex decentralized grid dynamics and uncertainties and flexibly adapting to appropriate control modes. Furthermore, smart power electronics would be expected to serve as a fundamental grid architecture resilience tool.

Acknowledgment

This material is based upon work supported by the US Department of Energy, Office of Electricity Delivery & Energy Reliability, Advanced Grid Modeling Program, and GMLC 1.2.1 Grid Architecture Project, under contract number DE-AC05-00OR22725. Partial work is also from research sponsored by the Laboratory Directed Research and Development Program of Oak Ridge National Laboratory, managed by UT-Battelle, LLC, for the US Department of Energy.

References

[1] J. D. van Wyk and F. C. Lee, "On a Future for Power Electronics," in IEEE JESTPE, vol. 1, no. 2, pp. 59-72, June 2013.

[2] J. W. Kolar, J. Biela, S. Waffler, T. Friedli and U. Badstuebner, "Performance trends and limitations of power electronic systems," in Proc. of IEEE CIPS, 2010, pp. 1-20.

[3] L. Petersen, Controls Workshop, Office of Naval Research, Tallahassee, Florida, Nov. 18-19, 2015.

[4] X. Wang and F. Blaabjerg, "Harmonic stability in power electronic based power systems: concept, modeling, and analysis," in IEEE Transactions on Smart Grid, pp. 1-12, Mar. 2018.

[5] J.D. Ainsworth, "Harmonic instability between controlled static convertors and a.c. networks," in Electrical Engineers, Proceedings of the Institution of, vol. 114, no. 7, pp. 949-957, July 1967.

[6] Y. Xue et al., "Towards next generation photovoltaic inverters," In Proc. of IEEE ECCE, Phoenix, AZ, 2011, pp. 2467-2474.

[7] Y. Xue and J. M. Guerrero, "Smart Inverters for Utility and Industry Applications," In Proc. PCIM Europe 2015, Nuremberg, Germany, 2015, pp. 1-8.

[8] R. Hesse, D. Turschner, and H.-P. Beck, "Microgrid stabilization using the virtual synchronous machine (VISMA)," in Proc. 2009 International Conf. on Renewable Energies and Power Quality (ICREPQ), Valencia, Spain, Apr. 15-17, 2009, pp. 1-6.

[9] Q. C. Zhong, P. L. Nguyen, Z. Ma and W. Sheng, "Self-Synchronized Synchronverters: Inverters Without a Dedicated Synchronization Unit," in IEEE Transactions on Power Electronics, vol. 29, no. 2, pp. 617-630, Feb. 2014.

[10] Q. C. Zhong, "Power-Electronics-Enabled Autonomous Power Systems: Architecture and Technical Routes," in IEEE Transactions on Industrial Electronics, vol. 64, no. 7, pp. 5907-5918, July 2017.

[11] B. B. Johnson, M. Sinha, N. G. Ainsworth, F. Dörfler and S. V. Dhople, "Synthesizing Virtual Oscillators to Control Islanded Inverters," in IEEE Transactions on Power Electronics, vol. 31, no. 8, pp. 6002-6015, Aug. 2016.

[12] Common Functions for Smart Inverters, Version 4. EPRI, Palo Alto, CA: 2016.

[13] Recommendations for Updating the Technical Requirements for Inverters in Distributed Energy Resources, CPUC Smart Inverter Working Group, Jan. 2014.

[14] IEEE Std 1547-2018, IEEE Standard for Interconnection and Interoperability of Distributed Energy Resources with Associated Electric Power System Interfaces.

[15] G. Yuan, "Smart PV inverters — DOE SunShot SEGIS-AC program review," 2014 IEEE PES T&D Conference and Exposition, Chicago, IL, USA, 2014, pp. 1-4.

[16] J. Rocabert, A. Luna, F. Blaabjerg, and P. Rodriguez, "Control of power converters in AC microgrids," IEEE Trans. Power Electron., vol. 27, no. 11, pp. 4734–4749, 2012.

[17] A.Q. Huang, "Power Semiconductor Devices for Smart Grid and Renewable Energy Systems," in Proceedings of the IEEE , vol. PP, no. 99, pp. 1-29, June 2017.

[18] V. Nasirian, Q. Shafiee, J. M. Guerrero, F. L. Lewis and A. Davoudi, "Droop-Free Distributed Control for AC Microgrids," in IEEE TPEL, vol. 31, no. 2, pp. 1600-1617, Feb. 2016.

[19] A. Monti and F. Ponci, "PEBB Standardization for High-Level Control: A Proposal," in IEEE TIE, vol. 59, no. 10, pp. 3700-3709, Oct. 2012.

[20] Q. C. Zhong, W. L. Ming and Y. Zeng, "Self-Synchronized Universal Droop Controller," in IEEE Access, vol. 4, pp. 7145-7153, 2016.

[21] X. Wang, F. Blaabjerg and W. Wu, "Modeling and Analysis of Harmonic Stability in an AC Power-Electronics-Based Power System," in IEEE TPEL, vol. 29, no. 12, pp. 6421-6432, Dec. 2014.

[22] J. M. Guerrero, M. Chandorkar, T.-L. Lee, and P. C. Loh, "Advanced control architectures for intelligent microgrids—Part I: Decentralized and hierarchical control," IEEE Trans. Ind. Electron., vol. 60, no. 4, pp. 1254-1262, Apr. 2013.

[23] G. Antonelli, "Interconnected dynamic systems: An overview on distributed control," IEEE Control Systems Magazine, vol. 33, no. 1, pp. 76-88, Feb. 2013.

[24] W. Weaver, "Dynamic energy resource control of power electronics in local area power networks," IEEE Trans. Power Electron., vol 26, no. 3, pp. 852-859, Mar. 2011.

[25] J.D. Taft and A. Becker-Dippman, Grid Architecture, PNNL, January 2015, available online: https://gridarchitecture.pnnl.gov/media/white-papers/Grid%20Architecture%20%20-%20DOE%20QER.pdf

[26] J.D. Taft, Grid Architecture 2, PNNL, January 2016, available online: https://gridarchitecture.pnnl.gov/media/white-papers/GridArchitecture2final.pdf