Three-Phase Short-Circuit Fault Implementation in Converter Based Transmission Line Emulator

Shuoting Zhang, Bo Liu, Sheng Zheng, Yiwei Ma, Fred Wang, Leon M. Tolbert
Department of Electrical Engineering and Computer Science, the University of Tennessee
Centre for Ultra-Wide-Area Resilient Electric Energy Transmission Networks (CURENT)
Knoxville, Tennessee, USA
zshuotin@vols.utk.edu

***Abstract*— A hardware test-bed (HTB) has been developed to realize power system emulation by mimicking the system components with universal three-phase voltage source converters (VSCs). The VSC-based transmission line emulator has also been successfully developed to flexibly represent interconnected ac lines under normal operating conditions. As the most serious short-circuit fault condition, the three-phase short-circuit fault emulation is essential for power system studies. This paper proposes a model to realize the three-phase short-circuit fault emulation within the emulated transmission line. At the same time, a combination method is proposed to eliminate the undesired transients caused by the current reference step changes while switching between the fault state and normal state.**

I. Introduction

A hardware test-bed (HTB) platform has been developed to emulate the power system by programming the interconnected three-phase voltage source converters (VSCs) to behave like the intended power system components, as shown in Fig. 1 [1-4]. Since the emulator VSCs share the dc link, the active power circulates among the VSCs, and the dc power supply only makes up for the power loss. The HTB enables realistic testing and demonstration of power system operation and control with actual measurement, communication, and control stations.

Although an inductor, capacitor and resistor can be employed to emulate transmission lines, a transmission line emulator based on two three-phase VSCs has been developed to improve the flexibility of changing the emulated line impedance [5]. The normal operation and manual line trip functions have been implemented in the transmission line emulator [6].

As a common disturbance in power systems, transmission line short-circuit faults are employed for many studies. Specifically, as the most serious short-circuit fault condition, the three-phase short-circuit fault emulation is essential for extending the HTB capabilities of power system research. In HTB, a short-circuit fault emulator based on a shunt connected VSC has previously been developed, but only the short-circuit fault at a voltage bus could be emulated [7].

Different from previous work, this paper implements the three-phase short-circuit fault function in the transmission line emulator to represent a fault at different locations along the emulated transmission line. The transmission line three-phase short-circuit fault emulation developed in this paper is based on the balanced three-phase three-wire system, which is usually emulated in HTB.

The structure of the paper is organized as follows: Section II presents the transmission line emulation model with both normal state and three-phase short-circuit fault state functions; Section III presents the transmission line emulator implementation in HTB; and Section IV presents the simulation and experiment verification.

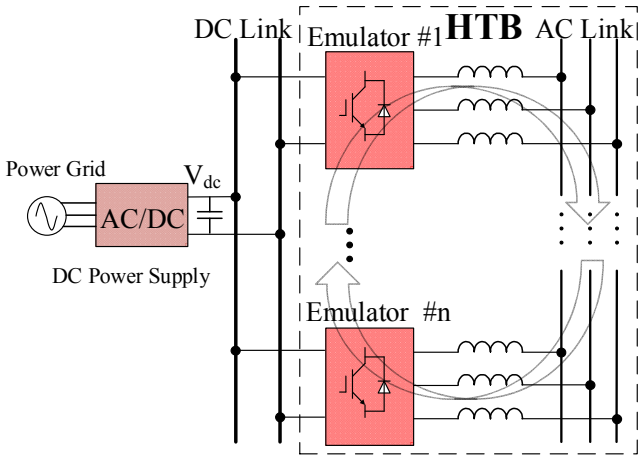

Fig. 1. System configuration of HTB.

II. Transmission Line Emulation Model

A. Transmission Line Model

A transmission line can be simplified as a π model for many power system studies, as shown in Fig. 2 [8]-[13].

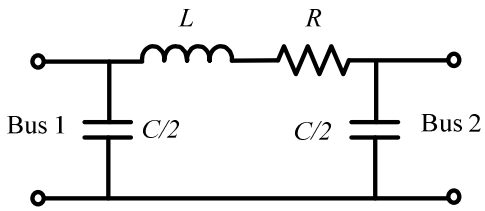

Fig. 2. Transmission line π model.

Usually, the transmission line is connected with buses on both sides, where generators or loads exist [14]-[17]. Thus, the parallel capacitors in the π model can be integrated into the generator or load emulator connected on the same buses [18]-[20]. The parallel capacitance is negligible for many short transmission lines. In this paper, the emulated transmission line is further simplified as an inductor in series with a resistor, as shown in Fig. 3 [5]-[6].

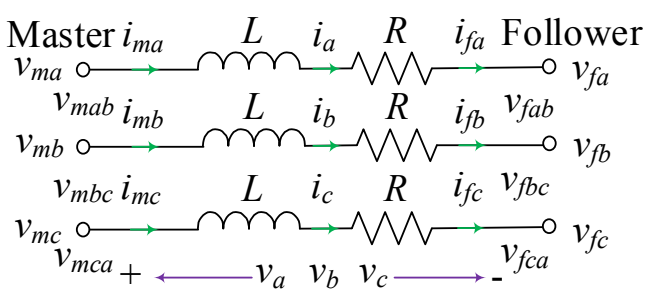

Fig. 3. Transmission line under normal conditions.

In this paper, the two terminals of transmission line are named as "Master" and "Follower", respectively. The Master side phase A, B and C to neutral voltages are named as v_{ma}, v_{mb} and v_{mc}, respectively. The Follower side phase A, B and C to neutral voltages are named as v_{fa}, v_{fb} and v_{fc}, respectively.

The Master side phase A to B, phase B to C and phase C to A voltages are named as v_{mab}, v_{mbc} and v_{mca}, respectively. The Follower side phase A to B, phase B to C and phase C to A voltages are named as v_{fab}, v_{fbc} and v_{fca}, respectively.

The Master side phase A, B and C currents are named as i_{ma}, i_{mb} and i_{mc}, respectively, with the corresponding current references i_{maref}, i_{mbref} and i_{mcref} from the transmission line model. The Follower side phase A, B and C currents are named as i_{fa}, i_{fb} and i_{fc}, respectively, with the corresponding current references i_{faref}, i_{fbref} and i_{fcref} from the transmission line model. The phase A, B and C voltages across the transmission line are named as v_a, v_b and v_c, respectively. The phase A, B and C currents flowing through the transmission line under normal conditions are named as i_a, i_b and i_c, respectively. The voltage and current positive directions are defined in Fig. 3.

In time domain, the transmission line is expressed as (1).

$$v_x = v_{mx} - v_{fx} = L\frac{di_x}{dt} + Ri_x \ (x = a, b, c) \tag{1}$$

By measuring the terminal voltages, the current references can be derived from (2).

$$i_{mxref} = i_{fxref} = i_{xref} = \int \frac{v_{mx} - v_{fx} - Ri_x}{L} dt \tag{2}$$

Thus, the transmission line model under normal operating conditions is derived as in Fig. 4.

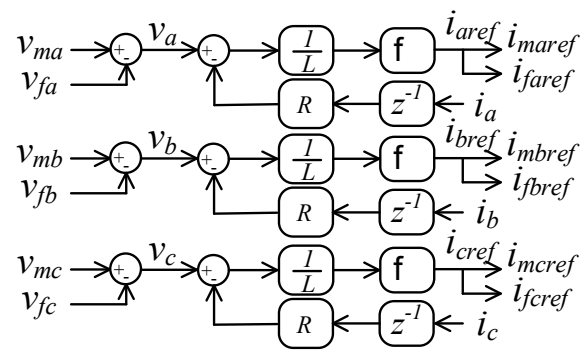

Fig. 4. Transmission line model under normal conditions.

Considering a three-phase short-circuit fault happens at the location "o", the transmission line during the fault is shown in Fig. 5. The parameter γ ($0 < \gamma < 1$) is the percentage of the distance from the location "o" to the Master side terminal with regard to the total line length.

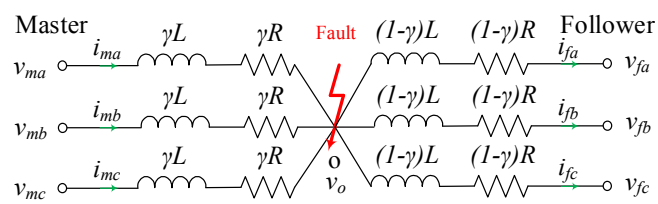

Fig. 5. Transmission line under three-phase short circuit faults.

Since the voltage of the three-phase short-circuit fault location equals to the imaginary neutral point voltage in the balanced three-phase system, the phase to neutral voltage equals to the phase to fault location voltage. Thus, the transmission line model can be expressed as (3).

$$\begin{cases} v_{mx} = \gamma L\dfrac{di_{mx}}{dt} + \gamma Ri_{mx} \\ v_{fx} = -(1-\gamma)L\dfrac{di_{fx}}{dt} - (1-\gamma)Ri_{fx} \end{cases} \quad (x = a, b, c) \tag{3}$$

By measuring the terminal voltages, the current references can be derived from (4).

$$\begin{cases} i_{mxref} = \int \dfrac{v_{mx} - \gamma R i_{mx}}{\gamma L} dt \\ i_{fxref} = \int \dfrac{-v_{fx} - (1-\gamma) R i_{fx}}{(1-\gamma) L} dt \end{cases} \tag{4}$$

Thus, the transmission line model under three-phase short-circuit fault conditions is shown in Fig. 6.

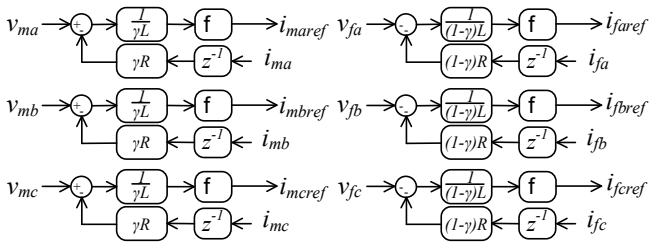

Fig. 6. Transmission line model under three-phase short-circuit faults.

According to the derived transmission line models for the balanced three-phase three-wire system, the transmission line performance under both normal and three-phase short-circuit fault conditions can be emulated by injecting currents on both sides of the transmission line, which track the current references calculated based on the measured voltages.

B. Smooth Switching between Normal and Fault States

Considering the ideal current tracking performance, the transmission line emulator main circuit can be simplified and represented as controlled current sources, as shown in Fig. 7.

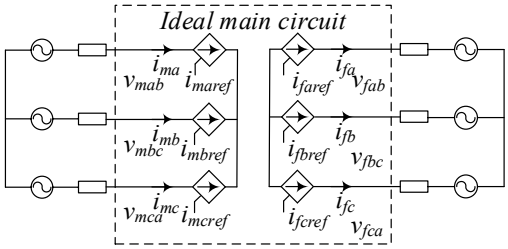

Fig. 7. Transmission line emulator ideal main circuit model.

By switching the controlled current source input references between the model under the normal state and the model under the fault state, the transmission line emulator can realize the emulations of both normal state and fault state.

However, at the switching moment, there can be current reference errors between the normal state and the fault state if the two models are calculated separately. The error introduces undesired transients, especially when the transmission line is in series with inductors, which cannot tolerate current step changes.

In this paper, a combined model is proposed to avoid the switching transients between the normal state and the fault state. Instead of switching the controlled current source input references, the inputs of the integral units for the current reference calculations are switched, as shown in Fig. 8, and then the normal and fault states are combined in one model.

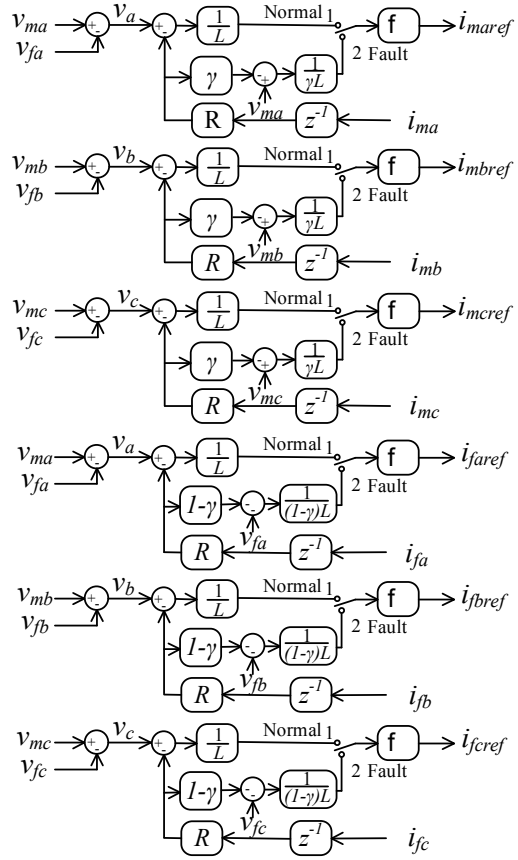

Fig. 8. Combined transmission line model.

III. Transmission Line Emulator Implementation in HTB

The system configuration of HTB with a transmission line emulator is shown in Fig. 9. The transmission line emulator is composed of two VSCs, which are named as Master and Follower in this paper. The Master and Follower VSCs also share the same dc link with the other HTB emulator VSCs.

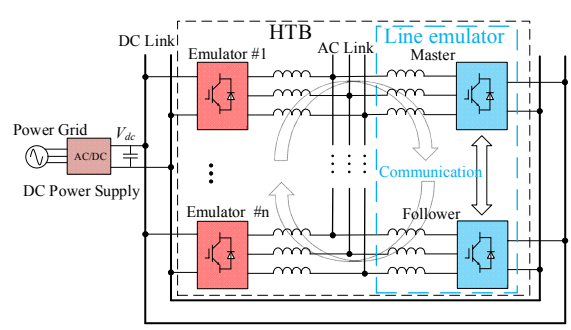

Fig. 9. System configuration of HTB with a transmission line emulator.

Both Master and Follower VSCs have their own controllers for current tracking control, as shown in Fig. 10. The transmission line model, which calculates the current references according to the terminal voltages, is located in the aster controller. The Follower side current references are calculated in the Master controller and sent to the Follower controller through dedicated communication.

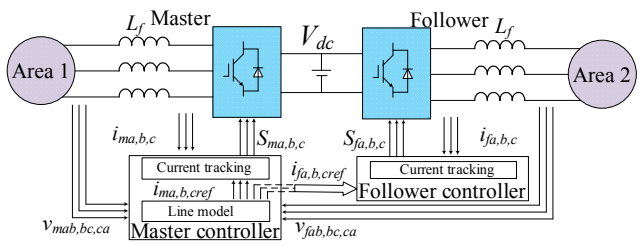

Fig. 10. Transmission line emulator structure.

IV. Simulation and Experiment Verification

A. Simulation Verification

A simplified two area system is developed to verify the transmission line fault emulation model in MATLAB Simulink, as shown in Fig. 11. The three-phase short-circuit fault happens at the middle point of the transmission line. Fig. 11(a) is the system simulation with the transmission line emulator, which is simulated by controlled current sources as the main-circuit models. Fig. 11(b) is the original simulation with the transmission line inductors and resistors for comparison. The same three-phase short circuit fault happens at 0.1s and 0.3s with 0.1s duration. The voltage and current comparisons of the simulated transmission line emulation case and the original simulation case are shown in Fig. 12. Fig. 12 (a), (b), (c) and (d) are the comparisons of the Master side line-to-line voltages, the Master side phase currents, the Follower side line-to-line voltages and the Follower side phase currents, respectively. The results indicate that the simulated transmission line emulation matches with the original transmission line well, which verifies the proposed transmission line fault emulation model.

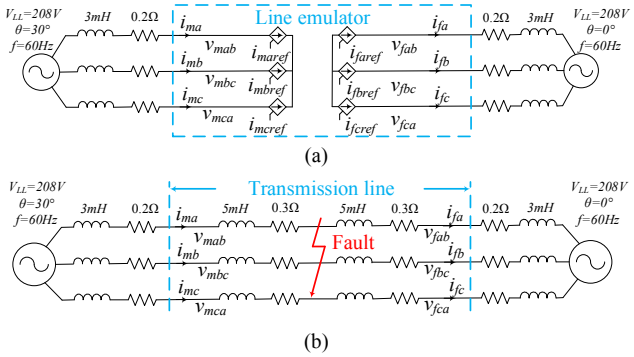

(a)

(b)

Fig. 11. Simulation verification: (a) Simulated transmission line emulator case; (b) Original simulation case with inductors and resistors.

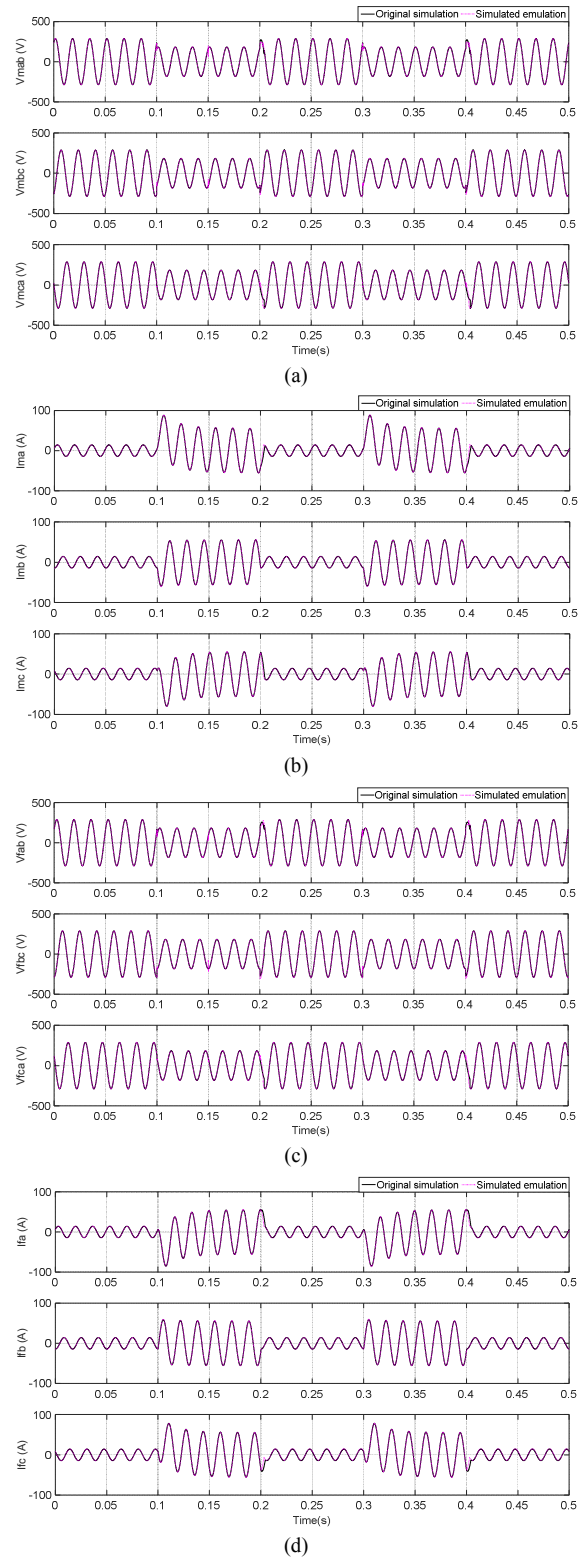

(a)

(b)

(c)

(d)

Fig. 12. Simulated transmission line emulation case and the original simulation case comparison: (a) Master side voltage; (b) Master side current; (c) Follower side voltage; (d) Follower side current.

B. *Experiment Verification*

The HTB platform for grid emulation with interconnected converters is shown in Fig. 13.

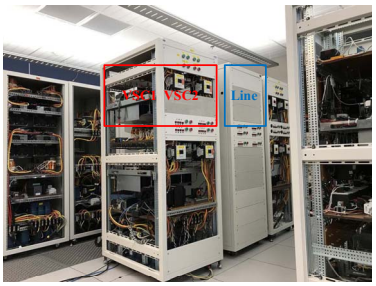

Fig. 13. HTB grid emulation platform.

In order to simplify the comparison, a transmission line connected between two ideal voltage sources is set up to verify the transmission line fault emulation, as shown in Fig. 14. The transmission line inductance and resistance are 12 mH and 0.3 Ω, respectively.

In HTB, the ideal voltage sources are realized by voltage source converters through maintaining the voltage magnitude with closed-loop control. The ideal voltage source frequency is kept at 60 Hz, but the angle can be modified manually through the Human Machine Interface (HMI) to change the power flow between the two sources.

Shown in Fig. 15 is the experimental verification platform setup based on HTB converters. The Master and Follower converters emulate the transmission line, and the VSC1 and VSC2 perform as the ideal voltage sources. Three fault scenarios with γ equals to 1/3, 1/2, and 2/3, respectively are tested to verify the three-phase short-circuit fault emulation capability at different locations within the emulated transmission line.

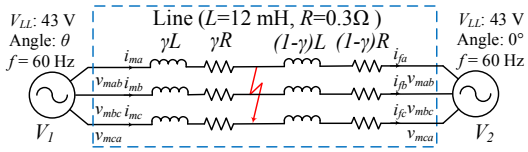

Fig. 14. System topology for experimental verification.

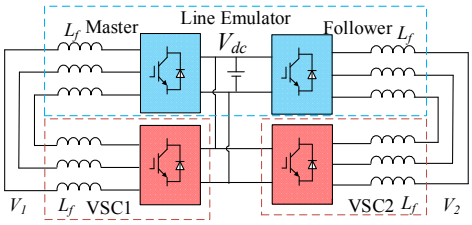

Fig. 15. Experimental verification platform setup.

1) Three-phase short-circuit fault with γ = 1/3

A three-phase short-circuit fault happens at 0.1 s at the location $\gamma = 1/3$ when the phase angle of V_{mab} is 170°. The angle difference between the two voltage sources is θ = -26°. The fault is cleared at 0.3 s. Shown in Fig. 16 is the comparison between experimental and simulation results. Fig. 16 (a), (b), (c) and (d) are the comparisons of V_{ab}, V_{bc}, I_a and I_b, respectively. According to the comparison, the experimental waveforms match with the simulation results well.

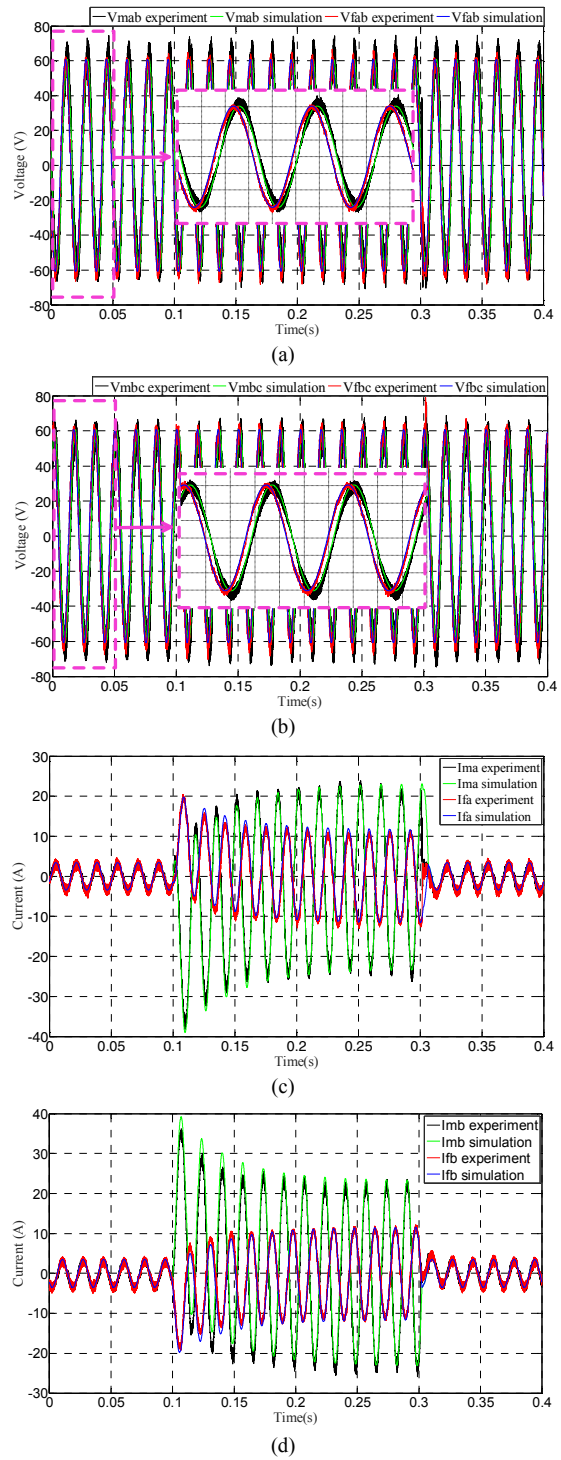

Fig. 16. Experiment and simulation comparison with $\gamma = 1/3$: (a) V_{ab}; (b)V_{bc}; (c) I_a; (d) I_b.

2) Three-phase short-circuit fault with γ = 1/2

A three-phase short-circuit fault happens at 0.1 s at the location $\gamma = 1/2$ when the phase angle of V_{mab} is 130°. The angle difference between the two voltage sources is θ = -32°. The fault is cleared at 0.3 s. Shown in Fig. 17 is the comparison between experimental and simulation results. Fig. 17 (a), (b), (c) and (d) are the comparisons of V_{ab}, V_{bc}, I_a and I_b, respectively. According to the comparison, the experimental waveforms match with the simulation results well.

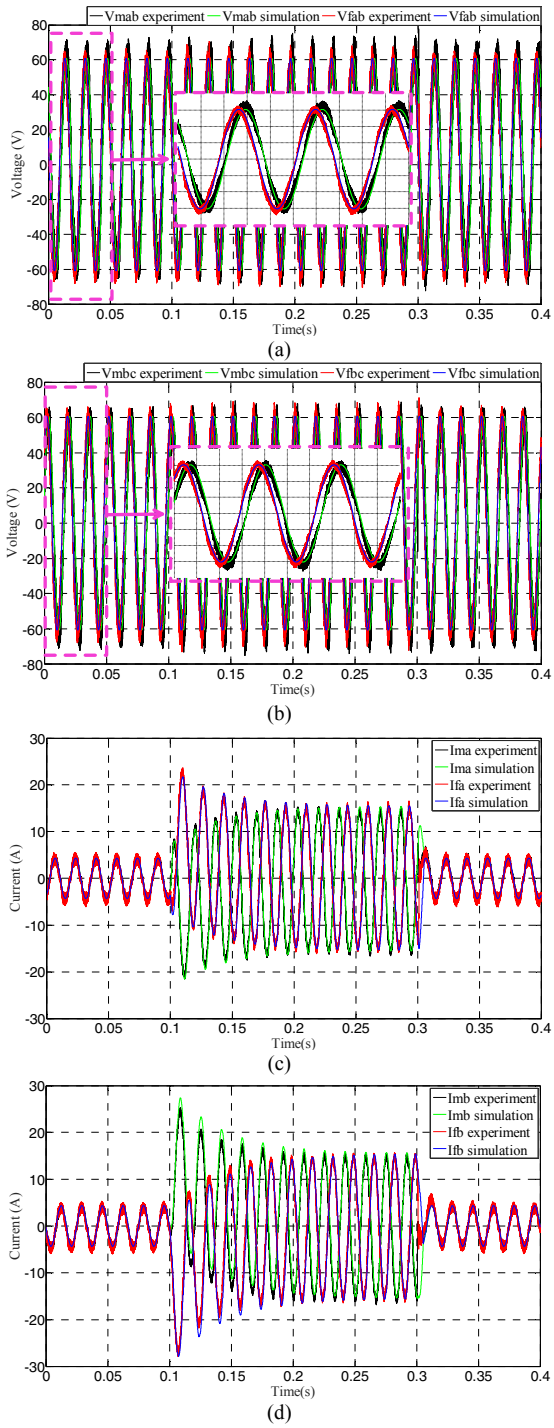

Fig. 17. Experiment and simulation comparison with $\gamma = 1/2$: (a) V_{ab}; (b)V_{bc}; (c) I_a; (d) I_b.

3) Three-phase short-circuit fault with γ = 2/3

A three-phase short-circuit fault happens at 0.1 s at the location $\gamma = 2/3$ when the phase angle of V_{mab} is 150°. The angle difference between the two voltage sources is θ = -22°. The fault is cleared at 0.3 s. Shown in Fig. 18 is the comparison between experimental and simulation results. Fig. 18 (a), (b), (c) and (d) are the comparisons of V_{ab}, V_{bc}, I_a and I_b, respectively. According to the comparison, the experimental waveforms match with the simulation results well.

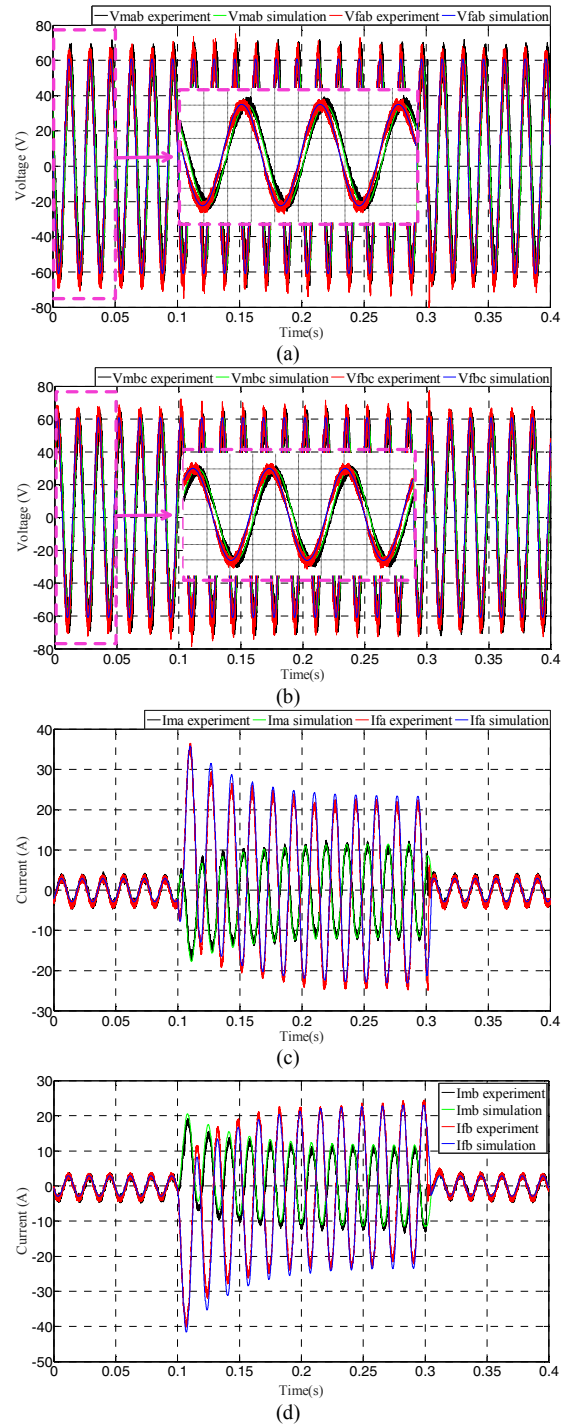

Fig. 18. Experiment and simulation comparison with $\gamma = 2/3$: (a) V_{ab}; (b)V_{bc}; (c) I_a; (d) I_b.

According to the above comparisons, the experiment waveforms match with the simulation waveforms when a three-phase short-circuit fault happens at the locations of γ equals to 1/3, 1/2, or 2/3, which verifies the three-phase short-circuit fault emulation capability of the developed transmission line emulator to represent a fault at different locations along the emulated transmission line.

V. CONCLUSIONS

A fault model has been proposed to realize the three-phase short-circuit fault emulation at different locations along the emulated transmission line. By switching the input of the integrator for current reference calculation, a combined transmission line model is proposed to avoid the switching transient between the normal and fault conditions. Both simulation and experiment results verified the proposed transmission line model through the comparison with the original transmission line simulation.

In the future, different system scenarios will be tested in the HTB environment with the fault emulation capability of transmission line emulator.

ACKNOWLEDGMENT

This work was supported primarily by the Engineering Research Center Program of the National Science Foundation and the Department of Energy under NSF Award Number EEC-1041877 and the CURENT Industry Partnership Program.

REFERENCES

[1] J. Wang, L. Yang, Y. Ma, X. Shi, X. Zhang, L. Hang, K. Lin, L. M. Tolbert, F. Wang, and K. Tomsovic, "Regenerative power converters representation of grid control and actuation emulator," in *2012 IEEE Applied Power Electronics Conference and Exposition (APEC)*, pp. 2460-2465.

[2] Y. Li, X. Shi, B. Liu, W. Lei, F. Wang, and L. M. Tolbert, "Development, demonstration, and control of a testbed for multiterminal HVDC system," in *IEEE Transactions on Power Electronics*, vol. 32, no. 8, pp. 6069-6078, Aug. 2017.

[3] Y. Li, X. Shi, B. Liu, F. Wang, L. M. Tolbert, and W. Lei, "Hardware implementation of a four-terminal HVDC test-bed," in *2015 IEEE Energy Conversion Congress and Exposition (ECCE)*, pp. 5365-5370.

[4] S. Zhang, Y. Ma, L. Yang, F. Wang, and L. M. Tolbert, "Development of a hybrid emulation platform based on RTDS and reconfigurable power converter-based testbed," in *2016 IEEE Applied Power Electronics Conference and Exposition (APEC)*, pp. 3121-3127.

[5] B. Liu, S. Sheng, Y. Ma, F. Wang, and L. M. Tolbert, "Control and implementation of converter based ac transmission line emulation," in *2015 IEEE Applied Power Electronics Conference and Exposition (APEC)*, pp. 1807-1814.

[6] B. Liu, S. Zhang, S. Zheng, Y. Ma, F. Wang, and L. M. Tolbert, "Design consideration of converter based transmission line emulation," in *2016 IEEE Applied Power Electronics Conference and Exposition (APEC)*, pp. 966-973.

[7] Y. Ma, L. Yang, F. Wang, and L. M. Tolbert, "Short circuit fault emulation by shunt connected voltage source converter," in *2015 IEEE Energy Conversion Congress and Exposition (ECCE)*, pp. 2622-2628.

[8] B. Gustavsen, "Frequency dependent transmission line modeling utilizing transposed conditions," in *IEEE Trans. Power Delivery*, vol. 17, no. 3, pp. 834-839, Jul. 2002.

[9] A. S. Leger, and C. O. Nwankpa, "Reconfigurable transmission line model for analog power flow computation," in 2005 Power System Computation Conference (PSCC), Liege, Belgium.

[10] S. Zhang, Y. Li, B. Liu, X. Shi, L. M. Tolbert, and F. Wang, "HVDC converter transformer saturation in hybrid AC/DC system caused by coupled transmission lines," in *2017 IEEE Applied Power Electronics Conference and Exposition (APEC)*, Tampa, FL, pp. 411-415.

[11] M. Taleb, M.J. Ditto, and T. Bouthiba, "Performance of short transmission lines models," in *Proc. IEEE GCC*, 2006, pp.1-7.

[12] R.C. Silva, S. Kurokawa, E.C.M. Costa, and J. Pissolato, "Development of a simplified transmission line model directly in the phase domain," in *Proc. IEEE PESGM*, 2012, pp. 1-8.

[13] Leger AS, "Transmission line modeling for the purpose of analog power flow computation of large scale power systems," Master Thesis, Drexel University, 2005.

[14] Y. Chen, and V. Dinavahi, "FPGA-based real-time EMTP," in *IEEE Transactions on Power Delivery*, vol. 24, no. 2, pp. 892-902, Apr. 2009.

[15] Y. Chen, and V. Dinavahi, "An iterative real-time nonlinear electromagnetic transient solver on FPGA," in *2011 IEEE Power and Energy Society General Meeting*, San Diego, CA, pp. 1-8.

[16] B. Asghari, and V. Dinavahi, "Real-time nonlinear transient simulation based on optimized transmission line modeling," in *IEEE Transactions on Power Systems*, vol. 26, no. 2, pp. 699-709, May 2011.

[17] Y. Chen, and V. Dinavahi, "Digital hardware emulation of universal machine and universal line models for real-time electromagnetic transient simulation," in *2012 IEEE Power and Energy Society General Meeting*, San Diego, CA, pp. 1-10.

[18] M. Chanaka, S. Kusum, and P. Ranjit, "Modeling of power transmission lines for lightning back flashover analysis (A case study: 220kV biyagama-kotmale transmission line)," in *Proc. IEEE ICIIS*, 2011, pp. 386-391.

[19] R. B. Canonico, V.A.F. Silva, A.J. Prado, S. Kurokawa, and L.F. Bovolato, "Simulations of electromagnetic transients in a transmission line using state variables," in *Proc. IEEE TDC-LA*, 2008, pp. 1-7.

[20] H.V. Nguyen, H.W. Dommel, and J.R. Marti, "Modeling of Single phase Non-uniform Transmission Lines in Electromagnetic Transient Simulations," in IEEE Trans. Power Delivery, vol. 12, no. 2, pp. 916-921, Apr. 1997.