10/12/23/91 WB (1)

CONTRACTOR REPORT

SAND88—7065
Unlimited Release
UC—814

Yucca Mountain Site Characterization Project

Documentation and Verification of the Shaft Code

C. M. St. John
formerly with J. F. T. Agapito & Associates, Inc.
715 Horizon Dr., Suite 340
Grand Junction, CO 81506

Prepared by Sandia National Laboratories Albuquerque, New Mexico 87185 and Livermore, California 94550 for the United States Department of Energy under Contract DE-AC04-76DP00789

Printed December 1991

"Prepared by Yucca Mountain Site Characterization Project (YMSCP) participants as part of the Civilian Radioactive Waste Management Program (CRWM). The YMSCP is managed by the Yucca Mountain Project Office of the U.S. Department of Energy, DOE Field Office, Nevada (DOE/NV). YMSCP work is sponsored by the Office of Geologic Repositories (OGR) of the DOE Office of Civilian Radioactive Waste Management (OCRWM)."

Issued by Sandia National Laboratories, operated for the United States Department of Energy by Sandia Corporation.

NOTICE: This report was prepared as an account of work sponsored by an agency of the United States Government. Neither the United States Government nor any agency thereof, nor any of their employees, nor any of their contractors, subcontractors, or their employees, makes any warranty, express or implied, or assumes any legal liability or responsibility for the accuracy, completeness, or usefulness of any information, apparatus, product, or process disclosed, or represents that its use would not infringe privately owned rights. Reference herein to any specific commercial product, process, or service by trade name, trademark, manufacturer, or otherwise, does not necessarily constitute or imply its endorsement, recommendation, or favoring by the United States Government, any agency thereof or any of their contractors or subcontractors. The views and opinions expressed herein do not necessarily state or reflect those of the United States Government, any agency thereof or any of their contractors.

Printed in the United States of America. This report has been reproduced directly from the best available copy.

Available to DOE and DOE contractors from
Office of Scientific and Technical Information
PO Box 62
Oak Ridge, TN 37831

Prices available from (615) 576-8401, FTS 626-8401

Available to the public from
National Technical Information Service
US Department of Commerce
5285 Port Royal Rd
Springfield, VA 22161

NTIS price codes
Printed copy: A08
Microfiche copy: A01

Distribution
Category UC-814

SAND--88-7065

DE92 004786

SAND88-7065
Unlimited Release
Printed December, 1991

DOCUMENTATION AND VERIFICATION OF THE SHAFT CODE

by

C. M. St. John formerly with
J. F. T. Agapito & Associates, Inc.
Grand Junction, CO 81506

for

Sandia National Laboratories
Albuquerque, NM 87185

Under Sandia Contract: 42-0096

Sandia Contract Monitor
S. J. Bauer
Performance Assessment Application Division 6313

ABSTRACT

The SHAFT code incorporates equations to compute stresses in a shaft liner when the rock through which a shaft passes is subject to known three-dimensional states of stress or strain. The deformation modes considered are hoop deformation, axial deformation, and shear on a plane normal to the shaft axis. Interaction between the liner and the soil and rock is considered, and it is assumed that the liner is in place before loading is applied. This code is intended to be used interactively but creates a permanent record complete with necessary quality assurance information. The code has been carefully verified for the case of generalized plane strain, in which an arbitrary axial strain can be defined. It may also be used for plane stress analysis. Output is given in the form of stresses at selected sample points in the liner and the rock and a simple graphical representation of the distribution of stress through the liner.

DISTRIBUTION OF THIS DOCUMENT IS UNLIMITED

MASTER

This report was prepared under WBS Element 124231.

TABLE OF CONTENTS

Section		Page
1.0	INTRODUCTION	1-1
2.0	MATHEMATICAL MODELS AND NUMERICAL METHODS	2-1
	2.1 Nomenclature	2-1
	2.2 Structure and Numerical Procedures	2-2
	2.2.1 Geometric and Material Properties	2-2
	2.2.2 Uniform and Nonuniform Hoop Deformation Calculations	2-5
	2.2.3 Out-of-Plane Shear Calculations	2-5
	2.3 Flowcharts	2-6
	2.4 Component Models	2-6
	2.4.1 Hoop Deformation Submodel	2-10
	2.4.2 Out-of-Plane Shear Submodel	2-24
	2.4.3 Alternatives for Interaction Analysis	2-28
	2.5 Performance	2-30
3.0	USER'S MANUAL	3-1
	3.1 Function and Invocation of Options	3-1
	3.1.1 Selection of Hoop Deformation or Pure Shear Analysis	3-1
	3.1.2 Selection of Input for Stresses or Strains	3-1
	3.1.3 Selection of Plane Stress or Plane Strain	3-1
	3.1.4 Selection of Bonded or Unbonded Conditions at the Interface of the Liner and Medium	3-1
	3.1.5 Selection of Automatic or Manual Sampling	3-1
	3.2 Input and Output	3-2
	3.3 Sample Analyses	3-2
	3.3.1 Example 1—Static Loads	3-3
	3.3.2 Example 2—Seismic Load Combination	3-3
	3.3.3 Example 3—General Seismic Load Combination	3-9
	3.4 Software and Computer System Requirements	3-9
4.0	CODE VERIFICATION	4-1
	4.1 Consistency with Boundary Conditions—Hoop Deformation	4-1
	4.1.1 Bonding of the Liner and Medium	4-2
	4.1.2 Unbonded Interface of the Liner and Medium	4-2
	4.2 Consistency with Boundary Conditions—Shear Deformations	4-2

TABLE OF CONTENTS (Concluded)

Section		Page
4.2.1	Bonding of the Liner and Medium	4-2
4.2.2	Unbonded Interface of the Liner and Medium	4-6
4.3	Consistency with Solution for an Unlined Shaft	4-6
4.4	Consistency with Equations	4-9
4.5	Consistency with Finite-Element Analysis	4-10
4.5.1	Consistency with the VISCOT Finite-Element Code	4-10
4.5.2	Comparison with the JAC Finite-Element Code	4-15
5.0	**REFERENCES**	5-1
Appendix A—Verification Problems		A-1
Appendix B—Comparison with Finite-Element Codes		B-1
Appendix C—Source Code Listing		C-1
Appendix D—RIB and SEPDB Appendix		D-1

LIST OF TABLES

Table		Page
4-1	Geometry and Material Properties Assumed for the Verification Process	4-1
4-2	Results of Hoop Deformation Analysis of a Shaft with a Bonded Liner	4-3
4-3	Results of Hoop Deformation Analysis of a Shaft with an Unbonded Liner	4-4
4-4	Results of Out-of-Plane Shear Analysis of a Shaft with a Bonded Liner	4-5
4-5	Results of Out-of-Plane Shear Analysis of a Shaft with an Unbonded Liner	4-7
4-6	Results of Analysis of Hoop Deformation of an Unlined Shaft	4-8
4-7	Results of Analysis of Shear Deformation of an Unlined Shaft	4-9
4-8	Comparison of Manual and Shaft Calculations of Hoop Deformation Resulting From Pure Shear	4-11
4-9	Parameters Used to Perform a Comparison Between the Results Obtained from the SHAFT Code and the VISCOT Code	4-12
4-10	Results of Analysis of Displacements in a Lined Shaft Using the SHAFT Code and the VISCOT Finite-Element Code	4-13
4-11	Results of Analysis of Stresses in a Lined Shaft Using the SHAFT Code and the VISCOT Finite-Element Code	4-14
4-12	Results of Analysis of a Lined Shaft Using the SHAFT Code and the JAC Code—Stresses when the Liner is Bonded to the Medium	4-16
4-13	Results of Analysis of a Lined Shaft Using the SHAFT Code and the JAC Code—Stresses when Slip is Allowed Between the Liner and Medium	4-17

LIST OF FIGURES

Figure		Page
2-1	Coordinate Frames for Shaft Liner Analysis	2-3
2-2	Cartesian and Cylindrical Components of the Stress Tensor	2-4
2-3	Flowchart of Section 1 of SHAFT Code	2-7
2-4	Flowchart of Section 2 of SHAFT Code—Hoop Deformation Calculations	2-8
2-5	Flowchart of Section 3 of SHAFT Code—Shear Deformation Calculations	2-9
2-6	Decomposition of the Applied Stresses for Hoop Deformation Analysis	2-11
2-7	Definition of Applied Principal Stresses and their Relationship to Applied Stresses in Cartesian X-Y Framework	2-22
3-1	SHAFT Code Output: Example 1—Static Loads	3-4
3-2	Tangential Stresses on the Interior Face of the Shaft Liner in the Example Problem	3-6
3-3	SHAFT Code Output: Example 2—Seismic Load Combination	3-7
3-4	SHAFT Code Output: Example 3—Seismic Load Combination	3-10
4-1	Comparison of JAC and SHAFT Results of Hoop Stress with Slip Allowed Between the Liner and Medium and with Bonding Between the Liner and Medium	4-18

1.0 INTRODUCTION

This report documents the computer code, SHAFT, which calculates the stresses and displacements that may occur in and around a lined circular shaft as a consequence of stress changes in the surrounding rock (medium) after construction and installation of the liner. The documentation comprises a complete development of the equations upon which the code is based, a description of the computer code, a user's guide, and verification that the equations and computer code provide a correct solution to the posed problem. This document is intended to conform to standards defined by the Yucca Mountain Site Characterization Project (YMP) *Software Quality Assurance Plan.*

The SHAFT code is intended to assist design engineers in calculating the stresses and displacements in the liners of the shafts in a potential repository for radioactive waste. A design methodology, which incorporates the equations that form the basis of the SHAFT code, was developed as a part of the U. S. Department of Energy's (DOE) program for development of a repository in salt, and is documented in the *Salt Repository Program Shaft Design Guide* (Fluor Technology, Inc. et al., 1987). The equations and the code are also applicable to the YMP design methodology, as documented in the YMP "Preliminary Shaft Liner Design Criteria and Methodology Guide" (Richardson, 1990).

The SHAFT code is quite general and allows several options. In view of this generality, it is anticipated that the code will be used for purposes other than documented specifically herein. Potential users are strongly advised to study carefully Chapter 2 of this report before performing any analysis. In particular, they should be aware that it is implicit that any liner is installed before there is any change in the free-field stress state in the medium, but after the medium has adjusted locally to the creation of the cavity within which a liner is to be placed. This assumption is appropriate when calculating induced stresses and displacements caused by loads applied externally to the medium (e.g., by seismic or thermal loads). Care should be exercised if the code is to be used to evaluate stresses and deformations that may occur in a liner installed in a shaft or tunnel as the opening is advanced.

2.0 MATHEMATICAL MODELS AND NUMERICAL METHODS

The SHAFT code can be used to investigate the state of stress around a lined cylindrical shaft when the surrounding medium is subjected to specified stresses or strains and both the liner and the medium are assumed to be linearly elastic. Unlined shafts can be treated by choosing any arbitrary liner thickness, assigning identical properties to the liner and the medium, and selecting the option in which the liner is bonded to the medium. At the heart of the code are two interaction calculations: one dealing with deformation of the cross section of the shaft and axial displacements (hoop deformation), and the other with shear stresses on planes normal to the axis of the shaft (shear deformation). Emphasis is placed on calculation and presentation of the liner stresses because these stresses are important to design. However, stresses and displacements can be calculated for any point within the liner or medium.

2.1 Nomenclature

The following nomenclature is used in the derivation of the analytical solutions upon which the SHAFT code is based. Dimensions, coordinates, and displacements are defined as follows:

R = external radius of liner, or radius of shaft if unlined;
a = internal radius of liner, or shaft if unlined;
x, y = Cartesian coordinates in-plane of cross section;
z = axial coordinate (out-of-plane direction);
r, θ = cylindrical coordinates in-plane of cross section, relative to the x axis;
r, t = cylindrical coordinates in-plane of cross section, relative to the direction of the principal applied stress;
u, v = radial and tangential components of displacement;
w = axial component of displacement;
m = a/r;
M = r/a $(1/m)$; and
T = R/a.

The normal conventions for identifying the components of the stress and strain tensors are used throughout (Jaeger and Cook, 1969, Chapter 2). Stresses, strains, and elastic parameters are defined as follows:

$\sigma_x, \sigma_y, \tau_{xy}$ = in-plane stresses in Cartesian coordinate frame;
$\sigma_1, \sigma_3, \alpha$ = in-plane principal stresses and direction ($\alpha = \theta - t$);
σ_z = axial out-of-plane stress;
$\sigma_r, \sigma_t, \tau_{rt}$ = in-plane stresses in cylindrical coordinate frame;
$\varepsilon_x, \varepsilon_y, \gamma_{xy}$ = in-plane strains in Cartesian coordinate frame;
ε_z = out-of-plane strain;
$\varepsilon_r, \varepsilon_t, \gamma_{rt}$ = in-plane strains in cylindrical coordinate frame;
τ_{xz}, τ_{yz} = out-of-plane shear stresses in Cartesian coordinate frame;
$\tau_{rz}, \tau_{\theta z}$ = out-of-plane shear stresses in cylindrical coordinate frame;
γ_{xz}, γ_{yz} = out-of-plane shear strains in Cartesian coordinate frame;
$\gamma_{rz}, \gamma_{\theta z}$ = out-of-plane shear strains in cylindrical coordinate frame;
E = elastic modulus;
ν = Poisson's ratio;
G = shear modulus;
P = mean stress, $(\sigma_1 + \sigma_3)/2$; and
S = deviator stress, $(\sigma_1 - \sigma_3)/2$.

The following use of superscripts is applied to stresses, strains, displacements, and elastic properties:

none = quantity applies for the medium;
$'$ = quantity applied to the liner;
$\wedge$ = undisturbed free-field value of stress or strain;
$\sim$ = effective properties used on elastic parameters for plane strain analysis; and
$*$ = the case where the liner is not bonded to the rock mass.

The dimensions and coordinates are illustrated in Figure 2-1. The reference axis for the r, t polar coordinate frame is oriented at an angle, α, relative to the x axis in the Cartesian frame. The angle α also defines the direction of the free-field major principal stress from the shaft with respect to the x axis, which is the reference axis for the r, θ polar coordinate frame.

The components of the stress in the Cartesian and cylindrical coordinate frames are illustrated in Figure 2-2. The sign convention used is that compressive stresses are considered to be positive. To be consistent, positive displacements are defined to be in the negative direction of the coordinate system.

2.2 Structure and Numerical Procedures

The SHAFT code comprises three distinct parts. First, the geometry and material properties are defined. Second, loading associated with both uniform and nonuniform hoop deformation of the opening is considered. Third, loading associated with shear on a horizontal plane perpendicular to the shaft axis is considered. Each of these parts is discussed briefly below.

2.2.1 Geometric and Material Properties

The geometric properties are

R = radius of shaft without liner and
h = thickness of liner.

From this information, the internal radius (a) of the liner is calculated (R - h).

The material properties are

E = elastic modulus of medium,
ν = Poisson's ratio of medium,
E' = elastic modulus of liner, and
ν' = Poisson's ratio of liner.

Both the medium and liner are assumed to be linearly elastic. On that basis, the following material properties of the medium are derived:

G = shear modulus = $E/2\,(1+\nu)$ and
λ = Lame's constant = $\nu E/(1+\nu)(1-2\nu)$.
G' and λ' are the corresponding properties for the liner.

In addition, the user must select either plane stress or plane strain conditions and decide whether the liner is bonded to the medium. Finally, sample points at which stresses and displacements are to be calculated are entered unless the user has selected automatic sample point generation.

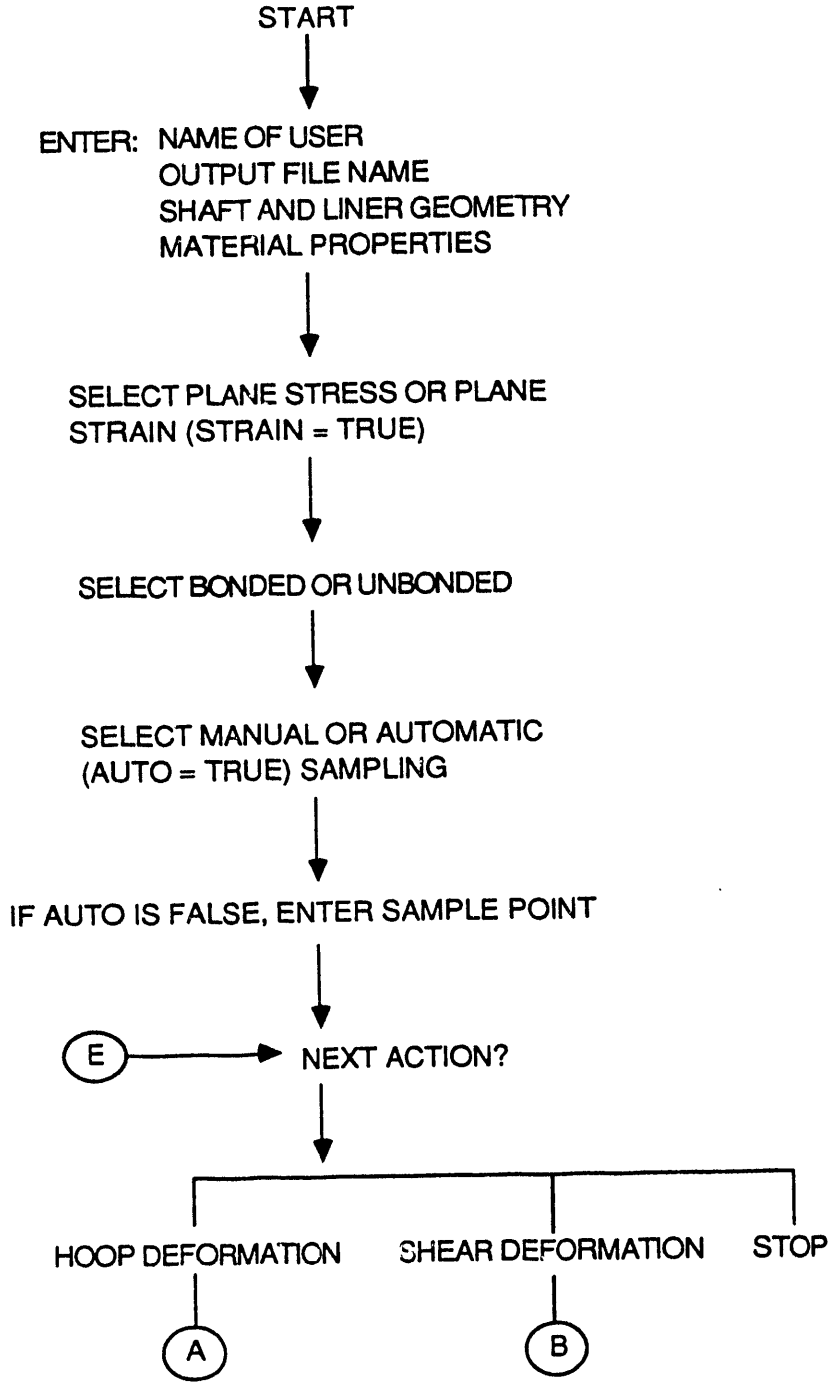

Figure 2-1. Coordinate Frames for Shaft Liner Analysis

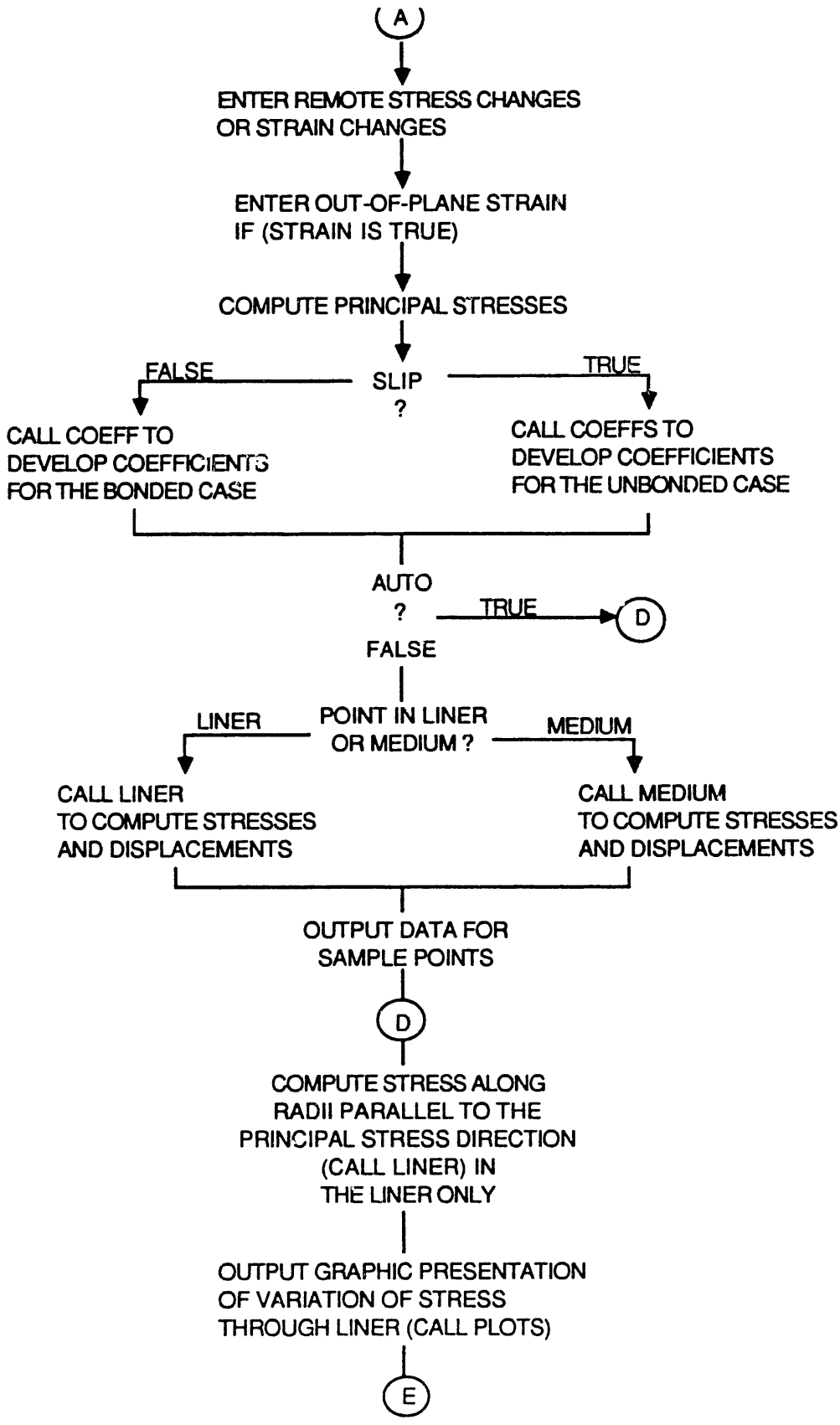

Figure 2-2. Cartesian and Cylindrical Components of the Stress Tensor

2.2.2 Uniform and Nonuniform Hoop Deformation Calculations

Input to the hoop deformation calculation can be as the change in either the stresses or strains in the free-field. If the stress input option is selected, then the user must supply the following information: $\hat{\sigma}_x$ (direct stress in x direction), $\hat{\sigma}_y$ (direct stress in y direction), and $\hat{\tau}_{xy}$ (xy shear stress). If the strain input option is selected, then the user must supply $\hat{\varepsilon}_x$ (direct strain in x direction), $\hat{\varepsilon}_y$ (direct strain in y direction), and $\hat{\gamma}_{xy}$ (xy shear strain), where $\hat{\gamma}_{xy}$ is the engineering shear strain, a value that is two times the tensor shear strain $\hat{\varepsilon}_{xy}$. The stresses corresponding to the input strains are calculated as

$$\hat{\sigma}_x = (2G + \lambda)\,\hat{\varepsilon}_x + \lambda\hat{\varepsilon}_y + \lambda\hat{\varepsilon}_z \quad , \tag{2-1}$$

$$\hat{\sigma}_y = \lambda\hat{\varepsilon}_x + (2G + \lambda)\,\hat{\varepsilon}_y + \lambda\hat{\varepsilon}_z \quad , \quad \text{and} \tag{2-2}$$

$$\hat{\tau}_{xy} = G\hat{\gamma}_{xy} \quad . \tag{2-3}$$

Here, $\hat{\varepsilon}_z$ is the out-of-plane strain. It is defined if plane strain conditions are selected. For the plane stress case, it is calculated from

$$\hat{\varepsilon}_z = -\frac{\lambda}{(\lambda + 2G)}(\hat{\varepsilon}_x + \hat{\varepsilon}_y) \quad . \tag{2-4}$$

Next, the major and minor principal stresses and their directions are calculated. These stresses and directions are input to the interaction analysis of the liner and medium and also define the direction for automatically generated sample lines.

After the state of stress away from the shaft is defined, the hoop deformation calculations are performed using equations derived later in this section to compute stresses and displacements at sample points inside the liner and the medium. Output may be given for user-selected points defined in a cylindrical coordinate system, in which the origin is defined relative to the x axis. Also, output is generated automatically for the liner along sample lines parallel to the major and minor principal stress directions. Those directions were selected because the stresses have their maximum and minimum values along those lines.

Although explicit forms of the interaction equations are provided in a later section, they are not used in the SHAFT code. Instead, a Gaussian elimination procedure is used to compute coefficients from the equations given. This approach allows alternative interface conditions or multiple-layer liners to be treated without additional algebraic manipulation.

2.2.3 Out-of-Plane Shear Calculations

The equations derived later in this section are used to calculate the deformation and shear stresses perpendicular to the axis of the shaft that are induced by shear stresses in directions outside the plane of the cross section of the shaft. These stresses are referred to as "out-of-plane" shear stresses. Input for these calculations comprises either the applied shear stresses, $\hat{\tau}_{xz}$ and $\hat{\tau}_{yz}$, or the applied shear strains, $\hat{\gamma}_{xz}$ and $\hat{\gamma}_{yz}$. These are stresses on planes perpendicular to the z axis in the direction of the x and y axes. The reference axis for output is the x axis, which does not necessarily coincide with the direction of the major principal stress determined as part of the hoop deformation calculation.

Again, output may be given for user-defined sample points and is always generated automatically. In this case, however, sample points through the liner are along radial lines parallel to the x and y axes.

2.3 Flowcharts

Figures 2-3 through 2-5 are a series of flowcharts that indicate the logic of the main program of the SHAFT code. The main program calls the following subroutines:

COEFF -- evaluates coefficients for hoop deformation equations when the liner is bonded to the medium;

COEFFS -- evaluates coefficients for the hoop deformation equations when the liner slips relative to the medium;

LINER -- calculates stresses and displacements in the liner using coefficients derived in COEFF or COEFFS;

LINSYS -- an equation solver that uses Gaussian elimination;

SHLIN -- calculates shear stresses and axial displacements in the liner caused by stresses in the cross section of the shaft;

SHMED -- calculates shear stresses and axial displacements in the medium caused by stresses in the cross section of the shaft; and

PLOT -- an output routine that provides a summary of the state of stress through the cross section of the liner, including a simple graphical display of the stress variation from inside to outside the liner.

Each of these subroutines is mathematically simple, consisting in most part of a direct transcription of the equations contained in this report and documented by comments in the computer code.

2.4 Component Models

The SHAFT code is based on solutions for the boundary value problem of a lined cylindrical cavity subjected to known stresses at a considerable distance from the cavity. The code is specifically intended for use when the shaft is long, and it may be assumed that displacements in the plane of the cross section of the shaft do not vary in the axial direction and that the axial strain has a constant value. (This condition corresponds to a generalization of the condition commonly referred to as plane strain, for which the axial strain is assumed to be zero.) To allow for consideration of an applied stress or strain field with principal axes that do not coincide with the shaft axis, a separate calculation of the effects of out-of-plane shear has been added. In addition to treating this generalized plane strain case, the SHAFT code can also analyze plane stress conditions.

The remainder of this section comprises a derivation of the equations incorporated in the SHAFT code. For convenience, the case of a lined cylindrical hole subjected to stresses in the plane of its cross section is treated first, and the case of an unlined shaft is treated as a special case. Because the first case is primarily concerned with changes in the circular shape of the shaft as it is subjected to loading, it is referred to as one of "hoop" deformation. The case of a cylindrical shaft subjected to out-of-plane shear stresses in the far-field is dealt with independently. This second case is concerned only with shear stresses because this type of loading does not cause any radial displacement. It is, therefore, referred to as the "out-of-plane" shear case. This separation is

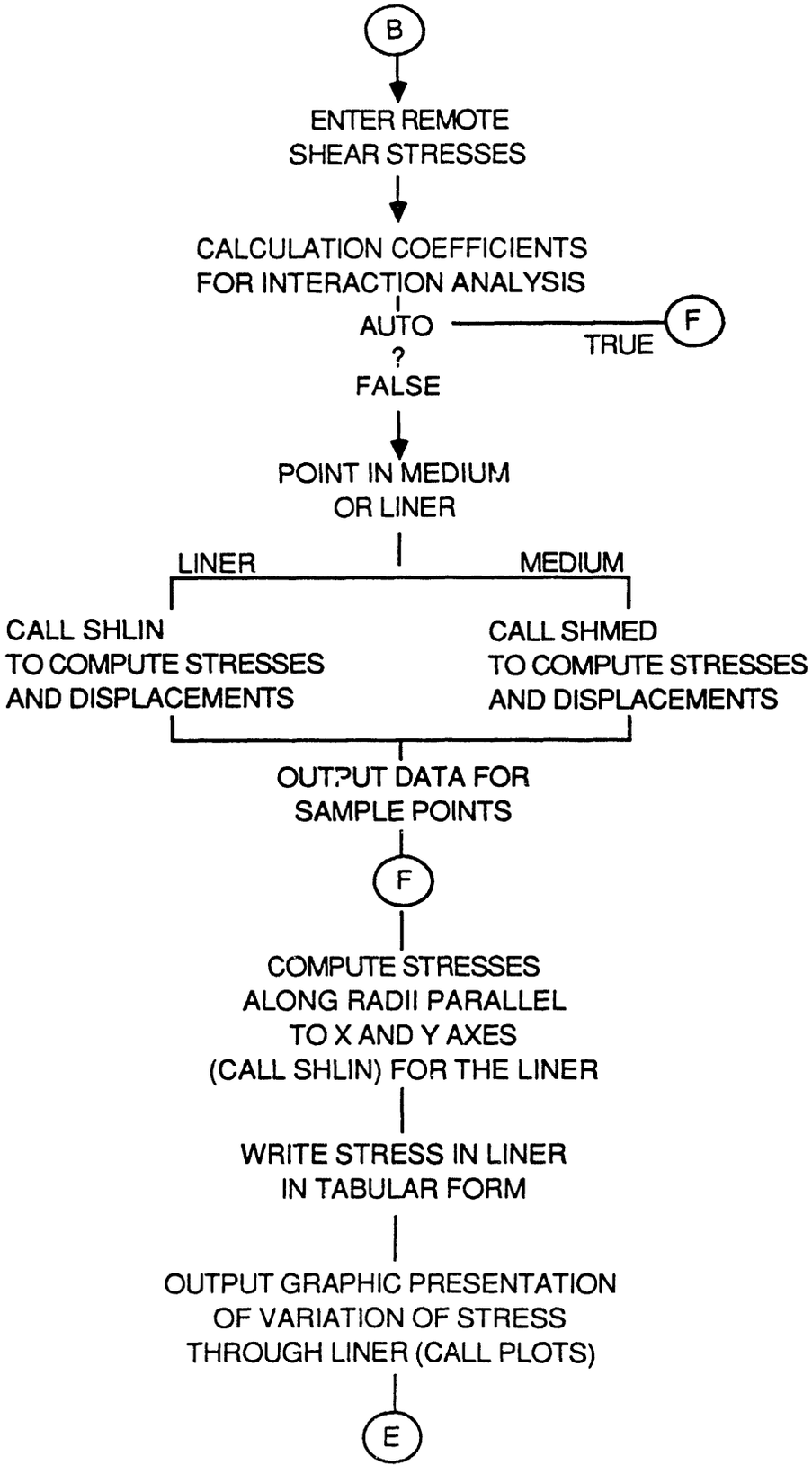

Figure 2-3. Flowchart of Section 1 of SHAFT Code

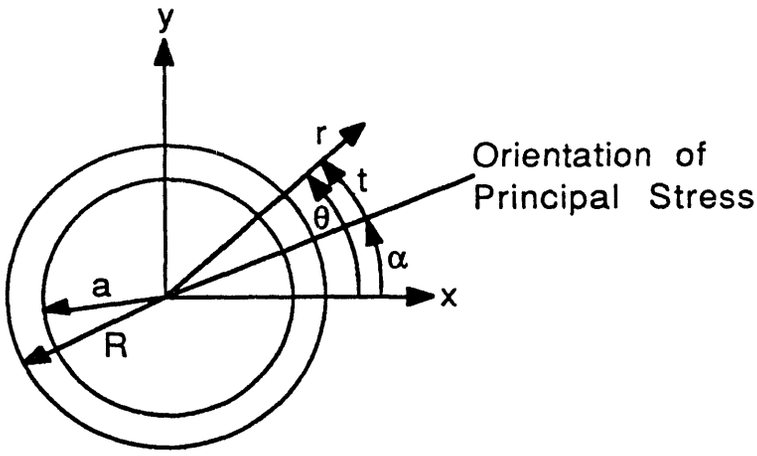

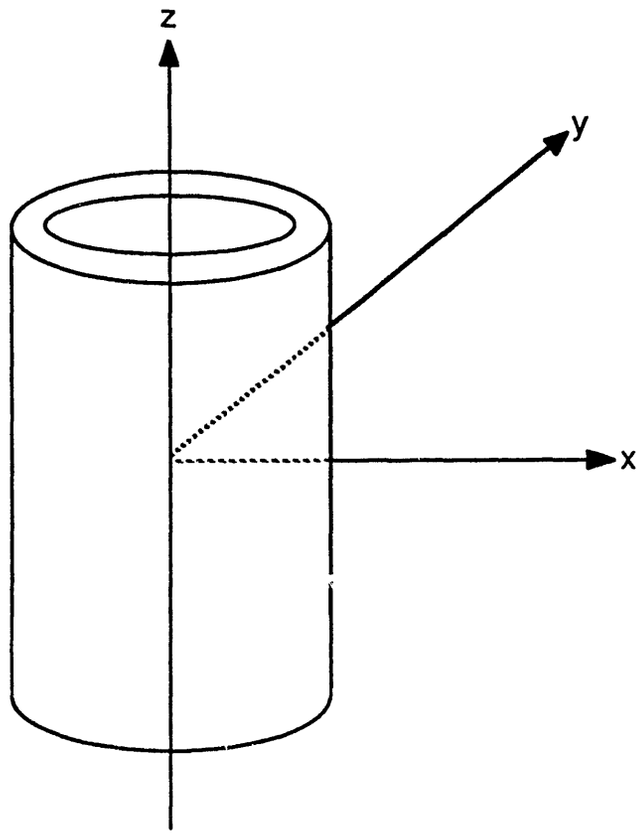

Figure 2-4. Flowchart of Section 2 of SHAFT Code—Hoop Deformation Calculations

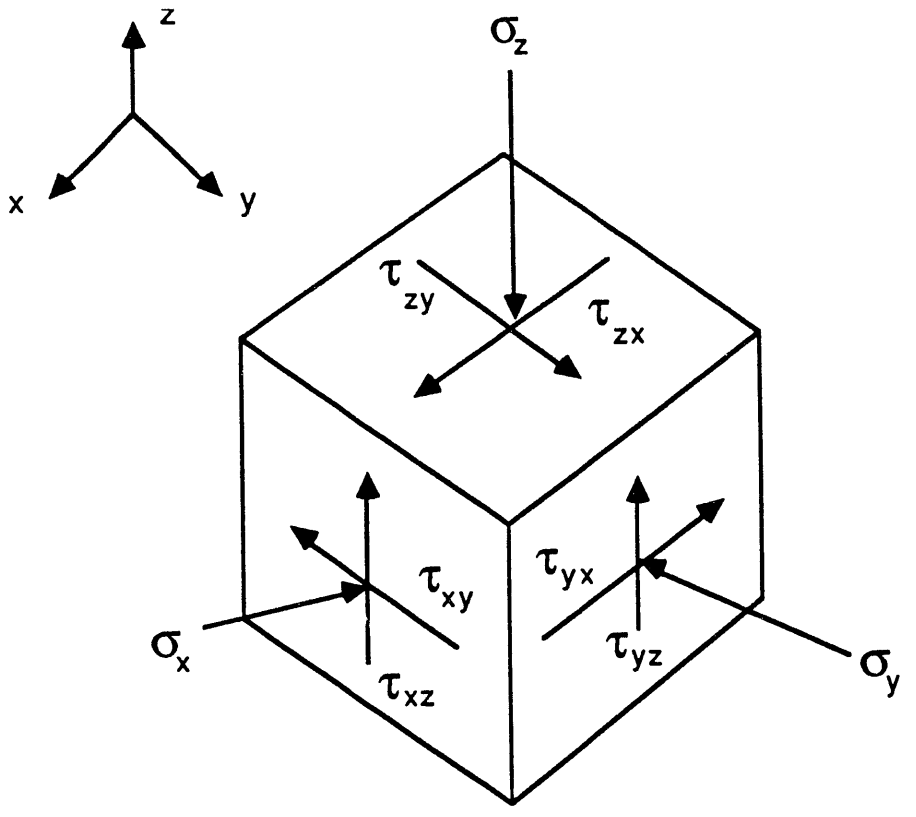

a) Cartesian Components

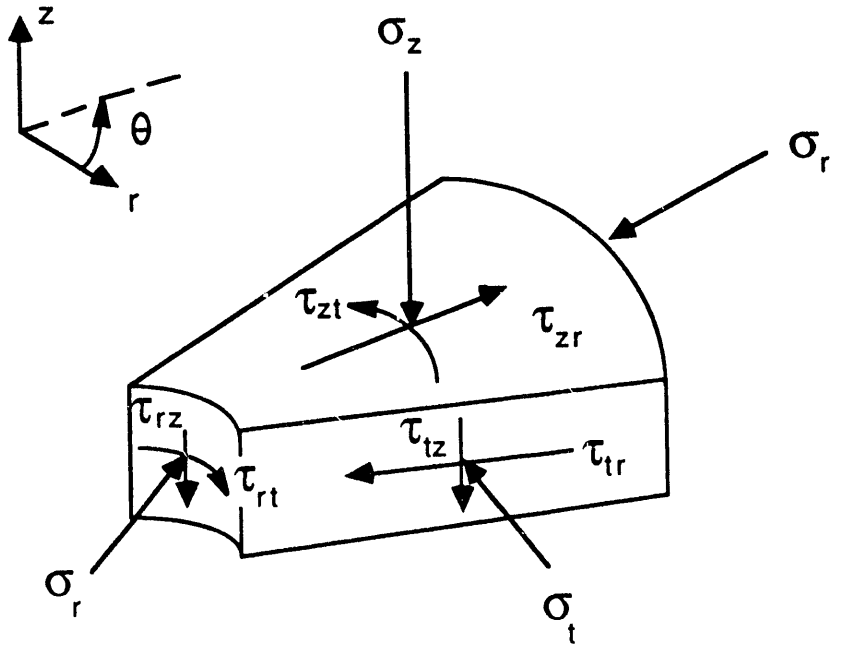

b) Cylindrical Components

Figure 2-5. Flowchart of Section 3 of SHAFT Code—Shear Deformation Calculations

reflected in the SHAFT code. However, the fact that both solutions are based on the assumptions of linear elasticity allows them to be superimposed to obtain the general solution to the problem of a lined cylindrical shaft in a medium subjected to any prescribed state of stress in the free-field.

2.4.1 Hoop Deformation Submodel

This section evaluates solutions related to the deformation of a lined or unlined cylindrical shaft subjected to a known change in the free-field stress. First, the assumptions necessary for the closed-form solutions are described. Second, the solutions are derived. The solutions are finally restated in a form that is consistent with that used in the SHAFT code.

Assumptions -- The key assumption for deriving the analytical solutions to the problems considered here is that the behavior of the liner and surrounding medium is linear elastic. This assumption allows classical solutions from the theory of elasticity to be used to investigate medium and liner response. It is also the basis for the superposition of several solutions that are derived here.

One of two alternative assumptions is made regarding the condition at the interface between the liner and the surrounding medium. One alternative assumes that there is complete bonding between the lining and the medium, while the other assumes the interface cannot sustain any shear stress. For both these conditions, which represent extreme limits of the shear strength of the interface, it is assumed that the liner and medium remain in contact, even if the normal stress at the interface is tensile.

Finally, the solutions depend on the assumption that the applied loads may be treated as static or pseudostatic. If the code is used to investigate the effect of transient loading, including seismic loading, then it is important to verify that the assumption of pseudostatic behavior is applicable. Typically, pseudostatic behavior of underground excavations is assumed to be adequate to model seismic behavior, provided that the dominant wavelengths of ground motion are long relative to the dimensions of the excavation in the direction of the wave propagation (St. John and Zahrah, 1987).

Analytical Solutions -- This section documents the solution for both lined and unlined cylindrical shafts. The analytical solution for hoop deformations for the lined shaft is treated in parts. First, the solution for an unlined shaft is stated. Second, the solution of a lined shaft is derived after the applied loads in the applied stress field are divided into two parts: (1) isotropic components and (2) deviator components. The division of the two components is illustrated in Figure 2-6. The solution for the lined shaft was originally derived by St. John et al. (1983) and was subsequently modified to account for the effect of out-of-plane or axial strain.

An Unlined Shaft

The stresses around a circular shaft in an infinite elastic medium are defined by the following well-known Kirsch solution (Jaeger and Cook, 1979, p. 250):

$$\sigma_r = \hat{P}(1 - m^2) + \hat{S}(1 - 4m^2 + 3m^4)\,cos2t \quad , \tag{2-5}$$

$$\sigma_t = \hat{P}(1 + m^2) - \hat{S}(1 + 3m^4)\cos 2t \quad , \quad \text{and} \tag{2-6}$$

$$\tau_{rt} = -\hat{S}(1 + 2m^2 - 3m^4)\sin 2t \quad . \tag{2-7}$$

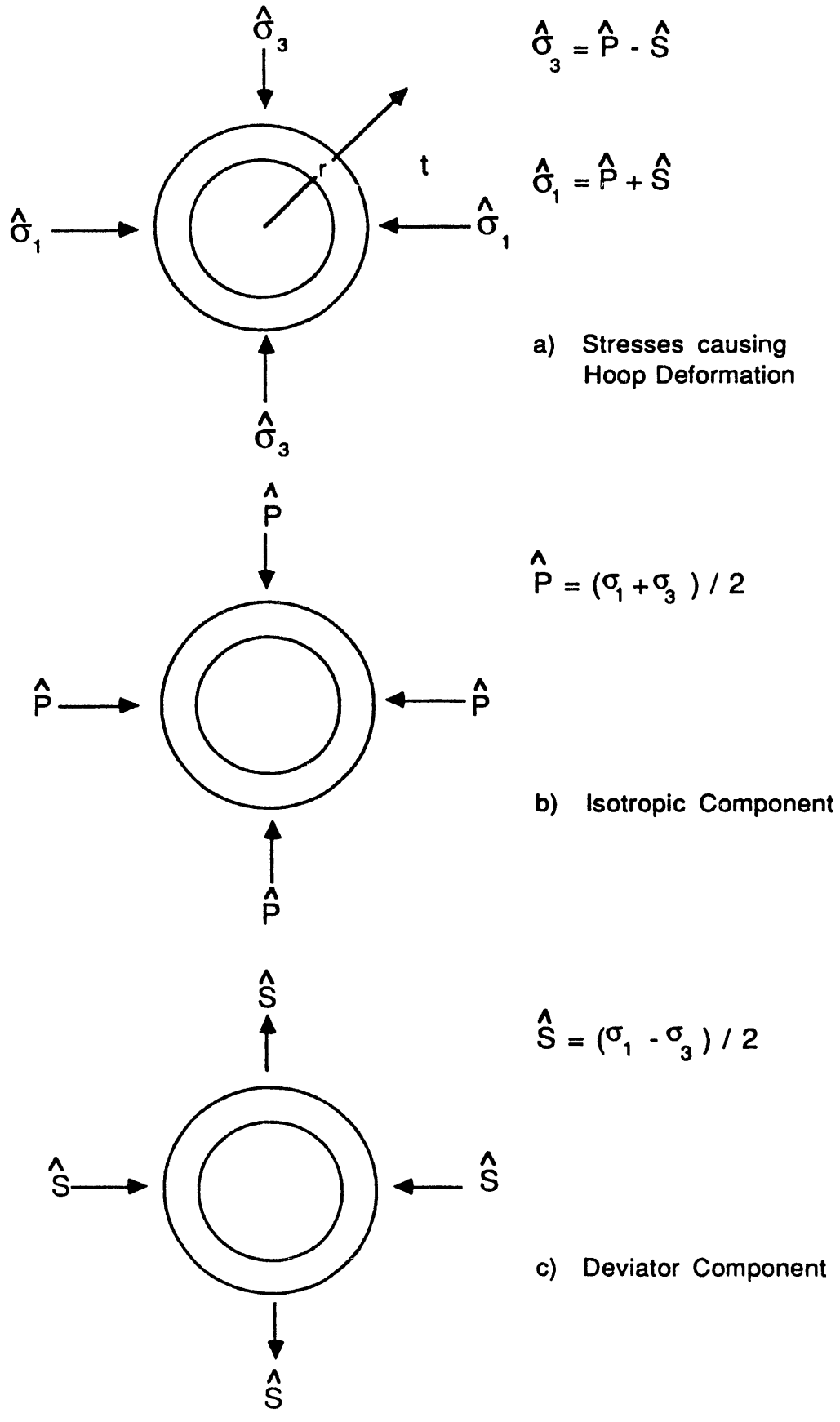

Figure 2-6. Decomposition of the Applied Stresses for Hoop Deformation Analysis

The nomenclature is defined in Section 2.1, where $\hat{P}$ and $\hat{S}$ are the mean and deviator stresses that are applied away from the shaft, m is the ratio of the shaft radius to the radial distance, and t is the angle relative to the direction of the major principal stress away from the shaft.

When no constraint is applied to out-of-plane deformation (plane stress conditions), the displacements corresponding to the applied stress field defined by $\hat{P}$ and $\hat{S}$ are given by

$$u = \frac{r}{E}([(1-\nu)+(1+\nu)m^2]\hat{P} + \{(1+\nu)+[4-(1+\nu)m^2\}m^2]\hat{S}\cos 2t) \quad \text{and} \tag{2-8}$$

$$v = -\frac{r}{E}\{(1+\nu)+[(3-\nu)-(1+\nu)(1-m^2)]m^2\}\hat{S}\sin 2t \quad . \tag{2-9}$$

Equations 2-8 and 2-9 apply to the case where the out-of-plane displacement is constrained (i.e., plane strain condition), provided that the following substitutions are made:

$E/(1-\nu^2)$ for E and
$\nu/(1-\nu)$ for ν.

To make it clear when these substitutions are to be made, the designations $\tilde{E}$ and $\tilde{\nu}$ are used from here on. (Equations 2-26 and 2-27 provide verification of this substitution.)

Equation 2-9, which defines circumferential displacement, also applies to the case in which there is an axial strain, ε_z, along the shaft, provided the appropriate substitution is made for E and ν (Jaeger and Cook, 1979, p. 252). For the radial displacements, an additional term equal to $-\nu\varepsilon_z r$ must be added to the right-hand side of Equation 2-8. Hence, the final form of the equation that defines the radial displacement resulting from applied stress $\hat{P}$ and $\hat{S}$ under conditions of prescribed axial strain is

$$u = \frac{r}{\tilde{E}}([(1-\tilde{\nu})+(1+\tilde{\nu})m^2]\hat{P} + \{(1+\tilde{\nu})+[4-(1+\tilde{\nu})m^2]m^2\}\hat{S}\,cos2t) - r\nu\varepsilon_z \quad . \tag{2-10}$$

The equivalent plane strain values have been used for the elastic parameters $\tilde{E}$ and $\tilde{\nu}$, but the additional term involves the unmodified value of the Poisson's ratio, ν.

The equations above include terms that are invariant with the cylindrical coordinate, t, and others terms that are functions of that coordinate. In fact, there are two distinct portions of these equations, one concerned with the isotropic component of the stress field and another concerned with the deviator component. For the case of the lined shaft, this separation is made at the outset, and solutions for the isotropic and deviator components illustrated by Figure 2-6 are obtained independently.

A Lined Shaft

Isotropic Component

The isotropic component of the applied stress field is illustrated in Figure 2-6(b). The solution to the problem of a lined shaft subjected to this loading has circular symmetry, and the following sets of equations (Beskin, 1944) define the stresses in the medium by

$$\sigma_r = \frac{A}{r^2} + P \quad , \quad \sigma_t = -\frac{A}{r^2} + P \quad , \quad \text{and} \quad \tau_{rt} = 0 \quad , \tag{2-11}$$

and in the liner by

$$\sigma'_r = \frac{A'}{r^2} + P' \quad , \quad \sigma'_t = -\frac{A'}{r^2} + P' \quad , \quad \text{and} \quad \tau_{rt} = 0 \quad . \tag{2-12}$$

In these equations, the coefficients A and A' are determined for a particular set of boundary conditions of concern. For the medium, the applied isotropic stress in the far-field as $r \rightarrow \infty$ is equal to $\hat{P}$. Substitution of this condition in Equation 2-11 gives

$$\sigma_r = \frac{A}{r^2} + \hat{P} \quad , \quad \sigma_t = -\frac{A}{r^2} + \hat{P} \quad , \quad \text{and} \quad \tau_{rt} = 0 \quad . \tag{2-13}$$

For the liner, the radial stress vanishes at the interior, where $r = a$. Substitution of this condition gives

$$\sigma'_r = \frac{A'}{r^2}(1 - M^2) \quad , \quad \sigma'_t = -\frac{A'}{r^2}(1+M^2) \quad , \quad \text{and} \quad \tau'_{rt} = 0 \quad , \tag{2-14}$$

where M is r/a.

Continuity of the radial stress, σ'_r, at the interface between the liner and the medium (i.e., at $r = R$) requires that

$$\frac{A}{R^2} - \frac{A'}{R^2}(1 - T^2) + \hat{P} = 0 \quad , \tag{2-15}$$

where T is R/a.

The displacements in the medium are given by

$$u = r\,\varepsilon_t \quad \text{and} \quad v = 0 \quad , \tag{2-16}$$

and in the liner by

$$u' = r\,\varepsilon'_t \quad \text{and} \quad v' = 0 \quad . \tag{2-17}$$

The hoop strains, ε_t and ε'_t, can be derived directly from the stresses using the stress-strain relationships based on Hooke's law for linearly elastic materials (Jaeger and Cook, 1979, p. 112). Specifically, for the medium

$$\varepsilon_t = \frac{1}{E}[\sigma_t - \nu(\sigma_r + \sigma_z)] \tag{2-18}$$

and a corresponding equation that defines the liner hoop strain, ε'_t.

For plane stress conditions, when $\sigma_z = 0$, substituting Equation 2-13 gives for the medium

$$u = -\frac{r}{E}\left[\frac{A}{r^2}(1+\nu) - \hat{P}(1-\nu)\right] \tag{2-19}$$

and for the liner

$$u' = -\frac{r}{E'}\frac{A'}{r^2}[(1+\nu') + M^2(1-\nu')] \quad . \tag{2-20}$$

The radial displacement must be continuous at the interface between the liner and medium (i.e., at $r = R$), which gives the condition

$$\frac{1}{E}\left[\frac{A}{R^2}(1+\nu) - \hat{P}(1-\nu)\right] = \frac{1}{E'}\frac{A'}{R^2}[(1+\nu') + T^2(1-\nu')] \quad . \tag{2-21}$$

Equations 2-15 and 2-21 are simultaneous equations in the unknown coefficients A and A'. Their solutions are

$$A = \frac{-\hat{P}R^2\left\{(1-\nu)(1-T^2) + \frac{E}{E'}[(1+\nu') + T^2(1-\nu')]\right\}}{\frac{E}{E'}[(1+\nu') + T^2(1-\nu')] - (1+\nu)(1-T^2)} \quad \text{and} \tag{2-22}$$

$$A' = \frac{-2\hat{P}R^2}{\frac{E}{E'}[(1+\nu') + T^2(1-\nu')] - (1+\nu)(1-T^2)} \quad . \tag{2-23}$$

For the case in which the out-of-plane strain has a prescribed value, ε_z, the solution is similar, but σ_z is no longer zero. From the equations of elasticity,

$$\varepsilon_z = \frac{1}{E}[\sigma_z - \nu(\sigma_r + \sigma_t)] \quad , \tag{2-24}$$

hence,

$$\sigma_z = \nu(\sigma_r + \sigma_t) + E\varepsilon_z \quad . \tag{2-25}$$

Substitution in Equation 2-18 yields

$$\varepsilon_t = \frac{(1-\nu^2)}{E}\left[\sigma_t - \frac{\nu}{(1-\nu)}\sigma_r\right] - \nu\varepsilon_z \tag{2-26}$$

or, using the nomenclature defined earlier (Section 2.1),

$$\varepsilon_t = \frac{1}{\tilde{E}}(\sigma_t - \tilde{\nu}\sigma_r) - \nu\varepsilon_z \quad . \tag{2-27}$$

For the medium, the radial displacements are defined as

$$u = -\frac{r}{\bar{E}}\left[\frac{A}{r^2}(1+\tilde{\nu}) - \hat{P}(1-\tilde{\nu})\right] - r\nu\varepsilon_z \quad , \tag{2-28}$$

and for the liner as

$$u' = -\frac{r}{\bar{E}'}\frac{A'}{r^2}[(1+\tilde{\nu}') + M^2(1-\tilde{\nu}')] - r\nu'\varepsilon_z \quad . \tag{2-29}$$

Using the requirement for continuity of the radial displacement at the interface between the liner and the medium (i.e., at $r = R$),

$$\frac{1}{\bar{E}}\left[\frac{A}{R^2}(1+\tilde{\nu}) - \hat{P}(1-\tilde{\nu})\right] + \nu\varepsilon_z = \frac{1}{\bar{E}'}\frac{A'}{R^2}[(1+\tilde{\nu}') + T^2(1-\tilde{\nu}')] + \nu'\varepsilon_z \quad , \tag{2-30}$$

where it is assumed that the medium and liner undergo the same axial strain, ε_z.

The unknown coefficients in this case are obtained by solving the simultaneous Equations 2-15 and 2-30. The solution for the unknown coefficient A is

$$A = \frac{-\hat{P}R^2\left\{(1-\tilde{\nu})(1-T^2) + \frac{\bar{E}}{\bar{E}'}[(1+\tilde{\nu}') + T^2(1-\tilde{\nu}')]\right\} - BR^2\varepsilon_z}{\frac{\bar{E}}{\bar{E}'}[(1+\tilde{\nu}') + T^2(1-\tilde{\nu}')] - (1+\tilde{\nu})(1-T^2)} \quad , \tag{2-31}$$

where

$$B = \bar{E}(\nu' - \nu)(1-T^2) \quad . \tag{2-32}$$

The solution for the unknown coefficient A' is

$$A' = \frac{-2\hat{P}R^2 - B'R^2\varepsilon_z}{\frac{\bar{E}}{\bar{E}'}[(1+\tilde{\nu}') + T^2(1-\tilde{\nu}')] - (1+\tilde{\nu})(1-T^2)} \quad , \tag{2-3}$$

where

$$B' = \bar{E}(\nu' - \nu) \quad . \tag{2-34}$$

Equations 2-31 and 2-33 are identical to the plane stress case (Equations 2-22 and 2-33), with the exception of the substitution of the effective elastic properties and the addition of the terms involving B and B'. Thus, plane stress can be treated as a special case, where B and B' are zero and the unmodified values of the elastic parameters are used. Pure plane strain is another special case, where $\varepsilon_z = 0$.

A Lined Shaft

Deviator Component

The following general solution corresponds to the symmetry of the problem of a lined shaft subjected to a deviator stress in the far-field (Beskin, 1944):

$$\sigma_r = -\left(H + \frac{C}{r^4} + \frac{2D}{r^2}\right) cos2t \quad , \tag{2-35}$$

$$\sigma_t = \left(H + \frac{C}{r^4} + 2Fr^2\right) cos2t \quad , \tag{2-36}$$

$$\tau_{rt} = \left(H - \frac{C}{r^4} - \frac{D}{r^2} + Fr^2\right) sin2t \quad , \tag{2-37}$$

$$u = \frac{r}{E}\left[-H(1+\nu) + \frac{C}{3r^4}(1+\nu) + \frac{2D}{r^2} - \frac{2\nu Fr^2}{3}\right] cos2t \quad , \text{ and} \tag{2-38}$$

$$v = \frac{r}{E}\left[H(1+\nu) + \frac{C}{3r^4}(1+\nu) - \frac{D}{r^2}(1-\nu) + \frac{(3+\nu)}{3}Fr^2\right] sin2t \quad , \tag{2-39}$$

where F, H, C, and D are constants that must be determined for a given set of problem boundary conditions. This load case is illustrated in Figure 2-6(c) and comprises the application of a remote deviator stress, $\hat{S}$. This boundary condition implies that $H = -\hat{S}$ and $F = 0$ for Equations 2-35 and 2-36. The medium stresses and displacements resulting from the applied shear stress can be expressed in terms of two unknown coefficients, C and D. The solution is as follows:

$$\sigma_r = \left(\hat{S} - \frac{C}{r^4} - \frac{2D}{r^2}\right) cos2t \quad , \tag{2-40}$$

$$\sigma_t = \left(-\hat{S} + \frac{C}{r^4}\right) cos2t \quad , \tag{2-41}$$

$$\tau_{rt} = \left(-\hat{S} - \frac{C}{r^4} - \frac{D}{r^2}\right) sin2t \quad , \tag{2-42}$$

$$u = \frac{r}{E}\left[\hat{S}(1+\nu) + \frac{C}{3r^4}(1+\nu) + \frac{2D}{r^2}\right] cos2t \quad , \text{ and} \tag{2-43}$$

$$v = \frac{r}{E}\left[-\hat{S}(1+\nu) + \frac{C}{3r^4}(1+\nu) - \frac{D}{r^2}(1-\nu)\right] \sin 2t \quad . \tag{2-44}$$

The same general solution given by Equations 2-35 through 2-39 applies for the liner. In this case, the radial and shear stresses, σ'_r and τ'_{rt}, vanish at the interior surface. Using the appropriate notation to indicate liner conditions, these two boundary conditions give

$$H' = -\frac{C'}{a^4} - \frac{2D'}{a^2} \text{ and} \tag{2-45}$$

$$F' = \frac{2C'}{a^6} + \frac{3D'}{a^4} \quad . \tag{2-46}$$

The liner equations can be written in terms of unknown coefficients C' and D' to obtain the following solutions:

$$\sigma'_r = \left[\frac{C'}{r^4}(M^4 - 1) + \frac{2D'}{r^2}(M^2 - 1) \right] cos2t, \tag{2-47}$$

$$\sigma'_t = \left[\frac{C'}{r^4}(1 - M^4 + 4M^6) + \frac{2D'}{r^2}(3M^4 - M^2) \right] cos2t \quad , \tag{2-48}$$

$$\tau'_{rt} = \left[\frac{C'}{r^4}(2M^6 - M^4 - 1) + \frac{D'}{r^2}(3M^4 - 2M^2 - 1) \right] sin2t \quad , \tag{2-49}$$

$$u' = \frac{r}{E'}\left\{ \frac{C'}{3r^4}[(3M^4 + 1)(1 + \nu') - 4\nu' M^6] + \frac{2D'}{r^2}[1 + (1 + \nu')M^2 - \nu' M^4] \right\} cos2t \quad \text{, and} \tag{2-50}$$

$$v' = \frac{r}{E'}\{ \frac{C'}{3r^4}[(6 + 2\nu')M^6 - (3M^4 - 1)(1 + \nu')]$$

$$+ \frac{D'}{r^2}[(3 + \nu')M^4 - (1 - \nu') - (2 + 2\nu')M^2]\} sin2t \quad . \tag{2-51}$$

The coefficients C, D, C', and D' are determined from the general equations for the medium and the liner through consideration of the radial and shear stresses and the displacements at the interface of the liner and the medium.

The requirements for continuity of the radial stress at the interface are considered first. Given the appropriate substitution in Equations 2-40 and 2-47, the following is obtained:

$$\frac{C}{R^4} + \frac{2D}{R^2} + \frac{C'}{R^4}(T^4 - 1) + \frac{2D'}{R^2}(T^2 - 1) = \hat{S} \quad . \tag{2-52}$$

This equation is valid for both bonded and unbonded conditions because the assumption has been made that no gap exists between the liner and the surrounding medium.

In the case where the liner is bonded to the medium, the shear stress in the liner and medium are the same at the interface. From Equations 2-42 and 2-49, which describe the in-plane shear stress in the medium and liner, respectively,

$$\frac{C}{R^4} + \frac{D}{R^2} + \frac{C'}{R^4}(2T^6 - T^4 - 1) + \frac{D'}{R^2}(3T^4 - 2T^2 - 1) = -\hat{S} \quad . \tag{2-53}$$

If there is slip and no shear stress is transmitted at the interface, then

$$\frac{C}{R^4}+\frac{D}{R^2}=-\hat{S} \quad , \tag{2-54}$$

and

$$\frac{C'}{R^4}(2T^6-T^4-1)+\frac{D'}{R^2}(3T^4-2T^2-1)=0 \quad . \tag{2-55}$$

Because the assumption has been made that the liner remains in contact with the medium, the radial displacement must be continuous at the interface. From Equations 2-43 and 2-50, which describe the radial displacement of the medium and the liner,

$$\frac{C}{R^4}+\frac{6D}{R^2(1+\nu)}+\frac{EC'}{E'(1+\nu)R^4}[4\nu' T^6-(3T^4+1)(1+\nu')]$$

$$+\frac{E}{E'(1+\nu)R^2}\frac{6D'}{R^2}[\nu' T^4-(1+\nu')T^2-1]=-3\hat{S} \quad . \tag{2-56}$$

Like Equation 2-52, this equation is valid for both bonded and unbonded conditions.

From Equations 2-44 and 2-51, if there is complete bonding and continuity of tangential displacement, then

$$\frac{C}{R^4}-\frac{3D}{R^2}\frac{(1-\nu)}{(1+\nu)}+\frac{E}{E'(1+\nu)}\frac{C'}{R^4}[(3T^4-1)(1+\nu')-(6+2\nu')T^6]$$

$$+\frac{3E}{E'(1+\nu)}\frac{D'}{R^2}[2T^2(1+\nu')+(1-\nu')-(3+\nu')T^4]=3\hat{S} \quad . \tag{2-57}$$

Equations 2-52, 2-53, 2-56, and 2-57 are solved simultaneously to obtain the coefficients C, D, C', and D' for the bonded case. If there is no bond, then there is no restriction on the shear displacements and Equations 2-52, 2-54, 2-55, and 2-56 define the coefficients. Reordering the appropriate equations in a convenient form for solving the bonded case results in the following.

$$\begin{vmatrix} 1 & 2 & (T^4-1) & 2(T^2-1) \\ 1 & 1 & (2T^6-T^4-1) & (3T^4-2T^2-1) \\ 1 & \frac{6}{(1+\nu)} & \frac{E}{E'(1+\nu)}[4\nu' T^6-(3T^4+1)(1+\nu')] & \frac{6E}{E'(1+\nu)}[\nu' T^4-(1+\nu')T^2-1] \\ 1 & -\frac{3(1-\nu)}{(1+\nu)} & \frac{E}{E'(1+\nu)}[(3T^4-1)(1+\nu')-(6+2\nu')T^6] & \frac{3E}{E'(1+\nu)}[2T^2(1+\nu')+(1-\nu')-(3+\nu')T^4] \end{vmatrix} \begin{vmatrix} \frac{C}{R^4} \\ \frac{D}{R^2} \\ \frac{C'}{R^4} \\ \frac{D'}{R^2} \end{vmatrix} = \begin{vmatrix} \hat{S} \\ -\hat{S} \\ -3\hat{S} \\ 3\hat{S} \end{vmatrix} \tag{2-58}$$

The following must be solved for the unbonded case.

$$\begin{vmatrix} 1 & 2 & (T^4-1) & 2(T^2-1) \\ 1 & 1 & 0 & 0 \\ 0 & 0 & (2T^6-T^4-1) & (3T^4-2T^2-1) \\ 1 & \frac{6}{(1+\nu)} & \frac{E}{E'(1+\nu)}[4\nu' T^6-(3T^4+1)(1+\nu')] & \frac{6E}{E'(1+\nu)}[\nu' T^4-(1+\nu')T^2-1] \end{vmatrix} \begin{vmatrix} \frac{C}{R^4} \\ \frac{D}{R^2} \\ \frac{C'}{R^4} \\ \frac{D'}{R^2} \end{vmatrix} = \begin{vmatrix} \hat{S} \\ -\hat{S} \\ 0 \\ -3\hat{S} \end{vmatrix} \tag{2-59}$$

Equations 2-58 and 2-59 can be solved very simply using either Gaussian elimination or algebraic manipulation. For the bonded case

$$C' = 12\hat{S}\,[(1+\nu)T^4 - (2F_3 + F_4 + 1 + \nu)]\frac{R^4}{\Delta} \quad , \tag{2-60}$$

$$D' = 4\hat{S}\,\{-2(1+\nu)T^6 + [F_1 + F_2 + 2(1+\nu)]\}\frac{R^2}{\Delta} \quad , \tag{2-61}$$

$$C = -3\hat{S}\,R^4 - (4T^6 - 3T^4 - 1)C' - 6T^2(T^2-1)D'R^2 \quad , \tag{2-62}$$

$$D = 2\hat{S}\,R^2 + 2T^4(T^2-1)\frac{C'}{R^2} + (3T^4 - 4T^2 + 1)D' \quad , \tag{2-63}$$

where

$$F_1 = \frac{E}{E'}[4\nu' T^6 - (1+\nu')(1+3T^4)] \quad , \tag{2-64}$$

$$F_2 = \frac{E}{E'}[-2(3+\nu')T^6 + (1+\nu')(3T^4-1)] \quad , \tag{2-65}$$

$$F_3 = \frac{E}{E'}[\nu' T^4 - (1+\nu')T^2 - 1] \quad , \tag{2-66}$$

$$F_4 = \frac{E}{E'}[-(\nu'+3)T^4 + 2(1+\nu')T^2 + (1-\nu')] \quad \text{, and} \tag{2-67}$$

$$\Delta = [(\nu + 1)(\nu - 3)]T^8 + 4[(5 - \nu)F_3 + (2 - \nu)F_4$$

$$- (\nu + 1)(\nu - 3)]T^6$$

$$+ [(\nu - 5)F_1 + 2(\nu - 2)F_2 + 6(\nu - 3)F_3 + 3(\nu - 3)F_4$$

$$+ 6(\nu + 1)(\nu - 3)]T^4$$

$$- 2[(\nu - 3)(F_1 + F_2) + 2(\nu + 1)(\nu - 3)]T^2$$

$$+ [(F_1(F_4 - 1 + \nu) - 2F_3(F_2 + 1 + \nu) + F_4(1 + \nu) - 2F_2$$

$$+ (\nu + 1)(\nu - 3)] \quad . \tag{2-68}$$

For the unbonded case

$$C' = 12\hat{S}(3T^4 - 2T^2 - 1)\frac{R^4}{\Delta^*} \quad , \tag{2-69}$$

$$D' = - 12\hat{S}(2T^6 - T^4 - 1)\frac{R^2}{\Delta^*} \quad , \tag{2-70}$$

$$C = - 3\hat{S}\, R^4 + (T^4 - 1)C' + 2(T^2 - 1)D'R^2 \quad , \tag{2-71}$$

$$D = 2\hat{S}\, R^2 - (T^4 - 1)\frac{C'}{R^2} - 2(T^2 - 1)D'R^2 \quad , \tag{2-72}$$

where

$$\Delta^* = [(\nu - 5)]T^8 + 4[(5 - \nu) + 3F_3]T^6$$

$$+ 3[2(\nu - 5) - F_1 - 2F_3]T^4$$

$$+ 2[2(5 - \nu) + F_1]T^2$$

$$+ [(\nu - 5) + F_1 - 6F_3] \quad , \tag{2-73}$$

and the parameters F_1 and F_3 are defined above.

This discussion completes the solution for a lined shaft subjected to a deviator stress in the far-field. The solution is valid for both plane stress condition and for plane strain conditions provided the appropriate values of the elastic properties are used. The effect of axial strain was considered in connection with the isotropic component and need not be considered again here.

Summary of Equations -- The complete solution of the stresses and displacements for the liner and medium for hoop deformation is provided above. This summary restates those equations needed to compute the liner stresses that are important to design.

The case considered is one of a lined shaft subjected to stresses imposed after the liner has been installed. The imposed state of stress is defined in terms of its Cartesian components designated as

$$\hat{\sigma}_x\ ,\ \hat{\sigma}_y\ ,\ \hat{\tau}_{xy}\ ,\ \hat{\tau}_{xz}\ ,\ \text{and}\ \hat{\tau}_{yz}.$$

Stresses are induced in the plane of a horizontal cross section of the shaft by $\hat{\sigma}_x$, $\hat{\sigma}_y$, and $\hat{\tau}_{xy}$, and $\hat{\tau}_{xz}$ and $\hat{\tau}_{yz}$ induce shear stresses on a horizontal plane through the shaft.

The solution for the stresses induced in the cross section of the liner is provided by Equations 2-14, 2-33, 2-47 through 2-49, 2-58, and 2-59. However, this solution is given in terms of the values of the mean and deviator stresses away from the shaft, which are defined from the applied remote principal stresses, $\hat{\sigma}_1$ and $\hat{\sigma}_3$. The necessary transformation equations needed to obtain those principal stresses from prescribed direct and shear stresses are

$$\hat{\sigma}_1 = \frac{1}{2}(\hat{\sigma}_x + \hat{\sigma}_y) + [\hat{\tau}_{xy}^2 + (\hat{\sigma}_x - \hat{\sigma}_y)^2/4]^{1/2} \quad \text{and} \tag{2-74}$$

$$\hat{\sigma}_3 = \frac{1}{2}(\hat{\sigma}_x + \hat{\sigma}_y) - [\hat{\tau}_{xy}^2 + (\hat{\sigma}_x - \hat{\sigma}_y)^2/4]^{1/2} \quad . \tag{2-75}$$

The directions of these principal stresses are orthogonal to each other, and the direction of $\hat{\sigma}_1$ is given by

$$\alpha = \frac{1}{2}\tan^{-1}\left(\frac{2\hat{\tau}_{xy}}{\hat{\sigma}_x - \hat{\sigma}_y}\right) \quad . \tag{2-76}$$

As indicated in Figure 2-7, α is measured counterclockwise to the x axis.

If the applied free-field mean and deviator stresses are defined by

$$\hat{P} = (\hat{\sigma}_1 + \hat{\sigma}_3)/2 \ \text{ and } \hat{S} = (\hat{\sigma}_1 - \hat{\sigma}_3)/2 \quad , \tag{2-77}$$

the liner stresses are

$$\sigma'_r = \frac{A'}{r^2}(1 - M^2) + \left[\frac{C'}{r^4}(M^4 - 1) + \frac{2D'}{r^2}(M^2 - 1)\right] cos2(\theta - \alpha) \quad , \tag{2-78}$$

$$\sigma'_t = -\frac{A'}{r^2}(1 + M^2) + \left[\frac{C'}{r^4}(1 - M^4 + 4M^6) + \frac{2D'}{r^2}(3M^4 - M^2)\right] cos2(\theta - \alpha) \quad , \quad \text{and} \tag{2-79}$$

$$\tau'_{rt} = \left[\frac{C'}{r^4}(2M^6 - M^4 - 1) + \frac{D'}{r^2}(3M^4 - 2M^2 - 1)\right] sin2(\theta - \alpha) \quad , \tag{2-80}$$

where θ is measured counterclockwise from the direction of the major in-plane principal stress and $(\theta - \alpha) = t$, the angle used previously. In these equations,

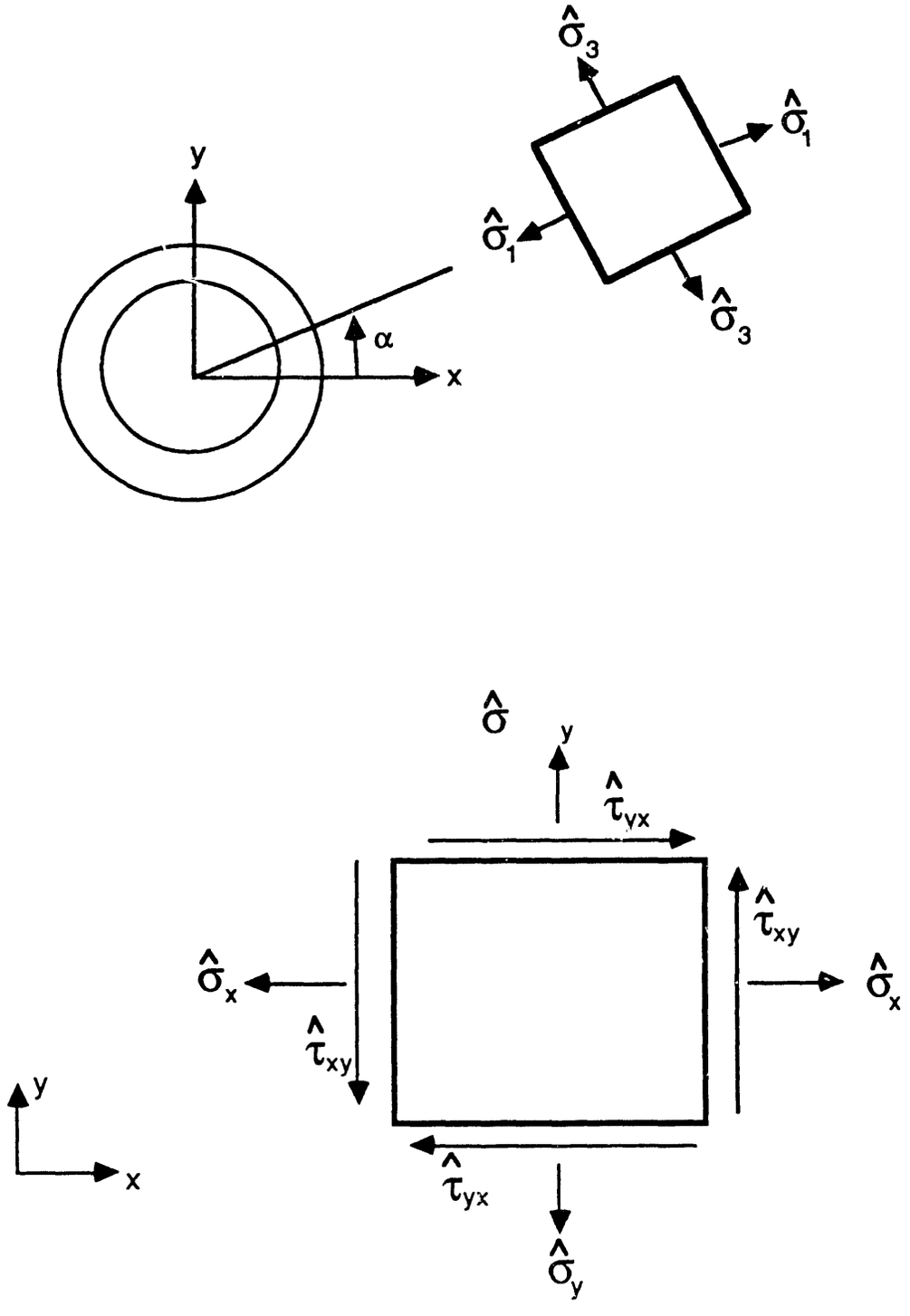

Figure 2-7. Definition of Applied Principal Stresses and their Relationship to Applied Stresses in Cartesian X-Y Framework

$$A' = \frac{-2\hat{P}R^2 - B'R^2\varepsilon_z}{\frac{\tilde{E}}{\tilde{E}'}[(1+\tilde{\nu}') + T^2(1-\tilde{\nu}')] - (1+\tilde{\nu})(1-T^2)} \quad , \tag{2-81}$$

where

$$B' = \tilde{E}(\nu' - \nu) \quad . \tag{2-82}$$

The values of C and D depend on the condition of the liner and medium interface. For the case of bonding between the liner and medium,

$$C' = \frac{12\hat{S}\cdot R^4}{\Delta}[(1+\tilde{\nu})T^4 - (2F_3 + F_4 + 1 + \tilde{\nu})] \quad \text{and} \tag{2-83}$$

$$D' = \frac{4\hat{S}\cdot R^2}{\Delta}\{-2(1+\tilde{\nu})T^6 + [F_1 + F_2 + 2(1+\tilde{\nu})]\} \quad , \tag{2-84}$$

where

$$\begin{aligned}\Delta = {} & (\tilde{\nu}+1)(\tilde{\nu}-3)T^8 + 4[(5-\tilde{\nu})F_3 + (2-\tilde{\nu})F_4 - (\tilde{\nu}+1)(\tilde{\nu}-3)]T^6 \\ & + [(\tilde{\nu}-5)F_1 + 2(\tilde{\nu}-2)F_2 + 6(\tilde{\nu}-3)F_3 + 3(\tilde{\nu}-3)F_4 + 6(\tilde{\nu}+1)(\tilde{\nu}-3)]T^4 \\ & - 2[(\tilde{\nu}-3)(F_1+F_2) + 2(\tilde{\nu}+1)(\tilde{\nu}-3)]T^2 \\ & + [F_1(F_4 - 1 + \tilde{\nu}) - 2F_3(F_2 + 1 + \tilde{\nu}) + F_4(1+\tilde{\nu}) - 2F_2 + (\tilde{\nu}+1)(\tilde{\nu}-3)] \quad ,\end{aligned} \tag{2-85}$$

and

$$F_1 = \frac{\tilde{E}}{\tilde{E}'}[4\tilde{\nu}'T^6 - (1+\tilde{\nu}')(1+3T^4)] \quad , \tag{2-86}$$

$$F_2 = \frac{\tilde{E}}{\tilde{E}'}[-2(3+\tilde{\nu}')T^6 + (1+\tilde{\nu}')(3T^4 - 1)] \quad , \tag{2-87}$$

$$F_3 = \frac{\tilde{E}}{\tilde{E}'}[\tilde{\nu}'T^4 - (1+\tilde{\nu}')T^2 - 1] \quad , \quad \text{and} \tag{2-88}$$

$$F_4 = \frac{\tilde{E}}{\tilde{E}'}[-(\tilde{\nu}'+3)T^4 + 2(1+\tilde{\nu}')T^2 + (1-\tilde{\nu}')] \quad . \tag{2-89}$$

For the case of no bonding between the liner and medium,

$$C' = \frac{12\hat{S}\cdot R^4}{\Delta^*}(3T^4 - 2T^2 - 1) \quad \text{and} \tag{2-90}$$

$$D' = -\frac{12\hat{S} \cdot R^2}{\Delta^*}(2T^6 - T^4 - 1) \quad , \tag{2-91}$$

where

$$\begin{aligned}\Delta^* = {} & [(\tilde{\nu} - 5)T^8 + 4[(5 - \tilde{\nu}) + 3F_3]T^6 \\ & + 3[2(\tilde{\nu} - 5) - F_1 - 2F_3]T^4 \\ & + 2[2(5 - \tilde{\nu}) + F_1]T^2 + [(\tilde{\nu} - 5) + F_1 - 6F_3] \quad ,\end{aligned} \tag{2-92}$$

and the parameters, F_1 and F_3, are given by Equations 2-86 and 2-88, respectively.

In all these equations, $T = R/a$, the ratio of the external and internal radii of the liner. The superscript ~ has been used to denote where effective elastic properties are used for the plane strain case, i.e.,

$$\tilde{E} = \frac{E}{1 - \nu^2} \quad \text{and} \quad \tilde{\nu} = \frac{\nu}{1 - \nu} \quad . \tag{2-93}$$

For plane stress conditions, the equations are identical except that the unmodified value of the elastic properties E and ν are used, and $B' = 0$ in Equation 2-81. For plane stress, $\sigma_z = 0$; for plane strain, Equation 2-25 applies for the axial stress.

2.4.2 Out-of-Plane Shear Submodel

This section evaluates the effect of changes in the shear stress on planes perpendicular to the axis of the shaft (Figure 2-2). These out-of-plane stresses are the τ_{xz} and the τ_{yz} stresses in the Cartesian framework or τ_{rz} and $\tau_{\theta z}$ in the cylindrical framework. Away from the shaft, these stresses have the values $\hat{\tau}_{xz}$ and $\hat{\tau}_{yz}$. Primary concern is given to the corresponding shear stresses, τ_{rz} and $\tau_{\theta z}$, that are induced on sections normal to the axis of the shaft. However, the solutions for the out-of-plane displacements are also given.

Assumptions -- Key to the derivation of the analytical solutions considered here is the assumption that the behavior of the liner and the surrounding medium is linear elastic. The in-plane strains are assumed to be independent of the axial coordinate. This assumption is consistent with the notion of a long shaft with prescribed stresses at infinity. As before, the solutions depend on the assumption that the applied loads are static or may be treated as pseudostatic. If cases involving transient loading are considered, then the assumption should be verified that pseudostatic behavior is applicable.

Analytical Solutions -- The general solution to this problem is provided by Jaeger and Cook (1979, p. 253). With the out-of-plane displacement of w, the shear stresses are

$$\tau_{rz} = G\gamma_{rz} = G\frac{\partial w}{\partial r} \quad \text{and} \quad \tau_{\theta z} = G\gamma_{\theta z} = G\frac{\partial w}{r\partial\theta} \quad , \tag{2-94}$$

where γ_{rz} and $\gamma_{\theta z}$ are shear strains.

The general solution to the problem is

$$w = (Ir + J/r)\cos\theta + (Kr + L/r)\sin\theta \quad , \tag{2-95}$$

where I, J, K, and L are unknown coefficients to be determined from boundary conditions, and terms describing a linear increase in w along the length of the shaft have been ignored.

It follows from Equations 2-94 and 2-95 that

$$\tau_{rz} = G(I - J/r^2)\cos\theta + G(K - L/r^2)\sin\theta \quad , \tag{2-96}$$

and

$$\tau_{\theta z} = -G(I + J/r^2)\sin\theta + G(K + L/r^2)\cos\theta \quad . \tag{2-97}$$

The coefficients of these general equations are obtained using the boundary conditions for the cases of unlined and lined shafts. In the latter case, the two alternatives of complete bonding and no bonding between the liner and medium are considered.

<u>An Unlined Shaft</u>

In this case, $\tau_{rz} = 0$ at the free surface, and $r = R = a$; hence, $J = Ia^2$ and $L = Ka^2$. The complete solution is

$$w = Ir(1 + m^2)\cos\theta + Kr(1 + m^2)\sin\theta \quad , \tag{2-98}$$

$$\tau_{rz} = GI(1 - m^2)\cos\theta + GK(1 - m^2)\sin\theta \quad , \tag{2-99}$$

$$\tau_{\theta z} = -GI(1 + m^2)\sin\theta + GK(1 + m^2)\cos\theta \quad , \quad \text{and} \tag{2-100}$$

$$m = a/r \quad .$$

If the x axis is taken as the reference axis for the cylindrical coordinate scheme for the shaft, then

$$\tau_{rz} \rightarrow \hat{\tau}_{xz} \quad \text{as} \quad r \rightarrow \infty \quad \text{and} \quad \theta = 0°$$

$$\tau_{rz} \rightarrow \hat{\tau}_{yz} \quad \text{as} \quad r \rightarrow \infty \quad \text{and} \quad \theta = 90° \quad .$$

Using these conditions, the solution for the unlined shaft becomes

$$w = \frac{\hat{\tau}_{xz} r}{G}(1 + m^2)\cos\theta + \frac{\hat{\tau}_{yz} r}{G}(1 + m^2)\sin\theta \quad , \tag{2-101}$$

$$\tau_{rz} = \hat{\tau}_{xz}(1 - m^2)\cos\theta + \hat{\tau}_{yz}(1 - m^2)\sin\theta \quad , \quad \text{and} \tag{2-102}$$

$$\tau_{\theta z} = -\hat{\tau}_{xz}(1+m^2)\sin\theta + \hat{\tau}_{yz}(1+m^2)\cos\theta \quad . \tag{2-103}$$

A Lined Shaft

The general solution, given by Equations 2-95 through 2-97, is applicable to both the medium and the liner. Restating these equations, for the liner and distinguishing between the medium and liner by using the superscript $'$,

$$w' = (I'r + J'/r)\cos\theta + (K'r + L'/r)\sin\theta \quad , \tag{2-104}$$

$$\tau'_{rz} = G'(I' - J'/r^2)\cos\theta + G'(K' - L'/r^2)\sin\theta \quad , \quad \text{and} \tag{2-105}$$

$$\tau'_{\theta z} = -G'(I' + J'/r^2)\sin\theta + G'(K' + L'/r^2)\cos\theta \quad . \tag{2-106}$$

The shear stresses vanish at the internal surface of the liner, which requires that $J' = I'a^2$ and $L' = K'a^2$. The solution becomes

$$w' = I'r(1+m^2)\cos\theta + K'r(1+m^2)\sin\theta \quad , \tag{2-107}$$

$$\tau'_{rz} = G'I'(1-m^2)\cos\theta + G'K'(1-m^2)\sin\theta \quad , \quad \text{and} \tag{2-108}$$

$$\tau'_{\theta z} = -G'I'(1+m^2)\sin\theta + G'K'(1+m^2)\cos\theta \quad . \tag{2-109}$$

For the region outside the shaft, the same boundary conditions apply in the free-field as for the unlined case; i.e.,

$$\tau_{rz} \rightarrow \hat{\tau}_{xz} \quad \text{as} \quad r \rightarrow \infty \quad \text{and} \quad \theta = 0°$$

$$\tau_{rz} \rightarrow \hat{\tau}_{yz} \quad \text{as} \quad r \rightarrow \infty \quad \text{and} \quad \theta = 90° \quad .$$

Hence, from the solution given earlier,

$$I = \frac{\hat{\tau}_{xz}}{G} \quad \text{and} \quad K = \frac{\hat{\tau}_{yz}}{G} \quad ,$$

and the general solution for the medium becomes

$$w = r\left(\frac{\hat{\tau}_{xz}}{G} + \frac{J}{r^2}\right)\cos\theta + r\left(\frac{\hat{\tau}_{yz}}{G} + \frac{L}{r^2}\right)\sin\theta \quad , \tag{2-110}$$

$$\tau_{rz} = G\left(\frac{\hat{\tau}_{xz}}{G} - \frac{J}{r^2}\right)\cos\theta + G\left(\frac{\hat{\tau}_{yz}}{G} - \frac{L}{r^2}\right)\sin\theta \quad , \quad \text{and} \tag{2-111}$$

$$\tau_{\theta z} = -G\left(\frac{\hat{\tau}_{xz}}{G} + \frac{J}{r^2}\right)\sin\theta + G\left(\frac{\hat{\tau}_{yz}}{G} + \frac{L}{r^2}\right)\cos\theta \quad . \tag{2-112}$$

Specifically, terms that include m represent the effect of the shaft, and the remainder represent the deformation caused by free-field stresses. Hence, the displacement induced as a result of the excavation of a circular shaft in a medium with initial stresses $\hat{P}$ and $\hat{S}$ is given by

$$u_e = \frac{r}{E}\{(1+\nu)m^2\hat{P} + [4-(1+\nu)m^2]\,m^2\hat{S}\,cos2t\} \quad , \quad \text{and} \tag{2-125}$$

$$v_e = -\frac{r}{E}\{[(3-\nu)-(1+\nu)(1-m^2)]\,m^2\}\,\hat{S}\,sin2t \quad , \tag{2-126}$$

where the subscript e denotes that these stresses are induced by excavation of the shaft. As before, the appropriate substitution for material properties is made for the case of plane strain.

The case of an initially stressed material that relaxes into an unstressed liner is described below. Following the development for the external loading case, the initial stress field is decomposed into the isotropic part ($\hat{P}$) and the deviator part ($\hat{S}$). The displacement caused by the isotropic part is defined as

$$u_e = -\frac{r}{E}\frac{A}{r^2}(1+\nu) \quad , \tag{2-127}$$

where A is an unknown coefficient that is derived for the conditions for continuity of radial stress, σ_r, and radial displacements, u_e, at the interface between the medium and the liner. This equation differs from Equation 2-19 for the external loading case by the absence of the contribution of the term $\hat{P}$. The other equations (Equations 2-13, 2-14, and 2-20) remain unchanged. The unknown coefficient A is

$$A_e = \frac{-\hat{P}R^2\frac{E}{E'}[(1+\nu')+T^2(1-\nu')]}{\frac{E}{E'}[(1+\nu')+T^2(1-\nu')]-(1+\nu)(1-T^2)} \quad , \tag{2-128}$$

and the corresponding coefficient for the liner is

$$A'_e = \frac{-R^2(1+\nu)\hat{P}}{\frac{E}{E'}[(1+\nu')+T^2(1-\nu')]-(1+\nu)(1-T^2)} \quad . \tag{2-129}$$

The displacements of the medium for the relaxation of the deviator stress are given by

$$u_e = \frac{r}{E}\left[\frac{C_e}{3r^4}(1+\nu)+\frac{2D_e}{r^2}\right]cos2t \quad , \quad \text{and} \tag{2-130}$$

$$v_e = \frac{r}{E}\left[\frac{C_e}{3r^4}(1+\nu)-\frac{D_e}{r^2}(1-\nu)\right]sin2t \quad . \tag{2-131}$$

These equations replace Equations 2-43 and 2-44. The other equations for the medium and liner remain unaltered (Equations 2-40 through 2-42 and 2-47 through 2-51).

Substitution of these equations in the condition for a bonded liner yields the following set of simultaneous equations.

$$\begin{vmatrix} 1 & 2 & (T^4-1) & 2(T^2-1) \\ 1 & 1 & (2T^6-T^4-1) & (3T^4-2T^2-1) \\ 1 & \frac{6}{(1+\nu)} & \frac{E}{E'(1+\nu)}[4\nu' T^6-(3T^4+1)(1+\nu')] & \frac{6E}{E'(1+\nu)}[\nu' T^4-(1+\nu')T^2-1] \\ 1 & -\frac{3(1-\nu)}{(1+\nu)} & \frac{E}{E'(1+\nu)}[(3T^4-1)(1+\nu')-(6+2\nu')T^6] & \frac{3E}{E'(1+\nu)}[2T^2(1+\nu')+(1-\nu')-(3+\nu')T^4] \end{vmatrix} \begin{vmatrix} \frac{C_e}{R^4} \\ \frac{D_e}{R^2} \\ \frac{C'_e}{R^4} \\ \frac{D'_e}{R^2} \end{vmatrix} = \begin{vmatrix} S \\ -S \\ 0 \\ 0 \end{vmatrix} \tag{2-132}$$

For the case of an unbonded liner, the boundary conditions at the interface yield the following.

$$\begin{vmatrix} 1 & 2 & (T^4-1) & 2(T^2-1) \\ 1 & 1 & 0 & 0 \\ 0 & 0 & (2T^6-T^4-1) & (3T^4-2T^2-1) \\ 1 & \frac{6}{(1+\nu)} & \frac{E}{E'(1+\nu)}[4\nu' T^6-(3T^4+1)(1+\nu')] & \frac{6E}{E'(1+\nu)}[\nu' T^4-(1+\nu')T^2-1] \end{vmatrix} \begin{vmatrix} \frac{C_e}{R^4} \\ \frac{D_e}{R^2} \\ \frac{C'_e}{R^4} \\ \frac{D'_e}{R^2} \end{vmatrix} = \begin{vmatrix} S \\ -S \\ 0 \\ 0 \end{vmatrix} \tag{2-133}$$

With the exception of the right-hand sides, these equations are identical to the equations for the external loading case (Equations 2-58 and 2-59). Solution of these equations yields the unknown coefficients C_e, D_e, C'_e, and D'_e.

Implementation in the SHAFT code of the equations described above necessitates very few changes. Specifically, revisions must be used for the equations for the displacements in the medium (Equations 2-127, 2-130, and 2-131), the expressions for the coefficients A_e and A'_e (Equations 2-4 and 2-5), and the right-hand sides of the simultaneous equations for coefficients C_e, D_e, C'_e, and D'_e (Equations 2-132 and 2-133).

The equations derived above are based on the assumption that the lining can be installed before any elastic recovery of the surrounding medium has occurred; i.e., the processes of excavation and liner installation are simultaneous. This situation is unrealistic, and analysis based on this premise results in an overestimation of liner deformation and stresses. In practice, the extent of deformation of the medium that occurs before liner installation must be estimated, measured in the field, or computed using a three-dimensional stress analysis model. Hence, calculations using the equations given in this section are of limited practical value and are not included as an option in the version of the code documented by this report.

2.5 Performance

The limitations of the performance of the SHAFT code derive directly from the assumption inherent in the model. Specifically, both medium and liner are treated as linearly elastic materials and simple bonded or unbonded conditions are assumed at the interface between the two. Moreover, only the case of statically applied external loads, expressed as either stresses or strains, can be considered. It may be necessary to validate the use of static analysis when considering transient loads that arise from seismic loading.

The code is currently configured to automatically generate stresses and displacements at 10 data points along 2 radial lines in the liner. In addition, the user may specify sample points defined on a cylindrical grid with as many as 100 radial distances and 100 angular locations relative to the orientation of the reference (xx) horizontal stress, thus generating as many as 10,000 sample points. The manually defined sample points may be either in the liner or in the medium.

Because the code is based on an exact analytical solution to the problem, no numerical approximations are involved. However, coefficients are calculated using a Gaussian elimination routine. No significant errors result from the use of the solution method, and no special conditions exist which might cause poor performance.

3.0 USER'S MANUAL

The SHAFT code is intended to be run interactively on an IBM PC or compatible microcomputer. Because the code prompts the user for all information, formal data preparation is not necessary and no training in the use of the code is required. The primary function of this section is, therefore, to describe aspects of the use of the code that may not be completely self-evident to a first-time user who lacks background knowledge of the computer coding or the theoretical basis of the code.

3.1 Function and Invocation of Options

The code offers the user several options in both the method of data entry and the analyses performed. These options are listed below.

3.1.1 Selection of Hoop Deformation or Pure Shear Analysis

The user is asked whether he desires to perform hoop deformation calculations, shear analysis, or to terminate. The response is H for the hoop deformation, S for shear analysis, and T to terminate. The hoop and out-of-plane shear calculations are entirely independent of each other; only the geometry and material properties are the same in the two cases.

3.1.2 Selection of Input for Stresses or Strains

The user is asked whether he desires to enter the applied loads as strains. If the response is no (N), then stresses are requested.

3.1.3 Selection of Plane Stress or Plane Strain

The user is asked whether a plane stress analysis is to be performed. If the response is no (N), then a plane strain analysis is performed and the user is prompted for values of the axial strain. Entry of a value of zero for the axial strain corresponds to conventional plane strain conditions.

3.1.4 Selection of Bonded or Unbonded Conditions at the Interface of the Liner and Medium

The user is asked whether the liner is bonded to the medium. If the response is yes (Y), then no relative shear displacement is allowed between the liner and the medium (i.e., the liner is bonded to the surrounding material). If the response is no (N), then the liner is allowed to slide freely against the medium and no shear stress develops at the interface. The liner and medium are not allowed to separate in tension even if slip is permitted.

3.1.5 Selection of Automatic or Manual Sampling

The user is asked whether he wishes to enter the sample points manually. If the response is yes (Y), then the user is prompted for the coordinates of sample points. Coordinates are generated on a cylindrical grid system defined by radial distances from the center of the shaft and circumferential angles measured relative to the x axis. Sample points may be in the medium or the liner. To examine conditions in the medium, the user selects a radial distance greater than the outer radius of the liner. Regardless of the response to the above question, samples are generated automatically along two radial lines in the liner. For hoop calculations, those radial lines are in the direction of the principal stresses. For the shear calculations, those lines are in the direction of the x and y axes.

3.2 Input and Output

All input to the SHAFT code in response to clearly stated questions. The user need only respond either with yes (Y/y) or no (N/n) (both upper and lower cases are recognized) if the question requires a decision or with a number if numerical input is required. In all cases, a single character or a number is entered, followed by the enter or return command.

Additional information regarding input is given below.

The user is prompted for a name or identification, which can be any string of up to 40 characters.

The user is prompted for a filename for saving output. That name must comprise a string of up to 10 legal characters. An output file of that name is automatically created and can be printed after completion of the analysis by entering, for example, the instruction PRINT LAYER3.OUT, where LAYER3.OUT is a legal filename.

If the user elects to generate samples manually, then he is prompted first for radial distances and subsequently for circumferential angles. In both cases, the list of values is terminated by entering any negative number. In the interest of clarity, it is recommended that values for the radial distances be input in ascending order. (Any sample points with radial distances less than or equal to the radius of the unlined hole are assumed automatically to be in the liner.) Circumferential angles should be input sequentially from the x axis (parallel to the xx stress), moving counterclockwise.

No assumptions regarding the units in which information is input are implicit in the SHAFT code. The user is responsible for ensuring that the units for dimensions, stresses, and strains are consistent. For the purposes of this document, the sign convention adopted is that compressive stresses are positive and displacements are positive in the negative coordinate direction. However, no sign convention is implicit within the code.

Output is provided both on the screen and in the data file described above. A complete record of analysis is maintained in the output data file. The output file also contains the name of the user, information on the code, and the time and date of the analysis. This last item of information is needed to provide an adequate record for quality assurance purposes. The screen output is abbreviated and includes a simple graphical display of the distribution of stress and displacements through the liner. For each variable analyzed, whether out-of-plane shear stresses or direct stresses resulting from hoop deformation, the distribution of the variable is displayed for two radial lines extending from the interior to the exterior of the liner. The two radial lines, designated 1 and 2, are oriented to correspond to the principal directions for the applied stress field, in the case of hoop deformation analysis, and in the x and y coordinate directions, in the case of out-of-plane shear analysis. The locations of the sample points and numerical values are tabulated next to the graphs; the purpose of the graphic display is merely to aid in identifying the location of maximum and minimum values.

3.3 Sample Analyses

Three sample problems taken from "Preliminary Shaft Liner Design Criteria and Methodology Guide," (Richardson, 1990) are described below: (1) the case of static loads causing hoop deformation and axial stress, (2) the case of seismic loading for vertically propagating compressional and horizontally propagating shear waves, and (3) a more general seismic load combination. Details of how the three various loads are combined are discussed by Richardson (1990).

3.3.1 Example 1—Static Loads

Static loads in the repository shaft design can be given as a combination of the ground load and the thermal load. For example use:

$$\sigma_{\hat{x}} = 1.08 \text{ MPa},$$
$$\sigma_{\hat{y}} = 2.02 \text{ MPa},$$
$$\tau_{\hat{x}\hat{y}} = 0.5 \text{ MPa, and}$$
$$\varepsilon_{\hat{x}} = -150 \times 10^{-6}.$$

The parameters representing the medium are assumed to be

$$E = 15{,}200 \text{ MPa and}$$
$$\nu = 0.22.$$

The parameters used to represent the concrete shaft liner, which is assumed to be bonded to the medium, are

$$E' = 28{,}000 \text{ MPa},$$
$$\nu' = 0.15,$$
$$\text{inner radius} = 1.83 \text{ m, and}$$
$$\text{out radius} = 2.13 \text{ m}.$$

Output for the analysis is provided in Figure 3-1. Because the program prompts the user for input data, no input file is created. All input parameters are contained in the output files. The output is illustrated systematically in the upper part of Figure 3-2, which is a polar plot of hoop stresses. The maximum value of the hoop stress is 9.2 MPa. This value is compressive and occurs at the inner face of the liner.

3.3.2 Example 2—Seismic Load Combination

This seismic load combination comprises a vertically propagating compressional wave (P) and a horizontally propagating shear wave with particle motion parallel to the ground surface (SH) (refer to Figure 3-2). For shaft lining design, these loads are treated as static loads and, hence, the SHAFT code can be used to evaluate the stresses in the liner. As an example, assume that the nonzero strains associated with those waves are

$$\varepsilon_z = 44.0 \times 10^{-6} \text{ and}$$
$$\gamma_{xy} = 109.0 \times 10^{-6}.$$

The shaft liner and medium parameters are the same as the first example except for the use of a dynamic modulus in the TS unit (23,500 MPa).

Output for the analysis is provided in Figure 3-3 and is illustrated schematically in the lower portion of Figure 3-2. The maximum magnitude of the hoop stress is approximately 5.3 MPa and occurs at the interior face.

```
*****************************************************************************
*                                                                           *
*      SSSSSSSS        HH       HH          AA          FFFFFFFFFFF   TTTTTTTTTTTTTT  *
*     SS     SSS      HH       HH         AAAA         FFFFFFFFFFF   TTTTTTTTTTTTTT  *
*    SS               HH       HH        AA  AA        FF                  TT        *
*     SSS             HHHHHHHHHHH       AA    AA       FF                  TT        *
*        SSS          HHHHHHHHHHH      AAAAAAAAAA      FFFFFF              TT        *
*           SSS       HH       HH     AAAAAAAAAAAA     FFFFFF              TT        *
*             SS      HH       HH    AA          AA    FF                  TT        *
*    SSS     SS       HH       HH   AA            AA   FF                  TT        *
*     SSSSSSSS        HH       HH   AA            AA   FF                  TT        *
*                                                                           *
*****************************************************************************

 Analytical solutions for a lined circular hole

 Code: SHAFT.  Version 3.02, upgraded for SANDIA/NNWSI Jan 20, 1989
               J.F.T. Agapito and Associates
               Grand Junction (303) 242 4220

Example 1, Static load case 4

 Analysis completed by :jra
 The QA version of this code is : SHAFT 3.02
 Plane strain analysis

 Bonding between shaft wall and liner is assumed

 Geometry and Properties of Shaft and Liner

 Radius of unlined hole....... =      2.1300
 Lining thickness............. =       .3000
 Elastic modulus of medium.... =   .1520E+05
 Poissons ratio of medium..... =   .2200E+00
 Elastic modulus of liner..... =   .2800E+05
 Poissons ratio of liner...... =   .1500E+00


 HOOP AND AXIAL DEFORMATION CALCULATION
 ______________________________________

 The input in-plane stresses are :
    SX =     .1080E+01
    SY =     .2020E+01
    SXY =     .5000E+00
 The axial strain (ESZ) is :     -.1500E-03

 The principal stresses are :
    SIG1 =     .2236E+01
    SIG3 =     .8638E+00
 The major stress is inclined at  66.6 degrees relative to the X axis

 The Interaction Calculation for the liner
 predicts the stresses listed below.
 Note that the reference angle is the
 first principal stress direction


 Hoop Stresses in the Liner
  Radius     At 0.(Pt 1)    At 90.(Pt 2)     Minimum                 Maximum
                                               .1016E+01             .9202E+01
   1.83       .1016E+01      .9202E+01      !1                            2   !
   1.86       .1173E+01      .8864E+01      !1                          2     !
   1.90       .1315E+01      .8550E+01      ! 1                       2       !
   1.93       .1445E+01      .8258E+01      ! 1                      2        !
   1.96       .1562E+01      .7985E+01      ! 1                     2         !
   2.00       .1670E+01      .7731E+01      !  1                   2          !
   2.03       .1768E+01      .7493E+01      !  1                  2           !
   2.06       .1858E+01      .7270E+01      !  1                  2           !
   2.10       .1941E+01      .7060E+01      !   1                2            !
   2.13       .2018E+01      .6862E+01      !   1               2             !

 Radial Stresses in the Liner
  Radius     At 0.(Pt 1)    At 90.(Pt 2)     Minimum                 Maximum
                                               .0000E+00             .9782E+00
   1.83       .0000E+00      .0000E+00      !+                                !
   1.86       .2218E-01      .1590E+00      !1   2                            !
   1.90       .5086E-01      .3020E+00      ! 1      2                        !
   1.93       .8497E-01      .4308E+00      !  1         2                    !
   1.96       .1236E+00      .5468E+00      !   1            2               !
   2.00       .1659E+00      .6515E+00      !    1               2           !
   2.03       .2112E+00      .7459E+00      !      1               2         !
   2.06       .2589E+00      .8313E+00      !       1               2        !
   2.10       .3085E+00      .9084E+00      !         1                 2    !
   2.13       .3596E+00      .9782E+00      !          1                   2 !
```

Figure 3-1. SHAFT Code Output: Example 1—Static Loads

```
Axial Stresses in the Liner
 Radius     At 0.(Pt 1)    At 90.(Pt 2)     Minimum                 Maximum
                                            -.4048E+01            -.2820E+01
  1.83      -.4048E+01     -.2820E+01      !1                              2 !
  1.86      -.4021E+01     -.2847E+01      !1                             2  !
  1.90      -.3995E+01     -.2872E+01      ! 1                           2   !
  1.93      -.3971E+01     -.2897E+01      ! 1                           2   !
  1.96      -.3947E+01     -.2920E+01      !  1                         2    !
  2.00      -.3925E+01     -.2943E+01      !  1                         2    !
  2.03      -.3903E+01     -.2964E+01      !   1                        2    !
  2.06      -.3882E+01     -.2985E+01      !   1                        2    !
  2.10      -.3863E+01     -.3005E+01      !    1                      2     !
  2.13      -.3843E+01     -.3024E+01      !    1                      2     !
Radial Displacements in the Liner
 Radius     At 0.(Pt 1)    At 90.(Pt 2)     Minimum                 Maximum
                                             .6330E-04            .6745E-03
  1.83       .6690E-03      .6614E-04      !2                              1  !
  1.86       .6695E-03      .6513E-04      !2                              1  !
  1.90       .6701E-03      .6436E-04      !2                              1  !
  1.93       .6706E-03      .6382E-04      !2                              1  !
  1.96       .6712E-03      .6347E-04      !2                              1  !
  2.00       .6718E-03      .6330E-04      !2                              1  !
  2.03       .6724E-03      .6330E-04      !2                              1  !
  2.06       .6730E-03      .6346E-04      !2                              1  !
  2.10       .6737E-03      .6375E-04      !2                              1  !
  2.13       .6745E-03      .6417E-04      !2                              1  !

Hoop Displacements in the Liner
 Radius     At 0.(Pt 1)    At 90.(Pt 2)     Minimum                 Maximum
                                            -.4740E-08            .0000E+00
  1.83       .0000E+00     -.4740E-08      !2                              1  !
  1.86       .0000E+00     -.4644E-08      !2                              1  !
  1.90       .0000E+00     -.4554E-08      ! 2                             1  !
  1.93       .0000E+00     -.4470E-08      ! 2                             1  !
  1.96       .0000E+00     -.4390E-08      !  2                            1  !
  2.00       .0000E+00     -.4315E-08      !  2                            1  !
  2.03       .0000E+00     -.4244E-08      !   2                           1  !
  2.06       .0000E+00     -.4177E-08      !   2                           1  !
  2.10       .0000E+00     -.4113E-08      !   2                           1  !
  2.13       .0000E+00     -.4052E-08      !    2                          1  !
Time:  15:48:20
Date:   1/26/89
```

Figure 3-1. SHAFT Code Output: Example 1—Static Loads (Concluded)

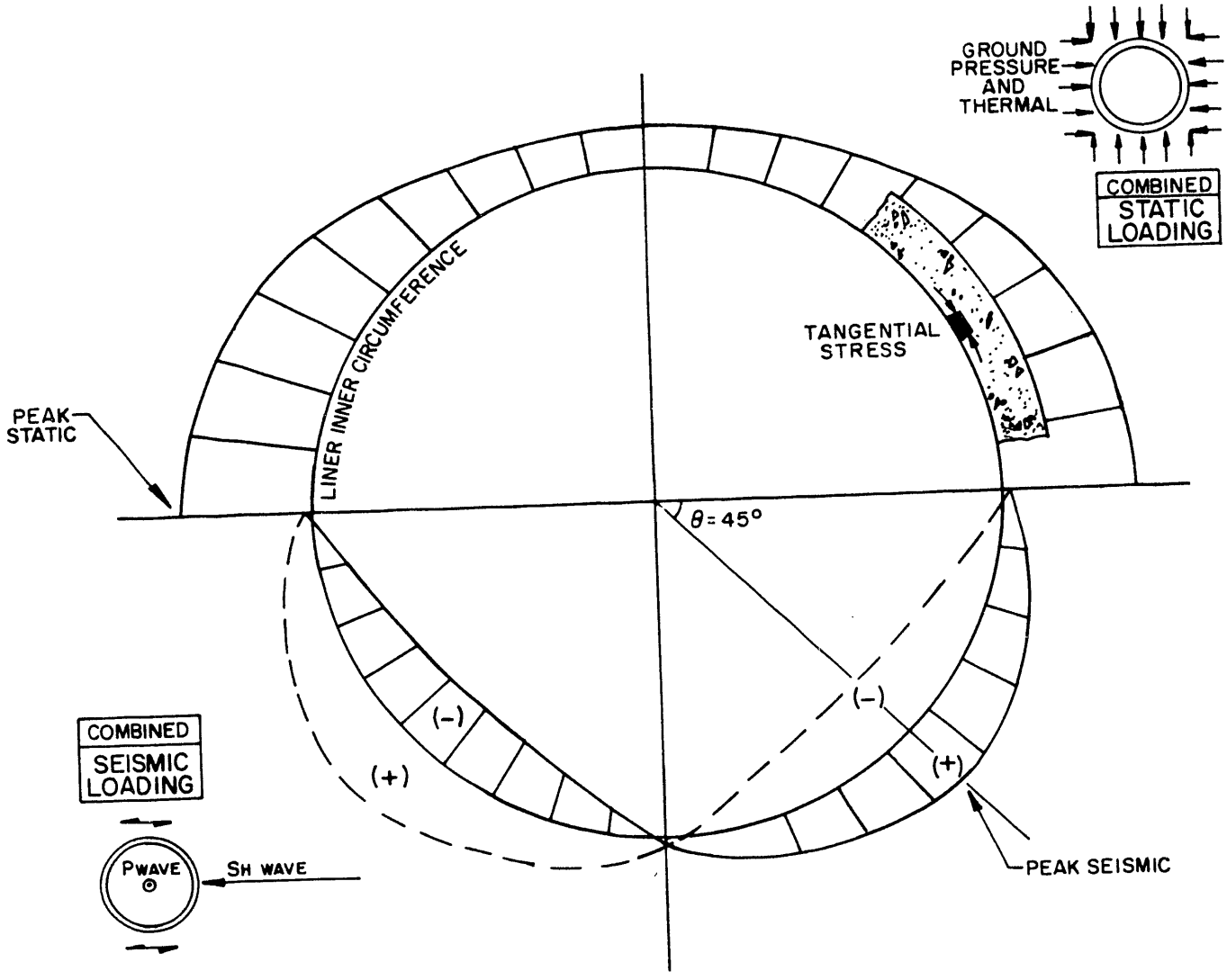

Note: Upper Portion shows Stresses from Example 1; Lower Portion shows Stresses from Example 2.

Figure 3-2. Tangential Stresses on the Interior Face of the Shaft Liner in the Example Problem

```
*****************************************************************************
*                                                                           *
*      SSSSSSSS        HH        HH          AA          FFFFFFFFFFF   TTTTTTTTTTTTTT  *
*     SS      SSS      HH        HH         AAAA         FFFFFFFFFFF   TTTTTTTTTTTTTT  *
*    SS                HH        HH        AA  AA        FF                  TT        *
*     SSS              HHHHHHHHHHH        AA    AA       FF                  TT        *
*        SSS           HHHHHHHHHHH       AAAAAAAAAA       FFFFFF              TT        *
*           SSS        HH        HH      AAAAAAAAAAAA     FFFFFF              TT        *
*             SS       HH        HH     AA          AA    FF                  TT        *
*    SSS      SS       HH        HH    AA            AA   FF                  TT        *
*     SSSSSSSS         HH        HH    AA            AA   FF                  TT        *
*                                                                           *
*****************************************************************************

Analytical solutions for a lined circular hole

Code: SHAFT,  Version 3.02, upgraded for SANDIA/NNWSI Jan 20, 1989
              J.F.T. Agapito and Associates
              Grand Junction (303) 242 4220

Example 2, Seismic load case 1

Analysis completed by :jra
The QA version of this code is : SHAFT 3.02
Plane strain analysis

Bonding between shaft wall and liner is assumed

Geometry and Properties of Shaft and Liner

Radius of unlined hole....... =      2.1300
Lining thickness............. =       .3000
Elastic modulus of medium.... =    .2350E+05
Poissons ratio of medium..... =    .2200E+00
Elastic modulus of liner..... =    .2800E+05
Poissons ratio of liner...... =    .1500E+00


HOOP AND AXIAL DEFORMATION CALCULATION
--------------------------------------

The input in-plane strains are :
   esx =     .0000E+00
   esy =     .0000E+00
   esxy =     .1090E-03
The calculated in-plane stresses are :
   SX =     .3330E+00
   SY =     .3330E+00
   SXY =     .1050E+01
The axial strain (ESZ) is :      .4400E-04

The principal stresses are :
   SIG1 =     .1383E+01
   SIG3 =    -.7168E+00
The major stress is inclined at  45.0 degrees relative to the X axis

The Interaction Calculation for the liner
predicts the stresses listed below.
Note that the reference angle is the
first principal stress direction


Hoop Stresses in the Liner
 Radius    At 0.(Pt 1)   At 90.(Pt 2)    Minimum                 Maximum
                                         -.4015E+01             .5330E+01
  1.83     -.4015E+01     .5330E+01     !1                            2  !
  1.86     -.3771E+01     .5063E+01     !1                           2   !
  1.90     -.3549E+01     .4818E+01     ! 1                         2    !
  1.93     -.3344E+01     .4593E+01     !  1                       2     !
  1.96     -.3157E+01     .4385E+01     !  1                       2     !
  2.00     -.2984E+01     .4194E+01     !   1                     2      !
  2.03     -.2825E+01     .4017E+01     !   1                    2       !
  2.06     -.2678E+01     .3853E+01     !    1                   2       !
  2.10     -.2543E+01     .3701E+01     !    1                  2        !
  2.13     -.2417E+01     .3560E+01     !    1                  2        !

Radial Stresses in the Liner
 Radius    At 0.(Pt 1)   At 90.(Pt 2)    Minimum                 Maximum
                                         -.2801E+00             .4523E+00
  1.83      .0000E+00     .0000E+00     !            +                  !
  1.86     -.6668E-01     .8999E-01     !         1     2               !
  1.90     -.1216E+00     .1670E+00     !       1           2            !
  1.93     -.1661E+00     .2325E+00     !     1                2         !
  1.96     -.2017E+00     .2880E+00     !    1                   2      !
  2.00     -.2295E+00     .3347E+00     !  1                       2    !
  2.03     -.2504E+00     .3736E+00     ! 1                         2   !
  2.06     -.2653E+00     .4056E+00     !1                           2  !
  2.10     -.2750E+00     .4316E+00     !1                            2 !
  2.13     -.2801E+00     .4523E+00     !1                            2 !
```

Figure 3-3. SHAFT Code Output: Example 2—Seismic Load Combination

```
Axial Stresses in the Liner
 Radius     At 0.(Pt 1)    At 90.(Pt 2)     Minimum                 Maximum
                                              .6298E+00             .2031E+01
  1.83       .6298E+00      .2031E+01      !1                            2  !
  1.86       .6563E+00      .2005E+01      !1                            2  !
  1.90       .6815E+00      .1980E+01      ! 1                         2   !
  1.93       .7054E+00      .1956E+01      ! 1                         2   !
  1.96       .7282E+00      .1933E+01      !  1                       2    !
  2.00       .7499E+00      .1911E+01      !  1                       2    !
  2.03       .7707E+00      .1891E+01      !  1                       2    !
  2.06       .7905E+00      .1871E+01      !   1                     2     !
  2.10       .8094E+00      .1852E+01      !   1                     2     !
  2.13       .8275E+00      .1834E+01      !    1                   2      !

Radial Displacements in the Liner
 Radius     At 0.(Pt 1)    At 90.(Pt 2)     Minimum                 Maximum
                                             -.2887E-03            .3433E-03
  1.83       .3415E-03     -.2816E-03      !2                            1  !
  1.86       .3420E-03     -.2829E-03      !2                            1  !
  1.90       .3424E-03     -.2839E-03      !2                            1  !
  1.93       .3428E-03     -.2849E-03      !2                            1  !
  1.96       .3430E-03     -.2857E-03      !2                            1  !
  2.00       .3432E-03     -.2865E-03      !2                            1  !
  2.03       .3432E-03     -.2871E-03      !2                            1  !
  2.06       .3433E-03     -.2877E-03      !2                            1  !
  2.10       .3433E-03     -.2882E-03      !2                            1  !
  2.13       .3433E-03     -.2887E-03      !2                            1  !

Hoop Displacements in the Liner
 Radius     At 0.(Pt 1)    At 90.(Pt 2)     Minimum                 Maximum
                                             -.5137E-08            .0000E+00
  1.83       .0000E+00     -.5137E-08      !2                            1 !
  1.86       .0000E+00     -.5043E-08      !2                            1 !
  1.90       .0000E+00     -.4955E-08      ! 2                           1 !
  1.93       .0000E+00     -.4874E-08      ! 2                           1 !
  1.96       .0000E+00     -.4798E-08      ! 2                           1 !
  2.00       .0000E+00     -.4728E-08      !  2                          1 !
  2.03       .0000E+00     -.4662E-08      !  2                          1 !
  2.06       .0000E+00     -.4601E-08      !   2                         1 !
  2.10       .0000E+00     -.4544E-08      !   2                         1 !
  2.13       .0000E+00     -.4491E-08      !   2                         1 !
Time:  15:54:30
Date:   1/26/89
```

Figure 3-3. SHAFT Code Output: Example 2—Seismic Load Combination (Concluded)

3.3.3 Example 3—General Seismic Load Combination

This seismic load combination is composed of compressional waves (P), shear waves with horizontal particle motion (SH), and shear waves (SV) with orthogonal particle motion at a 30° angle of incidence to the shaft axis. As an example, the complete free-field equivalent static-strain tensor might be

$$\varepsilon_x = 80 \times 10^{-6},$$
$$\varepsilon_y = 0,$$
$$\varepsilon_z = 94 \times 10^{-6},$$
$$\gamma_{xy} = 29 \times 10^{-6},$$
$$\gamma_{yz} = 20 \times 10^{-6}, \text{ and}$$
$$\gamma_{zx} = 108 \times 10^{-6}.$$

The shaft liner and medium parameters are the same as for Example 2.

In this case, both the hoop and out-of-plane shear submodels in SHAFT are used. Output from the analyses for these two submodels is provided in Figure 3-4.

3.4 Software and Computer System Requirements

The SHAFT code is intended to run interactively on an IBM PC or compatible microcomputer. The code is implemented in Version 4.1 of Microsoft FORTRAN, which conforms to American National Standard programming language FORTRAN 77 as described in the American National Standards Institute (ANSI) X3.9—1978. The recommended system configuration for use of this code is 512K Random Access Memory (RAM), 1 disk drive, 8087/80287 math coprocessor (optional), printer, and DOS 3.0 (or more recent) Operating System.

```
*****************************************************************************
*                                                                           *
*      SSSSSSSS        HH       HH          AA          FFFFFFFFFFF   TTTTTTTTTTTTTT  *
*     SS     SSS      HH       HH         AAAA         FFFFFFFFFFF   TTTTTTTTTTTTTT  *
*    SS               HH       HH        AA  AA        FF                  TT        *
*     SSS             HHHHHHHHHHH       AA    AA       FF                  TT        *
*        SSS          HHHHHHHHHHH      AAAAAAAAAA      FFFFFF              TT        *
*           SSS       HH       HH     AAAAAAAAAAAA     FFFFFF              TT        *
*             SS      HH       HH    AA          AA    FF                  TT        *
*    SSS      SS      HH       HH   AA            AA   FF                  TT        *
*     SSSSSSSS        HH       HH   AA            AA   FF                  TT        *
*                                                                           *
*****************************************************************************

Analytical solutions for a lined circular hole

Code: SHAFT.  Version 3.02, upgraded for SANDIA/NNWSI Jan 20, 1989
              J.F.T. Agapito and Associates
              Grand Junction (303) 242 4220

Example 3, Combined seismic load case 2

Analysis completed by :jra
The QA version of this code is : SHAFT 3.02
Plane strain analysis

Bonding between shaft wall and liner is assumed

Geometry and Properties of Shaft and Liner

Radius of unlined hole....... =      2.1300
Lining thickness............. =       .3000
Elastic modulus of medium.... =    .2350E+05
Poissons ratio of medium..... =    .2200E+00
Elastic modulus of liner..... =    .2800E+05
Poissons ratio of liner...... =    .1500E+00


HOOP AND AXIAL DEFORMATION CALCULATION
--------------------------------------

The input in-plane strains are :
   esx =     .8000E-04
   esy =     .0000E+00
   esxy =     .2900E-04
The calculated in-plane stresses are :
   SX =     .2858E+01
   SY =     .1317E+01
   SXY =     .2793E+00
The axial strain (ESZ) is :      .9400E-04

The principal stresses are :
   SIG1 =     .2907E+01
   SIG3 =     .1268E+01
The major stress is inclined at  10.0 degrees relative to the X axis

The Interaction Calculation for the liner
predicts the stresses listed below.
Note that the reference angle is the
first principal stress direction


Hoop Stresses in the Liner
 Radius    At 0.(Pt 1)   At 90.(Pt 2)    Minimum                 Maximum
                                          .8241E+00             .8119E+01
  1.83      .8241E+00     .8119E+01     !1                                2 !
  1.86      .9439E+00     .7841E+01     !1                            2     !
  1.90      .1051E+01     .7583E+01     !1                           2      !
  1.93      .1148E+01     .7344E+01     ! 1                         2       !
  1.96      .1234E+01     .7122E+01     ! 1                         2       !
  2.00      .1312E+01     .6916E+01     ! 1                        2        !
  2.03      .1382E+01     .6724E+01     !  1                      2         !
  2.06      .1445E+01     .6544E+01     !  1                     2          !
  2.10      .1502E+01     .6376E+01     !  1                     2          !
  2.13      .1553E+01     .6219E+01     !  1                    2           !

Radial Stresses in the Liner
 Radius    At 0.(Pt 1)   At 90.(Pt 2)    Minimum                 Maximum
                                          .0000E+00             .8713E+00
  1.83      .0000E+00     .0000E+00     !+                                  !
  1.86      .1812E-01     .1404E+00     !1   2                              !
  1.90      .4179E-01     .2670E+00     ! 1      2                          !
  1.93      .7008E-01     .3813E+00     !  1         2                      !
  1.96      .1022E+00     .4845E+00     !   1            2                 !
  2.00      .1375E+00     .5779E+00     !    1              2              !
  2.03      .1753E+00     .6624E+00     !     1                 2          !
  2.06      .2152E+00     .7390E+00     !       1                2         !
  2.10      .2568E+00     .8084E+00     !        1                  2      !
  2.13      .2996E+00     .8713E+00     !         1                     2 !
```

Figure 3-4. SHAFT Code Output: Example 3—Seismic Load Combination

```
Axial Stresses in the Liner
 Radius     At 0.(Pt 1)    At 90.(Pt 2)     Minimum                  Maximum
                                              .2756E+01              .3850E+01
  1.83       .2756E+01      .3850E+01      !1                                2 !
  1.86       .2776E+01      .3829E+01      !1                              2   !
  1.90       .2796E+01      .3810E+01      ! 1                           2     !
  1.93       .2815E+01      .3791E+01      ! 1                           2     !
  1.96       .2832E+01      .3773E+01      !  1                        2       !
  2.00       .2849E+01      .3756E+01      !  1                        2       !
  2.03       .2866E+01      .3740E+01      !  1                        2       !
  2.06       .2881E+01      .3724E+01      !   1                      2        !
  2.10       .2896E+01      .3710E+01      !   1                      2        !
  2.13       .2910E+01      .3696E+01      !    1                    2         !

Radial Displacements in the Liner
 Radius     At 0.(Pt 1)    At 90.(Pt 2)     Minimum                  Maximum
                                              .4600E-05              .5031E-03
  1.83       .5031E-03      .1665E-04      !2                                1 !
  1.86       .5025E-03      .1463E-04      !2                              1   !
  1.90       .5018E-03      .1281E-04      !2                              1   !
  1.93       .5012E-03      .1119E-04      !2                              1   !
  1.96       .5006E-03      .9737E-05      !2                              1   !
  2.00       .5000E-03      .8444E-05      !2                              1   !
  2.03       .4994E-03      .7297E-05      !2                              1   !
  2.06       .4989E-03      .6281E-05      !2                              1   !
  2.10       .4984E-03      .5385E-05      !2                              1   !
  2.13       .4979E-03      .4600E-05      !2                              1   !

Hoop Displacements in the Liner
 Radius     At 0.(Pt 1)    At 90.(Pt 2)     Minimum                  Maximum
                                             -.4010E-08              .0000E+00
  1.83       .0000E+00     -.4010E-08      !2                                1 !
  1.86       .0000E+00     -.3937E-08      !2                                1 !
  1.90       .0000E+00     -.3869E-08      ! 2                               1 !
  1.93       .0000E+00     -.3805E-08      ! 2                               1 !
  1.96       .0000E+00     -.3746E-08      ! 2                               1 !
  2.00       .0000E+00     -.3691E-08      !  2                              1 !
  2.03       .0000E+00     -.3640E-08      !  2                              1 !
  2.06       .0000E+00     -.3592E-08      !   2                             1 !
  2.10       .0000E+00     -.3548E-08      !   2                             1 !
  2.13       .0000E+00     -.3506E-08      !   2                             1 !


OUT-OF-PLANE SHEAR CALCULATION
------------------------------

The input shear strains are :
   eszx =     .1080E-03
   eszy =     .2000E-04
The input shear stresses are :
   SZX =     .1040E+01
   SZY =     .1926E+00


RZ-Shear Stresses across the Liner
 Radius     At 0.(Pt 1)    At 90.(Pt 2)     Minimum                  Maximum
                                              .0000E+00              .3328E+00
  1.83       .0000E+00      .0000E+00      !+                                !
  1.86       .4506E-01      .8345E-02      !2  1                             !
  1.90       .8777E-01      .1625E-01      ! 2     1                         !
  1.93       .1283E+00      .2376E-01      !  2        1                     !
  1.96       .1668E+00      .3088E-01      !  2           1                  !
  2.00       .2033E+00      .3765E-01      !   2             1               !
  2.03       .2381E+00      .4409E-01      !   2                1            !
  2.06       .2712E+00      .5022E-01      !    2                  1         !
  2.10       .3027E+00      .5606E-01      !    2                     1      !
  2.13       .3328E+00      .6163E-01      !     2                       1   !

TZ-Shear Stresses across the Liner
 Radius     At 0.(Pt 1)    At 90.(Pt 2)     Minimum                  Maximum
                                             -.2542E+01              .4707E+00
  1.83       .4707E+00     -.2542E+01      !2                                1 !
  1.86       .4623E+00     -.2497E+01      !2                                1 !
  1.90       .4544E+00     -.2454E+01      !2                                1 !
  1.93       .4469E+00     -.2413E+01      ! 2                               1 !
  1.96       .4398E+00     -.2375E+01      ! 2                               1 !
  2.00       .4330E+00     -.2338E+01      ! 2                               1 !
  2.03       .4266E+00     -.2304E+01      !  2                              1 !
  2.06       .4205E+00     -.2271E+01      !  2                              1 !
  2.10       .4146E+00     -.2239E+01      !  2                              1 !
  2.13       .4091E+00     -.2209E+01      !   2                             1 !

Axial Displacement of the Liner
 Radius     At 0.(Pt 1)    At 90.(Pt 2)     Minimum                  Maximum
                                              .7076E-04              .3865E-03
  1.83       .3821E-03      .7076E-04      !2                                1 !
  1.86       .3821E-03      .7077E-04      !2                                1 !
  1.90       .3823E-03      .7080E-04      !2                                1 !
  1.93       .3826E-03      .7086E-04      !2                                1 !
  1.96       .3830E-03      .7093E-04      !2                                1 !
  2.00       .3835E-03      .7103E-04      !2                                1 !
  2.03       .3841E-03      .7114E-04      !2                                1 !
  2.06       .3848E-03      .7127E-04      !2                                1 !
  2.10       .3856E-03      .7141E-04      !2                                1 !
  2.13       .3865E-03      .7157E-04      !2                                 1 !
Time:  15:59: 6
Date:   1/26/89
```

Figure 3-4. SHAFT Code Output: Example 3—Seismic Load Combination (Concluded)

4.0 CODE VERIFICATION

The verification problems described in this section are used to demonstrate that the SHAFT code correctly performs the analysis for which it was intended. Such assurance is provided by demonstrating that all boundary conditions are satisfied, that the solution is consistent with the simpler case of an unlined shaft, that the code is consistent with the equations, and that the results of the analysis are consistent with those obtained using a finite-element code.

Table 4-1 lists the set of conditions for the geometric and material properties assumed for the verification process. The values and choices of units are arbitrary. The assumed conditions do not represent a specific case; thus, the findings of the analyses are considered generalizations, particularly because linear material behavior is assumed. Outputs for all verification analyses are listed in Appendix A.

Table 4-1

GEOMETRY AND MATERIAL PROPERTIES ASSUMED FOR THE VERIFICATION PROCESS

Property	Assumed Value
Radius of unlined shaft	2.5 m
Thickness of liner	0.25 m
Elastic modulus of medium	10,000 MPa
Poisson's ratio of medium	0.2
Elastic modulus of liner	30,000 MPa
Poisson's ratio of liner	0.15

4.1 Consistency with Boundary Conditions—Hoop Deformation

The hoop deformation analysis was performed for the following applied stresses and strains:

xx stress ($\hat{\sigma}_x$) = 10 MPa,
yy stress ($\hat{\sigma}_y$) = 5 MPa,
xy stress ($\hat{\sigma}_{xy}$) = 2.5 MPa, and
axial strain ($\hat{\varepsilon}_z$) = 0.0.

These correspond to a plane strain condition. The corresponding principal stresses and the direction of the principal stress were calculated correctly by SHAFT using Equations 2-74 through 2-76. The results of the calculations are

σ_1 = 11.0 MPa,
σ_2 = 4.0 MPa, and
α = 22.5°,

where α is the direction of σ_1 relative to the xx stress direction.

For both cases discussed below, plane strain conditions were assumed. Two cases are considered: (1) the case of bonding between liner and medium and (2) the case of no shear resistance at the interface.

4.1.1 Bonding of the Liner and Medium

The stresses and displacements listed in Table 4-2 were computed for sample points along three radial lines, including lines parallel to the principal stress directions. The third sample point lies just inside the medium. The following boundary conditions are illustrated by the data in Table 4-2.

- Radial stress (σ_r) and in-plane shear stress (τ_{rt}) vanish at liner interior.
- Hoop (σ_t) and radial stresses approach the applied stresses at a large distance from the shaft.
- Radial stresses are continuous at the interface.
- Radial displacements (u) are continuous at the interface.
- Shear stresses are continuous at the interface.
- Tangential displacements (v) are continuous at the interface.

These boundary conditions are consistent with the boundary conditions expected for this case.

4.1.2 Unbonded Interface of the Liner and Medium

The stresses and displacements listed in Table 4-3 were computed for the sample points along three radial lines, including lines parallel to the principal stress directions. The third point lies just inside the medium. The following conditions are illustrated by the data in Table 4-3.

- Radial stresses (σ_r) and shear stress (τ_{rz}) vanish at the liner interior.
- Radial stresses are continuous at the interface.
- Shear and radial stresses approach the applied stresses at a large distance from the shaft.
- There are no shear stresses at the interface of the liner and medium.

These boundary conditions are consistent with the boundary conditions expected for this case.

4.2 Consistency with Boundary Conditions—Shear Deformations

The shear deformation analysis was performed for the following applied strain: remote xz shear strain (γ_{xz})—0.001. Again, the bonded and unbonded cases were considered.

4.2.1 Bonding of the Liner and Medium

The stresses and displacements listed in Table 4-4 were computed for sample points along three radial lines, including lines parallel to the x and y axes. The third sample point lies just inside the medium. The following conditions are illustrated by the data in Table 4-4.

Table 4-2

RESULTS OF HOOP DEFORMATION ANALYSIS OF A SHAFT WITH A BONDED LINER

Radial Distance (m)	L[a] M[b]	Stresses (MPa)				Displacements (m)	
		σ_r	σ_t	τ_{rt}	σ_z	u	v
			$t = 0°$[c]				
2.25	L	0.0	6.08	0.0	0.91	0.0054	0.0
2.50	L	1.50	13.00	0.0	2.17	0.0054	0.0
2.505	M	1.52	4.70	0.0	1.24	0.0054	0.0
100.00	M	11.03	3.97	0.0	3.00	0.0965	0.0
			$t = 45°$				
2.25	L	0.0	35.69	0.0	5.35	0.0026	0.0025
2.50	L	3.39	32.30	-4.56	5.35	0.0026	0.0022
2.505	M	3.41	11.59	-4.57	3.00	0.0026	0.0022
100.00	M	7.50	7.50	-3.54	3.00	0.0540	0.0425
			$t = 90°$				
2.25	L	0.0	65.31	0.0	9.80	-0.00019	0.0
2.50	L	5.28	51.62	0.0	8.54	-0.00025	0.0
2.505	M	5.28	18.48	0.0	4.76	-0.00025	0.0
100.00	M	3.97	11.04	0.0	3.00	0.01155	0.0

[a] *Liner is denoted by* "L."
[b] *Medium is denoted by* "M."
[c] *t is the angle relative to the direction of the major principal stress.*

Table 4-3

RESULTS OF HOOP DEFORMATION ANALYSIS OF A SHAFT WITH AN UNBONDED LINER

Radial Distance (m)	L[a] M[b]	Stresses (MPa)				Displacements (m)	
		σ_r	σ_t	τ_{rt}	σ_z	u	v
			t = 0 °[c]				
2.25	L	0.0	28.47	0.0	4.27	0.0060	0.0
2.50	L	3.43	38.80	0.0	6.34	0.0060	0.0
2.505	M	3.43	-2.48	0.0	0.19	0.0060	0.0
100.00	M	11.02	3.97	0.0	3.00	0.0965	0.0
			t = 45 °				
2.25	L	0.0	35.70	0.0	5.35	0.0026	-0.0020
2.50	L	3.39	32.30	0.0	5.35	0.0026	-0.0014
2.505	M	3.41	11.59	-0.06	3.00	0.0026	-0.0034
100.00	M	7.50	7.50	-3.50	3.00	0.0540	-0.0425
			t = 90 °				
2.25	L	0.0	42.92	0.0	6.44	-0.00076	0.0
2.50	L	3.36	25.80	0.0	4.37	-0.00080	0.0
2.505	M	3.39	25.61	0.0	5.80	-0.00080	0.0
100.00	M	3.97	11.04	0.0	3.00	0.01152	0.0

[a] *Liner is denoted by* "L."
[b] *Medium is denoted by* "M."
[c] *t is the angle relative to the direction of the major principal stress.*

Table 4-4

RESULTS OF OUT-OF-PLANE SHEAR ANALYSIS OF A SHAFT WITH A BONDED LINER

Radial Distance (m)	L[a] M[b]	Stresses (MPa) τ_{rz}	Stresses (MPa) τ_{rt}	Displacements (m) w
		$\theta = 0°$ [c]		
2.25	L	0.0	0.0	0.0037
2.50	L	2.06	0.0	0.0038
2.505	M	2.07	0.0	0.0038
100.00	M	4.16	0.0	0.100
		$\theta = 45°$		
2.25	L	0.0	-15.34	0.0026
2.50	L	1.46	-13.88	0.0027
2.505	M	1.46	-4.43	0.0027
100.00	M	2.95	-2.95	0.707
		$\theta = 90°$		
2.25	L	0.0	-21.70	0.0
2.50	L	0.0	-19.63	0.0
2.505	M	0.0	-6.26	0.0
100.00	M	0.0	-4.17	0.0

[a] *Liner is denoted by* "L."
[b] *Medium is denoted by* "M."
[c] *θ is the angle relative to the direction of the x axis.*

- Shear stresses are continued at the interface.
- Shear stresses approach the applied stress (i.e., the product of the shear modulus and the applied strain) at points away from the shaft (i.e., 4.167 MPa).

These boundary conditions are consistent with the boundary conditions expected for this case.

4.2.2 Unbonded Interface of the Liner and Medium

The stresses and displacements listed in Table 4-5 were computed for sample points along three radial lines, including lines parallel to the x and y axes. The third sample point lies just inside the medium. The following conditions are illustrated by the data in Table 4-5.

- No loads are transferred to the liner.
- Shear stresses vanish at the interior of the liner.
- Shear stresses approach the product of the shear modulus and the applied strain at points away from the shaft (i.e., 4.167 MPa).
- Shear stresses are continuous at the interface.

These boundary conditions are consistent with the boundary conditions expected for this case.

4.3 Consistency with Solution for an Unlined Shaft

The case considered here is one of a shaft with a radius of 2.25 m in an isotropic medium whose properties are defined earlier (Table 4-1). This case could be treated by adding a liner of no thickness to the interior of the shaft. However, the code is exercised more fully if the problem is treated as one of a lined shaft with the medium and liner ascribed the same properties and the bonded case is selected for the interface of the liner and medium. The liner thickness is immaterial to the analysis, but a value of 0.25 m was selected.

The remote stresses and strains for the case of hoop deformation are

xx stress ($\hat{\sigma}_x$) = 10.0 MPa,
yy stress ($\hat{\sigma}_y$) = 5.0 MPa,
xy stress ($\hat{\tau}_{xy}$) = 2.5 MPa, and
axial strain (ε_z) = 0.001.

The results of the analyses are listed in Table 4-6 and are consistent with the closed-form solution given by Equations 2-5 through 2-7, 2-9, and 2-10. Also, the results confirm that the correct continuity is achieved at the interface that lies at a radial distance of 2.5 m from the center of the shaft.

The remote strain for the pure shear case was given as

xz strain ($\hat{\gamma}_{xz}$) = 0.001.

The results of the analysis are listed in Table 4-7 and are consistent with the closed-form solution given by Equations 2-101 through 2-103. The results also confirm that the correct continuity is achieved at the interface that lies at a radial distance of 2.5 m from the center of the shaft.

Table 4-5

RESULTS OF OUT-OF-PLANE SHEAR ANALYSIS OF A SHAFT WITH AN UNBONDED LINER

Radial Distance (m)	L[a] M[b]	Stresses (MPa) τ_{rz}	Stresses (MPa) τ_{rt}	Displacements (m) w
		$\theta = 0°$[c]		
2.25	L	0.0	0.0	0.00
2.50	L	0.0	0.0	0.00
2.505	M	0.02	0.0	0.0050
100.00	M	4.16	0.0	0.1001
		$\theta = 45°$		
2.25	L	0.0	0.0	0.0
2.50	L	0.0	0.0	0.0
2.505	M	0.01	-5.88	0.0035
100.00	M	2.94	-2.95	0.0708
		$\theta = 90°$		
2.25	L	0.0	0.0	0.0
2.50	L	0.0	0.0	0.0
2.505	M	0.0	-8.32	0.0
100.00	M	0.0	-4.17	0.0

[a] *Liner is denoted by* "L."
[b] *Medium is denoted by* "M."
[c] *θ is the angle relative to the direction of the x axis.*

Table 4-6

RESULTS OF ANALYSIS OF HOOP DEFORMATION OF AN UNLINED SHAFT

Radial Distance (m)	Stresses (MPa)				Displacements (m)	
	σ_r	σ_t	τ_{rt}	σ_z	u	v
			$\theta = 0°$*			
2.25	0.00	5.00	0.0	11.00	0.0049	0.0022
2.50	0.75	6.15	1.63	11.38	0.0049	0.0020
2.505	0.76	6.16	1.65	11.38	0.0049	0.0020
5.00	6.76	6.21	3.21	12.59	0.0050	0.0020
10.00	9.13	5.36	2.73	12.90	0.0073	0.0032
100.00	10.0	5.00	2.50	13.00	0.0641	0.0300
			$\theta = 90°$			
2.25	0.00	25.00	0.00	15.00	0.0006	-0.0022
2.50	2.10	21.00	-1.63	14.62	0.0005	-0.0020
2.505	2.14	20.93	-1.65	14.61	0.0005	-0.0020
5.00	5.20	11.83	-3.21	13.40	0.0002	-0.0019
10.00	5.11	10.40	-2.73	13.10	0.0004	-0.0032
100.00	5.00	10.00	-2.50	13.00	0.0040	-0.0300

* *θ is the angle relative to the direction of the x axis.*

Table 4-7

RESULTS OF ANALYSIS OF SHEAR DEFORMATION OF AN UNLINED SHAFT

Radial Distance (m)	Stresses (MPa) τ_{rz}	Stresses (MPa) $\tau_{\theta z}$	Displacements (m) w
	$\theta = 0°$*		
2.25	0.0	0.0	0.0045
2.50	0.79	0.0	0.0045
2.505	0.81	0.0	0.0045
5.00	3.32	0.0	0.0060
10.00	3.96	0.0	0.0105
100.00	4.17	0.0	0.1001
	$\theta = 90°$		
2.25	0.0	-8.33	0.0
2.50	0.0	-7.54	0.0
2.505	0.0	-7.53	0.0
5.00	0.0	-5.01	0.0
10.00	0.0	-4.38	0.0
100.00	0.0	-4.17	0.0

* *θ is the angle relative to the direction of the x axis.*

4.4 Consistency with Equations

Chapter 2 of this report derives the equations used in the SHAFT code and also provides an explicit solution for the coefficients required for the hoop deformation analysis. To provide an independent check on the SHAFT code, the verification problems presented in Section 4.1.1 are repeated using the SHAFT code and manual substitution into the explicit form of the equations. To simplify the manual calculations, only the stress at the interior face of the liner is considered.

To repeat, the problem analyzed is a shaft with an excavated radius of 2.5 m and a liner that is 0.25 m thick. The elastic moduli of the rock and liner are 10,000 and 30,000 MPa, respectively, and the corresponding Poisson's ratios are 0.2 and 0.15. The imposed free-field principal stresses are 11 and 4 MPa.

For the sake of convenience, the problem is solved in two parts. First, the isotropic component ($\hat{P}$) of the imposed stress field is considered. From Equation 2-14, the stresses at the interior of the liner caused by this component of the stress field are

$$\sigma_{r'} = 0,$$
$$\sigma_{t'} = -\frac{2A'}{a^2}, \text{ and}$$
$$\tau_{rt'} = 0.$$

Upon substitution of the material and geometric parameters in Equation 2-34 and the assumption of zero axial strain, a value for the coefficient A' of -90.3563 is obtained. Hence, the computed hoop stress caused by the isotropic component of 7.5 MPa is 35.70 MPa. An identical value is obtained using the SHAFT code, whether or not bonding at the interface of the medium and liner is assumed. Thus, the isotropic component of the solution is confirmed.

The stresses caused by the deviator component ($\hat{S}$) of the imposed stress field are given by Equations 2-47 through 2-49. For the stresses at the interior of the liner, these simplify to

$$\sigma_{r'} = 0,$$
$$\sigma_{t'} = \left(\frac{4C'}{a^4} + \frac{4D'}{a^2}\right)\cos 2t, \text{ and}$$
$$\tau_{rt'} = 0.$$

Substitution of material parameters in Equations 2-60, 2-61, 2-69, and 2-70 results in values of 646.57 and -90.61 for C' and D' in the bonded case and 507.44 and -91.19 in the unbonded case. Substitution of those coefficients in the above equations yields stresses listed in Table 4-8 for a pure shear stress of 3.5 MPa. For both the bonded and unbonded cases, the results obtained from the equations are in agreement with results obtained using the SHAFT code. Thus, the deviator component of the solution is confirmed.

4.5 Consistency with Finite-Element Analysis

To provide completely independent checks on the results of the SHAFT code, three finite-element analyses of a lined shaft were performed. The assumed values of the parameters for each of these analyses are listed in Table 4-9.

4.5.1 Consistency with the VISCOT Finite-Element Code

The VISCOT finite-element code is one of the performance assessment codes that has been developed and documented by the Office of Nuclear Waste Isolation (INTERA, 1983). For the analyses reported here, Version 4.4 of the microcomputer version of that code was used.

The finite-element model used 380 eight-node quadrilateral elements to represent one-quarter of the lined shaft and the surrounding medium. The liner was represented by a total of 60 elements made up of 3 concentric rings of 20 elements each. The outer ring of these elements was connected directly to the adjacent elements of the medium, which implies that a condition of complete bonding between the liner and medium was simulated. The outer boundaries of the finite-element model were parallel to the two planes of symmetry through the shaft at 15 m from the shaft centerline. Direct stresses of 7.53 and 2.83 MPa were applied at those outer boundaries.

Table 4-7

RESULTS OF ANALYSIS OF SHEAR DEFORMATION OF AN UNLINED SHAFT

Radial Distance (m)	Stresses (MPa) τ_{rz}	Stresses (MPa) $\tau_{\theta z}$	Displacements (m) w
	$\theta = 0°$*		
2.25	0.0	0.0	0.0045
2.50	0.79	0.0	0.0045
2.505	0.81	0.0	0.0045
5.00	3.32	0.0	0.0060
10.00	3.96	0.0	0.0105
100.00	4.17	0.0	0.1001
	$\theta = 90°$		
2.25	0.0	-8.33	0.0
2.50	0.0	-7.54	0.0
2.505	0.0	-7.53	0.0
5.00	0.0	-5.01	0.0
10.00	0.0	-4.38	0.0
100.00	0.0	-4.17	0.0

* *θ is the angle relative to the direction of the x axis.*

4.4 Consistency with Equations

Chapter 2 of this report derives the equations used in the SHAFT code and also provides an explicit solution for the coefficients required for the hoop deformation analysis. To provide an independent check on the SHAFT code, the verification problems presented in Section 4.1.1 are repeated using the SHAFT code and manual substitution into the explicit form of the equations. To simplify the manual calculations, only the stress at the interior face of the liner is considered.

To repeat, the problem analyzed is a shaft with an excavated radius of 2.5 m and a liner that is 0.25 m thick. The elastic moduli of the rock and liner are 10,000 and 30,000 MPa, respectively, and the corresponding Poisson's ratios are 0.2 and 0.15. The imposed free-field principal stresses are 11 and 4 MPa.

For the sake of convenience, the problem is solved in two parts. First, the isotropic component ($\hat{P}$) of the imposed stress field is considered. From Equation 2-14, the stresses at the interior of the liner caused by this component of the stress field are

$$\sigma_{r'} = 0,$$
$$\sigma_{t'} = -\frac{2A'}{a^2}, \text{ and}$$
$$\tau_{rt'} = 0.$$

Upon substitution of the material and geometric parameters in Equation 2-34 and the assumption of zero axial strain, a value for the coefficient A' of -90.3563 is obtained. Hence, the computed hoop stress caused by the isotropic component of 7.5 MPa is 35.70 MPa. An identical value is obtained using the SHAFT code, whether or not bonding at the interface of the medium and liner is assumed. Thus, the isotropic component of the solution is confirmed.

The stresses caused by the deviator component ($\hat{S}$) of the imposed stress field are given by Equations 2-47 through 2-49. For the stresses at the interior of the liner, these simplify to

$$\sigma_{r'} = 0,$$
$$\sigma_{t'} = \left(\frac{4C'}{a^4} + \frac{4D'}{a^2}\right)\cos 2t, \text{ and}$$
$$\tau_{rt'} = 0.$$

Substitution of material parameters in Equations 2-60, 2-61, 2-69, and 2-70 results in values of 646.57 and -90.61 for C' and D' in the bonded case and 507.44 and -91.19 in the unbonded case. Substitution of those coefficients in the above equations yields stresses listed in Table 4-8 for a pure shear stress of 3.5 MPa. For both the bonded and unbonded cases, the results obtained from the equations are in agreement with results obtained using the SHAFT code. Thus, the deviator component of the solution is confirmed.

4.5 Consistency with Finite-Element Analysis

To provide completely independent checks on the results of the SHAFT code, three finite-element analyses of a lined shaft were performed. The assumed values of the parameters for each of these analyses are listed in Table 4-9.

4.5.1 Consistency with the VISCOT Finite-Element Code

The VISCOT finite-element code is one of the performance assessment codes that has been developed and documented by the Office of Nuclear Waste Isolation (INTERA, 1983). For the analyses reported here, Version 4.4 of the microcomputer version of that code was used.

The finite-element model used 380 eight-node quadrilateral elements to represent one-quarter of the lined shaft and the surrounding medium. The liner was represented by a total of 60 elements made up of 3 concentric rings of 20 elements each. The outer ring of these elements was connected directly to the adjacent elements of the medium, which implies that a condition of complete bonding between the liner and medium was simulated. The outer boundaries of the finite-element model were parallel to the two planes of symmetry through the shaft at 15 m from the shaft centerline. Direct stresses of 7.53 and 2.83 MPa were applied at those outer boundaries.

Table 4-8

COMPARISON OF MANUAL AND SHAFT CALCULATIONS OF HOOP DEFORMATION RESULTING FROM PURE SHEAR

	Hoop Stress Bonded Case (MPa)		Hoop Stress Unbonded Case (MPa)	
Angle	**Manual**	**SHAFT**	**Manual**	**SHAFT**
0.0	29.32	29.32	7.15	7.15
22.5	20.73	20.73	5.05	5.06
45.0	0.0	0.0	0.0	0.0
67.5	-20.73	-20.73	-5.05	-5.06
90.0	-29.32	-29.32	-7.15	-7.15

Table 4-9

PARAMETERS USED TO PERFORM A COMPARISON BETWEEN THE RESULTS OBTAINED FROM THE SHAFT CODE AND THE VISCOT CODE

Parameter	Assigned Value
Excavated radius of shaft	2.13 m
Liner thickness	0.3 m
Rock mass modulus	15,200 MPa
Rock mass Poisson's ratio	0.22
Liner modulus	28,000 MPa
Liner Poisson's ratio	0.15
Imposed maximum stress (σ_{xx})	7.53 MPa
Imposed minimum stress (σ_{yy})	2.83 MPa
Axial strain	0

The results of the VISCOT and SHAFT analyses are listed in Tables 4-10 and 4-11, with the output files reproduced in Appendix B. Displacements are along radial lines parallel to the applied stress and are given in Table 4-10. Stresses are given for the Gauss integration points of the elements adjacent to those two lines in Table 4-11. Examination of the displacements of the liner reveals that the finite-element prediction of the closure parallel to the direction of maximum applied stress is slightly higher than the SHAFT code prediction. This difference is attributed to the fact that, for the finite-element model, there is a "following" load at a relatively close distance (15 m) from the shaft centerline, and the SHAFT code simulates an infinite region in which applied stress is defined in the far field. This difference is evident when the boundary displacements for the finite-element model are compared with displacements that would occur in an unbounded body. Despite the differences between the absolute displacements computed using the two models, the predicted changes in liner thickness are in good agreement (exact to four figures).

Examination of the computed stresses in the liner reveals that the finite-element model predicts a slightly higher range of stresses, which is consistent with the displacements discussed above. Overall, the two solutions appear at be in substantial agreement, and the differences are attributable to the different "remote" boundary conditions of the two models.

Table 4-10

RESULTS OF ANALYSIS OF DISPLACEMENTS IN A LINED SHAFT USING THE SHAFT CODE AND THE VISCOT FINITE-ELEMENT CODE

Sample Point		Radial Displacements ($\times 10^{-3}$ m)	
Radial Distance (m)	**θ***	**SHAFT**	**VISCOT**
1.83	0°	2.067	2.128
2.13	0°	2.064	2.125
15.00	0°	6.507	6.673
1.83	90°	0.003	-0.037
2.13	90°	-0.026	-0.066
15.00	90°	0.626	0.549

* θ *is the angle relative to direction of the x axis.*

Table 4-11

RESULTS OF ANALYSIS OF STRESSES IN A LINED SHAFT USING THE SHAFT CODE AND THE VISCOT FINITE-ELEMENT CODE

Sample Point		SHAFT		VISCOT	
Radial Distance (m)	θ*	Hoop Stress (MPa)	Radial Stress (MPa)	Hoop Stress (MPa)	Radial Stress (MPa)
1.851	0.95°	2.549	0.030	2.08	0.03
1.909	0.95°	3.434	0.163	3.02	0.149
1.951	0.95°	3.991	0.295	3.61	0.276
2.009	0.95°	4.664	0.514	4.33	0.485
2.051	0.95°	5.092	0.693	4.79	0.664
2.109	0.95°	5.614	0.961	5.34	0.931
1.851	89.05°	29.48	0.335	30.6	0.38
1.909	89.05°	27.65	1.115	28.4	1.25
1.951	89.05°	26.46	1.652	27.1	1.76
2.009	89.05°	24.97	2.244	25.6	2.33
2.051	89.05°	24.00	2.609	24.6	2.69
2.109	89.05°	22.78	3.041	23.3	3.12

* θ *is the angle relative to direction of the x axis.*

4.5.2 Comparison with the JAC Finite-Element Code

The JAC code, developed by Sandia National Laboratories (Biffle, 1984), is one of the codes undergoing benchmark testing for use in repository design for the YMP. An important difference between the JAC code and the VISCOT code is that the JAC code allows the introduction of slip lines or interfaces. It is therefore possible to simulate the slip option available in the SHAFT code.

The physical problem analyzed is defined in Table 4-9; both complete bonding and slip conditions were considered. The JAC mesh has the same overall dimensions and boundary conditions as those of the VISCOT analysis, but had six concentric rings of four node elements to represent the lining. In the fully bonded case no slip was allowed to the contact between the liner and the medium, while in the slip case the relative shear displacement of the liner and medium was unconstrained. The total number of nodes and elements in the finite-element mesh were 357 and 304 for the fully bonded and slip conditions, respectively.

The JAC and SHAFT results are listed in Tables 4-12 and 4-13 for the fully bonded and slip conditions, respectively. Appendix B lists the output for these two runs. The hoop stresses are also shown in Figure 4-1, which illustrates the hoop stress along two lines, one 2.81° off the x axis, the other 87.19° off the x axis. These radial lines correspond to lines through the centroid of the four-node JAC elements and differ slightly from the sample lines used for the VISCOT analyses.

The good correspondence between the JAC and SHAFT runs is evident (Figure 4-1 and Tables 4-12 and 4-13), despite the use of a relatively coarse finite-element mesh. The bonded analyses are within 3% on the 87.19° radial line and within 14% on the 2.81° radial line. The correspondence is a little poorer for the unbonded (slip allowed) case, with differences as high as 9%. The difference for the unbonded case is most likely attributable to the physical approximation of the interface between the liner and the medium as a series of straight line segments rather than a circle. The results of the JAC analysis are also influenced by the numerical tolerances selected.

Table 4-12

RESULTS OF ANALYSIS OF A LINED SHAFT USING THE SHAFT CODE AND THE JAC CODE—STRESSES WHEN THE LINER IS BONDED TO THE MEDIUM

		JAC[a]		SHAFT[b]	
Radial Distance (m)	θ[c]	Hoop Stress (MPa)	Radial Stress (MPa)	Hoop Stress (MPa)	Radial Stress (MPa)
1.855	2.81°	-2.31	-0.16	2.67	0.04
1.905	2.81°	-3.03	-0.28	3.43	0.15
1.955	2.81°	-3.72	-0.55	4.09	0.31
2.005	2.81°	-4.28	-0.59	4.66	0.50
2.055	2.81°	-4.76	-0.85	5.17	0.71
2.105	2.81°	-5.20	-1.20	5.62	0.95
1.855	87.19°	-29.52	-0.49	29.29	0.39
1.905	87.19°	-28.00	-1.10	27.71	1.10
1.955	87.19°	-26.66	-1.56	26.30	1.69
2.005	87.19°	-25.52	-2.16	25.02	2.20
2.055	87.19°	-24.37	-2.33	23.87	2.64
2.105	87.19°	-23.40	-3.02	22.82	3.01

[a] *JAC compressive stress is denoted by "-."*
[b] *SHAFT compressive stress is denoted by "+."*
[c] *θ is the angle relative to the direction of the x axis.*

Table 4-13

RESULTS OF ANALYSIS OF A LINED SHAFT USING THE SHAFT CODE AND THE JAC CODE—STRESSES WHEN SLIP IS ALLOWED BETWEEN THE LINER AND MEDIUM

		JAC[a]		SHAFT[b]	
Radial Distance (m)	θ[c]	Hoop Stress (MPa)	Radial Stress (MPa)	Hoop Stress (MPa)	Radial Stress (MPa)
1.855	2.81°	-13.56	-0.28	+12.43	+0.16
1.905	2.81°	-14.17	-0.77	+13.50	+0.51
1.955	2.81°	-14.90	-1.02	+14.52	+0.87
2.005	2.81°	-15.77	-1.73	+15.50	+1.23
2.055	2.81°	-16.59	-2.08	+16.44	+1.61
2.105	2.81°	-17.45	-2.83	+17.35	+1.97
1.855	87.19°	-18.00	-0.00	19.53	0.27
1.905	87.19°	-16.82	-0.53	17.64	0.74
1.955	87.19°	-15.40	-0.49	15.87	1.13
2.005	87.19°	-14.11	-1.45	14.19	1.47
2.055	87.19°	-13.00	-1.46	12.60	1.74
2.105	87.19°	-12.00	-1.92	11.09	1.98

[a] *JAC compressive stress id denoted by "-."*
[b] *SHAFT compressive stress is denoted by "+."*
[c] *θ is the angle relative to the direction of the x axis.*

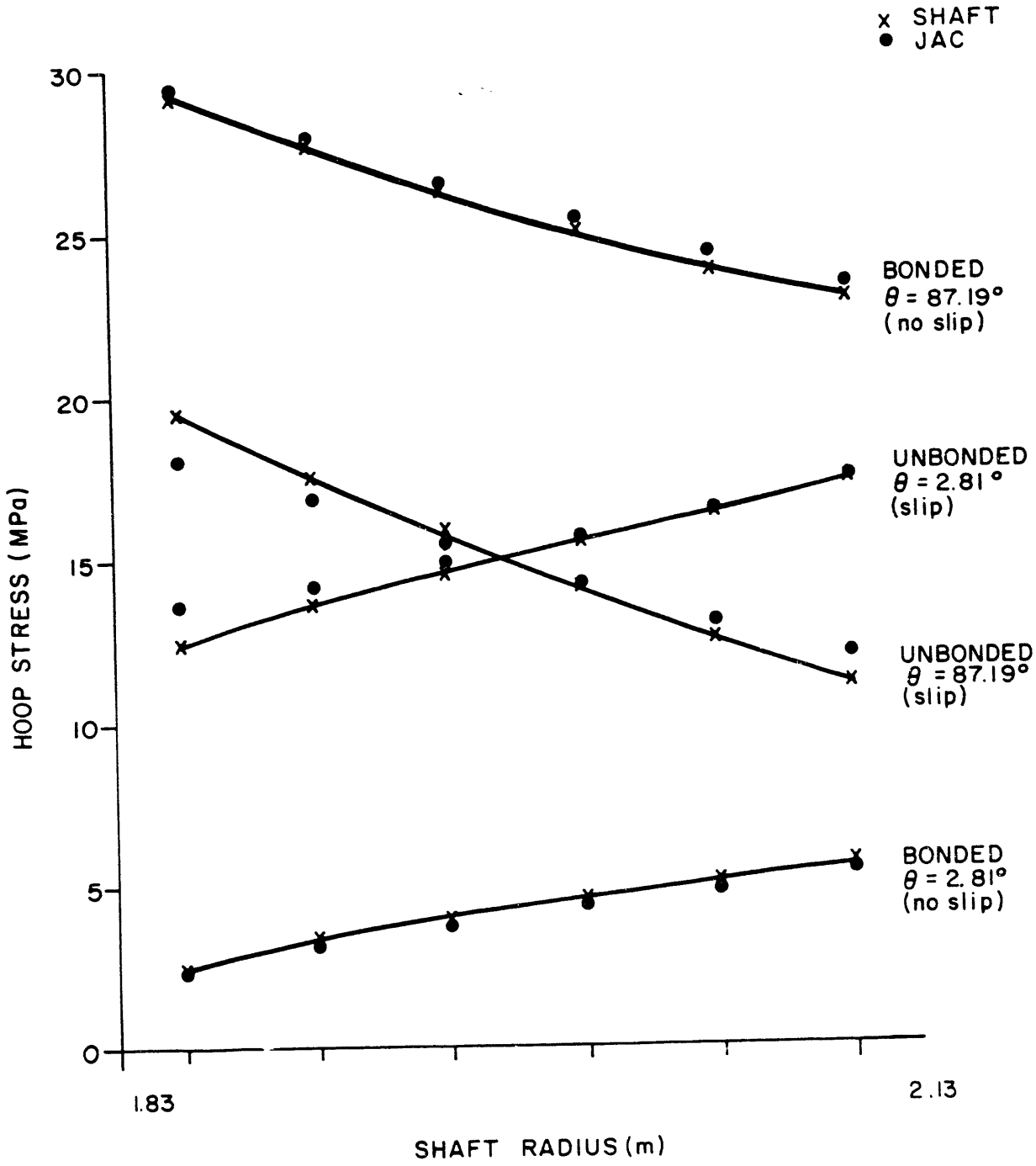

Figure 4-1. Comparison of JAC and SHAFT Results of Hoop Stress with Slip Allowed Between the Liner and Medium and with Bonding Between the Liner and Medium

5.0 REFERENCES

Beskin, L., 1944. Journal of Applied Mechanics, "Strengthening of Circular Holes in Plates Under Edge Loads," 66:A140-148, np. (NNA.890713.0168)

Biffle, J. H., 1984. JAC—A Two-Dimensional Finite Element Computer Program for the Non-Linear Quasistatic Response of Solids with the Conjugate Gradient Method, SAND81-0998, Sandia National Laboratories, Albuquerque, NM. (HQS.880517.2257)

PB-KBB (Fluor Technology, Inc., Parsons Brinckerhoff), and others, 1987. "Salt Repository Project Shaft Design Guide, Revision 0—December," prepared for the U. S. Department of Energy Office of Civilian Radioactive Waste Management, Salt Repository Project Office. (NNA.890713.0227)

INTERA Environmental Consultants, 1983. VISCOT: A Two-Dimensional and Axi-symmetric Nonlinear Transient Thermo-Viscoelastic and Thermo-Viscoplastic Finite-Element Code for Modeling the Time-Dependent Viscous Mechanical Behavior of a Rock Mass, ONWI-437, Office of Nuclear Waste Isolation, Battelle Project Management Division, Houston, TX. (NNA.910412.0019)

Jaeger, J. C., and N. G. W. Cook, 1979. Fundamentals of Rock Mechanics, Chapter 12, p. 112, 250, 252, and 253, Chapman and Hall, London, England. (NNA.910326.0057)

Richardson, A. M., 1990. Preliminary Shaft Liner Design Criteria and Methodology Guide, SAND88-7060, Sandia National Laboratories, Albuquerque, NM. (NNA.900305.0001)

St. John, C. M., D. E. Van Dillen, and E. Detournay, 1983. An Investigation of the Failure Resistance of Rockbolted Tunnels for Deep Missile Basing, R-8227-5534, Agbabian Associates, El Segundo, CA. (NNA.891107.0111)

St. John, C. M., and T. Z. Zahrah, 1987. Tunnelling and Underground Space Technology, "Aseismic Design of Underground Structures," 2(2):165-197, Pergamon Journals, Ltd. (NNA.900308.0326)

APPENDIX A

VERIFICATION PROBLEMS

```
*****************************************************************************************
*                                                                                       *
*      SSSSSSSS        HH       HH           AA           FFFFFFFFFFF   TTTTTTTTTTTTTT  *
*     SS     SSS      HH       HH          AAAA          FFFFFFFFFFF   TTTTTTTTTTTTTT  *
*    SS                HH       HH         AA  AA         FF                  TT        *
*     SSS              HHHHHHHHHHH        AA    AA        FF                  TT        *
*        SSS           HHHHHHHHHHH       AAAAAAAAAA       FFFFFF              TT        *
*           SSS        HH       HH      AAAAAAAAAAAA      FFFFFF              TT        *
*             SS       HH       HH     AA          AA     FF                  TT        *
*    SSS     SS        HH       HH    AA            AA    FF                  TT        *
*     SSSSSSSS         HH       HH    AA            AA    FF                  TT        *
*                                                                                       *
*****************************************************************************************
```

Analytical solutions for a lined circular hole

Code: SHAFT. Version 3.02, upgraded for SANDIA/NNWSI Jan 20, 1989
J.F.T. Agapito and Associates
Grand Junction (303) 242 4220

Hoop deformation analysis for sec. 5.1 (bonded)

Analysis completed by :jra
The QA version of this code is : SHAFT 3.02
Plane strain analysis

Bonding between shaft wall and liner is assumed

Geometry and Properties of Shaft and Liner

```
Radius of unlined hole....... =      2.5000
Lining thickness............ =       .2500
Elastic modulus of medium.... =   .1000E+05
Poissons ratio of medium..... =   .2000E+00
Elastic modulus of liner..... =   .3000E+05
Poissons ratio of liner...... =   .1500E+00
```

HOOP AND AXIAL DEFORMATION CALCULATION

```
The input in-plane stresses are :
   SX =    .1000E+02
   SY =    .5000E+01
   SXY =    .2500E+01
The axial strain (ESZ) is :     .0000E+00

The principal stresses are :
   SIG1 =    .1104E+02
   SIG3 =    .3964E+01
The major stress is inclined at  22.5 degrees relative to the X axis

The Interaction Calculation Predicts

Angle from XX stress direction =   22.5
Radius   RR-Stress   TT-Stress   RT-Stress   ZZ-Stress   Radial Displ.  Hoop Displ.
   2.250   .0000E+00   .6082E+01   .0000E+00   .9124E+00   .5428E-02   .7629E-08
   2.500   .1498E+01   .1299E+02   .1397E-04   .2174E+01   .5419E-02   .6711E-08
   2.505   .1522E+01   .4705E+01   .1400E-04   .1245E+01   .5419E-02   .6706E-08
 100.000   .1103E+02   .3967E+01   .1084E-04   .2999E+01   .9651E-01   .1300E-06
Angle from XX stress direction =   67.5
Radius   RR-Stress   TT-Stress   RT-Stress   ZZ-Stress   Radial Displ.  Hoop Displ.
   2.250   .0000E+00   .3569E+02   .0000E+00   .5354E+01   .2617E-02  -.2491E-02
   2.500   .3391E+01   .3230E+02  -.4560E+01   .5354E+01   .2583E-02  -.2191E-02
   2.505   .3407E+01   .1159E+02  -.4570E+01   .3000E+01   .2583E-02  -.2190E-02
 100.000   .7497E+01   .7503E+01  -.3538E+01   .3000E+01   .5403E-01  -.4245E-01
Angle from XX stress direction =  112.5
Radius   RR-Stress   TT-Stress   RT-Stress   ZZ-Stress   Radial Displ.  Hoop Displ.
   2.250   .0000E+00   .6531E+02   .0000E+00   .9796E+01  -.1944E-03  -.4967E-07
   2.500   .5284E+01   .5162E+02  -.9093E-04   .8535E+01  -.2539E-03  -.4369E-07
   2.505   .5292E+01   .1848E+02  -.9112E-04   .4755E+01  -.2536E-03  -.4366E-07
 100.000   .3967E+01   .1104E+02  -.7055E-04   .3001E+01   .1155E-01  -.8464E-06

The Interaction Calculation for the liner
predicts the stresses listed below.
Note that the reference angle is the
first principal stress direction
```

Hoop Stresses in the Liner

Radius	At 0.(Pt 1)	At 90.(Pt 2)	Minimum .6082E+01	Maximum .6531E+02
2.25	.6082E+01	.6531E+02	!1	2 !
2.28	.7033E+01	.6349E+02	!1	2 !
2.31	.7929E+01	.6176E+02	!1	2 !
2.33	.8775E+01	.6011E+02	! 1	2 !
2.36	.9574E+01	.5854E+02	! 1	2 !
2.39	.1033E+02	.5703E+02	! 1	2 !
2.42	.1105E+02	.5559E+02	! 1	2 !
2.44	.1173E+02	.5421E+02	! 1	2 !
2.47	.1238E+02	.5289E+02	! 1	2 !
2.50	.1299E+02	.5162E+02	! 1	2 !

Radial Stresses in the Liner

Radius	At 0.(Pt 1)	At 90.(Pt 2)	Minimum .0000E+00	Maximum .5284E+01
2.25	.0000E+00	.0000E+00	!+	!
2.28	.8870E-01	.7766E+00	!1 2	!
2.31	.2026E+00	.1497E+01	! 1 2	!
2.33	.3388E+00	.2165E+01	! 1 2	!
2.36	.4947E+00	.2786E+01	! 1 2	!
2.39	.6682E+00	.3362E+01	! 1 2	!
2.42	.8570E+00	.3897E+01	! 1 2	!
2.44	.1059E+01	.4394E+01	! 1 2	!
2.47	.1273E+01	.4855E+01	! 1 2	!
2.50	.1498E+01	.5284E+01	! 1 2	!

Axial Stresses in the Liner

Radius	At 0.(Pt 1)	At 90.(Pt 2)	Minimum .9124E+00	Maximum .9796E+01
2.25	.9124E+00	.9796E+01	!1	2 !
2.28	.1068E+01	.9640E+01	!1	2 !
2.31	.1220E+01	.9489E+01	! 1	2 !
2.33	.1367E+01	.9341E+01	! 1	2 !
2.36	.1510E+01	.9198E+01	! 1	2 !
2.39	.1650E+01	.9059E+01	! 1	2 !
2.42	.1786E+01	.8923E+01	! 1	2 !
2.44	.1918E+01	.8790E+01	! 1	2 !
2.47	.2047E+01	.8661E+01	! 1	2 !
2.50	.2174E+01	.8535E+01	! 1	2 !

Radial Displacements in the Liner

Radius	At 0.(Pt 1)	At 90.(Pt 2)	Minimum -.2539E-03	Maximum .5428E-02
2.25	.5428E-02	-.1944E-03	!2	1 !
2.28	.5427E-02	-.2044E-03	!2	1 !
2.31	.5426E-02	-.2133E-03	!2	1 !
2.33	.5425E-02	-.2214E-03	!2	1 !
2.36	.5424E-02	-.2286E-03	!2	1 !
2.39	.5423E-02	-.2351E-03	!2	1 !
2.42	.5422E-02	-.2408E-03	!2	1 !
2.44	.5421E-02	-.2458E-03	!2	1 !
2.47	.5420E-02	-.2502E-03	!2	1 !
2.50	.5419E-02	-.2539E-03	!2	1 !

Hoop Displacements in the Liner

Radius	At 0.(Pt 1)	At 90.(Pt 2)	Minimum -.4195E-07	Maximum .0000E+00
2.25	.0000E+00	-.4195E-07	!2	1 !
2.28	.0000E+00	-.4131E-07	!2	1 !
2.31	.0000E+00	-.4070E-07	!2	1 !
2.33	.0000E+00	-.4010E-07	! 2	1 !
2.36	.0000E+00	-.3953E-07	! 2	1 !
2.39	.0000E+00	-.3897E-07	! 2	1 !
2.42	.0000E+00	-.3843E-07	! 2	1 !
2.44	.0000E+00	-.3790E-07	! 2	1 !
2.47	.0000E+00	-.3740E-07	! 2	1 !
2.50	.0000E+00	-.3690E-07	! 2	1 !

Time: 16:56:32
Date: 1/26/89

```
*****************************************************************************************
*                                                                                       *
*      SSSSSSSS        HH        HH           AA           FFFFFFFFFFF   TTTTTTTTTTTTTT  *
*     SS     SSS      HH        HH          AAAA          FFFFFFFFFFF   TTTTTTTTTTTTTT  *
*    SS               HH        HH         AA  AA         FF                  TT        *
*     SSS             HHHHHHHHHHH         AA    AA        FF                  TT        *
*        SSS          HHHHHHHHHHH        AAAAAAAAAA       FFFFFF              TT        *
*           SSS       HH        HH       AAAAAAAAAAAA     FFFFFF              TT        *
*             SS      HH        HH      AA          AA    FF                  TT        *
*    SSS     SS       HH        HH     AA            AA   FF                  TT        *
*     SSSSSSSS        HH        HH     AA            AA   FF                  TT        *
*                                                                                       *
*****************************************************************************************
```

Analytical solutions for a lined circular hole

Code: SHAFT. Version 3.02, upgraded for SANDIA/NNWSI Jan 20, 1989
J.F.T. Agapito and Associates
Grand Junction (303) 242 4220

Hoop deformation analysis for section 5.1 (unbonded)

Analysis completed by :jra
The QA version of this code is : SHAFT 3.02
Plane strain analysis

Slip allowed between liner and shaft wall

Geometry and Properties of Shaft and Liner

```
Radius of unlined hole....... =      2.5000
Lining thickness............ =       .2500
Elastic modulus of medium.... =   .1000E+05
Poissons ratio of medium..... =   .2000E+00
Elastic modulus of liner..... =   .3000E+05
Poissons ratio of liner...... =   .1500E+00
```

HOOP AND AXIAL DEFORMATION CALCULATION

```
The input in-plane stresses are :
   SX =     .1000E+02
   SY =     .5000E+01
   SXY =     .2500E+01
The axial strain (ESZ) is :      .0000E+00

The principal stresses are :
   SIG1 =     .1104E+02
   SIG3 =     .3964E+01
The major stress is inclined at  22.5 degrees relative to the X axis

The Interaction Calculation Predicts

Angle from XX stress direction =   22.5
Radius    RR-Stress    TT-Stress    RT-Stress    ZZ-Stress    Radial Displ.  Hoop Displ.
   2.250   .0000E+00   .2847E+02   .0000E+00   .4271E+01   .5998E-02   .5988E-08
   2.500   .3427E+01   .3880E+02  -.5509E-11   .6335E+01   .5963E-02   .4366E-08
   2.505   .3415E+01  -.2429E+01   .1718E-06   .1972E+00   .5965E-02   .1034E-07
 100.000   .1102E+02   .3967E+01   .1084E-04   .2998E+01   .9654E-01   .1300E-06
Angle from XX stress direction =   67.5
Radius    RR-Stress    TT-Stress    RT-Stress    ZZ-Stress    Radial Displ.  Hoop Displ.
   2.250   .0000E+00   .3570E+02   .0000E+00   .5354E+01   .2617E-02  -.1955E-02
   2.500   .3391E+01   .3230E+02   .1799E-05   .5354E+01   .2583E-02  -.1426E-02
   2.505   .3407E+01   .1159E+02  -.5609E-01   .3000E+01   .2583E-02  -.3377E-02
 100.000   .7497E+01   .7503E+01  -.3540E+01   .3000E+01   .5403E-01  -.4246E-01
Angle from XX stress direction =  112.5
Radius    RR-Stress    TT-Stress    RT-Stress    ZZ-Stress    Radial Displ.  Hoop Displ.
   2.250   .0000E+00   .4292E+02   .0000E+00   .6438E+01  -.7642E-03  -.3899E-07
   2.500   .3355E+01   .2580E+02   .3587E-10   .4374E+01  -.7977E-03  -.2843E-07
   2.505   .3399E+01   .2561E+02  -.1118E-05   .5803E+01  -.7992E-03  -.6734E-07
 100.000   .3971E+01   .1104E+02  -.7059E-04   .3002E+01   .1152E-01  -.8466E-06

The Interaction Calculation for the liner
predicts the stresses listed below.
Note that the reference angle is the
first principal stress direction
```

Hoop Stresses in the Liner

Radius	At 0.(Pt 1)	At 90.(Pt 2)
2.25	.2847E+02	.4292E+02
2.28	.2972E+02	.4080E+02
2.31	.3094E+02	.3875E+02
2.33	.3213E+02	.3676E+02
2.36	.3329E+02	.3482E+02
2.39	.3443E+02	.3293E+02
2.42	.3555E+02	.3109E+02
2.44	.3665E+02	.2929E+02
2.47	.3773E+02	.2753E+02
2.50	.3880E+02	.2580E+02

```
Minimum                    Maximum
 .2580E+02                 .4292E+02
!    1                          2  !
!      1                      2     !
!        1                  2       !
!          1            2           !
!            1  2                   !
!            2 1                    !
!        2        1                 !
!      2            1               !
!  2                  1             !
!2                      1           !
```

Radial Stresses in the Liner

Radius	At 0.(Pt 1)	At 90.(Pt 2)
2.25	.0000E+00	.0000E+00
2.28	.3569E+00	.5084E+00
2.31	.7232E+00	.9763E+00
2.33	.1097E+01	.1407E+01
2.36	.1477E+01	.1803E+01
2.39	.1862E+01	.2168E+01
2.42	.2251E+01	.2503E+01
2.44	.2642E+01	.2811E+01
2.47	.3034E+01	.3095E+01
2.50	.3427E+01	.3355E+01

```
Minimum                    Maximum
 .0000E+00                 .3427E+01
!+                                   !
!   12                               !
!      1 2                           !
!         1 2                        !
!            1  2                    !
!               1  2                 !
!                  1 2               !
!                     12             !
!                        12          !
!                           21       !
```

Axial Stresses in the Liner

Radius	At 0.(Pt 1)	At 90.(Pt 2)
2.25	.4271E+01	.6438E+01
2.28	.4512E+01	.6197E+01
2.31	.4750E+01	.5959E+01
2.33	.4984E+01	.5724E+01
2.36	.5216E+01	.5493E+01
2.39	.5444E+01	.5264E+01
2.42	.5670E+01	.5038E+01
2.44	.5894E+01	.4815E+01
2.47	.6115E+01	.4593E+01
2.50	.6335E+01	.4374E+01

```
Minimum                    Maximum
 .4271E+01                 .6438E+01
!1                                2  !
!   1                          2     !
!      1                     2       !
!         1              2           !
!            1   2                   !
!             2 1                    !
!          2        1                !
!        2              1            !
!    2                    1         !
! 2                          1      !
```

Radial Displacements in the Liner

Radius	At 0.(Pt 1)	At 90.(Pt 2)
2.25	.5998E-02	-.7642E-03
2.28	.5993E-02	-.7706E-03
2.31	.5989E-02	-.7763E-03
2.33	.5985E-02	-.7813E-03
2.36	.5981E-02	-.7855E-03
2.39	.5977E-02	-.7891E-03
2.42	.5973E-02	-.7921E-03
2.44	.5970E-02	-.7945E-03
2.47	.5966E-02	-.7964E-03
2.50	.5963E-02	-.7977E-03

```
Minimum                    Maximum
 -.7977E-03                .5998E-02
!2                                1 !
!2                              1   !
!2                              1   !
!2                              1   !
!2                              1   !
!2                              1   !
!2                              1   !
!2                              1   !
!2                              1   !
!2                              1   !
```

Hoop Displacements in the Liner

Radius	At 0.(Pt 1)	At 90.(Pt 2)
2.25	.0000E+00	-.3293E-07
2.28	.0000E+00	-.3193E-07
2.31	.0000E+00	-.3094E-07
2.33	.0000E+00	-.2995E-07
2.36	.0000E+00	-.2896E-07
2.39	.0000E+00	-.2797E-07
2.42	.0000E+00	-.2699E-07
2.44	.0000E+00	-.2600E-07
2.47	.0000E+00	-.2501E-07
2.50	.0000E+00	-.2401E-07

```
Minimum                    Maximum
 -.3293E-07                .0000E+00
!2                                1 !
!2                              1   !
! 2                             1   !
!  2                            1   !
!   2                           1   !
!    2                          1   !
!     2                         1   !
!      2                        1   !
!       2                       1   !
!        2                      1   !
```

Time: 17: 0:48
Date: 1/26/89

```
*****************************************************************************************
*                                                                                       *
*      SSSSSSSS       HH       HH          AA          FFFFFFFFFFF   TTTTTTTTTTTTTT    *
*     SS     SSS      HH       HH         AAAA         FFFFFFFFFFF   TTTTTTTTTTTTTT    *
*    SS               HH       HH        AA  AA        FF                  TT          *
*     SSS             HHHHHHHHHHH       AA    AA       FF                  TT          *
*        SSS          HHHHHHHHHHH      AAAAAAAAAA      FFFFFF              TT          *
*           SSS       HH       HH     AAAAAAAAAAAA     FFFFFF              TT          *
*             SS      HH       HH    AA          AA    FF                  TT          *
*    SSS     SS       HH       HH   AA            AA   FF                  TT          *
*     SSSSSSSS        HH       HH   AA            AA   FF                  TT          *
*                                                                                       *
*****************************************************************************************
```

Analytical solutions for a lined circular hole

Code: SHAFT. Version 3.02, upgraded for SANDIA/NNWSI Jan 20, 1989
J.F.T. Agapito and Associates
Grand Junction (303) 242 4220

Shear deformation analysis for sec. 5.2 (bonded)

Analysis completed by :jra
The QA version of this code is : SHAFT 3.02
Plane strain analysis

Bonding between shaft wall and liner is assumed

Geometry and Properties of Shaft and Liner

```
Radius of unlined hole....... =      2.5000
Lining thickness............. =       .2500
Elastic modulus of medium.... =   .1000E+05
Poissons ratio of medium..... =   .2000E+00
Elastic modulus of liner..... =   .3000E+05
Poissons ratio of liner...... =   .1500E+00
```

OUT-OF-PLANE SHEAR CALCULATION

```
The input shear strains are :
   eszx =     .1000E-02
   eszy =     .0000E+00
The input shear stresses are :
   SZX =     .4167E+01
   SZY =     .0000E+00

Angle from XX-stress direction =      .0
Radius   RZ-Stress   TZ-Stress   Axial Displ.
   2.250   .0000E+00   .0000E+00   .3743E-02
   2.500   .2061E+01   .0000E+00   .3763E-02
   2.505   .2070E+01   .0000E+00   .3766E-02
 100.000   .4165E+01   .0000E+00   .1000E+00
Angle from XX-stress direction =   45.0
Radius   RZ-Stress   TZ-Stress   Axial Displ.
   2.250   .0000E+00  -.1534E+02   .2646E-02
   2.500   .1457E+01  -.1388E+02   .2661E-02
   2.505   .1463E+01  -.4429E+01   .2663E-02
 100.000   .2945E+01  -.2947E+01   .7073E-01
Angle from XX-stress direction =   90.0
Radius   RZ-Stress   TZ-Stress   Axial Displ.
   2.250   .0000E+00  -.2170E+02   .3142E-07
   2.500   .1730E-04  -.1963E+02   .3159E-07
   2.505   .1737E-04  -.6264E+01   .3161E-07
 100.000   .3496E-04  -.4168E+01   .8397E-06

RZ-Shear Stresses across the Liner
 Radius    At 0.(Pt 1)   At 90.(Pt 2)    Minimum                 Maximum
                                          .0000E+00             .2061E+01
  2.25      .0000E+00     .0000E+00     !+                                !
  2.28      .2630E+00     .2207E-05     !2  1                             !
  2.31      .5165E+00     .4335E-05     !2      1                         !
  2.33      .7610E+00     .6388E-05     !2          1                     !
  2.36      .9970E+00     .8369E-05     !2              1                 !
  2.39      .1225E+01     .1028E-04     !2                  1             !
  2.42      .1445E+01     .1213E-04     !2                      1         !
```

```
  2.44      .1657E+01     .1391E-04     !2                        1        !
  2.47      .1863E+01     .1563E-04     !2                           1     !
  2.50      .2061E+01     .1730E-04     !2                              1 !

TZ-Shear Stresses across the Liner
 Radius    At 0.(Pt 1)   At 90.(Pt 2)    Minimum                  Maximum
                                         -.2170E+02              .0000E+00
  2.25      .0000E+00    -.2170E+02     !2                              1  !
  2.28      .0000E+00    -.2143E+02     !2                              1  !
  2.31      .0000E+00    -.2118E+02     !2                              1  !
  2.33      .0000E+00    -.2093E+02     ! 2                             1  !
  2.36      .0000E+00    -.2070E+02     ! 2                             1  !
  2.39      .0000E+00    -.2047E+02     ! 2                             1  !
  2.42      .0000E+00    -.2025E+02     ! 2                             1  !
  2.44      .0000E+00    -.2004E+02     !  2                            1  !
  2.47      .0000E+00    -.1983E+02     !  2                            1  !
  2.50      .0000E+00    -.1963E+02     !  2                            1  !

Axial Displacement of the Liner
 Radius    At 0.(Pt 1)   At 90.(Pt 2)    Minimum                  Maximum
                                          .3142E-07              .3763E-02
  2.25      .3743E-02     .3142E-07     !2                              1  !
  2.28      .3743E-02     .3142E-07     !2                              1  !
  2.31      .3744E-02     .3142E-07     !2                              1  !
  2.33      .3745E-02     .3144E-07     !2                              1  !
  2.36      .3747E-02     .3145E-07     !2                              1  !
  2.39      .3749E-02     .3147E-07     !2                              1  !
  2.42      .3752E-02     .3150E-07     !2                              1  !
  2.44      .3755E-02     .3152E-07     !2                              1  !
  2.47      .3759E-02     .3155E-07     !2                              1  !
  2.50      .3763E-02     .3159E-07     !2                                1 !
Time:  17: 5:10
Date:   1/26/89
```

```
*****************************************************************************************
*                                                                                       *
*      SSSSSSSS        HH        HH           AA           FFFFFFFFFFF   TTTTTTTTTTTTTT  *
*     SS     SSS      HH        HH          AAAA          FFFFFFFFFFF   TTTTTTTTTTTTTT  *
*    SS               HH        HH         AA  AA         FF                  TT        *
*     SSS             HHHHHHHHHHH         AA    AA        FF                  TT        *
*        SSS          HHHHHHHHHHH        AAAAAAAAAA       FFFFFF              TT        *
*           SSS       HH        HH       AAAAAAAAAAAA     FFFFFF              TT        *
*             SS      HH        HH      AA          AA    FF                  TT        *
*    SSS     SS       HH        HH     AA            AA   FF                  TT        *
*     SSSSSSSS        HH        HH     AA            AA   FF                  TT        *
*                                                                                       *
*****************************************************************************************
```

Analytical solutions for a lined circular hole

Code: SHAFT. Version 3.02, upgraded for SANDIA/NNWSI Jan 20, 1989
J.F.T. Agapito and Associates
Grand Junction (303) 242 4220

Shear deformation analysis for sec. 5.2 (unbonded)

Analysis completed by :jra
The QA version of this code is : SHAFT 3.02
Plane strain analysis

Slip allowed between liner and shaft wall

Geometry and Properties of Shaft and Liner

```
Radius of unlined hole....... =      2.5000
Lining thickness............. =       .2500
Elastic modulus of medium.... =    .1000E+05
Poissons ratio of medium..... =    .2000E+00
Elastic modulus of liner..... =    .3000E+05
Poissons ratio of liner...... =    .1500E+00
```

OUT-OF-PLANE SHEAR CALCULATION

```
The input shear strains are :
   eszx =     .1000E-02
   eszy =     .0000E+00
The input shear stresses are :
   SZX =     .4167E+01
   SZY =     .0000E+00

Angle from XX-stress direction =      .0
Radius    RZ-Stress    TZ-Stress    Axial Displ.
   2.250   .0000E+00    .0000E+00    .0000E+00
   2.500   .0000E+00    .0000E+00    .0000E+00
   2.505   .1662E-01    .0000E+00    .5000E-02
 100.000   .4164E+01    .0000E+00    .1001E+00
Angle from XX-stress direction =    45.0
Radius    RZ-Stress    TZ-Stress    Axial Displ.
   2.250   .0000E+00    .0000E+00    .0000E+00
   2.500   .0000E+00    .0000E+00    .0000E+00
   2.505   .1175E-01   -.5881E+01    .3536E-02
 100.000   .2944E+01   -.2948E+01    .7076E-01
Angle from XX-stress direction =    90.0
Radius    RZ-Stress    TZ-Stress    Axial Displ.
   2.250   .0000E+00    .0000E+00    .0000E+00
   2.500   .0000E+00    .0000E+00    .0000E+00
   2.505   .1395E-06   -.8317E+01    .4197E-07
 100.000   .3495E-04   -.4169E+01    .8399E-06

RZ-Shear Stresses across the Liner
 Radius     At 0.(Pt 1)    At 90.(Pt 2)     Minimum                Maximum
                                            .0000E+00            .0000E+00
   2.25       .0000E+00      .0000E+00     !                +                !
   2.28       .0000E+00      .0000E+00     !                +                !
   2.31       .0000E+00      .0000E+00     !                +                !
   2.33       .0000E+00      .0000E+00     !                +                !
   2.36       .0000E+00      .0000E+00     !                +                !
   2.39       .0000E+00      .0000E+00     !                +                !
   2.42       .0000E+00      .0000E+00     !                +                !
```

2.44	.0000E+00	.0000E+00	! +	!
2.47	.0000E+00	.0000E+00	! +	!
2.50	.0000E+00	.0000E+00	! +	!

TZ-Shear Stresses across the Liner

Radius	At 0.(Pt 1)	At 90.(Pt 2)	Minimum .0000E+00	Maximum .0000E+00
2.25	.0000E+00	.0000E+00	! +	!
2.28	.0000E+00	.0000E+00	! +	!
2.31	.0000E+00	.0000E+00	! +	!
2.33	.0000E+00	.0000E+00	! +	!
2.36	.0000E+00	.0000E+00	! +	!
2.39	.0000E+00	.0000E+00	! +	!
2.42	.0000E+00	.0000E+00	! +	!
2.44	.0000E+00	.0000E+00	! +	!
2.47	.0000E+00	.0000E+00	! +	!
2.50	.0000E+00	.0000E+00	! +	!

Axial Displacement of the Liner

Radius	At 0.(Pt 1)	At 90.(Pt 2)	Minimum .0000E+00	Maximum .0000E+00
2.25	.0000E+00	.0000E+00	! +	!
2.28	.0000E+00	.0000E+00	! +	!
2.31	.0000E+00	.0000E+00	! +	!
2.33	.0000E+00	.0000E+00	! +	!
2.36	.0000E+00	.0000E+00	! +	!
2.39	.0000E+00	.0000E+00	! +	!
2.42	.0000E+00	.0000E+00	! +	!
2.44	.0000E+00	.0000E+00	! +	!
2.47	.0000E+00	.0000E+00	! +	!
2.50	.0000E+00	.0000E+00	! +	!

Time: 17: 9:45
Date: 1/26/89

```
*****************************************************************************************
*                                                                                       *
*      SSSSSSSS        HH        HH            AA            FFFFFFFFFFF   TTTTTTTTTTTTTT  *
*     SS     SSS      HH        HH           AAAA           FFFFFFFFFFF   TTTTTTTTTTTTTT  *
*    SS               HH        HH          AA  AA          FF                  TT        *
*     SSS             HHHHHHHHHHHH         AA    AA         FF                  TT        *
*        SSS          HHHHHHHHHHHH        AAAAAAAAAA        FFFFFF              TT        *
*           SSS       HH        HH       AAAAAAAAAAAA       FFFFFF              TT        *
*             SS      HH        HH      AA          AA      FF                  TT        *
*    SSS     SS       HH        HH     AA            AA     FF                  TT        *
*     SSSSSSSS        HH        HH     AA            AA     FF                  TT        *
*                                                                                       *
*****************************************************************************************
```

Analytical solutions for a lined circular hole

Code: SHAFT. Version 3.02, upgraded for SANDIA/NNWSI Jan 20, 1989
J.F.T. Agapito and Associates
Grand Junction (303) 242 4220

Unlined shaft analysis for sec. 5.3 (hoop deformation)

Analysis completed by :jra
The QA version of this code is : SHAFT 3.02
Plane strain analysis

Bonding between shaft wall and liner is assumed

Geometry and Properties of Shaft and Liner

Radius of unlined hole..... = 2.5000
Lining thickness..... = .2500
Elastic modulus of medium.... = .1000E+05
Poissons ratio of medium..... = .2000E+00
Elastic modulus of liner..... = .1000E+05
Poissons ratio of liner..... = .2000E+00

HOOP AND AXIAL DEFORMATION CALCULATION

The input in-plane stresses are :
SX = .1000E+02
SY = .5000E+01
SXY = .2500E+01
The axial strain (ESZ) is : .1000E-02

The principal stresses are :
SIG1 = .1104E+02
SIG3 = .3964E+01
The major stress is inclined at 22.5 degrees relative to the X axis

The Interaction Calculation Predicts

Angle from XX stress direction = .0

Radius	RR-Stress	TT-Stress	RT-Stress	ZZ-Stress	Radial Displ.	Hoop Displ.
2.250	.0000E+00	.5000E+01	.0000E+00	.1100E+02	.4950E-02	.2160E-02
2.500	.7457E+00	.6154E+01	.1629E+01	.1138E+02	.4874E-02	.1971E-02
2.505	.7631E+00	.6169E+01	.1652E+01	.1139E+02	.4873E-02	.1968E-02
5.000	.6764E+01	.6211E+01	.3205E+01	.1260E+02	.5022E-02	.1926E-02
10.000	.9133E+01	.5360E+01	.2734E+01	.1290E+02	.7334E-02	.3190E-02
100.000	.9991E+01	.5004E+01	.2503E+01	.1300E+02	.6409E-01	.3002E-01

Angle from XX stress direction = 90.0

Radius	RR-Stress	TT-Stress	RT-Stress	ZZ-Stress	Radial Displ.	Hoop Displ.
2.250	.0000E+00	.2500E+02	.0000E+00	.1500E+02	.6300E-03	-.2160E-02
2.500	.2104E+01	.2100E+02	-.1629E+01	.1462E+02	.4706E-03	-.1971E-02
2.505	.2135E+01	.2093E+02	-.1652E+01	.1461E+02	.4681E-03	-.1968E-02
5.000	.5199E+01	.1183E+02	-.3205E+01	.1340E+02	.2008E-03	-.1926E-02
10.000	.5107E+01	.1040E+02	-.2734E+01	.1310E+02	.3774E-03	-.3190E-02
100.000	.5001E+01	.1000E+02	-.2503E+01	.1300E+02	.3997E-02	-.3002E-01

The Interaction Calculation for the liner
predicts the stresses listed below.
Note that the reference angle is the
first principal stress direction

Hoop Stresses in the Liner

Radius	At 0.(Pt 1)	At 90.(Pt 2)	Minimum .8579E+00	Maximum .2914E+02
2.25	.8579E+00	.2914E+02		
2.28	.1184E+01	.2845E+02		
2.31	.1487E+01	.2780E+02		
2.33	.1768E+01	.2718E+02		
2.36	.2029E+01	.2659E+02		
2.39	.2271E+01	.2604E+02		
2.42	.2496E+01	.2551E+02		
2.44	.2705E+01	.2500E+02		
2.47	.2900E+01	.2452E+02		
2.50	.3080E+01	.2407E+02		

Radial Stresses in the Liner

Radius	At 0.(Pt 1)	At 90.(Pt 2)	Minimum .0000E+00	Maximum .2386E+01
2.25	.0000E+00	.0000E+00		
2.28	.1663E-01	.3470E+00		
2.31	.4447E-01	.6697E+00		
2.33	.8229E-01	.9700E+00		
2.36	.1290E+00	.1250E+01		
2.39	.1836E+00	.1510E+01		
2.42	.2452E+00	.1752E+01		
2.44	.3130E+00	.1978E+01		
2.47	.3863E+00	.2189E+01		
2.50	.4644E+00	.2386E+01		

Axial Stresses in the Liner

Radius	At 0.(Pt 1)	At 90.(Pt 2)	Minimum .1017E+02	Maximum .1583E+02
2.25	.1017E+02	.1583E+02		
2.28	.1024E+02	.1576E+02		
2.31	.1031E+02	.1569E+02		
2.33	.1037E+02	.1563E+02		
2.36	.1043E+02	.1557E+02		
2.39	.1049E+02	.1551E+02		
2.42	.1055E+02	.1545E+02		
2.44	.1060E+02	.1540E+02		
2.47	.1066E+02	.1534E+02		
2.50	.1071E+02	.1529E+02		

Radial Displacements in the Liner

Radius	At 0.(Pt 1)	At 90.(Pt 2)	Minimum -.4415E-03	Maximum .5845E-02
2.25	.5845E-02	-.2647E-03		
2.28	.5838E-02	-.2890E-03		
2.31	.5832E-02	-.3119E-03		
2.33	.5826E-02	-.3336E-03		
2.36	.5819E-02	-.3541E-03		
2.39	.5813E-02	-.3735E-03		
2.42	.5806E-02	-.3919E-03		
2.44	.5799E-02	-.4093E-03		
2.47	.5793E-02	-.4258E-03		
2.50	.5786E-02	-.4415E-03		

Hoop Displacements in the Liner

Radius	At 0.(Pt 1)	At 90.(Pt 2)	Minimum -.5144E-07	Maximum .0000E+00
2.25	.0000E+00	-.5144E-07		
2.28	.0000E+00	-.5082E-07		
2.31	.0000E+00	-.5024E-07		
2.33	.0000E+00	-.4969E-07		
2.36	.0000E+00	-.4916E-07		
2.39	.0000E+00	-.4867E-07		
2.42	.0000E+00	-.4820E-07		
2.44	.0000E+00	-.4776E-07		
2.47	.0000E+00	-.4734E-07		
2.50	.0000E+00	-.4694E-07		

Time: 17:26:26
Date: 1/26/89

```
*****************************************************************************
*                                                                           *
*      SSSSSSSS        HH        HH            AA            FFFFFFFFFFFF   TTTTTTTTTTTTTTT  *
*     SS      SSS      HH        HH           AAAA           FFFFFFFFFFFF   TTTTTTTTTTTTTTT  *
*    SS                HH        HH          AA  AA          FF                   TT        *
*     SSS              HHHHHHHHHHHH         AA    AA         FF                   TT        *
*        SSS           HHHHHHHHHHHH        AAAAAAAAAA        FFFFFF               TT        *
*           SSS        HH        HH       AAAAAAAAAAAA       FFFFFF               TT        *
*             SS       HH        HH      AA          AA      FF                   TT        *
*    SSS      SS       HH        HH     AA            AA     FF                   TT        *
*     SSSSSSSS         HH        HH     AA            AA     FF                   TT        *
*                                                                           *
*****************************************************************************
```

Analytical solutions for a lined circular hole

Code: SHAFT. Version 3.02, upgraded for SANDIA/NNWSI Jan 20, 1989
J.F.T. Agapito and Associates
Grand Junction (303) 242 4220

Unlined shaft analysis for sec. 5.3 (shear deformation)

Analysis completed by :ira
The QA version of this code is : SHAFT 3.02
Plane strain analysis

Bonding between shaft wall and liner is assumed

Geometry and Properties of Shaft and Liner

Radius of unlined hole..... = 2.5000
Lining thickness..... = .2500
Elastic modulus of medium.... = .1000E+05
Poissons ratio of medium..... = .2000E+00
Elastic modulus of liner..... = .1000E+05
Poissons ratio of liner..... = .2000E+00

OUT-OF-PLANE SHEAR CALCULATION

The input shear strains are :
eszx = .1000E-02
eszy = .0000E+00
The input shear stresses are :
SZX = .4167E+01
SZY = .0000E+00

Angle from XX-stress direction = .0

Radius	RZ-Stress	TZ-Stress	Axial Displ.
2.250	.0000E+00	.0000E+00	.4500E-02
2.500	.7917E+00	.0000E+00	.4525E-02
2.505	.8051E+00	.0000E+00	.4526E-02
5.000	.3323E+01	.0000E+00	.6013E-02
10.000	.3956E+01	.0000E+00	.1051E-01
100.000	.4165E+01	.0000E+00	.1001E+00

Angle from XX-stress direction = 90.0

Radius	RZ-Stress	TZ-Stress	Axial Displ.
2.250	.0000E+00	-.9333E+01	.3777E-07
2.500	.6645E-05	-.7542E+01	.3798E-07
2.505	.6758E-05	-.7528E+01	.3799E-07
5.000	.2789E-04	-.5010E+01	.5047E-07
10.000	.3320E-04	-.4378E+01	.8819E-07
100.000	.3496E-04	-.4169E+01	.8398E-06

RZ-Shear Stresses across the Liner

Radius	At 0.(Pt 1)	At 90.(Pt 2)	Minimum .0000E+00	Maximum .7917E+00
2.25	.0000E+00	.0000E+00	1+	
2.28	.1010E+00	.8479E-06	12 1	
2.31	.1984E+00	.1665E-05	12 1	
2.34	.2923E+00	.2454E-05	12 1	
2.37	.3829E+00	.3214E-05	12 1	
2.40	.4704E+00	.3949E-05	12 1	
2.43	.5543E+00	.4655E-05	12 1	
2.46	.6345E+00	.5334E-05	12 1	
2.49	.7104E+00	.5985E-05	12 1	
2.52	.7817E+00	.6604E-05	12 1	

TZ-Shear Stresses across the Liner

Radius	At 0.(Pt 1)	At 90.(Pt 2)	Minimum	Maximum
			-.8333E+01	.0000E+00
2.25	.0000E+00	-.8333E+01	!2	1 !
2.28	.0000E+00	-.8232E+01	!2	1 !
2.31	.0000E+00	-.8135E+01	!2	1 !
2.33	.0000E+00	-.8041E+01	! 2	1 !
2.36	.0000E+00	-.7950E+01	! 2	1 !
2.39	.0000E+00	-.7863E+01	! 2	1 !
2.42	.0000E+00	-.7778E+01	! 2	1 !
2.44	.0000E+00	-.7697E+01	! 2	1 !
2.47	.0000E+00	-.7618E+01	! 2	1 !
2.50	.0000E+00	-.7542E+01	! 2	1 !

Axial Displacement of the Liner

Radius	At 0.(Pt 1)	At 90.(Pt 2)	Minimum	Maximum
			.3777E-07	.4525E-02
2.25	.4500E-02	.3777E-07	!2	1 !
2.28	.4500E-02	.3778E-07	!2	1 !
2.31	.4501E-02	.3778E-07	!2	1 !
2.33	.4503E-02	.3780E-07	!2	1 !
2.36	.4505E-02	.3782E-07	!2	1 !
2.39	.4508E-02	.3784E-07	!2	1 !
2.42	.4511E-02	.3787E-07	!2	1 !
2.44	.4515E-02	.3790E-07	!2	1 !
2.47	.4520E-02	.3794E-07	!2	1 !
2.50	.4525E-02	.3798E-07	!2	1 !

Time: 17:21:43
Date: 1/26/89

```
*****************************************************************************************
*                                                                                       *
*      SSSSSSSS        HH        HH            AA            FFFFFFFFFFF   TTTTTTTTTTTTTT  *
*     SS     SSS      HH        HH           AAAA           FFFFFFFFFFF   TTTTTTTTTTTTTT  *
*    SS               HH        HH          AA  AA          FF                  TT        *
*     SSS             HHHHHHHHHHH          AA    AA         FF                  TT        *
*        SSS          HHHHHHHHHHH         AAAAAAAAAA        FFFFFF              TT        *
*           SSS       HH        HH       AAAAAAAAAAAA       FFFFFF              TT        *
*             SS      HH        HH      AA          AA      FF                  TT        *
*    SSS     SS       HH        HH     AA            AA     FF                  TT        *
*     SSSSSSSS        HH        HH     AA            AA     FF                  TT        *
*                                                                                       *
*****************************************************************************************
```

Analytical solutions for a lined circular hole

Code: SHAFT. Version 3.02, upgraded for SANDIA/NNWSI Jan 20, 1989
J.F.T. Agapito and Associates
Grand Junction (303) 242 4220

Hoop deformation analysis for sec. 5.4 (pure shear, bonded)

Analysis completed by :jra
The QA version of this code is : SHAFT 3.02
Plane strain analysis

Bonding between shaft wall and liner is assumed

Geometry and Properties of Shaft and Liner

Radius of unlined hole..... = 2.5000
Lining thickness..... = .2500
Elastic modulus of medium.... = .1000E+05
Poissons ratio of medium..... = .2000E+00
Elastic modulus of liner..... = .3000E+05
Poissons ratio of liner..... = .1500E+00

HOOP AND AXIAL DEFORMATION CALCULATION

The input in-plane stresses are :
SX = -.3500E+01
SY = .3500E+01
SXY = .0000E+00
The axial strain (ESZ) is : .0000E+00

The Interaction Calculation Predicts

Angle from XX stress direction = .0

Radius	RR-Stress	TT-Stress	RT-Stress	ZZ-Stress	Radial Displ.	Hoop Displ.
2.250	.0000E+00	.2932E+02	.0000E+00	.4397E+01	-.2783E-02	.0000E+00

Angle from XX stress direction = 22.5

Radius	RR-Stress	TT-Stress	RT-Stress	ZZ-Stress	Radial Displ.	Hoop Displ.
2.250	.0000E+00	.2073E+02	.0000E+00	.3109E+01	-.1968E-02	.1744E-02

Angle from XX stress direction = 45.0

Radius	RR-Stress	TT-Stress	RT-Stress	ZZ-Stress	Radial Displ.	Hoop Displ.
2.250	.0000E+00	.2461E-03	.0000E+00	.3691E-04	-.2336E-07	.2466E-02

Angle from XX stress direction = 67.5

Radius	RR-Stress	TT-Stress	RT-Stress	ZZ-Stress	Radial Displ.	Hoop Displ.
2.250	.0000E+00	-.2073E+02	.0000E+00	-.3109E+01	.1968E-02	.1744E-02

Angle from XX stress direction = 90.0

Radius	RR-Stress	TT-Stress	RT-Stress	ZZ-Stress	Radial Displ.	Hoop Displ.
2.250	.0000E+00	-.2932E+02	.0000E+00	-.4397E+01	.2783E-02	.4153E-07

The Interaction Calculation for the liner
predicts the stresses listed below.
Note that the reference angle is the
first principal stress direction

Hoop Stresses in the Liner

Radius	At 0.(Pt 1)	At 90.(Pt 2)	Minimum	Maximum
			-.2932E+02	.2932E+02
2.25	.2932E+02	-.2932E+02	!2	1 !
2.28	.2795E+02	-.2795E+02	!2	1 !
2.31	.2665E+02	-.2665E+02	! 2	1 !

```
 2.33      .2541E+02    -.2541E+02     ! 2                          1   !
 2.36      .2423E+02    -.2423E+02     !  2                        1    !
 2.39      .2311E+02    -.2311E+02     !   2                      1     !
 2.42      .2205E+02    -.2205E+02     !   2                      1     !
 2.44      .2103E+02    -.2103E+02     !    2                    1      !
 2.47      .2005E+02    -.2005E+02     !    2                    1      !
 2.50      .1912E+02    -.1912E+02     !     2                  1       !

Radial Stresses in the Liner
 Radius    At 0.(Pt 1)   At 90.(Pt 2)    Minimum                Maximum
                                         -.1874E+01            .1874E+01
 2.25      .0000E+00     .0000E+00      !                +                !
 2.28      .3405E+00    -.3405E+00      !            2     1              !
 2.31      .6407E+00    -.6407E+00      !          2         1            !
 2.33      .9041E+00    -.9041E+00      !        2             1          !
 2.36      .1134E+01    -.1134E+01      !     2                 1        !
 2.39      .1333E+01    -.1333E+01      !    2                   1       !
 2.42      .1505E+01    -.1505E+01      !  2                       1    !
 2.44      .1650E+01    -.1650E+01      ! 2                         1   !
 2.47      .1773E+01    -.1773E+01      !2                           1  !
 2.50      .1874E+01    -.1874E+01      !2                            1 !

Axial Stresses in the Liner
 Radius    At 0.(Pt 1)   At 90.(Pt 2)    Minimum                Maximum
                                         -.4397E+01            .4397E+01
 2.25      .4397E+01    -.4397E+01      !2                           1  !
 2.28      .4243E+01    -.4243E+01      !2                           1  !
 2.31      .4093E+01    -.4093E+01      ! 2                         1   !
 2.33      .3947E+01    -.3947E+01      ! 2                         1   !
 2.36      .3805E+01    -.3805E+01      ! 2                         1   !
 2.39      .3667E+01    -.3667E+01      !  2                       1    !
 2.42      .3533E+01    -.3533E+01      !  2                       1    !
 2.44      .3402E+01    -.3402E+01      !   2                     1     !
 2.47      .3274E+01    -.3274E+01      !   2                     1     !
 2.50      .3149E+01    -.3149E+01      !    2                   1      !

Radial Displacements in the Liner
 Radius    At 0.(Pt 1)   At 90.(Pt 2)    Minimum                Maximum
                                         -.2808E-02            .2808E-02
 2.25     -.2783E-02     .2783E-02      !1                           2  !
 2.28     -.2787E-02     .2787E-02      !1                           2  !
 2.31     -.2791E-02     .2791E-02      !1                           2  !
 2.33     -.2795E-02     .2795E-02      !1                           2  !
 2.36     -.2798E-02     .2798E-02      !1                           2  !
 2.39     -.2801E-02     .2801E-02      !1                           2  !
 2.42     -.2803E-02     .2803E-02      !1                           2  !
 2.44     -.2805E-02     .2805E-02      !1                           2  !
 2.47     -.2807E-02     .2807E-02      !1                           2  !
 2.50     -.2808E-02     .2808E-02      !1                            2 !

Hoop Displacements in the Liner
 Radius    At 0.(Pt 1)   At 90.(Pt 2)    Minimum                Maximum
                                          .0000E+00            .4153E-07
 2.25      .0000E+00     .4153E-07      !1                            2 !
 2.28      .0000E+00     .4090E-07      !1                           2  !
 2.31      .0000E+00     .4029E-07      !1                           2  !
 2.33      .0000E+00     .3970E-07      !1                          2   !
 2.36      .0000E+00     .3913E-07      !1                          2   !
 2.39      .0000E+00     .3858E-07      !1                         2    !
 2.42      .0000E+00     .3804E-07      !1                         2    !
 2.44      .0000E+00     .3752E-07      !1                         2    !
 2.47      .0000E+00     .3702E-07      !1                        2     !
 2.50      .0000E+00     .3653E-07      !1                        2     !
Time:  12: 2:12
Date:   1/30/89
```

```
*****************************************************************************************
*                                                                                       *
*      SSSSSSSS        HH        HH           AA           FFFFFFFFFFF   TTTTTTTTTTTTTT  *
*     SS      SSS      HH        HH          AAAA          FFFFFFFFFFF   TTTTTTTTTTTTTT  *
*    SS                HH        HH         AA  AA         FF                   TT       *
*     SSS              HHHHHHHHHHH         AA    AA        FF                   TT       *
*        SSS           HHHHHHHHHHH        AAAAAAAAAA       FFFFFF               TT       *
*           SSS        HH        HH      AAAAAAAAAAAA      FFFFFF               TT       *
*             SS       HH        HH     AA          AA     FF                   TT       *
*    SSS      SS       HH        HH    AA            AA    FF                   TT       *
*     SSSSSSSS         HH        HH    AA            AA    FF                   TT       *
*                                                                                       *
*****************************************************************************************
```

Analytical solutions for a lined circular hole

Code: SHAFT. Version 3.02, upgraded for SANDIA/NNWSI Jan 20, 1989
J.F.T. Agapito and Associates
Grand Junction (303) 242 4220

Hoop deformation analysis for sec. 5.4 (pure shear, unbonded)

Analysis completed by :jra
The QA version of this code is : SHAFT 3.02
Plane strain analysis

Slip allowed between liner and shaft wall

Geometry and Properties of Shaft and Liner

```
Radius of unlined hole....... =      2.5000
Lining thickness............. =       .2500
Elastic modulus of medium.... =   .1000E+05
Poissons ratio of medium..... =   .2000E+00
Elastic modulus of liner..... =   .3000E+05
Poissons ratio of liner...... =   .1500E+00
```

HOOP AND AXIAL DEFORMATION CALCULATION

```
The input in-plane stresses are :
   SX =    -.3500E+01
   SY =     .3500E+01
   SXY =     .0000E+00
The axial strain (ESZ) is :      .0000E+00
```

The Interaction Calculation Predicts

```
Angle from XX stress direction =      .0
Radius    RR-Stress    TT-Stress    RT-Stress    ZZ-Stress    Radial Displ.   Hoop Displ.
   2.250   .0000E+00    .7149E+01    .0000E+00    .1072E+01   -.3347E-02    .0000E+00
Angle from XX stress direction =   22.5
Radius    RR-Stress    TT-Stress    RT-Stress    ZZ-Stress    Radial Displ.   Hoop Displ.
   2.250   .0000E+00    .5055E+01    .0000E+00    .7583E+00   -.2367E-02    .1369E-02
Angle from XX stress direction =   45.0
Radius    RR-Stress    TT-Stress    RT-Stress    ZZ-Stress    Radial Displ.   Hoop Displ.
   2.250   .0000E+00    .6001E-04    .0000E+00    .9002E-05   -.2810E-07    .1936E-02
Angle from XX stress direction =   67.5
Radius    RR-Stress    TT-Stress    RT-Stress    ZZ-Stress    Radial Displ.   Hoop Displ.
   2.250   .0000E+00   -.5055E+01    .0000E+00   -.7583E+00    .2367E-02    .1369E-02
Angle from XX stress direction =   90.0
Radius    RR-Stress    TT-Stress    RT-Stress    ZZ-Stress    Radial Displ.   Hoop Displ.
   2.250   .0000E+00   -.7149E+01    .0000E+00   -.1072E+01    .3347E-02    .3260E-07
```

The Interaction Calculation for the liner
predicts the stresses listed below.
Note that the reference angle is the
first principal stress direction

```
Hoop Stresses in the Liner
 Radius    At 0.(Pt 1)    At 90.(Pt 2)     Minimum                    Maximum
                                          -.7149E+01                 .7149E+01
  2.25       .7149E+01     -.7149E+01     !2                                1  !
  2.28       .5484E+01     -.5484E+01     !   2                         1      !
  2.31       .3865E+01     -.3865E+01     !      2                   1         !
```

```
  2.33      .2290E+01    -.2290E+01     !          2          1            !
  2.36      .7543E+00    -.7543E+00     !             2   1               !
  2.39     -.7448E+00     .7448E+00     !             1   2               !
  2.42     -.2210E+01     .2210E+01     !           1        2             !
  2.44     -.3646E+01     .3646E+01     !        1              2          !
  2.47     -.5053E+01     .5053E+01     !    1                     2       !
  2.50     -.6435E+01     .6435E+01     ! 1                          2    !
```

Radial Stresses in the Liner

```
 Radius    At 0.(Pt 1)   At 90.(Pt 2)    Minimum                Maximum
                                         -.1613E+00            .1613E+00
  2.25      .0000E+00     .0000E+00     !               +                !
  2.28      .7502E-01    -.7502E-01     !        2              1        !
  2.31      .1253E+00    -.1253E+00     !   2                     1      !
  2.33      .1533E+00    -.1533E+00     !2                            1  !
  2.36      .1613E+00    -.1613E+00     !2                            1  !
  2.39      .1512E+00    -.1512E+00     !2                            1  !
  2.42      .1249E+00    -.1249E+00     !   2                     1      !
  2.44      .8398E-01    -.8398E-01     !      2                1        !
  2.47      .3002E-01    -.3002E-01     !            2     1             !
  2.50     -.3565E-01     .3565E-01     !            1     2             !
```

Axial Stresses in the Liner

```
 Radius    At 0.(Pt 1)   At 90.(Pt 2)    Minimum                Maximum
                                         -.1072E+01            .1072E+01
  2.25      .1072E+01    -.1072E+01     !2                            1 !
  2.28      .8338E+00    -.8338E+00     !   2                     1      !
  2.31      .5985E+00    -.5985E+00     !      2                1        !
  2.33      .3665E+00    -.3665E+00     !        2          1            !
  2.36      .1373E+00    -.1373E+00     !             2   1               !
  2.39     -.8904E-01     .8904E-01     !               1 2               !
  2.42     -.3128E+00     .3128E+00     !           1        2             !
  2.44     -.5342E+00     .5342E+00     !        1              2          !
  2.47     -.7534E+00     .7534E+00     !    1                     2       !
  2.50     -.9705E+00     .9705E+00     ! 1                          2    !
```

Radial Displacements in the Liner

```
 Radius    At 0.(Pt 1)   At 90.(Pt 2)    Minimum                Maximum
                                         -.3349E-02            .3349E-02
  2.25     -.3347E-02     .3347E-02     !1                            2  !
  2.28     -.3348E-02     .3348E-02     !1                            2  !
  2.31     -.3349E-02     .3349E-02     !1                            2  !
  2.33     -.3349E-02     .3349E-02     !1                            2  !
  2.36     -.3349E-02     .3349E-02     !1                             2 !
  2.39     -.3349E-02     .3349E-02     !1                            2  !
  2.42     -.3349E-02     .3349E-02     !1                            2  !
  2.44     -.3348E-02     .3348E-02     !1                            2  !
  2.47     -.3347E-02     .3347E-02     !1                            2  !
  2.50     -.3346E-02     .3346E-02     !1                            2  !
```

Hoop Displacements in the Liner

```
 Radius    At 0.(Pt 1)   At 90.(Pt 2)    Minimum                Maximum
                                          .0000E+00            .3260E-07
  2.25      .0000E+00     .3260E-07     !1                             2 !
  2.28      .0000E+00     .3161E-07     !1                            2  !
  2.31      .0000E+00     .3063E-07     !1                           2   !
  2.33      .0000E+00     .2965E-07     !1                          2    !
  2.36      .0000E+00     .2867E-07     !1                         2     !
  2.39      .0000E+00     .2769E-07     !1                        2      !
  2.42      .0000E+00     .2672E-07     !1                       2       !
  2.44      .0000E+00     .2574E-07     !1                      2        !
  2.47      .0000E+00     .2475E-07     !1                      2        !
  2.50      .0000E+00     .2377E-07     !1                     2         !
Time:  12: 5:26
Date:   1/30/89
```

```
*****************************************************************************************
*                                                                                       *
*      SSSSSSSS        HH       HH           AA           FFFFFFFFFFF   TTTTTTTTTTTTTT  *
*     SS     SSS      HH       HH          AAAA          FFFFFFFFFFF   TTTTTTTTTTTTTT  *
*    SS               HH       HH         AA  AA         FF                  TT        *
*     SSS             HHHHHHHHHHH        AA    AA        FF                  TT        *
*        SSS          HHHHHHHHHHH       AAAAAAAAAA       FFFFFF              TT        *
*           SSS       HH       HH      AAAAAAAAAAAA      FFFFFF              TT        *
*             SS      HH       HH     AA          AA     FF                  TT        *
*    SSS     SS       HH       HH    AA            AA    FF                  TT        *
*     SSSSSSSS        HH       HH    AA            AA    FF                  TT        *
*                                                                                       *
*****************************************************************************************
```

Analytical solutions for a lined circular hole

Code: SHAFT. Version 3.02, upgraded for SANDIA/NNWSI Jan 20, 1989
J.F.T. Agapito and Associates
Grand Junction (303) 242 4220

Hoop deformation analysis for sec. 5.4 (isotropic, bonded)

Analysis completed by :jra
The QA version of this code is : SHAFT 3.02
Plane strain analysis

Bonding between shaft wall and liner is assumed

Geometry and Properties of Shaft and Liner

```
Radius of unlined hole....... =      2.5000
Lining thickness............. =       .2500
Elastic modulus of medium.... =   .1000E+05
Poissons ratio of medium..... =   .2000E+00
Elastic modulus of liner..... =   .3000E+05
Poissons ratio of liner...... =   .1500E+00
```

HOOP AND AXIAL DEFORMATION CALCULATION

```
The input in-plane stresses are :
   SX =     .7500E+01
   SY =     .7500E+01
   SXY =     .0000E+00
The axial strain (ESZ) is :     .0000E+00
```

The Interaction Calculation for the liner
predicts the stresses listed below.
Note that the reference angle is the
first principal stress direction

Hoop Stresses in the Liner

Radius	At 0.(Pt 1)	At 90.(Pt 2)	Minimum .3230E+02	Maximum .3570E+02
2.25	.3570E+02	.3570E+02		
2.28	.3526E+02	.3526E+02		
2.31	.3485E+02	.3485E+02		
2.33	.3444E+02	.3444E+02		
2.36	.3405E+02	.3405E+02		
2.39	.3368E+02	.3368E+02		
2.42	.3332E+02	.3332E+02		
2.44	.3297E+02	.3297E+02		
2.47	.3263E+02	.3263E+02		
2.50	.3230E+02	.3230E+02		

Radial Stresses in the Liner

Radius	At 0.(Pt 1)	At 90.(Pt 2)	Minimum .0000E+00	Maximum .3391E+01
2.25	.0000E+00	.0000E+00		
2.28	.4327E+00	.4327E+00		
2.31	.8498E+00	.8498E+00		
2.33	.1252E+01	.1252E+01		
2.36	.1640E+01	.1640E+01		
2.39	.2015E+01	.2015E+01		
2.42	.2377E+01	.2377E+01		

2.44	.2726E+01	.2726E+01	! + !
2.47	.3064E+01	.3064E+01	! + !
2.50	.3391E+01	.3391E+01	! + !

Axial Stresses in the Liner

Radius	At 0.(Pt 1)	At 90.(Pt 2)	Minimum .5354E+01	Maximum .5354E+01
2.25	.5354E+01	.5354E+01	! + !	
2.28	.5354E+01	.5354E+01	! + !	
2.31	.5354E+01	.5354E+01	! + !	
2.33	.5354E+01	.5354E+01	!+ !	
2.36	.5354E+01	.5354E+01	! + !	
2.39	.5354E+01	.5354E+01	!+ !	
2.42	.5354E+01	.5354E+01	!+ !	
2.44	.5354E+01	.5354E+01	! + !	
2.47	.5354E+01	.5354E+01	!+ !	
2.50	.5354E+01	.5354E+01	! + !	

Radial Displacements in the Liner

Radius	At 0.(Pt 1)	At 90.(Pt 2)	Minimum .2583E-02	Maximum .2617E-02
2.25	.2617E-02	.2617E-02	! + !	
2.28	.2611E-02	.2611E-02	! + !	
2.31	.2606E-02	.2606E-02	! + !	
2.33	.2602E-02	.2602E-02	! + !	
2.36	.2598E-02	.2598E-02	! + !	
2.39	.2594E-02	.2594E-02	! + !	
2.42	.2591E-02	.2591E-02	! + !	
2.44	.2588E-02	.2588E-02	! + !	
2.47	.2585E-02	.2585E-02	! + !	
2.50	.2583E-02	.2583E-02	!+ !	

Hoop Displacements in the Liner

Radius	At 0.(Pt 1)	At 90.(Pt 2)	Minimum .0000E+00	Maximum .0000E+00
2.25	.0000E+00	.0000E+00	! + !	
2.28	.0000E+00	.0000E+00	! + !	
2.31	.0000E+00	.0000E+00	! + !	
2.33	.0000E+00	.0000E+00	! + !	
2.36	.0000E+00	.0000E+00	! + !	
2.39	.0000E+00	.0000E+00	! + !	
2.42	.0000E+00	.0000E+00	! + !	
2.44	.0000E+00	.0000E+00	! + !	
2.47	.0000E+00	.0000E+00	! + !	
2.50	.0000E+00	.0000E+00	! + !	

Time: 12:13:34
Date: 1/30/89

APPENDIX B

COMPARISON WITH FINITE-ELEMENT CODES

```
*****************************************************************************************
*                                                                                       *
*      SSSSSSSS        HH       HH           AA           FFFFFFFFFFF   TTTTTTTTTTTTTT  *
*     SS     SSS       HH       HH          AAAA          FFFFFFFFFFF   TTTTTTTTTTTTTT  *
*    SS                HH       HH         AA  AA         FF                  TT        *
*     SSS              HHHHHHHHHHH        AA    AA        FF                  TT        *
*        SSS           HHHHHHHHHHH       AAAAAAAAAA       FFFFFF              TT        *
*           SSS        HH       HH      AAAAAAAAAAAA      FFFFFF              TT        *
*             SS       HH       HH     AA          AA     FF                  TT        *
*    SSS     SS        HH       HH    AA            AA    FF                  TT        *
*     SSSSSSSS         HH       HH    AA            AA    FF                  TT        *
*                                                                                       *
*****************************************************************************************
```

Analytical solutions for a lined circular hole

Code: SHAFT. Version 3.02, upgraded for SANDIA/NNWSI Jan 20, 1989
J.F.T. Agapito and Associates
Grand Junction (303) 242 4220

Analysis for comparison to VISCOT F.E. code, sec. 5.5.1

Analysis completed by :jra
The QA version of this code is : SHAFT 3.02
Plane strain analysis

Bonding between shaft wall and liner is assumed

Geometry and Properties of Shaft and Liner

```
Radius of unlined hole....... =      2.1300
Lining thickness............. =       .3000
Elastic modulus of medium.... =   .1520E+05
Poissons ratio of medium..... =   .2200E+00
Elastic modulus of liner..... =   .2800E+05
Poissons ratio of liner...... =   .1500E+00
```

HOOP AND AXIAL DEFORMATION CALCULATION

```
The input in-plane stresses are :
   SX =     .7530E+01
   SY =     .2830E+01
   SXY =     .0000E+00
The axial strain (ESZ) is :     .0000E+00
```

The Interaction Calculation Predicts

```
Angle from XX stress direction =     .0
Radius   RR-Stress   TT-Stress   RT-Stress   ZZ-Stress   Radial Displ.  Hoop Displ.
  15.000   .7351E+01   .2891E+01   .0000E+00   .2253E+01   .6507E-02   .0000E+00
Angle from XX stress direction =   90.0
Radius   RR-Stress   TT-Stress   RT-Stress   ZZ-Stress   Radial Displ.  Hoop Displ.
  15.000   .2886E+01   .7593E+01  -.4056E-04   .2305E+01   .6265E-03  -.4833E-07
```

The Interaction Calculation for the liner
predicts the stresses listed below.
Note that the reference angle is the
first principal stress direction

Hoop Stresses in the Liner

Radius	At 0.(Pt 1)	At 90.(Pt 2)	Minimum .2183E+01	Maximum .3021E+02
1.83	.2183E+01	.3021E+02		
1.86	.2743E+01	.2908E+02		
1.90	.3251E+01	.2803E+02		
1.93	.3714E+01	.2705E+02		
1.96	.4137E+01	.2613E+02		
2.00	.4524E+01	.2528E+02		
2.03	.4878E+01	.2448E+02		
2.06	.5204E+01	.2374E+02		
2.10	.5504E+01	.2303E+02		
2.13	.5782E+01	.2237E+02		

Radial Stresses in the Liner

Radius	At 0.(Pt 1)	At 90.(Pt 2)	Minimum .0000E+00	Maximum .3180E+01
1.83	.0000E+00	.0000E+00		
1.86	.5292E-01	.5214E+00		
1.90	.1293E+00	.9893E+00		
1.93	.2254E+00	.1410E+01		
1.96	.3380E+00	.1787E+01		
2.00	.4642E+00	.2127E+01		
2.03	.6015E+00	.2433E+01		
2.06	.7481E+00	.2708E+01		
2.10	.9019E+00	.2956E+01		
2.13	.1062E+01	.3180E+01		

Axial Stresses in the Liner

Radius	At 0.(Pt 1)	At 90.(Pt 2)	Minimum .3274E+00	Maximum .4532E+01
1.83	.3274E+00	.4532E+01		
1.86	.4193E+00	.4440E+01		
1.90	.5071E+00	.4352E+01		
1.93	.5910E+00	.4268E+01		
1.96	.6713E+00	.4188E+01		
2.00	.7482E+00	.4111E+01		
2.03	.8219E+00	.4037E+01		
2.06	.8928E+00	.3967E+01		
2.10	.9609E+00	.3898E+01		
2.13	.1027E+01	.3833E+01		

Radial Displacements in the Liner

Radius	At 0.(Pt 1)	At 90.(Pt 2)	Minimum -.2606E-04	Maximum .2067E-02
1.83	.2067E-02	.2546E-05		
1.86	.2067E-02	-.3232E-05		
1.90	.2066E-02	-.8210E-05		
1.93	.2066E-02	-.1246E-04		
1.96	.2065E-02	-.1606E-04		
2.00	.2065E-02	-.1906E-04		
2.03	.2064E-02	-.2151E-04		
2.06	.2064E-02	-.2346E-04		
2.10	.2064E-02	-.2497E-04		
2.13	.2064E-02	-.2606E-04		

Hoop Displacements in the Liner

Radius	At 0.(Pt 1)	At 90.(Pt 2)	Minimum -.1623E-07	Maximum .0000E+00
1.83	.0000E+00	-.1623E-07		
1.86	.0000E+00	-.1590E-07		
1.90	.0000E+00	-.1560E-07		
1.93	.0000E+00	-.1531E-07		
1.96	.0000E+00	-.1504E-07		
2.00	.0000E+00	-.1478E-07		
2.03	.0000E+00	-.1453E-07		
2.06	.0000E+00	-.1430E-07		
2.10	.0000E+00	-.1408E-07		
2.13	.0000E+00	-.1388E-07		

Time: 14:41:55
Date: 1/27/89

```
*****************************************************************************************
*                                                                                       *
*      SSSSSSSS        HH       HH          AA          FFFFFFFFFFF   TTTTTTTTTTTTTT   *
*     SS     SSS      HH       HH         AAAA         FFFFFFFFFFF   TTTTTTTTTTTTTT   *
*    SS               HH       HH        AA  AA        FF                  TT         *
*     SSS             HHHHHHHHHHH       AA    AA       FF                  TT         *
*        SSS          HHHHHHHHHHH      AAAAAAAAAA      FFFFFF              TT         *
*           SSS       HH       HH     AAAAAAAAAAAA     FFFFFF              TT         *
*             SS      HH       HH    AA          AA    FF                  TT         *
*    SSS     SS       HH       HH   AA            AA   FF                  TT         *
*     SSSSSSSS        HH       HH   AA            AA   FF                  TT         *
*                                                                                       *
*****************************************************************************************
```

Analytical solutions for a lined circular hole

Code: SHAFT. Version 3.02, upgraded for SANDIA/NNWSI Jan 20, 1989
J.F.T. Agapito and Associates
Grand Junction (303) 242 4220

Analysis for comparison with VISCOT F. E. code, sec. 5.5.1

Analysis completed by :jra
The QA version of this code is : SHAFT 3.02
Plane strain analysis

Bonding between shaft wall and liner is assumed

Geometry and Properties of Shaft and Liner

```
Radius of unlined hole....... =      2.1300
Lining thickness............. =       .3000
Elastic modulus of medium.... =   .1520E+05
Poissons ratio of medium..... =   .2200E+00
Elastic modulus of liner..... =   .2800E+05
Poissons ratio of liner...... =   .1500E+00
```

HOOP AND AXIAL DEFORMATION CALCULATION

```
The input in-plane stresses are :
   SX =     .7530E+01
   SY =     .2830E+01
   SXY =    .0000E+00
The axial strain (ESZ) is :      .0000E+00
```

The Interaction Calculation Predicts

Angle from XX stress direction = .9

Radius	RR-Stress	TT-Stress	RT-Stress	ZZ-Stress	Radial Displ.	Hoop Displ.
1.851	.3046E-01	.2549E+01	-.1028E-01	.3869E+00	.2066E-02	-.3155E-04
1.909	.1631E+00	.3434E+01	-.3501E-01	.5396E+00	.2065E-02	-.3049E-04
1.951	.2950E+00	.3991E+01	-.4999E-01	.6429E+00	.2065E-02	-.2980E-04
2.009	.5143E+00	.4664E+01	-.6731E-01	.7767E+00	.2064E-02	-.2891E-04
2.051	.6934E+00	.5092E+01	-.7776E-01	.8678E+00	.2064E-02	-.2833E-04
2.109	.9610E+00	.5614E+01	-.8975E-01	.9863E+00	.2063E-02	-.2758E-04

Angle from XX stress direction = 89.1

Radius	RR-Stress	TT-Stress	RT-Stress	ZZ-Stress	Radial Displ.	Hoop Displ.
1.851	.3350E+00	.2948E+02	-.1028E-01	.4472E+01	-.6223E-06	-.3156E-04
1.909	.1150E+01	.2765E+02	-.3503E-01	.4320E+01	-.9293E-05	-.3051E-04
1.951	.1652E+01	.2646E+02	-.5002E-01	.4216E+01	-.1423E-04	-.2981E-04
2.009	.2244E+01	.2497E+02	-.6734E-01	.4083E+01	-.1945E-04	-.2893E-04
2.051	.2609E+01	.2400E+02	-.7780E-01	.3992E+01	-.2222E-04	-.2834E-04
2.109	.3041E+01	.2278E+02	-.8979E-01	.3873E+01	-.2484E-04	-.2759E-04

The Interaction Calculation for the liner
predicts the stresses listed below.
Note that the reference angle is the
first principal stress direction

Hoop Stresses in the Liner

Radius	At 0.(Pt 1)	At 90.(Pt 2)
1.83	.2183E+01	.3021E+02
1.86	.2743E+01	.2908E+02
1.90	.3251E+01	.2803E+02
1.93	.3714E+01	.2705E+02
1.96	.4137E+01	.2613E+02
2.00	.4524E+01	.2528E+02
2.03	.4878E+01	.2448E+02
2.06	.5204E+01	.2374E+02
2.10	.5504E+01	.2303E+02
2.13	.5782E+01	.2237E+02

Minimum .2183E+01 Maximum .3021E+02

Radial Stresses in the Liner

Radius	At 0.(Pt 1)	At 90.(Pt 2)
1.83	.0000E+00	.0000E+00
1.86	.5292E-01	.5214E+00
1.90	.1293E+00	.9893E+00
1.93	.2254E+00	.1410E+01
1.96	.3380E+00	.1787E+01
2.00	.4647E+00	.2127E+01
2.03	.6015E+00	.2433E+01
2.06	.7481E+00	.2708E+01
2.10	.9019E+00	.2956E+01
2.13	.1062E+01	.3180E+01

Minimum .0000E+00 Maximum .3180E+01

Axial Stresses in the Liner

Radius	At 0.(Pt 1)	At 90.(Pt 2)
1.83	.3274E+00	.4532E+01
1.86	.4193E+00	.4440E+01
1.90	.5071E+00	.4352E+01
1.93	.5910E+00	.4268E+01
1.96	.6713E+00	.4188E+01
2.00	.7482E+00	.4111E+01
2.03	.8219E+00	.4037E+01
2.06	.8928E+00	.3967E+01
2.10	.9609E+00	.3898E+01
2.13	.1027E+01	.3833E+01

Minimum .3274E+00 Maximum .4532E+01

Radial Displacements in the Liner

Radius	At 0.(Pt 1)	At 90.(Pt 2)
1.83	.2067E-02	.2546E-05
1.86	.2067E-02	-.3232E-05
1.90	.2066E-02	-.8210E-05
1.93	.2066E-02	-.1246E-04
1.96	.2065E-02	-.1606E-04
2.00	.2065E-02	-.1906E-04
2.03	.2064E-02	-.2151E-04
2.06	.2064E-02	-.2346E-04
2.10	.2064E-02	-.2497E-04
2.13	.2064E-02	-.2606E-04

Minimum -.2606E-04 Maximum .2067E-02

Hoop Displacements in the Liner

Radius	At 0.(Pt 1)	At 90.(Pt 2)
1.83	.0000E+00	-.1623E-07
1.86	.0000E+00	-.1590E-07
1.90	.0000E+00	-.1560E-07
1.93	.0000E+00	-.1531E-07
1.96	.0000E+00	-.1504E-07
2.00	.0000E+00	-.1478E-07
2.03	.0000E+00	-.1453E-07
2.06	.0000E+00	-.1430E-07
2.10	.0000E+00	-.1408E-07
2.13	.0000E+00	-.1388E-07

Minimum -.1623E-07 Maximum .0000E+00

Time: 16:45:34
Date: 1/27/89

```
*****************************************************************************************
*                                                                                       *
*      SSSSSSSS        HH        HH           AA           FFFFFFFFFFF   TTTTTTTTTTTTTT  *
*     SS      SSS      HH        HH          AAAA          FFFFFFFFFFF   TTTTTTTTTTTTTT  *
*    SS                HH        HH         AA  AA         FF                  TT        *
*     SSS              HHHHHHHHHHH         AA    AA        FF                  TT        *
*        SSS           HHHHHHHHHHH        AAAAAAAAAA       FFFFFF              TT        *
*           SSS        HH        HH      AAAAAAAAAAAA      FFFFFF              TT        *
*             SS       HH        HH     AA          AA     FF                  TT        *
*    SSS      SS       HH        HH    AA            AA    FF                  TT        *
*     SSSSSSSS         HH        HH    AA            AA    FF                  TT        *
*                                                                                       *
*****************************************************************************************
```

Analytical solutions for a lined circular hole

Code: SHAFT. Version 3.02, upgraded for SANDIA/NNWSI Jan 20, 1989
J.F.T. Agapito and Associates
Grand Junction (303) 242 4220

Analysis for comparison with JAC F.E. code, sec. 5.5.2 (bonded)

Analysis completed by :jra
The QA version of this code is : SHAFT 3.02
Plane strain analysis

Bonding between shaft wall and liner is assumed

Geometry and Properties of Shaft and Liner

```
Radius of unlined hole....... =      2.1300
Lining thickness............. =       .3000
Elastic modulus of medium.... =   .1520E+05
Poissons ratio of medium..... =   .2200E+00
Elastic modulus of liner..... =   .2800E+05
Poissons ratio of liner...... =   .1500E+00
```

HOOP AND AXIAL DEFORMATION CALCULATION

```
The input in-plane stresses are :
   SX =     .7530E+01
   SY =     .2830E+01
   SXY =     .0000E+00
The axial strain (ESZ) is :      .0000E+00
```

The Interaction Calculation Predicts

Angle from XX stress direction = 2.8

Radius	RR-Stress	TT-Stress	RT-Stress	ZZ-Stress	Radial Displ.	Hoop Displ.
1.855	.3819E-01	.2672E+01	-.3589E-01	.4065E+00	.2062E-02	-.9295E-04
1.905	.1539E+00	.3430E+01	-.9883E-01	.5376E+00	.2061E-02	-.9027E-04
1.955	.3118E+00	.4089E+01	-.1515E+00	.6601E+00	.2060E-02	-.8782E-04
2.005	.5016E+00	.4664E+01	-.1956E+00	.7749E+00	.2060E-02	-.8558E-04
2.055	.7153E+00	.5170E+01	-.2324E+00	.8828E+00	.2059E-02	-.8351E-04
2.105	.9463E+00	.5617E+01	-.2629E+00	.9845E+00	.2059E-02	-.8160E-04

Angle from XX stress direction = 87.2

Radius	RR-Stress	TT-Stress	RT-Stress	ZZ-Stress	Radial Displ.	Hoop Displ.
1.855	.3955E+00	.2929E+02	-.3590E-01	.4153E+01	.3108E-05	-.9297E-04
1.905	.1096E+01	.2772E+02	-.9885E-01	.4322E+01	-.4349E-05	-.9028E-04
1.955	.1693E+01	.2630E+02	-.1516E+00	.4199E+01	-.1022E-04	-.8784E-04
2.005	.2202E+01	.2503E+02	-.1957E+00	.4084E+01	-.1471E-04	-.8559E-04
2.055	.2637E+01	.2387E+02	-.2324E+00	.3977E+01	-.1800E-04	-.8352E-04
2.105	.3009E+01	.2282E+02	-.2629E+00	.3875E+01	-.2025E-04	-.8161E-04

The Interaction Calculation for the liner
predicts the stresses listed below.
Note that the reference angle is the
first principal stress direction

Hoop Stresses in the Liner

Radius	At 0.(Pt 1)	At 90.(Pt 2)	Minimum .2183E+01	Maximum .3021E+02
1.83	.2183E+01	.3021E+02	!1	2 !
1.86	.2743E+01	.2908E+02	!1	2 !
1.90	.3251E+01	.2803E+02	! 1	2 !
1.93	.3714E+01	.2705E+02	! 1	2 !
1.96	.4137E+01	.2613E+02	! 1	2 !
2.00	.4524E+01	.2528E+02	! 1	2 !
2.03	.4878E+01	.2449E+02	! 1	2 !
2.06	.5204E+01	.2374E+02	! 1	2 !
2.10	.5504E+01	.2303E+02	! 1	2 !
2.13	.5782E+01	.2237E+02	! 1	2 !

Radial Stresses in the Liner

Radius	At 0.(Pt 1)	At 90.(Pt 2)	Minimum .0000E+00	Maximum .3180E+01
1.83	.0000E+00	.0000E+00	!+	!
1.86	.5292E-01	.5214E+00	!1 2	!
1.90	.1293E+00	.9893E+00	! 1 2	!
1.93	.2254E+00	.1410E+01	! 1 2	!
1.96	.3380E+00	.1787E+01	! 1 2	!
2.00	.4642E+00	.2127E+01	! 1 2	!
2.03	.6015E+00	.2433E+01	! 1 2	!
2.06	.7481E+00	.2708E+01	! 1 2	!
2.10	.9019E+00	.2956E+01	! 1 2	!
2.13	.1062E+01	.3180E+01	! 1 2	!

Axial Stresses in the Liner

Radius	At 0.(Pt 1)	At 90.(Pt 2)	Minimum .3274E+00	Maximum .4532E+01
1.83	.3274E+00	.4532E+01	!1	2 !
1.86	.4193E+00	.4440E+01	!1	2 !
1.90	.5071E+00	.4352E+01	! 1	2 !
1.93	.5910E+00	.4268E+01	! 1	2 !
1.96	.6713E+00	.4188E+01	! 1	2 !
2.00	.7482E+00	.4111E+01	! 1	2 !
2.03	.8219E+00	.4037E+01	! 1	2 !
2.06	.8928E+00	.3967E+01	! 1	2 !
2.10	.9609E+00	.3898E+01	! 1	2 !
2.13	.1027E+01	.3833E+01	! 1	2 !

Radial Displacements in the Liner

Radius	At 0.(Pt 1)	At 90.(Pt 2)	Minimum -.2606E-04	Maximum .2067E-02
1.83	.2067E-02	.2546E-05	!2	1 !
1.86	.2067E-02	-.3232E-05	!2	1 !
1.90	.2066E-02	-.8210E-05	!2	1 !
1.93	.2066E-02	-.1246E-04	!2	1 !
1.96	.2065E-02	-.1606E-04	!2	1 !
2.00	.2065E-02	-.1906E-04	!2	1 !
2.03	.2064E-02	-.2151E-04	!2	1 !
2.06	.2064E-02	-.2346E-04	!2	1 !
2.10	.2064E-02	-.2497E-04	!2	1 !
2.13	.2064E-02	-.2606E-04	!2	1 !

Hoop Displacements in the Liner

Radius	At 0.(Pt 1)	At 90.(Pt 2)	Minimum -.1623E-07	Maximum .0000E+00
1.83	.0000E+00	-.1623E-07	!2	1 !
1.86	.0000E+00	-.1590E-07	!2	1 !
1.90	.0000E+00	-.1560E-07	! 2	1 !
1.93	.0000E+00	-.1531E-07	! 2	1 !
1.96	.0000E+00	-.1504E-07	! 2	1 !
2.00	.0000E+00	-.1478E-07	! 2	1 !
2.03	.0000E+00	-.1453E-07	! 2	1 !
2.06	.0000E+00	-.1430E-07	! 2	1 !
2.10	.0000E+00	-.1408E-07	! 2	1 !
2.13	.0000E+00	-.1388E-07	! 2	1 !

Time: 15: 5:17
Date: 1/27/89

```
*****************************************************************************************
*                                                                                       *
*      SSSSSSSS        HH       HH           AA           FFFFFFFFFFF   TTTTTTTTTTTTTT  *
*     SS     SSS      HH       HH          AAAA          FFFFFFFFFFF   TTTTTTTTTTTTTT  *
*    SS               HH       HH         AA  AA         FF                  TT        *
*     SSS             HHHHHHHHHHH        AA    AA        FF                  TT        *
*        SSS          HHHHHHHHHHH       AAAAAAAAAA       FFFFFF              TT        *
*           SSS       HH       HH      AAAAAAAAAAAA      FFFFFF              TT        *
*             SS      HH       HH     AA          AA     FF                  TT        *
*    SSS     SS       HH       HH    AA            AA    FF                  TT        *
*     SSSSSSSS        HH       HH    AA            AA    FF                  TT        *
*                                                                                       *
*****************************************************************************************
```

Analytical solutions for a lined circular hole

Code: SHAFT. Version 3.02, upgraded for SANDIA/NNWSI Jan 20, 1989
J.F.T. Agapito and Associates
Grand Junction (303) 242 4220

Analysis for comparison with JAC F.E. code, sec5.5.2 (unbonded)

Analysis completed by :jra
The QA version of this code is : SHAFT 3.02
Plane strain analysis

Slip allowed between liner and shaft wall

Geometry and Properties of Shaft and Liner

```
Radius of unlined hole....... =      2.1300
Lining thickness............. =       .3000
Elastic modulus of medium.... =   .1520E+05
Poissons ratio of medium..... =   .2200E+00
Elastic modulus of liner..... =   .2800E+05
Poissons ratio of liner...... =   .1500E+00
```

HOOP AND AXIAL DEFORMATION CALCULATION

The input in-plane stresses are :
SX = .7530E+01
SY = .2830E+01
SXY = .0000E+00
The axial strain (ESZ) is : .0000E+00

The Interaction Calculation Predicts

Angle from XX stress direction = 2.8

Radius	RR-Stress	TT-Stress	RT-Stress	ZZ-Stress	Radial Displ.	Hoop Displ.
1.855	.1652E+00	.1243E+02	-.1038E-01	.1889E+01	.2272E-02	-.7229E-04
1.905	.5109E+00	.1350E+02	-.2411E-01	.2102E+01	.2269E-02	-.6773E-04
1.955	.8707E+00	.1452E+02	-.2965E-01	.2309E+01	.2266E-02	-.6322E-04
2.005	.1238E+01	.1550E+02	-.2820E-01	.2511E+01	.2263E-02	-.5871E-04
2.055	.1609E+01	.1644E+02	-.2073E-01	.2707E+01	.2260E-02	-.5419E-04
2.105	.1979E+01	.1735E+02	-.8063E-02	.2900E+01	.2258E-02	-.4964E-04

Angle from XX stress direction = 87.2

Radius	RR-Stress	TT-Stress	RT-Stress	ZZ-Stress	Radial Displ.	Hoop Displ.
1.855	.2685E+00	.1953E+02	-.1038E-01	.2970E+01	-.2073E-03	-.7230E-04
1.905	.7394E+00	.1764E+02	-.2412E-01	.2757E+01	-.2121E-03	-.6774E-04
1.955	.1134E+01	.1587E+02	-.2966E-01	.2550E+01	-.2156E-03	-.6323E-04
2.005	.1466E+01	.1419E+02	-.2820E-01	.2349E+01	-.2180E-03	-.5872E-04
2.055	.1744E+01	.1260E+02	-.2073E-01	.2152E+01	-.2193E-03	-.5420E-04
2.105	.1976E+01	.1109E+02	-.8065E-02	.1960E+01	-.2197E-03	-.4965E-04

The Interaction Calculation for the liner
predicts the stresses listed below.
Note that the reference angle is the
first principal stress direction

Hoop Stresses in the Liner

Radius	At 0.(Pt 1)	At 90.(Pt 2)	Minimum .1034E+02	Maximum .2055E+02
1.83	.1184E+02	.2055E+02		
1.86	.1260E+02	.1923E+02		
1.90	.1332E+02	.1796E+02		
1.93	.1401E+02	.1675E+02		
1.96	.1469E+02	.1558E+02		
2.00	.1534E+02	.1446E+02		
2.03	.1598E+02	.1338E+02		
2.06	.1660E+02	.1234E+02		
2.10	.1722E+02	.1132E+02		
2.13	.1782E+02	.1034E+02		

Radial Stresses in the Liner

Radius	At 0.(Pt 1)	At 90.(Pt 2)	Minimum .0000E+00	Maximum .2164E+01
1.83	.0000E+00	.0000E+00		
1.86	.2212E+00	.3531E+00		
1.90	.4516E+00	.6671E+00		
1.93	.6888E+00	.9462E+00		
1.96	.9309E+00	.1194E+01		
2.00	.1176E+01	.1415E+01		
2.03	.1423E+01	.1611E+01		
2.06	.1671E+01	.1786E+01		
2.10	.1918E+01	.1940E+01		
2.13	.2164E+01	.2078E+01		

Axial Stresses in the Liner

Radius	At 0.(Pt 1)	At 90.(Pt 2)	Minimum .1776E+01	Maximum .3083E+01
1.83	.1776E+01	.3083E+01		
1.86	.1923E+01	.2937E+01		
1.90	.2065E+01	.2794E+01		
1.93	.2205E+01	.2654E+01		
1.96	.2343E+01	.2517E+01		
2.00	.2478E+01	.2382E+01		
2.03	.2610E+01	.2249E+01		
2.06	.2741E+01	.2118E+01		
2.10	.2870E+01	.1989E+01		
2.13	.2997E+01	.1862E+01		

Radial Displacements in the Liner

Radius	At 0.(Pt 1)	At 90.(Pt 2)	Minimum -.2257E-03	Maximum .2280E-02
1.83	.2280E-02	-.2103E-03		
1.86	.2278E-02	-.2142E-03		
1.90	.2275E-02	-.2174E-03		
1.93	.2273E-02	-.2200E-03		
1.96	.2271E-02	-.2221E-03		
2.00	.2269E-02	-.2236E-03		
2.03	.2268E-02	-.2247E-03		
2.06	.2266E-02	-.2254E-03		
2.10	.2265E-02	-.2257E-03		
2.13	.2263E-02	-.2255E-03		

Hoop Displacements in the Liner

Radius	At 0.(Pt 1)	At 90.(Pt 2)	Minimum -.1283E-07	Maximum .0000E+00
1.83	.0000E+00	-.1283E-07		
1.86	.0000E+00	-.1230E-07		
1.90	.0000E+00	-.1178E-07		
1.93	.0000E+00	-.1126E-07		
1.96	.0000E+00	-.1074E-07		
2.00	.0000E+00	-.1023E-07		
2.03	.0000E+00	-.9708E-08		
2.06	.0000E+00	-.9189E-08		
2.10	.0000E+00	-.8667E-08		
2.13	.0000E+00	-.8141E-08		

Time: 15:10: 6
Date: 1/27/89

```
*************************************************************************
*                                                                       *
*                                                                       *
*                      ****  V I S C O T  ****,                        *
*                                                                       *
*                  A TRANSIENT THERMOVISCOELASTIC AND                   *
*                 THERMOVISCOPLASTIC FINITE ELEMENT CODE                *
*                     FOR MODELING VISCOUS MECHANICAL                   *
*                        BEHAVIOR OF A ROCK MASS                        *
*                                                                       *
*                  PROBLEM GEOMETRY IS TWO DIMENSIONAL                  *
*                           AND AXISYMMETRIC                            *
*                                                                       *
*                                                                       *
*          ************************************************             *
*                                                                       *
*                                                                       *
*                                                                       *
*                                                                       *
*                 Originally Developed by Owen $ Hinton                 *
*                       Swansea University   U.K.                       *
*                                                                       *
*                                                                       *
*                  Converted by Agbabian Associates                     *
*                  Distributed by J.F.T. Agapito and Associates         *
*                                                                       *
*                                                                       *
*          ************************************************             *
*                                                                       *
*                                                                       *
*                       CIN = AGAPITO 4.4                               *
*                                                                       *
*                                                                       *
*                                                                       *
*************************************************************************
```

Shaft Verification

```
Total no. of Nodal Points                                  = 1219
Total no. of Elements                                      =  380
Total no. of Fixed Nodes                                   =   78
Type of Analysis Specified                                 =    2
( 1 - Plane Stress )
( 2 - Plane Strain )
( 3 - Axisymmetry  )
No. of Nodes / Element                                     =    8
No. of Different Materials                                 =    2
No. of Gauss Points in X and Y Dirs./Element               =    2
No. of Degrees of Freedom/Element                          =   16
Type of Time Stepping Algorithm                            =    1
Stiffness Matrix is Updated at:
( 1 - 1st  Time Step of 1st  Load Inc.      )
( 2 - Each Time Step of Each Load Inc.      )
( 3 - 1st  Time Step of Each Load Inc.      )
( 4 - 1st  Time Step of 1st  Load Inc. and
      2nd  Time Step of Each Load Inc.      )
No. of Increments in Which Total Load Applied              =    1
No. of Stress Components                                   =    3
( 3 - Plane Stress )
( 3 - Plane Strain )
( 4 - Axisymmetry  )
Plotting Tape File Flag                                    =    0
( 0 - Plot File not Created              )
( 1 - Plot File Created on File Unit 15 )
Thermal Loading Flag                                       =    0
( 0 - No Thermal Loading        )
( 1 - Steady Thermal Loading    )
( 2 - Transient Thermal Loading )
Initial Stress Flag                                        =    0
( 0 - No Initial Stress                )
( 1 - Initial Stress Generated         )
( 2 - Initial Stress Read From File    )
( 3 - Final Stress Written to File     )
(-1 - Initial Stress Generated and Final
      Stress Written to Specified File)
(-2 - Initial Stress Read and Final
      Stress Written to Same File      )
```

Hoop Stresses in the Liner

Radius	At 0.(Pt 1)	At 90.(Pt 2)
1.83	.1184E+02	.2055E+02
1.86	.1260E+02	.1923E+02
1.90	.1332E+02	.1796E+02
1.93	.1401E+02	.1675E+02
1.96	.1469E+02	.1558E+02
2.00	.1534E+02	.1446E+02
2.03	.1598E+02	.1338E+02
2.06	.1660E+02	.1234E+02
2.10	.1722E+02	.1132E+02
2.13	.1782E+02	.1034E+02

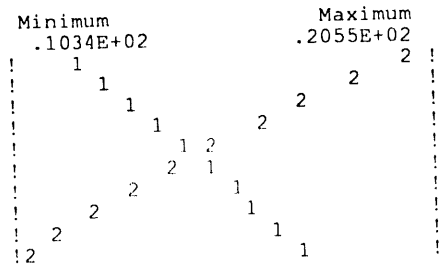

Radial Stresses in the Liner

Radius	At 0.(Pt 1)	At 90.(Pt 2)
1.83	.0000E+00	.0000E+00
1.86	.2212E+00	.3531E+00
1.90	.4516E+00	.6671E+00
1.93	.6888E+00	.9462E+00
1.96	.9309E+00	.1194E+01
2.00	.1176E+01	.1415E+01
2.03	.1423E+01	.1611E+01
2.06	.1671E+01	.1786E+01
2.10	.1918E+01	.1940E+01
2.13	.2164E+01	.2078E+01

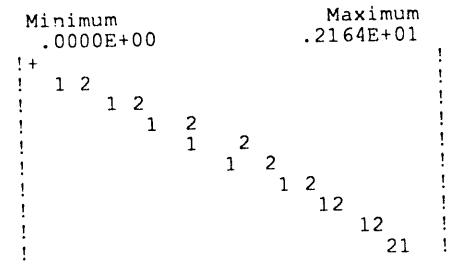

Axial Stresses in the Liner

Radius	At 0.(Pt 1)	At 90.(Pt 2)
1.83	.1776E+01	.3083E+01
1.86	.1923E+01	.2937E+01
1.90	.2065E+01	.2794E+01
1.93	.2205E+01	.2654E+01
1.96	.2343E+01	.2517E+01
2.00	.2478E+01	.2382E+01
2.03	.2610E+01	.2249E+01
2.06	.2741E+01	.2118E+01
2.10	.2870E+01	.1989E+01
2.13	.2997E+01	.1862E+01

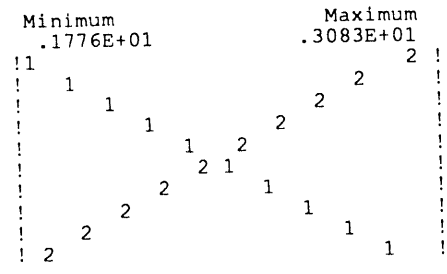

Radial Displacements in the Liner

Radius	At 0.(Pt 1)	At 90.(Pt 2)
1.83	.2280E-02	-.2103E-03
1.86	.2278E-02	-.2142E-03
1.90	.2275E-02	-.2174E-03
1.93	.2273E-02	-.2200E-03
1.96	.2271E-02	-.2221E-03
2.00	.2269E-02	-.2236E-03
2.03	.2268E-02	-.2247E-03
2.06	.2266E-02	-.2254E-03
2.10	.2265E-02	-.2257E-03
2.13	.2263E-02	-.2255E-03

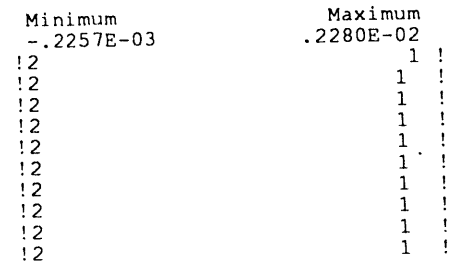

Hoop Displacements in the Liner

Radius	At 0.(Pt 1)	At 90.(Pt 2)
1.83	.0000E+00	-.1283E-07
1.86	.0000E+00	-.1230E-07
1.90	.0000E+00	-.1178E-07
1.93	.0000E+00	-.1126E-07
1.96	.0000E+00	-.1074E-07
2.00	.0000E+00	-.1023E-07
2.03	.0000E+00	-.9708E-08
2.06	.0000E+00	-.9189E-08
2.10	.0000E+00	-.8667E-08
2.13	.0000E+00	-.8141E-08

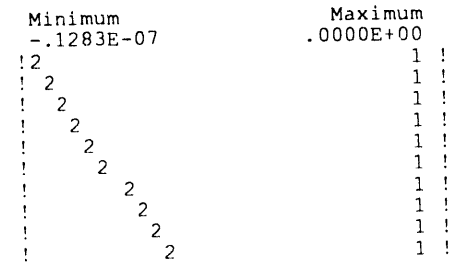

Time: 15:10: 6
Date: 1/27/89

```
*************************************************************************
*                                                                       *
*                                                                       *
*                      ****  V I S C O T  ****,                        *
*                                                                       *
*                  A TRANSIENT THERMOVISCOELASTIC AND                   *
*                THERMOVISCOPLASTIC FINITE ELEMENT CODE                 *
*                    FOR MODELING VISCOUS MECHANICAL                    *
*                        BEHAVIOR OF A ROCK MASS                        *
*                                                                       *
*                  PROBLEM GEOMETRY IS TWO DIMENSIONAL                  *
*                           AND AXISYMMETRIC                            *
*                                                                       *
*                                                                       *
*          ***************************************************          *
*                                                                       *
*                                                                       *
*                                                                       *
*                                                                       *
*                 Originally Developed by Owen $ Hinton                 *
*                       Swansea University   U.K.                       *
*                                                                       *
*                                                                       *
*                  Converted by Agbabian Associates                     *
*                  Distributed by J.F.T. Agapito and Associates         *
*                                                                       *
*                                                                       *
*          ***************************************************          *
*                                                                       *
*                                                                       *
*                      CIN = AGAPITO 4.4                                *
*                                                                       *
*                                                                       *
*                                                                       *
*************************************************************************
```

Shaft Verification

```
Total no. of Nodal Points                                  = 1219
Total no. of Elements                                      =  380
Total no. of Fixed Nodes                                   =   78
Type of Analysis Specified                                 =    2
( 1 - Plane Stress )
( 2 - Plane Strain )
( 3 - Axisymmetry  )
No. of Nodes / Element                                     =    8
No. of Different Materials                                 =    2
No. of Gauss Points in X and Y Dirs./Element               =    2
No. of Degrees of Freedom/Element                          =   16
Type of Time Stepping Algorithm                            =    1
Stiffness Matrix is Updated at:
( 1 - 1st  Time Step of 1st  Load Inc.     )
( 2 - Each Time Step of Each Load Inc.     )
( 3 - 1st  Time Step of Each Load Inc.     )
( 4 - 1st  Time Step of 1st  Load Inc. and
      2nd  Time Step of Each Load Inc.     )
No. of Increments in Which Total Load Applied              =    1
No. of Stress Components                                   =    3
( 3 - Plane Stress )
( 3 - Plane Strain )
( 4 - Axisymmetry  )
Plotting Tape File Flag                                    =    0
( 0 - Plot File not Created            )
( 1 - Plot File Created on File Unit 15 )
Thermal Loading Flag                                       =    0
( 0 - No Thermal Loading        )
( 1 - Steady Thermal Loading    )
( 2 - Transient Thermal Loading )
Initial Stress Flag                                        =    0
( 0 - No Initial Stress                )
( 1 - Initial Stress Generated         )
( 2 - Initial Stress Read From File    )
( 3 - Final Stress Written to File     )
(-1 - Initial Stress Generated and Final
      Stress Written to Specified File)
(-2 - Initial Stress Read and Final
      Stress Written to Same File      )
```

Initial Temperature = 0
(0 - No Initial Temperature)
(1 - Initial Temperature Generated)
(2 - Initial Temperature Read From File)
Restart Tapes = 0
(0 - Restart Tapes not Saved)
(1 - Restart Tapes Saved)
Gauss Point Coordinates and Initial State = 0
(0 - Not Printed)
(1 - Printed)

Element	Property	Node Numbers								
1	1	1	2	3	15	23	22	21	14	0
2	1	3	4	5	16	25	24	23	15	0
3	1	5	6	7	17	27	26	25	16	0
4	1	7	8	9	18	29	28	27	17	0
5	1	9	10	11	19	31	30	29	18	0
6	1	11	12	13	20	33	32	31	19	0
7	1	21	22	23	35	43	42	41	34	0
8	1	23	24	25	36	45	44	43	35	0
9	1	25	26	27	37	47	46	45	36	0
10	1	27	28	29	38	49	48	47	37	0
11	1	29	30	31	39	51	50	49	38	0
12	1	31	32	33	40	53	52	51	39	0
13	1	41	42	43	55	63	62	61	54	0
14	1	43	44	45	56	65	64	63	55	0
15	1	45	46	47	57	67	66	65	56	0
16	1	47	48	49	58	69	68	67	57	0
17	1	49	50	51	59	71	70	69	58	0
18	1	51	52	53	60	73	72	71	59	0
19	1	61	62	63	75	83	82	81	74	0
20	1	63	64	65	76	85	84	83	75	0
21	1	65	66	67	77	87	86	85	76	0
22	1	67	68	69	78	89	88	87	77	0
23	1	69	70	71	79	91	90	89	78	0
24	1	71	72	73	80	93	92	91	79	0
25	1	81	82	83	95	103	102	101	94	0
26	1	83	84	85	96	105	104	103	95	0
27	1	85	86	87	97	107	106	105	96	0
28	1	87	88	89	98	109	108	107	97	0
29	1	89	90	91	99	111	110	109	98	0
30	1	91	92	93	100	113	112	111	99	0
31	1	101	102	103	115	123	122	121	114	0
32	1	103	104	105	116	125	124	123	115	0
33	1	105	106	107	117	127	126	125	116	0
34	1	107	108	109	118	129	128	127	117	0
35	1	109	110	111	119	131	130	129	118	0
36	1	111	112	113	120	133	132	131	119	0
37	1	121	122	123	135	143	142	141	134	0
38	1	123	124	125	136	145	144	143	135	0
39	1	125	126	127	137	147	146	145	136	0
40	1	127	128	129	138	149	148	147	137	0
41	1	129	130	131	139	151	150	149	138	0
42	1	131	132	133	140	153	152	151	139	0
43	1	141	142	143	155	163	162	161	154	0
44	1	143	144	145	156	165	164	163	155	0
45	1	145	146	147	157	167	166	165	156	0
46	1	147	148	149	158	169	168	167	157	0
47	1	149	150	151	159	171	170	169	158	0
48	1	151	152	153	160	173	172	171	159	0
49	1	161	162	163	175	183	182	181	174	0
50	1	163	164	165	176	185	184	183	175	0
51	1	165	166	167	177	187	186	185	176	0
52	1	167	168	169	178	189	188	187	177	0
53	1	169	170	171	179	191	190	189	178	0
54	1	171	172	173	180	193	192	191	179	0
55	1	181	182	183	195	203	202	201	194	0
56	1	183	184	185	196	205	204	203	195	0
57	1	185	186	187	197	207	206	205	196	0
58	1	187	188	189	198	209	208	207	197	0
59	1	189	190	191	199	211	210	209	198	0
60	1	191	192	193	200	213	212	211	199	0
61	1	201	202	203	215	223	222	221	214	0
62	1	203	204	205	216	225	224	223	215	0
63	1	205	206	207	217	227	226	225	216	0
64	1	207	208	209	218	229	228	227	217	0
65	1	209	210	211	219	231	230	229	218	0
66	1	211	212	213	220	233	232	231	219	0

67	1	221	222	223	235	243	242	241	234	0
68	1	223	224	225	236	245	244	243	235	0
69	1	225	226	227	237	247	246	245	236	0
70	1	227	228	229	238	249	248	247	237	0
71	1	229	230	231	239	251	250	249	238	0
72	1	231	232	233	240	253	252	251	239	0
73	1	241	242	243	255	263	262	261	254	0
74	1	243	244	245	256	265	264	263	255	0
75	1	245	246	247	257	267	266	265	256	0
76	1	247	248	249	258	269	268	267	257	0
77	1	249	250	251	259	271	270	269	258	0
78	1	251	252	253	260	273	272	271	259	0
79	1	261	262	263	275	283	282	281	274	0
80	1	263	264	265	276	285	284	283	275	0
81	1	265	266	267	277	287	286	285	276	0
82	1	267	268	269	278	289	288	287	277	0
83	1	269	270	271	279	291	290	289	278	0
84	1	271	272	273	280	293	292	291	279	0
85	1	281	282	283	295	303	302	301	294	0
86	1	283	284	285	296	305	304	303	295	0
87	1	285	286	287	297	307	306	305	296	0
88	1	287	288	289	298	309	308	307	297	0
89	1	289	290	291	299	311	310	309	298	0
90	1	291	292	293	300	313	312	311	299	0
91	1	301	302	303	315	323	322	321	314	0
92	1	303	304	305	316	325	324	323	315	0
93	1	305	306	307	317	327	326	325	316	0
94	1	307	308	309	318	329	328	327	317	0
95	1	309	310	311	319	331	330	329	318	0
96	1	311	312	313	320	333	332	331	319	0
97	1	321	322	323	335	343	342	341	334	0
98	1	323	324	325	336	345	344	343	335	0
99	1	325	326	327	337	347	346	345	336	0
100	1	327	328	329	338	349	348	347	337	0
101	1	329	330	331	339	351	350	349	338	0
102	1	331	332	333	340	353	352	351	339	0
103	1	341	342	343	355	363	362	361	354	0
104	1	343	344	345	356	365	364	363	355	0
105	1	345	346	347	357	367	366	365	356	0
106	1	347	348	349	358	369	368	367	357	0
107	1	349	350	351	359	371	370	369	358	0
108	1	351	352	353	360	373	372	371	359	0
109	1	361	362	363	375	383	382	381	374	0
110	1	363	364	365	376	385	384	383	375	0
111	1	365	366	367	377	387	386	385	376	0
112	1	367	368	369	378	389	388	387	377	0
113	1	369	370	371	379	391	390	389	378	0
114	1	371	372	373	380	393	392	391	379	0
115	1	381	382	383	395	403	402	401	394	0
116	1	383	384	385	396	405	404	403	395	0
117	1	385	386	387	397	407	406	405	396	0
118	1	387	388	389	398	409	408	407	397	0
119	1	389	390	391	399	411	410	409	398	0
120	1	391	392	393	400	413	412	411	399	0
121	1	213	200	193	415	427	426	425	414	0
122	1	193	180	173	416	429	428	427	415	0
123	1	173	160	153	417	431	430	429	416	0
124	1	153	140	133	418	433	432	431	417	0
125	1	133	120	113	419	435	434	433	418	0
126	1	113	100	93	420	437	436	435	419	0
127	1	93	80	73	421	439	438	437	420	0
128	1	73	60	53	422	441	440	439	421	0
129	1	53	40	33	423	443	442	441	422	0
130	1	33	20	13	424	445	444	443	423	0
131	1	425	426	427	447	459	458	457	446	0
132	1	427	428	429	448	461	460	459	447	0
133	1	429	430	431	449	463	462	461	448	0
134	1	431	432	433	450	465	464	463	449	0
135	1	433	434	435	451	467	466	465	450	0
136	1	435	436	437	452	469	468	467	451	0
137	1	437	438	439	453	471	470	469	452	0
138	1	439	440	441	454	473	472	471	453	0
139	1	441	442	443	455	475	474	473	454	0
140	1	443	444	445	456	477	476	475	455	0
141	1	457	458	459	479	491	490	489	478	0
142	1	459	460	461	480	493	492	491	479	0
143	1	461	462	463	481	495	494	493	480	0
144	1	463	464	465	482	497	496	495	481	0
145	1	465	466	467	483	499	498	497	482	0

146	1	467	468	469	484	501	500	499	483	0
147	1	469	470	471	485	503	502	501	484	0
148	1	471	472	473	486	505	504	503	485	0
149	1	473	474	475	487	507	506	505	486	0
150	1	475	476	477	488	509	508	507	487	0
151	1	489	490	491	511	523	522	521	510	0
152	1	491	492	493	512	525	524	523	511	0
153	1	493	494	495	513	527	526	525	512	0
154	1	495	496	497	514	529	528	527	513	0
155	1	497	498	499	515	531	530	529	514	0
156	1	499	500	501	516	533	532	531	515	0
157	1	501	502	503	517	535	534	533	516	0
158	1	503	504	505	518	537	536	535	517	0
159	1	505	506	507	519	539	538	537	518	0
160	1	507	508	509	520	541	540	539	519	0
161	1	521	522	523	543	555	554	553	542	0
162	1	523	524	525	544	557	556	555	543	0
163	1	525	526	527	545	559	558	557	544	0
164	1	527	528	529	546	561	560	559	545	0
165	1	529	530	531	547	563	562	561	546	0
166	1	531	532	533	548	565	564	563	547	0
167	1	533	534	535	549	567	566	565	548	0
168	1	535	536	537	550	569	568	567	549	0
169	1	537	538	539	551	571	570	569	550	0
170	1	539	540	541	552	573	572	571	551	0
171	1	553	554	555	575	587	586	585	574	0
172	1	555	556	557	576	589	588	587	575	0
173	1	557	558	559	577	591	590	589	576	0
174	1	559	560	561	578	593	592	591	577	0
175	1	561	562	563	579	595	594	593	578	0
176	1	563	564	565	580	597	596	595	579	0
177	1	565	566	567	581	599	598	597	580	0
178	1	567	568	569	582	601	600	599	581	0
179	1	569	570	571	583	603	602	601	582	0
180	1	571	572	573	584	605	604	603	583	0
181	1	585	586	587	607	619	618	617	606	0
182	1	587	588	589	608	621	620	619	607	0
183	1	589	590	591	609	623	622	621	608	0
184	1	591	592	593	610	625	624	623	609	0
185	1	593	594	595	611	627	626	625	610	0
186	1	595	596	597	612	629	628	627	611	0
187	1	597	598	599	613	631	630	629	612	0
188	1	599	600	601	614	633	632	631	613	0
189	1	601	602	603	615	635	634	633	614	0
190	1	603	604	605	616	637	636	635	615	0
191	1	617	618	619	639	651	650	649	638	0
192	1	619	620	621	640	653	652	651	639	0
193	1	621	622	623	641	655	654	653	640	0
194	1	623	624	625	642	657	656	655	641	0
195	1	625	626	627	643	659	658	657	642	0
196	1	627	628	629	644	661	660	659	643	0
197	1	629	630	631	645	663	662	661	644	0
198	1	631	632	633	646	665	664	663	645	0
199	1	633	634	635	647	667	666	665	646	0
200	1	635	636	637	648	669	668	667	647	0
201	1	649	650	651	671	683	682	681	670	0
202	1	651	652	653	672	685	684	683	671	0
203	1	653	654	655	673	687	686	685	672	0
204	1	655	656	657	674	689	688	687	673	0
205	1	657	658	659	675	691	690	689	674	0
206	1	659	660	661	676	693	692	691	675	0
207	1	661	662	663	677	695	694	693	676	0
208	1	663	664	665	678	697	696	695	677	0
209	1	665	666	667	679	699	698	697	678	0
210	1	667	668	669	680	701	700	699	679	0
211	1	681	682	683	703	715	714	713	702	0
212	1	683	684	685	704	717	716	715	703	0
213	1	685	686	687	705	719	718	717	704	0
214	1	687	688	689	706	721	720	719	705	0
215	1	689	690	691	707	723	722	721	706	0
216	1	691	692	693	708	725	724	723	707	0
217	1	693	694	695	709	727	726	725	708	0
218	1	695	696	697	710	729	728	727	709	0
219	1	697	698	699	711	731	730	729	710	0
220	1	699	700	701	712	733	732	731	711	0
221	1	413	400	393	735	746	745	744	734	0
222	1	393	380	373	736	748	747	746	735	0
223	1	373	360	353	737	750	749	748	736	0
224	1	353	340	333	738	752	751	750	737	0

225	1	333	320	313	739	754	753	752	738	0
226	1	313	300	293	740	756	755	754	739	0
227	1	293	280	273	741	758	757	756	740	0
228	1	273	260	253	742	760	759	758	741	0
229	1	253	240	233	743	762	761	760	742	0
230	1	233	220	213	414	425	763	762	743	0
231	1	744	745	746	765	776	775	774	764	0
232	1	746	747	748	766	778	777	776	765	0
233	1	748	749	750	767	780	779	778	766	0
234	1	750	751	752	768	782	781	780	767	0
235	1	752	753	754	769	784	783	782	768	0
236	1	754	755	756	770	786	785	784	769	0
237	1	756	757	758	771	788	787	786	770	0
238	1	758	759	760	772	790	789	788	771	0
239	1	760	761	762	773	792	791	790	772	0
240	1	762	763	425	446	457	793	792	773	0
241	1	774	775	776	795	806	805	804	794	0
242	1	776	777	778	796	808	807	806	795	0
243	1	778	779	780	797	810	809	808	796	0
244	1	780	781	782	798	812	811	810	797	0
245	1	782	783	784	799	814	813	812	798	0
246	1	784	785	786	800	816	815	814	799	0
247	1	786	787	788	801	818	817	816	800	0
248	1	788	789	790	802	820	819	818	801	0
249	1	790	791	792	803	822	821	820	802	0
250	1	792	793	457	478	489	823	822	803	0
251	1	804	805	806	825	836	835	834	824	0
252	1	806	807	808	826	838	837	836	825	0
253	1	808	809	810	827	840	839	838	826	0
254	1	810	811	812	828	842	841	840	827	0
255	1	812	813	814	829	844	843	842	828	0
256	1	814	815	816	830	846	845	844	829	0
257	1	816	817	818	831	848	847	846	830	0
258	1	818	819	820	832	850	849	848	831	0
259	1	820	821	822	833	852	851	850	832	0
260	1	822	823	489	510	521	853	852	833	0
261	1	834	835	836	855	866	865	864	854	0
262	1	836	837	838	856	868	867	866	855	0
263	1	838	839	840	857	870	869	868	856	0
264	1	840	841	842	858	872	871	870	857	0
265	1	842	843	844	859	874	873	872	858	0
266	1	844	845	846	860	876	875	874	859	0
267	1	846	847	848	861	878	877	876	860	0
268	1	848	849	850	862	880	879	878	861	0
269	1	850	851	852	863	882	881	880	862	0
270	1	852	853	521	542	553	883	882	863	0
271	1	864	865	866	885	896	895	894	884	0
272	1	866	867	868	886	898	897	896	885	0
273	1	868	869	870	887	900	899	898	886	0
274	1	870	871	872	888	902	901	900	887	0
275	1	872	873	874	889	904	903	902	888	0
276	1	874	875	876	890	906	905	904	889	0
277	1	876	877	878	891	908	907	906	890	0
278	1	878	879	880	892	910	909	908	891	0
279	1	880	881	882	893	912	911	910	892	0
280	1	882	883	553	574	585	913	912	893	0
281	1	894	895	896	915	926	925	924	914	0
282	1	896	897	898	916	928	927	926	915	0
283	1	898	899	900	917	930	929	928	916	0
284	1	900	901	902	918	932	931	930	917	0
285	1	902	903	904	919	934	933	932	918	0
286	1	904	905	906	920	936	935	934	919	0
287	1	906	907	908	921	938	937	936	920	0
288	1	908	909	910	922	940	939	938	921	0
289	1	910	911	912	923	942	941	940	922	0
290	1	912	913	585	606	617	943	942	923	0
291	1	924	925	926	945	956	955	954	944	0
292	1	926	927	928	946	958	957	956	945	0
293	1	928	929	930	947	960	959	958	946	0
294	1	930	931	932	948	962	961	960	947	0
295	1	932	933	934	949	964	963	962	948	0
296	1	934	935	936	950	966	965	964	949	0
297	1	936	937	938	951	968	967	966	950	0
298	1	938	939	940	952	970	969	968	951	0
299	1	940	941	942	953	972	971	970	952	0
300	1	942	943	617	638	649	973	972	953	0
301	1	954	955	956	975	986	985	984	974	0
302	1	956	957	958	976	988	987	986	975	0
303	1	958	959	960	977	990	989	988	976	0

304	1	960	961	962	978	992	991	990	977	0
305	1	962	963	964	979	994	993	992	978	0
306	1	964	965	966	980	996	995	994	979	0
307	1	966	967	968	981	998	997	996	980	0
308	1	968	969	970	982	1000	999	998	981	0
309	1	970	971	972	983	1002	1001	1000	982	0
310	1	972	973	649	670	681	1003	1002	983	0
311	1	984	985	986	1005	1016	1015	1014	1004	0
312	1	986	987	988	1006	1018	1017	1016	1005	0
313	1	988	989	990	1007	1020	1019	1018	1006	0
314	1	990	991	992	1008	1022	1021	1020	1007	0
315	1	992	993	994	1009	1024	1023	1022	1008	0
316	1	994	995	996	1010	1026	1025	1024	1009	0
317	1	996	997	998	1011	1028	1027	1026	1010	0
318	1	998	999	1000	1012	1030	1029	1028	1011	0
319	1	1000	1001	1002	1013	1032	1031	1030	1012	0
320	1	1002	1003	681	702	713	1033	1032	1013	0
321	2	713	714	715	1035	1047	1046	1045	1034	0
322	2	715	716	717	1036	1049	1048	1047	1035	0
323	2	717	718	719	1037	1051	1050	1049	1036	0
324	2	719	720	721	1038	1053	1052	1051	1037	0
325	2	721	722	723	1039	1055	1054	1053	1038	0
326	2	723	724	725	1040	1057	1056	1055	1039	0
327	2	725	726	727	1041	1059	1058	1057	1040	0
328	2	727	728	729	1042	1061	1060	1059	1041	0
329	2	729	730	731	1043	1063	1062	1061	1042	0
330	2	731	732	733	1044	1065	1064	1063	1043	0
331	2	1045	1046	1047	1067	1079	1078	1077	1066	0
332	2	1047	1048	1049	1068	1081	1080	1079	1067	0
333	2	1049	1050	1051	1069	1083	1082	1081	1068	0
334	2	1051	1052	1053	1070	1085	1084	1083	1069	0
335	2	1053	1054	1055	1071	1087	1086	1085	1070	0
336	2	1055	1056	1057	1072	1089	1088	1087	1071	0
337	2	1057	1058	1059	1073	1091	1090	1089	1072	0
338	2	1059	1060	1061	1074	1093	1092	1091	1073	0
339	2	1061	1062	1063	1075	1095	1094	1093	1074	0
340	2	1063	1064	1065	1076	1097	1096	1095	1075	0
341	2	1077	1078	1079	1099	1111	1110	1109	1098	0
342	2	1079	1080	1081	1100	1113	1112	1111	1099	0
343	2	1081	1082	1083	1101	1115	1114	1113	1100	0
344	2	1083	1084	1085	1102	1117	1116	1115	1101	0
345	2	1085	1086	1087	1103	1119	1118	1117	1102	0
346	2	1087	1088	1089	1104	1121	1120	1119	1103	0
347	2	1089	1090	1091	1105	1123	1122	1121	1104	0
348	2	1091	1092	1093	1106	1125	1124	1123	1105	0
349	2	1093	1094	1095	1107	1127	1126	1125	1106	0
350	2	1095	1096	1097	1108	1129	1128	1127	1107	0
351	2	1014	1015	1016	1131	1142	1141	1140	1130	0
352	2	1016	1017	1018	1132	1144	1143	1142	1131	0
353	2	1018	1019	1020	1133	1146	1145	1144	1132	0
354	2	1020	1021	1022	1134	1148	1147	1146	1133	0
355	2	1022	1023	1024	1135	1150	1149	1148	1134	0
356	2	1024	1025	1026	1136	1152	1151	1150	1135	0
357	2	1026	1027	1028	1137	1154	1153	1152	1136	0
358	2	1028	1029	1030	1138	1156	1155	1154	1137	0
359	2	1030	1031	1032	1139	1158	1157	1156	1138	0
360	2	1032	1033	713	1034	1045	1159	1158	1139	0
361	2	1140	1141	1142	1161	1172	1171	1170	1160	0
362	2	1142	1143	1144	1162	1174	1173	1172	1161	0
363	2	1144	1145	1146	1163	1176	1175	1174	1162	0
364	2	1146	1147	1148	1164	1178	1177	1176	1163	0
365	2	1148	1149	1150	1165	1180	1179	1178	1164	0
366	2	1150	1151	1152	1166	1182	1181	1180	1165	0
367	2	1152	1153	1154	1167	1184	1183	1182	1166	0
368	2	1154	1155	1156	1168	1186	1185	1184	1167	0
369	2	1156	1157	1158	1169	1188	1187	1186	1168	0
370	2	1158	1159	1045	1066	1077	1189	1188	1169	0
371	2	1170	1171	1172	1191	1202	1201	1200	1190	0
372	2	1172	1173	1174	1192	1204	1203	1202	1191	0
373	2	1174	1175	1176	1193	1206	1205	1204	1192	0
374	2	1176	1177	1178	1194	1208	1207	1206	1193	0
375	2	1178	1179	1180	1195	1210	1209	1208	1194	0
376	2	1180	1181	1182	1196	1212	1211	1210	1195	0
377	2	1182	1183	1184	1197	1214	1213	1212	1196	0
378	2	1184	1185	1186	1198	1216	1215	1214	1197	0
379	2	1186	1187	1188	1199	1218	1217	1216	1198	0
380	2	1188	1189	1077	1098	1109	1219	1218	1199	0

Node	X-Coord.	Y-Coord.	Node	X-Coord.	Y-Coord.
1	.00000E+00	.15000E+02	2	.00000E+00	.13780E+02
3	.00000E+00	.12560E+02	4	.00000E+00	.11585E+02
5	.00000E+00	.10609E+02	6	.00000E+00	.98283E+01
7	.00000E+00	.90476E+01	8	.00000E+00	.84231E+01
9	.00000E+00	.77986E+01	10	.00000E+00	.72990E+01
11	.00000E+00	.67994E+01	12	.00000E+00	.63997E+01
13	.00000E+00	.60000E+01	14	.75000E+00	.15000E+02
15	.61343E+00	.12558E+02	16	.50417E+00	.10605E+02
17	.41676E+00	.90425E+01	18	.34684E+00	.77924E+01
19	.29090E+00	.67923E+01	20	.24615E+00	.59923E+01
21	.15000E+01	.15000E+02	22	.13629E+01	.13777E+02
23	.12259E+01	.12554E+02	24	.11162E+01	.11576E+02
25	.10066E+01	.10597E+02	26	.91888E+00	.98145E+01
27	.83116E+00	.90318E+01	28	.76099E+00	.84057E+01
29	.69081E+00	.77795E+01	30	.63467E+00	.72786E+01
31	.57854E+00	.67776E+01	32	.53363E+00	.63769E+01
33	.48871E+00	.59761E+01	34	.22500E+01	.15000E+02
35	.18374E+01	.12547E+02	36	.15073E+01	.10585E+02
37	.12432E+01	.90156E+01	38	.10319E+01	.77598E+01
39	.86291E+00	.67552E+01	40	.72770E+00	.59515E+01
41	.30000E+01	.15000E+02	42	.27239E+01	.13769E+02
43	.24479E+01	.12538E+02	44	.22270E+01	.11554E+02
45	.20062E+01	.10569E+02	46	.18295E+01	.97814E+01
47	.16529E+01	.89937E+01	48	.15115E+01	.83636E+01
49	.13702E+01	.77334E+01	50	.12571E+01	.72293E+01
51	.11440E+01	.67251E+01	52	.10536E+01	.63218E+01
53	.96311E+00	.59185E+01	54	.37500E+01	.15000E+02
55	.30574E+01	.12527E+02	56	.25034E+01	.10549E+02
57	.20601E+01	.89663E+01	58	.17056E+01	.77002E+01
59	.14219E+01	.66874E+01	60	.11949E+01	.58771E+01
61	.45000E+01	.15000E+02	62	.40830E+01	.13757E+02
63	.36660E+01	.12514E+02	64	.33324E+01	.11519E+02
65	.29988E+01	.10525E+02	66	.27320E+01	.97289E+01
67	.24651E+01	.89333E+01	68	.22516E+01	.82968E+01
69	.20381E+01	.76603E+01	70	.18673E+01	.71511E+01
71	.16965E+01	.66419E+01	72	.15598E+01	.62345E+01
73	.14232E+01	.58272E+01	74	.52500E+01	.15000E+02
75	.42736E+01	.12498E+02	76	.34925E+01	.10496E+02
77	.28676E+01	.88947E+01	78	.23677E+01	.76136E+01
79	.19678E+01	.65888E+01	80	.16479E+01	.57689E+01
81	.60000E+01	.15000E+02	82	.54401E+01	.13740E+02
83	.48803E+01	.12480E+02	84	.44324E+01	.11472E+02
85	.39845E+01	.10464E+02	86	.36262E+01	.96571E+01
87	.32678E+01	.88506E+01	88	.29812E+01	.82054E+01
89	.26945E+01	.75602E+01	90	.24652E+01	.70441E+01
91	.22359E+01	.65279E+01	92	.20524E+01	.61150E+01
93	.18690E+01	.57021E+01	94	.67500E+01	.15000E+02
95	.54859E+01	.12459E+02	96	.44747E+01	.10427E+02
97	.36657E+01	.88009E+01	98	.30185E+01	.75001E+01
99	.25007E+01	.64594E+01	100	.20865E+01	.56269E+01
101	.75000E+01	.15000E+02	102	.67953E+01	.13718E+02
103	.60906E+01	.12437E+02	104	.55269E+01	.11411E+02
105	.49631E+01	.10386E+02	106	.45121E+01	.95658E+01
107	.40611E+01	.87455E+01	108	.37003E+01	.80893E+01
109	.33395E+01	.74331E+01	110	.30509E+01	.69082E+01
111	.27623E+01	.63832E+01	112	.25313E+01	.59632E+01
113	.23004E+01	.55433E+01	114	.82500E+01	.15000E+02
115	.66944E+01	.12412E+02	116	.54498E+01	.10341E+02
117	.44542E+01	.86847E+01	118	.36577E+01	.73595E+01
119	.30205E+01	.62993E+01	120	.25108E+01	.54512E+01
121	.90000E+01	.15000E+02	122	.81486E+01	.13692E+02
123	.72971E+01	.12385E+02	124	.66160E+01	.11338E+02
125	.59348E+01	.10292E+02	126	.53899E+01	.94551E+01
127	.48450E+01	.86182E+01	128	.44090E+01	.79486E+01
129	.39731E+01	.72790E+01	130	.36243E+01	.67434E+01
131	.32756E+01	.62077E+01	132	.29966E+01	.57792E+01
133	.27176E+01	.53507E+01	134	.97500E+01	.15000E+02
135	.78989E+01	.12355E+02	136	.64180E+01	.10239E+02
137	.52333E+01	.85461E+01	138	.42856E+01	.71919E+01
139	.35273E+01	.61085E+01	140	.29208E+01	.52418E+01
141	.10500E+02	.15000E+02	142	.94999E+01	.13662E+02
143	.84997E+01	.12323E+02	144	.76996E+01	.11252E+02
145	.68995E+01	.10182E+02	146	.62594E+01	.93251E+01
147	.56193E+01	.84685E+01	148	.51072E+01	.77832E+01
149	.45952E+01	.70980E+01	150	.41855E+01	.65497E+01
151	.37759E+01	.60015E+01	152	.34481E+01	.55630E+01
153	.31204E+01	.51244E+01	154	.11250E+02	.15000E+02
155	.90996E+01	.12289E+02	156	.73792E+01	.10120E+02

157	.60029E+01	.83853E+01	158	.49019E+01	.69973E+01
159	.40211E+01	.58869E+01	160	.33164E+01	.49986E+01
161	.12000E+02	.15000E+02	162	.10849E+02	.13626E+02
163	.96984E+01	.12253E+02	164	.87778E+01	.11154E+02
165	.78572E+01	.10055E+02	166	.71207E+01	.91757E+01
167	.63842E+01	.82965E+01	168	.57950E+01	.75932E+01
169	.52058E+01	.68899E+01	170	.47344E+01	.63272E+01
171	.42631E+01	.57646E+01	172	.38860E+01	.53144E+01
173	.35089E+01	.48643E+01	174	.12750E+02	.15000E+02
175	.10296E+02	.12214E+02	176	.83334E+01	.99852E+01
177	.67631E+01	.82021E+01	178	.55068E+01	.67757E+01
179	.45018E+01	.56346E+01	180	.36978E+01	.47216E+01
181	.13500E+02	.15000E+02	182	.12197E+02	.13587E+02
183	.10893E+02	.12173E+02	184	.98506E+01	.11042E+02
185	.88079E+01	.99115E+01	186	.79738E+01	.90068E+01
187	.71396E+01	.81022E+01	188	.64723E+01	.73785E+01
189	.58050E+01	.66548E+01	190	.52711E+01	.60758E+01
191	.47373E+01	.54969E+01	192	.43102E+01	.50337E+01
193	.38831E+01	.45705E+01	194	.14250E+02	.15000E+02
195	.11489E+02	.12130E+02	196	.92807E+01	.98336E+01
197	.75138E+01	.79967E+01	198	.61003E+01	.65271E+01
199	.49695E+01	.53515E+01	200	.40648E+01	.44110E+01
201	.15000E+02	.15000E+02	202	.13542E+02	.13542E+02
203	.12084E+02	.12084E+02	204	.10918E+02	.10918E+02
205	.97517E+01	.97517E+01	206	.88186E+01	.88186E+01
207	.78856E+01	.78856E+01	208	.71392E+01	.71392E+01
209	.63927E+01	.63927E+01	210	.57956E+01	.57956E+01
211	.51984E+01	.51984E+01	212	.47207E+01	.47207E+01
213	.42430E+01	.42430E+01	214	.15000E+02	.14250E+02
215	.12130E+02	.11489E+02	216	.98336E+01	.92807E+01
217	.79967E+01	.75138E+01	218	.65271E+01	.61003E+01
219	.53515E+01	.49695E+01	220	.44110E+01	.40648E+01
221	.15000E+02	.13500E+02	222	.13587E+02	.12197E+02
223	.12173E+02	.10893E+02	224	.11042E+02	.98506E+01
225	.99115E+01	.88079E+01	226	.90068E+01	.79738E+01
227	.81022E+01	.71396E+01	228	.73785E+01	.64723E+01
229	.66548E+01	.58050E+01	230	.60758E+01	.52711E+01
231	.54969E+01	.47373E+01	232	.50337E+01	.43102E+01
233	.45705E+01	.38831E+01	234	.15000E+02	.12750E+02
235	.12214E+02	.10296E+02	236	.99852E+01	.83334E+01
237	.82021E+01	.67631E+01	238	.67757E+01	.55068E+01
239	.56346E+01	.45018E+01	240	.47216E+01	.36978E+01
241	.15000E+02	.12000E+02	242	.13626E+02	.10849E+02
243	.12253E+02	.96984E+01	244	.11154E+02	.87778E+01
245	.10055E+02	.78572E+01	246	.91757E+01	.71207E+01
247	.82965E+01	.63842E+01	248	.75932E+01	.57950E+01
249	.68899E+01	.52058E+01	250	.63272E+01	.47344E+01
251	.57646E+01	.42631E+01	252	.53144E+01	.38860E+01
253	.48643E+01	.35089E+01	254	.15000E+02	.11250E+02
255	.12289E+02	.90996E+01	256	.10120E+02	.73792E+01
257	.83853E+01	.60029E+01	258	.69973E+01	.49019E+01
259	.58869E+01	.40211E+01	260	.49986E+01	.33164E+01
261	.15000E+02	.10500E+02	262	.13662E+02	.94999E+01
263	.12323E+02	.84997E+01	264	.11252E+02	.76996E+01
265	.10182E+02	.68995E+01	266	.93251E+01	.62594E+01
267	.84685E+01	.56193E+01	268	.77832E+01	.51072E+01
269	.70980E+01	.45952E+01	270	.65497E+01	.41855E+01
271	.60015E+01	.37759E+01	272	.55630E+01	.34481E+01
273	.51244E+01	.31204E+01	274	.15000E+02	.97500E+01
275	.12355E+02	.78989E+01	276	.10239E+02	.64180E+01
277	.85461E+01	.52333E+01	278	.71919E+01	.42856E+01
279	.61085E+01	.35273E+01	280	.52418E+01	.29208E+01
281	.15000E+02	.90000E+01	282	.13692E+02	.81486E+01
283	.12385E+02	.72971E+01	284	.11338E+02	.66160E+01
285	.10292E+02	.59348E+01	286	.94551E+01	.53899E+01
287	.86182E+01	.48450E+01	288	.79486E+01	.44090E+01
289	.72790E+01	.39731E+01	290	.67434E+01	.36243E+01
291	.62077E+01	.32756E+01	292	.57792E+01	.29966E+01
293	.53507E+01	.27176E+01	294	.15000E+02	.82500E+01
295	.12412E+02	.66944E+01	296	.10341E+02	.54498E+01
297	.86847E+01	.44542E+01	298	.73595E+01	.36577E+01
299	.62993E+01	.30205E+01	300	.54512E+01	.25108E+01
301	.15000E+02	.75000E+01	302	.13718E+02	.67953E+01
303	.12437E+02	.60906E+01	304	.11411E+02	.55269E+01
305	.10386E+02	.49631E+01	306	.95658E+01	.45121E+01
307	.87455E+01	.40611E+01	308	.80893E+01	.37003E+01
309	.74331E+01	.33395E+01	310	.69082E+01	.30509E+01
311	.63832E+01	.27623E+01	312	.59632E+01	.25313E+01
313	.55433E+01	.23004E+01	314	.15000E+02	.67500E+01

315	.12459E+02	.54859E+01	316	.10427E+02	.44747E+01
317	.88009E+01	.36657E+01	318	.75001E+01	.30185E+01
319	.64594E+01	.25007E+01	320	.56269E+01	.20865E+01
321	.15000E+02	.60000E+01	322	.13740E+02	.54401E+01
323	.12480E+02	.48803E+01	324	.11472E+02	.44324E+01
325	.10464E+02	.39845E+01	326	.96571E+01	.36262E+01
327	.88506E+01	.32678E+01	328	.82054E+01	.29812E+01
329	.75602E+01	.26945E+01	330	.70441E+01	.24652E+01
331	.65279E+01	.22359E+01	332	.61150E+01	.20524E+01
333	.57021E+01	.18690E+01	334	.15000E+02	.52500E+01
335	.12498E+02	.42736E+01	336	.10496E+02	.34925E+01
337	.88947E+01	.28676E+01	338	.76136E+01	.23677E+01
339	.65888E+01	.19678E+01	340	.57689E+01	.16479E+01
341	.15000E+02	.45000E+01	342	.13757E+02	.40830E+01
343	.12514E+02	.36660E+01	344	.11519E+02	.33324E+01
345	.10525E+02	.29988E+01	346	.97289E+01	.27320E+01
347	.89333E+01	.24651E+01	348	.82968E+01	.22516E+01
349	.76603E+01	.20381E+01	350	.71511E+01	.18673E+01
351	.66419E+01	.16965E+01	352	.62345E+01	.15598E+01
353	.58272E+01	.14232E+01	354	.15000E+02	.37500E+01
355	.12527E+02	.30574E+01	356	.10549E+02	.25034E+01
357	.89663E+01	.20601E+01	358	.77002E+01	.17056E+01
359	.66874E+01	.14219E+01	360	.58771E+01	.11949E+01
361	.15000E+02	.30000E+01	362	.13769E+02	.27239E+01
363	.12538E+02	[illegible]479E+01	364	.11554E+02	.22270E+01
365	.10569E+02	[illegible]62E+01	366	.97814E+01	.18295E+01
367	.89937E+01	.16529E+01	368	.83636E+01	.15115E+01
369	.77334E+01	.13702E+01	370	.72293E+01	.12571E+01
371	.67251E+01	.11440E+01	372	.63218E+01	.10536E+01
373	.59185E+01	.96311E+00	374	.15000E+02	.22500E+01
375	.12547E+02	.18374E+01	376	.10585E+02	.15073E+01
377	.90156E+01	.12432E+01	378	.77598E+01	.10319E+01
379	.67552E+01	.86291E+00	380	.59515E+01	.72770E+00
381	.15000E+02	.15000E+01	382	.13777E+02	.13629E+01
383	.12554E+02	.12259E+01	384	.11576E+02	.11162E+01
385	.10597E+02	.10066E+01	386	.98145E+01	.91888E+00
387	.90318E+01	.83116E+00	388	.84057E+01	.76099E+00
389	.77795E+01	.69081E+00	390	.72786E+01	.63467E+00
391	.67776E+01	.57854E+00	392	.63769E+01	.53363E+00
393	.59761E+01	.48871E+00	394	.15000E+02	.75000E+00
395	.12558E+02	.61343E+00	396	.10605E+02	.50417E+00
397	.90425E+01	.41676E+00	398	.77924E+01	.34684E+00
399	.67923E+01	.29090E+00	400	.59923E+01	.24615E+00
401	.15000E+02	.00000E+00	402	.13780E+02	.00000E+00
403	.12560E+02	.00000E+00	404	.11585E+02	.00000E+00
405	.10609E+02	.00000E+00	406	.98283E+01	.00000E+00
407	.90476E+01	.00000E+00	408	.84231E+01	.00000E+00
409	.77986E+01	.00000E+00	410	.72990E+01	.00000E+00
411	.67994E+01	.00000E+00	412	.63997E+01	.00000E+00
413	.60000E+01	.00000E+00	414	.39874E+01	.39874E+01
415	.36492E+01	.42952E+01	416	.32975E+01	.45713E+01
417	.29323E+01	.48157E+01	418	.25537E+01	.50284E+01
419	.21617E+01	.52094E+01	420	.17563E+01	.53586E+01
421	.13374E+01	.54762E+01	422	.90502E+00	.55620E+01
423	.45923E+00	.56162E+01	424	.00000E+00	.56386E+01
425	.37318E+01	.37318E+01	426	.35751E+01	.38796E+01
427	.34152E+01	.40199E+01	428	.32522E+01	.41528E+01
429	.30860E+01	.42783E+01	430	.29167E+01	.43964E+01
431	.27443E+01	.45071E+01	432	.25687E+01	.46103E+01
433	.23899E+01	.47061E+01	434	.22081E+01	.47945E+01
435	.20230E+01	.48755E+01	436	.18349E+01	.49491E+01
437	.16436E+01	.50152E+01	438	.14491E+01	.50739E+01
439	.12515E+01	.51252E+01	440	.10508E+01	.51691E+01
441	.84692E+00	.52056E+01	442	.63991E+00	.52346E+01
443	.42975E+00	.52562E+01	444	.21644E+00	.52704E+01
445	.00000E+00	.52772E+01	446	.35146E+01	.35146E+01
447	.32163E+01	.37859E+01	448	.29063E+01	.40293E+01
449	.25844E+01	.42447E+01	450	.22507E+01	.44322E+01
451	.19051E+01	.45917E+01	452	.15478E+01	.47233E+01
453	.11786E+01	.48269E+01	454	.79754E+00	.49025E+01
455	.40469E+00	.49503E+01	456	.00000E+00	.49700E+01
457	.32973E+01	.32973E+01	458	.31588E+01	.34279E+01
459	.30175E+01	.35519E+01	460	.28734E+01	.36693E+01
461	.27265E+01	.37802E+01	462	.25769E+01	.38846E+01
463	.24245E+01	.39823E+01	464	.22694E+01	.40736E+01
465	.21114E+01	.41582E+01	466	.19507E+01	.42363E+01
467	.17872E+01	.43079E+01	468	.16210E+01	.43729E+01
469	.14520E+01	.44313E+01	470	.12802E+01	.44832E+01
471	.11056E+01	.45286E+01	472	.92827E+00	.45673E+01

473	.74816E+00	.45995E+01	474	.56528E+00	.46252E+01
475	.37962E+00	.46443E+01	476	.19120E+00	.46568E+01
477	.00000E+00	.46628E+01	478	.31126E+01	.31126E+01
479	.28484E+01	.33530E+01	480	.25738E+01	.35685E+01
481	.22886E+01	.37593E+01	482	.19931E+01	.39254E+01
483	.16870E+01	.40667E+01	484	.13705E+01	.41832E+01
485	.10436E+01	.42750E+01	486	.70619E+00	.43420E+01
487	.35832E+00	.43842E+01	488	.00000E+00	.44017E+01
489	.29280E+01	.29280E+01	490	.28049E+01	.30439E+01
491	.26794E+01	.31540E+01	492	.25514E+01	.32584E+01
493	.24210E+01	.33568E+01	494	.22881E+01	.34495E+01
495	.21528E+01	.35363E+01	496	.20150E+01	.36173E+01
497	.18747E+01	.36925E+01	498	.17320E+01	.37619E+01
499	.15868E+01	.38254E+01	500	.14392E+01	.38832E+01
501	.12891E+01	.39351E+01	502	.11366E+01	.39811E+01
503	.98158E+00	.40214E+01	504	.82412E+00	.40558E+01
505	.66421E+00	.40844E+01	506	.50184E+00	.41072E+01
507	.33702E+00	.41242E+01	508	.16974E+00	.41353E+01
509	.00000E+00	.41406E+01	510	.27710E+01	.27710E+01
511	.25357E+01	.29850E+01	512	.22911E+01	.31769E+01
513	.20373E+01	.33468E+01	514	.17741E+01	.34946E+01
515	.15016E+01	.36204E+01	516	.12199E+01	.37241E+01
517	.92886E+00	.38058E+01	518	.62853E+00	.38655E+01
519	.31891E+00	.39031E+01	520	.00000E+00	.39186E+01
521	.26140E+01	.26140E+01	522	.25041E+01	.27176E+01
523	.23920E+01	.28159E+01	524	.22777E+01	.29090E+01
525	.21613E+01	.29970E+01	526	.20426E+01	.30797E+01
527	.19218E+01	.31572E+01	528	.17987E+01	.32296E+01
529	.16735E+01	.32967E+01	530	.15461E+01	.33586E+01
531	.14165E+01	.34154E+01	532	.12847E+01	.34669E+01
533	.11507E+01	.35132E+01	534	.10145E+01	.35544E+01
535	.87615E+00	.35903E+01	536	.73560E+00	.36210E+01
537	.59286E+00	.36466E+01	538	.44793E+00	.36669E+01
539	.30081E+00	.36820E+01	540	.15150E+00	.36920E+01
541	.00000E+00	.36967E+01	542	.24806E+01	.24806E+01
543	.22699E+01	.26722E+01	544	.20509E+01	.28440E+01
545	.18236E+01	.29961E+01	546	.15880E+01	.31285E+01
547	.13441E+01	.32411E+01	548	.10919E+01	.33339E+01
549	.83134E+00	.34071E+01	550	.56253E+00	.34605E+01
551	.28542E+00	.34941E+01	552	.00000E+00	.35081E+01
553	.23472E+01	.23472E+01	554	.22485E+01	.24402E+01
555	.21478E+01	.25285E+01	556	.20451E+01	.26121E+01
557	.19405E+01	.26911E+01	558	.18339E+01	.27654E+01
559	.17254E+01	.28350E+01	560	.16149E+01	.28999E+01
561	.15025E+01	.29602E+01	562	.13880E+01	.30158E+01
563	.12717E+01	.30668E+01	564	.11533E+01	.31131E+01
565	.10330E+01	.31547E+01	566	.91076E+00	.31916E+01
567	.78654E+00	.32239E+01	568	.66035E+00	.32515E+01
569	.53220E+00	.32744E+01	570	.40210E+00	.32926E+01
571	.27003E+00	.33062E+01	572	.13599E+00	.33152E+01
573	.00000E+00	.33194E+01	574	.22338E+01	.22338E+01
575	.20440E+01	.24063E+01	576	.18467E+01	.25611E+01
577	.16420E+01	.26980E+01	578	.14298E+01	.28172E+01
579	.12101E+01	.29186E+01	580	.98302E+00	.30023E+01
581	.74845E+00	.30681E+01	582	.50643E+00	.31162E+01
583	.25694E+00	.31465E+01	584	.00000E+00	.31590E+01
585	.21204E+01	.21204E+01	586	.20311E+01	.22044E+01
587	.19402E+01	.22841E+01	588	.18474E+01	.23597E+01
589	.17529E+01	.24311E+01	590	.16566E+01	.24982E+01
591	.15585E+01	.25611E+01	592	.14587E+01	.26198E+01
593	.13571E+01	.26742E+01	594	.12537E+01	.27245E+01
595	.11486E+01	.27705E+01	596	.10417E+01	.28123E+01
597	.93301E+00	.28499E+01	598	.82257E+00	.28833E+01
599	.71037E+00	.29124E+01	600	.59639E+00	.29373E+01
601	.48065E+00	.29580E+01	602	.36314E+00	.29745E+01
603	.24386E+00	.29868E+01	604	.12281E+00	.29949E+01
605	.00000E+00	.29987E+01	606	.20240E+01	.20240E+01
607	.18519E+01	.21803E+01	608	.16731E+01	.23205E+01
609	.14876E+01	.24447E+01	610	.12953E+01	.25527E+01
611	.10963E+01	.26446E+01	612	.89051E+00	.27204E+01
613	.67799E+00	.27800E+01	614	.45874E+00	.28236E+01
615	.23274E+00	.28510E+01	616	.00000E+00	.28624E+01
617	.19276E+01	.19276E+01	618	.18464E+01	.20039E+01
619	.17637E+01	.20765E+01	620	.16793E+01	.21452E+01
621	.15934E+01	.22100E+01	622	.15058E+01	.22711E+01
623	.14166E+01	.23283E+01	624	.13259E+01	.23816E+01
625	.12335E+01	.24311E+01	626	.11395E+01	.24768E+01
627	.10440E+01	.25186E+01	628	.94678E+00	.25567E+01
629	.84800E+00	.25908E+01	630	.74761E+00	.26212E+01

631	.64562E+00	.26477E+01	632	.54203E+00	.26703E+01
633	.43683E+00	.26891E+01	634	.33003E+00	.27041E+01
635	.22162E+00	.27153E+01	636	.11161E+00	.27226E+01
637	.00000E+00	.27261E+01	638	.18456E+01	.18456E+01
639	.16887E+01	.19882E+01	640	.15256E+01	.21161E+01
641	.13564E+01	.22293E+01	642	.11810E+01	.23278E+01
643	.99950E+00	.24116E+01	644	.81187E+00	.24807E+01
645	.61810E+00	.25351E+01	646	.41820E+00	.25749E+01
647	.21217E+00	.25999E+01	648	.00000E+00	.26102E+01
649	.17637E+01	.17637E+01	650	.16894E+01	.18336E+01
651	.16137E+01	.19000E+01	652	.15365E+01	.19628E+01
653	.14578E+01	.20222E+01	654	.13777E+01	.20780E+01
655	.12961E+01	.21304E+01	656	.12130E+01	.21792E+01
657	.11285E+01	.22245E+01	658	.10425E+01	.22663E+01
659	.95504E+00	.23046E+01	660	.86612E+00	.23394E+01
661	.77574E+00	.23706E+01	662	.68390E+00	.23984E+01
663	.59059E+00	.24226E+01	664	.49582E+00	.24434E+01
665	.39958E+00	.24606E+01	666	.30188E+00	.24743E+01
667	.20272E+00	.24845E+01	668	.10209E+00	.24912E+01
669	.00000E+00	.24944E+01	670	.16940E+01	.16940E+01
671	.15499E+01	.18249E+01	672	.14002E+01	.19423E+01
673	.12448E+01	.20463E+01	674	.10838E+01	.21367E+01
675	.91724E+00	.22136E+01	676	.74503E+00	.22770E+01
677	.56720E+00	.23270E+01	678	.38375E+00	.23634E+01
679	.19468E+00	.23864E+01	680	.00000E+00	.23959E+01
681	.16244E+01	.16244E+01	682	.15560E+01	.16888E+01
683	.14862E+01	.17499E+01	684	.14150E+01	.18078E+01
685	.13426E+01	.18625E+01	686	.12687E+01	.19139E+01
687	.11936E+01	.19621E+01	688	.11171E+01	.20071E+01
689	.10392E+01	.20489E+01	690	.96000E+00	.20874E+01
691	.87945E+00	.21226E+01	692	.79756E+00	.21547E+01
693	.71432E+00	.21835E+01	694	.62974E+00	.22090E+01
695	.54381E+00	.22314E+01	696	.45654E+00	.22504E+01
697	.36792E+00	.22663E+01	698	.27796E+00	.22789E+01
699	.18665E+00	.22883E+01	700	.93997E-01	.22945E+01
701	.00000E+00	.22974E+01	702	.15652E+01	.15652E+01
703	.14320E+01	.16862E+01	704	.12936E+01	.17946E+01
705	.11500E+01	.18907E+01	706	.10013E+01	.19742E+01
707	.84732E+00	.20453E+01	708	.68822E+00	.21039E+01
709	.52393E+00	.21501E+01	710	.35446E+00	.21837E+01
711	.17982E+00	.22050E+01	712	.00000E+00	.22137E+01
713	.15060E+01	.15060E+01	714	.14425E+01	.15657E+01
715	.13778E+01	.16224E+01	716	.13118E+01	.16761E+01
717	.12446E+01	.17268E+01	718	.11761E+01	.17745E+01
719	.11064E+01	.18192E+01	720	.10355E+01	.18609E+01
721	.96331E+00	.18996E+01	722	.88988E+00	.19353E+01
723	.81520E+00	.19680E+01	724	.73928E+00	.19977E+01
725	.66211E+00	.20244E+01	726	.58370E+00	.20481E+01
727	.50405E+00	.20688E+01	728	.42315E+00	.20865E+01
729	.34101E+00	.21012E+01	730	.25762E+00	.21129E+01
731	.17299E+00	.21216E+01	732	.87118E-01	.21273E+01
733	.00000E+00	.21300E+01	734	.56386E+01	.00000E+00
735	.56162E+01	.45923E+00	736	.55620E+01	.90502E+00
737	.54762E+01	.13374E+01	738	.53586E+01	.17563E+01
739	.52094E+01	.21617E+01	740	.50284E+01	.25537E+01
741	.48157E+01	.29323E+01	742	.45713E+01	.32975E+01
743	.42952E+01	.36492E+01	744	.52772E+01	.00000E+00
745	.52704E+01	.21644E+00	746	.52562E+01	.42975E+00
747	.52346E+01	.63991E+00	748	.52056E+01	.84692E+00
749	.51691E+01	.10508E+01	750	.51252E+01	.12515E+01
751	.50739E+01	.14491E+01	752	.50152E+01	.16436E+01
753	.49491E+01	.18349E+01	754	.48755E+01	.20230E+01
755	.47945E+01	.22081E+01	756	.47061E+01	.23899E+01
757	.46103E+01	.25687E+01	758	.45071E+01	.27443E+01
759	.43964E+01	.29167E+01	760	.42783E+01	.30860E+01
761	.41528E+01	.32522E+01	762	.40199E+01	.34152E+01
763	.38796E+01	.35751E+01	764	.49700E+01	.00000E+00
765	.49503E+01	.40469E+00	766	.49025E+01	.79754E+00
767	.48269E+01	.11786E+01	768	.47233E+01	.15478E+01
769	.45917E+01	.19051E+01	770	.44322E+01	.22507E+01
771	.42447E+01	.25844E+01	772	.40293E+01	.29063E+01
773	.37859E+01	.32163E+01	774	.46628E+01	.00000E+00
775	.46568E+01	.19120E+00	776	.46443E+01	.37962E+00
777	.46252E+01	.56528E+00	778	.45995E+01	.74816E+00
779	.45673E+01	.92827E+00	780	.45286E+01	.11056E+01
781	.44832E+01	.12802E+01	782	.44313E+01	.14520E+01
783	.43729E+01	.16210E+01	784	.43079E+01	.17872E+01
785	.42363E+01	.19507E+01	786	.41582E+01	.21114E+01
787	.40736E+01	.22694E+01	788	.39823E+01	.24245E+01

789	.38846E+01	.25769E+01	790	.37802E+01	.27265E+01
791	.36693E+01	.28734E+01	792	.35519E+01	.30175E+01
793	.34279E+01	.31588E+01	794	.44017E+01	.00000E+00
795	.43842E+01	.35832E+00	796	.43420E+01	.70619E+00
797	.42750E+01	.10436E+01	798	.41832E+01	.13705E+01
799	.40667E+01	.16870E+01	800	.39254E+01	.19931E+01
801	.37593E+01	.22886E+01	802	.35685E+01	.25738E+01
803	.33530E+01	.28484E+01	804	.41406E+01	.00000E+00
805	.41353E+01	.16974E+00	806	.41242E+01	.33702E+00
807	.41072E+01	.50184E+00	808	.40844E+01	.66421E+00
809	.40558E+01	.82412E+00	810	.40214E+01	.98158E+00
811	.39811E+01	.11366E+01	812	.39351E+01	.12891E+01
813	.38832E+01	.14392E+01	814	.38254E+01	.15868E+01
815	.37619E+01	.17320E+01	816	.36925E+01	.18747E+01
817	.36173E+01	.20150E+01	818	.35363E+01	.21528E+01
819	.34495E+01	.22881E+01	820	.33568E+01	.24210E+01
821	.32584E+01	.25514E+01	822	.31540E+01	.26794E+01
823	.30439E+01	.28049E+01	824	.39186E+01	.00000E+00
825	.39031E+01	.31891E+00	826	.38655E+01	.62853E+00
827	.38058E+01	.92886E+00	828	.37241E+01	.12199E+01
829	.36204E+01	.15016E+01	830	.34946E+01	.17741E+01
831	.33468E+01	.20573E+01	832	.31769E+01	.22911E+01
833	.29850E+01	.25357E+01	834	.36967E+01	.00000E+00
835	.36920E+01	.15150E+00	836	.36820E+01	.30081E+00
837	.36669E+01	.44793E+00	838	.36466E+01	.59286E+00
839	.36210E+01	.73560E+00	840	.35903E+01	.87615E+00
841	.35544E+01	.10145E+01	842	.35132E+01	.11507E+01
843	.34669E+01	.12847E+01	844	.34154E+01	.14165E+01
845	.33586E+01	.15461E+01	846	.32967E+01	.16735E+01
847	.32296E+01	.17987E+01	848	.31572E+01	.19218E+01
849	.30797E+01	.20426E+01	850	.29970E+01	.21613E+01
851	.29090E+01	.22777E+01	852	.28159E+01	.23920E+01
853	.27176E+01	.25041E+01	854	.35081E+01	.00000E+00
855	.34941E+01	.28542E+00	856	.34605E+01	.56253E+00
857	.34071E+01	.83134E+00	858	.33339E+01	.10919E+01
859	.32411E+01	.13441E+01	860	.31285E+01	.15880E+01
861	.29961E+01	.18236E+01	862	.28440E+01	.20509E+01
863	.26722E+01	.22699E+01	864	.33194E+01	.00000E+00
865	.33152E+01	.13599E+00	866	.33062E+01	.27003E+00
867	.32926E+01	.40710E+00	868	.32744E+01	.53220E+00
869	.32515E+01	.66035E+00	870	.32239E+01	.78654E+00
871	.31916E+01	.91076E+00	872	.31547E+01	.10330E+01
873	.31131E+01	.11533E+01	874	.30668E+01	.12717E+01
875	.30158E+01	.13880E+01	876	.29602E+01	.15025E+01
877	.28999E+01	.16149E+01	878	.28350E+01	.17254E+01
879	.27654E+01	.18339E+01	880	.26911E+01	.19405E+01
881	.26121E+01	.20451E+01	882	.25285E+01	.21478E+01
883	.24402E+01	.22485E+01	884	.31590E+01	.00000E+00
885	.31465E+01	.25694E+00	886	.31162E+01	.50643E+00
887	.30681E+01	.74845E+00	888	.30023E+01	.98302E+00
889	.29186E+01	.12101E+01	890	.28172E+01	.14298E+01
891	.26980E+01	.16420E+01	892	.25611E+01	.18467E+01
893	.24063E+01	.20440E+01	894	.29987E+01	.00000E+00
895	.29949E+01	.12281E+00	896	.29868E+01	.24386E+00
897	.29745E+01	.36314E+00	898	.29580E+01	.48065E+00
899	.29373E+01	.59639E+00	900	.29124E+01	.71037E+00
901	.28833E+01	.82257E+00	902	.28499E+01	.93301E+00
903	.28123E+01	.10417E+01	904	.27705E+01	.11486E+01
905	.27245E+01	.12537E+01	906	.26742E+01	.13571E+01
907	.26198E+01	.14587E+01	908	.25611E+01	.15585E+01
909	.24982E+01	.16566E+01	910	.24310E+01	.17529E+01
911	.23597E+01	.18474E+01	912	.22841E+01	.19402E+01
913	.22044E+01	.20311E+01	914	.28624E+01	.00000E+00
915	.28510E+01	.23274E+00	916	.28236E+01	.45874E+00
917	.27800E+01	.67799E+00	918	.27204E+01	.89051E+00
919	.26446E+01	.10963E+01	920	.25527E+01	.12953E+01
921	.24447E+01	.14876E+01	922	.23205E+01	.16731E+01
923	.21803E+01	.18519E+01	924	.27261E+01	.00000E+00
925	.27226E+01	.11161E+00	926	.27153E+01	.22162E+00
927	.27041E+01	.33003E+00	928	.26891E+01	.43683E+00
929	.26703E+01	.54203E+00	930	.26477E+01	.64562E+00
931	.26212E+01	.74761E+00	932	.25908E+01	.84800E+00
933	.25567E+01	.94678E+00	934	.25186E+01	.10440E+01
935	.24768E+01	.11395E+01	936	.24311E+01	.12335E+01
937	.23816E+01	.13259E+01	938	.23283E+01	.14166E+01
939	.22711E+01	.15058E+01	940	.22100E+01	.15934E+01
941	.21452E+01	.16793E+01	942	.20765E+01	.17637E+01
943	.20039E+01	.18464E+01	944	.26102E+01	.00000E+00
945	.25999E+01	.21217E+00	946	.25749E+01	.41820E+00

947	.25351E+01	.61810E+00	948	.24807E+01	.81187E+00
949	.24116E+01	.99950E+00	950	.23278E+01	.11810E+01
951	.22293E+01	.13564E+01	952	.21161E+01	.15256E+01
953	.19882E+01	.16887E+01	954	.24944E+01	.00000E+00
955	.24912E+01	.10209E+00	956	.24845E+01	.20272E+00
957	.24743E+01	.30188E+00	958	.24606E+01	.39958E+00
959	.24434E+01	.49582E+00	960	.24226E+01	.59059E+00
961	.23984E+01	.68390E+00	962	.23706E+01	.77574E+00
963	.23394E+01	.86612E+00	964	.23046E+01	.95504E+00
965	.22663E+01	.10425E+01	966	.22245E+01	.11285E+01
967	.21792E+01	.12130E+01	968	.21304E+01	.12961E+01
969	.20780E+01	.13777E+01	970	.20222E+01	.14578E+01
971	.19628E+01	.15365E+01	972	.19000E+01	.16137E+01
973	.18336E+01	.16894E+01	974	.23959E+01	.00000E+00
975	.23864E+01	.19468E+00	976	.23634E+01	.38375E+00
977	.23270E+01	.56720E+00	978	.22770E+01	.74503E+00
979	.22136E+01	.91724E+00	980	.21367E+01	.10838E+01
981	.20463E+01	.12448E+01	982	.19423E+01	.14002E+01
983	.18249E+01	.15499E+01	984	.22974E+01	.00000E+00
985	.22945E+01	.93997E-01	986	.22883E+01	.18665E+00
987	.22789E+01	.27796E+00	988	.22663E+01	.36792E+00
989	.22504E+01	.45654E+00	990	.22314E+01	.54381E+00
991	.22090E+01	.62974E+00	992	.21835E+01	.71432E+00
993	.21547E+01	.79756E+00	994	.21226E+01	.87945E+00
995	.20874E+01	.96000E+00	996	.20489E+01	.10392E+01
997	.20071E+01	.11171E+01	998	.19621E+01	.11936E+01
999	.19139E+01	.12687E+01	1000	.18625E+01	.13426E+01
1001	.18078E+01	.14150E+01	1002	.17499E+01	.14862E+01
1003	.16888E+01	.15560E+01	1004	.22137E+01	.00000E+00
1005	.22050E+01	.17982E+00	1006	.21837E+01	.35446E+00
1007	.21501E+01	.52393E+00	1008	.21039E+01	.68822E+00
1009	.20453E+01	.84732E+00	1010	.19742E+01	.10013E+01
1011	.18907E+01	.11500E+01	1012	.17946E+01	.12936E+01
1013	.16862E+01	.14320E+01	1014	.21300E+01	.00000E+00
1015	.21273E+01	.87118E-01	1016	.21216E+01	.17299E+00
1017	.21129E+01	.25762E+00	1018	.21012E+01	.34101E+00
1019	.20865E+01	.42315E+00	1020	.20688E+01	.50405E+00
1021	.20481E+01	.58370E+00	1022	.20244E+01	.66211E+00
1023	.19977E+01	.73928E+00	1024	.19680E+01	.81520E+00
1025	.19353E+01	.88988E+00	1026	.18996E+01	.96331E+00
1027	.18609E+01	.10355E+01	1028	.18192E+01	.11064E+01
1029	.17745E+01	.11761E+01	1030	.17268E+01	.12446E+01
1031	.16761E+01	.13118E+01	1032	.16224E+01	.13778E+01
1033	.15657E+01	.14425E+01	1034	.14707E+01	.14707E+01
1035	.13455E+01	.15843E+01	1036	.12154E+01	.16862E+01
1037	.10805E+01	.17764E+01	1038	.94075E+00	.18550E+01
1039	.79611E+00	.19217E+01	1040	.64661E+00	.19768E+01
1041	.49225E+00	.20202E+01	1042	.33303E+00	.20518E+01
1043	.16895E+00	.20718E+01	1044	.00000E+00	.20800E+01
1045	.14353E+01	.14353E+01	1046	.13748E+01	.14922E+01
1047	.13132E+01	.15462E+01	1048	.12503E+01	.15974E+01
1049	.11863E+01	.16457E+01	1050	.11210E+01	.16911E+01
1051	.10546E+01	.17337E+01	1052	.98698E+00	.17735E+01
1053	.91818E+00	.18103E+01	1054	.84820E+00	.18444E+01
1055	.77703E+00	.18755E+01	1056	.70467E+00	.19038E+01
1057	.63112E+00	.19293E+01	1058	.55638E+00	.19519E+01
1059	.48046E+00	.19716E+01	1060	.40335E+00	.19885E+01
1061	.32506E+00	.20025E+01	1062	.24557E+00	.20137E+01
1063	.16490E+00	.20220E+01	1064	.83045E-01	.20274E+01
1065	.00000E-00	.20300E+01	1066	.14000E+01	.14000E+01
1067	.12809E+01	.15082E+01	1068	.11571E+01	.16052E+01
1069	.10287E+01	.16910E+01	1070	.89562E+00	.17657E+01
1071	.75794E+00	.18293E+01	1072	.61562E+00	.18817E+01
1073	.46867E+00	.19230E+01	1074	.31708E+00	.19532E+01
1075	.16086E+00	.19722E+01	1076	.00000E+00	.19800E+01
1077	.13647E+01	.13647E+01	1078	.13072E+01	.14187E+01
1079	.12485E+01	.14701E+01	1080	.11888E+01	.15187E+01
1081	.11279E+01	.15646E+01	1082	.10659E+01	.16078E+01
1083	.10027E+01	.16483E+01	1084	.93847E+00	.16861E+01
1085	.87306E+00	.17211E+01	1086	.80652E+00	.17535E+01
1087	.73885E+00	.17831E+01	1088	.67005E+00	.18100E+01
1089	.60012E+00	.18342E+01	1090	.52907E+00	.18557E+01
1091	.45688E+00	.18744E+01	1092	.38356E+00	.18905E+01
1093	.30911E+00	.19038E+01	1094	.23352E+00	.19144E+01
1095	.15681E+00	.19223E+01	1096	.78972E-01	.19275E+01
1097	.00000E+00	.19300E+01	1098	.13293E+01	.13293E+01
1099	.12162E+01	.14320E+01	1100	.10987E+01	.15241E+01
1101	.97682E+00	.16056E+01	1102	.85049E+00	.16765E+01
1103	.71977E+00	.17369E+01	1104	.58463E+00	.17867E+01

1105	.44508E+00	.18259E+01	1106	.30113E+00	.18545E+01
1107	.15277E+00	.18725E+01	1108	.00000E+00	.18800E+01
1109	.12940E+01	.12940E+01	1110	.12395E+01	.13452E+01
1111	.11839E+01	.13939E+01	1112	.11273E+01	.14400E+01
1113	.10696E+01	.14835E+01	1114	.10108E+01	.15245E+01
1115	.95089E+00	.15629E+01	1116	.88995E+00	.15987E+01
1117	.82793E+00	.16319E+01	1118	.76484E+00	.16626E+01
1119	.70068E+00	.16907E+01	1120	.63544E+00	.17162E+01
1121	.56913E+00	.17391E+01	1122	.50175E+00	.17595E+01
1123	.43329E+00	.17773E+01	1124	.36376E+00	.17925E+01
1125	.29315E+00	.18051E+01	1126	.22148E+00	.18152E+01
1127	.14872E+00	.18227E+01	1128	.74899E-01	.18276E+01
1129	.00000E+00	.18300E+01	1130	.20800E+01	.00000E+00
1131	.20718E+01	.16895E+00	1132	.20518E+01	.33303E+00
1133	.20202E+01	.49225E+00	1134	.19768E+01	.64661E+00
1135	.19217E+01	.79611E+00	1136	.18550E+01	.94075E+00
1137	.17764E+01	.10805E+01	1138	.16862E+01	.12154E+01
1139	.15843E+01	.13455E+01	1140	.20300E+01	.00000E+00
1141	.20274E+01	.83045E-01	1142	.20220E+01	.16490E+00
1143	.20137E+01	.24557E+00	1144	.20025E+01	.32506E+00
1145	.19885E+01	.40335E+00	1146	.19716E+01	.48046E+00
1147	.19519E+01	.55638E+00	1148	.19293E+01	.63112E+00
1149	.19038E+01	.70467E+00	1150	.18755E+01	.77703E+00
1151	.18444E+01	.84820E+00	1152	.18103E+01	.91818E+00
1153	.17735E+01	.98698E+00	1154	.17337E+01	.10546E+01
1155	.16911E+01	.11210E+01	1156	.16457E+01	.11863E+01
1157	.15974E+01	.12503E+01	1158	.15462E+01	.13132E+01
1159	.14922E+01	.13748E+01	1160	.19800E+01	.00000E+00
1161	.19722E+01	.16086E+00	1162	.19532E+01	.31708E+00
1163	.19230E+01	.46867E+00	1164	.18817E+01	.61562E+00
1165	.18293E+01	.75794E+00	1166	.17657E+01	.89562E+00
1167	.16910E+01	.10287E+01	1168	.16052E+01	.11571E+01
1169	.15082E+01	.12809E+01	1170	.19300E+01	.00000E+00
1171	.19275E+01	.78972E-01	1172	.19223E+01	.15681E+00
1173	.19144E+01	.23352E+00	1174	.19038E+01	.30911E+00
1175	.18905E+01	.38356E+00	1176	.18744E+01	.45688E+00
1177	.18557E+01	.52907E+00	1178	.18342E+01	.60012E+00
1179	.18100E+01	.67005E+00	1180	.17831E+01	.73885E+00
1181	.17535E+01	.80652E+00	1182	.17211E+01	.87306E+00
1183	.16861E+01	.93847E+00	1184	.16483E+01	.10027E+01
1185	.16078E+01	.10659E+01	1186	.15646E+01	.11279E+01
1187	.15187E+01	.11888E+01	1188	.14701E+01	.12485E+01
1189	.14187E+01	.13072E+01	1190	.18800E+01	.00000E+00
1191	.18725E+01	.15277E+00	1192	.18545E+01	.30113E+00
1193	.18259E+01	.44508E+00	1194	.17867E+01	.58463E+00
1195	.17369E+01	.71977E+00	1196	.16765E+01	.85049E+00
1197	.16056E+01	.97682E+00	1198	.15241E+01	.10987E+01
1199	.14320E+01	.12162E+01	1200	.18300E+01	.00000E+00
1201	.18276E+01	.74899E-01	1202	.18227E+01	.14872E+00
1203	.18152E+01	.22148E+00	1204	.18051E+01	.29315E+00
1205	.17925E+01	.36376E+00	1206	.17773E+01	.43329E+00
1207	.17595E+01	.50175E+00	1208	.17391E+01	.56913E+00
1209	.17162E+01	.63544E+00	1210	.16907E+01	.70068E+00
1211	.16626E+01	.76484E+00	1212	.16319E+01	.82793E+00
1213	.15987E+01	.88995E+00	1214	.15629E+01	.95089E+00
1215	.15245E+01	.10108E+01	1216	.14835E+01	.10696E+01
1217	.14400E+01	.11273E+01	1218	.13939E+01	.11839E+01
1219	.13452E+01	.12395E+01			

Node Restraints (Code: 10- X dir. 1- Y dir. 11- Both)

Node	Code	Fixed Values(X,Y)	
1	10	.00000	.00000
2	10	.00000	.00000
3	10	.00000	.00000
4	10	.00000	.00000
5	10	.00000	.00000
6	10	.00000	.00000
7	10	.00000	.00000
8	10	.00000	.00000
9	10	.00000	.00000
10	10	.00000	.00000
11	10	.00000	.00000
12	10	.00000	.00000
13	10	.00000	.00000
424	10	.00000	.00000
445	10	.00000	.00000
456	10	.00000	.00000
477	10	.00000	.00000
488	10	.00000	.00000

509	10	.00000	.00000
520	10	.00000	.00000
541	10	.00000	.00000
552	10	.00000	.00000
573	10	.00000	.00000
584	10	.00000	.00000
605	10	.00000	.00000
616	10	.00000	.00000
637	10	.00000	.00000
648	10	.00000	.00000
669	10	.00000	.00000
680	10	.00000	.00000
701	10	.00000	.00000
712	10	.00000	.00000
733	10	.00000	.00000
1044	10	.00000	.00000
1065	10	.00000	.00000
1076	10	.00000	.00000
1097	10	.00000	.00000
1108	10	.00000	.00000
1129	10	.00000	.00000
1200	1	.00000	.00000
1190	1	.00000	.00000
1170	1	.00000	.00000
1160	1	.00000	.00000
1140	1	.00000	.00000
1130	1	.00000	.00000
1014	1	.00000	.00000
1004	1	.00000	.00000
984	1	.00000	.00000
974	1	.00000	.00000
954	1	.00000	.00000
944	1	.00000	.00000
924	1	.00000	.00000
914	1	.00000	.00000
894	1	.00000	.00000
884	1	.00000	.00000
864	1	.00000	.00000
854	1	.00000	.00000
834	1	.00000	.00000
824	1	.00000	.00000
804	1	.00000	.00000
794	1	.00000	.00000
774	1	.00000	.00000
764	1	.00000	.00000
744	1	.00000	.00000
734	1	.00000	.00000
413	1	.00000	.00000
412	1	.00000	.00000
411	1	.00000	.00000
410	1	.00000	.00000
409	1	.00000	.00000
408	1	.00000	.00000
407	1	.00000	.00000
406	1	.00000	.00000
405	1	.00000	.00000
404	1	.00000	.00000
403	1	.00000	.00000
402	1	.00000	.00000
401	1	.00000	.00000

Material Properties

Material Number 1
MODEL--Elastic

Elastic Modulus	= .1520E+05
Modulus Coefficient Ed	= .0000E+00
Poisson Ratio	= .2200E+00
Mass Density	= .0000E+00
Thermal Coefficient	= .0000E+00

Material Number 2
MODEL--Elastic

Elastic Modulus	= .2800E+05
Modulus Coefficient Ed	= .0000E+00
Poisson Ratio	= .1500E+00
Mass Density	= .0000E+00
Thermal Coefficient	= .0000E+00

```
Memory Management:
------------------
Maximum Frontwidth          : 132
Number of Equations in core :2438

Storage Requirements:
Real Storage Required                =      124675
Real Storage allowed                 =      200000
Stiffness Matrix Storage Required    =      321316
Stiffness Matrix allowed             =      600000
Integer Storage Required             =       13724
Integer Storage Specified            =       50000
```

fine mesh

No. of Edges with Distributed Loads = 20

Element	Node	Normal Force	Tang. Force
115	401	.7530E+01	.0000E+00
	394	.7530E+01	.0000E+00
	381	.7530E+01	.0000E+00
109	381	.7530E+01	.0000E+00
	374	.7530E+01	.0000E+00
	361	.7530E+01	.0000E+00
103	361	.7530E+01	.0000E+00
	354	.7530E+01	.0000E+00
	341	.7530E+01	.0000E+00
97	341	.7530E+01	.0000E+00
	334	.7530E+01	.0000E+00
	321	.7530E+01	.0000E+00
91	321	.7530E+01	.0000E+00
	314	.7530E+01	.0000E+00
	301	.7530E+01	.0000E+00
85	301	.7530E+01	.0000E+00
	294	.7530E+01	.0000E+00
	281	.7530E+01	.0000E+00
79	281	.7530E+01	.0000E+00
	274	.7530E+01	.0000E+00
	261	.7530E+01	.0000E+00
73	261	.7530E+01	.0000E+00
	254	.7530E+01	.0000E+00
	241	.7530E+01	.0000E+00
67	241	.7530E+01	.0000E+00
	234	.7530E+01	.0000E+00
	221	.7530E+01	.0000E+00
61	221	.7530E+01	.0000E+00
	214	.7530E+01	.0000E+00
	201	.7530E+01	.0000E+00
55	201	.2830E+01	.0000E+00
	194	.2830E+01	.0000E+00
	181	.2830E+01	.0000E+00
49	181	.2830E+01	.0000E+00
	174	.2830E+01	.0000E+00
	161	.2830E+01	.0000E+00
43	161	.2830E+01	.0000E+00
	154	.2830E+01	.0000E+00
	141	.2830E+01	.0000E+00
37	141	.2830E+01	.0000E+00
	134	.2830E+01	.0000E+00
	121	.2830E+01	.0000E+00
31	121	.2830E+01	.0000E+00
	114	.2830E+01	.0000E+00
	101	.2830E+01	.0000E+00
25	101	.2830E+01	.0000E+00
	94	.2830E+01	.0000E+00
	81	.2830E+01	.0000E+00
19	81	.2830E+01	.0000E+00
	74	.2830E+01	.0000E+00
	61	.2830E+01	.0000E+00
13	61	.2830E+01	.0000E+00
	54	.2830E+01	.0000E+00
	41	.2830E+01	.0000E+00
7	41	.2830E+01	.0000E+00
	34	.2830E+01	.0000E+00
	21	.2830E+01	.0000E+00
1	21	.2830E+01	.0000E+00
	14	.2830E+01	.0000E+00
	1	.2830E+01	.0000E+00

```
    Time Stepping Parameter        =       .000
    Time Step Stability Factor     =     .00000
    Time Step Increment Parameter  =   .000E+00
    Initial Time Step Length       =   .411E-04

*** INCREMENT NUMBER      1 ***
    Load Factor                =      .10000E+01
    Convergence Tolerance      =      .00000E+00
    Increment Time Interval    =      .00000E+00
    Max. No. of Iterations     =               1


Convergence Code
     1 = Approaching Steady State
     0 = Steady State
   999 = Not Approaching Steady State
Norm of Residual Sum =
     ( Sum of the Absolute Values of the Strain Increments for a Time ) /
     (Sum of the Strain Increment Absolute Values at the First Time Step)


         IGAMMA =     0
          This Indicates That Only Elastic Analysis is Required

    Displacements
     Node        X-Disp.        Y-Disp.        Node        X-Disp.        Y-Disp.
       1    .000000E+00   -.549326E-03        401   -.667333E-02    .000000E+00
     733    .000000E+00    .660256E-04       1014   -.212560E-02    .000000E+00
    1065    .000000E+00    .614542E-04       1097    .000000E+00    .524331E-04
    1129    .000000E+00    .371306E-04       1140   -.212592E-02    .000000E+00
    1170   -.212703E-02    .000000E+00       1200   -.212828E-02    .000000E+00

XX-Stress YY-Stress XY-Stress ZZ-Stress  Max P.S.  Min P.S. Ang. E.P.St'n. E.Str.
Element No. =     1    (@ gauss pts. 1-4)
-.745E+01 -.283E+01 -.141E-02 -.226E+01 -.283E+01 -.745E+01   0 .00E+00 .49E+01
-.746E+01 -.283E+01 -.493E-02 -.226E+01 -.283E+01 -.746E+01   0 .00E+00 .49E+01
-.754E+01 -.284E+01 -.371E-02 -.229E+01 -.284E+01 -.754E+01   0 .00E+00 .50E+01
-.755E+01 -.284E+01 -.133E-01 -.229E+01 -.284E+01 -.755E+01   0 .00E+00 .50E+01
Element No. =     2    (@ gauss pts. 1-4)
-.759E+01 -.286E+01 -.426E-02 -.230E+01 -.286E+01 -.759E+01   0 .00E+00 .50E+01
-.759E+01 -.286E+01 -.151E-01 -.230E+01 -.286E+01 -.759E+01   0 .00E+00 .50E+01
-.765E+01 -.288E+01 -.487E-02 -.232E+01 -.288E+01 -.765E+01   0 .00E+00 .51E+01
-.765E+01 -.288E+01 -.176E-01 -.232E+01 -.288E+01 -.765E+01   0 .00E+00 .51E+01
Element No. =     3    (@ gauss pts. 1-4)
-.769E+01 -.290E+01 -.530E-02 -.233E+01 -.290E+01 -.769E+01   0 .00E+00 .51E+01
-.769E+01 -.289E+01 -.191E-01 -.233E+01 -.289E+01 -.769E+01   0 .00E+00 .51E+01
-.774E+01 -.292E+01 -.593E-02 -.235E+01 -.292E+01 -.774E+01   0 .00E+00 .51E+01
-.774E+01 -.292E+01 -.215E-01 -.235E+01 -.292E+01 -.774E+01   0 .00E+00 .51E+01
Element No. =     4    (@ gauss pts. 1-4)
-.778E+01 -.294E+01 -.648E-02 -.236E+01 - 294E+01 -.778E+01   0 .00E+00 .52E+01
-.778E+01 -.294E+01 -.234E-01 -.236E+01 -.294E+01 -.778E+01   0 .00E+00 .52E+01
-.783E+01 -.298E+01 -.725E-02 -.238E+01 -.298E+01 -.783E+01   0 .00E+00 .52E+01
-.784E+01 -.297E+01 -.263E-01 -.238E+01 -.297E+01 -.784E+01   0 .00E+00 .52E+01
Element No. =     5    (@ gauss pts. 1-4)
-.788E+01 -.300E+01 -.787E-02 -.239E+01 -.300E+01 -.788E+01   0 .00E+00 .52E+01
-.788E+01 -.299E+01 -.285E-01 -.239E+01 -.299E+01 -.788E+01   0 .00E+00 .52E+01
-.793E+01 -.303E+01 -.872E-02 -.241E+01 -.303E+01 -.793E+01   0 .00E+00 .52E+01
-.794E+01 -.303E+01 -.317E-01 -.241E+01 -.303E+01 -.794E+01   0 .00E+00 .52E+01
Element No. =     6    (@ gauss pts. 1-4)
-.798E+01 -.306E+01 -.937E-02 -.243E+01 -.306E+01 -.798E+01   0 .00E+00 .53E+01
-.799E+01 -.305E+01 -.340E-01 -.243E+01 -.305E+01 -.799E+01   0 .00E+00 .53E+01
-.805E+01 -.310E+01 -.103E-01 -.245E+01 -.310E+01 -.805E+01   0 .00E+00 .53E+01
-.805E+01 -.309E+01 -.372E-01 -.245E+01 -.309E+01 -.805E+01   0 .00E+00 .53E+01
Element No. =    55    (@ gauss pts. 1-4)
-.753E+01 -.283E+01  .753E-03 -.228E+01 -.283E+01 -.753E+01 179 .00E+00 .50E+01
-.753E+01 -.283E+01 -.571E-03 -.228E+01 -.283E+01 -.753E+01   0 .00E+00 .50E+01
-.755E+01 -.283E+01  .129E-01 -.228E+01 -.283E+01 -.755E+01 179 .00E+00 .50E+01
-.754E+01 -.284E+01  .109E-01 -.228E+01 -.284E+01 -.754E+01 179 .00E+00 .50E+01
Element No. =    61    (@ gauss pts. 1-4)
-.753E+01 -.283E+01 -.785E-03 -.228E+01 -.283E+01 -.753E+01   0 .00E+00 .50E+01
-.753E+01 -.283E+01  .759E-03 -.228E+01 -.283E+01 -.753E+01 179 .00E+00 .50E+01
-.754E+01 -.284E+01  .120E-01 -.228E+01 -.284E+01 -.754E+01 179 .00E+00 .50E+01
-.754E+01 -.284E+01  .180E-01 -.228E+01 -.284E+01 -.754E+01 179 .00E+00 .50E+01
Element No. =   115    (@ gauss pts. 1-4)
-.753E+01 -.325E+01  .120E-01 -.237E+01 -.325E+01 -.753E+01 179 .00E+00 .48E+01
-.753E+01 -.326E+01  .333E-02 -.237E+01 -.326E+01 -.753E+01 179 .00E+00 .48E+01
-.750E+01 -.314E+01  .351E-01 -.234E+01 -.314E+01 -.750E+01 179 .00E+00 .48E+01
-.749E+01 -.315E+01  .962E-02 -.234E+01 -.315E+01 -.749E+01 179 .00E+00 .48E+01
Element No. =   116    (@ gauss pts. 1-4)
```

```
-.746E+01 -.310E+01  .433E-01 -.232E+01 -.310E+01 -.746E+01 179 .00E+00 .48E+01
-.746E+01 -.310E+01  .119E-01 -.232E+01 -.310E+01 -.746E+01 179 .00E+00 .48E+01
-.740E+01 -.306E+01  .537E-01 -.230E+01 -.306E+01 -.740E+01 179 .00E+00 .48E+01
-.739E+01 -.306E+01  .146E-01 -.230E+01 -.306E+01 -.739E+01 179 .00E+00 .48E+01
Element No. =  117   (@ gauss pts. 1-4)
-.735E+01 -.304E+01  .604E-01 -.229E+01 -.304E+01 -.735E+01 179 .00E+00 .47E+01
-.734E+01 -.305E+01  .165E-01 -.229E+01 -.305E+01 -.734E+01 179 .00E+00 .47E+01
-.727E+01 -.304E+01  .702E-01 -.227E+01 -.304E+01 -.727E+01 179 .00E+00 .47E+01
-.726E+01 -.304E+01  .191E-01 -.227E+01 -.304E+01 -.726E+01 179 .00E+00 .47E+01
Element No. =  118   (@ gauss pts. 1-4)
-.720E+01 -.304E+01  .778E-01 -.225E+01 -.304E+01 -.720E+01 178 .00E+00 .46E+01
-.719E+01 -.305E+01  .212E-01 -.225E+01 -.305E+01 -.719E+01 179 .00E+00 .46E+01
-.710E+01 -.305E+01  .891E-01 -.223E+01 -.305E+01 -.710E+01 178 .00E+00 .45E+01
-.709E+01 -.306E+01  .242E-01 -.223E+01 -.306E+01 -.709E+01 179 .00E+00 .45E+01
Element No. =  119   (@ gauss pts. 1-4)
-.702E+01 -.306E+01  .980E-01 -.222E+01 -.306E+01 -.702E+01 178 .00E+00 .44E+01
-.701E+01 -.307E+01  .267E-01 -.222E+01 -.307E+01 -.701E+01 179 .00E+00 .44E+01
-.690E+01 -.309E+01  .111E+00 -.220E+01 -.308E+01 -.690E+01 178 .00E+00 .43E+01
-.688E+01 -.310E+01  .300E-01 -.220E+01 -.310E+01 -.688E+01 179 .00E+00 .43E+01
Element No. =  120   (@ gauss pts. 1-4)
-.680E+01 -.311E+01  .121E+00 -.218E+01 -.310E+01 -.681E+01 178 .00E+00 .42E+01
-.679E+01 -.312E+01  .328E-01 -.218E+01 -.312E+01 -.679E+01 179 .00E+00 .42E+01
-.666E+01 -.314E+01  .134E+00 -.216E+01 -.313E+01 -.667E+01 177 .00E+00 .41E+01
-.665E+01 -.315E+01  .366E-01 -.216E+01 -.315E+01 -.665E+01 179 .00E+00 .41E+01
Element No. =  130   (@ gauss pts. 1-4)
-.811E+01 -.312E+01 -.397E-01 -.247E+01 -.312E+01 -.811E+01   0 .00E+00 .53E+01
-.820E+01 -.317E+01 -.439E-01 -.250E+01 -.317E+01 -.820E+01   0 .00E+00 .54E+01
-.810E+01 -.313E+01 -.109E-01 -.247E+01 -.313E+01 -.810E+01   0 .00E+00 .53E+01
-.819E+01 -.318E+01 -.121E-01 -.250E+01 -.318E+01 -.819E+01   0 .00E+00 .54E+01
Element No. =  140   (@ gauss pts. 1-4)
-.827E+01 -.321E+01 -.469E-01 -.253E+01 -.321E+01 -.827E+01   0 .00E+00 .54E+01
-.838E+01 -.326E+01 -.507E-01 -.256E+01 -.326E+01 -.838E+01   0 .00E+00 .55E+01
-.827E+01 -.322E+01 -.130E-01 -.253E+01 -.322E+01 -.827E+01   0 .00E+00 .54E+01
-.838E+01 -.328E+01 -.140E-01 -.256E+01 -.328E+01 -.838E+01   0 .00E+00 .55E+01
Element No. =  150   (@ gauss pts. 1-4)
-.848E+01 -.330E+01 -.531E-01 -.259E+01 -.330E+01 -.848E+01   0 .00E+00 .56E+01
-.862E+01 -.336E+01 -.555E-01 -.264E+01 -.336E+01 -.862E+01   0 .00E+00 .57E+01
-.847E+01 -.332E+01 -.147E-01 -.259E+01 -.332E+01 -.847E+01   0 .00E+00 .55E+01
-.861E+01 -.338E+01 -.154E-01 -.264E+01 -.338E+01 -.861E+01   0 .00E+00 .56E+01
Element No. =  160   (@ gauss pts. 1-4)
-.874E+01 -.340E+01 -.565E-01 -.267E+01 -.340E+01 -.874E+01   0 .00E+00 .57E+01
-.892E+01 -.346E+01 -.563E-01 -.272E+01 -.346E+01 -.892E+01   0 .00E+00 .59E+01
-.873E+01 -.342E+01 -.157E-01 -.267E+01 -.342E+01 -.873E+01   0 .00E+00 .57E+01
-.891E+01 -.348E+01 -.156E-01 -.273E+01 -.348E+01 -.891E+01   0 .00E+00 .58E+01
Element No. =  170   (@ gauss pts. 1-4)
-.907E+01 -.350E+01 -.547E-01 -.277E+01 -.350E+01 -.907E+01   0 .00E+00 .60E+01
-.930E+01 -.355E+01 -.499E-01 -.283E+01 -.355E+01 -.931E+01   0 .00E+00 .61E+01
-.906E+01 -.352E+01 -.152E-01 -.277E+01 -.352E+01 -.906E+01   0 .00E+00 .60E+01
-.930E+01 -.358E+01 -.140E-01 -.283E+01 -.358E+01 -.930E+01   0 .00E+00 .61E+01
Element No. =  180   (@ gauss pts. 1-4)
-.950E+01 -.358E+01 -.443E-01 -.288E+01 -.358E+01 -.950E+01   0 .00E+00 .63E+01
-.979E+01 -.362E+01 -.325E-01 -.295E+01 -.362E+01 -.979E+01   0 .00E+00 .65E+01
-.949E+01 -.361E+01 -.124E-01 -.288E+01 -.361E+01 -.949E+01   0 .00E+00 .63E+01
-.978E+01 -.365E+01 -.930E-02 -.295E+01 -.365E+01 -.978E+01   0 .00E+00 .65E+01
Element No. =  190   (@ gauss pts. 1-4)
-.100E+02 -.364E+01 -.207E-01 -.301E+01 -.364E+01 -.100E+02   0 .00E+00 .67E+01
-.104E+02 -.365E+01  .709E-03 -.309E+01 -.365E+01 -.104E+02 179 .00E+00 .70E+01
-.100E+02 -.367E+01 -.609E-02 -.301E+01 -.367E+01 -.100E+02   0 .00E+00 .67E+01
-.104E+02 -.368E+01 -.258E-03 -.309E+01 -.368E+01 -.104E+02   0 .00E+00 .70E+01
Element No. =  200   (@ gauss pts. 1-4)
-.107E+02 -.364E+01  .207E-01 -.315E+01 -.364E+01 -.107E+02 179 .00E+00 .73E+01
-.111E+02 -.362E+01  .547E-01 -.324E+01 -.362E+01 -.111E+02 179 .00E+00 .77E+01
-.107E+02 -.367E+01  .508E-02 -.316E+01 -.367E+01 -.107E+02 179 .00E+00 .73E+01
-.111E+02 -.364E+01  .140E-01 -.325E+01 -.364E+01 -.111E+02 179 .00E+00 .77E+01
Element No. =  210   (@ gauss pts. 1-4)
-.115E+02 -.358E+01  .853E-01 -.332E+01 -.358E+01 -.115E+02 179 .00E+00 .80E+01
-.120E+02 -.350E+01  .133E+00 -.341E+01 -.350E+01 -.120E+02 179 .00E+00 .86E+01
-.115E+02 -.361E+01  .228E-01 -.332E+01 -.361E+01 -.115E+02 179 .00E+00 .80E+01
-.120E+02 -.353E+01  .364E-01 -.342E+01 -.353E+01 -.120E+02 179 .00E+00 .86E+01
Element No. =  220   (@ gauss pts. 1-4)
-.125E+02 -.343E+01  .172E+00 -.349E+01 -.342E+01 -.125E+02 178 .00E+00 .90E+01
-.131E+02 -.329E+01  .225E+00 -.360E+01 -.328E+01 -.131E+02 178 .00E+00 .97E+01
-.125E+02 -.345E+01  .445E-01 -.350E+01 -.345E+01 -.125E+02 179 .00E+00 .90E+01
-.131E+02 -.332E+01  .564E-01 -.361E+01 -.332E+01 -.131E+02 179 .00E+00 .96E+01
Element No. =  221   (@ gauss pts. 1-4)
-.653E+01 -.318E+01  .398E-01 -.214E+01 -.318E+01 -.653E+01 179 .00E+00 .40E+01
-.635E+01 -.322E+01  .456E-01 -.210E+01 -.322E+01 -.635E+01 179 .00E+00 .38E+01
-.655E+01 -.317E+01  .147E+00 -.214E+01 -.316E+01 -.655E+01 177 .00E+00 .40E+01
-.637E+01 -.321E+01  .168E+00 -.211E+01 -.320E+01 -.638E+01 176 .00E+00 .38E+01
```

```
Element No. =  231    (@ gauss pts. 1-4)
-.620E+01 -.326E+01  .502E-01 -.208E+01 -.325E+01 -.620E+01 179 .00E+00 .37E+01
-.598E+01 -.331E+01  .568E-01 -.204E+01 -.331E+01 -.598E+01 178 .00E+00 .35E+01
-.622E+01 -.324E+01  .184E+00 -.208E+01 -.323E+01 -.623E+01 176 .00E+00 .37E+01
-.601E+01 -.329E+01  .209E+00 -.205E+01 -.328E+01 -.602E+01 175 .00E+00 .35E+01
Element No. =  241    (@ gauss pts. 1-4)
-.581E+01 -.335E+01  .621E-01 -.201E+01 -.335E+01 -.581E+01 178 .00E+00 .33E+01
-.555E+01 -.340E+01  .697E-01 -.197E+01 -.340E+01 -.555E+01 178 .00E+00 .31E+01
-.583E+01 -.333E+01  .228E+00 -.202E+01 -.331E+01 -.585E+01 174 .00E+00 .34E+01
-.558E+01 -.338E+01  .256E+00 -.197E+01 -.336E+01 -.561E+01 173 .00E+00 .32E+01
Element No. =  251    (@ gauss pts. 1-4)
-.534E+01 -.345E+01  .756E-01 -.193E+01 -.344E+01 -.535E+01 177 .00E+00 .30E+01
-.504E+01 -.350E+01  .838E-01 -.188E+01 -.350E+01 -.505E+01 176 .00E+00 .27E+01
-.537E+01 -.343E+01  .278E+00 -.194E+01 -.339E+01 -.541E+01 172 .00E+00 .30E+01
-.508E+01 -.348E+01  .309E+00 -.188E+01 -.342E+01 -.514E+01 169 .00E+00 .28E+01
Element No. =  261    (@ gauss pts. 1-4)
-.481E+01 -.354E+01  .901E-01 -.184E+01 -.354E+01 -.482E+01 175 .00E+00 .26E+01
-.447E+01 -.360E+01  .988E-01 -.178E+01 -.359E+01 -.448E+01 173 .00E+00 .24E+01
-.485E+01 -.352E+01  .332E+00 -.184E+01 -.344E+01 -.493E+01 166 .00E+00 .27E+01
-.451E+01 -.357E+01  .363E+00 -.178E+01 -.345E+01 -.464E+01 161 .00E+00 .25E+01
Element No. =  271    (@ gauss pts. 1-4)
-.421E+01 -.363E+01  .105E+00 -.173E+01 -.361E+01 -.423E+01 170 .00E+00 .23E+01
-.384E+01 -.367E+01  .114E+00 -.165E+01 -.361E+01 -.390E+01 153 .00E+00 .21E+01
-.426E+01 -.360E+01  .387E+00 -.173E+01 -.342E+01 -.444E+01 155 .00E+00 .24E+01
-.389E+01 -.364E+01  .418E+00 -.166E+01 -.333E+01 -.420E+01 143 .00E+00 .22E+01
Element No. =  281    (@ gauss pts. 1-4)
-.356E+01 -.369E+01  .119E+00 -.160E+01 -.349E+01 -.376E+01 121 .00E+00 .20E+01
-.318E+01 -.370E+01  .127E+00 -.151E+01 -.315E+01 -.373E+01 102 .00E+00 .20E+01
-.361E+01 -.366E+01  .440E+00 -.160E+01 -.320E+01 -.408E+01 133 .00E+00 .22E+01
-.323E+01 -.367E+01  .467E+00 -.152E+01 -.293E+01 -.397E+01 122 .00E+00 .21E+01
Element No. =  291    (@ gauss pts. 1-4)
-.288E+01 -.370E+01  .132E+00 -.145E+01 -.286E+01 -.372E+01  98 .00E+00 .20E+01
-.249E+01 -.367E+01  .137E+00 -.135E+01 -.247E+01 -.369E+01  96 .00E+00 .20E+01
-.294E+01 -.367E+01  .485E+00 -.145E+01 -.270E+01 -.391E+01 116 .00E+00 .21E+01
-.255E+01 -.364E+01  .506E+00 -.136E+01 -.235E+01 -.384E+01 111 .00E+00 .22E+01
Element No. =  301    (@ gauss pts. 1-4)
-.220E+01 -.363E+01  .140E+00 -.128E+01 -.218E+01 -.365E+01  95 .00E+00 .21E+01
-.181E+01 -.356E+01  .143E+00 -.118E+01 -.180E+01 -.357E+01  94 .00E+00 .21E+01
-.226E+01 -.361E+01  .518E+00 -.129E+01 -.208E+01 -.378E+01 108 .00E+00 .22E+01
-.187E+01 -.353E+01  .527E+00 -.119E+01 -.172E+01 -.368E+01 106 .00E+00 .23E+01
Element No. =  311    (@ gauss pts. 1-4)
-.153E+01 -.348E+01  .143E+00 -.110E+01 -.152E+01 -.349E+01  94 .00E+00 .22E+01
-.117E+01 -.333E+01  .141E+00 -.992E+00 -.117E+01 -.334E+01  93 .00E+00 .23E+01
-.159E+01 -.346E+01  .530E+00 -.111E+01 -.145E+01 -.360E+01 104 .00E+00 .23E+01
-.123E+01 -.332E+01  .523E+00 -.100E+01 -.111E+01 -.345E+01 103 .00E+00 .24E+01
Element No. =  330    (@ gauss pts. 1-4)
-.233E+02 -.313E+01  .941E+00 -.396E+01 -.309E+01 -.233E+02 177 .00E+00 .20E+02
-.245E+02 -.271E+01  .107E+01 -.408E+01 -.265E+01 -.245E+02 177 .00E+00 .21E+02
-.233E+02 -.312E+01  .256E+00 -.396E+01 -.312E+01 -.233E+02 179 .00E+00 .20E+02
-.246E+02 -.269E+01  .292E+00 -.409E+01 -.269E+01 -.246E+02 179 .00E+00 .21E+02
Element No. =  340    (@ gauss pts. 1-4)
-.255E+02 -.234E+01  .118E+01 -.417E+01 -.228E+01 -.255E+02 177 .00E+00 .22E+02
-.270E+02 -.175E+01  .139E+01 -.431E+01 -.167E+01 -.271E+02 176 .00E+00 .24E+02
-.256E+02 -.233E+01  .308E+00 -.419E+01 -.233E+01 -.256E+02 179 .00E+00 .22E+02
-.271E+02 -.176E+01  .355E+00 -.433E+01 -.176E+01 -.271E+02 179 .00E+00 .24E+02
Element No. =  350    (@ gauss pts. 1-4)
-.282E+02 -.125E+01  .160E+01 -.441E+01 -.115E+01 -.283E+02 176 .00E+00 .26E+02
-.299E+02 -.466E+00  .196E+01 -.456E+01 -.336E+00 -.300E+02 176 .00E+00 .28E+02
-.284E+02 -.126E+01  .450E+00 -.445E+01 -.125E+01 -.284E+02 179 .00E+00 .26E+02
-.306E+02 -.393E+00  .557E+00 -.464E+01 -.383E+00 -.306E+02 178 .00E+00 .28E+02
Element No. =  351    (@ gauss pts. 1-4)
-.938E+00 -.534E+01  .177E+00 -.941E+00 -.931E+00 -.534E+01  92 .00E+00 .44E+01
-.670E+00 -.479E+01  .158E+00 -.819E+00 -.664E+00 -.479E+01  92 .00E+00 .41E+01
-.100E+01 -.536E+01  .654E+00 -.954E+00 -.906E+00 -.545E+01  98 .00E+00 .45E+01
-.729E+00 -.481E+01  .582E+00 -.830E+00 -.647E+00 -.489E+01  97 .00E+00 .42E+01
Element No. =  361    (@ gauss pts. 1-4)
-.490E+00 -.433E+01  .138E+00 -.723E+00 -.485E+00 -.433E+01  92 .00E+00 .37E+01
-.280E+00 -.361E+01  .110E+00 -.583E+00 -.276E+00 -.361E+01  91 .00E+00 .32E+01
-.542E+00 -.435E+01  .519E+00 -.734E+00 -.473E+00 -.442E+01  97 .00E+00 .38E+01
-.317E+00 -.365E+01  .417E+00 -.595E+00 -.265E+00 -.370E+01  97 .00E+00 .33E+01
Element No. =  371    (@ gauss pts. 1-4)
-.152E+00 -.301E+01  .881E-01 -.475E+00 -.149E+00 -.302E+01  91 .00E+00 .27E+01
-.290E-01 -.208E+01  .489E-01 -.317E+00 -.278E-01 -.208E+01  91 .00E+00 .19E+01
-.178E+00 -.307E+01  .329E+00 -.487E+00 -.141E+00 -.310E+01  96 .00E+00 .28E+01
-.414E-01 -.214E+01  .184E+00 -.327E+00 -.254E-01 -.216E+01  94 .00E+00 .20E+01
    Reactions
```

Node	X-Reac.	Y-Reac.	Node	X-Reac.	Y-Reac.
1	.301826E+01	.000000E+00	2	.121981E+02	.000000E+00
3	.553938E+01	.000000E+00	4	.991099E+01	.000000E+00
5	.449265E+01	.000000E+00	6	.803063E+01	.000000E+00
7	.363481E+01	.000000E+00	8	.650036E+01	.000000E+00
9	.294267E+01	.000000E+00	10	.526567E+01	.000000E+00
11	.238503E+01	.000000E+00	12	.427116E+01	.000000E+00
13	.204788E+01	.000000E+00	424	.000000E+00	.134596E+01
445	.000000E+00	.521506E+01	456	.000000E+00	.227374E+01
477	.000000E+00	.400904E+01	488	.000000E+00	.178676E+01
509	.000000E+00	.317185E+01	520	.000000E+00	.142512E+01
541	.000000E+00	.254248E+01	552	.000000E+00	.114809E+01
573	.000000E+00	.205498E+01	584	.000000E+00	.931022E+00
605	.000000E+00	.167020E+01	616	.000000E+00	.802095E+00
637	.392627E+01	.000000E+00	648	.183290E+01	.000000E+00
669	.340817E+01	.000000E+00	680	.159449E+01	.000000E+00
701	.297321E+01	.000000E+00	712	.139529E+01	.000000E+00
733	.261051E+01	.000000E+00	1044	.122831E+01	.000000E+00
1065	.230896E+01	.000000E+00	1076	.109187E+01	.000000E+00
1097	.205970E+01	.000000E+00	1108	.977369E+00	.000000E+00
1129	.185428E+01	.000000E+00	1200	.884541E+00	.000000E+00
1190	.168486E+01	.000000E+00	1170	.806823E+00	.000000E+00
1160	.154486E+01	.000000E+00	1140	.742557E+00	.000000E+00
1130	.142530E+01	.000000E+00	1014	.745767E+00	.000000E+00
1004	.000000E+00	.154166E+01	984	.000000E+00	.721456E+00
974	.000000E+00	.134426E+01	954	.000000E+00	.630205E+00
944	.000000E+00	.117538E+01	924	.000000E+00	.551732E+00
914	.000000E+00	.102870E+01	894	.000000E+00	.482423E+00
884	.000000E+00	.898495E+00	864	.000000E+00	.421094E+00
854	.000000E+00	.780552E+00	834	.000000E+00	.364167E+00
824	.000000E+00	.671552E+00	804	.000000E+00	.311655E+00
794	.000000E+00	.569211E+00	774	.000000E+00	.261640E+00
764	.000000E+00	.472503E+00	744	.000000E+00	.214451E+00
734	.000000E+00	.380431E+00	413	.000000E+00	.182826E+00
412	.159431E+01	.000000E+00	411	.832573E+00	.000000E+00
410	.175643E+01	.000000E+00	409	.925875E+00	.000000E+00
408	.196029E+01	.000000E+00	407	.537529E+00	.000000E+00
406	.000000E+00	.337858E+00	405	.000000E+00	.152779E+00
404	.000000E+00	.264630E+00	403	.000000E+00	.111925E+00
402	.000000E+00	.169645E+00	401	.000000E+00	.298833E-01

```
Lapsed seconds after input..................      48.0
Lapsed seconds after solution...............     502.0
Total seconds to completion.................     525.0
Time of completion.........................  00:36:12^@^@
Date of completion.........................04/06/88^@^@
...........     495.0
Total seconds to completion.................     518.0
Time of completion.........................  23:39:41^@^@
Date of completion.........................04/06/88^@^@
```

1

DATE 00/00/00 TIME 00:00:00 JFT 2.0 01/30/88

```
*****************************************************************************************
*                                                                                       *
*                    JJ                    A                      CCCCCCCCCCC            *
*                    JJ                   A A                    CC         CC          *
*                    JJ                  AA AA                   CC                     *
*                    JJ                 AA   AA                  CC                     *
*                    JJ                AA     AA                 CC                     *
*                    JJ               AAAAAAAAAAA                CC                     *
*        JJ          JJ              AA         AA              CC                     *
*        JJ          JJ             AA           AA             CC         CC          *
*         JJJJJJJJJJJJJJ           AA             AA             CCCCCCCCCCC            *
*                                                                                       *
*****************************************************************************************
```

PROGRAMMED BY
JOHNNY H. BIFFLE
DIVISION 1521
SANDIA NATIONAL LABORATORIES
ALBUQUERQUE, NEW MEXICO 87185

1

INPUT DATA CARD IMAGES

jac verification v shaft BONDED 1/30/89 Low tol.

```
         1         2         3         4         5         6         7         8
12345678901234567890123456789012345678901234567890123456789012345678901234567890

    3    9    2    6    1    0    2    1    1    0    3 1000    0         0.
    0    0    0    0    0
  304  357  102
    1.506     1.506     1.649     1.344     1.773     1.174     1.878      .998
    1.966      .813     2.034      .621     2.085      .422     2.117      .215
    2.130      .000     1.644     1.644     1.785     1.465     1.908     1.278
    2.013     1.083     2.099      .882     2.167      .672     2.217      .456
    2.249      .232     2.262      .000     1.824     1.824     1.963     1.622
    2.084     1.412     2.188     1.195     2.273      .971     2.340      .739
    2.389      .500     2.420      .254     2.433      .000     2.057     2.057
    2.194     1.826     2.313     1.586     2.415     1.340     2.499     1.086
    2.564      .826     2.613      .558     2.643      .282     2.656      .000
    2.361     2.361     2.495     2.091     2.611     1.813     2.710     1.528
    2.792     1.237     2.856      .938     2.903      .632     2.933      .320
    2.946      .000     2.756     2.756     2.885     2.435     2.998     2.108
    3.094     1.773     3.173     1.432     3.236     1.084     3.281      .730
    3.310      .368     3.322      .000     3.269     3.269     3.393     2.883
    3.501     2.491     3.593     2.092     3.669     1.687     3.729     1.275
    3.772      .856     3.800      .431     3.812      .000     3.936     3.936
    4.053     3.466     4.155     2.989     4.242     2.506     4.313     2.017
    4.370     1.522     4.411     1.021     4.437      .514     4.448      .000
    4.804     4.804     4.911     4.223     5.005     3.637     5.085     3.045
    5.151     2.447     5.203     1.844     5.241     1.235     5.265      .620
    5.275      .000     5.931     5.931     6.027     5.207     6.110     4.479
    6.182     3.745     6.240     3.006     6.286     2.262     6.320     1.513
    6.342      .759     6.351      .000     7.397     7.397     7.477     6.487
    7.547     5.573     7.607     4.655     7.656     3.732     7.695     2.806
    7.723     1.875     7.741      .939     7.749      .000     9.302     9.302
    9.363     8.151     9.415     6.996     9.460     5.838     9.497     4.677
    9.526     3.512     9.547     2.345     9.560     1.174     9.566      .000
   11.780    11.780    11.814    10.313    11.843     8.845    11.869     7.376
   11.889     5.904    11.906     4.431    11.918     2.956    11.925     1.479
   11.929      .000    15.000    15.000    15.000    13.125    15.000    11.250
   15.000     9.375    15.000     7.500    15.000     5.625    15.000     3.750
   15.000     1.875    15.000      .000     1.344     1.649     1.465     1.785
    1.622     1.963     1.826     2.194     2.091     2.495     2.435     2.885
    2.883     3.393     3.466     4.053     4.223     4.911     5.207     6.027
    6.487     7.477     8.151     9.363    10.313    11.814    13.125    15.000
    1.174     1.773     1.278     1.908     1.412     2.084     1.586     2.313
    1.813     2.611     2.108     2.998     2.491     3.501     2.989     4.155
    3.637     5.005     4.479     6.110     5.573     7.547     6.996     9.415
    8.845    11.843    11.250    15.000      .998     1.878     1.083     2.013
    1.195     2.188     1.340     2.415     1.528     2.710     1.773     3.094
    2.092     3.593     2.506     4.242     3.045     5.085     3.745     6.182
    4.655     7.607     5.838     9.460     7.376    11.869     9.375    15.000
     .813     1.966      .882     2.099      .971     2.273     1.086     2.499
    1.237     2.792     1.432     3.173     1.687     3.669     2.017     4.313
    2.447     5.151     3.006     6.240     3.732     7.656     4.677     9.497
    5.904    11.889     7.500    15.000      .621     2.034      .672     2.167
     .739     2.340      .826     2.564      .938     2.856     1.084     3.236
    1.275     3.729     1.522     4.370     1.844     5.203     2.262     6.286
    2.806     7.695     3.512     9.526     4.431    11.906     5.625    15.000
     .422     2.085      .456     2.217      .500     2.389      .558     2.613
     .632     2.903      .730     3.281      .856     3.772     1.021     4.411
    1.235     5.241     1.513     6.320     1.875     7.723     2.345     9.547
    2.956    11.918     3.750    15.000      .215     2.117      .232     2.249
     .254     2.420      .282     2.643      .320     2.933      .368     3.310
     .431     3.800      .514     4.437      .620     5.265      .759     6.342
     .939     7.741     1.174     9.560     1.479    11.925     1.875    15.000
     .000     2.130      .000     2.262      .000     2.433      .000     2.656
     .000     2.946      .000     3.322      .000     3.812      .000     4.448
     .000     5.275      .000     6.351      .000     7.749      .000     9.566
     .000    11.929      .000    15.000     2.080      .000     2.067      .206
    2.036      .405     1.987      .598     1.920      .785     1.834      .966
    1.731     1.140     1.610     1.308     1.470     1.470     2.030      .000
    2.017      .197     1.987      .389     1.939      .575     1.874      .757
```

1.790	.934	1.689	1.105	1.570	1.272	1.434	1.434
1.980	.000	1.968	.188	1.938	.372	1.892	.552
1.827	.729	1.746	.902	1.647	1.071	1.531	1.236
1.398	1.398	1.930	.000	1.918	.179	1.890	.356
1.844	.530	1.781	.701	1.702	.870	1.606	1.036
1.492	1.201	1.362	1.362	1.880	.000	1.869	.170
1.841	.339	1.796	.507	1.735	.673	1.658	.838
1.564	1.002	1.453	1.165	1.326	1.326	1.830	.000
1.819	.161	1.792	.322	1.749	.484	1.689	.645
1.614	.806	1.522	.967	1.414	1.129	1.290	1.290
1.153	1.414	1.185	1.453	1.217	1.492	1.248	1.531
1.280	1.570	1.312	1.610	1.009	1.522	1.037	1.564
1.064	1.606	1.092	1.647	1.119	1.689	1.147	1.731
.858	1.614	.881	1.658	.905	1.702	.928	1.746
.951	1.790	.974	1.834	.700	1.689	.719	1.735
.738	1.781	.757	1.827	.775	1.874	.794	1.920
.536	1.749	.550	1.796	.564	1.844	.578	1.892
.593	1.939	.607	1.987	.364	1.792	.374	1.841
.383	1.890	.393	1.938	.402	1.987	.412	2.036
.185	1.819	.190	1.869	.195	1.918	.200	1.968
.205	2.017	.210	2.067	.000	1.830	.000	1.880
.000	1.330	.000	1.980	.000	2.030	.000	2.080
1.506	1.506	1.649	1.344	1.773	1.174	1.878	.998
1.966	.813	2.034	.621	2.085	.422	2.117	.215
2.130	.000	1.344	1.649	1.174	1.773	.998	1.878
.813	1.966	.621	2.034	.422	2.085	.215	2.117
.000	2.130						

341	342	11	10	3
342	343	12	11	3
343	344	13	12	3
344	345	14	13	3
345	346	15	14	3
346	347	16	15	3
347	348	17	16	3
348	349	18	17	3
10	11	20	19	3
11	12	21	20	3
12	13	22	21	3
13	14	23	22	3
14	15	24	23	3
15	16	25	24	3
16	17	26	25	3
17	18	27	26	3
19	20	29	28	3
20	21	30	29	3
21	22	31	30	3
22	23	32	31	3
23	24	33	32	3
24	25	34	33	3
25	26	35	34	3
26	27	36	35	3
28	29	38	37	3
29	30	39	38	3
30	31	40	39	3
31	32	41	40	3
32	33	42	41	3
33	34	43	42	3
34	35	44	43	3
35	36	45	44	3
37	38	47	46	3
38	39	48	47	3
39	40	49	48	3
40	41	50	49	3
41	42	51	50	3
42	43	52	51	3
43	44	53	52	3
44	45	54	53	3
46	47	56	55	3
47	48	57	56	3
48	49	58	57	3
49	50	59	58	3
50	51	60	59	3
51	52	61	60	3
52	53	62	61	3
53	54	63	62	3
55	56	65	64	3
56	57	66	65	3
57	58	67	66	3
58	59	68	67	3
59	60	69	68	3
60	61	70	69	3
61	62	71	70	3
62	63	72	71	3
64	65	74	73	3
65	66	75	74	3
66	67	76	75	3
67	68	77	76	3
68	69	78	77	3
69	70	79	78	3
70	71	80	79	3
71	72	81	80	3
73	74	83	82	3
74	75	84	83	3
75	76	85	84	3
76	77	86	85	3
77	78	87	86	3
78	79	88	87	3
79	80	89	88	3
80	81	90	89	3
82	83	92	91	3
83	84	93	92	3
84	85	94	93	3
85	86	95	94	3
86	87	96	95	3
87	88	97	96	3
88	89	98	97	3

89	90	99	98	3
91	92	101	100	3
92	93	102	101	3
93	94	103	102	3
94	95	104	103	3
95	96	105	104	3
96	97	106	105	3
97	98	107	106	3
98	99	108	107	3
100	101	110	109	3
101	102	111	110	3
102	103	112	111	3
103	104	113	112	3
104	105	114	113	3
105	106	115	114	3
106	107	116	115	3
107	108	117	116	3
109	110	119	118	3
110	111	120	119	3
111	112	121	120	3
112	113	122	121	3
113	114	123	122	3
114	115	124	123	3
115	116	125	124	3
116	117	126	125	3
341	10	128	350	3
10	19	129	128	3
19	28	130	129	3
28	37	131	130	3
37	46	132	131	3
46	55	133	132	3
55	64	134	133	3
64	73	135	134	3
73	82	136	135	3
82	91	137	136	3
91	100	138	137	3
100	109	139	138	3
109	118	140	139	3
350	128	142	351	3
128	129	143	142	3
129	130	144	143	3
130	131	145	144	3
131	132	146	145	3
132	133	147	146	3
133	134	148	147	3
134	135	149	148	3
135	136	150	149	3
136	137	151	150	3
137	138	152	151	3
138	139	153	152	3
139	140	154	153	3
351	142	156	352	3
142	143	157	156	3
143	144	158	157	3
144	145	159	158	3
145	146	160	159	3
146	147	161	160	3
147	148	162	161	3
148	149	163	162	3
149	150	164	163	3
150	151	165	164	3
151	152	166	165	3
152	153	167	166	3
153	154	168	167	3
352	156	170	353	3
156	157	171	170	3
157	158	172	171	3
158	159	173	172	3
159	160	174	173	3
160	161	175	174	3
161	162	176	175	3
162	163	177	176	3
163	164	178	177	3
164	165	179	178	3
165	166	180	179	3
166	167	181	180	3
167	168	182	181	3
353	170	184	354	3
170	171	185	184	3
171	172	186	185	3
172	173	187	186	3
173	174	188	187	3
174	175	189	188	3
175	176	190	189	3
176	177	191	190	3
177	178	192	191	3
178	179	193	192	3
179	180	194	193	3
180	181	195	194	3
181	182	196	195	3
354	184	198	355	3
184	185	199	198	3
185	186	200	199	3
186	187	201	200	3
187	188	202	201	3
188	189	203	202	3
189	190	204	203	3
190	191	205	204	3
191	192	206	205	3
192	193	207	206	3
193	194	208	207	3
194	195	209	208	3
195	196	210	209	3
355	198	212	356	3
198	199	213	212	3
199	200	214	213	3

200	201	215	214	3
201	202	216	215	3
202	203	217	216	3
203	204	218	217	3
204	205	219	218	3
205	206	220	219	3
206	207	221	220	3
207	208	222	221	3
208	209	223	222	3
209	210	224	223	3
356	212	226	357	3
212	213	227	226	3
213	214	228	227	3
214	215	229	228	3
215	216	230	229	3
216	217	231	230	3
217	218	232	231	3
218	219	233	232	3
219	220	234	233	3
220	221	235	234	3
221	222	236	235	3
222	223	237	236	3
223	224	238	237	3
9	8	240	239	2
8	7	241	240	2
7	6	242	241	2
6	5	243	242	2
5	4	244	243	2
4	3	245	244	2
3	2	246	245	2
2	1	247	246	2
239	240	249	248	2
240	241	250	249	2
241	242	251	250	2
242	243	252	251	2
243	244	253	252	2
244	245	254	253	2
245	246	255	254	2
246	247	256	255	2
248	249	258	257	2
249	250	259	258	2
250	251	260	259	2
251	252	261	260	2
252	253	262	261	2
253	254	263	262	2
254	255	264	263	2
255	256	265	264	2
257	258	267	266	2
258	259	268	267	2
259	260	269	268	2
260	261	270	269	2
261	262	271	270	2
262	263	272	271	2
263	264	273	272	2
264	265	274	273	2
266	267	276	275	2
267	268	277	276	2
268	269	278	277	2
269	270	279	278	2
270	271	280	279	2
271	272	281	280	2
272	273	282	281	2
273	274	283	282	2
275	276	285	284	2
276	277	286	285	2
277	278	287	286	2
278	279	288	287	2
279	280	289	288	2
280	281	290	289	2
281	282	291	290	2
282	283	292	291	2
292	283	294	293	2
283	274	295	294	2
274	265	296	295	2
265	256	297	296	2
256	247	298	297	2
247	1	127	298	2
293	294	300	299	2
294	295	301	300	2
295	296	302	301	2
296	297	303	302	2
297	298	304	303	2
298	127	141	304	2
299	300	306	305	2
300	301	307	306	2
301	302	308	307	2
302	303	309	308	2
303	304	310	309	2
304	141	155	310	2
305	306	312	311	2
306	307	313	312	2
307	308	314	313	2
308	309	315	314	2
309	310	316	315	2
310	155	169	316	2
311	312	318	317	2
312	313	319	318	2
313	314	320	319	2
314	315	321	320	2
315	316	322	321	2
316	169	183	322	2
317	318	324	323	2
318	319	325	324	2
319	320	326	325	2
320	321	327	326	2
321	322	328	327	2

```
  322  183  197  328    2
  323  324  330  329    2
  324  325  331  330    2
  325  326  332  331    2
  326  327  333  332    2
  327  328  334  333    2
  328  197  211  334    2
  329  330  336  335    2
  330  331  337  336    2
  331  332  338  337    2
  332  333  339  338    2
  333  334  340  339    2
  334  211  225  340    2
   -4    9   18   27   36   45   54   63   72   81   90   99  108  117  126   -5
  238  237  236  235  234  233  232  231  230  229  228  227  226  225  340  339
  338  337  336  335   -6  284  275  266  257  248  239  349   -7  357   -8  126
  125  124  123  122  121  120  119  118   -9  118  140  154  168  182  196  210
  224  238  -10  225  211  197  183  169  155  141  127    1    2    3    4    5
    6    7    8    9  -11  357  356  355  354  353  352  351  350  341  342  343
  344  345  346  347  348  349
    1    1        .00        .00      10.00
LINEAR ELASTIC MATERIAL
        .00
  15200.00
        .22
        .00
        .00
        .00
        .00
        .0
    2    1        .00        .00      10.00
LINEAR ELASTIC MATERIAL
        .00
  28000.00
        .15
        .00
        .00
        .00
        .00
        .0
    3    1        .00        .00      10.00
LINEAR ELASTIC MATERIAL
        .00
  15200.00
        .22
        .00
        .00
        .00
        .00
        .0
    1    2     SOLUTION
      .000      1.000      1.000      1.000
    2    2     OUTPUT
      .000      1.000      1.000      1.000
    3    2     STARTING VECTOR CONTROL
      .000      1.000      1.000      1.000
    4    2     CONSTRAINT - CODE         2.
       0.          0.         1.         0.
    5    2     CONSTRAINT - CODE         1.
       0.          0.         1.         0.
    6    2     CONSTRAINT - CODE         2.
       0.          0.         1.         0.
    7    2     CONSTRAINT - CODE         1.
       0.          0.         1.         0.
    8    2     PRESSURE                  -1.
       0.          1.         1.         1.
    9    2     PRESSURE                  -1.
       0.          1.         1.         1.
    4    4        2.0       .000       .000
    5    5        1.0       .000       .000
    6    6        2.0       .000       .000
    7    7        1.0       .000       .000
    8    8       -1.0      7.530       .000
    9    9       -1.0      2.830       .000
   10   11       -1.0    1.0e-05    1.0e+10
     .3E-04     .1E-01
1jac verification v shaft BONDED 1/30/89 Low tol.                    TIME 00:00:00 DATE 00/00/00 JFT 2.0  01/30/88

jac verification v shaft BONDED 1/30/89 Low tol.
  NUMBER OF ELEMEMTS --------------------  304
  NUMBER OF NODES ----------------------  357
  NUMBER OF BOUNDARY FLAGS --------------  102
                      CONTROL CARDS
          ITEM  VALUE  CARD  FIELD
  NUMBER OF MATERIALS -------------------    3    1   1- 5
  TOTAL NUMBER OF FUNCTIONS -------------    9    1   6-10
  MAXIMUM NUMBER OF FUNCTION POINTS -----    2    1  11-15
  NUMBER OF BOUNDARY CARDS --------------    6    1  16-20
  NUMBER OF SLIDING INTERFACES ----------    1    1  21-25
  GEOMETRY TYPE PARAMETER ---------------    0    1  26-30
  PRINT OUTPUT FUNCTION NUMBER ----------    2    1  31-35
  SOLUTION CONTROL FUNCTION NUMBER ------    1    1  36-40
  NODE4 PARAMETER -----------------------    1    1  11-45
  NODE4 FUNCTION NUMBER -----------------    0    1  46-50
  TRIAL DISPLACEMENT FUNCTION NUMBER ----    3    1  51-55
  MAXIMUM NUMBER OF ITERATIONS ALLOWED -- 1000    1  56-60
  TEMPERATURE PARAMETER -----------------    0    1  61-65
  VISCOSITY PARAMETER ------------  .10000E+01    1  71-80
  X GRAVITY OR R ACCELERATION FUNCTION --    0    2   1- 5
  Y OR Z GRAVITY FUNCTION ---------------    0    2   6-10
  RESTART READ PARAMETER ----------------    0    2  11-15
  PLOT OUTPUT FUNCTION NUMBER -----------    0    2  16-20
  RESTART WRITE FUNCTION NUMBER ---------    0    2  21-25
  FT09 DATA FILE PRINT PARAMETER --------    0    2  26-30
```

```
        PLANE STRAIN PROBLEM

      CORE STORAGE REQUIRED IS  18887 WORDS.
      MAXIMUM MEMORY WHICH IS AVAILABLE IS    50000 WORDS.
1jac verification v shaft BONDED 1/30/89 Low tol.                          TIME 00:00:00 DATE 00/00/00 JFT 2.0  01/30/88

     MATERIAL PROPERTIES


0MATERIAL NUMBER  1
0     TYPE NO.-   1
0     DENSITY -    .000000E+00
0     BIRTH TIME -    .000000E+00
0     DEATH TIME -    .100000E+02
 LINEAR ELASTIC MATERIAL
       .000E+00       .000E+00       .000E+00       .000E+00       .000E+00       .000E+00       .000E+00       .000E+00
       .152E+05       .000E+00       .000E+00       .000E+00       .000E+00       .000E+00       .000E+00       .000E+00
       .220E+00       .000E+00       .000E+00       .000E+00       .000E+00       .000E+00       .000E+00       .000E+00
       .000E+00       .000E+00       .000E+00       .000E+00       .000E+00       .000E+00       .000E+00       .000E+00
       .000E+00       .000E+00       .000E+00       .000E+00       .000E+00       .000E+00       .000E+00       .000E+00
       .000E+00       .000E+00       .000E+00       .000E+00       .000E+00       .000E+00       .000E+00       .000E+00
       .000E+00       .000E+00       .000E+00       .000E+00       .000E+00       .000E+00       .000E+00       .000E+00
       .000E+00       .000E+00       .000E+00       .000E+00       .000E+00       .000E+00       .000E+00       .000E+00
1jac verification v shaft BONDED 1/30/89 Low tol.                          TIME 00:00:00 DATE 00/00/00 JFT 2.0  01/30/88

     MATERIAL PROPERTIES


0MATERIAL NUMBER  2
0     TYPE NO.-   1
0     DENSITY -    .000000E+00
0     BIRTH TIME -    .000000E+00
0     DEATH TIME -    .100000E+02
 LINEAR ELASTIC MATERIAL
       .000E+00       .000E+00       .000E+00       .000E+00       .000E+00       .000E+00       .000E+00       .000E+00
       .280E+05       .000E+00       .000E+00       .000E+00       .000E+00       .000E+00       .000E+00       .000E+00
       .150E+00       .000E+00       .000E+00       .000E+00       .000E+00       .000E+00       .000E+00       .000E+00
       .000E+00       .000E+00       .000E+00       .000E+00       .000E+00       .000E+00       .000E+00       .000E+00
       .000E+00       .000E+00       .000E+00       .000E+00       .000E+00       .000E+00       .000E+00       .000E+00
       .000E+00       .000E+00       .000E+00       .000E+00       .000E+00       .000E+00       .000E+00       .000E+00
       .000E+00       .000E+00       .000E+00       .000E+00       .000E+00       .000E+00       .000E+00       .000E+00
       .000E+00       .000E+00       .000E+00       .000E+00       .000E+00       .000E+00       .000E+00       .000E+00
1jac verification v shaft BONDED 1/30/89 Low tol.                          TIME 00:00:00 DATE 00/00/00 JFT 2.0  01/30/88

     MATERIAL PROPERTIES


0MATERIAL NUMBER  3
0     TYPE NO.-   1
0     DENSITY -    .000000E+00
0     BIRTH TIME -    .000000E+00
0     DEATH TIME -    .100000E+02
 LINEAR ELASTIC MATERIAL
       .000E+00       .000E+00       .000E+00       .000E+00       .000E+00       .000E+00       .000E+00       .000E+00
       .152E+05       .000E+00       .000E+00       .000E+00       .000E+00       .000E+00       .000E+00       .000E+00
       .220E+00       .000E+00       .000E+00       .000E+00       .000E+00       .000E+00       .000E+00       .000E+00
       .000E+00       .000E+00       .000E+00       .000E+00       .000E+00       .000E+00       .000E+00       .000E+00
       .000E+00       .000E+00       .000E+00       .000E+00       .000E+00       .000E+00       .000E+00       .000E+00
       .000E+00       .000E+00       .000E+00       .000E+00       .000E+00       .000E+00       .000E+00       .000E+00
       .000E+00       .000E+00       .000E+00       .000E+00       .000E+00       .000E+00       .000E+00       .000E+00
       .000E+00       .000E+00       .000E+00       .000E+00       .000E+00       .000E+00       .000E+00       .000E+00
1jac verification v shaft BONDED 1/30/89 Low tol.                          TIME 00:00:00 DATE 00/00/00 JFT 2.0  01/30/88
      FUNCTIONS

 NAME      SOLUTION

   DISCRIPTION OF FUNCTION    1 WHICH CONTAINS    2 POINTS
     NUMBER       TIME            VALUE
        1      .00000E+00      .10000E+01
        2      .10000E+01      .10000E+01

 NAME      OUTPUT

   DISCRIPTION OF FUNCTION    2 WHICH CONTAINS    2 POINTS
     NUMBER       TIME            VALUE
        1      .00000E+00      .10000E+01
        2      .10000E+01      .10000E+01

 NAME      STARTING VECTOR CONTROL

   DISCRIPTION OF FUNCTION    3 WHICH CONTAINS    2 POINTS
     NUMBER       TIME            VALUE
        1      .00000E+00      .10000E+01
        2      .10000E+01      .10000E+01

 NAME      CONSTRAINT - CODE        2.

   DISCRIPTION OF FUNCTION    4 WHICH CONTAINS    2 POINTS
     NUMBER       TIME            VALUE
        1      .00000E+00      .00000E+00
        2      .10000E+01      .00000E+00

 NAME      CONSTRAINT - CODE        1.

   DISCRIPTION OF FUNCTION    5 WHICH CONTAINS    2 POINTS
     NUMBER       TIME            VALUE
        1      .00000E+00      .00000E+00
        2      .10000E+01      .00000E+00

 NAME      CONSTRAINT - CODE        2.

   DISCRIPTION OF FUNCTION    6 WHICH CONTAINS    2 POINTS
     NUMBER       TIME            VALUE
        1      .00000E+00      .00000E+00
        2      .10000E+01      .00000E+00
```

NAME CONSTRAINT - CODE 1.

DISCRIPTION OF FUNCTION 7 WHICH CONTAINS 2 POINTS

NUMBER	TIME	VALUE
1	.00000E+00	.00000E+00
2	.10000E+01	.00000E+00

NAME PRESSURE -1.

DISCRIPTION OF FUNCTION 8 WHICH CONTAINS 2 POINTS

NUMBER	TIME	VALUE
1	.00000E+00	.10000E+01
2	.10000E+01	.10000E+01

NAME PRESSURE -1.

DISCRIPTION OF FUNCTION 9 WHICH CONTAINS 2 POINTS

NUMBER	TIME	VALUE
1	.00000E+00	.10000E+01
2	.10000E+01	.10000E+01

DISPLACEMENT AND FORCE BOUNDARY CONDITIONS

IFLAG	FUNCTION	CODE	UX	UY
4	4	2.00000	.00000E+00	.00000E+00
5	5	1.00000	.00000E+00	.00000E+00
6	6	2.00000	.00000E+00	.00000E+00
7	7	1.00000	.00000E+00	.00000E+00
8	8	-1.00000	.75300E+01	.00000E+00
9	9	-1.00000	.28300E+01	.00000E+00

PRESSURE BOUNDARY CONDITIONS

NUMBER	NODES		FUNCTION	NORMAL	TANGENT
1	126	125	8	.753000E+01	.000000E+00
2	125	124	8	.753000E+01	.000000E+00
3	124	123	8	.753000E+01	.000000E+00
4	123	122	8	.753000E+01	.000000E+00
5	122	121	8	.753000E+01	.000000E+00
6	121	120	8	.753000E+01	.000000E+00
7	120	119	8	.753000E+01	.000000E+00
8	119	118	8	.753000E+01	.000000E+00
9	118	140	9	.283000E+01	.000000E+00
10	140	154	9	.283000E+01	.000000E+00
11	154	168	9	.283000E+01	.000000E+00
12	168	182	9	.283000E+01	.000000E+00
13	182	196	9	.283000E+01	.000000E+00
14	196	210	9	.283000E+01	.000000E+00
15	210	224	9	.283000E+01	.000000E+00
16	224	238	9	.283000E+01	.000000E+00

DISPLACEMENT BOUNDARY CONDITIONS

NUMBER	NODE	FUNCTION	CODE	UX	UY
1	9	4	.200000E+01	.000000E+00	.000000E+00
2	18	4	.200000E+01	.000000E+00	.000000E+00
3	27	4	.200000E+01	.000000E+00	.000000E+00
4	36	4	.200000E+01	.000000E+00	.000000E+00
5	45	4	.200000E+01	.000000E+00	.000000E+00
6	54	4	.200000E+01	.000000E+00	.000000E+00
7	63	4	.200000E+01	.000000E+00	.000000E+00
8	72	4	.200000E+01	.000000E+00	.000000E+00
9	81	4	.200000E+01	.000000E+00	.000000E+00
10	90	4	.200000E+01	.000000E+00	.000000E+00
11	99	4	.200000E+01	.000000E+00	.000000E+00
12	108	4	.200000E+01	.000000E+00	.000000E+00
13	117	4	.200000E+01	.000000E+00	.000000E+00
14	126	4	.200000E+01	.000000E+00	.000000E+00
15	238	5	.100000E+01	.000000E+00	.000000E+00
16	237	5	.100000E+01	.000000E+00	.000000E+00
17	236	5	.100000E+01	.000000E+00	.000000E+00
18	235	5	.100000E+01	.000000E+00	.000000E+00
19	234	5	.100000E+01	.000000E+00	.000000E+00
20	233	5	.100000E+01	.000000E+00	.000000E+00
21	232	5	.100000E+01	.000000E+00	.000000E+00
22	231	5	.100000E+01	.000000E+00	.000000E+00
23	230	5	.100000E+01	.000000E+00	.000000E+00
24	229	5	.100000E+01	.000000E+00	.000000E+00
25	228	5	.100000E+01	.000000E+00	.000000E+00
26	227	5	.100000E+01	.000000E+00	.000000E+00
27	226	5	.100000E+01	.000000E+00	.000000E+00
28	225	5	.100000E+01	.000000E+00	.000000E+00
29	340	5	.100000E+01	.000000E+00	.000000E+00
30	339	5	.100000E+01	.000000E+00	.000000E+00
31	338	5	.100000E+01	.000000E+00	.000000E+00
32	337	5	.100000E+01	.000000E+00	.000000E+00
33	336	5	.100000E+01	.000000E+00	.000000E+00
34	335	5	.100000E+01	.000000E+00	.000000E+00
35	284	6	.200000E+01	.000000E+00	.000000E+00
36	275	6	.200000E+01	.000000E+00	.000000E+00
37	266	6	.200000E+01	.000000E+00	.000000E+00
38	257	6	.200000E+01	.000000E+00	.000000E+00
39	248	6	.200000E+01	.000000E+00	.000000E+00
40	239	6	.200000E+01	.000000E+00	.000000E+00
41	349	6	.200000E+01	.000000E+00	.000000E+00
42	357	7	.100000E+01	.000000E+00	.000000E+00

SLIDING INTERFACE PARAMETERS

NUMBER	MASTER FLAG	SLAVE FLAG	COEFFICIENT OF FRICTION	NORMAL DISPLACEMENT TOLERANCE	NORMAL FORCE TOLERANCE	ADDITIONAL MASTER FLAGS							
1	10	11	-.10000E+01	.10000E-04	.10000E+11	0	0	0	0	0	0	0	0

16 MASTER ELEMENT SIDES FOR INTERFACE 1

NUMBER NODES

1	211	225
2	197	211
3	183	197
4	169	183
5	155	169
6	141	155
7	127	141
8	1	127
9	2	1
10	3	2
11	4	3
12	5	4
13	6	5
14	7	6
15	8	7
16	9	8

17 SLAVE NODES FOR INTERFACE 1

NUMBER	NODES
1	357
2	356
3	355
4	354
5	353
6	352
7	351
8	350
9	341
10	342
11	343
12	344
13	345
14	346
15	347
16	348
17	349

ljac verification v shaft BONDED 1/30/89 Low tol. TIME 00:00:00 DATE 00/00/00 JFT 2.0 01/30/88

STARTING TIME ---------- .00000E+00
FINAL TIME ---------- .10000E+01
DISPLACEMENT TOLERANCE ------ .30000E-04
FORCE TOLERANCE ---------- .10000E-01

CORE STORAGE REQUIRED IS 22077 WORDS.

INITIAL STRESSES

ELEMENT	SIGX	SIGY	SIGZ	SIGXY
1	.00000	.00000	.00000	.00000
2	.00000	.00000	.00000	.00000
3	.00000	.00000	.00000	.00000
4	.00000	.00000	.00000	.00000
5	.00000	.00000	.00000	.00000
6	.00000	.00000	.00000	.00000
7	.00000	.00000	.00000	.00000
8	.00000	.00000	.00000	.00000
9	.00000	.00000	.00000	.00000
10	.00000	.00000	.00000	.00000
11	.00000	.00000	.00000	.00000
12	.00000	.00000	.00000	.00000
13	.00000	.00000	.00000	.00000
14	.00000	.00000	.00000	.00000
15	.00000	.00000	.00000	.00000
16	.00000	.00000	.00000	.00000
17	.00000	.00000	.00000	.00000
18	.00000	.00000	.00000	.00000
19	.00000	.00000	.00000	.00000
20	.00000	.00000	.00000	.00000
21	.00000	.00000	.00000	.00000
22	.00000	.00000	.00000	.00000
23	.00000	.00000	.00000	.00000
24	.00000	.00000	.00000	.00000
25	.00000	.00000	.00000	.00000
26	.00000	.00000	.00000	.00000
27	.00000	.00000	.00000	.00000
28	.00000	.00000	.00000	.00000
29	.00000	.00000	.00000	.00000
30	.00000	.00000	.00000	.00000
31	.00000	.00000	.00000	.00000
32	.00000	.00000	.00000	.00000
33	.00000	.00000	.00000	.00000
34	.00000	.00000	.00000	.00000
35	.00000	.00000	.00000	.00000
36	.00000	.00000	.00000	.00000
37	.00000	.00000	.00000	.00000
38	.00000	.00000	.00000	.00000
39	.00000	.00000	.00000	.00000
40	.00000	.00000	.00000	.00000
41	.00000	.00000	.00000	.00000
42	.00000	.00000	.00000	.00000
43	.00000	.00000	.00000	.00000
44	.00000	.00000	.00000	.00000
45	.00000	.00000	.00000	.00000
46	.00000	.00000	.00000	.00000
47	.00000	.00000	.00000	.00000
48	.00000	.00000	.00000	.00000
49	.00000	.00000	.00000	.00000
50	.00000	.00000	.00000	.00000
51	.00000	.00000	.00000	.00000
52	.00000	.00000	.00000	.00000
53	.00000	.00000	.00000	.00000
54	.00000	.00000	.00000	.00000
55	.00000	.00000	.00000	.00000
56	.00000	.00000	.00000	.00000
57	.00000	.00000	.00000	.00000

58	.00000	.00000	.00000	.00000
59	.00000	.00000	.00000	.00000
60	.00000	.00000	.00000	.00000
61	.00000	.00000	.00000	.00000
62	.00000	.00000	.00000	.00000
63	.00000	.00000	.00000	.00000
64	.00000	.00000	.00000	.00000
65	.00000	.00000	.00000	.00000
66	.00000	.00000	.00000	.00000
67	.00000	.00000	.00000	.00000
68	.00000	.00000	.00000	.00000
69	.00000	.00000	.00000	.00000
70	.00000	.00000	.00000	.00000
71	.00000	.00000	.00000	.00000
72	.00000	.00000	.00000	.00000
73	.00000	.00000	.00000	.00000
74	.00000	.00000	.00000	.00000
75	.00000	.00000	.00000	.00000
76	.00000	.00000	.00000	.00000
77	.00000	.00000	.00000	.00000
78	.00000	.00000	.00000	.00000
79	.00000	.00000	.00000	.00000
80	.00000	.00000	.00000	.00000
81	.00000	.00000	.00000	.00000
82	.00000	.00000	.00000	.00000
83	.00000	.00000	.00000	.00000
84	.00000	.00000	.00000	.00000
85	.00000	.00000	.00000	.00000
86	.00000	.00000	.00000	.00000
87	.00000	.00000	.00000	.00000
88	.00000	.00000	.00000	.00000
89	.00000	.00000	.00000	.00000
90	.00000	.00000	.00000	.00000
91	.00000	.00000	.00000	.00000
92	.00000	.00000	.00000	.00000
93	.00000	.00000	.00000	.00000
94	.00000	.00000	.00000	.00000
95	.00000	.00000	.00000	.00000
96	.00000	.00000	.00000	.00000
97	.00000	.00000	.00000	.00000
98	.00000	.00000	.00000	.00000
99	.00000	.00000	.00000	.00000
100	.00000	.00000	.00000	.00000
101	.00000	.00000	.00000	.00000
102	.00000	.00000	.00000	.00000
103	.00000	.00000	.00000	.00000
104	.00000	.00000	.00000	.00000
105	.00000	.00000	.00000	.00000
106	.00000	.00000	.00000	.00000
107	.00000	.00000	.00000	.00000
108	.00000	.00000	.00000	.00000
109	.00000	.00000	.00000	.00000
110	.00000	.00000	.00000	.00000
111	.00000	.00000	.00000	.00000
112	.00000	.00000	.00000	.00000
113	.00000	.00000	.00000	.00000
114	.00000	.00000	.00000	.00000
115	.00000	.00000	.00000	.00000
116	.00000	.00000	.00000	.00000
117	.00000	.00000	.00000	.00000
118	.00000	.00000	.00000	.00000
119	.00000	.00000	.00000	.00000
120	.00000	.00000	.00000	.00000
121	.00000	.00000	.00000	.00000
122	.00000	.00000	.00000	.00000
123	.00000	.00000	.00000	.00000
124	.00000	.00000	.00000	.00000
125	.00000	.00000	.00000	.00000
126	.00000	.00000	.00000	.00000
127	.00000	.00000	.00000	.00000
128	.00000	.00000	.00000	.00000
129	.00000	.00000	.00000	.00000
130	.00000	.00000	.00000	.00000
131	.00000	.00000	.00000	.00000
132	.00000	.00000	.00000	.00000
133	.00000	.00000	.00000	.00000
134	.00000	.00000	.00000	.00000
135	.00000	.00000	.00000	.00000
136	.00000	.00000	.00000	.00000
137	.00000	.00000	.00000	.00000
138	.00000	.00000	.00000	.00000
139	.00000	.00000	.00000	.00000
140	.00000	.00000	.00000	.00000
141	.00000	.00000	.00000	.00000
142	.00000	.00000	.00000	.00000
143	.00000	.00000	.00000	.00000
144	.00000	.00000	.00000	.00000
145	.00000	.00000	.00000	.00000
146	.00000	.00000	.00000	.00000
147	.00000	.00000	.00000	.00000
148	.00000	.00000	.00000	.00000
149	.00000	.00000	.00000	.00000
150	.00000	.00000	.00000	.00000
151	.00000	.00000	.00000	.00000
152	.00000	.00000	.00000	.00000
153	.00000	.00000	.00000	.00000
154	.00000	.00000	.00000	.00000
155	.00000	.00000	.00000	.00000
156	.00000	.00000	.00000	.00000
157	.00000	.00000	.00000	.00000
158	.00000	.00000	.00000	.00000
159	.00000	.00000	.00000	.00000
160	.00000	.00000	.00000	.00000
161	.00000	.00000	.00000	.00000
162	.00000	.00000	.00000	.00000
163	.00000	.00000	.00000	.00000

164	.00000	.00000	.00000	.00000
165	.00000	.00000	.00000	.00000
166	.00000	.00000	.00000	.00000
167	.00000	.00000	.00000	.00000
168	.00000	.00000	.00000	.00000
169	.00000	.00000	.00000	.00000
170	.00000	.00000	.00000	.00000
171	.00000	.00000	.00000	.00000
172	.00000	.00000	.00000	.00000
173	.00000	.00000	.00000	.00000
174	.00000	.00000	.00000	.00000
175	.00000	.00000	.00000	.00000
176	.00000	.00000	.00000	.00000
177	.00000	.00000	.00000	.00000
178	.00000	.00000	.00000	.00000
179	.00000	.00000	.00000	.00000
180	.00000	.00000	.00000	.00000
181	.00000	.00000	.00000	.00000
182	.00000	.00000	.00000	.00000
183	.00000	.00000	.00000	.00000
184	.00000	.00000	.00000	.00000
185	.00000	.00000	.00000	.00000
186	.00000	.00000	.00000	.00000
187	.00000	.00000	.00000	.00000
188	.00000	.00000	.00000	.00000
189	.00000	.00000	.00000	.00000
190	.00000	.00000	.00000	.00000
191	.00000	.00000	.00000	.00000
192	.00000	.00000	.00000	.00000
193	.00000	.00000	.00000	.00000
194	.00000	.00000	.00000	.00000
195	.00000	.00000	.00000	.00000
196	.00000	.00000	.00000	.00000
197	.00000	.00000	.00000	.00000
198	.00000	.00000	.00000	.00000
199	.00000	.00000	.00000	.00000
200	.00000	.00000	.00000	.00000
201	.00000	.00000	.00000	.00000
202	.00000	.00000	.00000	.00000
203	.00000	.00000	.00000	.00000
204	.00000	.00000	.00000	.00000
205	.00000	.00000	.00000	.00000
206	.00000	.00000	.00000	.00000
207	.00000	.00000	.00000	.00000
208	.00000	.00000	.00000	.00000
209	.00000	.00000	.00000	.00000
210	.00000	.00000	.00000	.00000
211	.00000	.00000	.00000	.00000
212	.00000	.00000	.00000	.00000
213	.00000	.00000	.00000	.00000
214	.00000	.00000	.00000	.00000
215	.00000	.00000	.00000	.00000
21	.00000	.00000	.00000	.00000
217	.00000	.00000	.00000	.00000
218	.00000	.00000	.00000	.00000
219	.00000	.00000	.00000	.00000
220	.00000	.00000	.00000	.00000
221	.00000	.00000	.00000	.00000
222	.00000	.00000	.00000	.00000
223	.00000	.00000	.00000	.00000
224	.00000	.00000	.00000	.00000
225	.00000	.00000	.00000	.00000
226	.00000	.00000	.00000	.00000
227	.00000	.00000	.00000	.00000
228	.00000	.00000	.00000	.00000
229	.00000	.00000	.00000	.00000
230	.00000	.00000	.00000	.00000
231	.00000	.00000	.00000	.00000
232	.00000	.00000	.00000	.00000
233	.00000	.00000	.00000	.00000
234	.00000	.00000	.00000	.00000
235	.00000	.00000	.00000	.00000
236	.00000	.00000	.00000	.00000
237	.00000	.00000	.00000	.00000
238	.00000	.00000	.00000	.00000
239	.00000	.00000	.00000	.00000
240	.00000	.00000	.00000	.00000
241	.00000	.00000	.00000	.00000
242	.00000	.00000	.00000	.00000
243	.00000	.00000	.00000	.00000
244	.00000	.00000	.00000	.00000
245	.00000	.00000	.00000	.00000
246	.00000	.00000	.00000	.00000
247	.00000	.00000	.00000	.00000
248	.00000	.00000	.00000	.00000
249	.00000	.00000	.00000	.00000
250	.00000	.00000	.00000	.00000
251	.00000	.00000	.00000	.00000
252	.00000	.00000	.00000	.00000
253	.00000	.00000	.00000	.00000
254	.00000	.00000	.00000	.00000
255	.00000	.00000	.00000	.00000
256	.00000	.00000	.00000	.00000
257	.00000	.00000	.00000	.00000
258	.00000	.00000	.00000	.00000
259	.00000	.00000	.00000	.00000
260	.00000	.00000	.00000	.00000
261	.00000	.00000	.00000	.00000
262	.00000	.00000	.00000	.00000
263	.00000	.00000	.00000	.00000
264	.00000	.00000	.00000	.00000
265	.00000	.00000	.00000	.00000
266	.00000	.00000	.00000	.00000
267	.00000	.00000	.00000	.00000
268	.00000	.00000	.00000	.00000
269	.00000	.00000	.00000	.00000

270	.00000	.00000	.00000	.00000
271	.00000	.00000	.00000	.00000
272	.00000	.00000	.00000	.00000
273	.00000	.00000	.00000	.00000
274	.00000	.00000	.00000	.00000
275	.00000	.00000	.00000	.00000
276	.00000	.00000	.00000	.00000
277	.00000	.00000	.00000	.00000
278	.00000	.00000	.00000	.00000
279	.00000	.00000	.00000	.00000
280	.00000	.00000	.00000	.00000
281	.00000	.00000	.00000	.00000
282	.00000	.00000	.00000	.00000
283	.00000	.00000	.00000	.00000
284	.00000	.00000	.00000	.00000
285	.00000	.00000	.00000	.00000
286	.00000	.00000	.00000	.00000
287	.00000	.00000	.00000	.00000
288	.00000	.00000	.00000	.00000
289	.00000	.00000	.00000	.00000
290	.00000	.00000	.00000	.00000
291	.00000	.00000	.00000	.00000
292	.00000	.00000	.00000	.00000
293	.00000	.00000	.00000	.00000
294	.00000	.00000	.00000	.00000
295	.00000	.00000	.00000	.00000
296	.00000	.00000	.00000	.00000
297	.00000	.00000	.00000	.00000
298	.00000	.00000	.00000	.00000
299	.00000	.00000	.00000	.00000
300	.00000	.00000	.00000	.00000
301	.00000	.00000	.00000	.00000
302	.00000	.00000	.00000	.00000
303	.00000	.00000	.00000	.00000
304	.00000	.00000	.00000	.00000

jac verification v shaft BONDED 1/30/89 Low tol. TIME 00:00:00 DATE 00/00/00 JFT 2.0 01/30/88

SOLUTION TIME = .10000E+01

OUTPUT FOR LOAD INCREMENT 1

```
SUM OF X OR R REACTIONS ---------------     -.11294E+03
SUM OF Y OR Z REACTIONS ---------------     -.42077E+02
NORM OF APPLIED FORCES ----------------      .17062E+04
RESIDUAL FORCE NORM -------------------      .10355E+00
RESIDUAL FORCE TOLERANCE --------------      .77903E-02
INCREMENTAL DISPLACEMENT NORM ---------      .18605E-02
INCREMENTAL DISPLACEMENT TOLERANCE ----      .14957E-01
CPU TIME FOR LOAD STEP ----------------      .00000E+00
TOTAL CPU TIME ------------------------      .00000E+00
NUMBER ITERATIONS ON FIRST PASS -------  144
NUMBER OF ITERATIONS ON SECOND PASS ---    0
NODE4 PARAMETER -----------------------    1
TRIAL DISPLACEMENT FACTOR -------------      .10000E+01
```

jac verification v shaft BONDED 1/30/89 Low tol. TIME 00:00:00 DATE 00/00/00 JFT 2.0 01/30/88

SOLUTION TIME = .10000E+01

NODE	X	Y	UX	UY
1	.15060E+01	.15060E+01	-.13374E-02	-.10846E-03
2	.16490E+01	.13440E+01	-.15073E-02	-.12921E-03
3	.17730E+01	.11740E+01	-.16594E-02	-.13841E-03
4	.18780E+01	.99800E+00	-.17910E-02	-.13636E-03
5	.19660E+01	.81300E+00	-.19017E-02	-.12378E-03
6	.20340E+01	.62100E+00	-.19907E-02	-.10191E-03
7	.20850E+01	.42200E+00	-.20573E-02	-.73551E-04
8	.21170E+01	.21500E+00	-.20995E-02	-.38456E-04
9	.21300E+01	.00000E+00	-.21150E-02	.00000E+00
10	.16440E+01	.16440E+01	-.13226E-02	-.12594E-03
11	.17850E+01	.14650E+01	-.14880E-02	-.14492E-03
12	.19080E+01	.12780E+01	-.16418E-02	-.15421E-03
13	.20130E+01	.10830E+01	-.17784E-02	-.15128E-03
14	.20990E+01	.88200E+00	-.18934E-02	-.13616E-03
15	.21670E+01	.67200E+00	-.19879E-02	-.11235E-03
16	.22170E+01	.45600E+00	-.20582E-02	-.80613E-04
17	.22490E+01	.23200E+00	-.21026E-02	-.42672E-04
18	.22620E+01	.00000E+00	-.21181E-02	.00000E+00
19	.18240E+01	.18240E+01	-.13251E-02	-.13988E-03
20	.19630E+01	.16220E+01	-.14846E-02	-.15865E-03
21	.20840E+01	.14120E+01	-.16356E-02	-.16740E-03
22	.21880E+01	.11950E+01	-.17736E-02	-.16322E-03
23	.22730E+01	.97100E+00	-.18932E-02	-.14845E-03
24	.23400E+01	.73900E+00	-.19912E-02	-.12243E-03
25	.23890E+01	.50000E+00	-.20657E-02	-.87977E-04
26	.24200E+01	.25400E+00	-.21125E-02	-.46753E-04
27	.24330E+01	.00000E+00	-.21292E-02	.00000E+00
28	.20570E+01	.20570E+01	-.13555E-02	-.15157E-03
29	.21940E+01	.18260E+01	-.15045E-02	-.16935E-03
30	.23130E+01	.15860E+01	-.16498E-02	-.17600E-03
31	.24150E+01	.13400E+01	-.17855E-02	-.17360E-03
32	.24990E+01	.10860E+01	-.19065E-02	-.15761E-03
33	.25640E+01	.82600E+00	-.20069E-02	-.13052E-03
34	.26130E+01	.55800E+00	-.20847E-02	-.94360E-04
35	.26430E+01	.28200E+00	-.21341E-02	-.49260E-04
36	.26560E+01	.00000E+00	-.21505E-02	.00000E+00
37	.23610E+01	.23610E+01	-.14169E-02	-.16266E-03
38	.24350E+01	.20910E+01	-.15582E-02	-.17585E-03
39	.26110E+01	.18130E+01	-.16939E-02	-.18254E-03
40	.27100E+01	.15280E+01	-.18240E-02	-.17801E-03
41	.27920E+01	.12370E+01	-.19433E-02	-.16332E-03
42	.28560E+01	.93800E+00	-.20443E-02	-.13723E-03
43	.29030E+01	.63200E+00	-.21233E-02	-.97981E-04
44	.29330E+01	.32000E+00	-.21741E-02	-.52730E-04
45	.29460E+01	.00000E+00	-.21920E-02	.00000E+00
46	.23560E+01	.27560E+01	-.15255E-02	-.17180E-03
47	.28850E+01	.24350E+01	-.16526E-02	-.18316E-03
48	.29980E+01	.21080E+01	-.17797E-02	-.18560E-03
56	.33930E+01	.28830E+01	-.18045E-02	-.19120E-03
57	.35010E+01	.24910E+01	-.19200E-02	-.19150E-03
58	.35930E+01	.20920E+01	-.20329E-02	-.18463E-03
59	.36690E+01	.16870E+01	-.21399E-02	-.16763E-03
60	.37290E+01	.12750E+01	-.22342E-02	-.14026E-03
61	.37720E+01	.85600E+00	-.23099E-02	-.10105E-03
62	.38000E+01	.43100E+00	-.23587E-02	-.54270E-04
63	.38120E+01	.00000E+00	-.23771E-02	.00000E+00
64	.39360E+01	.39360E+01	-.19251E-02	-.20553E-03
65	.40530E+01	.34660E+01	-.20264E-02	-.20556E-03
66	.41550E+01	.29890E+01	-.21303E-02	-.19937E-03
67	.42420E+01	.25060E+01	-.22341E-02	-.18901E-03
68	.43130E+01	.20170E+01	-.23318E-02	-.17148E-03
69	.43700E+01	.15220E+01	-.24194E-02	-.14253E-03
70	.44110E+01	.10210E+01	-.24906E-02	-.10378E-03
71	.44370E+01	.51400E+00	-.25374E-02	-.54211E-04
72	.44480E+01	.00000E+00	-.25541E-02	.00000E+00
73	.48040E+01	.48040E+01	-.22501E-02	-.23593E-03
74	.49110E+01	.42230E+01	-.23430E-02	-.22566E-03
75	.50050E+01	.36370E+01	-.24329E-02	-.21626E-03
76	.50850E+01	.30450E+01	-.25244E-02	-.20080E-03
77	.51510E+01	.24470E+01	-.26133E-02	-.17833E-03
78	.52030E+01	.18440E+01	-.26932E-02	-.14774E-03
79	.52410E+01	.12350E+01	-.27583E-02	-.10628E-03
80	.52650E+01	.62000E+00	-.28023E-02	-.56519E-04
81	.52750E+01	.00000E+00	-.28187E-02	.00000E+00
82	.59310E+01	.59310E+01	-.26923E-02	-.27758E-03
83	.60270E+01	.52070E+01	-.27709E-02	-.26080E-03
84	.61100E+01	.44790E+01	-.28533E-02	-.24040E-03
85	.61820E+01	.37450E+01	-.29326E-02	-.21885E-03
86	.62400E+01	.30060E+01	-.30100E-02	-.19211E-03
87	.62860E+01	.22620E+01	-.30819E-02	-.15530E-03
88	.63200E+01	.15130E+01	-.31407E-02	-.11133E-03
89	.63420E+01	.75900E+00	-.31800E-02	-.58469E-04
90	.63510E+01	.00000E+00	-.31942E-02	.00000E+00
91	.73970E+01	.73970E+01	-.32799E-02	-.34081E-03
92	.74770E+01	.64870E+01	-.33483E-02	-.31081E-03
93	.75470E+01	.55730E+01	-.34171E-02	-.28379E-03
94	.76070E+01	.46550E+01	-.34893E-02	-.24998E-03
95	.76560E+01	.37320E+01	-.35572E-02	-.21306E-03
96	.76950E+01	.28060E+01	-.36191E-02	-.17275E-03
97	.77230E+01	.18750E+01	-.36709E-02	-.12956E-03
98	.77410E+01	.93900E+00	-.37061E-02	-.61676E-04
99	.77490E+01	.00000E+00	-.37197E-02	.00000E+00
100	.93020E+01	.93020E+01	-.40400E-02	-.44362E-03
101	.93630E+01	.81510E+01	-.41036E-02	-.39804E-03
102	.94150E+01	.69960E+01	-.41656E-02	-.34890E-03
103	.94600E+01	.58380E+01	-.42267E-02	-.30431E-03

49	.30940E+01	.17730E+01	-.19026E-02	-.18120E-03
50	.31730E+01	.14320E+01	-.20162E-02	-.16571E-03
51	.32360E+01	.10840E+01	-.21162E-02	-.13887E-03
52	.32810E+01	.73000E+00	-.21926E-02	-.10194E-03
53	.33100E+01	.36800E+00	-.22440E-02	-.53108E-04
54	.33220E+01	.00000E+00	-.22614E-02	.00000E+00
55	.32690E+01	.32690E+01	-.16884E-02	-.18953E-03

jac verification v shaft BONDED 1/30/89 Low tol.

SOLUTION TIME = .10000E+01

NODE	X	Y	UX	UY
111	.11843E+02	.88450E+01	-.51367E-02	-.46689E-03
112	.11869E+02	.73760E+01	-.51958E-02	-.39594E-03
113	.11889E+02	.59040E+01	-.52513E-02	-.32544E-03
114	.11906E+02	.44310E+01	-.53069E-02	-.25177E-03
115	.11918E+02	.29560E+01	-.53559E-02	-.16730E-03
116	.11925E+02	.14790E+01	-.53886E-02	-.82245E-04
117	.11929E+02	.00000E+00	-.54001E-02	.00000E+00
118	.15000E+02	.15000E+02	-.63127E-02	-.81174E-03
119	.15000E+02	.13125E+02	-.63595E-02	-.72771E-03
120	.15000E+02	.11250E+02	-.64035E-02	-.64365E-03
121	.15000E+02	.93750E+01	-.64533E-02	-.56268E-03
122	.15000E+02	.75000E+01	-.65106E-02	-.47161E-03
123	.15000E+02	.56250E+01	-.65648E-02	-.37097E-03
124	.15000E+02	.37500E+01	-.66155E-02	-.26344E-03
125	.15000E+02	.18750E+01	-.66559E-02	-.13888E-03
126	.15000E+02	.00000E+00	-.66731E-02	.00000E+00
127	.13440E+01	.16490E+01	-.11632E-02	-.79065E-04
128	.14650E+01	.17850E+01	-.11525E-02	-.95112E-04
129	.16220E+01	.19630E+01	-.11599E-02	-.11062E-03
130	.18260E+01	.21940E+01	-.11874E-02	-.12430E-03
131	.20910E+01	.24950E+01	-.12466E-02	-.13885E-03
132	.24350E+01	.28850E+01	-.13405E-02	-.15410E-03
133	.28830E+01	.33930E+01	-.14866E-02	-.16982E-03
134	.34660E+01	.40530E+01	-.16923E-02	-.19495E-03
135	.42230E+01	.49110E+01	-.19800E-02	-.22300E-03
136	.52070E+01	.60270E+01	-.23628E-02	-.26999E-03
137	.64870E+01	.74770E+01	-.28792E-02	-.32944E-03
138	.81510E+01	.93630E+01	-.35447E-02	-.42563E-03
139	.10313E+02	.11814E+02	-.44080E-02	-.56733E-03
140	.13125E+02	.15000E+02	-.55240E-02	-.76369E-03
141	.11740E+01	.17730E+01	-.98984E-03	-.47782E-04
142	.12780E+01	.19080E+01	-.98466E-03	-.61655E-04
143	.14120E+01	.20840E+01	-.99212E-03	-.76082E-04
144	.15860E+01	.23130E+01	-.10189E-02	-.91584E-04
145	.18130E+01	.26110E+01	-.10696E-02	-.10731E-03
146	.21080E+01	.29980E+01	-.11535E-02	-.12648E-03
147	.24910E+01	.35010E+01	-.12770E-02	-.14828E-03
148	.29890E+01	.41550E+01	-.14564E-02	-.17323E-03
149	.36370E+01	.50050E+01	-.17021E-02	-.20915E-03
150	.44790E+01	.61100E+01	-.20329E-02	-.25369E-03
151	.55730E+01	.75470E+01	-.24714E-02	-.31794E-03
152	.69960E+01	.94150E+01	-.30462E-02	-.40420E-03
153	.88450E+01	.11843E+02	-.37797E-02	-.53926E-03
154	.11250E+02	.15000E+02	-.47351E-02	-.72386E-03
155	.99800E+00	.18780E+01	-.82271E-03	-.18901E-04
156	.10830E+01	.20130E+01	-.81877E-03	-.28111E-04
157	.11950E+01	.21880E+01	-.82643E-03	-.40858E-04
158	.13400E+01	.24150E+01	-.84984E-03	-.55727E-04
159	.15280E+01	.27100E+01	-.89195E-03	-.73895E-04
160	.17730E+01	.30940E+01	-.96199E-03	-.93836E-04
161	.20920E+01	.35930E+01	-.10669E-02	-.11936E-03
162	.25060E+01	.42420E+01	-.12152E-02	-.14968E-03
163	.30450E+01	.50850E+01	-.14218E-02	-.18668E-03
164	.37450E+01	.61820E+01	-.16961E-02	-.23649E-03
165	.46550E+01	.76070E+01	-.20618E-02	-.29904E-03

jac verification v shaft BONDED 1/30/89 Low tol.

SOLUTION TIME = .10000E+01

NODE	X	Y	UX	UY
221	.93900E+00	.77410E+01	-.41060E-03	-.22173E-03
222	.11740E+01	.95600E+01	-.50837E-03	-.30839E-03
223	.14790E+01	.11925E+02	-.63018E-03	-.41700E-03
224	.18750E+01	.15000E+02	-.78280E-03	-.55660E-03
225	.00000E+00	.21300E+01	.00000E+00	.49647E-04
226	.00000E+00	.22620E+01	.00000E+00	.56005E-04
227	.00000E+00	.24330E+01	.00000E+00	.56951E-04
228	.00000E+00	.26560E+01	.00000E+00	.54588E-04
229	.00000E+00	.29460E+01	.00000E+00	.43324E-04
230	.00000E+00	.33220E+01	.00000E+00	.24651E-04
231	.00000E+00	.38120E+01	.00000E+00	-.40124E-05
232	.00000E+00	.44480E+01	.00000E+00	-.40320E-04
233	.00000E+00	.52750E+01	.00000E+00	-.86777E-04
234	.00000E+00	.63510E+01	.00000E+00	-.14538E-03
235	.00000E+00	.77490E+01	.00000E+00	-.21622E-03
236	.00000E+00	.95660E+01	.00000E+00	-.30394E-03
237	.00000E+00	.11929E+02	.00000E+00	-.41100E-03
238	.00000E+00	.15000E+02	.00000E+00	-.54989E-03
239	.20800E+01	.00000E+00	-.21143E-02	.00000E+00
240	.20670E+01	.20600E+00	-.20999E-02	-.34211E-04
241	.20360E+01	.40500E+00	-.20602E-02	-.65440E-04
242	.19870E+01	.59800E+00	-.19969E-02	-.90402E-04
243	.19200E+01	.78500E+00	-.19117E-02	-.11002E-03
244	.18340E+01	.96600E+00	-.18042E-02	-.12023E-03
245	.17310E+01	.11400E+01	-.16751E-02	-.12260E-03
246	.16100E+01	.13080E+01	-.15238E-02	-.11324E-03
247	.14700E+01	.14700E+01	-.13532E-02	-.94535E-04
248	.20300E+01	.00000E+00	-.21140E-02	.00000E+00
249	.20170E+01	.19700E+00	-.21007E-02	-.29928E-04
250	.19870E+01	.38900E+00	-.20629E-02	-.56631E-04
251	.19390E+01	.57500E+00	-.20032E-02	-.78920E-04
252	.18740E+01	.75700E+00	-.19217E-02	-.95373E-04
253	.17900E+01	.93400E+00	-.18185E-02	-.10473E-03
254	.16890E+01	.11050E+01	-.16931E-02	-.10518E-03
255	.15700E+01	.12720E+01	-.15425E-02	-.96305E-04
256	.14340E+01	.14340E+01	-.13702E-02	-.79056E-04
257	.19800E+01	.00000E+00	-.21142E-02	.00000E+00
258	.19680E+01	.18800E+00	-.21017E-02	-.25329E-04

104	.94970E+01	.46770E+01	-.42891E-02	-.25358E-03
105	.95260E+01	.35120E+01	-.43467E-02	-.19366E-03
106	.95470E+01	.23450E+01	-.43932E-02	-.13778E-03
107	.95600E+01	.11740E+01	-.44235E-02	-.72522E-04
108	.95660E+01	.00000E+00	-.44355E-02	.00000E+00
109	.11780E+02	.11780E+02	-.50324E-02	-.59296E-03
110	.11814E+02	.10313E+02	-.50823E-02	-.53023E-03

TIME 00:00:00 DATE 00/00/00 JFT 2.0 01/30/88

NODE	X	Y	UX	UY
166	.58380E+01	.94600E+01	-.25411E-02	-.38635E-03
167	.73760E+01	.11869E+02	-.31539E-02	-.50954E-03
168	.93750E+01	.15000E+02	-.39403E-02	-.68538E-03
169	.81300E+00	.19660E+01	-.65732E-03	.76693E-05
170	.88200E+00	.20990E+01	-.65711E-03	.20659E-05
171	.97100E+00	.22730E+01	-.66256E-03	-.84330E-05
172	.10860E+01	.24990E+01	-.68065E-03	-.20865E-04
173	.12370E+01	.27920E+01	-.71499E-03	-.38180E-04
174	.14320E+01	.31730E+01	-.76959E-03	-.60757E-04
175	.16870E+01	.36690E+01	-.85357E-03	-.86711E-04
176	.20170E+01	.43130E+01	-.97309E-03	-.12106E-03
177	.24470E+01	.51510E+01	-.11378E-02	-.16223E-03
178	.30060E+01	.62400E+01	-.13577E-02	-.21330E-03
179	.37320E+01	.76560E+01	-.16494E-02	-.27942E-03
180	.46770E+01	.94970E+01	-.20340E-02	-.36385E-03
181	.59040E+01	.11889E+02	-.25248E-02	-.48211E-03
182	.75000E+01	.15000E+02	-.31462E-02	-.64606E-03
183	.62100E+00	.20340E+01	-.49585E-03	.27601E-04
184	.67200E+00	.21670E+01	-.49546E-03	.25496E-04
185	.73900E+00	.23400E+01	-.50005E-03	.20534E-04
186	.82600E+00	.25640E+01	-.51244E-03	.94950E-05
187	.93800E+00	.28560E+01	-.53776E-03	-.56586E-05
188	.10840E+01	.32360E+01	-.57746E-03	-.27972E-04
189	.12750E+01	.37290E+01	-.63961E-03	-.56648E-04
190	.15220E+01	.43700E+01	-.73086E-03	-.90986E-04
191	.18440E+01	.52030E+01	-.85197E-03	-.13545E-03
192	.22620E+01	.62860E+01	-.10185E-02	-.18916E-03
193	.28060E+01	.76950E+01	-.12370E-02	-.25721E-03
194	.35120E+01	.95260E+01	-.15235E-02	-.34232E-03
195	.44310E+01	.11906E+02	-.18948E-02	-.45444E-03
196	.56250E+01	.15000E+02	-.23536E-02	-.61059E-03
197	.42200E+00	.20850E+01	-.33394E-03	.40879E-04
198	.45600E+00	.22170E+01	-.33342E-03	.42611E-04
199	.50000E+00	.23890E+01	-.33624E-03	.40357E-04
200	.55800E+00	.26130E+01	-.34468E-03	.33493E-04
201	.63200E+00	.29030E+01	-.35894E-03	.20242E-04
202	.73000E+00	.32810E+01	-.38693E-03	-.43666E-07
203	.85600E+00	.37720E+01	-.42654E-03	-.28228E-04
204	.10210E+01	.44110E+01	-.48702E-03	-.65607E-04
205	.12350E+01	.52410E+01	-.56855E-03	-.11067E-03
206	.15130E+01	.63200E+01	-.67804E-03	-.16747E-03
207	.18750E+01	.77230E+01	-.82524E-03	-.23581E-03
208	.22450E+01	.95470E+01	-.10143E-02	-.32316E-03
209	.27560E+01	.11918E+02	-.12638E-02	-.43257E-03
210	.37500E+01	.15000E+02	-.15648E-02	-.57782E-03
211	.21500E+00	.21170E+01	-.16875E-03	.47569E-04
212	.23200E+00	.22490E+01	-.16896E-03	.52399E-04
213	.25400E+00	.24200E+01	-.17030E-03	.53485E-04
214	.28200E+00	.26430E+01	-.17360E-03	.48497E-04
215	.32000E+00	.29330E+01	-.18139E-03	.37377E-04
216	.36800E+00	.33100E+01	-.19324E-03	.17837E-04
217	.43100E+00	.38000E+01	-.21453E-03	-.97083E-05
218	.51400E+00	.44370E+01	-.24398E-03	-.45991E-04
219	.62000E+00	.52650E+01	-.28481E-03	-.93542E-04
220	.75900E+00	.63420E+01	-.33999E-03	-.15103E-03

TIME 00:00:00 DATE 00/00/00 JFT 2.0 01/30/88

NODE	X	Y	UX	UY
276	.18690E+01	.17000E+00	-.21040E-02	-.15294E-04
277	.18410E+01	.33900E+00	-.20739E-02	-.29191E-04
278	.17960E+01	.50700E+00	-.20246E-02	-.40409E-04
279	.17350E+01	.67300E+00	-.19560E-02	-.47485E-04
280	.16580E+01	.83800E+00	-.18660E-02	-.49370E-04
281	.15640E+01	.10020E+01	-.17531E-02	-.45333E-04
282	.14530E+01	.11650E+01	-.16101E-02	-.36488E-04
283	.13260E+01	.13260E+01	-.14346E-02	-.26020E-04
284	.18300E+01	.00000E+00	-.21144E-02	.00000E+00
285	.18190E+01	.16100E+00	-.21053E-02	-.10114E-04
286	.17920E+01	.32200E+00	-.20779E-02	-.18843E-04
287	.17490E+01	.48400E+00	-.20325E-02	-.25909E-04
288	.16890E+01	.64500E+00	-.19685E-02	-.29516E-04
289	.16140E+01	.80600E+00	-.18839E-02	-.28185E-04
290	.15220E+01	.96700E+00	-.17752E-02	-.22720E-04
291	.14140E+01	.11290E+01	-.16388E-02	-.10757E-04
292	.12900E+01	.12900E+01	-.14623E-02	-.48827E-05
293	.11530E+01	.14140E+01	-.12923E-02	.16782E-05
294	.11850E+01	.14530E+01	-.12654E-02	-.12569E-04
295	.12170E+01	.14920E+01	-.12406E-02	-.27235E-04
296	.12480E+01	.15310E+01	-.12177E-02	-.40844E-04
297	.12800E+01	.15700E+01	-.11978E-02	-.53833E-04
298	.13120E+01	.16100E+01	-.11788E-02	-.66493E-04
299	.10090E+01	.15220E+01	-.11203E-02	.11778E-04
300	.10370E+01	.15640E+01	-.10913E-02	.17372E-06
301	.10640E+01	.16060E+01	-.10660E-02	-.97245E-05
302	.10920E+01	.16470E+01	-.10449E-02	-.19554E-04
303	.11190E+01	.16890E+01	-.10244E-02	-.29220E-04
304	.11470E+01	.17310E+01	-.10069E-02	-.38942E-04
305	.85800E+00	.16140E+01	-.94051E-03	.18034E-04
306	.88100E+00	.16580E+01	-.91517E-03	.12952E-04
307	.90500E+00	.17020E+01	-.89234E-03	.65469E-05
308	.92800E+00	.17460E+01	-.87193E-03	.49986E-06
309	.95100E+00	.17900E+01	-.85366E-03	-.57571E-05
310	.97400E+00	.18340E+01	-.83679E-03	-.11836E-04
311	.70000E+00	.16890E+01	-.75966E-03	.21729E-04
312	.71900E+00	.17350E+01	-.73785E-03	.21122E-04
313	.73800E+00	.17810E+01	-.71839E-03	.19558E-04

259	.19380E+01	.37200E+00	-.20662E-02	-.48055E-04
260	.18920E+01	.55200E+00	-.20102E-02	-.66524E-04
261	.18270E+01	.72900E+00	-.19326E-02	-.80179E-04
262	.17460E+01	.90200E+00	-.18335E-02	-.87134E-04
263	.16470E+01	.10710E+01	-.17110E-02	-.86670E-04
264	.15310E+01	.12360E+01	-.15628E-02	-.78359E-04
265	.13980E+01	.13980E+01	-.13895E-02	-.62779E-04
266	.19300E+01	.00000E+00	-.21140E-02	.00000E+00
267	.19180E+01	.17900E+00	-.21029E-02	-.20167E-04
268	.18900E+01	.35600E+00	-.20699E-02	-.38809E-04
269	.18440E+01	.53000E+00	-.20167E-02	-.53672E-04
270	.17810E+01	.70100E+00	-.19439E-02	-.64262E-04
271	.17020E+01	.87000E+00	-.18493E-02	-.68892E-04
272	.16060E+01	.10360E+01	-.17318E-02	-.66999E-04
273	.14920E+01	.12010E+01	-.15847E-02	-.58517E-04
274	.13620E+01	.13620E+01	-.14111E-02	-.45642E-04
275	.18800E+01	.00000E+00	-.21143E-02	.00000E+00

jac verification v shaft BONDED 1/30/89 Low tol.

SOLUTION TIME = .10000E+01

NODE	X	Y	UX	UY
331	.19500E+00	.19180E+01	-.18542E-03	.33276E-04
332	.20000E+00	.19680E+01	-.18074E-03	.38837E-04
333	.20500E+00	.20170E+01	-.17674E-03	.42720E-04
334	.21000E+00	.20670E+01	-.17251E-03	.45667E-04
335	.00000E+00	.18300E+01	.00000E+00	.18932E-04
336	.00000E+00	.18800E+01	.00000E+00	.27461E-04
337	.00000E+00	.19300E+01	.00000E+00	.34170E-04
338	.00000E+00	.19800E+01	.00000E+00	.39597E-04
339	.00000E+00	.20300E+01	.00000E+00	.43820E-04
340	.00000E+00	.20800E+01	.00000E+00	.47718E-04
341	.15060E+01	.15060E+01	-.13374E-02	-.10844E-03
342	.16490E+01	.13440E+01	-.15073E-02	-.12921E-03
343	.17730E+01	.11740E+01	-.16593E-02	-.13837E-03
344	.18780E+01	.99800E+00	-.17910E-02	-.13636E-03
345	.19660E+01	.81300E+00	-.19017E-02	-.12378E-03
346	.20340E+01	.62100E+00	-.19907E-02	-.10190E-03
347	.20850E+01	.42200E+00	-.20573E-02	-.73551E-04
348	.21170E+01	.21500E+00	-.20994E-02	-.38452E-04
349	.21300E+01	.00000E+00	-.21150E-02	.00000E+00
350	.13440E+01	.16490E+01	-.11632E-02	-.79068E-04
351	.11740E+01	.17730E+01	-.98991E-03	-.47869E-04
352	.99800E+00	.18780E+01	-.82270E-03	-.18892E-04
353	.81300E+00	.19660E+01	-.65733E-03	.76302E-05
354	.62100E+00	.20340E+01	-.49584E-03	.27616E-04
355	.42200E+00	.20850E+01	-.33393E-03	.40899E-04
356	.21500E+00	.21170E+01	-.16875E-03	.47647E-04
357	.00000E+00	.21300E+01	.00000E+00	.49593E-04

jac verification v shaft BONDED 1/30/89 Low tol.

SOLUTION TIME = .10000E+01

ELEMENT	SIGX	SIGY	SIGZ	SIGXY
1	-.77745E+01	-.20530E+01	-.21620E+01	.29831E+01
2	-.64300E+01	-.21064E+01	-.18780E+01	.31305E+01
3	-.51729E+01	-.23492E+01	-.16549E+01	.30418E+01
4	-.40072E+01	-.26231E+01	-.14587E+01	.27674E+01
5	-.30728E+01	-.28442E+01	-.13017E+01	.23581E+01
6	-.23124E+01	-.30357E+01	-.11766E+01	.18029E+01
7	-.17510E+01	-.32239E+01	-.10945E+01	.11426E+01
8	-.13737E+01	-.32903E+01	-.10261E+01	.39519E+00
9	-.80860E+01	-.18812E+01	-.21928E+01	.25188E+01
10	-.69655E+01	-.19785E+01	-.19677E+01	.27774E+01
11	-.57741E+01	-.22601E+01	-.17675E+01	.28620E+01
12	-.46706E+01	-.25913E+01	-.15976E+01	.26738E+01
13	-.36952E+01	-.29022E+01	-.14514E+01	.22949E+01
14	-.28835E+01	-.31492E+01	-.13272E+01	.17910E+01
15	-.23144E+01	-.33452E+01	-.12451E+01	.11329E+01
16	-.20355E+01	-.35133E+01	-.12207E+01	.38858E+00
17	-.82845E+01	-.18009E+01	-.22188E+01	.20061E+01
18	-.73822E+01	-.19503E+01	-.20532E+01	.23777E+01
19	-.63508E+01	-.21903E+01	-.18790E+01	.25374E+01
20	-.52904E+01	-.25492E+01	-.17247E+01	.24723E+01
21	-.43178E+01	-.29035E+01	-.15887E+01	.22025E+01
22	-.35259E+01	-.31819E+01	-.14757E+01	.17483E+01
23	-.29474E+01	-.34510E+01	-.14077E+01	.11311E+01
24	-.26053E+01	-.35917E+01	-.13633E+01	.38840E+00
25	-.83069E+01	-.18551E+01	-.22356E+01	.16073E+01
26	-.76423E+01	-.19706E+01	-.21148E+01	.19304E+01
27	-.67957E+01	-.21700E+01	-.19725E+01	.21595E+01
28	-.59022E+01	-.25007E+01	-.18486E+01	.22104E+01
29	-.49888E+01	-.28548E+01	-.17256E+01	.19900E+01
30	-.42135E+01	-.32254E+01	-.16365E+01	.16290E+01
31	-.36076E+01	-.34440E+01	-.15514E+01	.10629E+01
32	-.33231E+01	-.36399E+01	-.15319E+01	.34745E+00
33	-.82817E+01	-.19733E+01	-.22561E+01	.12251E+01
34	-.77578E+01	-.20657E+01	-.21612E+01	.15239E+01
35	-.71651E+01	-.22430E+01	-.20698E+01	.17511E+01
36	-.64159E+01	-.25008E+01	-.19617E+01	.18377E+01
37	-.56272E+01	-.28034E+01	-.18547E+01	.17452E+01
38	-.48980E+01	-.31620E+01	-.17732E+01	.14257E+01
39	-.43232E+01	-.34197E+01	-.17034E+01	.96016E+00
40	-.40142E+01	-.35849E+01	-.16716E+01	.33473E+00
41	-.81703E+01	-.21923E+01	-.22798E+01	.89057E+00
42	-.78470E+01	-.22186E+01	-.22144E+01	.11517E+01
43	-.73600E+01	-.23163E+01	-.21288E+01	.13396E+01
44	-.67956E+01	-.25537E+01	-.20568E+01	.14593E+01
45	-.61457E+01	-.28032E+01	-.19688E+01	.14221E+01
46	-.55273E+01	-.30778E+01	-.18931E+01	.12061E+01
47	-.50520E+01	-.33390E+01	-.18460E+01	.81936E+00
48	-.47776E+01	-.34906E+01	-.18190E+01	.28148E+00
49	-.80385E+01	-.23236E+01	-.22796E+01	.64966E+00
50	-.78129E+01	-.23484E+01	-.22355E+01	.84026E+00
51	-.75035E+01	-.24165E+01	-.21821E+01	.10139E+01
52	-.70852E+01	-.25772E+01	-.21257E+01	.11091E+01
53	-.65802E+01	-.28026E+01	-.20642E+01	.10937E+01
54	-.60913E+01	-.30385E+01	-.20086E+01	.94977E+00
55	-.56782E+01	-.32365E+01	-.19612E+01	.64214E+00

jac verification v shaft BONDED 1/30/89 Low tol.

314	.75700E+00	.18270E+01	-.70063E-03	.17634E-04
315	.77500E+00	.18740E+01	-.68361E-03	.14655E-04
316	.79400E+00	.19200E+01	-.67007E-03	.11309E-04
317	.53600E+00	.17490E+01	-.57512E-03	.23247E-04
318	.55000E+00	.17960E+01	-.55823E-03	.26656E-04
319	.56400E+00	.18440E+01	-.54253E-03	.28716E-04
320	.57800E+00	.18920E+01	-.52862E-03	.29562E-04
321	.59300E+00	.19390E+01	-.51726E-03	.29659E-0[illegible]
322	.60700E+00	.19870E+01	-.50537E-03	.28753E-04
323	.36400E+00	.17920E+01	-.38630E-03	.21064E-04
324	.37400E+00	.18410E+01	-.37672E-03	.27389E-04
325	.38300E+00	.18900E+01	-.36609E-03	.32530E-04
326	.39300E+00	.19380E+01	-.35724E-03	.35984E-04
327	.40200E+00	.19870E+01	-.34792E-03	.38649E-04
328	.41200E+00	.20360E+01	-.34075E-03	.40197E-04
329	.18500E+00	.18190E+01	-.19721E-03	.18710E-04
330	.19000E+00	.18690E+01	-.19073E-03	.26703E-04

TIME 00:00:00 DATE 00/00/00 JFT 2.0 01/30/88

NODE	X	Y	UX	UY

TIME 00:00:00 DATE 00/00/00 JFT 2.0 01/30/88

ELEMENT	SIGX	SIGY	SIGZ	SIGXY
56	-.54440E+01	-.33662E+01	-.19382E+01	.23563E+00
57	-.79523E+01	-.24556E+01	-.22897E+01	.44318E+00
58	-.78026E+01	-.24596E+01	-.22577E+01	.57307E+00
59	-.75914E+01	-.25251E+01	-.22256E+01	.71433E+00
60	-.72790E+01	-.26218E+01	-.21782E+01	.80684E+00
61	-.69181E+01	-.27913E+01	-.21361E+01	.81525E+00
62	-.65422E+01	-.29788E+01	-.20946E+01	.72036E+00
63	-.62251E+01	-.31599E+01	-.20647E+01	.49913E+00
64	-.60553E+01	-.32662E+01	-.20507E+01	.17461E+00
65	-.78557E+01	-.25788E+01	-.22956E+01	.30642E+00
66	-.77677E+01	-.25687E+01	-.22740E+01	.40176E+00
67	-.76302E+01	-.25973E+01	-.22501E+01	.49628E+00
68	-.74229E+01	-.26722E+01	-.22209E+01	.57288E+00
69	-.71681E+01	-.28068E+01	-.21945E+01	.59741E+00
70	-.68904E+01	-.29364E+01	-.21619E+01	.53108E+00
71	-.66470E+01	-.30661E+01	-.21369E+01	.37336E+00
72	-.64989E+01	-.31640E+01	-.21258E+01	.13586E+00
73	-.77760E+01	-.26691E+01	-.22979E+01	.19843E+00
74	-.77374E+01	-.26555E+01	-.22864E+01	.27002E+00
75	-.76546E+01	-.26974E+01	-.22774E+01	.34120E+00
76	-.75307E+01	-.27321E+01	-.22578E+01	.39716E+00
77	-.73480E+01	-.28044E+01	-.22335E+01	.41261E+00
78	-.71526E+01	-.29265E+01	-.22174E+01	.37393E+00
79	-.69826E+01	-.30224E+01	-.22011E+01	.27024E+00
80	-.68846E+01	-.30715E+01	-.21903E+01	.99541E-01
81	-.76843E+01	-.27692E+01	-.22998E+01	.12351E+00
82	-.76735E+01	-.27615E+01	-.22957E+01	.17409E+00
83	-.76325E+01	-.27604E+01	-.22864E+01	.23090E+00
84	-.75589E+01	-.28047E+01	-.22800E+01	.27170E+00
85	-.74668E+01	-.28544E+01	-.22707E+01	.29511E+00
86	-.73484E+01	-.29085E+01	-.22565E+01	.26888E+00
87	-.72307E+01	-.29797E+01	-.22463E+01	.17994E+00
88	-.71616E+01	-.30343E+01	-.22431E+01	.66175E-01
89	-.76014E+01	-.28150E+01	-.22916E+01	.64325E-01
90	-.75934E+01	-.28344E+01	-.22941E+01	.97327E-01
91	-.75941E+01	-.28498E+01	-.22976E+01	.13674E-00
92	-.75630E+01	-.28711E+01	-.22955E+01	.17566E+00
93	-.75131E+01	-.29170E+01	-.22946E+01	.19460E+00
94	-.74606E+01	-.29650E+01	-.22936E+01	.18886E+00
95	-.74110E+01	-.29967E+01	-.22897E+01	.14549E+00
96	-.73764E+01	-.30122E+01	-.22855E+01	.56302E-01
97	-.75463E+01	-.28337E+01	-.22836E+01	.75154E-02
98	-.75448E+01	-.28355E+01	-.22837E+01	.20093E-01
99	-.75451E+01	-.28566E+01	-.22884E+01	.40885E-01
100	-.75456E+01	-.29014E+01	-.22983E+01	.55714E-01
101	-.75344E+01	-.29583E+01	-.23084E+01	.70771E-01
102	-.75122E+01	-.30352E+01	-.23204E+01	.73867E-01
103	-.74983E+01	-.31142E+01	-.23347E+01	.51232E-01
104	-.75044E+01	-.31698E+01	-.23483E+01	.19399E-01
105	-.89299E+01	-.21213E+01	-.24313E+01	.26804E+01
106	-.90448E+01	-.19263E+01	-.24137E+01	.21443E+01
107	-.90716E+01	-.18576E+01	-.23890E+01	.16937E+01
108	-.88360E+01	-.19257E+01	-.23676E+01	.12841E+01
109	-.86346E+01	-.20407E+01	-.23486E+01	.98224E+00
110	-.84447E+01	-.21780E+01	-.23370E+01	.68833E+00

TIME 00:00:00 DATE 00/00/00 JFT 2.0 01/30/88

SOLUTION TIME = .10000E+01

ELEMENT	SIGX	SIGY	SIGZ	SIGXY	ELEMENT	SIGX	SIGY	SIGZ	SIGXY
111	-.82418E+01	-.22950E+01	-.23181E+01	.49607E+00	166	-.79591E+01	-.27917E+01	-.23652E+01	-.51181E-01
112	-.80625E+01	-.24444E+01	-.23115E+01	.34224E+00	167	-.78280E+01	-.27867E+01	-.23352E+01	-.41377E-01
113	-.79264E+01	-.25800E+01	-.23114E+01	.23211E+00	168	-.76924E+01	-.28019E+01	-.23087E+01	-.35359E-01
114	-.78211E+01	-.26575E+01	-.23053E+01	.14728E+00	169	-.75831E+01	-.28258E+01	-.22900E+01	-.13327E-01
115	-.76869E+01	-.27545E+01	-.22971E+01	.90175E-01	170	-.12453E+02	-.31870E+01	-.34407E+01	.10409E+01
116	-.76116E+01	-.28166E+01	-.22942E+01	.44196E-01	171	-.11667E+02	-.32130E+01	-.32736E+01	.71735E+00
117	-.75475E+01	-.28257E+01	-.22821E+01	.85760E-02	172	-.10883E+02	-.32497E+01	-.31092E+01	.41641E+00
118	-.99592E+01	-.24002E+01	-.27191E+01	.23532E+01	173	-.10231E+02	-.32045E+01	-.29559E+01	.17657E+00
119	-.98630E+01	-.21852E+01	-.26506E+01	.17787E+01	174	-.96413E+01	-.31771E+01	-.28201E+01	.86387E-02
120	-.95734E+01	-.20407E+01	-.25551E+01	.13559E+01	175	-.90993E+01	-.30950E+01	-.26827E+01	-.88255E-01
121	-.93039E+01	-.20267E+01	-.24927E+01	.98624E+00	176	-.87319E+01	-.30402E+01	-.25899E+01	-.13477E+00
122	-.89764E+01	-.20918E+01	-.24350E+01	.72045E+00	177	-.83932E+01	-.29805E+01	-.25022E+01	-.10825E+00
123	-.87040E+01	-.22117E+01	-.24014E+01	.53208E+00	178	-.81472E+01	-.29277E+01	-.24365E+01	-.10229E+00
124	-.84346E+01	-.23411E+01	-.23706E+01	.36251E+00	179	-.79554E+01	-.28790E+01	-.23836E+01	-.81396E-01
125	-.81924E+01	-.24483E+01	-.23410E+01	.24258E+00	180	-.78119E+01	-.28528E+01	-.23462E+01	-.57593E-01
126	-.80013E+01	-.25782E+01	-.23275E+01	.17102E+00	181	-.76900E+01	-.28312E+01	-.23147E+01	-.48512E-01
127	-.78704E+01	-.26490E+01	-.23143E+01	.10294E+00	182	-.75666E+01	-.28290E+01	-.22870E+01	-.19209E-01
128	-.77379E+01	-.27235E+01	-.23015E+01	.65408E-01	183	-.12748E+02	-.31003E+01	-.34866E+01	.69115E+00
129	-.76376E+01	-.27961E+01	-.22954E+01	.31927E-01	184	-.11891E+02	-.32609E+01	-.33335E+01	.44911E+00
130	-.75642E+01	-.28211E+01	-.22848E+01	.78730E-02	185	-.11087E+02	-.33793E+01	-.31826E+01	.24950E+00
131	-.10805E+02	-.26727E+01	-.29651E+01	.19889E+01	186	-.10307E+02	-.34000E+01	-.30156E+01	.10699E+00
132	-.10440E+02	-.24784E+01	-.28421E+01	.14466E+01	187	-.96834E+01	-.34020E+01	-.28788E+01	-.17291E-01
133	-.10063E+02	-.23413E+01	-.27290E+01	.10098E+01	188	-.91307E+01	-.33299E+01	-.27413E+01	-.80674E-01
134	-.96376E+01	-.22872E+01	-.26234E+01	.73013E+00	189	-.86094E+01	-.32371E+01	-.26238E+01	-.12226E+00
135	-.92634E+01	-.22999E+01	-.25439E+01	.48430E+00	190	-.83750E+01	-.31467E+01	-.25348E+01	-.11383E+00
136	-.88611E+01	-.23432E+01	-.24649E+01	.31302E+00	191	-.81099E+01	-.30534E+01	-.24559E+01	-.91797E-01
137	-.85523E+01	-.24230E+01	-.24146E+01	.21010E+00	192	-.79503E+01	-.29758E+01	-.24037E+01	-.67052E-01
138	-.82983E+01	-.25287E+01	-.23819E+01	.13150E+00	193	-.78007E+01	-.29188E+01	-.23583E+01	-.53225E-01
139	-.80813E+01	-.26031E+01	-.23506E+01	.94048E-01	194	-.76817E+01	-.28655E+01	-.23204E+01	-.43413E-01
140	-.79288E+01	-.26750E+01	-.23329E+01	.58928E-01	195	-.75446E+01	-.28328E+01	-.22830E+01	-.19387E-01
141	-.77875E+01	-.27248E+01	-.23127E+01	.31639E-01	196	-.12853E+02	-.29394E+01	-.34742E+01	.23499E+00
142	-.76558E+01	-.27975E+01	-.22997E+01	.21863E-01	197	-.12042E+02	-.32871E+01	-.33725E+01	.16622E+00
143	-.75786E+01	-.28213E+01	-.22880E+01	-.20146E-02	198	-.11181E+02	-.33984E+01	-.32075E+01	.88472E-01
144	-.11467E+02	-.28633E+01	-.31527E+01	.16358E+01	199	-.10396E+02	-.35261E+01	-.30629E+01	.21937E-01
145	-.10932E+02	-.28470E+01	-.30313E+01	.11605E+01	200	-.96797E+01	-.35200E+01	-.29039E+01	-.88085E-02
146	-.10436E+02	-.26709E+01	-.28834E+01	.75719E+00	201	-.91260E+01	-.34723E+01	-.27716E+01	-.39142E-01
147	-.99007E+01	-.25980E+01	-.27497E+01	.46793E+00	202	-.86912E+01	-.33483E+01	-.26487E+01	-.30573E-01
148	-.94441E+01	-.25658E+01	-.26422E+01	.27283E+00	203	-.83648E+01	-.32543E+01	-.25562E+01	-.42447E-01
149	-.90440E+01	-.25638E+01	-.25537E+01	.13934E+00	204	-.81227E+01	-.31422E+01	-.24783E+01	-.38131E-01
150	-.86651E+01	-.25985E+01	-.24780E+01	.52908E-01	205	-.79160E+01	-.30338E+01	-.24089E+01	-.24141E-01
151	-.83645E+01	-.26327E+01	-.24194E+01	.19871E-01	206	-.77803E+01	-.29553E+01	-.23618E+01	-.23752E-01
152	-.81325E+01	-.26823E+01	-.23793E+01	.12468E-01	207	-.76692E+01	-.28875E+01	-.23225E+01	-.13652E-01
153	-.79519E+01	-.27120E+01	-.23461E+01	.57092E-03	208	-.75313E+01	-.28440E+01	-.22826E+01	-.95500E-02
154	-.78092E+01	-.27463E+01	-.23222E+01	-.11129E-01	209	-.12046E+01	-.52041E+01	-.96131E+00	.53016E+00
155	-.76719E+01	-.27850E+01	-.23005E+01	-.86635E-02	210	-.14814E+01	-.52906E+01	-.10158E+01	.14626E+01
156	-.75867E+01	-.28235E+01	-.22902E+01	-.56504E-02	211	-.20538E+01	-.52341E+01	-.10932E+01	.22841E+01
157	-.12007E+02	-.31116E+01	-.33260E+01	.13357E+01	212	-.28372E+01	-.54430E+01	-.12420E+01	.31581E+01
158	-.11288E+02	-.30610E+01	-.31567E+01	.92362E+00	213	-.40245E+01	-.54975E+01	-.14283E+01	.39557E+01
159	-.10684E+02	-.29854E+01	-.30073E+01	.55288E+00	214	-.56326E+01	-.55826E+01	-.16823E+01	.48704E+01
160	-.10108E+02	-.29223E+01	-.28667E+01	.28536E+00	215	-.76160E+01	-.53846E+01	-.19501E+01	.55824E+01
161	-.95559E+01	-.28973E+01	-.27397E+01	.11089E+00	216	-.99567E+01	-.52830E+01	-.22860E+01	.60306E+01
162	-.91104E+01	-.28368E+01	-.26284E+01	.91251E-02	217	-.84635E+00	-.47606E+01	-.84105E+00	.49037E+00
163	-.87071E+01	-.28134E+01	-.25345E+01	-.66998E-01	218	-.12483E+01	-.48720E+01	-.91806E+00	.12775E+01
164	-.84027E+01	-.27972E+01	-.24640E+01	-.68556E-01	219	-.18499E+01	-.49549E+01	-.10207E+01	.20890E+01
165	-.81636E+01	-.27857E+01	-.24088E+01	-.63236E-01	220	-.26349E+01	-.51960E+01	-.11746E+01	.29442E+01

jac verification v shaft BONDED 1/30/89 Low tol. TIME 00:00:00 DATE 00/00/00 JFT 2.0 01/30/88

SOLUTION TIME = .10000E+01

ELEMENT	SIGX	SIGY	SIGZ	SIGXY	ELEMENT	SIGX	SIGY	SIGZ	SIGXY
221	-.35843E+01	-.52837E+01	-.13302E+01	.38703E+01	276	-.20611E+02	-.49868E+01	-.38396E+01	.86717E+01
222	-.48716E+01	-.54604E+01	-.15498E+01	.48593E+01	277	-.20074E+02	-.46438E+01	-.37077E+01	.76749E+01
223	-.68846E+01	-.55604E+01	-.18667E+01	.56719E+01	278	-.19690E+02	-.47190E+01	-.36613E+01	.67623E+01
224	-.94500E+01	-.56679E+01	-.22677E+01	.62408E+01	279	-.19173E+02	-.44992E+01	-.35509E+01	.60431E+01
225	-.59488E+00	-.42780E+01	-.73093E+00	.41493E+00	280	-.18717E+02	-.45595E+01	-.34914E+01	.53548E+01
226	-.98566E+00	-.43762E+01	-.80427E+00	.11962E+01	281	-.24506E+02	-.33697E+01	-.41814E+01	.85609E+01
227	-.14252E+01	-.45848E+01	-.90150E+00	.18895E+01	282	-.23548E+02	-.36393E+01	-.40781E+01	.75298E+01
228	-.20747E+01	-.49184E+01	-.10490E+01	.26881E+01	283	-.22597E+02	-.37460E+01	-.39515E+01	.66849E+01
229	-.30681E+01	-.52713E+01	-.12509E+01	.35484E+01	284	-.21769E+02	-.39553E+01	-.38586E+01	.58925E+01
230	-.44908E+01	-.56645E+01	-.15233E+01	.44917E+01	285	-.21089E+02	-.40872E+01	-.37764E+01	.52071E+01
231	-.64469E+01	-.58792E+01	-.18489E+01	.55914E+01	286	-.20426E+02	-.40250E+01	-.36676E+01	.46254E+01
232	-.89352E+01	-.60006E+01	-.22404E+01	.64536E+01	287	-.20161E+02	-.20897E+01	-.43876E+01	.65447E+01
233	-.15424E+00	-.37242E+01	-.64176E+00	.29663E+00	288	-.25646E+02	-.24389E+01	-.42127E+01	.59161E+01
234	-.68869E+00	-.39247E+01	-.69201E+00	.93228E+00	289	-.24523E+02	-.29319E+01	-.41182E+01	.52465E+01
235	-.11714E+01	-.42060E+01	-.80662E+00	.15753E+01	290	-.23526E+02	-.30999E+01	-.39940E+01	.46760E+01
236	-.17953E+01	-.46829E+01	-.97172E+00	.23761E+01	291	-.22611E+02	-.34586E+01	-.39105E+01	.41178E+01
237	-.25448E+01	-.50657E+01	-.11416E+01	.32539E+01	292	-.21786E+02	-.35539E+01	-.38010E+01	.35878E+01
238	-.36019E+01	-.55953E+01	-.13796E+01	.43032E+01	293	-.28422E+02	-.10018E+01	-.44136E+01	.41549E+01
239	-.55324E+01	-.61960E+01	-.17593E+01	.55068E+01	294	-.27209E+02	-.14488E+01	-.42986E+01	.38273E+01
240	-.82419E+01	-.65234E+01	-.22148E+01	.66591E+01	295	-.26000E+02	-.19728E+01	-.41960E+01	.34047E+01
241	-.27818E+00	-.30346E+01	-.49691E+00	.27136E+00	296	-.24830E+02	-.24381E+01	-.40903E+01	.30467E+01
242	-.45351E+00	-.33203E+01	-.56608E+00	.79388E+00	297	-.23822E+02	-.28314E+01	-.39980E+01	.27012E+01
243	-.68431E+00	-.37092E+01	-.65903E+00	.14020E+01	298	-.22521E+02	-.31879E+01	-.39163E+01	.24347E+01
244	-.11226E+01	-.42575E+01	-.80701E+00	.20959E+01	299	-.29523E+02	-.48766E+00	-.45016E+01	.15004E+01
245	-.19077E+01	-.48776E+01	-.10178E+01	.28962E+01	300	-.28005E+02	-.11044E+01	-.43665E+01	.12941E+01
246	-.28679E+01	-.56274E+01	-.12743E+01	.38810E+01	301	-.26668E+02	-.15621E+01	-.42344E+01	.11608E+01
247	-.45397E+01	-.65059E+01	-.16569E+01	.53067E+01	302	-.25515E+02	-.21579E+01	-.41509E+01	.10369E+01
248	-.75967E+01	-.73534E+01	-.22425E+01	.67548E+01	303	-.24368E+02	-.23348E+01	-.40054E+01	.98402E+00
249	-.15997E+00	-.23120E+01	-.37079E+00	.17963E+00	304	-.23398E+02	-.30209E+01	-.39628E+01	.85444E+00
250	-.25978E+00	-.26449E+01	-.43570E+00	.51397E+00					
251	-.45212E+00	-.32875E+01	-.56094E+00	.92813E+00					
252	-.74890E+00	-.39863E+01	-.71029E+00	.15745E+01					
253	-.12553E+01	-.46911E+01	-.89197E+00	.24080E+01					
254	-.23125E+01	-.56031E+01	-.11873E+01	.35005E+01					
255	-.34533E+01	-.66990E+01	-.15229E+01	.48158E+01					
256	-.63345E+01	-.82674E+01	-.21903E+01	.70022E+01					
257	-.10312E+02	-.82228E+01	-.27802E+01	.89458E+01					
258	-.10936E+02	-.75520E+01	-.27732E+01	.80459E+01					
259	-.11239E+02	-.65723E+01	-.26718E+01	.76394E+01					
260	-.11718E+02	-.60342E+01	-.26628E+01	.70851E+01					
261	-.12055E+02	-.56048E+01	-.26490E+01	.65954E+01					
262	-.12360E+02	-.52103E+01	-.26355E+01	.61780E+01					
263	-.13565E+02	-.72036E+01	-.31153E+01	.97898E+01					
264	-.14099E+02	-.67547E+01	-.31281E+01	.89488E+01					
265	-.14309E+02	-.62308E+01	-.30809E+01	.81436E+01					
266	-.14476E+02	-.57950E+01	-.30407E+01	.74350E+01					

267	-.14575E+02	-.54737E+01	-.30073E+01	.67981E+01
268	-.14640E+02	-.51333E+01	-.29660E+01	.62395E+01
269	-.17495E+02	-.64009E+01	-.35843E+01	.10207E+02
270	-.17348E+02	-.59073E+01	-.34884E+01	.90709E+01
271	-.17343E+02	-.55694E+01	-.34369E+01	.81085E+01
272	-.17156E+02	-.53387E+01	-.33743E+01	.72961E+01
273	-.16970E+02	-.50200E+01	-.32985E+01	.65994E+01
274	-.16737E+02	-.48542E+01	-.32386E+01	.59824E+01
275	-.21261E+02	-.48282E+01	-.39134E+01	.97567E+01

jac verification v shaft BONDED 1/30/89 Low tol. TIME 00:00:00 DATE 00/00/00 JET 2.0 01/30/88

SOLUTION TIME = .10000E+01

SLIDING INTERFACE PARAMETERS

INTERFACE NUMBER 1

INTERFACE NUMBER	MASTER ELEMENT	SLAVE NODE	ISPRG	ETA	NORMAL DISPLACEMENT	NORMAL FORCE
1	1	357	2	.100000E+01	.000000E+00	-.353083E+00
2	1	356	2	-.100000E+01	-.900194E-09	-.602953E+00
3	3	355	2	.100000E+01	.245752E-06	-.640418E+00
4	4	354	2	.100000E+01	-.199189E-07	-.653749E+00
5	5	353	2	.100000E+01	.000000E+00	-.653929E+00
6	6	352	2	.100000E+01	.235249E-06	-.631410E+00
7	7	351	2	.100000E+01	-.962682E-07	-.599507E+00
8	8	350	2	.100000E+01	-.789465E-07	-.546836E+00
9	9	341	2	.100000E+01	-.894231E-07	-.498012E+00
10	10	342	2	.100000E+01	.000000E+00	-.420122E+00
11	11	343	2	.100000E+01	.000000E+00	-.345856E+00
12	12	344	2	.100000E+01	.000000E+00	-.304825E+00
13	13	345	2	.100000E+01	.000000E+00	-.290614E+00
14	14	346	2	.100000E+01	.000000E+00	-.274795E+00
15	15	347	2	.100000E+01	-.454794E-08	-.264506E+00
16	16	348	2	.100000E+01	.898451E-09	-.249928E+00
17	16	349	2	-.100000E+01	.432581E-09	-.130451E+00

PLOT TAPE11 HAS BEEN WRITTEN AT TIME .10000000E+01
RESTART TAPE30 HAS BEEN WRITTEN AT TIME .10000000E+01

1

DATE 00/00/00 TIME 00:00:00 JFT 2.0 01/30/88

```
*****************************************************************************************
*                                                                                       *
*                JJ                    A                    CCCCCCCCCCC                 *
*                JJ                   A A                  CC         CC                *
*                JJ                  AA AA                 CC                           *
*                JJ                 AA   AA                CC                           *
*                JJ                AA     AA               CC                           *
*                JJ               AAAAAAAAAAA             CC                           *
*        JJ      JJ              AA         AA            CC                           *
*       JJ       JJ             AA           AA           CC         CC                *
*        JJJJJJJJJJJJJ         AA             AA           CCCCCCCCCCC                 *
*                                                                                       *
*****************************************************************************************
```

PROGRAMMED BY
JOHNNY H. BIFFLE
DIVISION 1521
SANDIA NATIONAL LABORATORIES
ALBUQUERQUE, NEW MEXICO 87185

1

INPUT DATA CARD IMAGES

jac verification v shaft DEBONDED without friction 1/30/89 Low tol.

```
         1         2         3         4         5         6         7         8
12345678901234567890123456789012345678901234567890123456789012345678901234567890

    3    9    2    6    1    0    2    1    1    0    3 1000    0         0.
    0    0    0    0    0
  304  357  102
    1.506     1.506     1.649     1.344     1.773     1.174     1.878      .998
    1.966      .813     2.034      .621     2.085      .422     2.117      .215
    2.130      .000     1.644     1.644     1.785     1.465     1.908     1.278
    2.013     1.083     2.099      .882     2.167      .672     2.217      .456
    2.249      .232     2.262      .000     1.824     1.824     1.963     1.622
    2.084     1.412     2.188     1.195     2.273      .971     2.340      .739
    2.389      .500     2.420      .254     2.433      .000     2.057     2.057
    2.194     1.826     2.313     1.586     2.415     1.340     2.499     1.086
    2.564      .826     2.613      .558     2.643      .282     2.656      .000
    2.361     2.361     2.495     2.091     2.611     1.813     2.710     1.528
    2.792     1.237     2.856      .938     2.903      .632     2.933      .320
    2.946      .000     2.756     2.756     2.885     2.435     2.998     2.108
    3.094     1.773     3.173     1.432     3.236     1.084     3.281      .730
    3.310      .368     3.322      .000     3.269     3.269     3.393     2.883
    3.501     2.491     3.593     2.092     3.669     1.687     3.729     1.275
    3.772      .856     3.800      .431     3.812      .000     3.936     3.936
    4.053     3.466     4.155     2.989     4.242     2.506     4.313     2.017
    4.370     1.522     4.411     1.021     4.437      .514     4.448      .000
    4.804     4.804     4.911     4.223     5.005     3.637     5.085     3.045
    5.151     2.447     5.203     1.844     5.241     1.235     5.265      .620
    5.275      .000     5.931     5.931     6.027     5.207     6.110     4.479
    6.192     3.745     6.240     3.006     6.286     2.262     6.320     1.513
    6.342      .759     6.351      .000     7.397     7.397     7.477     6.487
    7.547     5.573     7.607     4.655     7.656     3.732     7.695     2.806
    7.723     1.875     7.741      .939     7.749      .000     9.302     9.302
    9.363     8.151     9.415     6.996     9.460     5.838     9.497     4.677
    9.526     3.512     9.547     2.345     9.560     1.174     9.566      .000
   11.780    11.780    11.814    10.313    11.843     8.845    11.869     7.376
   11.889     5.904    11.906     4.431    11.918     2.956    11.925     1.479
   11.929      .000    15.000    15.000    15.000    13.125    15.000    11.250
   15.000     9.375    15.000     7.500    15.000     5.625    15.000     3.750
   15.000     1.875    15.000      .000     1.344     1.649     1.465     1.785
    1.622     1.963     1.826     2.194     2.091     2.495     2.435     2.885
    2.883     3.393     3.466     4.053     4.223     4.911     5.207     6.027
    6.487     7.477     8.151     9.363    10.313    11.814    13.125    15.000
    1.174     1.773     1.278     1.908     1.412     2.084     1.586     2.313
    1.813     2.611     2.108     2.998     2.491     3.501     2.989     4.155
    3.637     5.005     4.479     6.110     5.573     7.547     6.996     9.415
    8.845    11.843    11.250    15.000      .998     1.878     1.083     2.013
    1.195     2.188     1.340     2.415     1.528     2.710     1.773     3.094
    2.092     3.593     2.506     4.242     3.045     5.085     3.745     6.182
    4.655     7.607     5.838     9.460     7.376    11.869     9.375    15.000
     .813     1.966      .882     2.099      .971     2.273     1.086     2.499
    1.237     2.792     1.432     3.173     1.687     3.669     2.017     4.313
    2.447     5.151     3.006     6.240     3.732     7.656     4.677     9.497
    5.904    11.889     7.500    15.000      .621     2.034      .672     2.167
     .739     2.340      .826     2.564      .938     2.856     1.084     3.236
    1.275     3.729     1.522     4.370     1.844     5.203     2.262     6.286
    2.806     7.695     3.512     9.526     4.431    11.906     5.625    15.000
     .422     2.085      .456     2.217      .500     2.389      .558     2.613
     .632     2.903      .730     3.281      .856     3.772     1.021     4.411
    1.235     5.241     1.513     6.320     1.875     7.723     2.345     9.547
    2.956    11.918     3.750    15.000      .215     2.117      .232     2.249
     .254     2.420      .282     2.643      .320     2.933      .368     3.310
     .431     3.800      .514     4.437      .620     5.265      .759     6.342
     .939     7.741     1.174     9.560     1.479    11.925     1.875    15.000
     .000     2.130      .000     2.262      .000     2.433      .000     2.656
     .000     2.946      .000     3.322      .000     3.812      .000     4.448
     .000     5.275      .000     6.351      .000     7.749      .000     9.566
     .000    11.929      .000    15.000     2.080      .000     2.067      .206
    2.036      .405     1.987      .598     1.920      .785     1.834      .966
    1.731     1.140     1.610     1.308     1.470     1.470     2.030      .000
    2.017      .197     1.987      .389     1.939      .575     1.874      .757
```

1.790	.934	1.689	1.105	1.570	1.272	1.434	1.434
1.980	.000	1.968	.188	1.938	.372	1.892	.552
1.827	.729	1.746	.902	1.647	1.071	1.531	1.236
1.398	1.398	1.930	.000	1.918	.179	1.890	.356
1.844	.530	1.781	.701	1.702	.870	1.606	1.036
1.492	1.201	1.362	1.362	1.980	.000	1.869	.170
1.841	.339	1.796	.507	1.735	.673	1.656	.838
1.564	1.002	1.453	1.165	1.326	1.326	1.830	.000
1.819	.161	1.792	.322	1.749	.484	1.689	.645
1.614	.806	1.522	.967	1.414	1.129	1.290	1.290
1.153	1.414	1.185	1.453	1.217	1.492	1.248	1.531
1.280	1.570	1.312	1.610	1.009	1.522	1.037	1.564
1.064	1.606	1.092	1.647	1.119	1.689	1.147	1.731
.858	1.614	.881	1.658	.905	1.702	.928	1.746
.951	1.790	.974	1.834	.700	1.689	.719	1.735
.738	1.781	.757	1.827	.775	1.874	.794	1.920
.536	1.749	.550	1.796	.564	1.844	.578	1.892
.593	1.939	.607	1.987	.364	1.792	.374	1.841
.383	1.890	.393	1.938	.402	1.987	.412	2.036
.185	1.819	.190	1.869	.195	1.918	.200	1.968
.205	2.017	.210	2.067	.000	1.830	.000	1.880
.000	1.930	.000	1.980	.000	2.030	.000	2.080
1.506	1.506	1.649	1.344	1.773	1.174	1.878	.998
1.966	.813	2.034	.621	2.085	.422	2.117	.215
2.130	.000	1.344	1.649	1.174	1.773	.998	1.878
.813	1.966	.621	2.034	.422	2.085	.215	2.117
.000	2.130						

341	342	11	10	3
342	343	12	11	3
343	344	13	12	3
344	345	14	13	3
345	346	15	14	3
346	347	16	15	3
347	348	17	16	3
348	349	18	17	3
10	11	20	19	3
11	12	21	20	3
12	13	22	21	3
13	14	23	22	3
14	15	24	23	3
15	16	25	24	3
16	17	26	25	3
17	18	27	26	3
19	20	29	28	3
20	21	30	29	3
21	22	31	30	3
22	23	32	31	3
23	24	33	32	3
24	25	34	33	3
25	26	35	34	3
26	27	36	35	3
28	29	38	37	3
29	30	39	38	3
30	31	40	39	3
31	32	41	40	3
32	33	42	41	3
33	34	43	42	3
34	35	44	43	3
35	36	45	44	3
37	38	47	46	3
38	39	48	47	3
39	40	49	48	3
40	41	50	49	3
41	42	51	50	3
42	43	52	51	3
43	44	53	52	3
44	45	54	53	3
46	47	56	55	3
47	48	57	56	3
48	49	58	57	3
49	50	59	58	3
50	51	60	59	3
51	52	61	60	3
52	53	62	61	3
53	54	63	62	3
55	56	65	64	3
56	57	66	65	3
57	58	67	66	3
58	59	68	67	3
59	60	69	68	3
60	61	70	69	3
61	62	71	70	3
62	63	72	71	3
64	65	74	73	3
65	66	75	74	3
66	67	76	75	3
67	68	77	76	3
68	69	78	77	3
69	70	79	78	3
70	71	80	79	3
71	72	81	80	3
73	74	83	82	3
74	75	84	83	3
75	76	85	84	3
76	77	86	85	3
77	78	87	86	3
78	79	88	87	3
79	80	89	88	3
80	81	90	89	3
82	83	92	91	3
83	84	93	92	3
84	85	94	93	3
85	86	95	94	3
86	87	96	95	3
87	88	97	96	3
88	89	98	97	3

89	90	99	98	3
91	92	101	100	3
92	93	102	101	3
93	94	103	102	3
94	95	104	103	3
95	96	105	104	3
96	97	106	105	3
97	98	107	106	3
98	99	108	107	3
100	101	110	109	3
101	102	111	110	3
102	103	112	111	3
103	104	113	112	3
104	105	114	113	3
105	106	115	114	3
106	107	116	115	3
107	108	117	116	3
109	110	119	118	3
110	111	120	119	3
111	112	121	120	3
112	113	122	121	3
113	114	123	122	3
114	115	124	123	3
115	116	125	124	3
116	117	126	125	3
341	10	128	350	3
10	19	129	128	3
19	28	130	129	3
28	37	131	130	3
37	46	132	131	3
46	55	133	132	3
55	64	134	133	3
64	73	135	134	3
73	82	136	135	3
82	91	137	136	3
91	100	138	137	3
100	109	139	138	3
109	118	140	139	3
350	128	142	351	3
128	129	143	142	3
129	130	144	143	3
130	131	145	144	3
131	132	146	145	3
132	133	147	146	3
133	134	148	147	3
134	135	149	148	3
135	136	150	149	3
136	137	151	150	3
137	138	152	151	3
138	139	153	152	3
139	140	154	153	3
351	142	156	352	3
142	143	157	156	3
143	144	158	157	3
144	145	159	158	3
145	146	160	159	3
146	147	161	160	3
147	148	162	161	3
148	149	163	162	3
149	150	164	163	3
150	151	165	164	3
151	152	166	165	3
152	153	167	166	3
153	154	168	167	3
352	156	170	353	3
156	157	171	170	3
157	158	172	171	3
158	159	173	172	3
159	160	174	173	3
160	161	175	174	3
161	162	176	175	3
162	163	177	176	3
163	164	178	177	3
164	165	179	178	3
165	166	180	179	3
166	167	181	180	3
167	168	182	181	3
353	170	184	354	3
170	171	185	184	3
171	172	186	185	3
172	173	187	186	3
173	174	188	187	3
174	175	189	188	3
175	176	190	189	3
176	177	191	190	3
177	178	192	191	3
178	179	193	192	3
179	180	194	193	3
180	181	195	194	3
181	182	196	195	3
354	184	198	355	3
184	185	199	198	3
185	186	200	199	3
186	187	201	200	3
187	188	202	201	3
188	189	203	202	3
189	190	204	203	3
190	191	205	204	3
191	192	206	205	3
192	193	207	206	3
193	194	208	207	3
194	195	209	208	3
195	196	210	209	3
355	198	212	356	3
198	199	213	212	3
199	200	214	213	3

200	201	215	214	3
201	202	216	215	3
202	203	217	216	3
203	204	218	217	3
204	205	219	218	3
205	206	220	219	3
206	207	221	220	3
207	208	222	221	3
208	209	223	222	3
209	210	224	223	3
356	212	226	357	3
212	213	227	226	3
213	214	228	227	3
214	215	229	228	3
215	216	230	229	3
216	217	231	230	3
217	218	232	231	3
218	219	233	232	3
219	220	234	233	3
220	221	235	234	3
221	222	236	235	3
222	223	237	236	3
223	224	238	237	3
9	8	240	239	2
8	7	241	240	2
7	6	242	241	2
6	5	243	242	2
5	4	244	243	2
4	3	245	244	2
3	2	246	245	2
2	1	247	246	2
239	240	249	248	2
240	241	250	249	2
241	242	251	250	2
242	243	252	251	2
243	244	253	252	2
244	245	254	253	2
245	246	255	254	2
246	247	256	255	2
248	249	258	257	2
249	250	259	258	2
250	251	260	259	2
251	252	261	260	2
252	253	262	261	2
253	254	263	262	2
254	255	264	263	2
255	256	265	264	2
257	258	267	266	2
258	259	268	267	2
259	260	269	268	2
260	261	270	269	2
261	262	271	270	2
262	263	272	271	2
263	264	273	272	2
264	265	274	273	2
266	267	276	275	2
267	268	277	276	2
268	269	278	277	2
269	270	279	278	2
270	271	280	279	2
271	272	281	280	2
272	273	282	281	2
273	274	283	282	2
275	276	285	284	2
276	277	286	285	2
277	278	287	286	2
278	279	288	287	2
279	280	289	288	2
280	281	290	289	2
281	282	291	290	2
282	283	292	291	2
292	283	294	293	2
283	274	295	294	2
274	265	296	295	2
265	256	297	296	2
256	247	298	297	2
247	1	127	298	2
293	294	300	299	2
294	295	301	300	2
295	296	302	301	2
296	297	303	302	2
297	298	304	303	2
298	127	141	304	2
299	300	306	305	2
300	301	307	306	2
301	302	308	307	2
302	303	309	308	2
303	304	310	309	2
304	141	155	310	2
305	306	312	311	2
306	307	313	312	2
307	308	314	313	2
308	309	315	314	2
309	310	316	315	2
310	155	169	316	2
311	312	318	317	2
312	313	319	318	2
313	314	320	319	2
314	315	321	320	2
315	316	322	321	2
316	169	183	322	2
317	318	324	323	2
318	319	325	324	2
319	320	326	325	2
320	321	327	326	2
321	322	328	327	2

```
  322  183  197  328    2
  323  324  330  329    2
  324  325  331  330    2
  325  326  332  331    2
  326  327  333  332    2
  327  328  334  333    2
  328  197  211  334    2
  329  330  336  335    2
  330  331  337  336    2
  331  332  338  337    2
  332  333  339  338    2
  333  334  340  339    2
  334  211  225  340    2
   -4    9   18   27   36   45   54   63   72   81   90   99  108  117  126   -5
  238  237  236  235  234  233  232  231  230  229  228  227  226  225  340  339
  338  337  336  335   -6  284  275  266  257  248  239  349   -7  357   -8  126
  125  124  123  122  121  120  119  118   -9  118  140  154  168  182  196  210
  224  238  -10  225  211  197  183  169  155  141  127    1    2    3    4    5
    6    7    8    9  -11  357  356  355  354  353  352  351  350  341  342  343
  344  345  346  347  348  349
    1    1        .00        .00      10.00
LINEAR ELASTIC MATERIAL
        .00
  15200.00
       .22
       .00
       .00
       .00
       .00
       .0
    2    1        .00        .00      10.00
LINEAR ELASTIC MATERIAL
        .00
  28000.00
       .15
       .00
       .00
       .00
       .00
       .0
    3    1        .00        .00      10.00
LINEAR ELASTIC MATERIAL
        .00
  15200.00
       .22
       .00
       .00
       .00
       .00
       .0
    1    2    SOLUTION
      .000     1.000     1.000     1.000
    2    2    OUTPUT
      .000     1.000     1.000     1.000
    3    2    STARTING VECTOR CONTROL
      .000     1.000     1.000     1.000
    4    2    CONSTRAINT - CODE        2.
      0.         0.        1.        0.
    5    2    CONSTRAINT - CODE        1.
      0.         0.        1.        0.
    6    2    CONSTRAINT - CODE        2.
      0.         0.        1.        0.
    7    2    CONSTRAINT - CODE        1.
      0.         0.        1.        0.
    8    2    PRESSURE                -1.
      0.         1.        1.        1.
    9    2    PRESSURE                -1.
      0.         1.        1.        1.
    4    4       2.0      .000      .000
    5    5       1.0      .000      .000
    6    6       2.0      .000      .000
    7    7       1.0      .000      .000
    8    8      -1.0     7.530      .000
    9    9      -1.0     2.830      .000
   10   11       0.0   1.0e-05   1.0e+10
     .3E-04     .2E-01
1jac verification v shaft DEBONDED without friction 1/30/89 Low tol.          TIME 00:00:00 DATE 00/00/00 JFT 2.0  01/30/88

jac verification v shaft DEBONDED without friction 1/30/89 Low tol.
  NUMBER OF ELEMEMTS -------------------- 304
  NUMBER OF NODES ----------------------- 357
  NUMBER OF BOUNDARY FLAGS -------------- 102
                    CONTROL CARDS
          ITEM  VALUE  CARD  FIELD
  NUMBER OF MATERIALS -------------------    3    1   1- 5
  TOTAL NUMBER OF FUNCTIONS -------------    9    1   6-10
  MAXIMUM NUMBER OF FUNCTION POINTS -----    2    1  11-15
  NUMBER OF BOUNDARY CARDS --------------    6    1  16-20
  NUMBER OF SLIDING INTERFACES ----------    1    1  21-25
  GEOMETRY TYPE PARAMETER ---------------    0    1  26-30
  PRINT OUTPUT FUNCTION NUMBER ----------    2    1  31-35
  SOLUTION CONTROL FUNCTION NUMBER ------    1    1  36-40
  NODE4 PARAMETER -----------------------    1    1  11-45
  NODE4 FUNCTION NUMBER -----------------    0    1  46-50
  TRIAL DISPLACEMENT FUNCTION NUMBER ----    3    1  51-55
  MAXIMUM NUMBER OF ITERATIONS ALLOWED -- 1000    1  56-60
  TEMPERATURE PARAMETER -----------------    0    1  61-65
  VISCOSITY PARAMETER ------------  .10000E+01    1  71-80
  X GRAVITY OR R ACCELERATION FUNCTION --    0    2   1- 5
  Y OR Z GRAVITY FUNCTION ---------------    0    2   6-10
  RESTART READ PARAMETER ----------------    0    2  11-15
  PLOT OUTPUT FUNCTION NUMBER -----------    0    2  16-20
  RESTART WRITE FUNCTION NUMBER ---------    0    2  21-25
  FT09 DATA FILE PRINT PARAMETER --------    0    2  26-30
```

```
        PLANE STRAIN PROBLEM

      CORE STORAGE REQUIRED IS  18887 WORDS.
      MAXIMUM MEMORY WHICH IS AVAILABLE IS    50000 WORDS.
1jac verification v shaft DEBONDED without friction 1/30/89 Low tol.          TIME 00:00:00 DATE 00/00/00 JFT 2.0  01/30/88

     MATERIAL PROPERTIES


0MATERIAL NUMBER  1
0     TYPE NO.=   1
0     DENSITY =    .000000E+00
0     BIRTH TIME =    .000000E+00
0     DEATH TIME =    .100000E+02
 LINEAR ELASTIC MATERIAL
       .000E+00       .000E+00       .000E+00       .000E+00       .000E+00       .000E+00       .000E+00       .000E+00
       .152E+05       .000E+00       .000E+00       .000E+00       .000E+00       .000E+00       .000E+00       .000E+00
       .220E+00       .000E+00       .000E+00       .000E+00       .000E+00       .000E+00       .000E+00       .000E+00
       .000E+00       .000E+00       .000E+00       .000E+00       .000E+00       .000E+00       .000E+00       .000E+00
       .000E+00       .000E+00       .000E+00       .000E+00       .000E+00       .000E+00       .000E+00       .000E+00
       .000E+00       .000E+00       .000E+00       .000E+00       .000E+00       .000E+00       .000E+00       .000E+00
       .000E+00       .000E+00       .000E+00       .000E+00       .000E+00       .000E+00       .000E+00       .000E+00
       .000E+00       .000E+00       .000E+00       .000E+00       .000E+00       .000E+00       .000E+00       .000E+00
1jac verification v shaft DEBONDED without friction 1/30/89 Low tol.          TIME 00:00:00 DATE 00/00/00 JFT 2.0  01/30/88

     MATERIAL PROPERTIES


0MATERIAL NUMBER  2
0     TYPE NO.=   1
0     DENSITY =    .000000E+00
0     BIRTH TIME =    .000000E+00
0     DEATH TIME =    .100000E+02
 LINEAR ELASTIC MATERIAL
       .000E+00       .000E+00       .000E+00       .000E+00       .000E+00       .000E+00       .000E+00       .000E+00
       .280E+05       .000E+00       .000E+00       .000E+00       .000E+00       .000E+00       .000E+00       .000E+00
       .150E+00       .000E+00       .000E+00       .000E+00       .000E+00       .000E+00       .000E+00       .000E+00
       .000E+00       .000E+00       .000E+00       .000E+00       .000E+00       .000E+00       .000E+00       .000E+00
       .000E+00       .000E+00       .000E+00       .000E+00       .000E+00       .000E+00       .000E+00       .000E+00
       .000E+00       .000E+00       .000E+00       .000E+00       .000E+00       .000E+00       .000E+00       .000E+00
       .000E+00       .000E+00       .000E+00       .000E+00       .000E+00       .000E+00       .000E+00       .000E+00
       .000E+00       .000E+00       .000E+00       .000E+00       .000E+00       .000E+00       .000E+00       .000E+00
1jac verification v shaft DEBONDED without friction 1/30/89 Low tol.          TIME 00:00:00 DATE 00/00/00 JFT 2.0  01/30/88

     MATERIAL PROPERTIES


0MATERIAL NUMBER  3
0     TYPE NO.=   1
0     DENSITY =    .000000E+00
0     BIRTH TIME =    .000000E+00
0     DEATH TIME =    .100000E+02
 LINEAR ELASTIC MATERIAL
       .000E+00       .000E+00       .000E+00       .000E+00       .000E+00       .000E+00       .000E+00       .000E+00
       .152E+05       .000E+00       .000E+00       .000E+00       .000E+00       .000E+00       .000E+00       .000E+00
       .220E+00       .000E+00       .000E+00       .000E+00       .000E+00       .000E+00       .000E+00       .000E+00
       .000E+00       .000E+00       .000E+00       .000E+00       .000E+00       .000E+00       .000E+00       .000E+00
       .000E+00       .000E+00       .000E+00       .000E+00       .000E+00       .000E+00       .000E+00       .000E+00
       .000E+00       .000E+00       .000E+00       .000E+00       .000E+00       .000E+00       .000E+00       .000E+00
       .000E+00       .000E+00       .000E+00       .000E+00       .000E+00       .000E+00       .000E+00       .000E+00
       .000E+00       .000E+00       .000E+00       .000E+00       .000E+00       .000E+00       .000E+00       .000E+00
1jac verification v shaft DEBONDED without friction 1/30/89 Low tol.          TIME 00:00:00 DATE 00/00/00 JFT 2.0  01/30/88
      FUNCTIONS

 NAME     SOLUTION

   DISCRIPTION OF FUNCTION    1 WHICH CONTAINS    2 POINTS
     NUMBER      TIME           VALUE
         1     .00000E+00     .10000E+01
         2     .10000E+01     .10000E+01

 NAME     OUTPUT

   DISCRIPTION OF FUNCTION    2 WHICH CONTAINS    2 POINTS
     NUMBER      TIME           VALUE
         1     .00000E+00     .10000E+01
         2     .10000E+01     .10000E+01

 NAME     STARTING VECTOR CONTROL

   DISCRIPTION OF FUNCTION    3 WHICH CONTAINS    2 POINTS
     NUMBER      TIME           VALUE
         1     .00000E+00     .10000E+01
         2     .10000E+01     .10000E+01

 NAME     CONSTRAINT - CODE        2.

   DISCRIPTION OF FUNCTION    4 WHICH CONTAINS    2 POINTS
     NUMBER      TIME           VALUE
         1     .00000E+00     .00000E+00
         2     .10000E+01     .00000E+00

 NAME     CONSTRAINT - CODE        1.

   DISCRIPTION OF FUNCTION    5 WHICH CONTAINS    2 POINTS
     NUMBER      TIME           VALUE
         1     .00000E+00     .00000E+00
         2     .10000E+01     .00000E+00

 NAME     CONSTRAINT - CODE        2.

   DISCRIPTION OF FUNCTION    6 WHICH CONTAINS    2 POINTS
     NUMBER      TIME           VALUE
         1     .00000E+00     .00000E+00
         2     .10000E+01     .00000E+00
```

NAME CONSTRAINT - CODE 1.

DISCRIPTION OF FUNCTION 7 WHICH CONTAINS 2 POINTS

NUMBER	TIME	VALUE
1	.00000E+00	.00000E+00
2	.10000E+01	.00000E+00

NAME PRESSURE -1.

DISCRIPTION OF FUNCTION 8 WHICH CONTAINS 2 POINTS

NUMBER	TIME	VALUE
1	.00000E+00	.10000E+01
2	.10000E+01	.10000E+01

NAME PRESSURE -1.

DISCRIPTION OF FUNCTION 9 WHICH CONTAINS 2 POINTS

NUMBER	TIME	VALUE
1	.00000E+00	.10000E+01
2	.10000E+01	.10000E+01

1jac verification v shaft DEBONDED without friction 1/30/89 Low tol. TIME 00:00:00 DATE 00/00/00 JFT 2.0 01/30/88

DISPLACEMENT AND FORCE BOUNDARY CONDITIONS

IFLAG	FUNCTION	CODE	UX	UY
4	4	2.00000	.00000E+00	.00000E+00
5	5	1.00000	.00000E+00	.00000E+00
6	6	2.00000	.00000E+00	.00000E+00
7	7	1.00000	.00000E+00	.00000E+00
8	8	-1.00000	.75300E+01	.00000E+00
9	9	-1.00000	.28300E+01	.00000E+00

PRESSURE BOUNDARY CONDITIONS

NUMBER	NODES		FUNCTION	NORMAL	TANGENT
1	126	125	8	.753000E+01	.000000E+00
2	125	124	8	.753000E+01	.000000E+00
3	124	123	8	.753000E+01	.000000E+00
4	123	122	8	.753000E+01	.000000E+00
5	122	121	8	.753000E+01	.000000E+00
6	121	120	8	.753000E+01	.000000E+00
7	120	119	8	.753000E+01	.000000E+00
8	119	118	8	.753000E+01	.000000E+00
9	118	140	9	.283000E+01	.000000E+00
10	140	154	9	.283000E+01	.000000E+00
11	154	168	9	.283000E+01	.000000E+00
12	168	182	9	.283000E+01	.000000E+00
13	182	196	9	.283000E+01	.000000E+00
14	196	210	9	.283000E+01	.000000E+00
15	210	224	9	.283000E+01	.000000E+00
16	224	238	9	.283000E+01	.000000E+00

DISPLACEMENT BOUNDARY CONDITIONS

NUMBER	NODE	FUNCTION	CODE	UX	UY
1	9	4	.200000E+01	.000000E+00	.000000E+00
2	18	4	.200000E+01	.000000E+00	.000000E+00
3	27	4	.200000E+01	.000000E+00	.000000E+00
4	36	4	.200000E+01	.000000E+00	.000000E+00
5	45	4	.200000E+01	.000000E+00	.000000E+00
6	54	4	.200000E+01	.000000E+00	.000000E+00
7	63	4	.200000E+01	.000000E+00	.000000E+00
8	72	4	.200000E+01	.000000E+00	.000000E+00
9	81	4	.200000E+01	.000000E+00	.000000E+00
10	90	4	.200000E+01	.000000E+00	.000000E+00
11	99	4	.200000E+01	.000000E+00	.000000E+00
12	108	4	.200000E+01	.000000E+00	.000000E+00
13	117	4	.200000E+01	.000000E+00	.000000E+00
14	126	4	.200000E+01	.000000E+00	.000000E+00
15	238	5	.100000E+01	.000000E+00	.000000E+00
16	237	5	.100000E+01	.000000E+00	.000000E+00
17	236	5	.100000E+01	.000000E+00	.000000E+00
18	235	5	.100000E+01	.000000E+00	.000000E+00
19	234	5	.100000E+01	.000000E+00	.000000E+00
20	233	5	.100000E+01	.000000E+00	.000000E+00
21	232	5	.100000E+01	.000000E+00	.000000E+00
22	231	5	.100000E+01	.000000E+00	.000000E+00
23	230	5	.100000E+01	.000000E+00	.000000E+00
24	229	5	.100000E+01	.000000E+00	.000000E+00
25	228	5	.100000E+01	.000000E+00	.000000E+00
26	227	5	.100000E+01	.000000E+00	.000000E+00
27	226	5	.100000E+01	.000000E+00	.000000E+00
28	225	5	.100000E+01	.000000E+00	.000000E+00
29	340	5	.100000E+01	.000000E+00	.000000E+00
30	339	5	.100000E+01	.000000E+00	.000000E+00
31	338	5	.100000E+01	.000000E+00	.000000E+00
32	337	5	.100000E+01	.000000E+00	.000000E+00
33	336	5	.100000E+01	.000000E+00	.000000E+00
34	335	5	.100000E+01	.000000E+00	.000000E+00
35	284	6	.200000E+01	.000000E+00	.000000E+00
36	275	6	.200000E+01	.000000E+00	.000000E+00
37	266	6	.200000E+01	.000000E+00	.000000E+00
38	257	6	.200000E+01	.000000E+00	.000000E+00
39	248	6	.200000E+01	.000000E+00	.000000E+00
40	239	6	.200000E+01	.000000E+00	.000000E+00
41	349	6	.200000E+01	.000000E+00	.000000E+00
42	357	7	.100000E+01	.000000E+00	.000000E+00

1jac verification v shaft DEBONDED without friction 1/30/89 Low tol. TIME 00:00:00 DATE 00/00/00 JFT 2.0 01/30/88

SLIDING INTERFACE PARAMETERS

NUMBER	MASTER FLAG	SLAVE FLAG	COEFFICIENT OF FRICTION	NORMAL DISPLACEMENT TOLERANCE	NORMAL FORCE TOLERANCE	ADDITIONAL MASTER FLAGS							
1	10	11	.00000E+00	.10000E-04	.10000E+11	0	0	0	0	0	0	0	0

16 MASTER ELEMENT SIDES FOR INTERFACE 1

NUMBER	NODES

1	211	225
2	197	211
3	183	197
4	169	183
5	155	169
6	141	155
7	127	141
8	1	127
9	2	1
10	3	2
11	4	3
12	5	4
13	6	5
14	7	6
15	8	7
16	9	8

17 SLAVE NODES FOR INTERFACE 1

NUMBER	NODES
1	357
2	356
3	355
4	354
5	353
6	352
7	351
8	350
9	341
10	342
11	343
12	344
13	345
14	346
15	347
16	348
17	349

ljac verification v shaft DEBONDED without friction 1/30/89 Low tol. TIME 00:00:00 DATE 00/00/00 JFT 2.0 01/30/88

STARTING TIME ---------- .00000E+00
FINAL TIME ---------- .10000E+01
DISPLACEMENT TOLERANCE ------ .30000E-04
FORCE TOLERANCE ---------- .20000E-01

CORE STORAGE REQUIRED IS 22077 WORDS.

INITIAL STRESSES

ELEMENT	SIGX	SIGY	SIGZ	SIGXY
1	.00000	.00000	.00000	.00000
2	.00000	.00000	.00000	.00000
3	.00000	.00000	.00000	.00000
4	.00000	.00000	.00000	.00000
5	.00000	.00000	.00000	.00000
6	.00000	.00000	.00000	.00000
7	.00000	.00000	.00000	.00000
8	.00000	.00000	.00000	.00000
9	.00000	.00000	.00000	.00000
10	.00000	.00000	.00000	.00000
11	.00000	.00000	.00000	.00000
12	.00000	.00000	.00000	.00000
13	.00000	.00000	.00000	.00000
14	.00000	.00000	.00000	.00000
15	.00000	.00000	.00000	.00000
16	.00000	.00000	.00000	.00000
17	.00000	.00000	.00000	.00000
18	.00000	.00000	.00000	.00000
19	.00000	.00000	.00000	.00000
20	.00000	.00000	.00000	.00000
21	.00000	.00000	.00000	.00000
22	.00000	.00000	.00000	.00000
23	.00000	.00000	.00000	.00000
24	.00000	.00000	.00000	.00000
25	.00000	.00000	.00000	.00000
26	.00000	.00000	.00000	.00000
27	.00000	.00000	.00000	.00000
28	.00000	.00000	.00000	.00000
29	.00000	.00000	.00000	.00000
30	.00000	.00000	.00000	.00000
31	.00000	.00000	.00000	.00000
32	.00000	.00000	.00000	.00000
33	.00000	.00000	.00000	.00000
34	.00000	.00000	.00000	.00000
35	.00000	.00000	.00000	.00000
36	.00000	.00000	.00000	.00000
37	.00000	.00000	.00000	.00000
38	.00000	.00000	.00000	.00000
39	.00000	.00000	.00000	.00000
40	.00000	.00000	.00000	.00000
41	.00000	.00000	.00000	.00000
42	.00000	.00000	.00000	.00000
43	.00000	.00000	.00000	.00000
44	.00000	.00000	.00000	.00000
45	.00000	.00000	.00000	.00000
46	.00000	.00000	.00000	.00000
47	.00000	.00000	.00000	.00000
48	.00000	.00000	.00000	.00000
49	.00000	.00000	.00000	.00000
50	.00000	.00000	.00000	.00000
51	.00000	.00000	.00000	.00000
52	.00000	.00000	.00000	.00000
53	.00000	.00000	.00000	.00000
54	.00000	.00000	.00000	.00000
55	.00000	.00000	.00000	.00000
56	.00000	.00000	.00000	.00000
57	.00000	.00000	.00000	.00000

58	.00000	.00000	.00000	.00000
59	.00000	.00000	.00000	.00000
60	.00000	.00000	.00000	.00000
61	.00000	.00000	.00000	.00000
62	.00000	.00000	.00000	.00000
63	.00000	.00000	.00000	.00000
64	.00000	.00000	.00000	.00000
65	.00000	.00000	.00000	.00000
66	.00000	.00000	.00000	.00000
67	.00000	.00000	.00000	.00000
68	.00000	.00000	.00000	.00000
69	.00000	.00000	.00000	.00000
70	.00000	.00000	.00000	.00000
71	.00000	.00000	.00000	.00000
72	.00000	.00000	.00000	.00000
73	.00000	.00000	.00000	.00000
74	.00000	.00000	.00000	.00000
75	.00000	.00000	.00000	.00000
76	.00000	.00000	.00000	.00000
77	.00000	.00000	.00000	.00000
78	.00000	.00000	.00000	.00000
79	.00000	.00000	.00000	.00000
80	.00000	.00000	.00000	.00000
81	.00000	.00000	.00000	.00000
82	.00000	.00000	.00000	.00000
83	.00000	.00000	.00000	.00000
84	.00000	.00000	.00000	.00000
85	.00000	.00000	.00000	.00000
86	.00000	.00000	.00000	.00000
87	.00000	.00000	.00000	.00000
88	.00000	.00000	.00000	.00000
89	.00000	.00000	.00000	.00000
90	.00000	.00000	.00000	.00000
91	.00000	.00000	.00000	.00000
92	.00000	.00000	.00000	.00000
93	.00000	.00000	.00000	.00000
94	.00000	.00000	.00000	.00000
95	.00000	.00000	.00000	.00000
96	.00000	.00000	.00000	.00000
97	.00000	.00000	.00000	.00000
98	.00000	.00000	.00000	.00000
99	.00000	.00000	.00000	.00000
100	.00000	.00000	.00000	.00000
101	.00000	.00000	.00000	.00000
102	.00000	.00000	.00000	.00000
103	.00000	.00000	.00000	.00000
104	.00000	.00000	.00000	.00000
105	.00000	.00000	.00000	.00000
106	.00000	.00000	.00000	.00000
107	.00000	.00000	.00000	.00000
108	.00000	.00000	.00000	.00000
109	.00000	.00000	.00000	.00000
110	.00000	.00000	.00000	.00000
111	.00000	.00000	.00000	.00000
112	.00000	.00000	.00000	.00000
113	.00000	.00000	.00000	.00000
114	.00000	.00000	.00000	.00000
115	.00000	.00000	.00000	.00000
116	.00000	.00000	.00000	.00000
117	.00000	.00000	.00000	.00000
118	.00000	.00000	.00000	.00000
119	.00000	.00000	.00000	.00000
120	.00000	.00000	.00000	.00000
121	.00000	.00000	.00000	.00000
122	.00000	.00000	.00000	.00000
123	.00000	.00000	.00000	.00000
124	.00000	.00000	.00000	.00000
125	.00000	.00000	.00000	.00000
126	.00000	.00000	.00000	.00000
127	.00000	.00000	.00000	.00000
128	.00000	.00000	.00000	.00000
129	.00000	.00000	.00000	.00000
130	.00000	.00000	.00000	.00000
131	.00000	.00000	.00000	.00000
132	.00000	.00000	.00000	.00000
133	.00000	.00000	.00000	.00000
134	.00000	.00000	.00000	.00000
135	.00000	.00000	.00000	.00000
136	.00000	.00000	.00000	.00000
137	.00000	.00000	.00000	.00000
138	.00000	.00000	.00000	.00000
139	.00000	.00000	.00000	.00000
140	.00000	.00000	.00000	.00000
141	.00000	.00000	.00000	.00000
142	.00000	.00000	.00000	.00000
143	.00000	.00000	.00000	.00000
144	.00000	.00000	.00000	.00000
145	.00000	.00000	.00000	.00000
146	.00000	.00000	.00000	.00000
147	.00000	.00000	.00000	.00000
148	.00000	.00000	.00000	.00000
149	.00000	.00000	.00000	.00000
150	.00000	.00000	.00000	.00000
151	.00000	.00000	.00000	.00000
152	.00000	.00000	.00000	.00000
153	.00000	.00000	.00000	.00000
154	.00000	.00000	.00000	.00000
155	.00000	.00000	.00000	.00000
156	.00000	.00000	.00000	.00000
157	.00000	.00000	.00000	.00000
158	.00000	.00000	.00000	.00000
159	.00000	.00000	.00000	.00000
160	.00000	.00000	.00000	.00000
161	.00000	.00000	.00000	.00000
162	.00000	.00000	.00000	.00000
163	.00000	.00000	.00000	.00000

164	.00000	.00000	.00000	.00000
165	.00000	.00000	.00000	.00000
166	.00000	.00000	.00000	.00000
167	.00000	.00000	.00000	.00000
168	.00000	.00000	.00000	.00000
169	.00000	.00000	.00000	.00000
170	.00000	.00000	.00000	.00000
171	.00000	.00000	.00000	.00000
172	.00000	.00000	.00000	.00000
173	.00000	.00000	.00000	.00000
174	.00000	.00000	.00000	.00000
175	.00000	.00000	.00000	.00000
176	.00000	.00000	.00000	.00000
177	.00000	.00000	.00000	.00000
178	.00000	.00000	.00000	.00000
179	.00000	.00000	.00000	.00000
180	.00000	.00000	.00000	.00000
181	.00000	.00000	.00000	.00000
182	.00000	.00000	.00000	.00000
183	.00000	.00000	.00000	.00000
184	.00000	.00000	.00000	.00000
185	.00000	.00000	.00000	.00000
186	.00000	.00000	.00000	.00000
187	.00000	.00000	.00000	.00000
188	.00000	.00000	.00000	.00000
189	.00000	.00000	.00000	.00000
190	.00000	.00000	.00000	.00000
191	.00000	.00000	.00000	.00000
192	.00000	.00000	.00000	.00000
193	.00000	.00000	.00000	.00000
194	.00000	.00000	.00000	.00000
195	.00000	.00000	.00000	.00000
196	.00000	.00000	.00000	.00000
197	.00000	.00000	.00000	.00000
198	.00000	.00000	.00000	.00000
199	.00000	.00000	.00000	.00000
200	.00000	.00000	.00000	.00000
201	.00000	.00000	.00000	.00000
202	.00000	.00000	.00000	.00000
203	.00000	.00000	.00000	.00000
204	.00000	.00000	.00000	.00000
205	.00000	.00000	.00000	.00000
206	.00000	.00000	.00000	.00000
207	.00000	.00000	.00000	.00000
208	.00000	.00000	.00000	.00000
209	.00000	.00000	.00000	.00000
210	.00000	.00000	.00000	.00000
211	.00000	.00000	.00000	.00000
212	.00000	.00000	.00000	.00000
213	.00000	.00000	.00000	.00000
214	.00000	.00000	.00000	.00000
215	.00000	.00000	.00000	.00000
216	.00000	.00000	.00000	.00000
217	.00000	.00000	.00000	.00000
218	.00000	.00000	.00000	.00000
219	.00000	.00000	.00000	.00000
220	.00000	.00000	.00000	.00000
221	.00000	.00000	.00000	.00000
222	.00000	.00000	.00000	.00000
223	.00000	.00000	.00000	.00000
224	.00000	.00000	.00000	.00000
225	.00000	.00000	.00000	.00000
226	.00000	.00000	.00000	.00000
227	.00000	.00000	.00000	.00000
228	.00000	.00000	.00000	.00000
229	.00000	.00000	.00000	.00000
230	.00000	.00000	.00000	.00000
231	.00000	.00000	.00000	.00000
232	.00000	.00000	.00000	.00000
233	.00000	.00000	.00000	.00000
234	.00000	.00000	.00000	.00000
235	.00000	.00000	.00000	.00000
236	.00000	.00000	.00000	.00000
237	.00000	.00000	.00000	.00000
238	.00000	.00000	.00000	.00000
239	.00000	.00000	.00000	.00000
240	.00000	.00000	.00000	.00000
241	.00000	.00000	.00000	.00000
242	.00000	.00000	.00000	.00000
243	.00000	.00000	.00000	.00000
244	.00000	.00000	.00000	.00000
245	.00000	.00000	.00000	.00000
246	.00000	.00000	.00000	.00000
247	.00000	.00000	.00000	.00000
248	.00000	.00000	.00000	.00000
249	.00000	.00000	.00000	.00000
250	.00000	.00000	.00000	.00000
251	.00000	.00000	.00000	.00000
252	.00000	.00000	.00000	.00000
253	.00000	.00000	.00000	.00000
254	.00000	.00000	.00000	.00000
255	.00000	.00000	.00000	.00000
256	.00000	.00000	.00000	.00000
257	.00000	.00000	.00000	.00000
258	.00000	.00000	.00000	.00000
259	.00000	.00000	.00000	.00000
260	.00000	.00000	.00000	.00000
261	.00000	.00000	.00000	.00000
262	.00000	.00000	.00000	.00000
263	.00000	.00000	.00000	.00000
264	.00000	.00000	.00000	.00000
265	.00000	.00000	.00000	.00000
266	.00000	.00000	.00000	.00000
267	.00000	.00000	.00000	.00000
268	.00000	.00000	.00000	.00000
269	.00000	.00000	.00000	.00000

270	.00000	.00000	.00000	.00000
271	.00000	.00000	.00000	.00000
272	.00000	.00000	.00000	.00000
273	.00000	.00000	.00000	.00000
274	.00000	.00000	.00000	.00000
275	.00000	.00000	.00000	.00000
276	.00000	.00000	.00000	.00000
277	.00000	.00000	.00000	.00000
278	.00000	.00000	.00000	.00000
279	.00000	.00000	.00000	.00000
280	.00000	.00000	.00000	.00000
281	.00000	.00000	.00000	.00000
282	.00000	.00000	.00000	.00000
283	.00000	.00000	.00000	.00000
284	.00000	.00000	.00000	.00000
285	.00000	.00000	.00000	.00000
286	.00000	.00000	.00000	.00000
287	.00000	.00000	.00000	.00000
288	.00000	.00000	.00000	.00000
289	.00000	.00000	.00000	.00000
290	.00000	.00000	.00000	.00000
291	.00000	.00000	.00000	.00000
292	.00000	.00000	.00000	.00000
293	.00000	.00000	.00000	.00000
294	.00000	.00000	.00000	.00000
295	.00000	.00000	.00000	.00000
296	.00000	.00000	.00000	.00000
297	.00000	.00000	.00000	.00000
298	.00000	.00000	.00000	.00000
299	.00000	.00000	.00000	.00000
300	.00000	.00000	.00000	.00000
301	.00000	.00000	.00000	.00000
302	.00000	.00000	.00000	.00000
303	.00000	.00000	.00000	.00000
304	.00000	.00000	.00000	.00000

jac verification v shaft DEBONDED without friction 1/30/89 Low tol. TIME 00:00:00 DATE 00/00/00 JFT 2.0 01/30/88

SOLUTION TIME = .10000E+01

OUTPUT FOR LOAD INCREMENT 1

SUM OF X OR R REACTIONS ----------	-.11307E+03
SUM OF Y OR Z REACTIONS ----------	-.41616E+02
NORM OF APPLIED FORCES ----------	.17062E+04
RESIDUAL FORCE NORM ----------	.63426E+00
RESIDUAL FORCE TOLERANCE ----------	.19280E-01
INCREMENTAL DISPLACEMENT NORM ---------	.20963E-02
INCREMENTAL DISPLACEMENT TOLERANCE ----	.16667E-01
CPU TIME FOR LOAD STEP ----------	.00000E+00
TOTAL CPU TIME ----------	.00000E+00
NUMBER ITERATIONS ON FIRST PASS -------	141
NUMBER OF ITERATIONS ON SECOND PASS ---	0
NODE4 PARAMETER ----------	1
TRIAL DISPLACEMENT FACTOR ----------	.10000E+01

jac verification v shaft DEBONDED without friction 1/30/89 Low tol. TIME 00:00:00 DATE 00/00/00 JFT 2.0 01/30/88

SOLUTION TIME = .10000E+01

NODE	X	Y	UX	UY	NODE	X	Y	UX	UY
1	.15060E+01	.15060E+01	-.10836E-02	-.27672E-03	56	.33930E+01	.28830E+01	-.19717E-02	-.79847E-04
2	.16490E+01	.13440E+01	-.13606E-02	-.38945E-03	57	.35010E+01	.24910E+01	-.21242E-02	-.10460E-03
3	.17730E+01	.11740E+01	-.16308E-02	-.44517E-03	58	.35930E+01	.20920E+01	-.22793E-02	-.12111E-03
4	.18780E+01	.99800E+00	-.18724E-02	-.45315E-03	59	.36690E+01	.16870E+01	-.24267E-02	-.12217E-03
5	.19660E+01	.81300E+00	-.20840E-02	-.41874E-03	60	.37290E+01	.12750E+01	-.25595E-02	-.10948E-03
6	.20340E+01	.62100E+00	-.22540E-02	-.34713E-03	61	.37720E+01	.85600E+00	-.26613E-02	-.82627E-04
7	.20850E+01	.42200E+00	-.23757E-02	-.24717E-03	62	.38000E+01	.43100E+00	-.27311E-02	-.44415E-04
8	.21170E+01	.21500E+00	-.24499E-02	-.12927E-03	63	.38120E+01	.00000E+00	-.27571E-02	.00000E+00
9	.21300E+01	.00000E+00	-.24766E-02	.00000E+00	64	.39360E+01	.39360E+01	-.20393E-02	-.87205E-04
10	.16440E+01	.16440E+01	-.16730E-02	.23938E-03	65	.40530E+01	.34660E+01	-.21701E-02	-.11029E-03
11	.17850E+01	.14650E+01	-.18774E-02	.18868E-03	66	.41550E+01	.29890E+01	-.23109E-02	-.12588E-03
12	.19080E+01	.12780E+01	-.20566E-02	.14497E-03	67	.42420E+01	.25060E+01	-.24502E-02	-.13627E-03
13	.20130E+01	.10830E+01	-.22120E-02	.11082E-03	68	.43130E+01	.20170E+01	-.25890E-02	-.13626E-03
14	.20990E+01	.88200E+00	-.23276E-02	.84642E-04	69	.43700E+01	.15220E+01	-.27119E-02	-.11949E-03
15	.21670E+01	.67200E+00	-.24153E-02	.62680E-04	70	.44110E+01	.10210E+01	-.28137E-02	-.90099E-04
16	.22170E+01	.45600E+00	-.24684E-02	.43239E-04	71	.44370E+01	.51400E+00	-.28821E-02	-.49584E-04
17	.22490E+01	.23200E+00	-.24982E-02	.25094E-04	72	.44480E+01	.00000E+00	-.29039E-02	.00000E+00
18	.22620E+01	.00000E+00	-.25062E-02	.00000E+00	73	.48040E+01	.48040E+01	-.23527E-02	-.12714E-03
19	.18240E+01	.18240E+01	-.16092E-02	.15409E-03	74	.49110E+01	.42230E+01	-.24719E-02	-.13604E-03
20	.19630E+01	.16220E+01	-.18130E-02	.10570E-03	75	.50050E+01	.36370E+01	-.25920E-02	-.14792E-03
21	.20840E+01	.14120E+01	-.20031E-02	.69998E-04	76	.50850E+01	.30450E+01	-.27185E-02	-.15095E-03
22	.21880E+01	.11950E+01	-.21707E-02	.40229E-04	77	.51510E+01	.24470E+01	-.28415E-02	-.14264E-03
23	.22730E+01	.97100E+00	-.23094E-02	.26739E-04	78	.52030E+01	.18440E+01	-.29588E-02	-.12768E-03
24	.23400E+01	.73900E+00	-.24124E-02	.18411E-04	79	.52410E+01	.12350E+01	-.30511E-02	-.96731E-04
25	.23890E+01	.50000E+00	-.24819E-02	.14241E-04	80	.52650E+01	.62000E+00	-.31162E-02	-.51027E-04
26	.24200E+01	.25400E+00	-.25223E-02	.68864E-05	81	.52750E+01	.00000E+00	-.31404E-02	.00000E+00
27	.24330E+01	.00000E+00	-.25332E-02	.00000E+00	82	.59310E+01	.59310E+01	-.27854E-02	-.17831E-03
28	.20570E+01	.20570E+01	-.15822E-02	.85364E-04	83	.60270E+01	.52070E+01	-.28862E-02	-.17967E-03
29	.21940E+01	.18260E+01	-.17776E-02	.38347E-04	84	.61100E+01	.44790E+01	-.29964E-02	-.17725E-03
30	.23130E+01	.15860E+01	-.19700E-02	.22963E-05	85	.61820E+01	.37450E+01	-.31066E-02	-.17410E-03
31	.24150E+01	.13400E+01	-.21442E-02	-.17272E-04	86	.62400E+01	.30060E+01	-.32174E-02	-.16379E-03
32	.24990E+01	.10860E+01	-.22925E-02	-.25007E-04	87	.62860E+01	.22620E+01	-.33193E-02	-.13785E-03
33	.25640E+01	.82600E+00	-.24141E-02	-.24618E-04	88	.63200E+01	.15130E+01	-.34099E-02	-.10194E-03
34	.26130E+01	.55800E+00	-.24986E-02	-.17503E-04	89	.63420E+01	.75900E+00	-.34662E-02	-.56186E-04
35	.26430E+01	.28200E+00	-.25476E-02	-.80787E-05	90	.63510E+01	.00000E+00	-.34902E-02	.00000E+00
36	.26560E+01	.00000E+00	-.25677E-02	.00000E+00	91	.73970E+01	.73970E+01	-.33566E-02	-.25569E-03
37	.23610E+01	.23610E+01	-.16017E-02	.27316E-04	92	.74770E+01	.64870E+01	-.34503E-02	-.24072E-03
38	.24950E+01	.20910E+01	-.17860E-02	-.12857E-04	93	.75470E+01	.55730E+01	-.35419E-02	-.22644E-03
39	.26110E+01	.18130E+01	-.19685E-02	-.46652E-04	94	.76070E+01	.46550E+01	-.36452E-02	-.20794E-03
40	.27100E+01	.15280E+01	-.21424E-02	-.65461E-04	95	.76560E+01	.37320E+01	-.37459E-02	-.18348E-03
41	.27920E+01	.12370E+01	-.22970E-02	-.69520E-04	96	.76950E+01	.28060E+01	-.38390E-02	-.15616E-03
42	.28560E+01	.93800E+00	-.24277E-02	-.61961E-04	97	.77230E+01	.18750E+01	-.39155E-02	-.11431E-03
43	.29030E+01	.63200E+00	-.25243E-02	-.45480E-04	98	.77410E+01	.93900E+00	-.39710E-02	-.58882E-04
44	.29330E+01	.32000E+00	-.25850E-02	-.24211E-04	99	.77490E+01	.00000E+00	-.39898E-02	.00000E+00
45	.29460E+01	.00000E+00	-.26053E-02	.00000E+00	100	.93020E+01	.93020E+01	-.40882E-02	-.39324E-03
46	.27560E+01	.27560E+01	-.16786E-02	-.14583E-04	101	.93630E+01	.81510E+01	-.41774E-02	-.35313E-03
47	.28850E+01	.24350E+01	-.18449E-02	-.52807E-04	102	.94150E+01	.69960E+01	-.42728E-02	-.31494E-03
48	.29980E+01	.21080E+01	-.20155E-02	-.81141E-04	103	.94600E+01	.58380E+01	-.43638E-02	-.27681E-03

49	.30940E+01	.17730E+01	-.21809E-02	-.97951E-04
50	.31730E+01	.14320E+01	-.23371E-02	-.10264E-03
51	.32360E+01	.10840E+01	-.24693E-02	-.91239E-04
52	.32810E+01	.73000E+00	-.25714E-02	-.68035E-04
53	.33100E+01	.36800E+00	-.26378E-02	-.36488E-04
54	.33220E+01	.00000E+00	-.26630E-02	.00000E+00
55	.32690E+01	.32690E+01	-.18156E-02	-.52026E-04

jac verification v shaft DEBONDED without friction 1/30/89 Low tol. TIME 00:00:00 DATE 00/00/00 JFT 2.0 01/30/88

SOLUTION TIME = .10000E+01

NODE	X	Y	UX	UY
111	.11843E+02	.88450E+01	-.52001E-02	-.48153E-03
112	.11869E+02	.73760E+01	-.53010E-02	-.41295E-03
113	.11889E+02	.59040E+01	-.53965E-02	-.33924E-03
114	.11906E+02	.44310E+01	-.54906E-02	-.26702E-03
115	.11918E+02	.29560E+01	-.55682E-02	-.18242E-03
116	.11925E+02	.14790E+01	-.56235E-02	-.89647E-04
117	.11929E+02	.00000E+00	-.56422E-02	.00000E+00
118	.15000E+02	.15000E+02	-.62050E-02	-.90 14E-03
119	.15000E+02	.13125E+02	-.63002E-02	-.82215E-03
120	.15000E+02	.11250E+02	-.63997E-02	-.74076E-03
121	.15000E+02	.93750E+01	-.65012E-02	-.65828E-03
122	.15000E+02	.75000E+01	-.66129E-02	-.56599E-03
123	.15000E+02	.56250E+01	-.67137E-02	-.45206E-03
124	.15000E+02	.37500E+01	-.68088E-02	-.32176E-03
125	.15000E+02	.18750E+01	-.68754E-02	-.17061E-03
126	15000E+02	.00000E+00	-.69021E-02	.00000E+00
127	.13440E+01	.16490E+01	-.84601E-03	-.13494E-03
128	.14650E+01	.17850E+01	-.14738E-02	.30280E-03
129	.16220E+01	.19630E+01	-.14106E-02	.22814E-03
130	.18260E+01	.21940E+01	-.13859E-02	.15880E-03
131	.20910E+01	.24950E+01	-.14011E-02	.96295E-04
132	.24350E+01	.28850E+01	-.14695E-02	.45204E-04
133	.28830E+01	.33930E+01	-.15936E-02	-.26028E-05
134	.34660E+01	.40530E+01	-.17871E-02	-.45870E-04
135	.42230E+01	.49110E+01	-.20632E-02	-.90600E-04
136	.52070E+01	.60270E+01	-.24412E-02	-.14557E-03
137	.64870E+01	.74770E+01	-.29421E-02	-.22244E-03
138	.81510E+01	.93630E+01	-.35840E-02	-.34482E-03
139	.10313E+02	.11814E+02	-.43891E-02	-.54014E-03
140	.13125E+02	.15000E+02	-.54150E-02	-.81149E-03
141	.11740E+01	.17730E+01	-.64230E-03	.63037E-05
142	.12780E+01	.19080E+01	-.12692E-02	.36727E-03
143	.14120E+01	.20840E+01	-.12136E-02	.30020E-03
144	.15860E+01	.23130E+01	-.11916E-02	.23600E-03
145	.18130E+01	.26110E+01	-.12006E-02	.17222E-03
146	.21080E+01	.29980E+01	-.12559E-02	.11328E-03
147	.24910E+01	.35010E+01	-.13641E-02	.59244E-04
148	.29890E+01	.41550E+01	-.15302E-02	.71932E-05
149	.36370E+01	.50050E+01	-.17668E-02	-.46462E-04
150	.44790E+01	.61100E+01	-.20935E-02	-.10618E-03
151	.55730E+01	.75470E+01	-.25193E-02	-.18158E-03
152	.69960E+01	.94150E+01	-.30754E-02	-.29374E-03
153	.88450E+01	.11843E+02	-.37647E-02	-.47093E-03
154	.11250E+02	.15000E+02	-.46252E-02	-.72366E-03
155	.99800E+00	.18780E+01	-.48050E-03	.14224E-03
156	.10830E+01	.20130E+01	-.10660E-02	.41164E-03
157	.11950E+01	.21880E+01	-.10208E-02	.36556E-03
158	.13400E+01	.24150E+01	-.99625E-03	.30846E-03
159	.15280E+01	.27100E+01	-.10010E-02	.25052E-03
160	.17730E+01	.30940E+01	-.10441E-02	.18983E-03
161	.20920E+01	.35930E+01	-.11328E-02	.12939E-03
162	.25060E+01	.42420E+01	-.12691E-02	.71103E-04
163	.30450E+01	.50850E+01	-.14662E-02	.89851E-05
164	.37450E+01	.61820E+01	-.17402E-02	-.57150E-04
165	.46550E+01	.76070E+01	-.20982E-02	-.13643E-03

NODE	X	Y	UX	UY
166	.58380E+01	.94600E+01	-.25583E-02	-.24223E-03
167	.73760E+01	.11869E+02	-.31388E-02	-.39918E-03
168	.93750E+01	.15000E+02	-.38368E-02	-.63219E-03
169	.81300E+00	.19660E+01	-.35256E-03	.25618E-03
170	.88200E+00	.20990E+01	-.86483E-03	.44148E-03
171	.97100E+00	.22730E+01	-.82755E-03	.41254E-03
172	.10860E+01	.24990E+01	-.80315E-03	.37379E-03
173	.12370E+01	.27920E+01	-.80351E-03	.32203E-03
174	.14320E+01	.31730E+01	-.83545E-03	.26438E-03
175	.16870E+01	.36690E+01	-.90095E-03	.20261E-03
176	.20170E+01	.43130E+01	-.10096E-02	.13736E-03
177	.24470E+01	.51510E+01	-.11642E-02	.71604E-04
178	.30060E+01	.62400E+01	-.13881E-02	-.27084E-05
179	.37320E+01	.76560E+01	-.16722E-02	-.86373E-04
180	.46770E+01	.94970E+01	-.20447E-02	-.18815E-03
181	.59040E+01	.11889E+02	-.25074E-02	-.33361E-03
182	.75000E+01	.15000E+02	-.30528E-02	-.53879E-03
183	.62100E+00	.20340E+01	-.25412E-03	.34163E-03
184	.67200E+00	.21670E+01	-.65864E-03	.45230E-03
185	.73900E+00	.23400E+01	-.63285E-03	.44236E-03
186	.82600E+00	.25640E+01	-.61242E-03	.41922E-03
187	.93800E+00	.28560E+01	-.60691E-03	.38130E-03
188	.10840E+01	.32360E+01	-.62564E-03	.33[illegible]E-03
189	.12750E+01	.37290E+01	-.67325E-03	.27112E-03
190	.15220E+01	.43700E+01	-.75119E-03	.20564E-03
191	.18440E+01	.52030E+01	-.86851E-03	.13020E-03
192	.22620E+01	.62860E+01	-.10335E-02	.54900E-04
193	.28060E+01	.76950E+01	-.12494E-02	-.33359E-04
194	.35120E+01	.95260E+01	-.15278E-02	-.13729E-03
195	.44310E+01	.11906E+02	-.18788E-02	-.26834E-03
196	.56250E+01	.15000E+02	-.22728E-02	-.45672E-03
197	.42200E+00	.20850E+01	-.16625E-03	.39122E-03
198	.45600E+00	.22170E+01	-.44795E-03	.45437E-03
199	.50000E+00	.23890E+01	-.42957E-03	.45874E-03
200	.55800E+00	.26130E+01	-.41537E-03	.44918E-03
201	.63200E+00	.29030E+01	-.41085E-03	.42330E-03
202	.73000E+00	.32810E+01	-.41867E-03	.38146E-03
203	.85600E+00	.37720E+01	-.44788E-03	.32747E-03
204	.10210E+01	.44110E+01	-.49730E-03	.26191E-03
205	.12350E+01	.52410E+01	-.57613E-03	.18667E-03
206	.15130E+01	.63200E+01	-.68401E-03	.10292E-03
207	.18750E+01	.77230E+01	-.83177E-03	.13102E-04
208	.23450E+01	.95470E+01	-.10134E-02	-.90267E-04
209	.29560E+01	.11918E+02	-.12522E-02	-.21557E-03
210	.37500E+01	.15000E+02	-.15043E-02	-.38585E-03
211	.21500E+00	.21170E+01	-.84595E-04	.42094E-03
212	.23200E+00	.22490E+01	-.22812E-03	.44753E-03
213	.25400E+00	.24200E+01	-.21982E-03	.46261E-03
214	.28200E+00	.26430E+01	-.21128E-03	.46283E-03
215	.32000E+00	.29330E+01	-.20750E-03	.44841E-03
216	.36800E+00	.33100E+01	-.21021E-03	.41495E-03
217	.43400E+00	.38000E+01	-.22302E-03	.36409E-03
218	.51400E+00	.44370E+01	-.24948E-03	.29719E-03
219	.62000E+00	.52650E+01	-.28709E-03	.22247E-03
220	.75900E+00	.63420E+01	-.34185E-03	.13888E-03

jac verification v shaft DEBONDED without friction 1/30/89 Low tol. TIME 00:00:00 DATE 00/00/00 JFT 2.0 01/30/88

SOLUTION TIME = .10000E+01

NODE	X	Y	UX	UY
221	.93900E+00	.77410E+01	-.41410E-03	.46033E-04
222	.11740E+01	.95600E+01	-.50668E-03	-.58919E-04
223	.14790E+01	.11925E+02	-.62618E-03	-.18135E-03
224	.18750E+01	.15000E+02	-.74964E-03	-.33406E-03
225	.00000E+00	.21300E+01	.00000E+00	.41914E-03
226	.00000E+00	.22620E+01	.00000E+00	.44815E-03
227	.00000E+00	.24330E+01	.00000E+00	.46462E-03
228	.00000E+00	.26560E+01	.00000E+00	.46814E-03
229	.00000E+00	.29460E+01	.00000E+00	.45589E-03
230	.00000E+00	.33220E+01	.00000E+00	.42436E-03
231	.00000E+00	.38120E+01	.00000E+00	.37509E-03
232	.00000E+00	.44480E+01	.00000E+00	.31225E-03
233	.00000E+00	.52750E+01	.00000E+00	.23436E-03
234	.00000E+00	.63510E+01	.00000E+00	.14910E-03
235	.00000E+00	.77490E+01	.00000E+00	.57967E-04
236	.00000E+00	.95660E+01	.00000E+00	-.47232E-04
237	.00000E+00	.11929E+02	.00000E+00	-.16740E-03
238	.00000E+00	.15000E+02	.00000E+00	-.31887E-03
239	.20800E+01	.00000E+00	-.24759E-02	.00000E+00
240	.20670E+01	.20600E+00	-.24526E-02	-.11860E-03
241	.20360E+01	.40500E+00	-.23848E-02	-.22582E-03
242	.19870E+01	.59800E+00	-.22708E-02	-.31646E-03
243	.19200E+01	.78500E+00	-.21102E-02	-.37995E-03
244	.18340E+01	.96600E+00	-.19082E-02	-.40910E-03
245	.17310E+01	.11400E+01	-.16721E-02	-.39845E-03
246	.16100E+01	.13080E+01	-.14078E-02	-.33874E-03
247	.14700E+01	.14700E+01	-.11315E-02	-.23201E-03
248	.20300E+01	.00000E+00	-.24767E-02	.00000E+00
249	.20170E+01	.19700E+00	-.24558E-02	-.10827E-03
250	.19870E+01	.38900E+00	-.23931E-02	-.20625E-03
251	.19390E+01	.57500E+00	-.22875E-02	-.28746E-03
252	.18740E+01	.75700E+00	-.21366E-02	-.34322E-03
253	.17900E+01	.93400E+00	-.19441E-02	-.36615E-03
254	.16890E+01	.11050E+01	-.17160E-02	-.35015E-03
255	.15700E+01	.12720E+01	-.14543E-02	-.28968E-03
256	.14340E+01	.14340E+01	-.11775E-02	-.18813E-03
257	.19800E+01	.00000E+00	-.24777E-02	.00000E+00
258	.19680E+01	.18800E+00	-.24594E-02	-.98304E-04

NODE	X	Y	UX	UY
276	.18690E+01	.17000E+00	-.24680E-02	-.80962E-04
277	.18410E+01	.33900E+00	-.24201E-02	-.15209E-03
278	.17960E+01	.50700E+00	-.23346E-02	-.20615E-03
279	.17350E+01	.67300E+00	-.22114E-02	-.23749E-03
280	.16580E+01	.83800E+00	-.20484E-02	-.24054E-03
281	.15640E+01	.10020E+01	-.18461E-02	-.20981E-03
282	.14530E+01	.11650E+01	-.16002E-02	-.14592E-03
283	.13260E+01	.13260E+01	-.13197E-02	-.56798E-04
284	.18300E+01	.00000E+00	-.24859E-02	.00000E+00
285	.18190E+01	.16100E+00	-.24727E-02	-.74767E-04
286	.17920E+01	.32200E+00	-.24292E-02	-.13539E-03
287	.17490E+01	.48400E+00	-.23505E-02	-.18068E-03
288	.16890E+01	.64500E+00	-.22349E-02	-.20414E-03
289	.16140E+01	.80600E+00	-.20816E-02	-.19938E-03
290	.15220E+01	.96700E+00	-.18883E-02	-.16326E-03
291	.14140E+01	.11290E+01	-.16529E-02	-.94678E-04
292	.12900E+01	.12900E+01	-.13708E-02	-.12358E-04
293	.11530E+01	.14140E+01	-.11290E-02	.80398E-04
294	.11850E+01	.14530E+01	-.10800E-02	.47011E-04
295	.12170E+01	.14920E+01	-.10312E-02	.12284E-04
296	.12480E+01	.15310E+01	-.98351E-03	-.23143E-04
297	.12800E+01	.15700E+01	-.93718E-03	-.59756E-04
298	.13120E+01	.16100E+01	-.88976E-03	-.97832E-04
299	.10090E+01	.15220E+01	-.91215E-03	.17339E-03
300	.10370E+01	.15640E+01	-.86413E-03	.14789E-03
301	.10640E+01	.16060E+01	-.81785E-03	.12292E-03
302	.10920E+01	.16470E+01	-.77407E-03	.95556E-04
303	.11190E+01	.16890E+01	-.73009E-03	.67003E-04
304	.11470E+01	.17310E+01	-.68790E-03	.37791E-04
305	.85800E+00	.16140E+01	-.71511E-03	.25604E-03
306	.88100E+00	.16580E+01	-.67414E-03	.24136E-03
307	.90500E+00	.17020E+01	-.63443E-03	.22376E-03
308	.92800E+00	.17460E+01	-.59509E-03	.20576E-03
309	.95100E+00	.17900E+01	-.55727E-03	.18650E-03
310	.97400E+00	.18340E+01	-.51874E-03	.16460E-03
311	.70000E+00	.16890E+01	-.54207E-03	.32232E-03
312	.71900E+00	.17350E+01	-.50892E-03	.31498E-03
313	.73800E+00	.17810E+01	-.47742E-03	.30670E-03

259	.19380E+01	.37200E+00	-.24024E-02	-.18690E-03	314	.75700E+00	.18270E+01	-.44584E-03	.29579E-03
260	.18920E+01	.55200E+00	-.23040E-02	-.25863E-03	315	.77500E+00	.18740E+01	-.41345E-03	.28478E-03
261	.18270E+01	.72900E+00	-.21619E-02	-.30607E-03	316	.79400E+00	.19200E+01	-.38419E-03	.27181E-03
262	.17460E+01	.90200E+00	-.19798E-02	-.32263E-03	317	.53600E+00	.17490E+01	-.38718E-03	.36786E-03
263	.16470E+01	.10710E+01	-.17587E-02	-.30369E-03	318	.55000E+00	.17960E+01	-.36452E-03	.36745E-03
264	.15310E+01	.12360E+01	-.15026E-02	-.24265E-03	319	.56400E+00	.18440E+01	-.34166E-03	.36461E-03
265	.13980E+01	.13980E+01	-.12238E-02	-.14471E-03	320	.57800E+00	.18920E+01	-.31866E-03	.35979E-03
266	.19300E+01	.00000E+00	-.24801E-02	.00000E+00	321	.59300E+00	.19390E+01	-.29711E-03	.35449E-03
267	.19180E+01	.17900E+00	-.24635E-02	-.89186E-04	322	.60700E+00	.19870E+01	-.27459E-03	.34767E-03
268	.18900E+01	.35600E+00	-.24114E-02	-.16995E-03	323	.36400E+00	.17920E+01	-.24848E-03	.39313E-03
269	.18440E+01	.53800E+00	-.23195E-02	-.23276E-03	324	.37400E+00	.18410E+01	-.23565E-03	.39591E-03
270	.17810E+01	.70100E+00	-.21870E-02	-.27142E-03	325	.38300E+00	.18900E+01	-.22175E-03	.39735E-03
271	.17020E+01	.87000E+00	-.20143E-02	-.28150E-03	326	.39300E+00	.19380E+01	-.20779E-03	.39756E-03
272	.16060E+01	.10360E+01	-.18039E-02	-.25686E-03	327	.40200E+00	.19870E+01	-.19310E-03	.39706E-03
273	.14920E+01	.12010E+01	-.15496E-02	-.19450E-03	328	.41200E+00	.20360E+01	-.18087E-03	.39526E-03
274	.13620E+01	.13620E+01	-.12709E-02	-.10049E-03	329	.18500E+00	.18190E+01	-.12342E-03	.40340E-03
275	.18800E+01	.00000E+00	-.24824E-02	.00000E+00	330	.19000E+00	.18690E+01	-.11561E-03	.40843E-03

jac verification v shaft DEBONDED without friction 1/30/89 Low tol. TIME 00:00:00 DATE 00/00/00 JFT 2.0 01/30/88

SOLUTION TIME = .10000E+01

NODE	X	Y	UX	UY	NODE	X	Y	UX	UY
331	.19500E+00	.19180E+01	-.10971E-03	.41126E-03					
332	.20000E+00	.19680E+01	-.10284E-03	.41445E-03					
333	.20500E+00	.20170E+01	-.95972E-04	.41612E-03					
334	.21000E+00	.20670E+01	-.90438E-04	.41811E-03					
335	.00000E+00	.18300E+01	.00000E+00	.40673E-03					
336	.00000E+00	.18800E+01	.00000E+00	.41266E-03					
337	.00000E+00	.19300E+01	.00000E+00	.41583E-03					
338	.00000E+00	.19800E+01	.00000E+00	.41853E-03					
339	.00000E+00	.20300E+01	.00000E+00	.42103E-03					
340	.00000E+00	.20800E+01	.00000E+00	.42140E-03					
341	.15060E+01	.15060E+01	-.17704E-02	.33100E-03					
342	.16490E+01	.13440E+01	-.19553E-02	.28605E-03					
343	.17730E+01	.11740E+01	-.21241E-02	.23277E-03					
344	.18780E+01	.99800E+00	-.22505E-02	.18195E-03					
345	.19660E+01	.81300E+00	-.23497E-02	.14119E-03					
346	.20340E+01	.62100E+00	-.24138E-02	.10489E-03					
347	.20850E+01	.42200E+00	-.24575E-02	.72575E-04					
348	.21170E+01	.21500E+00	-.24755E-02	.35806E-04					
349	.21300E+01	.00000E+00	-.24766E-02	.00000E+00					
350	.13440E+01	.16490E+01	-.15587E-02	.38601E-03					
351	.11740E+01	.17730E+01	-.13413E-02	.42420E-03					
352	.99800E+00	.18780E+01	-.11279E-02	.45077E-03					
353	.81300E+00	.19660E+01	-.90762E-03	.45317E-03					
354	.62100E+00	.20340E+01	-.68910E-03	.45320E-03					
355	.42200E+00	.20850E+01	-.46769E-03	.43802E-03					
356	.21500E+00	.21170E+01	-.23983E-03	.43033E-03					
357	.00000E+00	.21300E+01	.00000E+00	.41915E-03					

jac verification v shaft DEBONDED without friction 1/30/89 Low tol. TIME 00:00:00 DATE 00/00/00 JFT 2.0 01/30/88

SOLUTION TIME = .10000E+01

ELEMENT	SIGX	SIGY	SIGZ	SIGXY	ELEMENT	SIGX	SIGY	SIGZ	SIGXY
1	-.50734E+01	-.40577E+01	-.20088E+01	.25076E+01	56	-.45970E+01	-.28845E+01	-.16459E+01	.29459E+00
2	-.36275E+01	-.30630E+01	-.14719E+01	.17305E+01	57	-.82983E+01	-.20436E+01	-.22752E+01	.49442E+00
3	-.20888E+01	-.17806E+01	-.85127E+00	.10390E+01	58	-.80958E+01	-.19965E+01	-.22203E+01	.72031E+00
4	-.14546E+01	-.93474E+00	-.52566E+00	.40879E+00	59	-.77515E+01	-.20550E+01	-.21574E+01	.93502E+00
5	-.13232E+01	-.10529E+00	-.31426E+00	-.17884E+00	60	-.73007E+01	-.21967E+01	-.20894E+01	.11249E+01
6	-.16958E+01	.39592E+00	-.28598E+00	-.50932E+00	61	-.67391E+01	-.23559E+01	-.20009E+01	.11527E+01
7	-.20053E+01	.10630E+01	-.20729E+00	-.51118E+00	62	-.61605E+01	-.25963E+01	-.19265E+01	.99157E+00
8	-.27958E+01	.13420E+01	-.31985E+00	-.25107E+00	63	-.56622E+01	-.28174E+01	-.18655E+01	.71767E+00
9	-.69168E+01	-.27567E+01	-.21282E+01	.22817E+01	64	-.54075E+01	-.29409E+01	-.18367E+01	.25020E+00
10	-.52194E+01	-.22598E+01	-.16454E+01	.21689E+01	65	-.81137E+01	-.22706E+01	-.22845E+01	.32751E+00
11	-.37800E+01	-.17170E+01	-.12093E+01	.18260E+01	66	-.79978E+01	-.22159E+01	-.22470E+01	.48692E+00
12	-.26750E+01	-.14652E+01	-.91085E+00	.12401E+01	67	-.78028E+01	-.22425E+01	-.22100E+01	.65440E+00
13	-.21215E+01	-.89892E+00	-.66449E+00	.68343E+00	68	-.74910E+01	-.23526E+01	-.21656E+01	.77029E+00
14	-.18754E+01	-.44412E+00	-.51030E+00	.19607E+00	69	-.70766E+01	-.24818E+01	-.21028E+01	.82793E+00
15	-.21724E+01	-.55174E-01	-.49007E+00	-.82078E-01	70	-.66560E+01	-.26565E+01	-.20487E+01	.77064E+00
16	-.23215E+01	.34737E+00	-.43430E+00	-.16436E+00	71	-.62892E+01	-.28366E+01	-.20077E+01	.53011E+00
17	-.78530E+01	-.18814E+01	-.21416E+01	.19729E+01	72	-.60546E+01	-.29490E+01	-.19808E+01	.20632E+00
18	-.66207E+01	-.18356E+01	-.18604E+01	.21874E+01	73	-.79605E+01	-.24403E+01	-.22882E+01	.21220E+00
19	-.51633E+01	-.16464E+01	-.14981E+01	.21250E+01	74	-.78863E+01	-.24281E+01	-.22692E+01	.33140E+00
20	-.37531E+01	-.16011E+01	-.11779E+01	.19037E+01	75	-.77838E+01	-.24287E+01	-.22467E+01	.46698E+00
21	-.28224E+01	-.13715E+01	-.92266E+00	.13772E+01	76	-.76150E+01	-.24888E+01	-.22228E+01	.57821E+00
22	-.24516E+01	-.12638E+01	-.81738E+00	.76778E+00	77	-.73406E+01	-.25791E+01	-.21823E+01	.60161E+00
23	-.22303E+01	-.88176E+00	-.68465E+00	.34416E+00	78	-.70275E+01	-.27192E+01	-.21443E+01	.55395E+00
24	-.24017E+01	-.73874E+00	-.69090E+00	.11167E+00	79	-.67420E+01	-.28555E+01	-.21115E+01	.39563E+00
25	-.84803E+01	-.15835E+01	-.22140E+01	.16040E+01	80	-.65874E+01	-.29399E+01	-.20960E+01	.15579E+00
26	-.74539E+01	-.14160E+01	-.19514E+01	.20001E+01	81	-.77797E+01	-.26631E+01	-.22974E+01	.12677E+00
27	-.61795E+01	-.16133E+01	-.17144E+01	.21832E+01	82	-.77911E+01	-.26319E+01	-.22931E+01	.20667E+00
28	-.49078E+01	-.17427E+01	-.14631E+01	.20351E+01	83	-.77662E+01	-.26442E+01	-.22903E+01	.30511E+00
29	-.38839E+01	-.17685E+01	-.12435E+01	.17527E+01	84	-.76378E+01	-.26452E+01	-.22623E+01	.37581E+00
30	-.30531E+01	-.17691E+01	-.10609E+01	.12143E+01	85	-.74750E+01	-.27135E+01	-.22415E+01	.41602E+00
31	-.27538E+01	-.17159E+01	-.98334E+00	.66846E+00	86	-.72906E+01	-.27934E+01	-.22185E+01	.39758E+00
32	-.25834E+01	-.16021E+01	-.92082E+00	.23196E+00	87	-.71102E+01	-.28808E+01	-.21980E+01	.28505E+00
33	-.86485E+01	-.14684E+01	-.22257E+01	.12607E+01	88	-.69924E+01	-.29614E+01	-.21898E+01	.95626E-01
34	-.79075E+01	-.14211E+01	-.20523E+01	.16712E+01	89	-.76052E+01	-.27890E+01	-.22867E+01	.64524E-01
35	-.69064E+01	-.15536E+01	-.18612E+01	.19673E+01	90	-.76414E+01	-.27982E+01	-.22967E+01	.11714E+00
36	-.58695E+01	-.17671E+01	-.16801E+01	.20203E+01	91	-.76398E+01	-.28181E+01	-.23008E+01	.17414E+00
37	-.48207E+01	-.20261E+01	-.15063E+01	.18111E+01	92	-.76186E+01	-.28364E+01	-.23001E+01	.24077E+00
38	-.39704E+01	-.21848E+01	-.13541E+01	.14299E+01	93	-.75527E+01	-.28838E+01	-.22960E+01	.28184E+00
39	-.33286E+01	-.22331E+01	-.12236E+01	.86500E+00	94	-.74536E+01	-.29485E+01	-.22885E+01	.26109E+00
40	-.30444E+01	-.22741E+01	-.11701E+01	.31138E+00	95	-.73649E+01	-.29998E+01	-.22802E+01	.20548E+00
41	-.86663E+01	-.15982E+01	-.22582E+01	.99029E+00	96	-.73110E+01	-.30352E+01	-.22762E+01	.78302E-01
42	-.81139E+01	-.15428E+01	-.21245E+01	.13284E+01	97	-.75433E+01	-.28152E+01	-.22789E+01	.22866E-01
43	-.74035E+01	-.16347E+01	-.19884E+01	.16135E+01	98	-.75447E+01	-.28299E+01	-.22824E+01	.38667E-01
44	-.65703E+01	-.18705E+01	-.18570E+01	.17821E+01	99	-.75412E+01	-.28546E+01	-.22871E+01	.55338E-01
45	-.56552E+01	-.21588E+01	-.17191E+01	.17147E+01	100	-.75558E+01	-.29278E+01	-.23064E+01	.77690E-01
46	-.47803E+01	-.24046E+01	-.15807E+01	.14106E+01	101	-.75333E+01	-.30162E+01	-.23209E+01	.92391E-01
47	-.41382E+01	-.25898E+01	-.14802E+01	.92174E+00	102	-.75166E+01	-.31466E+01	-.23459E+01	.11349E+00
48	-.38803E+01	-.27126E+01	-.14504E+01	.35259E+00	103	-.75008E+01	-.32787E+01	-.23715E+01	.86025E-01
49	-.85176E+01	-.18274E+01	-.22759E+01	.68974E+00	104	-.74868E+01	-.33512E+01	-.23844E+01	.30358E-01
50	-.81114E+01	-.17960E+01	-.21796E+01	.98245E+00	105	-.71727E+01	-.47912E+01	-.26321E+01	.32257E+01
51	-.76151E+01	-.18007E+01	-.20715E+01	.12483E+01	106	-.83468E+01	-.33657E+01	-.25767E+01	.23888E+01
52	-.70174E+01	-.20164E+01	-.19874E+01	.14479E+01	107	-.90497E+01	-.23207E+01	-.25015E+01	.17136E+01
53	-.62554E+01	-.22913E+01	-.18803E+01	.14493E+01	108	-.92500E+01	-.18882E+01	-.24504E+01	.12209E+01
54	-.55119E+01	-.25226E+01	-.17676E+01	.12445E+01	109	-.91[illegible]E+01	-.16152E+01	-.23761E+01	.86417E+00
55	-.49856E+01	-.27495E+01	-.17017E+01	.86856E+00	110	-.88755E+01	-.17638E+01	-.23406E+01	.62358E+00

jac verification v shaft DEBONDED without friction 1/30/89 Low tol. TIME 00:00:00 DATE 00/00/00 JFT 2.0 01/30/88

SOLUTION TIME = .10000E+01

ELEMENT	SIGX	SIGY	SIGZ	SIGXY	ELEMENT	SIGX	SIGY	SIGZ	SIGXY
111	-.86553E+01	-.19267E+01	-.23280E+01	.41722E+00	166	-.81992E+01	-.27979E+01	-.24194E+01	-.22535E+00
112	-.84168E+01	-.20985E+01	-.23134E+01	.30724E+00	167	-.79476E+01	-.27719E+01	-.24583E+01	-.16386E+00
113	-.81901E+01	-.22732E+01	-.23019E+01	.19059E+00	168	-.77131E+01	-.27801E+01	-.23085E+01	-.12547E+00
114	-.80046E+01	-.24732E+01	-.23051E+01	.13258E+00	169	-.75107E+01	-.28139E+01	-.22714E+01	-.40610E-01
115	-.78153E+01	-.26734E+01	-.23075E+01	.76264E-01	170	-.15600E+02	-.37428E+01	-.42993E+01	.32890E+01
116	-.76242E+01	-.27925E+01	-.22917E+01	.43985E-01	171	-.14318E+02	-.40849E+01	-.40487E+01	.21933E+01
117	-.75326E+01	-.28206E+01	-.22777E+01	.16666E-01	172	-.12852E+02	-.42774E+01	-.37684E+01	.13329E+01
118	-.94746E+01	-.54966E+01	-.32936E+01	.36215E+01	173	-.11558E+02	-.43144E+01	-.34919E+01	.54635E+00
119	-.96665E+01	-.39753E+01	-.30012E+01	.23881E+01	174	-.10581E+02	-.41520E+01	-.32412E+01	.27911E-01
120	-.98961E+01	-.29882E+01	-.28345E+01	.14265E+01	175	-.98480E+01	-.38768E+01	-.30195E+01	-.29518E+00
121	-.97523E+01	-.23783E+01	-.26687E+01	.88213E+00	176	-.92346E+01	-.35819E+01	-.28196E+01	-.38484E+00
122	-.96558E+01	-.20641E+01	-.25784E+01	.53215E+00	177	-.87680E+01	-.33766E+01	-.26718E+01	-.41016E+00
123	-.93285E+01	-.20217E+01	-.24971E+01	.32436E+00	178	-.84142E+01	-.31336E+01	-.25418E+01	-.33628E+00
124	-.89115E+01	-.20306E+01	-.24073E+01	.19201E+00	179	-.81315E+01	-.30071E+01	-.24505E+01	-.25092E+00
125	-.86009E+01	-.21816E+01	-.23722E+01	.14002E+00	180	-.79074E+01	-.29022E+01	-.23781E+01	-.17827E+00
126	-.83227E+01	-.23384E+01	-.23454E+01	.85088E-01	181	-.76951E+01	-.28353E+01	-.23167E+01	-.14586E+00
127	-.81029E+01	-.24716E+01	-.23264E+01	.63964E-01	182	-.74513E+01	-.28386E+01	-.22638E+01	-.47684E-01
128	-.78825E+01	-.26184E+01	-.23102E+01	.17336E-01	183	-.16651E+02	-.28245E+01	-.42845E+01	.22551E+01
129	-.76543E+01	-.27609E+01	-.22914E+01	.34499E-02	184	-.15021E+02	-.33726E+01	-.40467E+01	.16250E+01
130	-.75471E+01	-.28262E+01	-.22821E+01	.17458E-01	185	-.13423E+02	-.40112E+01	-.38356E+01	.10197E+01
131	-.11241E+02	-.57095E+01	-.37290E+01	.39702E+01	186	-.12040E+02	-.42852E+01	-.35915E+01	.45876E+00
132	-.10931E+02	-.46821E+01	-.34349E+01	.24404E+01	187	-.10847E+02	-.43615E+01	-.33458E+01	.52269E-01
133	-.10713E+02	-.37252E+01	-.31763E+01	.12947E+01	188	-.99095E+01	-.42084E+01	-.31059E+01	-.20632E+00
134	-.10350E+02	-.30021E+01	-.29374E+01	.66979E+00	189	-.91923E+01	-.39956E+01	-.29013E+01	-.27130E+00
135	-.99295E+01	-.25419E+01	-.27437E+01	.19642E+00	190	-.86662E+01	-.36830E+01	-.27168E+01	-.27953E+00
136	-.95170E+01	-.23352E+01	-.26075E+01	-.13637E-01	191	-.83214E+01	-.34179E+01	-.25826E+01	-.25546E+00
137	-.91066E+01	-.22650E+01	-.25017E+01	-.57453E-01	192	-.80780E+01	-.31896E+01	-.24789E+01	-.20996E+00
138	-.87581E+01	-.23339E+01	-.24402E+01	-.64662E-01	193	-.78616E+01	-.30341E+01	-.23971E+01	-.13492E+00
139	-.84329E+01	-.24078E+01	-.23849E+01	-.73539E-01	194	-.76546E+01	-.29169E+01	-.23257E+01	-.11234E+00
140	-.81289E+01	-.25065E+01	-.23398E+01	-.41318E-01	195	-.73792E+01	-.28397E+01	-.22482E+01	-.44591E-01
141	-.79285E+01	-.26369E+01	-.23244E+01	-.36756E-01	196	-.17209E+02	-.20936E+01	-.42465E+01	.90358E+00
142	-.77050E+01	-.27411E+01	-.22981E+01	-.40503E-01	197	-.15465E+02	-.28878E+01	-.40377E+01	.51577E+00
143	-.75428E+01	-.28116E+01	-.22780E+01	-.64586E-02	198	-.13854E+02	-.37599E+01	-.38750E+01	.35012E+00
144	-.13173E+02	-.55127E+01	-.41109E+01	.42020E+01	199	-.12251E+02	-.41657E+01	-.36117E+01	.17927E+00
145	-.12174E+02	-.48715E+01	-.37501E+01	.25472E+01	200	-.10928E+02	-.44325E+01	-.33792E+01	.46041E-01
146	-.11421E+02	-.42403E+01	-.34454E+01	.13572E+01	201	-.98893E+01	-.43922E+01	-.31419E+01	-.42472E-01
147	-.10791E+02	-.36116E+01	-.31686E+01	.51209E+00	202	-.91611E+01	-.41805E+01	-.29352E+01	-.11344E+00
148	-.10197E+02	-.31793E+01	-.29427E+01	.51017E-02	203	-.86520E+01	-.38871E+01	-.27586E+01	-.11138E+00
149	-.96854E+01	-.28538E+01	-.27586E+01	-.21127E+00	204	-.82922E+01	-.35739E+01	-.26106E+01	-.81525E-01
150	-.92324E+01	-.26882E+01	-.26225E+01	-.25600E+00	205	-.80437E+01	-.33051E+01	-.24966E+01	-.67775E-01
151	-.88197E+01	-.26027E+01	-.25129E+01	-.22990E+00	206	-.78411E+01	-.31229E+01	-.24121E+01	-.55156E-01
152	-.84715E+01	-.25990E+01	-.24355E+01	-.23367E+00	207	-.76581E+01	-.29694E+01	-.23380E+01	-.47242E-01
153	-.81773E+01	-.26321E+01	-.23781E+01	-.13804E+00	208	-.73579E+01	-.28568E+01	-.22472E+01	-.14969E-01
154	-.79322E+01	-.26649E+01	-.23314E+01	-.10901E+00	209	-.28325E+01	-.17459E+02	-.30438E+01	.79987E+00
155	-.77126E+01	-.27562E+01	-.23031E+01	-.83902E-01	210	-.22753E+01	-.17043E+02	-.28978E+01	.22287E+01
156	-.75432E+01	-.28096E+01	-.22776E+01	-.22003E-01	211	-.24426E+01	-.16600E+02	-.28565E+01	.36386E+01
157	-.14653E+02	-.46197E+01	-.42400E+01	.38316E+01	212	-.31232E+01	-.15468E+02	-.27887E+01	.49455E+01
158	-.13297E+02	-.47434E+01	-.39688E+01	.25379E+01	213	-.38951E+01	-.13984E+02	-.26818E+01	.60289E+01
159	-.12021E+02	-.43724E+01	-.36065E+01	.14536E+01	214	-.51394E+01	-.12199E+02	-.26008E+01	.66937E+01
160	-.11168E+02	-.41498E+01	-.33700E+01	.55107E+00	215	-.66695E+01	-.10519E+02	-.25782E+01	.65560E+01
161	-.10473E+02	-.37537E+01	-.31298E+01	-.43851E-01	216	-.71924E+01	-.80300E+01	-.22834E+01	.59136E+01
162	-.98054E+01	-.34036E+01	-.29060E+01	-.30546E+00	217	-.20765E+01	-.16589E+02	-.27998E+01	.72227E+00
163	-.92565E+01	-.31245E+01	-.27238E+01	-.40327E+00	218	-.19867E+01	-.16112E+02	-.27147E+01	.21367E+01
164	-.88035E+01	-.29798E+01	-.25923E+01	-.35513E+00	219	-.20778E+01	-.15472E+02	-.26324E+01	.36069E+01
165	-.84737E+01	-.28552E+01	-.24924E+01	-.32101E+00	220	-.24875E+01	-.14192E+02	-.25019E+01	.49411E+01

jac verification v shaft DEBONDED without friction 1/30/89 Low tol. TIME 00:00:00 DATE 00/00/00 JFT 2.0 01/30/88

SOLUTION TIME = .10000E+01

ELEMENT	SIGX	SIGY	SIGZ	SIGXY	ELEMENT	SIGX	SIGY	SIGZ	SIGXY
221	-.31949E+01	-.12876E+02	-.24106E+01	.59400E+01	276	-.14822E+02	-.40189E+01	-.28261E+01	.64215E+01
222	-.44060E+01	-.11568E+02	-.23960E+01	.64367E+01	277	-.13262E+02	-.42765E+01	-.26308E+01	.54540E+01
223	-.62808E+01	-.98054E+01	-.24129E+01	.64710E+01	278	-.12011E+02	-.41978E+01	-.24313E+01	.45230E+01
224	-.77164E+01	-.76854E+01	-.23103E+01	.61407E+01	279	-.10713E+02	-.46549E+01	-.23051E+01	.35427E+01
225	-.17297E+01	-.15771E+02	-.26250E+01	.64327E+00	280	-.89681E+01	-.46784E+01	-.20470E+01	.31020E+01
226	-.13794E+01	-.15192E+02	-.24857E+01	.20069E+01	281	-.17728E+02	-.25953E+01	-.30486E+01	.67101E+01
227	-.15940E+01	-.14429E+02	-.24034E+01	.32800E+01	282	-.15967E+02	-.29514E+01	-.28378E+01	.54078E+01
228	-.22995E+01	-.13373E+02	-.23509E+01	.43931E+01	283	-.14227E+02	-.36820E+01	-.26863E+01	.47090E+01
229	-.28973E+01	-.12109E+02	-.22510E+01	.53381E+01	284	-.12483E+02	-.33102E+01	-.23690E+01	.40823E+01
230	-.39135E+01	-.10806E+02	-.22080E+01	.61437E+01	285	-.11241E+02	-.38173E+01	-.22588E+01	.32024E+01
231	-.55610E+01	-.89948E+01	-.21834E+01	.66821E+01	286	-.95501E+01	-.37681E+01	-.19977E+01	.26635E+01
232	-.74416E+01	-.74591E+01	-.22351E+01	.65434E+01	287	-.18470E+02	-.15502E+01	-.30030E+01	.47381E+01
233	-.10233E+01	-.14898E+02	-.23883E+01	.65532E+00	288	-.16608E+02	-.22290E+01	-.28256E+01	.42364E+01
234	-.95426E+00	-.14253E+02	-.22811E+01	.20757E+01	289	-.14847E+02	-.26147E+01	-.26193E+01	.38469E+01
235	-.12074E+01	-.13095E+02	-.21453E+01	.33983E+01	290	-.13285E+02	-.25327E+01	-.23726E+01	.33606E+01
236	-.18151E+01	-.11921E+02	-.20604E+01	.44362E+01	291	-.11904E+02	-.29396E+01	-.22266E+01	.26263E+01
237	-.25397E+01	-.10751E+02	-.19937E+01	.51740E+01	292	-.10446E+02	-.30085E+01	-.20181E+01	.23746E+01
238	-.35449E+01	-.99006E+01	-.20168E+01	.57766E+01	293	-.18150E+02	-.72376E+00	-.28311E+01	.30948E+01
239	-.53487E+01	-.90154E+01	-.21546E+01	.62241E+01	294	-.16902E+02	-.14825E+01	-.27577E+01	.27010E+01
240	-.75443E+01	-.79387E+01	-.23224E+01	.65523E+01	295	-.15301E+02	-.13814E+01	-.25024E+01	.26461E+01
241	-.77029E+00	-.14174E+02	-.22416E+01	.65855E+00	296	-.13888E+02	-.17456E+01	-.23451E+01	.24479E+01
242	-.75991E+00	-.13374E+02	-.21202E+01	.18839E+01	297	-.12700E+02	-.17449E+01	-.21668E+01	.17366E+01
243	-.13446E+01	-.12206E+02	-.20325E+01	.29203E+01	298	-.11199E+02	-.17721E+01	-.19457E+01	.16655E+01
244	-.17391E+01	-.10924E+02	-.18995E+01	.38758E+01	299	-.18080E+02	-.32558E-01	-.27168E+01	.11680E+01
245	-.21681E+01	-.97305E+01	-.17848E+01	.46676E+01	300	-.16825E+02	-.12032E+01	-.27042E+01	.84826E+00
246	-.28310E+01	-.88722E+01	-.17555E+01	.52238E+01	301	-.15426E+02	-.10100E+01	-.24654E+01	.93897E+00
247	-.43197E+01	-.84048E+01	-.19087E+01	.61337E+01	302	-.14117E+02	-.12549E+01	-.23057E+01	.90476E+00
248	-.69561E+01	-.79295E+01	-.22328E+01	.70134E+01	303	-.13009E+02	-.15948E+01	-.21905E+01	.72214E+00
249	-.27947E+00	-.13563E+02	-.20764E+01	.83640E+00	304	-.12703E+02	-.19531E+01	-.20930E+01	.92069E+00
250	-.29271E+00	-.12066E+02	-.18539E+01	.27255E+01					
251	-.53919E+00	-.10877E+02	-.17124E+01	.27759E+01					
252	-.11913E+01	-.97732E+01	-.16447E+01	.35151E+01					
253	-.19091E+01	-.86563E+01	-.15848E+01	.40164E+01					
254	-.28290E+01	-.79877E+01	-.16225E+01	.45369E+01					
255	-.36896E+01	-.79617E+01	-.17477E+01	.53989E+01					
256	-.63541E+01	-.86915E+01	-.22568E+01	.72310E+01					
257	-.96932E+01	-.79577E+01	-.26476E+01	.84430E+01					
258	-.93054E+01	-.73090E+01	-.24922E+01	.75347E+01					
259	-.92562E+01	-.72495E+01	-.24759E+01	.66187E+01					
260	-.89270E+01	-.66893E+01	-.23424E+01	.60978E+01					
261	-.85126E+01	-.67055E+01	-.22827E+01	.55410E+01					
262	-.77474E+01	-.62806E+01	-.21742E+01	.50872E+01					
263	-.11872E+02	-.64263E+01	-.27447E+01	.85769E+01					
264	-.11265E+02	-.61624E+01	-.26141E+01	.75558E+01					
265	-.10671E+02	-.62767E+01	-.25422E+01	.64932E+01					
266	-.10172E+02	-.62687E+01	-.24661E+01	.55443E+01					

267	-.94299E+01	-.59768E+01	-.23110E+01	.47614E+01
268	-.86261E+01	-.60993E+01	-.22088E+01	.42810E+01
269	-.14271E+02	-.51950E+01	-.29199E+01	.82912E+01
270	-.13177E+02	-.50488E+01	-.27339E+01	.70612E+01
271	-.12082E+02	-.51147E+01	-.25795E+01	.60356E+01
272	-.11250E+02	-.52460E+01	-.24743E+01	.48735E+01
273	-.10270E+02	-.53200E+01	-.23386E+01	.40935E+01
274	-.87164E+01	-.53426E+01	-.21088E+01	.36985E+01
275	-.16287E+02	-.38270E+01	-.30170E+01	.76094E+01

1jac verification v shaft DEBONDED without friction 1/30/89 Low tol. TIME 00:00:00 DATE 00/00/00 JFT 2.0 01/30/88

SOLUTION TIME = .10000E+01

SLIDING INTERFACE PARAMETERS

INTERFACE NUMBER 1

NUMBER	MASTER ELEMENT	SLAVE NODE	ISPRG	ETA	NORMAL DISPLACEMENT	NORMAL FORCE
1	1	357	1	.100000E+01	.000000E+00	-.227417E+00
2	1	356	1	-.998555E+00	-.238883E-06	-.381965E+00
3	2	355	1	-.997086E+00	.244730E-06	-.464330E+00
4	3	354	1	-.995626E+00	.000000E+00	-.562875E+00
5	4	353	1	-.994216E+00	.000000E+00	-.626518E+00
6	5	352	1	-.992996E+00	-.133256E-06	-.691639E+00
7	6	351	1	-.992050E+00	-.163491E-06	-.686158E+00
8	7	350	1	-.991606E+00	-.962325E-07	-.587650E+00
9	8	341	1	-.991509E+00	.000000E+00	-.447283E+00
10	9	342	1	-.991665E+00	.894746E-07	-.382844E+00
11	10	343	1	-.992027E+00	.000000E+00	-.261911E+00
12	11	344	1	-.992783E+00	.304850E-07	-.197789E+00
13	12	345	1	-.993946E+00	.000000E+00	-.227953E+00
14	13	346	1	-.995290E+00	.198612E-07	-.320658E+00
15	14	347	1	-.996784E+00	-.253138E-06	-.419602E+00
16	15	348	1	-.998404E+00	.000000E+00	-.546447E+00
17	16	349	1	-.100000E+01	.238850E-06	-.314688E+00

PLOT TAPE11 HAS BEEN WRITTEN AT TIME .10000000E+01

RESTART TAPE30 HAS BEEN WRITTEN AT TIME .10000000E+01

APPENDIX C

SOURCE CODE LISTING

```
      PROGRAM SHAFT
C
C  ANALYTICAL SOLUTIONS FOR A LINER WITHIN A CIRCULAR HOLE.
C
C  CALCULATION OF DISPLACEMENTS AND STRESSES IN A LINER AND MEDIUM
C  AS A RESULT OF HOOP DEFORMATION AND PURE SHEAR
C
C  Equations for Hoop Deformation were originally derived by C.M.St.John
C  and documented in a report to the Defense Nuclear Agency:
C      "An Investigation of the Failure Resistance of Rockbolted
C       Tunnels for Deep Missile Basing"
C              Report R-8227-5534
C                Agbabian Associates, El Segundo, California
C                September 1983
C
C  The hoop deformation calculations were subsequently incorporated in
C  the Salt Repository Shaft Design Guide prepared for the Department of
C  Energy, under the direction of the Office of Nuclear Waste Isolation,
C  Battelle Project Management Division, by Fluor Technologies, and
C  Parson's Brinckerhoff/PB-KBB. Addition to the hoop deformation
C  calculations to allow for consideration of axial strain and derivation
C  of equations for liner-medium interaction as a result of pure shear
C  were completed by C.M.St.John under contract to Morrison-Knudsen
C  Engineers Inc., a subcontactor to Fluor Technologies, during
C  development of the methodology for design against seismic loads.
C
C  This version of the program, and its associated documentation was
C  prepared by C.M.St.John under a contract between Parson's Brinckerhoff
C  and J.F.T.Agapito and Assocites.
C
C  Any questions regarding this code should be addressed to:
C          Dr. Michael P. Hardy            Tel: (303) 242 4220
C          J.F.T. Agapito and Associates
C          715 Horizon Drive, Suite 340
C          Grand Junction, CO 81506
C
C      Code Version 3.02                 January 20 1989
C.............................................................
C      Update record                                        .
C.............................................................
C     Added the logical variable FLAG to control printing   .
C     after making choice between stress or strain input.   .
C                                          Nov 7 1987       .
C     Added ALPHA = 0.0 as initial value before calculating .
C     the principal stresses.                               .
C                                          Nov 7 1987       .
C     Deleted the simplified liner analysis incorporated in .
C     version 2.0 of this code. The anlysis method was      .
C     confusing and very conservative.                      .
C                                          April 29 1988    .
C     Added extra titles to clarify output file             .
C                                          April 29 1988    .
C     Implemented under Microsoft Fortran 77, Version 4.01  .
C                                          April 29 1988    .
C     Implemented under Microsoft Fortran 77, Version 4.10  .
C                                          January 20 1989  .
C     Added displacement plots to screen and hard copy      .
C     outputs for automatically generated points            .
C                                          January 20 1989  .
C     Added equation numbers from text where appropriate    .
C                                          January 20 1989  .
C     Output modified to clarify input stresses and strains .
C                                          January 20 1989  .
C.............................................................
C
C    VARIABLES LISTING
C
C       FILEN   Name of file for storing output
C       RADII   List of radial distances to sample points
C       THETAS  List of angles to sample points
C       RAD     Radius of unlined hole
C       THICK   Liner thickness
C       ES      Modulus of medium
C       NUS     Poisson's ratio of medium
C       ELS     Modulus of liner
C       NULS    Poisson's ratio of liner
C       E       Effective modulus for medium
C       NU      Effective Poisson's ratio for medium
C       EL      Effective modulus for liner
C       NUL     Effective Poisson's ratio for liner
C       G       Shear modulus of medium
```

```
C       GL      Shear modulus of liner
C       LAM     Lame's parameter, Lambda, for medium
C       LAML    Lame's parameter, Lambda, for liner
C       PLANE   Switch for plane stress (F) or strain (T)
C       SLIP    Switch for slip (T) or no slip (F)
C       AUTO    Switch for automatic (T) or manual sampling (F)
C       FLAG    Switch for stress (T) or strain (F) input
C       SX      Remote xx stress
C       SY      Remote yy stress
C       SXY     Remote xy stress
C       SZX     Remote zx stress
C       SZY     Remote zy stress
C       ESX     Remote xx strain
C       ESY     Remote yy strain
C       ESXY    Remote xy strain
C       ESZX    Remote zx strain
C       ESZY    Remote zy strain
C       SIG1    Remote major principal stress
C       SIG3    Remote minor principal stress
C       ALPHA   Angle of major principal stress
C       ESZ     Axial strain
C       SZ      Remote axial stress
C       P       Remote mean stress
C       S       Remote deviator stress
C       R       Radial distance to sample point
C       TH      Angle to sample point
C       U       Radial displacement at sample point
C       V       Tangential displacement at sample point
C       SR      Radial stress at sample point
C       ST      Tangential stress at sample point
C       TRT     In-plane shear stress at sample point
C       W       Axial displacement due to out-of-plane shear
C       SRZ     RZ shear stress on cross-section
C       SRT     RT shear stress on cross-section
C
C  ALLOW UP TO 100*100 MANUALLY GENERATED SAMPLE POINTS
C  AND UP TO 20 POINTS GENERATED AUTOMATICALLY FOR THE LINER
C
      DIMENSION RADII(100),THETAS(100),ARADI(20),ATHETA(2)                SHA  2
C
C  DIMENSION HERE MUST BE EQUAL OR EXCEED NUM IN THE DATA STATEMENT BELOW
C
      DIMENSION SRAD(2,20),STHET(2,20),SAXL(2,20),SRZS(2,20),STZS(2,20),  SHA  3
     . UARRAY(2,20),VARRAY(2,20),WARRAY(2,20)                             SHA  4
      REAL NU,NUS,NUL,NULS,LAM,LAML                                       SHA  5
      INTEGER*2 IHH,IMM,ISS,IYY,IDD                                       SHA  6
      LOGICAL STRAIN,SLIP,AUTO,FLAG                                       SHA  7
      COMMON /MAT/ RAD,THICK,E,NU,EL,NUL,A,C,D,AL,CL,DL,P,S,              SHA  8
     + ES,ELS,NUS,NULS,STRAIN,ESZ,G,GL,SZX,SZY                            SHA  9
      CHARACTER*40 NAME                                                   SHA 10
      CHARACTER*80 TITLE                                                  SHA 11
      CHARACTER*64 FILEN                                                  SHA 12
      CHARACTER*10 QA                                                     SHA 13
      CHARACTER*8 CTIME,CDATE                                             SHA 14
      CHARACTER*1 ICH                                                     SHA 15
C  QA DESIGNATION
      DATA QA/'SHAFT 3.02'/                                               SHA 16
C  NUMBER OF SAMPLES THROUGH THE LINER
      DATA NUM/10/                                                        SHA 17
C
C  THE FOLLOWING INTERACTIONS ARE FOR THE KEYBOARD AND SCREEN
C  AS IMPLEMENTED THESE ARE DEVICE 9
C
      WRITE(0,1)                                                          SHA 18
1     FORMAT(13(/))                                                       SHA 19
      WRITE(0,'(A,A)')' Code: SHAFT.  Version 3.02, upgraded for ',       SHA 20
     . 'SANDIA/NNWSI Jan 20, 1989'                                        SHA 21
      WRITE(0,'(A)')' Analytical solutions for a lined circular hole'     SHA 22
      WRITE(0,'(A)')' Solutions derived by C.M.St.John '                  SHA 23
      WRITE(0,'(A)')'                J.F.T. Agapito and Associates'       SHA 24
      WRITE(0,'(A)')'                Grand Junction (303) 242 4220 '      SHA 25
      WRITE(0,'(/)')                                                      SHA 26
      WRITE(0,'(A,A10)')' The QA number of this code is:   ',QA           SHA 27
      CALL CLOCK(CTIME)                                                   SHA 28
      WRITE(0,2002) CTIME                                                 SHA 29
      CALL DATED(CDATE)                                                   SHA 30
      WRITE(0,2003)  CDATE                                                SHA 31
      WRITE(0,'(A,A)')' Check that time, date and version number ',       SHA 32
     . 'are correct'                                                      SHA 33
      PAUSE ' Hit ENTER key to continue...'                               SHA 34
C
```

```
C  ENTER THE NAME OF THE FILE IN WHICH OUTPUT WILL BE SAVED
C
      WRITE(0,'(//A)')' Problem title (80 char.) ? '                    SHA 35
      READ(0,'(A80)') TITLE                                             SHA 36
      WRITE(0,'(A\)')' What is your name or your reference ?  '         SHA 37
      READ(0,'(A10)') NAME                                              SHA 38
      WRITE(0,'(/)')                                                    SHA 39
      WRITE(0,'(A\)')' Type the name of the file for saving output.... '  SHA 40
      READ(0,'(A64)') FILEN                                             SHA 41
      OPEN(6,FILE=FILEN,ACCESS='SEQUENTIAL',STATUS='NEW')               SHA 42
C
C  SECTION 1 - Define geometry, material properties and sample points
C
      WRITE(0,'(/)')                                                    SHA 43
      WRITE(0,'(A\)')' What is the excavated radius of hole ? .... '    SHA 44
      READ (0,*) RAD                                                    SHA 45
      WRITE(0,'(A\)')' What is the thickness of the liner ? .... '      SHA 46
      READ (0,*) THICK                                                  SHA 47
      WRITE(0,'(A\)')' Enter the rock, or soil, elastic modulus .... '  SHA 48
      READ (0,*) E                                                      SHA 49
      WRITE(0,'(A\)')' Enter the rock, or soil, Poissons ratio .... '   SHA 50
      READ (0,*) NU                                                     SHA 51
      WRITE(0,'(A\)')' Enter the liner elastic modulus .... '           SHA 52
      READ (0,*) EL                                                     SHA 53
      WRITE(0,'(A\)')' Enter the liner Poissons ratio.... '             SHA 54
      READ (0,*) NUL                                                    SHA 55
C
C    SELECT PLANE STRESS OR PLANE STRAIN
C
      WRITE(0,'(/)')                                                    SHA 56
      WRITE(0,'(A\)')' Do you want plane stress ?  (y/n) '              SHA 57
      READ (0,'(A1)') ICH                                               SHA 58
      WRITE(0,'(/)')                                                    SHA 59
      IF(ICH.EQ.'Y'.OR.ICH.EQ.'y') THEN                                 SHA 60
          WRITE(0,'(A)') ' Plane stress selected '                      SHA 61
          STRAIN=.FALSE.                                                SHA 62
        ELSE                                                            SHA 63
          WRITE(0,'(A)') ' Plane strain selected '                      SHA 64
          STRAIN=.TRUE.                                                 SHA 65
      ENDIF                                                             SHA 66
C
C    SELECT TYPE OF CONDITION BETWEEN LINER AND ROCK
C
      WRITE(0,'(/)')                                                    SHA 67
      WRITE(0,'(A\)')' Do you want bonding of liner to medium ? (y/n) '  SHA 68
      READ (0,'(A1)') ICH                                               SHA 69
      WRITE(0,'(/)')                                                    SHA 70
      IF(ICH.EQ.'Y'.OR.ICH.EQ.'y') THEN                                 SHA 71
           SLIP=.FALSE.                                                 SHA 72
           WRITE(0,'(A)') ' No slip allowed behind liner '              SHA 73
         ELSE                                                           SHA 74
           SLIP=.TRUE.                                                  SHA 75
           WRITE(0,'(A)') ' Slip allowed behind liner '                 SHA 76
      ENDIF                                                             SHA 77
C
C  SELECT MANUAL OR AUTOMATIC SAMPLING
C
      WRITE(0,'(/)')                                                    SHA 78
      WRITE(0,'(A\)')                                                   SHA 79
     + ' Do you want to input sample points manually ? (y/n) '          SHA 80
      READ (0,'(A1)') ICH                                               SHA 81
      WRITE(0,'(/)')                                                    SHA 82
      IF(ICH.NE.'Y'.AND.ICH.NE.'y') THEN                                SHA 83
                AUTO=.TRUE.                                             SHA 84
                ELSE                                                    SHA 85
                AUTO=.FALSE.                                            SHA 86
                ENDIF                                                   SHA 87
                WRITE(0,'(A)')                                          SHA 88
     +          ' Liner stresses will be generated automatically '     SHA 89
C
C  GENERATE SAMPLE POINTS - THE NUMBER IS DEFINED IN A DATA STATEMENT
C  AND THE SAMPLE LINES CORRESPOND TO MAXIMUM AND MINIMUM VALUES
C  OF THE STRESSES
C
                ATHETA(1)=0.0                                           SHA 90
                ATHETA(2)=90.0                                          SHA 91
                TINC = THICK/FLOAT(NUM-1)                               SHA 92
                RADI = RAD - THICK                                      SHA 93
                ARADI(1) = RADI                                         SHA 94
                DO 5 I=2,NUM                                            SHA 95
    5           ARADI(I) = RADI + TINC*FLOAT(I-1)                       SHA 96
```

```
      IF(.NOT.AUTO) THEN                                                SHA 97
            WRITE(0,'(A)') ' Sample points for liner and medium '       SHA 98
            WRITE(0,'(A)') ' are to be entered next '                   SHA 99
C
C    ENTER SAMPLE POINTS
C
      WRITE(0,'(/)')                                                    SHA100
      WRITE(0,'(A)')'   The next data defines the sample points'        SHA101
      WRITE(0,'(A)')'   assumed to be on a grid around the shaft'       SHA102
      WRITE(0,'(A)')' Radial and angular coordinates define the grid'   SHA103
      WRITE(0,'(/)')                                                    SHA104
      WRITE(0,'(A)')' Enter one radial distance at the time,'           SHA105
      WRITE(0,'(A)')' ending each number with <RETURN>.'                SHA106
      WRITE(0,'(A)')' Terminate the list with any negative number '     SHA107
      WRITE(0,'(/)')                                                    SHA108
      DO 10 I=1,20                                                      SHA109
            WRITE(0,'(13H Radial Point,I2,3H ? ,\ )') I                 SHA110
            READ (0,*) R                                                SHA111
            IF(R.LT.0.) GO TO 20                                        SHA112
            RADII(I)=R                                                  SHA113
 10         CONTINUE                                                    SHA114
 20   NRAD=I-1                                                          SHA115
      WRITE(0,'(/)')                                                    SHA116
      WRITE(0,'(A)')' Enter one angle at the time, '                    SHA117
      WRITE(0,'(A)')' in the same manner as the radial distances '      SHA118
      WRITE(0,'(A)')' Angles are counterclockwise relative to x axis '  SHA119
      WRITE(0,'(/)')                                                    SHA120
      DO 30 J=1,20                                                      SHA121
            WRITE(0,'(22H Circumferential Point,I2,3H ? ,\ )') J        SHA122
            READ (0,*) TH                                               SHA123
            IF(TH.LT.0.0) GO TO 40                                      SHA124
            THETAS(J)=TH                                                SHA125
 30         CONTINUE                                                    SHA126
 40   NTHETA=J-1                                                        SHA127
    ENDIF                                                               SHA128
C
C  COMPUTE ELASTIC PARAMETERS NEEDED FOR THE ANALYSES
C
    G=E/(2.*(1.+NU))                                                    SHA129
    LAM=E*NU/((1.+NU)*(1.-2.*NU))                                       SHA130
    GL=EL/(2.*(1.+NUL))                                                 SHA131
    LAML=EL*NUL/((1.+NUL)*(1.-2.*NUL))                                  SHA132
C
C    SAVE ORIGINAL VALUES OF ELASTIC CONSTANTS
C
    ES=E                                                                SHA133
    NUS=NU                                                              SHA134
    ELS=EL                                                              SHA135
    NULS=NUL                                                            SHA136
C
C    CALCULATE EFFECTIVE ELASTIC CONSTANTS FOR
C    PLANE STRAIN ANALYSES
C
    IF(STRAIN) THEN                                                     SHA137
        E=E/(1.0-NU*NU)                                                 SHA138
        NU=NU/(1.0-NU)                                                  SHA139
        EL=EL/(1.0-NUL*NUL)                                             SHA140
        NUL=NUL/(1.0-NUL)                                               SHA141
    ENDIF                                                               SHA142
                                                                        SHA143
C
C    PRINT OUT INPUT DATA
C
    WRITE(6,5000)                                                       SHA144
5000 FORMAT(//                                                          SHA145
   .1X,'*****************************************************',        SHA146
   .'*************************************'/                             SHA147
   .1X,'*                                                   ',         SHA148
   .'                                    *'/                            SHA149
   .1X,'*      SSSSSSSS       HH        HH           AA      ',         SHA150
   .'      FFFFFFFFFFF   TTTTTTTTTTTTTT  *'/                             SHA151
   .1X,'*     SS     SSS      HH        HH          AAAA     ',         SHA152
   .'      FFFFFFFFFFF   TTTTTTTTTTTTTT  *'/                             SHA153
   .1X,'*    SS              HH        HH         AA  AA    ',         SHA154
   .'      FF                 TT         *'/                             SHA155
   .1X,'*     SSS             HHHHHHHHHHHH        AA    AA  ',          SHA156
   .'      FF                 TT         *'/                             SHA157
   .1X,'*        SSS          HHHHHHHHHHHH       AAAAAAAAAA ',           SHA158
   .'      FFFFFF             TT         *'/                             SHA159
   .1X,'*           SSS       HH        HH      AAAAAAAAAAAA',           SHA160
   .'      FFFFFF             TT         *'/                             SHA161
```

```
     .1X,'*              SS       HH        HH      AA           A',          SHA162
     .'A     FF                    TT          */                              SHA163
     .1X,'*    SSS      SS        HH        HH     AA            ',           SHA164
     .'AA    FF                    TT          */                              SHA165
     .1X,'*      SSSSSSSS         HH        HH     AA            ',           SHA166
     .'AA    FF                    TT          */                              SHA167
     .1X,'*                                                      ',            SHA168
     .'                                        */                              SHA169
     .1X,'*****************************************************',             SHA170
     .'*************************************'//)                               SHA171
      WRITE(6,'(A)')' Analytical solutions for a lined circular hole'          SHA172
      WRITE(6,'(/)')                                                           SHA173
      WRITE(6,'(A,A)')' Code: SHAFT.  Version 3.02, upgraded for ',            SHA174
     . 'SANDIA/NNWSI Jan 20, 1989'                                             SHA175
      WRITE(6,'(A)')'                J.F.T. Agapito and Associates'            SHA176
      WRITE(6,'(A)')'                Grand Junction (303) 242 4220 '           SHA177
      WRITE(6,'(//A80)')TITLE                                                  SHA178
      WRITE(6,2001) NAME,QA                                                    SHA179
 2001 FORMAT(//' Analysis completed by :',A40/                                 SHA180
     .         ' The QA version of this code is : ',A10/)                      SHA181
C
      IF(STRAIN) THEN                                                          SHA182
        WRITE(6,'(A)')' Plane strain analysis '                                SHA183
        ELSE                                                                   SHA184
        WRITE(6,'(A)')' Plane stress analysis '                                SHA185
      ENDIF                                                                    SHA186
      WRITE(6,'(/)')                                                           SHA187
      IF(SLIP) THEN                                                            SHA188
        WRITE(6,'(A)')' Slip allowed between liner and shaft wall '            SHA189
        ELSE                                                                   SHA190
        WRITE(6,'(A)')                                                         SHA191
     + ' Bonding between shaft wall and liner is assumed  '                    SHA192
      ENDIF                                                                    SHA193
      WRITE(6,'(/)')                                                           SHA194
      WRITE(6,'(A)') ' Geometry and Properties of Shaft and Liner '            SHA195
      WRITE(6,2000) RAD,THICK,ES,NUS,ELS,NULS                                  SHA196
2000  FORMAT( //,                                                              SHA197
     + ' Radius of unlined hole....... =',F12.4/                               SHA198
     + ' Lining thickness............ =',F12.4//                              SHA199
     + ' Elastic modulus of medium.... =',E12.4/                               SHA200
     + ' Poissons ratio of medium..... =',E12.4//                              SHA201
     + ' Elastic modulus of liner..... =',E12.4/                               SHA202
     + ' Poissons ratio of liner...... =',E12.4)                               SHA203
C
C  SELECTION OF ANALYSIS OPTION. THIS CHOICE IS MADE REPEATEDLY
C  UNTIL THE SESSION IS COMPLETE
C
 75   WRITE(0,'(/)')                                                           SHA204
      WRITE(0,'(A/)') ' You can now examine hoop or shear stresses'            SHA205
      WRITE(0,'(A)') ' Enter H for hoop deformation calculations, '            SHA206
      WRITE(0,'(A)') ' S for out-of-plane shear calculations, '                SHA207
      WRITE(0,'(A\)') ' or T to terminate ....  '                              SHA208
      READ (0,'(A1)') ICH                                                      SHA209
      IF(ICH.EQ.'H'.OR.ICH.EQ.'h') GO TO 100                                   SHA210
      IF(ICH.EQ.'S'.OR.ICH.EQ.'s') GO TO 200                                   SHA211
C
C  NO MORE CASES. TERMINATE AFTER RECORDING TIME AND DATE
C
      CALL CLOCK(CTIME)                                                        SHA212
      WRITE(6,2002) CTIME                                                      SHA213
 2002 FORMAT(/,' Time:  ',A8)                                                  SHA214
      CALL DATED(CDATE)                                                        SHA215
      WRITE(6,2003)  CDATE                                                     SHA216
 2003 FORMAT(/,' Date:  ',A8)                                                  SHA217
      CLOSE(6)                                                                 SHA218
      STOP                                                                     SHA219
C
C  SECTION 2 - HOOP DEFORMATION CALCULATIONS
C
C  FIRST DEFINE THE STATE OF STRESS OR STRAIN
C
 100  WRITE(6,'(////)')                                                        SHA220
      WRITE(6,'(A)') ' HOOP AND AXIAL DEFORMATION CALCULATION '                SHA221
      WRITE(6,'(A)') '                                        '                SHA222
      WRITE(0,'(/)')                                                           SHA223
      WRITE(0,'(A\)')                                                          SHA224
     + ' Do you wish to enter boundary conditions as strains ? (y/n) '         SHA225
      READ (0,'(A1)') ICH                                                      SHA226
      IF(ICH.NE.'Y'.AND.ICH.NE.'y') THEN                                       SHA227
C
C  STRESSES ARE TO BE ENTERED
```

```
C
        FLAG = .TRUE.                                                   SHA228
        WRITE(0,'(A)')                                                  SHA229
        WRITE(0,'(A)') ' Enter stresses remote from the shaft '         SHA230
        WRITE(0,'(A\)') ' XX direct stress ? .... '                     SHA231
        READ(0,*) SX                                                    SHA232
        WRITE(0,'(A\)') ' YY direct stress ? .... '                     SHA233
        READ(0,*) SY                                                    SHA234
        WRITE(0,'(A\)') ' XY shear stress ?  .... '                     SHA235
        READ(0,*) SXY                                                   SHA236
        IF(STRAIN) THEN                                                 SHA237
                WRITE(0,'(A\)') ' Axial strain ?  .... '                SHA238
                READ(0,*) ESZ                                           SHA239
                ENDIF                                                   SHA240
      ELSE                                                              SHA241
C
C  ENTER STRAINS
C
        FLAG = .FALSE.                                                  SHA242
        WRITE(0,'(A)') ' Enter strains remote from the shaft '          SHA243
        WRITE(0,'(A\)') ' XX direct strain ? .... '                     SHA244
        READ(0,*) ESX                                                   SHA245
        WRITE(0,'(A\)') ' YY direct strain ? .... '                     SHA246
        READ(0,*) ESY                                                   SHA247
        WRITE(0,'(A\)') ' XY shear strain ?  .... '                     SHA248
        READ(0,*) ESXY                                                  SHA249
             IF(STRAIN) THEN                                            SHA250
                WRITE(0,'(A\)') ' Axial strain ?  .... '                SHA251
                READ(0,*) ESZ                                           SHA252
              ELSE                                                      SHA253
                ESZ = -LAM*(ESX+ESY)/(2.*G)                             SHA254
              ENDIF                                                     SHA255
C
C  OUTPUT STRAINS
C
C
       WRITE(0,2008)ESX,ESY,ESXY                                        SHA256
2008   FORMAT(' The input in-plane strains are :  '/                    SHA257
     .         '     esx = ',E12.4/                                     SHA258
     .         '     esy = ',E12.4/                                     SHA259
     .         '     esxy = ',E12.4/)                                   SHA260
C
C  COMPUTE CORRESPONDING STRESSES
C  Equations 2.1, 2.2 and 2.3
C
        SX = (2.*G+LAM)*ESX + LAM*(ESY+ESZ)                             SHA261
        SY = (2.*G+LAM)*ESY + LAM*(ESZ+ESX)                             SHA262
        SXY = G*ESXY                                                    SHA263
       ENDIF                                                            SHA264
C
C  OUTPUT STRESSES AND STRAINS
C
       WRITE(0,2007)SX,SY,SXY                                           SHA265
2007   FORMAT(' The input in-plane stresses are :  '/                   SHA266
     .         '     SX = ',E12.4/                                      SHA267
     .         '     SY = ',E12.4/                                      SHA268
     .         '     SXY = ',E12.4/)                                    SHA269
       WRITE(0,2006)ESZ                                                 SHA270
2006   FORMAT(' The axial strain (ESZ) is :  ',E12.4/)                  SHA271
C
       WRITE(6,'(/)')                                                   SHA272
       IF(FLAG) THEN                                                    SHA273
       WRITE(6,2007)SX,SY,SXY                                           SHA274
       ELSE                                                             SHA275
       WRITE(6,2008)ESX,ESY,ESXY                                        SHA276
       WRITE(6,2005)SX,SY,SXY                                           SHA277
2005   FORMAT(' The calculated in-plane stresses are :  '/              SHA278
     .         '     SX = ',E12.4/                                      SHA279
     .         '     SY = ',E12.4/                                      SHA280
     .         '     SXY = ',E12.4/)                                    SHA281
       ENDIF                                                            SHA282
       WRITE(6,2006)ESZ                                                 SHA283
C
C  CALCULATE PRINCIPAL STRESSES, AFTER CALCULATING THE MEAN AND
C  DEVIATOR STRESSES
C
       P = (SX+SY)/2.                                                   SHA284
       S = (SX-SY)/2.                                                   SHA285
       ALPHA = 0.0                                                      SHA286
C
C  IF THE THESE ARE ALREADY PRINCIPAL STRESSES SKIP THE FOLLOWING
```

```
C
      IF (SXY.NE.0.0) THEN                                              SHA287
          VALUE = SQRT(SXY*SXY + S*S)                                   SHA288
          SIG1 = P + VALUE                                              SHA289
          SIG3 = P - VALUE                                              SHA290
          ALPHA = 0.5 * ATAN2(SXY,S)                                    SHA291
          ALPHA = ALPHA * 57.296                                        SHA292
          S = (SIG1 - SIG3)/2.                                          SHA293
C
C  PRINT PRINCIPAL STRESSES
C
          WRITE(0,4001)SIG1,SIG3                                        SHA294
4001      FORMAT(/' The principal stresses are :'/                      SHA295
     .      '     SIG1 = ',E12.4/                                       SHA296
     .      '     SIG3 = ',E12.4/)                                      SHA297
          WRITE(0,4000)ALPHA                                            SHA298
4000      FORMAT(' The major stress is inclined at ',F5.1,              SHA299
     .     ' degrees relative to the X axis ')                          SHA300
C
          WRITE(6,4001)SIG1,SIG3                                        SHA301
          WRITE(6,4000)ALPHA                                            SHA302
      ENDIF                                                             SHA303
C
C    CALCULATE COEFFICIENTS FOR LINED TUNNEL
C
      IF (SLIP) THEN                                                    SHA304
              CALL COEFFS                                               SHA305
      ELSE                                                              SHA306
              CALL COEFF                                                SHA307
      ENDIF                                                             SHA308
C
C  SKIP THE NEXT CALCULATIONS IF AUTOMATIC SAMPLING WAS SELECTED
C
      IF(.NOT.AUTO) THEN                                                SHA309
         WRITE(0,'(/)')                                                 SHA310
      PAUSE ' Press ENTER to proceed with interaction analysis '        SHA311
      WRITE(0,'(/)')                                                    SHA312
      WRITE(0,'(A/)') ' The Interaction Calculation Predicts '           SHA313
      WRITE(6,'(/)')                                                    SHA314
      WRITE(6,'(A/)') ' The Interaction Calculation Predicts '           SHA315
      WRITE(0,999)                                                      SHA316
  999 FORMAT(/,'   Radius    Angle   RR-Stress   TT-Stress   RT-Stress',  SHA317
     1  '   ZZ-Stress' )                                                SHA318
C
C    LOOP ON THETA
C
      DO 150 J=1,NTHETA                                                 SHA319
              TH=THETAS(J)                                              SHA320
      WRITE(6,2009) TH                                                  SHA321
 2009 FORMAT(/,' Angle from XX stress direction = ',F6.1)               SHA322
      WRITE(6,2010)                                                     SHA323
 2010  FORMAT(/,' Radius   RR-Stress   TT-Stress   RT-Stress',          SHA324
     1  '   ZZ-Stress   Radial Displ.  Hoop Displ.')                    SHA325
C
C  FIRST ROTATE TO PRINCIPAL STRESS DIRECTION
C
      TH2=2.0*(TH-ALPHA)*0.0174532                                      SHA326
      COS2T=COS(TH2)                                                    SHA327
      SIN2T=SIN(TH2)                                                    SHA328
C
C    LOOP ON R
C
      DO 140 I=1,NRAD                                                   SHA329
      R=RADII(I)                                                        SHA330
      IF(R.GT.RAD) THEN                                                 SHA331
C
C    MEDIUM STRESSES AND DISPLACEMENTS
C
              CALL MEDIUM(R,COS2T,SIN2T,SR,ST,SRT,SZ,U,V)               SHA332
              ELSE                                                      SHA333
C
C    LINER STRESSES AND DISPLACEMENTS
C
              CALL LINER(R,COS2T,SIN2T,SR,ST,SRT,SZ,U,V)                SHA334
              ENDIF                                                     SHA335
C
C
      WRITE(0,'(2F9.2,4E12.4)') R,TH,SR,ST,SRT,SZ                       SHA336
      WRITE(6,2011) R,SR,ST,SRT,SZ,U,V                                  SHA337
 2011 FORMAT(F9.3,6E12.4)                                               SHA338
C
```

```
 140   CONTINUE                                                          SHA339
 150   CONTINUE                                                          SHA340
      WRITE(0,'(A)') ' Angles are relative to XX axis '                  SHA341
      ENDIF                                                              SHA342
      WRITE(0,'(/)')                                                     SHA343
     PAUSE ' Press ENTER for liner stresses from interaction analysis'   SHA344
       WRITE(0,'(/)')                                                    SHA345
       WRITE(0,'(A)') ' The Interaction Calculation for the liner '      SHA346
       WRITE(0,'(A)') ' predicts the stresses listed below. '            SHA347
       WRITE(0,'(A)') ' Note that the reference angle is the'            SHA348
       WRITE(0,'(A)') ' first principal stress direction '               SHA349
       WRITE(0,'(/)')                                                    SHA350
       WRITE(6,'(/)')                                                    SHA351
       WRITE(6,'(A)') ' The Interaction Calculation for the liner '      SHA352
       WRITE(6,'(A)') ' predicts the stresses listed below. '            SHA353
       WRITE(6,'(A)') ' Note that the reference angle is the'            SHA354
       WRITE(6,'(A)') ' first principal stress direction '               SHA355
       WRITE(6,'(/)')                                                    SHA356
C
C  GENERATE SAMPLES ALONG RADIAL LINES AT 0 AND 90 DEGREES
C
C
C    LOOP ON THETA
C
      DO 170 J=1,2                                                       SHA357
      TH=ATHETA(J)                                                       SHA358
      TH2=2.0*TH*0.0174532                                               SHA359
      COS2T=COS(TH2)                                                     SHA360
      SIN2T=SIN(TH2)                                                     SHA361
C
C    LOOP ON R
C
      DO 160 I=1,NUM                                                     SHA362
      R=ARADI(I)                                                         SHA363
C
C    LINER STRESSES AND DISPLACEMENTS
C
                CALL LINER(R,COS2T,SIN2T,SR,ST,SRT,SZ,U,V)               SHA364
                        SRAD(J,I)  = SR                                  SHA365
                        STHET(J,I) = ST                                  SHA366
                        SAXL(J,I)  = SZ                                  SHA367
                        UARRAY(J,I)= U                                   SHA368
                        VARRAY(J,I)= V                                   SHA369
  160 CONTINUE                                                           SHA370
  170 CONTINUE                                                           SHA371
C
C OUTPUT WITH SIMPLE GRAPHICS
C
        WRITE(0,'(/)')                                                   SHA372
        WRITE(0,'(A)') ' Hoop Stresses in the Liner '                    SHA373
        WRITE(0,2012)                                                    SHA374
        WRITE(6,'(/)')                                                   SHA375
        WRITE(6,'(A)') ' Hoop Stresses in the Liner '                    SHA376
        WRITE(6,2012)                                                    SHA377
2012    FORMAT(2X,6HRadius,4X,11HAt 0.(Pt 1),3X,12HAt 90.(Pt 2),         SHA378
     +  4X,7HMinimum,16X,7HMaximum)                                      SHA379
        CALL PLOTS(ARADI,STHET,NUM)                                      SHA380
        WRITE(0,'(/)')                                                   SHA381
        WRITE(0,'(A)') ' Radial Stresses in the Liner '                  SHA382
        WRITE(0,2012)                                                    SHA383
        WRITE(6,'(/)')                                                   SHA384
        WRITE(6,'(A)') ' Radial Stresses in the Liner '                  SHA385
        WRITE(6,2012)                                                    SHA386
        CALL PLOTS(ARADI,SRAD,NUM)                                       SHA387
        WRITE(0,'(/)')                                                   SHA388
        WRITE(0,'(A)') ' Axial Stresses in the Liner '                   SHA389
        WRITE(0,2012)                                                    SHA390
        WRITE(6,'(/)')                                                   SHA391
        WRITE(6,'(A)') ' Axial Stresses in the Liner '                   SHA392
        WRITE(6,2012)                                                    SHA393
        CALL PLOTS(ARADI,SAXL,NUM)                                       SHA394
        WRITE(0,'(/)')                                                   SHA395
        WRITE(0,'(A)') ' Radial Displacements in the Liner '             SHA396
        WRITE(0,2012)                                                    SHA397
        WRITE(6,'(/)')                                                   SHA398
        WRITE(6,'(A)') ' Radial Displacements in the Liner '             SHA399
        WRITE(6,2012)                                                    SHA400
        CALL PLOTS(ARADI,UARRAY,NUM)                                     SHA401
        WRITE(0,'(/)')                                                   SHA402
        WRITE(0,'(A)') ' Hoop Displacements in the Liner '               SHA403
        WRITE(0,2012)                                                    SHA404
```

```
        WRITE(6,'(/)')                                                  SHA405
        WRITE(6,'(A)') ' Hoop Displacements in the Liner '              SHA406
        WRITE(6,2012)                                                   SHA407
        CALL PLOTS(ARADI,VARRAY,NUM)                                    SHA408
        GO TO 75                                                        SHA409
C
C  SECTION 3 - CALCULATIONS FOR PURE SHEAR
C
 200  WRITE(6,'(////)')                                                 SHA410
      WRITE(6,'(A)') ' OUT-OF-PLANE SHEAR CALCULATION '                 SHA411
      WRITE(6,'(A)') ' ____________________________ '                   SHA412
      WRITE(0,'(/)')                                                    SHA413
      WRITE(0,'(A\)')                                                   SHA414
     + ' Do you wish to enter boundary conditions as strains ? (y/n) '  SHA415
      READ (0,'(A1)') ICH                                               SHA416
      IF(ICH.NE.'Y'.AND.ICH.NE.'y') THEN                                SHA417
C
C  STRESSES ARE TO BE ENTERED
C
        WRITE(0,'(/)')                                                  SHA418
        WRITE(0,'(A)') ' Enter stresses remote from the shaft '         SHA419
        WRITE(0,'(A\)') ' ZX shear stress ? .... '                      SHA420
        READ(0,*) SZX                                                   SHA421
        WRITE(0,'(A\)') ' ZY shear stress ? .... '                      SHA422
        READ(0,*) SZY                                                   SHA423
      ELSE                                                              SHA424
C
C  ENTER STRAINS
C
        WRITE(0,'(A)') ' Enter strains remote from the shaft '          SHA425
        WRITE(0,'(A\)') ' ZX shear strain ? .... '                      SHA426
        READ(0,*) ESZX                                                  SHA427
        WRITE(0,'(A\)') ' ZY shear strain ? .... '                      SHA428
        READ(0,*) ESZY                                                  SHA429
C
C  OUTPUT STRAINS
C
       WRITE(6,'(/)')                                                   SHA430
       WRITE(6,3000)ESZX,ESZY                                           SHA431
3000   FORMAT(' The input shear strains are :  '/                       SHA432
     .        '     eszx = ',F12.4/                                     SHA433
     .        '     eszy = ',E12.4/)                                    SHA434
C
C  COMPUTE CORRESPONDING STRESSES
C
        SZX = ESZX * G                                                  SHA435
        SZY = ESZY * G                                                  SHA436
       ENDIF                                                            SHA437
C
C  OUTPUT STRESSES
C
       WRITE(0,3001)SZX,SZY                                             SHA438
3001   FORMAT(' The input shear stresses are :  '/                      SHA439
     .        '     SZX = ',E12.4/                                      SHA440
     .        '     SZY = ',E12.4/)                                     SHA441
       WRITE(6,3001)SZX,SZY                                             SHA442
C
C  SKIP THE NEXT CALCULATIONS IF AUTOMATIC SAMPLING WAS SELECTED
C
      IF(.NOT.AUTO) THEN                                                SHA443
         WRITE(0,'(/)')                                                 SHA444
        PAUSE ' Press ENTER to proceed with interaction analysis '      SHA445
        WRITE(0,998)                                                    SHA446
  998 FORMAT(/,'   Radius    Angle    RZ-Stress    TZ-Stress ')        SHA447
C
C    LOOP ON THETA
C
        DO 250 J=1,NTHETA                                               SHA448
               TH=THETAS(J)                                             SHA449
      WRITE(6,2022) TH                                                  SHA450
 2022   FORMAT(/,' Angle from XX-stress direction = ',F6.1)             SHA451
        WRITE(6,2023)                                                   SHA452
 2023    FORMAT(/,' Radius   RZ-Stress   TZ-Stress   Axial Displ.')     SHA453
        THT=TH*0.0174532                                                SHA454
        COST=COS(THT)                                                   SHA455
        SINT=SIN(THT)                                                   SHA456
C
C    LOOP ON R
C
        DO 240 I=1,NRAD                                                 SHA457
        R=RADII(I)                                                      SHA458
```

```
        IF(R.GT.RAD) THEN                                                SHA459
C
C     MEDIUM STRESSES AND DISPLACEMENTS
C
                CALL SHMED(R,COST,SINT,SRZ,STZ,W,SLIP)                   SHA460
                ELSE                                                     SHA461
C
C     LINER STRESSES AND DISPLACEMENTS
C
                CALL SHLIN(R,COST,SINT,SRZ,STZ,W,SLIP)                   SHA462
                ENDIF                                                    SHA463
C
C
        WRITE(0,'(2F9.2,2E12.4)') R,TH,SRZ,STZ                           SHA464
        WRITE(6,2024) R,SRZ,STZ,W                                        SHA465
 2024   FORMAT(F9.3,3E12.4)                                              SHA466
C
  240   CONTINUE                                                         SHA467
  250   CONTINUE                                                         SHA468
       ENDIF                                                             SHA469
       WRITE(0,'(/)')                                                    SHA470
      PAUSE ' Press ENTER for liner stresses from interaction analysis'  SHA471
C
C  GENERATE SAMPLES ALONG RADIAL LINES AT 0 AND 90 DEGREES
C
C
C     LOOP ON THETA
C
      DO 270 J=1,2                                                       SHA472
      TH=ATHETA(J)                                                       SHA473
      THT=TH*0.0174532                                                   SHA474
      COST=COS(THT)                                                      SHA475
      SINT=SIN(THT)                                                      SHA476
C
C     LOOP ON R
C
      DO 260 I=1,NUM                                                     SHA477
      R=ARADI(I)                                                         SHA478
C
C     LINER STRESSES
C
                CALL SHLIN(R,COST,SINT,SRZ,STZ,W,SLIP)                   SHA479
                        SRZS(J,I) = SRZ                                  SHA480
                        STZS(J,I) = STZ                                  SHA481
                        WARRAY(J,I)=W                                    SHA482
 260  CONTINUE                                                           SHA483
 270  CONTINUE                                                           SHA484
C
C OUTPUT WITH SIMPLE GRAPHICS
C
        WRITE(0,'(/)')                                                   SHA485
        WRITE(0,'(A)') ' RZ-Shear Stresses across the Liner '            SHA486
        WRITE(0,2025)                                                    SHA487
        WRITE(6,'(/)')                                                   SHA488
        WRITE(6,'(A)') ' RZ-Shear Stresses across the Liner '            SHA489
        WRITE(6,2025)                                                    SHA490
2025    FORMAT(2X,6HRadius,4X,11HAt 0.(Pt 1),3X,12HAt 90.(Pt 2),         SHA491
     +  4X,7HMinimum,16X,7HMaximum)                                      SHA492
        CALL PLOTS(ARADI,SRZS,NUM)                                       SHA493
        WRITE(0,'(/)')                                                   SHA494
        WRITE(0,'(A)') ' TZ-Shear Stresses across the Liner '            SHA495
        WRITE(0,2025)                                                    SHA496
        WRITE(6,'(/)')                                                   SHA497
        WRITE(6,'(A)') ' TZ-Shear Stresses across the Liner '            SHA498
        WRITE(6,2025)                                                    SHA499
        CALL PLOTS(ARADI,STZS,NUM)                                       SHA500
        WRITE(0,'(/)')                                                   SHA501
        WRITE(0,'(A)') ' Axial Displacement of the Liner '               SHA502
        WRITE(0,2025)                                                    SHA503
        WRITE(6,'(/)')                                                   SHA504
        WRITE(6,'(A)') ' Axial Displacement of the Liner '               SHA505
        WRITE(6,2025)                                                    SHA506
        CALL PLOTS(ARADI,WARRAY,NUM)                                     SHA507
        GO TO 75                                                         SHA508
      END                                                                SHA509
C=====================================================================
C
C SUBROUTINE TO EVALUATE THE COEFFICIENTS FOR THE CASE
C OF NO SLIP BETWEEN MEDIUM AND LINER
C
      SUBROUTINE COEFF                                                   COE  1
```

```
      LOGICAL STRAIN                                                    COE   2
      REAL NU,NUS,NUL,NULS,LAM,LAML                                     COE   3
      COMMON /MAT/ RAD,THICK,E,NU,EL,NUL,A,C,D,AL,CL,DL,P,S,            COE   4
     + ES,ELS,NUS,NULS,STRAIN,ESZ,G,GL,SZX,SZY                          COE   5
      DIMENSION Y(4),Z(4,4)                                             COE   6
C
C      CALCULATE CONSTANTS
C
      RM=RAD/(RAD-THICK)                                                COE   7
      RM2=RM*RM                                                         COE   8
      RM4=RM2*RM2                                                       COE   9
      RM6=RM2*RM4                                                       COE  10
      ER=E/(EL*(1.0+NU))                                                COE  11
C
C     COEFFICIENTS FOR HYDROSTATIC COMPONENT
C
      ERR=(E/EL)*((1.0+NUL)+RM2*(1.0-NUL))                              COE  12
      DEN=ERR-(1.0+NU)*(1.0-RM2)                                        COE  13
      ETERM=0                                                           COE  14
C
C     ADD OUT OF PLANE STRAIN TERM
C
      IF(STRAIN) ETERM= E*ESZ*(NULS-NUS)                                COE  15
C
C     Equation 2.22 for plane stress; equation 2.31 for plane strain
C
      A=(P*((1.0-NU)*(RM2-1.0)-ERR)-(ETERM*(1.0-RM2)))/DEN              COE  16
C
C     Equation 2.23 for plane stress; equation 2.33 for plane strain
C
      AL=(-2.0*P-ETERM)/DEN                                             COE  17
C
C     SET UP MATRIX AND RHS FOR PURE SHEAR CASE
C
C     From equation 2.58
C
      Y(1)=S                                                            COE  18
      Y(2)=-S                                                           COE  19
      Y(3)=-3.0*S                                                       COE  20
      Y(4)=3.0*S                                                        COE  21
      Z(1,1)=1.0                                                        COE  22
      Z(1,2)=2.0                                                        COE  23
      Z(1,3)=RM4-1.0                                                    COE  24
      Z(1,4)=2.0*RM2-2.0                                                COE  25
      Z(2,1)=1.0                                                        COE  26
      Z(2,2)=1.0                                                        COE  27
      Z(2,3)=2.0*RM6-RM4-1.0                                            COE  28
      Z(2,4)=3.0*RM4-2.0*RM2-1.0                                        COE  29
      Z(3,1)=1.0                                                        COE  30
      Z(3,2)=6.0/(1.0+NU)                                               COE  31
      Z(3,3)=ER*(4.0*NUL*RM6-(3.0*RM4+1.0)*(1.0+NUL))                   COE  32
      Z(3,4)=6.0*ER*(NUL*RM4-(1.0+NUL)*RM2-1.0)                         COE  33
      Z(4,1)=1.0                                                        COE  34
      Z(4,2)=(3.0*NU-3.0)/(1.0+NU)                                      COE  35
      Z(4,3)=ER*((3.0*RM4-1.0)*(1.0+NUL)-(6.0+2.0*NUL)*RM6)             COE  36
      Z(4,4)=3.0*ER*(2.0*RM2*(1.0+NUL)+(1.0-NUL)-(3.0+NUL)*RM4)         COE  37
C
C     Solve for coefficients
C
      CALL LINSYS(Z,Y,4)                                                COE  38
      R2=RAD*RAD                                                        COE  39
      R4=R2*R2                                                          COE  40
      A=A*R2                                                            COE  41
      AL=AL*R2                                                          COE  42
      C=Y(1)*R4                                                         COE  43
      CL=Y(3)*R4                                                        COE  44
      D=Y(2)*R2                                                         COE  45
      DL=Y(4)*R2                                                        COE  46
      RETURN                                                            COE  47
      END                                                               COE  48
C*********************************************************************
C
C SUBROUTINE TO EVALUATE THE COEFFICIENTS FOR THE CASE
C WHEN THERE IS SLIP BETWEEN MEDIUM AND LINER
C
      SUBROUTINE COEFFS                                                 COE   1
      LOGICAL STRAIN                                                    COE   2
      REAL NU,NUS,NUL,NULS,LAM,LAML                                     COE   3
      COMMON /MAT/ RAD,THICK,E,NU,EL,NUL,A,C,D,AL,CL,DL,P,S,            COE   4
     + ES,ELS,NUS,NULS,STRAIN,ESZ,G,GL,SZX,SZY                          COE   5
      DIMENSION Y(4),Z(4,4)                                             COE   6
```

```
C
C       CALCULATE CONSTANTS
C
      RM=RAD/(RAD-THICK)                                                COE   7
      RM2=RM*RM                                                         COE   8
      RM4=RM2*RM2                                                       COE   9
      RM6=RM2*RM4                                                       COE  10
      ER=E/(EL*(1.0+NU))                                                COE  11
C
C     COEFFICIENTS FOR HYDROSTATIC COMPONENT
C
      ERR=(E/EL)*((1.0+NUL)+RM2*(1.0-NUL))                              COE  12
      DEN=ERR-(1.0+NU)*(1.0-RM2)                                        COE  13
      ETERM=0                                                           COE  14
C
C     ADD OUT OF PLANE STRAIN TERM
C
      IF(STRAIN) ETERM= E*ESZ*(NULS-NUS)                                COE  15
C
C     Equation 2.22 for plane stress; equation 2.31 for plane strain
C
      A=(P*((1.0-NU)*(RM2-1.0)-ERR)-(ETERM*(1.0-RM2)))/DEN              COE  16
C
C     Equation 2.23 for plane stress; equation 2.33 for plane strain
C
      AL=(-2.0*P-ETERM)/DEN                                             COE  17
C
C     SET UP MATRIX AND RHS FOR PURE SHEAR CASE
C
C     From equation 2.59
C
      Y(1)=S                                                            COE  18
      Y(2)=-S                                                           COE  19
      Y(3)=0.0                                                          COE  20
      Y(4)=-3.0*S                                                       COE  21
      Z(1,1)=1.0                                                        COE  22
      Z(1,2)=2.0                                                        COE  23
      Z(1,3)=RM4-1.0                                                    COE  24
      Z(1,4)=2.0*RM2-2.0                                                COE  25
      Z(2,1)=1.0                                                        COE  26
      Z(2,2)=1.0                                                        COE  27
      Z(3,3)=2.0*RM6-RM4-1.0                                            COE  28
      Z(3,4)=3.0*RM4-2.0*RM2-1.0                                        COE  29
      Z(4,1)=1.0                                                        COE  30
      Z(4,2)=6.0/(1.0+NU)                                               COE  31
      Z(4,3)=ER*(4.0*NUL*RM6-(3.0*RM4+1.0)*(1.0+NUL))                   COE  32
      Z(4,4)=6.0*ER*(NUL*RM4-(1.0+NUL)*RM2-1.0)                         COE  33
      Z(3,1)=0.0                                                        COE  34
      Z(3,2)=0.0                                                        COE  35
      Z(2,3)=0.0                                                        COE  36
      Z(2,4)=0.0                                                        COE  37
C
C     Solve for coefficients
C
      CALL LINSYS(Z,Y,4)                                                COE  38
      R2=RAD*RAD                                                        COE  39
      R4=R2*R2                                                          COE  40
      A=A*R2                                                            COE  41
      AL=AL*R2                                                          COE  42
      C=Y(1)*R4                                                         COE  43
      CL=Y(3)*R4                                                        COE  44
      D=Y(2)*R2                                                         COE  45
      DL=Y(4)*R2                                                        COE  46
      RETURN                                                            COE  47
      END                                                               COE  48
C*********************************************************************
C
C SUBROUTINE TO CALCULATE STRESSES AND DISPLACEMENTS AT
C THE SAMPLE POINT DEFINED BY R AND T (COS2T,SIN2T) IN
C THE LINER
C
      SUBROUTINE LINER(R,COS2T,SIN2T,SR,ST,SRT,SZ,U,V)                  LIN   1
      LOGICAL STRAIN                                                    LIN   2
      REAL NU,NUS,NUL,NULS,LAM,LAML                                     LIN   3
      COMMON /MAT/ RAD,THICK,E,NU,EL,NUL,A,C,D,AL,CL,DL,P,S,            LIN   4
     * ES,ELS,NUS,NULS,STRAIN,ESZ,G,GL,SZX,SZY                          LIN   5
C
C     STRESSES AND DISPLACEMENTS IN THE LINER
C
C CHECK THAT THERE IS A LINER
C
```

```
      IF(THICK.EQ.0.) THEN
                      SR = 0.
                      ST = 0.
                      SZ = 0.
                      SRT = 0.
                      U = 0.
                      V = 0.
                      RETURN
                      ENDIF
      RE=R/EL
      RNP=1.0+NUL
      RNM=1.0-NUL
      R2=R*R
      R4=R2*R2
      AR=RAD-THICK
      AR2=AR*AR
      Z2=R2/AR2
      Z4=Z2*Z2
      Z6=Z2*Z4
      AA=AL/R2
      CC=CL/R4
      DD=DL/R2
C
C     From equation 2.78
C
      SR=(CC*(Z4-1.0)+2.0*DD*(Z2-1.0))*COS2T-AA*(Z2-1.0)
C
C     From equation 2.79
C
      ST=(CC*(1.0-Z4+4.0*Z6)+2.0*DD*(3.0*Z4-Z2))*COS2T-AA*(Z2+1.0)
C
C     From equation 2.80
C
      SRT=(CC*(2.0*Z6-Z4-1.0)+DD*(3.0*Z4-2.0*Z2-1.0))*SIN2T
      IF(STRAIN) THEN
C
C     From equation 2.25
C
                 SZ=ELS*ESZ + NULS*(SR+ST)
                 ELSE
                 SZ=0.
                 ENDIF
C
C     From equations 2.50 and 2.20
C
      U=RE*((CC*((3.*Z4+1.0)*RNP-4.0*NUL*Z6)
     1     +6.0*DD*(1.0+RNP*Z2-NUL*Z4))*COS2T/3.0
     2     -AA*(RNP+RNM*Z2))
      IF(STRAIN) U=U-NULS*ESZ*R
C
C     From equation 2.51
C
      V=RE*(CC*((6.0+2.0*NUL)*Z6-(3.0*Z4-1.0)*RNP)
     1     +3.0*DD*((3.0+NUL)*Z4-RNM-2.0*RNP*Z2))*SIN2T/3.0
      RETURN
      END
C#######################################################################
C
C SUBROUTINE TO SOLVE A LINEAR SET OF SIMULTANEOUS EQUATIONS
C USING GAUSSIAN ELIMINATION
C
      SUBROUTINE LINSYS (DUM1,DUM2,M)
      DOUBLE PRECISION A(4,4),Y(4),X
      DIMENSION DUM1(4,4),DUM2(4)
      DO 10 I=1,M
      Y(I)=DUM2(I)
      DO 10 J=1,M
      A(I,J)=DUM1(I,J)
   10 CONTINUE
      M1 = M - 1
      DO 150  K = 1,M1
      KP = K + 1
      X = 0.
      DO 110  I = K,M
      IF (X-DABS(A(I,K))) 100, 110, 110
  100 X = DABS(A(I,K))
      L = I
  110 CONTINUE
      IF (X) 120,120,130
```

```
  120 L = 0                                                          LIN 19
      GO TO 190                                                      LIN 20
  130 DO 140  J = 1,M                                                LIN 21
      X = A(K,J)                                                     LIN 22
      A(K,J) = A(L,J)                                                LIN 23
  140 A(L,J) = X                                                     LIN 24
      X = Y(K)                                                       LIN 25
      Y(K) = Y(L)                                                    LIN 26
      Y(L) = X                                                       LIN 27
      DO 150  I = KP,M                                               LIN 28
      X = A(I,K) / A(K,K)                                            LIN 29
      Y(I) = Y(I) - Y(K)*X                                           LIN 30
      DO 150  J = KP,M                                               LIN 31
  150 A(I,J) = A(I,J) - A(K,J)*X                                     LIN 32
      IF(A(M,M)) 160,155,160                                         LIN 33
  155 L=0                                                            LIN 34
      GO TO 190                                                      LIN 35
  160 Y(M) = Y(M)/A(M,M)                                             LIN 36
      K = M                                                          LIN 37
      DO 180  I = 1,M1                                               LIN 38
      X = 0.                                                         LIN 39
      KP = K                                                         LIN 40
      K = K - 1                                                      LIN 41
      DO 170  J = KP,M                                               LIN 42
  170 X = X + A(K,J)*Y(J)                                            LIN 43
  180 Y(K) = (Y(K) - X) / A(K,K)                                     LIN 44
  190 CONTINUE                                                       LIN 45
      DO 200 I=1,M                                                   LIN 46
      DUM2(I)=Y(I)                                                   LIN 47
  200 CONTINUE                                                       LIN 48
      RETURN                                                         LIN 49
      END                                                            LIN 50
C#######################################################################
C
C SUBROUTINE TO CALCULATE STRESSES AND DISPLACEMENTS AT
C THE SAMPLE POINT DEFINED BY R AND T (COS2T,SIN2T) IN
C THE MEDIUM
C
      SUBROUTINE MEDIUM(R,COS2T,SIN2T,SR,ST,SRT,SZ,U,V)                MED  1
      LOGICAL STRAIN                                                   MED  2
      REAL NU,NUS,NUL,NULS,LAM,LAML                                    MED  3
      COMMON /MAT/ RAD,THICK,E,NU,EL,NUL,A,C,D,AL,CL,DL,P,S,           MED  4
     + ES,ELS,NUS,NULS,STRAIN,ESZ,G,GL,SZX,SZY                         MED  5
C
C    STRESSES AND DISPLACEMENTS IN THE MEDIUM
C
      RE=R/E                                                           MED  6
      RNP=1.0+NU                                                       MED  7
      RNM=1.0-NU                                                       MED  8
      R2=R*R                                                           MED  9
      R4=R2*R2                                                         MED 10
      AA=A/R2                                                          MED 11
      CC=C/R4                                                          MED 12
      DD=D/R2                                                          MED 13
C
C    From equations 2.40 and 2.13
C
      SR=(S-CC-2.0*DD)*COS2T+AA+P                                      MED 14
C
C    From equations 2.41 and 2.13
C
      ST=(-S+CC)*COS2T-AA+P                                            MED 15
C
C    From equation 2.42
C
      SRT=(-S-CC-DD)*SIN2T                                             MED 16
      IF(STRAIN) THEN                                                  MED 17
                 SZ=ES*ESZ + NUS*(SR+ST)                               MED 18
                 ELSE                                                  MED 19
                 SZ=0.0                                                MED 20
                 ENDIF                                                 MED 21
C
C    From equations 2.43 and 2.19
C
      U=RE*(((S+CC/3.0)*RNP+2.0*DD)*COS2T-(AA*RNP-P*RNM))              MED 22
      IF(STRAIN) U=U-NUS*ESZ*R                                         MED 23
C
C    From equation 2.44
C
      V=RE*((-S+CC/3.0)*RNP-DD*RNM)*SIN2T                              MED 24
      RETURN                                                           MED 25
```

```
      END                                                               MED 26
C#####################################################################
C
C SUBROUTINE DEVELOPS A SIMPLE "LINE PRINTER' GRAPHICAL
C OUTPUT, SHOWING THE DISTRIBUTION OF STRESS THROUGH
C THE LINER
C
      SUBROUTINE PLOTS(RADII,ARRAY,NUM)                                 PLO  1
       DIMENSION ARRAY(2,1),RADII(1)                                    PLO  2
       DIMENSION LINE(32)                                               PLO  3
       CHARACTER*1 ONE,TWO,BLNK,PLUS,LINE                               PLO  4
       DATA ONE,TWO,BLNK,PLUS,EDGE/1H1,1H2,1H ,1H+,1H!/                 PLO  5
       DATA NCOL/30/                                                    PLO  6
C
C  FIRST  FIND THE RANGE AND INCREMENT PER COLUMN
C
        VMIN = ARRAY(1,1)                                               PLO  7
        VMAX = ARRAY(1,1)                                               PLO  8
        DO 10 J=1,2                                                     PLO  9
        DO 10 I=1,NUM                                                   PLO 10
        AHAH = ARRAY(J,I)                                               PLO 11
        IF (AHAH.LT.VMIN) VMIN = AHAH                                   PLO 12
        IF (AHAH.GT.VMAX) VMAX = AHAH                                   PLO 13
10      CONTINUE                                                        PLO 14
        RANGE = VMAX - VMIN                                             PLO 15
        VINC = RANGE/FLOAT(NCOL-1)                                      PLO 16
        WRITE(0,'(40X,E12.4,8X,E12.4)') VMIN,VMAX                       PLO 17
        WRITE(6,'(40X,E12.4,8X,E12.4)') VMIN,VMAX                       PLO 18
C
C  SET PRINTED LINE TO BLANKS AND ADD RIGHT HAND SIDE
C
        NCOL1 = NCOL+1                                                  PLO 19
        DO 20 I =1,NCOL1                                                PLO 20
20      LINE(I) = BLNK                                                  PLO 21
C
C  DO ONE LINE AT THE TIME
C
        DO 30 I=1,NUM                                                   PLO 22
                VAL1 = ARRAY(1,I)                                       PLO 23
                VAL2 = ARRAY(2,I)                                       PLO 24
        IF(RANGE.EQ.0.0) THEN                                           PLO 25
                LOC1 = NCOL/2                                           PLO 26
                LOC2 = NCOL/2                                           PLO 27
                        ELSE                                            PLO 28
                LOC1 = INT((VAL1-VMIN)/VINC)+1                          PLO 29
                LOC2 = INT((VAL2-VMIN)/VINC)+1                          PLO 30
                        ENDIF                                           PLO 31
        LINE(LOC1) = ONE                                                PLO 32
        LINE(LOC2) = TWO                                                PLO 33
        IF(LOC1.EQ.LOC2) LINE(LOC1) = PLUS                              PLO 34
        WRITE(0,1000) RADII(I),VAL1,VAL2,EDGE,(LINE(J),J=1,NCOL1),EDGE  PLO 35
        WRITE(6,1000) RADII(I),VAL1,VAL2,EDGE,(LINE(J),J=1,NCOL1),EDGE  PLO 36
1000    FORMAT(F7.2,3X,E12.4,2X,E12.4,5X,50A1)                          PLO 37
        LINE(LOC1) = BLNK                                               PLO 38
        LINE(LOC2) = BLNK                                               PLO 39
30      CONTINUE                                                        PLO 40
        WRITE(0,'(/)')                                                  PLO 41
        PAUSE ' Press ENTER to continue '                               PLO 42
        RETURN                                                          PLO 43
        END                                                             PLO 44
C#####################################################################
C
C SUBROUTINE CALULATES THE STRESS INDUCED IN THE LINER
C BY PURE SHEAR IN THE MEDIUM
C
      SUBROUTINE SHLIN(R,COST,SINT,SRZL,STZL,WL,SLIP)                   SHL  1
      LOGICAL STRAIN,SLIP                                               SHL  2
      REAL IL,KL,M2                                                     SHL  3
      COMMON /MAT/ RAD,THICK,E,NU,EL,NUL,A,C,D,AL,CL,DL,P,S,            SHL  4
     + ES,ELS,NUS,NULS,STRAIN,ESZ,G,GL,SZX,SZY                          SHL  5
C
C  CALCULATE SHEAR STRESS IN LINER RESULTING FROM PURE SHEAR
C
        RADI = RAD - THICK                                              SHL  6
        R2 = RAD*RAD                                                    SHL  7
        M2 = RADI*RADI/R2                                               SHL  8
        IF(SLIP) THEN                                                   SHL  9
                WL = 0.                                                 SHL 10
                SRZL = 0.                                               SHL 11
                STZL = 0.                                               SHL 12
                ELSE                                                    SHL 13
```

```
                 V1 = GL*(1.0-M2)                                        SHL 14
                 V2 =  G*(1.0+M2)                                        SHL 15
C
C     From equation 2.117
C
                 IL = 2.0*SZX/(V1+V2)                                    SHL 16
C
C     From equation 2.119
C
                 KL = 2.0*SZY/(V1+V2)                                    SHL 17
                 SM2 = RADI*RADI/(R*R)                                   SHL 18
C
C     From equation 2.107
C
                 WL = IL*R*(1.0+SM2)*COST + KL*R*(1.0+SM2)*SINT          SHL 19
C
C     From equation 2.108
C
                 SRZL =  GL*IL*(1.0-SM2)*COST + GL*KL*(1.0-SM2)*SINT     SHL 20
C
C     From equation 2.109
C
                 STZL = -GL*IL*(1.0+SM2)*SINT + GL*KL*(1.0+SM2)*COST     SHL 21
                 ENDIF                                                   SHL 22
      RETURN                                                             SHL 23
      END                                                                SHL 24
C######################################################################
C
C SUBROUTINE CALCULATES THE STRESSES IN THE MEDIUM THAT ARE
C CAUSED BY THE SPECIFIED PURE SHEAR IN THE FAR FIELD
C
      SUBROUTINE SHMED(R,COST,SINT,SRZ,STZ,W,SLIP)                       SHM  1
      LOGICAL STRAIN,SLIP                                                SHM  2
      REAL JM,LM,M2,JMR,LMR                                              SHM  3
      COMMON /MAT/ RAD,THICK,E,NU,EL,NUL,A,C,D,AL,CL,DL,P,S,             SHM  4
     + ES,ELS,NUS,NULS,STRAIN,ESZ,G,GL,SZX,SZY                           SHM  5
C
C  CALCULATE SHEAR STRESS IN MEDIUM RESULTING FROM PURE SHEAR
C
        RADI = RAD - THICK                                               SHM  6
        R2 = RAD*RAD                                                     SHM  7
        M2 = RADI*RADI/R2                                                SHM  8
        V1 = GL*(1.0-M2)                                                 SHM  9
        V2 =  G*(1.0+M2)                                                 SHM 10
        IF (SLIP) THEN                                                   SHM 11
C
C     From equation 2.121
C
                 JM = R2*SZX/G                                           SHM 12
                 LM = R2*SZY/G                                           SHM 13
                 ELSE                                                    SHM 14
                 VAL = R2*(V2-V1)/((V2+V1)*G)                            SHM 15
                 JM = SZX*VAL                                            SHM 16
                 LM = SZY*VAL                                            SHM 17
                 ENDIF                                                   SHM 18
C
C     From equation 2.118
C
        JMR = JM/(R*R)                                                   SHM 19
C
C     From equation 2.120
C
        LMR = LM/(R*R)                                                   SHM 20
        SZXG = SZX/G                                                     SHM 21
        SZYG = SZY/G                                                     SHM 22
C
C     From equation 2.110
C
        W = R*((SZXG+JMR)*COST +  (SZYG+LMR)*SINT)                       SHM 23
C
C     From equation 2.111
C
        SRZ = G*((SZXG-JMR)*COST +  (SZYG-LMR)*SINT)                     SHM 24
C
C     From equation 2.112
C
        STZ = -G*((SZXG+JMR)*SINT +  (SZYG+LMR)*COST)                    SHM 25
        RETURN                                                           SHM 26
        END                                                              SHM 27
C!!!!!!!!!!!!!!!!!!!!!!!!!!!!!!!!!!!!!!!!!!!!!!!!!!!!!!!!!!!!!
C       Note system dependence in the call to GETDAT       !
```

```
C       and  GETTIM. These are built in functions with     !
C       Ryan MacFarland Fortran and Microsoft Fortran      !
C       77 Version 4.1                                     !
C!!!!!!!!!!!!!!!!!!!!!!!!!!!!!!!!!!!!!!!!!!!!!!!!!!!!!!!!!!!!
C
      SUBROUTINE DATED(CDATE)                                           DAT   1
      CHARACTER*8 CDATE                                                 DAT   2
      INTEGER*4 IY,IM,ID                                                DAT   3
      CALL GETDAT(IY,IM,ID)                                             DAT   4
      IY=IY-1900                                                        DAT   5
      WRITE(CDATE,1000) IM,ID,IY                                        DAT   6
 1000 FORMAT(I2,1H/,I2,1H/,I2)                                          DAT   7
      RETURN                                                            DAT   8
      END                                                               DAT   9
C
C
      SUBROUTINE CLOCK(CTIME)                                           CLO   1
      CHARACTER*8 CTIME                                                 CLO   2
      INTEGER*2 IH,IM,IS,IF                                             CLO   3
      CALL GETTIM(IH,IM,IS,IF)                                          CLO   4
      WRITE(CTIME,1000) IH,IM,IS                                        CLO   5
 1000 FORMAT(I2,1H:,I2,1H:,I2)                                          CLO   6
      RETURN                                                            CLO   7
      END                                                               CLO   8
```

APPENDIX D

RIB AND SEPDB APPENDIX

Information from the Reference Information Base Used in this Report

This report contains no information from the Reference Information Base.

DISTRIBUTION LIST

1 J. W. Bartlett, Director (RW-1)
Office of Civilian Radioactive
Waste Management
U.S. Department of Energy
1000 Independence Avenue, S.W.
Washington, D.C. 20585

1 F. G. Peters, Deputy Director (RW-2)
Office of Civilian Radioactive
Waste Management
U.S. Department of Energy
1000 Independence Avenue, S.W.
Washington, D.C. 20585

1 T. H. Isaacs (RW-4)
Office of Strategic Planning
and International Programs
Office of Civilian Radioactive
Waste Management
U.S. Department of Energy
1000 Independence Avenue, S.W.
Washington, D.C. 20585

1 J. D. Saltzman (RW-5)
Office of External Relations
Office of Civilian Radioactive
Waste Management
U.S. Department of Energy
1000 Independence Avenue, S.W.
Washington, D.C. 20585

1 Samuel Rousso (RW-10)
Office of Program and Resources
Management
Office of Civilian Radioactive
Waste Management
U.S. Department of Energy
1000 Independence Avenue, S.W.
Washington, D.C. 20585

1 J. C. Bresee (RW-10)
Office of Civilian Radioactive
Waste Management
U.S. Department of Energy
1000 Independence Avenue, S.W.
Washington, D.C. 20585

1 C. P. Gertz (RW-20)
Office of Geologic Disposal
Office of Civilian Radioactive
Waste Management
U.S. Department of Energy
1000 Independence Avenue, S.W.
Washington, D.C. 20585

1 S. J. Brocoum (RW-22)
Analysis and Verification Division
Office of Civilian Radioactive
Waste Management
U.S. Department of Energy
1000 Independence Avenue, S.W.
Washington, D.C. 20585

1 D. D. Shelor (RW-30)
Office of Systems and Compliance
Office of Civilian Radioactive
Waste Management
U.S. Department of Energy
1000 Independence Avenue, S.W.
Washington, D.C. 20585

1 J. Roberts (RW-33)
Office of Civilian Radioactive
Waste Management
U.S. Department of Energy
1000 Independence Avenue, S.W.
Washington, D.C. 20585

1 G. J. Parker (RW-332)
Office of Civilian Radioactive
Waste Management
U.S. Department of Energy
1000 Independence Avenue, S.W.
Washington, D.C. 20585

1 Associate Director (RW-40)
Office of Storage and Transportation
Office of Civilian Radioactive
Waste Management
U.S. Department of Energy
1000 Independence Avenue, S.W.
Washington, D.C. 20585

1 Associate Director (RW-50)
Office of Contract Business
Management
Office of Civilian Radioactive
Waste Management
U.S. Department of Energy
1000 Independence Avenue, S.W.
Washington, D.C. 20585

1 C. G. Russomanno (RW-52)
Office of Civilian Radioactive
Waste Management
U.S. Department of Energy
1000 Independence Avenue, S.W.
Washington, D.C. 20585

1 D. U. Deere, Chairman
Nuclear Waste Technical
Review Board
1100 Wilson Blvd. #910
Arlington, VA 22209-2297

1 Dr. Clarence R. Allen
Nuclear Waste Technical Review Board
1000 E. California Blvd.
Pasadena, CA 91106

1 Dr. John E. Cantlon
Nuclear Waste Technical Review Board
1795 Bramble Dr.
East Lansing, MI 48823

1 Dr. Melvin W. Carter
Nuclear Waste Technical Review Board
4621 Ellisbury Dr., N.E.
Atlanta, GA 30332

1 Dr. Donald Langmuir
Nuclear Waste Technical Review Board
109 So. Lookout Mountain Cr.
Golden, CO 80401

1 Dr. D. Warner North
Nuclear Waste Technical Review Board
Decision Focus, Inc.
4984 El Camino Real
Los Altos, CA 94062

1 Dr. Dennis L. Price
Nuclear Wast Technical Review Board
1011 Evergreen Way
Blacksburg, VA 24060

1 Dr. Ellis D. Verink
Nuclear Waste Technical Review Board
4401 N.W. 18th Place
Gainesville, FL 32605

5 C. P. Gertz, Project Manager
Yucca Mountain Project Office
U.S. Department of Energy
P.O. Box 98608--MS 523
Las Vegas, NV 89193-8608

1 C. L. West, Director
Office of External Affairs
DOE Field Office, Nevada
U.S. Department of Energy
P.O. Box 98518
Las Vegas, NV 89193-85180

12 Technical Information Officer
DOE Field Office, Nevada
U.S. Department of Energy
P.O. Box 98518
Las Vegas, NV 89193-8518

1 P. K. Fitzsimmons, Director
Health Physics & Environmental
Division
DOE Field Office, Nevada
U.S. Department of Energy
P.O. Box 98518
Las Vegas, NV 89193-8518

1 D. R. Elle, Director
Environmental Protection Division
DOE Field Office, Nevada
U.S. Department of Energy
P.O. Box 98518
Las Vegas, Nv 89193-8518

1 Repository Licensing & Quality
Assurance Project Directorate
Division of Waste Management
U.S. Nuclear Regulatory Commission
Washington, D.C. 20555

1 Senior Project Manager for Yucca
Mountain Repository Project Branch
Division of Waste Management
U.S. Nuclear Regulatory Commission
Washington, D.C. 20555

1 NRC Document Control Desk
Division of Waste Management
U.S. Nuclear Regulatory Commission
Washington, D.C. 20555

1 P. T. Prestholt
NRC Site Representative
301 E. Stewart Ave.
Las Vegas, NV 89101

1 E. P. Binnall
Field Systems Group Leader
Building 50B/4235
Lawrence Berkeley Laboratory
Berkeley, CA 94720

1 Center for Nuclear Waste
Regulatory Analyses
6220 Culebra Road
Drawer 28510
San Antonio, TX 78284

3 L. J. Jardine
Technical Project Officer for YMP
Mail Stop L-204
Lawrence Livermore National
Laboratory
P.O. Box 808
Livermore, CA 94550

4 R. J. Herbst
Technical Project Officer for YMP
N-5, Mail Stop J521
Los Alamos National Laboratory
P.O. Box 1663
Los Alamos, NM 87545

1 H. N. Kalia
Exploratory Shaft Test Manager
Los Alamos National Laboratory
Mail Stop 527
101 Convention Center Dr.
Suite 820
Las Vegas, NV 89109

1 J. F. Divine
Assistant Director for
Engineering Geology
U.S. Geological Survey
106 National Center
12201 Sunrise Valley Dr.
Reston, VA 22092

6 L. R. Hayes
Technical Project Officer
Yucca Mountain Project Branch--MS 425
U.S. Geological Survey
P.O. Box 25046
Denver, CO 80225

1 V. R. Schneider
Asst. Chief Hydrologist--MS 414
Office of Program Coordination
& Technical Support
U.S. Geological Survey
12201 Sunrise Valley Drive
Reston, VA 22092

1 R. B. Raup, Jr.
Geological Division Coordinator
MS 913
Yucca Mountain Project
U.S. Geological Survey
P.O. Box 25046
Denver, CO 80225

1 D. H. Appel, Chief
Hydrologic Investigations Program
MS 421
U.S. Geological Survey
P.O. Box 25046
Denver, CO 80225

1 E. J. Helley
Branch of Western Regional Geology
MS 427
U.S. Geological Survey
345 Middlefield Road
Menlo Park, CA 94025

1 Chief
Nevada Operations Office
U.S. Geological Survey
101 Convention Center Drive
Suite 860, MS 509
Las Vegas, NV 89109

1 D. Zesiger
U.S. Geological Survey
101 Convention Center Dr.
Suite 860 - MS509
Las Vegas, NV 89109

1 R. V. Watkins, Chief
Project Planning and Management
U.S. Geological Survey
P.O. Box 25046
421 Federal Center
Denver, CO 80225

1 A. L. Flint
U.S. Geological Survey
MS 721
P.O. Box 327
Mercury, NV 89023

1 D. A. Beck
U.S. Geological Survey
1500 E. Tropicana, Suite 201
Las Vegas, NV 89119

1 P. A. Glancy
U.S. Geological Survey
Federal Building, Room 224
Carson City, NV 89701

1 Sherman S. C. Wu
Branch of Astrogeology
U.S. Geological Survey
2255 N. Gemini Dr.
Flagstaff, AZ 86001

1 J. H. Sass
Branch of Tectonophysics
U.S. Geological Survey
2255 N. Gemini Dr.
Flagstaff, AZ 86001

1 DeWayne A. Campbell
Technical Project Officer for YMP
Bureau of Reclamation
Code D-3790
P.O. Box 25007
Denver, CO 80225

1 S. M. Dash
Science Applications International Corp.
14062 Denver West Parkway, Suite 255
Golden, CO 80401

1 K. W. Causseaux
NHP Reports Chief
U.S. Geological Survey
421 Federal Center
P.O. Box 25046
Denver, CO 80225

1 V. M. Glanzman
U.S. Geological Survey
913 Federal Center
P.O. Box 25046
Denver, CO 80225

1 J. H. Nelson
Technical Project Officer for YMP
Science Applications International Corp.
101 Convention Center Dr.
Suite 407
Las Vegas, NV 89109

2 SAIC-T&MSS Library
Science Applications International Corp.
101 Convention Center Dr.
Suite 407
Las Vegas, NV 89109

1 Elaine Ezra
YMP GIS Project Manager
EG&G Energy Measurements, Inc.
Mail Stop D-12
P.O. Box 1912
Las Vegas, NV 89125

1 R. E. Jackson, Program Manager
Roy F. Weston, Inc.
955 L'Enfant Plaza, Southwest
Washington, D.C. 20024

1 Technical Information Center
Roy F. Weston, Inc.
955 L'Enfant Plaza, Southwest
Washington, D.C. 20024

1 D. Hedges, Vice President,
Quality Assurance
Roy F. Weston, Inc.
4425 Spring Mountain Road, Suite 300
Las Vegas, Nevada 89102

1 D. L. Fraser, General Manager
Reynolds Electrical & Engineering Co.
Mail Stop 555
P.O. Box 98521
Las Vegas, NV 89193-8521

1 R. F. Pritchett
Technical Project Officer for YMP
Reynolds Electrical & Engineering Co.
MS 408
P.O. Box 98521
Las Vegas, NV 89193-8521

1 B. W. Colston
General Manager & President
Las Vegas Branch
Raytheon Services Nevada
Mail Stop 416
P.O. Box 95487
Las Vegas, NV 89193-5487

1 R. L. Bullock
Technical Project Officer for YMP
Raytheon Services Nevada
Suite P250, MS 403
101 Convention Center Dr.
Las Vegas, NV 89109

1 R. E. Lowder
Technical Project Officer for YMP
MAC Technical Services
101 Convention Center Drive
Suite 1100
Las Vegas, NV 89109

1 C. K. Hastings, Manager
PASS Program
Pacific Northwest Laboratories
P.O. Box 999
Richland, WA 99352

1 A. T. Tamura
Science and Technology Division
Office of Scientific and Technical Information
U.S. Department of Energy
P.O. Box 62
Oak Ridge, TN 37831

1 Carlos G. Bell, Jr.
Professor of Civil Engineering
Civil and Mechanical Engineering Department
University of Nevada, Las Vegas
4505 South Maryland Parkway
Las Vegas, NV 89154

1 C. F. Costa, Director
Nuclear Radiation Assessment Division
U.S. Environmental Protection Agency
Environmental Monitoring Systems Laboratory
P.O. Box 93478
Las Vegas, NV 89193-3478

1 ONWI Library
Battelle Columbus Laboratory
Office of Nuclear Waste Isolation
505 King Avenue
Columbus, OH 43201

1 T. Hay, Executive Assistant
Office of the Governor
State of Nevada
Capitol Complex
Carson City, NV 89710

3 R. R. Loux, Jr.
Executive Director
Nuclear Waste Project Office
State of Nevada
Evergreen Center, Suite 252
1802 North Carson Street
Carson City, NV 89710

1 C. H. Johnson
Technical Program Manager
Nuclear Waste Project Office
State of Nevada
Evergreen Center, Suite 252
1802 North Carson Street
Carson City, NV 89710

1 John Fordham
Water Resources Center
Desert Research Institute
P.O. Box 60220
Reno, NV 89506

1 Dr. Martin Mifflin
Water Resources Center
Desert Research Institute
2505 Chandler Avenue
Suite 1
Las Vegas, NV 89120

1 Eric Anderson
Mountain West Research-Southwest Inc.
2901 N. Central Ave. #1000
Phoenix, AZ 85012-2730

1 Department of Comprehensive Planning
Clark County
225 Bridger Avenue, 7th Floor
Las Vegas, NV 89155

1 Planning Department
Nye County
P.O. Box 153
Tonopah, NV 89049

1 Lincoln County Commission
Lincoln County
P.O. Box 90
Pioche, NV 89043

5 Judy Foremaster
City of Caliente
P.O. Box 158
Caliente, NV 89008

1 Economic Development Department
City of Las Vegas
400 East Stewart Avenue
Las Vegas, NV 89101

1 Community Planning & Development
City of North Las Vegas
P.O. Box 4086
North Las Vegas, NV 89030

1 Director of Community Planning
City of Boulder City
P.O. Box 367
Boulder City, NV 89005

1 Commission of the European
Communities
200 Rue de la Loi
B-1049 Brussels
BELGIUM

2 M. J. Dorsey, Librarian
YMP Research and Study Center
Reynolds Electrical & Engineering
Co., Inc.
MS 407
P.O. Box 98521
Las Vegas, NV 89193-8521

1 Amy Anderson
Argonne National Laboratory
Building 362
9700 So. Cass Ave.
Argonne, IL 60439

10 M. P. Hardy
J.F.T. Agapito & Assoc.
715 Horizon Dr., Suite 340
Grand Junction, CO 81506

1	6300	T. O. Hunter
1	6310	T. E. Blejwas, Actg.
1	6310A	L. E. Shephard
1	6312	F. W. Bingham
1	6313	L. S. Costin
1	6313	S. J. Bauer
1	6315	F. B. Nimick, Actg.
1	6316	R. P. Sandoval
2	6318	R. J. Macer for 100/124231/SAND88-7065/QA
1	6319	R. R. Richards
5	3141	S. A. Landenberger
8	3145	Document Processing for DOE/OSTI
3	3151	G. C. Claycomb
20	6341	WMT Library
1	6410	D. J. McCloskey, Actg.
1	8523-2	Central Technical Files

The number in the lower right-hand corner is an accession number used for Office of Civilian Radioactive Waste Management purposes only. It should not be used when ordering this publication.

NNA.911118.0082

END

DATE FILMED

2/05/92