SAND2016-0541D

Exceptional service in the national interest

Sandia National Laboratories

4-axis, Multi-Material Extruding, Direct Write Additive Manufacturing Tool

Michaela R. Fasano, Texas A&M University, M.S. Mechanical Engineering, May 2017
Shawn M. Dirk, Seethambal S. Mani, 2735
Sandia National Laboratories/NM, U.S. Department of Energy
July 30, 2015

Abstract

The present work comprises the design, assembly, programming and operation of an additive manufacturing (AM) system. This system is a flexible, customizable, direct write (DW), three-dimensional printing tool capable of polymer, metal and ceramic extrusion printing. Consisting of four, bidirectional axes that are operated and controlled using CNC G-code software via four brushless servo motors, this system provides precise, powerful coordinated motion with accurate positioning. The open-architecture design of this tool and its software allows for implementation of an open-source slicing routine, developed primarily for polymer extrusion, which can be adapted to allow various other types of materials to be deposited on a single platform. Additionally, the software allows users to develop a variety of controlled processes per the required conditions. Some of the printing this tool will perform includes the extrusion of ceramic slurries on thermoplastics as well as highly-loaded thermoplastics with metal or ceramic particles. The development of such a system allows for further exploration into the world of AM that is otherwise not possible with traditional machining.

Objective

To assemble and program a flexible, customizable, direct write, 3D printing tool capable of polymer, metal and ceramic printing. The development of this system provides a capability within Org. 2735 that allows for the development of new business opportunities around AM, both internal and external to SNL, as the strengths and weaknesses of this field are further studied.

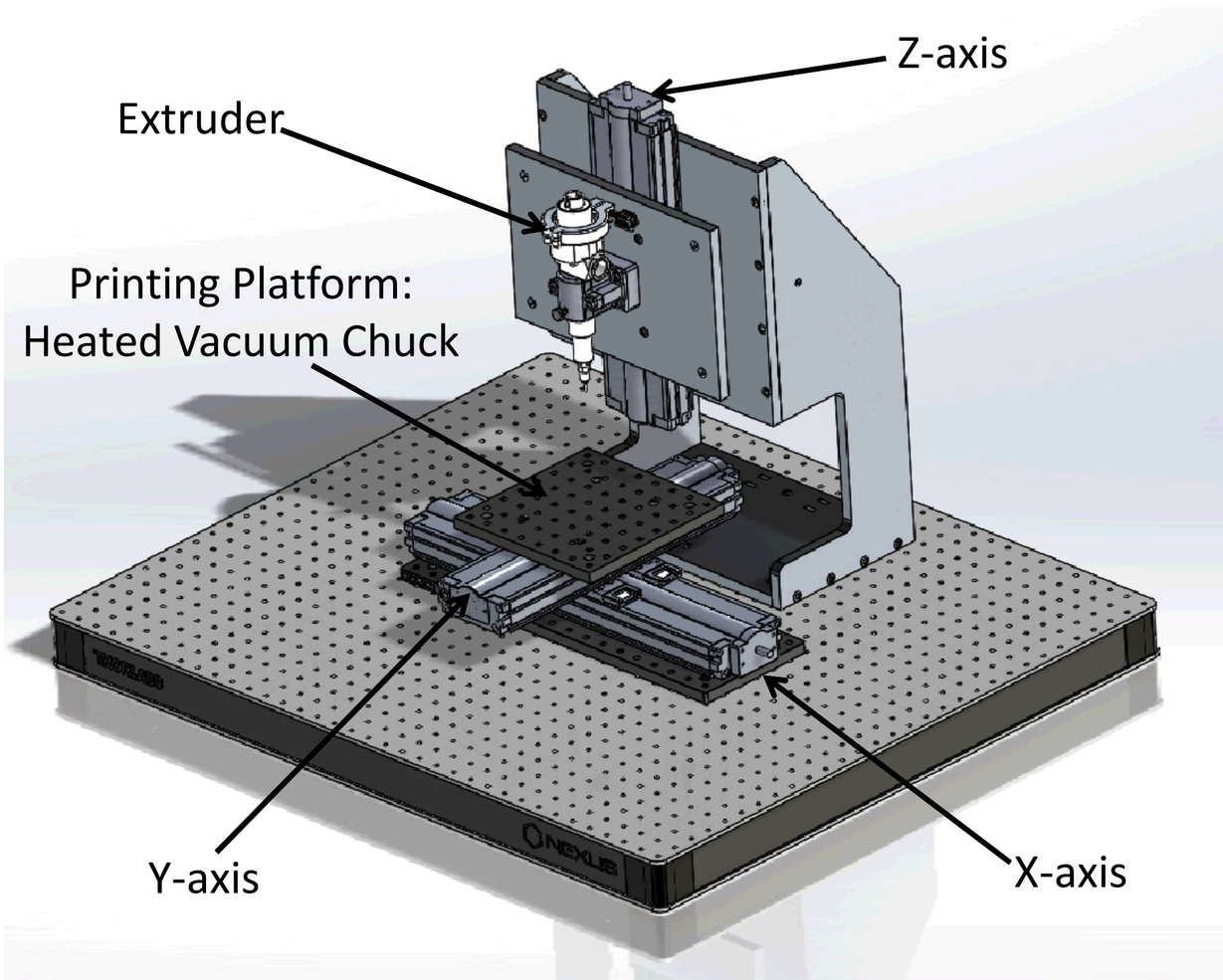

Background

Additive manufacturing (AM) refers to the process by which digital 3D model data is translated to build up a component in layers by depositing material. This method of printing is a professional production technique that is clearly distinguished from conventional methods of material removal, or subtractive manufacturing. There are various methods of AM, but the most common include: fused deposition modeling (FDM), stereolithography (SLA), and laser sintering/melting (SLS/SLM). There is also a wide variety of materials utilized in AM: metals (CoCr, Au, Ag, 6061-T6, Ti6Al4V), ceramics (alumina, cermet), and plastics (nylon, thermoplastics, ABS, PEEK, SLA epoxies).

Results

- Component selection involved capability of altering certain part aspects to meet required project specifications.
- Individual components were tested and configured prior to system assembly to ensure functionality.
- Printing involves use of various computer programs to ultimately generate G-code to run FlashCut CNC Software.
- Awaiting delivery of extruder and heated vacuum chuck to complete system assembly.

Conclusions

- AM Tool is capable of extruding ceramics, metals and polymers of varying viscosities.
- User-friendly operating system allows for multiple users with little training necessary.
- High precision and accuracy of electromechanical positioning system (driven by servo motors), printing surface stability and temperature control via vacuum chuck, and controlled extrusion of high-viscosity materials allows for high quality printing.

U.S. DEPARTMENT OF ENERGY
NNSA National Nuclear Security Administration
Sandia National Laboratories is a multi-program laboratory managed and operated by Sandia Corporation, a wholly owned subsidiary of Lockheed Martin Corporation, for the U.S. Department of Energy's National Nuclear Security Administration under contract DE-AC04-94AL85000.
SAND No. 2011-XXXXP

Exceptional service in the national interest

Sandia National Laboratories

Printed Electronic Embedded Strain Sensors

Michaela R. Fasano, Texas A&M University, M.S. Mechanical Engineering, May 2017

Shawn M. Dirk, Seethambal S. Mani, 2735

Sandia National Laboratories/NM, U.S. Department of Energy

July 30, 2015

Abstract

The present work comprises the study of printing direct write electronic strain sensors using silver nanoparticle ink onto various substrates including polymer coated glass and thermoplastic layered aluminum sheeting. This research entails material compatibility studies to identify and characterize insulator/conductor combinations that produce viable structures composed of metal conductors on low-temperature substrates. A polyacrylic finish was used to form an insulating layer on a glass slide, upon which a silver nanoparticle ink was then applied. Ink was also printed on a modified polymer surface (polyethylene terephthalate, PET), which was directly attached to aluminum sheeting. Lines of ink (in a serpentine pattern) and contact pads were printed using an aerosol jet printing system and then sintered to form the sensors. Electrical measurements of the samples showed conductive traces; resistance measurements were also recorded as a function of time using a data acquisition system. Repeated thermal cycling of printed structure resulted in cracking precluding fabrication of strain gauge.

Objective

To study the capabilities of printed embedded sensors on structural components for state-of-health monitoring and active tamper detection purposes.

Specifications

Microjet Configuration

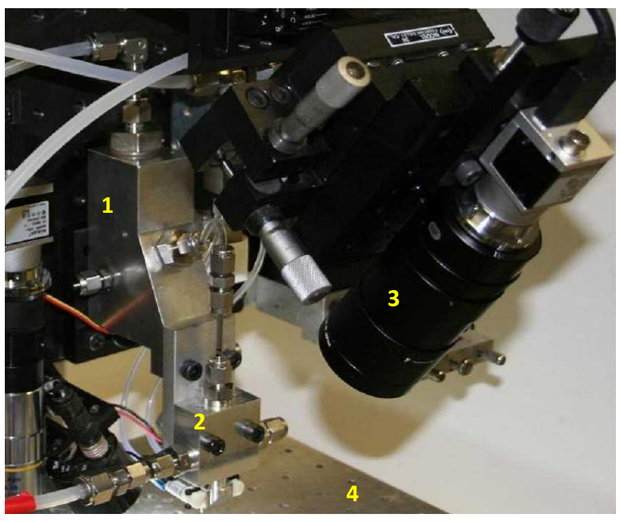

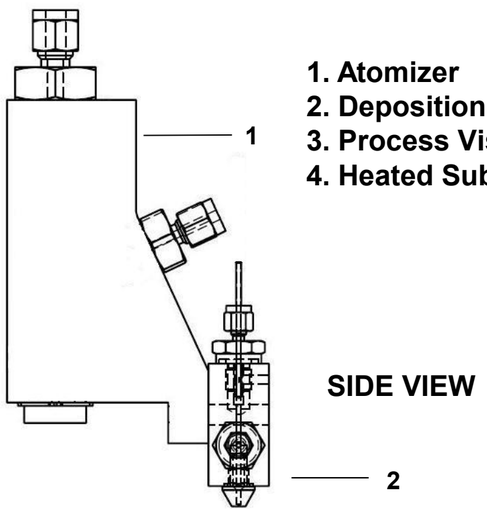

1. Atomizer
2. Deposition Head
3. Process Vision Module
4. Heated Substrate Platen

Silver Nanoparticle Ink	
Particle Size (nanometers)	~50
Silver Concentration	50%
Solvent	Ethylene glycol
Viscosity (cP)	1 - 200
Sintering Temperature (°C)	150 – 400 (nominal)
Resistivity (@ 300°C)	3 micro-ohm cm
Compatible Substrates	ITO (indium tin oxide), Glass, Silicon, Gold

Results

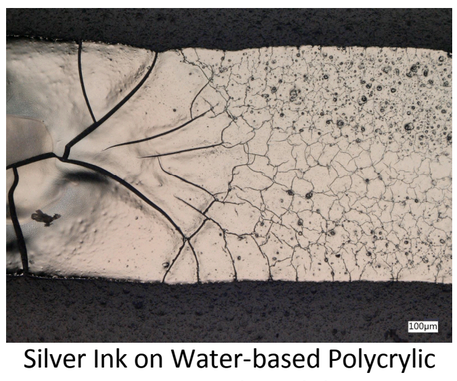

Silver Ink on Water-based Polycrylic Layer on Glass Slide

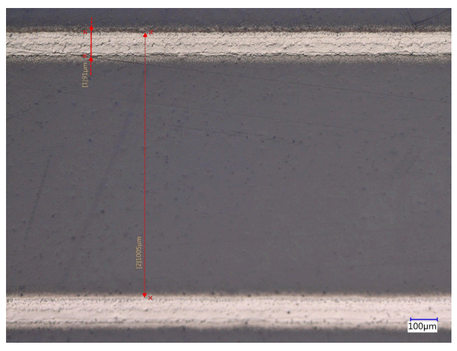

100µm Silver Printed Sensor Lines

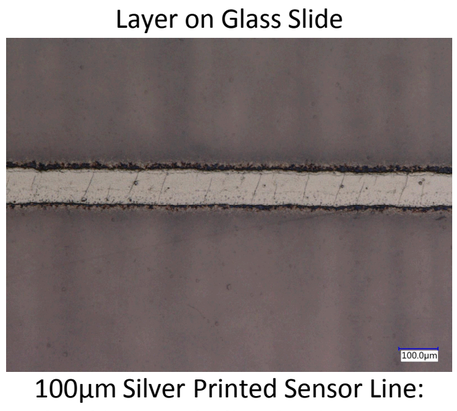

100µm Silver Printed Sensor Line: Cracking Precluding Strain Gauge

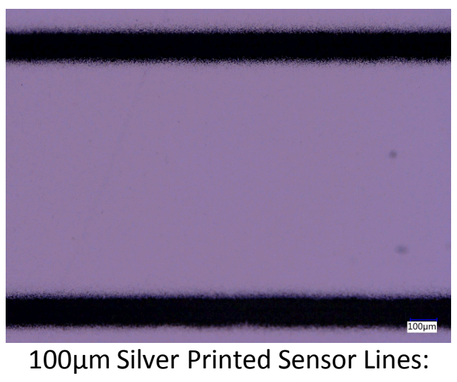

100µm Silver Printed Sensor Lines: Transmission Lighting

Silver Ink Strain Sensor Printed on PET

Printed Strain Sensor Sintering Curves

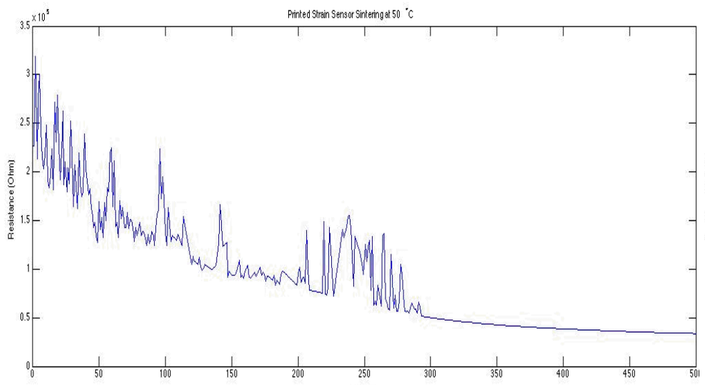

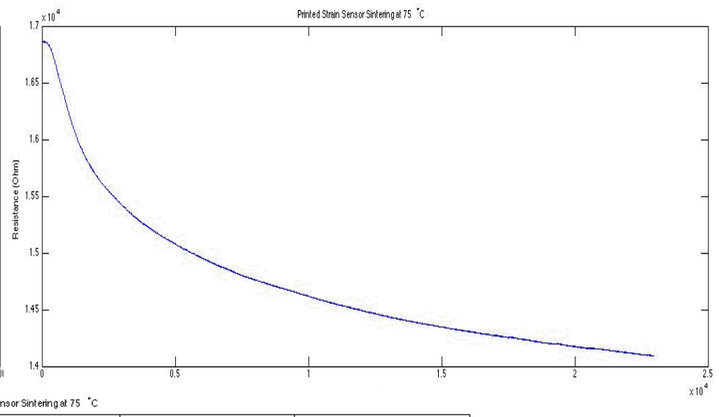

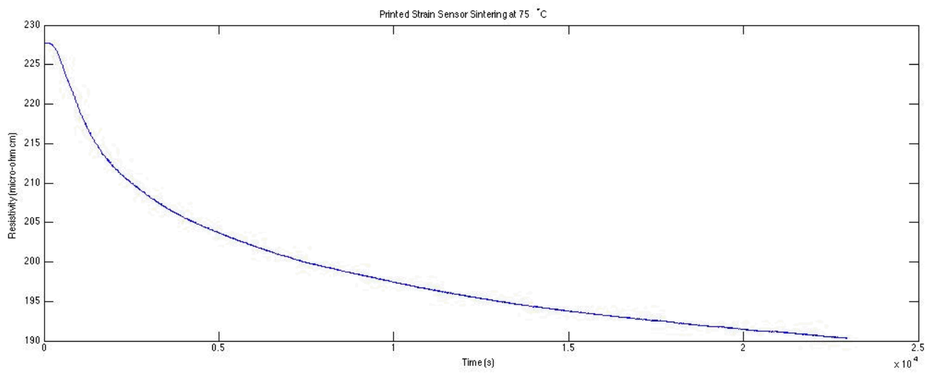

Conclusions

- Due to material compatibility and drastic maximum temperature differences, the silver ink on the water-based polyacrylic layer proved to be non-conductive. Heating the ink to an appropriate sintering temperature would damage the polyacrylic.
- Successful metallization of low-temperature polymer using aerosol-based printing.
- Printed silver ink sensors revealed a decrease in resistance with respect to time at a temperature of 50°C.
- Cracking of contact pads observed and eliminated by reducing pad thickness.
- Printed serpentine pattern (~4ft total length) showed no cracking of pads or lines.
- Sintering curve of silver obtained as a function of time for a printed structure.
- Resistivity of 118X Bulk Silver obtained at 75°C.

U.S. DEPARTMENT OF ENERGY

NNSA National Nuclear Security Administration

Sandia National Laboratories is a multi-program laboratory managed and operated by Sandia Corporation, a wholly owned subsidiary of Lockheed Martin Corporation, for the U.S. Department of Energy's National Nuclear Security Administration under contract DE-AC04-94AL85000.
SAND No. 2011-XXXXP