SANDIA REPORT
SAND2014-17817
Unlimited Release
Printed September 2014

Mooring Design for the Floating Oscillating Water Column Reference Model

Dorian Brefort, Diana Bull

Prepared by
Sandia National Laboratories
Albuquerque, New Mexico 87185 and Livermore, California 94550

Sandia National Laboratories is a multi-program laboratory managed and operated by Sandia Corporation, a wholly owned subsidiary of Lockheed Martin Corporation, for the U.S. Department of Energy's National Nuclear Security Administration under contract DE-AC04-94AL85000.

Approved for public release; further dissemination unlimited.

Sandia National Laboratories

Issued by Sandia National Laboratories, operated for the United States Department of Energy by Sandia Corporation.

NOTICE: This report was prepared as an account of work sponsored by an agency of the United States Government. Neither the United States Government, nor any agency thereof, nor any of their employees, nor any of their contractors, subcontractors, or their employees, make any warranty, express or implied, or assume any legal liability or responsibility for the accuracy, completeness, or usefulness of any information, apparatus, product, or process disclosed, or represent that its use would not infringe privately owned rights. Reference herein to any specific commercial product, process, or service by trade name, trademark, manufacturer, or otherwise, does not necessarily constitute or imply its endorsement, recommendation, or favoring by the United States Government, any agency thereof, or any of their contractors or subcontractors. The views and opinions expressed herein do not necessarily state or reflect those of the United States Government, any agency thereof, or any of their contractors.

Printed in the United States of America. This report has been reproduced directly from the best available copy.

Available to DOE and DOE contractors from
U.S. Department of Energy
Office of Scientific and Technical Information
P.O. Box 62
Oak Ridge, TN 37831

Telephone: (865) 576-8401
Facsimile: (865) 576-5728
E-Mail: reports@adonis.osti.gov
Online ordering: http://www.osti.gov/bridge

Available to the public from
U.S. Department of Commerce
National Technical Information Service
5285 Port Royal Rd.
Springfield, VA 22161

Telephone: (800) 553-6847
Facsimile: (703) 605-6900
E-Mail: orders@ntis.fedworld.gov
Online order: http://www.ntis.gov/help/ordermethods.asp?loc=7-4-0#online

SAND2014-17817
Unlimited Release
Printed September 2014

Mooring Design for the Floating Oscillating Water Column Reference Model

Dorian Brefort
Naval Architecture and Marine Engineering
University of Michigan
1221 Beal Avenue
Ann Arbor, MI 48109-2102

Diana Bull
Water Power Technologies
Sandia National Laboratories
P.O. Box 5800
Albuquerque, New Mexico 87185-MS1124

Abstract

To reduce the price of the reference Backward Bent Duct Buoy (BBDB), a study was done analyzing the effects of reducing the mooring line length, and a new mooring design was developed. It was found that the overall length of the mooring lines could be reduced by 1290 meters, allowing a significant price reduction of the system. In this paper, we will first give a description of the model and the storm environment it will be subject to. We will then give a recommendation for the new mooring system, followed by a discussion of the severe weather simulation results, and an analysis of the conservative and aggressive aspects of the design.

ACKNOWLEDGMENTS

This work was funded by the Department of Energy's Wind and Water Power Technologies Office. The work was in support of the DOE sponsored Reference Model Project (see http://energy.sandia.gov/rmp)

CONTENTS

1. Introduction.....7
2. Model Simulation.....7
3. BBDB Severe Weather Environment.....8
4. Mooring Specifications.....9
5. Simulation Results.....11
6. Discussion of Mooring Specification.....15
7. References.....18
Distribution.....19

FIGURES

Figure 1: BBDB Illustration.....6
Figure 2: Storm Wave Directionality at 630 and 40 m Depths.....8
Figure 3: Reference Model Mooring Layout.....9
Figure 4: BBDB Translational Motion in Severe Weather with Incident Direction of 30°.....12

TABLES

Table 1: Severe Weather Environment Characteristics at Test Site, assuming 600 m depth waves.....7
Table 2: Wave Characteristics at 630 and 40 m Depths.....8
Table 3: New Mooring System Specifications (810m Forward Line Lengths).....9
Table 4: Mooring Lines Specifications.....10
Table 5: Forward Anchor Specifications.....10
Table 6: Aft Anchor Specifications.....10
Table 7: Directional Case Simulation Results.....11
Table 8: Base Drag Case Simulation Results.....11
Table 9: Parametric Drag Study Results.....13
Table 10: Double Drag Coefficient Study Detailed Results.....13
Table 11: Parametric Drag Study for 40m Depth Wave Results.....14

1. INTRODUCTION

The mooring system of a Wave Energy Converter (WEC) represents a major portion of its total cost. To reduce the price of the reference Backward Bent Duct Buoy (BBDB), a study was done analyzing the effects of reducing the mooring line length, and a new mooring design was developed. It was found that the overall length of the mooring lines could be reduced by 1290 meters, allowing a significant price reduction of the system. In this paper, we will first give a description of the model and the storm environment it will be subject to. We will then give a recommendation for the new mooring system, followed by a discussion of the severe weather simulation results, and an analysis of the conservative and aggressive aspects of the design.

2. MODEL SIMULATION

The BBDB modeled in this paper is a type of oscillating water column composed of an L-shaped duct and air chamber, buoyancy chambers, and a power take-off turbine.[1] A sketch of the device can be seen in figure 1.

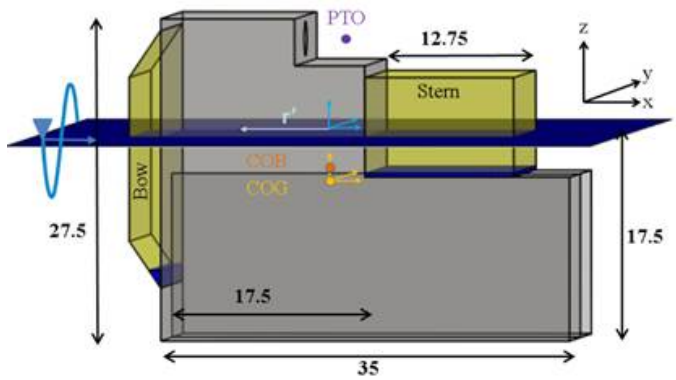

Figure 1: BBDB Illustration

During severe weather conditions, the device's diffraction parameter is small and its wave height to characteristic length ratio is large; therefore, the hydrodynamic forces on the device can be calculated using Morison's Equation.[1] This allows us to use OrcaFlex, a time domain mooring line dynamics software, to analyze the performance of the BBDB's mooring system.

To do this analysis in Orcaflex, "a model of the BBDB OWC was developed using an array of 6-DOF lumped bodies representing

- buoyancy distribution,
- freely flooding bodies that account for the time-dependent variation of entrained water mass, and
- hydrodynamic characteristics that account for inertial and viscous effects.

The array of lumped bodies is then attached to a reference body that acts as the integrand of the loading effects. Separating individual responses allows for each to be treated independently and in a manner that is consistent with the phenomenon being modeled; for example the bodies representing the buoyancy distribution will not be assigned mass or hydrodynamic properties, they will only be assigned volumes."[1]

Additionally, the WEC mass and moment of inertia are concentrated in a 6 DOF, modeling a point mass.
A more detailed description of the model and simulation assumptions can be found in the paper referenced throughout this section: Bull and Jacob, "Methodology for creating nonaxisymmetric WECs to screen mooring designs using a Morison Equation approach".[1]

3. BBDB SEVERE WEATHER ENVIRONMENT

The reference BBDB model was designed to operate in a near shore Northern California environment. Ocean data was collected at a site near Eureka, CA, and it is summarized in table 1.[2]

	Depth	59.6 [m]
Spectral Parameters	Significant Wave Height	11.22 [m]
	Peak Period	17.26 [sec]
	Spectrum	JONSWAP or Bretschneider
Sinusoid Equivalent	Equivalent Wave Height	21.3 [m]
	Period	17 [sec]
	Wave Type	5th order Dean Stream
Wind Profile	100 yr Wind at 10[m] above SWL	29.6 [m/s]
	Wind Profile	constant
Current Profile	10yr Surface Current	0.33 [m/s]
	Current Profile	linear decrease to zero

Table 1: Severe Weather Environment Characteristics at Test Site, assuming 600 m depth waves

This data applies to a buoy located at a depth of approximately 600 m, and is conservative for two reasons. First, wave height shown here is higher than for a 60 m depth in which the device will be located. Second, in the 60 m depth case, waves will likely hit the device along a side that can resist much higher loads than in the 630 m case.

A study done in SWAN and summarized in table 2 shows wave height differences between a 600 meter depth and a 40 m depth. We can see that the regular wave equivalent height of the 40 m depth is 3.5 meters shorter than that of the 600 meter depth. The BBDB device will operate in a water depth of 60 meters, so we can expect storm condition regular wave equivalent heights close to 18 meters.

Data on the directionality of storm waves is shown in figure 2. Notice that for a 40 meter depth, storm wave incident direction is a lot more peaked than for the 600 m depth case. Furthermore, at 40 m depths, storm direction is very close to the operational waves.

SWAN Results for Storm Waves Propagating from a 630 m Depth to a 40 m Depth

		Storms at ~600 m Depth	Southern Storm at 40 m Depth	Northern Storm at 40 m Depth
Spectral Wave Data	Significant Wave Height	11.22 m	9.39 m	9.35 m
	Peak Period	17.26 sec	17.13 sec	17.13 sec
	Incident Direction	243 degrees	273 degrees	318 degrees
	Spectrum	JONSWAP or Bretschneider	JONSWAP or Bretschneider	JONSWAP or Bretschneider
Regular Wave Data				
	Equivalent Height	21.32 m	17.84 m	17.77 m
	Period	17 sec	17 sec	17 sec
	Wave Type	5th order Dean Stream	5th order Dean Stream	5th order Dean Stream

Table 2: Wave Characteristics at 630 and 40 m Depths

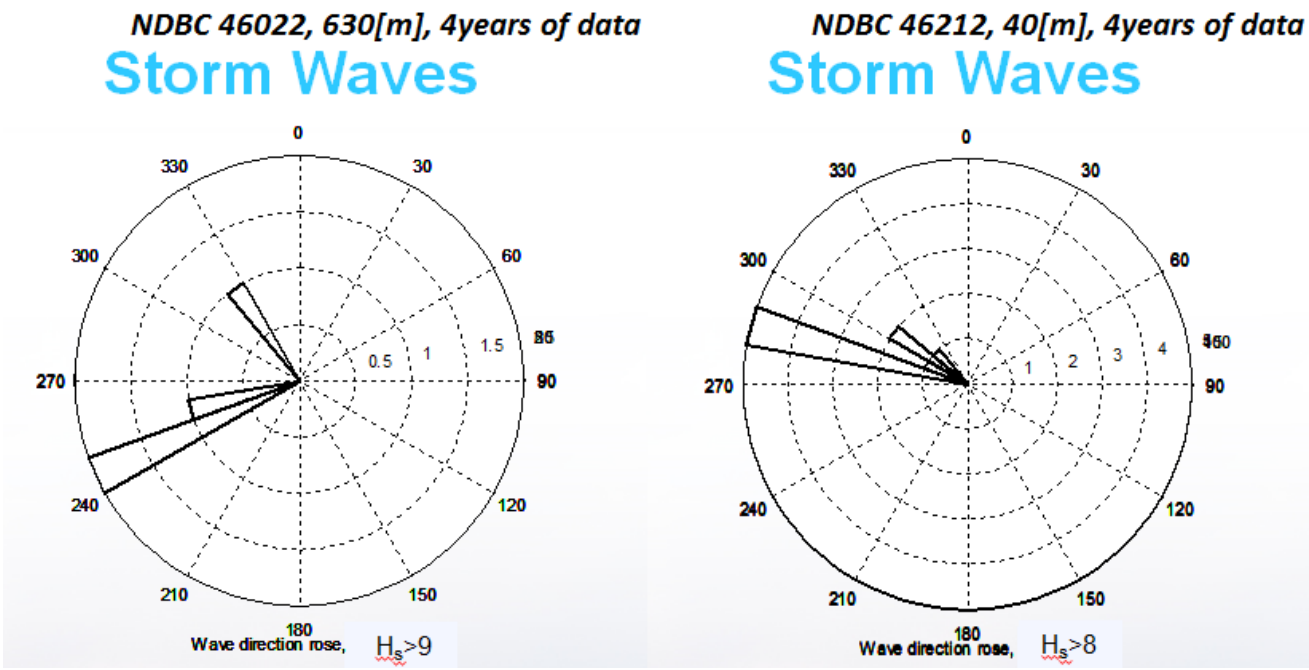

Figure 2: Storm Wave Directionality at 630 and 40 m Depths

4. MOORING SPECIFICATIONS

As mentioned in the introduction, the overall mooring line length was greatly reduced. The original configuration had 3110 meters with all three lines combined (Port and Starboard were 1230 m each, Aft was 650 m), but after study it was determined that the combined line length could be reduced to 1820 meters. The mooring specifications of the new layout are described in table 3.

New Mooring System Specification

		Port			Starboard			Aft		
Total Length	**[m]**	810			810			200		
Polyester length	**[m]**	45			45			45		
Chain length	**[m]**	765			765			155		
Line Length in Water Column	**[m]**	137.5			137.5			103.5		
Declination Angle	**[deg]**	122.8			122.8			113.9		
Initial Tension	**[kN]**	110.4			110.4			18.4		
Anchor Location	**[m]**	**x**	**y**	**z**	**x**	**y**	**z**	**x**	**y**	**z**
		-705.4	-401.38	-59.6	-705.4	401.38	-59.6	200	0	-59.6
Attachment on OWC	**[m]**	**x**	**y**	**z**	**x**	**y**	**z**	**x**	**y**	**z**
		-8.75	-13.25	-8.75	-8.75	13.25	-8.75	26.25	0	-8.75

Table 3: New Mooring System Specifications (810m Forward Line Lengths)

The mooring layout was designed to maximize energy production in the operational climate but still have high reliability in severe weather conditions at the chosen test site near Eureka, CA. Wave incident direction during severe weather conditions mostly come from a ±15º direction from the operational wave direction. Therefore, the mooring was laid out to have two front lines separated by 60º with the bisector of that angle and the aft line along the operational incident wave direction. A layout of the mooring system is shown in figure 3.

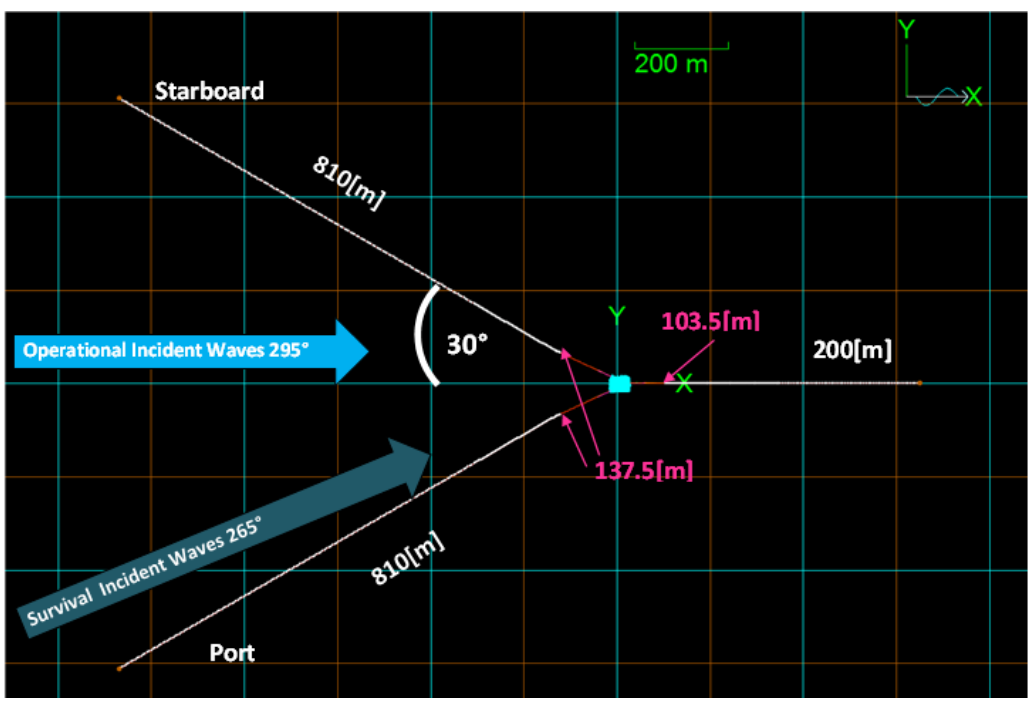

Figure 3: Reference Model Mooring Layout

A. Mooring Lines Specifications

The loads in the line increased approximately 7% after shortening the lines. The original 58 mm chain was found to be sufficient in out of factory conditions. The original 137 mm polyester, 12 plait, synthetic line is also still sufficient, so it will be kept. The diameter and breaking load for each is shown in table 4.

Lines		**R4 Chain**	**Polyester**
Diameter	**[mm]**	58	137
Diameter	**[in]**	2.28	5.5
Breaking Load	**[kN]**	3628	5754

Table 4: Mooring Lines Specifications

B. Anchor Specifications

Anchor recommendations are made using the Stevpris Mk6 anchor[3] as a reference.
For the fore anchors, a 3300 kN (335 Te) holding load is recommended. For the aft line, the smallest Stevpris Mk6 anchor is sufficient, having a holding load between 510 and 883 kN depending on the type of soil. Characteristics of the anchors are shown in table 5 and 6. The soil at the test site is believed to be soft clay, but it needs to be confirmed.

Fore Anchors:	**Holding Load 3300 kN (335 Te)**		
Soil Type	**Mk6 Mass (Te)**	**Drag (m)**	**Penetration (m)**
Sand/Hard clay	3.8	22	3.2
Medium Clay	5	40	7
Soft Clay	7	70	14

Table 5: Forward Anchor Specifications

Aft Anchor				
Soil Type	**Mk6 Mass (Te)**	**Drag (m)**	**Penetration (m)**	**Hold Load (kN)**
Sand/Hard clay	1	14	2.1	882.9
Medium Clay	1	25	4.2	706.32
Soft Clay	1	38	7.5	510.12

Table 6: Aft Anchor Specifications

5. SIMULATION RESULTS

Severe weather analysis was performed under a variety of conditions which are described below. As recommended by DNV rules,[4] the extreme environment was assumed to consist of collinear waves, current, and wind. Severe weather simulations were run by setting the extreme weather incident direction collinear with the port mooring line to evaluate the maximum load that it would experience and size the forward mooring lines appropriately.
First, a directional study is presented to show the dependence of the line and buoy loads on the wave direction. The case that experiences the highest loads is then presented in more detail.

Finally, to account for the uncertainty of the model's drag coefficients, simulations with double and quadruple drag coefficients in surge and sway are presented.

A. Directional Study

Storm waves will never come from exactly one direction, but at the chosen test site near Eureka, CA, it is know that storm waves mainly come at an angle between 0 and 30 degrees from the operational wave direction. The purpose of this section is to present the results of a study that had the purpose of evaluating the load changes in the mooring lines as the incident waves shifted between 0 and 30 degrees with respect to the center buttocks line of the BBDB. A summary of the results are shown in table 7. It can be seen that all loads are well below failure loads.

Case	Direction [degrees]	Peak Line Load-Port [kN]	Peak Anchor Load-Port [kN]
1	0	1833	1710
2	15	2037	1960
3	30	2205	2139

Table 7: Directional Case Simulation Results

As expected, the load on the buoy is shifted from both front mooring lines, to primarily the port one. We can see an approximate increase of 10 and 20 % of the peak line load as the wave shifts to 15 and 30 º incident directions. The load in the starboard lines decrease by approximately the same amount. In all directional cases, line and anchor load are well below the breaking load of the device, with safety factors between 1.65 and 2 for the line, and safety factors between 1.50 and 1.93 for the anchor. The case with the highest loads is the 30º case; therefore, we will use it as the basis for the parametric drag study. More detailed results for the 30 degree case follow.

B. Base Drag Coefficient Study

The base case has the following drag coefficients, Cdx = 1.2, Cdy = 1.2, Cdz = 5, and fundamental results are summarized in table 8 and figure 4.

Base Drag Fundamental results (Incident Direction 30º)			
	Port	**Stbd**	**Aft**
Hangoff Max Tension [kN]	2205	1360	39
Anchor Max Tension [kN]	2139	1263	20
Chain Max Tension [kN]	2196	1335	40
Polyester Max Tension [kN]	2205	1360	41
Layback [m]	648	422	67

Table 8: Base Drag Case Simulation Results

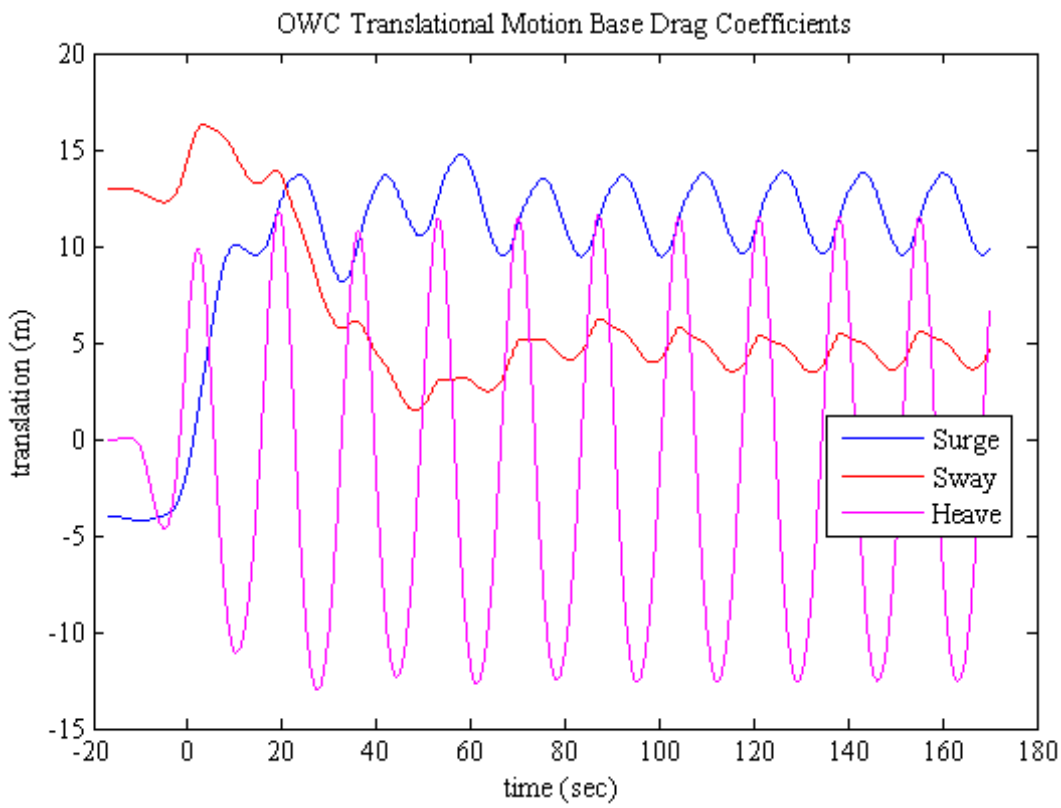

Figure 4: BBDB Translational Motion in Severe Weather with Incident Direction of 30°

The maximum hangoff tension increased by 5.6% compared to the model with 1230 meter lines but the new model still has a 1.65 factor of safety for the chain and a 2.61 factor of safety for the polyester. A lower safety factor is allowable for the chain because of its long historical use in offshore mooring systems. The anchor holding capacity of 3300 kN is sufficient and for this base drag coefficients case and provides a safety factor of 1.54.

C. Parametric Drag Coefficient Study

Because of the importance of the drag coefficient in Morison's Equation, and the uncertainty of drag coefficient values in oscillatory flow, it was decided to run the severe weather mooring line analysis after doubling and quadrupling surge and sway drag coefficients. Additional runs were made after modifying heave drag coefficient. Peak line and anchor loads are shown in table 9 for all drag run cases. Values in green are below the failure point, whereas red ones are above the mooring components breaking load. The amount of cases failing can be worrisome to the reader, but these concerned will be addressed in section VI of this paper.

test	CD Specification			Peak Line Load-Port [kN]	Peak Anchor Load-Port [kN]
	Heave	Surge	Sway		
1	5.0	1.2	1.2	2205	2139
2	2.5	1.2	1.2	3344	3293
3	7.5	1.2	1.2	2019	1948
4	5.0	2.5	1.2	3526	3509
5	5.0	5.0	1.2	5324	5325
6	5.0	1.2	2.5	3547	3535
7	5.0	1.2	5.0	5561	5560
8	5.0	2.5	2.5	4670	4668
9	7.5	5.0	5.0	7802	7809

Table 9: Parametric Drag Study Results

The only case that has a reduced load is the 7.5 heave case. All other cases see highly increased loads. Doubling surge or sway coefficients increased the peak line load by approximately 60%, and quadrupling them increased the peak line load by 147%. Current line specifications would still be good in the double surge or sway drag coefficients cases, but there would be no safety factor. It is recommended to use a 73 mm chain if a 2.5 surge or sway drag coefficient is found to be a realistic value. This would give a safety margin, increasing the chain reliability in the event of a storm that could occur after several years of the chain weakening due to fatigue and corrosion. Furthermore, an anchor with a 650 ton (or 6375 kN) holding load is recommended for these cases. For the Stevpris Mk6 anchor model, this would represent an 8.5 ton anchor for hard clay and sand seabed, and a 16 ton anchor for soft clay soil. However, these increased drag coefficients in surge and sway would result in high costs increases. This study was done to help determine the dependence of loads on drag coefficients and determine the mooring components necessary for survival under different conditions; it therefore can help a developer estimate the cost of a reference BBDB geared to a particular condition. The effects of doubling surge and sway drag coefficients are given in table 10.

2.5 Surge Cd				2.5 Sway Cd	All Sway Cd Below Still Water Line = 2.5. Above it, Cdy = 1.2		
	Port	Stbd	Aft		Port	Stbd	Aft
Hangoff Max Tension [kN]	3526	2127	31	Hangoff Max Tension [kN]	3547	382	40
Anchor Max Tension [kN]	3509	2036	20	Anchor Max Tension [kN]	3535	258	20
Layback [m]	782	592	64	Layback [m]	798	186	79

Table 10: Double Drag Coefficient Study Detailed Results

6. DISCUSSION OF MOORING SPECIFICATION

A. Conservative Aspects of the Design

1) The environmental conditions are conservative.
   a) At 60 m depth, the wave height of the storm will be lower as shown by SWAN results for the BBDB. (From 600 m depth to 40 m depth drop from a Hs of 11.22 m to 9.39 m). The results discussed above are calculated for the 600 m depth wave.
   b) At 60 m of depth, the waves will have begun to refract; therefore the loads will be more distributed among all legs of the buoy, reducing the load on the port line modeled in this paper.

2) Line loads are conservative for two reasons
   a) The results shown above are calculated for the 600 m depth wave. Simulations done for the 40 m wave showed a significant reduction of load, as can be seen in table 11. For the base drag case (Cdx = 1.2, Cdy = 1.2, Cdz = 5) the maximum hangoff tension decreased by 19% to 1797 kN, and the anchor tension decreased by 22% to 1675 kN. For the double drag coefficient in sway, the chain has a 1.49 safety factor and the anchor has a 1.38 safety factor. Even the 'bad' drag case (ie. both surge and sway drag coefficients are doubled to 2.5) would survive under these 40 m depth waves but the factors of safety would be insufficient, being 1.11 and 1.0 for the chain and anchor respectively. The test site will be placed at 60 m depth, so the loads will be slightly higher than the ones showed in table 9; however, they will still be significantly lower than the loads described for the 600 m depth.

test	CD Specification			Peak Line Load-Port [kN]	Peak Anchor Load-Port [kN]
	Heave	Surge	Sway		
1	5.0	1.2	1.2	1797	1675
2	5.0	2.5	1.2	2439	2376
3	5.0	1.2	2.5	2446	2386
4	5.0	2.5	2.5	3265	3237

Table 11: Parametric Drag Study for 40m Depth Wave Results

   b) At 60 m of depth, the waves will have begun to refract and thus it is unlikely that the storm will only hit along one leg as it is modeled now. From a 600 m depth to a 40 m depth SWAN shows waves coming up 243 degrees refracting to 273 degrees. We are using the worst case scenario of 265 degrees (30 degrees from operational waves), so perhaps the loads are really a little less severe than modeled. SWAN results show storm waves coming from an angle of 22 degrees from operational waves, so the loads will be smaller and more distributed between the two front lines than in the 600 m calculations.

3) Anchor size is conservative.
   a) For the forward anchors at the 600 m depth waves, have a safety of factor of 1.54, equivalent to a 1161 kN margin between the maximum expected anchor load and the

anchor holding capacity. The large safety factor was decided upon based on the large laybacks and loads experienced by the lines when the surge and sway drag coefficients are doubled.

b) The aft anchor size is very conservative. The smallest Stevpris Mk6 available has a holding capacity between 510 and 883 kN depending on the seabed soil. Even at the minimum holding capacity, the safety factor of the aft anchor is 25.5. A smaller anchor could be used.

4) Line length is conservative for the base drag coefficient case. The maximum layback is 648 meters in these conditions, but a longer line length was chosen to allow for an increase in drag coefficients. When the surge or sway coefficients equal 2.5, the line length is still sufficient but has a very small margin before the entire line is lifted from the seabed.

5) The aft line is conservatively sized. The maximum expected load in the aft line is 40 kN. However, its holding capacity is the same as the forward lines (58mm R4 chain and 137 mm polyester). A much smaller and cheaper line could be used and still ensure survival in severe weather conditions.

B. Aggressive Aspects of the Design

1) Viscous drag coefficients in Surge and Sway directions are aggressive. Steady flow drag coefficients of 1.2 were guessed for these values. A study looking at altering these values (doubling and quadrupling them) shows that they will dramatically increase the mooring loads. If either of these values is doubled, the mooring design will survive, but will not have necessary safety factors; however, if either of these values is quadrupled then the design will fail. In addition if both of these values are doubled (i.e. heave drag is 5, surge drag is 2.5, and sway drag is 2.5) then the design will also fail.

2) In the parametric drag study, when modifying sway drag coefficients, only the elements with a drag coefficient below the still water line were modified. In the double sway drag coefficient case, if all elements Cdy were changed to 2.5, the port chain would fail.

3) The electric cable was not modeled at all. No knowledge of the bend stiffener requirements has been deduced.

4) I did not run any operational waves. Operational waves with high directionality are when the aft line in the mooring system will be really used—I have changed this aft line based off of the survival conditions and hence it now may be undersized (the anchor and amount of line in the model)

5) The mooring design does not consider loss of material strength with time due to fatigue and corrosion. Towards the end of the BBDB's design life, the minimum breaking load of the mooring lines and the holding capacity of the anchors will be lower than in out of factory conditions. The factor of safety can help mitigate the risk of failure due to weakening material strength, but a study analyzing the effects of time on the mooring system should be done.

7. REFERENCES

1. Bull, D. & Jacob, P. Methodology for creating nonaxisymmetric WECs to screen mooring designs using a Morison Equation approach. in *Oceans, 2012* 1–9 (2012). doi:10.1109/OCEANS.2012.6404870
2. Berg, J. C. Extreme Ocean Wave Conditions for Northern California Wave Energy Conversion Device. *Sandia Natl. Lab. Doc. SAND2011-9304* (2011). at <http://prod.sandia.gov/techlib/access-control.cgi/2011/119304.pdf>
3. *Anchor Manual 2010: The Guide to Anchoring*. 188 (Vryhof Anchors, 2010). at <http://www.vryhof.com/anchor_manual.pdf>
4. Det Norske Veritas. *Position Mooring*. (2010). at <http://engineers.ihs.com/document/abstract/MWDJQCAAAAAAAAAA>

DISTRIBUTION

1 Naval Architecture and Marine Engineering
University of Michigan
1221 Beal Avenue
Ann Arbor, MI 48109-2102
Attn: Dorian Brefort

1	MS0734	Margaret Gordon	6124 (electronic copy)
1	MS1124	Diana Bull	6122 (electronic copy)
1	MS0899	Technical Library	9536 (electronic copy)

Sandia National Laboratories