FOSSIL ENERGY

DQE/ID/13223-2
(OSTI ID: 12524)

RADON EMANATION FROM NORM-CONTAMINATED PIPE SCALE, SOIL, AND SEDIMENT AT PETROLEUM INDUSTRY SITES

Final Report
August 1999

By
G.J. White
A.S. Rood

Date Published: October 1999

Work Performed Under Contract No. DE-AC07-94ID13223

Lockheed Idaho Technologies Inc
Idaho National Engineering & Environmental Laboratory
Idaho Falls, Idaho

National Petroleum Technology Office
U. S. DEPARTMENT OF ENERGY
Tulsa, Oklahoma

DISCLAIMER

This report was prepared as an account of work sponsored by an agency of the United States Government. Neither the United States Government nor any agency thereof, nor any of their employees, makes any warranty, expressed or implied, or assumes any legal liability or responsibility for the accuracy, completeness, or usefulness of any information, apparatus, product, or process disclosed, or represents that its use would not infringe privately owned rights. Reference herein to any specific commercial product, process, or service by trade name, trademark, manufacturer, or otherwise does not necessarily constitute or imply its endorsement, recommendation, or favoring by the United States Government or any agency thereof. The views and opinions of authors expressed herein do not necessarily state or reflect those of the United States Government.

This report has been reproduced directly from the best available copy.

DISCLAIMER

Portions of this document may be illegible in electronic image products. Images are produced from the best available original document.

DOE/ID/13223-2
Distribution Category UC-122

Radon Emanation from Norm-Contaminated Pipe Scale, Soil, and Sediment at Petroleum Industry Sites

By
G.J. White
A.S. Rood

October 1999

Work Performed Under Contract DE-AC07-94ID13223

Prepared for
U.S. Department of Energy
Assistant Secretary for Fossil Energy

John Ford, Project Manager
National Petroleum Technology Office
P.O. Box 3628
Tulsa, OK 74101

Prepared by
Lockheed Idaho Technologies, Inc.
Environmental Assessment Technologies
Idaho National Engineering and Environmental Laboratory
P.O. Box 1625-2213
Idaho Falls, ID 83415-2213

CONTENTS

1. Introduction 1

2. Materials and Methods 5
   2.1. Sample Collection Sites 5
   2.2. Sample Collection 6
   2.3. Sample Analysis 7

3. Results and Discussion 11
   3.1. Pipe Scale 11
   3.2. Soil 12

4. Conclusions 17

5. References 19

Appendix 1. Summary of Analytical Data by Site

EXECUTIVE SUMMARY

This report describes a study of radon (Rn) emanation from pipe scale and soil samples contaminated with naturally occurring radioactive material (NORM). Samples were collected at petroleum production sites in Oklahoma, Michigan, Kentucky, and Illinois. For comparison, data are also presented from preliminary studies conducted at sites in Texas and Wyoming. All samples collected were analyzed for their Rn emanation fraction, defined as the fraction of ^{222}Rn produced that enters the interconnected pore space within a medium contaminated with ^{226}Ra before the ^{222}Rn undergoes radioactive decay. This measure represents one of the important parameters that determine the overall Rn activity flux from any solid medium. The goal of this project was to determine whether Rn emanation from pipe scale and soil is similar to emanation from uranium mill tailings.

Pipe scale samples were collected at four of the sites, and consisted primarily of barite scale where radium (Ra) atoms replaced barium (Ba) within the crystal lattice of the scale. Scale from sites in Texas and Oklahoma were removed from the interiors of pipe that had become clogged with barite scale. In contrast, NORM-contaminated scale from the site in Michigan was in the form of a thin barite deposit on the surface of the pipe casing. Scale from a site in Kentucky was collected from a pipe cleaning facility.

Soil samples were collected from areas exhibiting elevated surface gamma exposure rates indicating the presence of NORM, and consisted of the upper 15 cm soil depth. The uniformity of NORM contamination within the sample was not determined, and in some cases may have been restricted to small fragments of barite scale in the soil. All pipe scale and soil samples were analyzed for ^{226}Ra concentration as part of the method for determining ^{222}Rn emanation fraction. For comparison, these same parameters are reported for 11 uranium mill tailings samples provided from a site in Utah.

Although ^{226}Ra concentrations from pipe scale samples were similar to those found in uranium mill tailings, ^{222}Rn emanation from pipe scale was generally lower in pipe scale. This is likely due to physical differences between the two media and to the method by which the Ra is deposited in the material. Radon emanation from soils was extremely variable owing not only to differences in physical and chemical soil properties, but also to the means by which NORM has entered the soil. Although additional emanation measurements from other sites are needed, the data collected at these three

sites indicate that regulations intended to protect human health from ^{222}Rn inhalation should consider the type and properties of the medium in which the NORM is contained, rather than relying strictly on concentrations of the parent ^{226}Ra.

1. INTRODUCTION

Most minerals in the earth's crust contain small, but measurable concentrations of naturally occurring radioactive materials (NORM), and the geochemical properties associated with petroleum formation can often result in locally elevated concentrations of ^{238}U and ^{232}Th within source rocks (Snavely, 1989). Isotopes of Ra and Rn are key components of both the ^{238}U and ^{232}Th decay series (Figure 1). Under certain physical and chemical conditions, brines or formation waters present within the petroleum producing geologic formation may leach Ra from clays. Although the initial production of oil and gas from a reservoir is typically "dry", as the natural pressure within the petroleum bearing formation falls, the formation water may be increasingly produced along with the oil and gas (Smith 1987). Radium may be among the dissolved constituents in these produced waters, and isotopes of Ra are estimated to comprise over 90% of the total radioactivity (excluding ^{222}Rn) found therein (Snavely, 1989; EPA, 1991). In contrast, only trace amounts of ^{238}U, ^{232}Th, ^{228}Th, ^{210}Pb, ^{210}Po, and other NORM radionuclides are typically transported to the surface in produced water because of the lower solubilities of these elements.

As produced waters are brought to the surface, decreases in temperature and pressure allow solutes to precipitate (Smith, 1987). This can result in the formation of hard, extremely insoluble scale deposits on the interior surfaces of piping, on casing materials, and on other production equipment. In the case of piping, these deposits may eventually restrict flow sufficiently to require replacement of the scaled pipe segments (e.g. Raabe, 1996; Bernhardt et al., 1996). If elevated concentrations of Ra are dissolved in the produced waters, the Ra may co-precipitate along with Ba and Ca as complex sulfates or carbonates (EPA, 1991). Total Ra concentrations in produced waters and pipe scale are dependent on diverse factors, including the amount of Ra present in the subsurface formation, formation water chemistry, the extraction and treatment processes employed during production, and the age of production. The formation of these hard scales is also related to factors such as flow rate, reservoir delivery time, and geologic structure (Bassignani et al., 1991). Details of the characteristics of scale formation in well pipes are discussed by Wilson and Scott (1992).

The concentrations of Ra found in barite scales can vary from background levels up to several thousand pCi/g (Baird et al., 1990). However, the U.S. Environmental Protection Agency (EPA) has reported concentrations as high as 410,000 pCi/g (EPA, 1993). Surveys of oil and gas wells sampled in Oklahoma, Texas and Louisiana indicated that from 50% to 75% of the facilities had produced water containing ^{226}Ra concentrations of over 50 pCi L^{-1} (Snavely, 1989), and the EPA has estimated that as many as one-third of all domestic oil and gas wells produce some Ra-contaminated scale (EPA, 1991). By way of contrast, a study conducted in Italy involving 544 facilities, indicated that scale formation was small, with quantity of scale produced rarely exceeding 10 kg per plant per year (Bassignani et al., 1991).

In a study involving over 36,000 external gamma measurements at American Petroleum Institute (API) member facilities in 20 states and three offshore areas, a total of 14.9% of the leases examined were found to have external gamma readings above background with a maximum reading of 3.5 mR h^{-1} (Otto, 1989). As with most NORM surveys conducted to date, however, this did not provide a statistical representation of the industry because many of the wells investigated were known to be associated with elevated radioactivity. Although the presence of elevated NORM concentrations in petroleum reservoirs and in oil and gas production and processing facilities has been recognized since the early 1930s (EPA, 1991), concerns have been recently expressed regarding the potential for radiation exposure from uncontrolled releases of NORM to the public. However, large uncertainties remain in estimates of the extent and potential ramifications of NORM contamination in the petroleum industry.

The focus of health concerns related to NORM associated with petroleum production involves the generation and release of chemically inert Rn gas. Radioactive decay of ^{226}Ra (from the uranium decay series) results in formation of ^{222}Rn (3.82 d half life). Decay of ^{228}Ra originating from the thorium decay series also yields an isotope of radon (^{220}Rn), but one with a much shorter half life (55 s) Because of the short half life of ^{220}Rn, this isotope does not pose as serious a problem from a transport and exposure standpoint.

Radon present in pore space of the material may be transported to the surrounding atmosphere via advection or diffusion. The risks associated with the handling and disposal of materials contaminated with ^{226}Ra are mostly due to ^{222}Rn progeny, the inhalation of which has been associated with an increased risk of lung cancer (NAS, 1988). The risks associated with the handling and disposal of NORM

contaminated material are dependent on the overall rate at which Rn is released from the material matrix.

The term ***radon emanation fraction*** is commonly defined as that fraction of the total Rn contained in a material that is released from the material and free to migrate from the material in the gas phase. The physical properties of the Ra-bearing material largely determine the Rn emanation fraction associated with the material. These physical properties include: (1) the distribution of Ra within the material; (2) whether the material is massive or granular; (3) the type and magnitude of porosity of the material; (4) the moisture content of the material; and (5) the effective Rn diffusion coefficient in the material. These various properties can interact in complex ways that are often counterintuitive. Additional information on emanation mechanisms is available elsewhere (Tanner, 1980).

To date, several states including Texas, Louisiana, and Mississippi have implemented NORM regulations that focus on the oil and gas industry (Cameron, 1996), and many other states are considering implementation of such regulations. Smith et al. (1998) identified five general categories of NORM regulation by states: (1) development of NORM exemption standards or action levels; (2) license requirements for parties possessing handling, or disposing of NORM; (3) release of NORM-contaminated equipment and land; (4) worker protection; and (5) disposal of NORM wastes. Action levels for managing petroleum industry wastes as NORM wastes vary between states, ranging from 5 to 30 pCi g^{-1} of total Ra (^{226}Ra plus ^{228}Ra). Several states have established dual action levels distinguished by the Rn emanation rate of the NORM-contaminated waste. In these states, the action level is typically 5 pCi g^{-1} total Ra if the Rn emanation rate is in excess of 20 pCi m^{-2} s^{-1} and 30 pCi g^{-1} total Ra if the Rn emanation rate is below 20 pCi m^{-2} s^{-1}.

Although ^{222}Rn is the primary concern from a public health standpoint, regulations to date have generally been based on activity concentrations of Ra in the contaminated material. However, the relationship between ^{222}Rn concentration and radiation dose to humans is highly variable, depending in part on the ^{222}Rn emanation fraction. Because of the complex way that the physical properties of the scale materials may interact, direct measurement of the emanation fraction are needed to better estimate the exposure potential of oil field NORM.

In general, state regulations for the release of NORM-contaminated lands are derived from standards developed pursuant to the Uranium Mill Tailings Radiation

Control Act of 1978 (Title 42, United States Code 7901, et seq.). These generally allow for the release of lands for unrestricted use provided the total Ra concentration in the upper 15 cm of soil is # 5 pCi/g, as averaged over 100 m^2. Several states have established two release standards based on the Rn emanation rate of the NORM remaining in the soil: if the Rn emanation rate is above 20 pCi m^2 s^{-1}, the release standard is 5 pCi g^{-1} of total Ra, and if the Rn emanation rate is below that level, the release standard is 30 pCi g^{-1} (Smith et al., 1998).

The objectives of this investigation were to determine ^{222}Rn emanation fraction of Ra-containing barite scale and soils found at petroleum exploration and production sites over a wide geographic area.

2. MATERIALS AND METHODS

2.1 Sample Collection Sites: Pipe scale and/or soil samples were collected at sites in Oklahoma, Michigan, Kentucky, and Illinois in addition to those collected during earlier studies from sites in Texas (Rood et al., 1998) and Wyoming (White et al., 1999). Specific locations of sampling sites are not disclosed at the request of some of the site operators and/or land owners. Several of these sites were sampled in collaboration with Dr. James Otton of the U.S. Geological Survey, who was conducting a related study.

Oklahoma - Ten pipe scale and ten surface soil samples were collected at a variety of sites within the same production area in northern Oklahoma. Three background soil samples were also collected from an uncontaminated site. A total of ten miscellaneous samples were also collected at these sites, consisting of residual solid material from a rusted storage tank, and material collected from the surface of a dirt road that indicated NORM contamination. The ten pipe scale samples were collected from scale deposits that were clogging three abandoned, rusted out pipes. Soil samples were collected from two different sites separated by approximately five miles.

Michigan – In Michigan, eight pipe scale and nine soil samples were collected from two sites separated by approximately 10 miles. In comparison with samples collected from other sites, the pipe scale samples collected in Michigan were somewhat unique in that they were in the form of thin deposits found on the outside of pipe casing. Unlike the clay loam soils collected at other sites, soil samples from Michigan were extremely sandy, suggesting potentially different physical characteristics that may influence Rn emanation. Three background soil samples were also collected at this site.

Kentucky – Samples in Kentucky were collected from sites in two different production fields separated by a distance of over 100 miles. These included ten pipe scale samples and a total of 16 surface soil samples of varying characteristics. In this case, pipe scale samples were collected from a pipe cleaning facility, which resulted in samples of finer particle size than those collected at other sites. Three sediment samples and three background soil samples were also collected from one of the sites.

Illinois – A total of ten soil samples were collected from a former production site in southern Illinois. No pipe scale was available at this site, and cleanup efforts had reduced the contamination levels substantially in comparison with conditions found at the site in 1995 and 1996 by Dr. James Otton of the U.S. Geological Survey and his colleagues.

Texas - In a preliminary study conducted in 1992, a total of 20 pipe scale samples were collected from a facility in Texas (Rood et al., 1998). No soil samples were collected at this site.

Wyoming - A separate study was conducted in 1997 to characterize the National Petroleum Reserve Number 3 at Teapot Dome, Wyoming for NORM contamination. Radon emanation measurements were conducted on 14 soil and sediment samples collected at this site (White et al., 1999).

2.2 Sample Collection: Specific techniques for collecting samples differed slightly between sites. No effort was made to collect statistically random samples because the assumption was made that ^{222}Rn emanation *fraction* was not dependent on the concentration of parent ^{226}Ra. Rather, we concentrated on sampling soils that were highly contaminated to facilitate laboratory analysis, and on pipe scale that was not so contaminated as to present problems in meeting shipping regulations.

Pipe scale – In general, pipe scale was collected wherever and by whatever means possible. At the sites in Oklahoma and Texas, a sledge hammer was used to dislodge scale from the interior of pipe segments clogged with contaminated scale. In Michigan, a few pipe casings were found with thin deposits of NORM-contaminated scale on the exterior surfaces. This scale was sampled by peeling the scale from the casing. At the Kentucky pipe cleaning site, scale was collected from 55-gallon drums of scale resulting from the cleaning operation. As such, it was impossible to associate a given sample with a single pipe for scale collected in Kentucky. The differing techniques resulted in different physical characteristics of the pipe scale samples, depending on the site of origin. Each sample was placed in a 1 L nalgene bottle.

Soil -- Soil samples were collected using a post hole digger or trenching tool at locations where gamma surveys indicated the presence of elevated NORM levels. Surface gamma exposure rates were measured and recorded at each sampling location. Surface soil samples included the top 15 cm of soil. Care was taken to collect a core of uniform diameter to a depth of 15 cm. This material was placed in a plastic tray, homogenized, and a subsample was placed in a 1 L nalgene bottle. All sample collection materials were cleaned between samples to prevent sample cross contamination. At the Wyoming site, some "subsurface" soil samples were collected for depth characterization purposes from the second 15 cm depth using the same holes. Sediment samples were collected in both Wyoming and Kentucky using a shovel.

2.3 Sample Analysis: All samples were analyzed for ^{226}Ra concentration and ^{222}Rn emanation fraction. These analyses were conducted by Energy Laboratories Inc. of Casper, Wyoming with the exception of the samples collected from the site in Texas, which were analyzed using similar techniques by the Radon Laboratory of the Department of Energy Grand Junction Project Office using a slightly different technique.

The general methodology employed in the measurement of ^{222}Rn emanation fraction involved the flushing of all free gaseous ^{222}Rn from an aliquot of the 1 L sample and the subsequent measurement of the ingrowth of the emanating fraction of the total ^{222}Rn in the sample by gamma spectroscopy. Spectral gamma measurements of the 0.352 MeV peak from ^{214}Pb and the 0.609 MeV and 1.764 MeV peaks from ^{214}Bi were obtained at two different times during the ingrowth period. The emanation fraction was determined based on the theoretical ingrowth curve. Fig. 1 shows the theoretical ^{222}Rn ingrowth curve. The sample activities at times t_1 and t_2 (I_1 and I_2) are described by Equations 1 and 2 below.

$$I_1 = I_o + N\left(1 - e^{-\lambda t_1}\right) \quad (1)$$

$$I_2 = I_o + N\left(1 - e^{-\lambda t_2}\right) \quad (2)$$

Where:
I_1 = activity at time t_1
I_2 = activity at time t_2
I_0 = bound ^{222}Rn activity at time t_0
N = free, or emanating ^{222}Rn activity at radioactive equilibrium
λ = ^{222}Rn decay constant (s^{-1})

These two equations can be solved simultaneously for the unknown quantities I_0 and N. Substituting A for $(1-e^{-\lambda t_1})$ and B for $(1-e^{-\lambda t_2})$ simplifies the equations. The solutions are given in Equations 3 and 4, and the emanation fraction F is computed from Equation 5.

$$N = \frac{(I_1 - I_2)}{A - B}, \tag{3}$$

$$I_o = \frac{I_2 A - I_1 B}{A - B} \tag{4}$$

$$F = \frac{N}{N + I_o} 1 \tag{5}$$

It is not necessary to determine the actual sample activities (I_1 and I_2) at times t_1 and t_2, as the net count rates (C_1 and C_2) observed at t_1 and t_2 are proportional to the activities (I_1 and I_2) through a calibration constant, which cancels out when the final ratio is taken in Equation 5. Thus C_1 and C_2 may be substituted for I_1 and I_2.

The ^{222}Rn emanation fraction of most granular materials is dependent upon the grain size (surface to volume ratio) as well as the moisture content of the sample (Colle' et al. 1981, Tanner 1980). Because of this concern, the samples prepared for Rn emanation fraction measurement were not crushed or otherwise further reduced in size beyond that which occurred during the field sampling until the emanation fraction measurements were completed. It was believed that the method of obtaining the scale samples used in this investigation would produce a grain size distribution representative of scale materials removed from tubing and pipe by the "rattling" process commonly used in the past. The emanation fractions reported here are not intended to be representative of those belonging to scale materials removed by the under-reaming process, which is the process currently used at most pipe cleaning facilities.

The initial Rn emanation measurements for samples collected at the site in Texas were conducted by the U.S. Department of Energy Radon Laboratory in Grand Junction, Colorado. Their procedure called for representative 0.4 L aliquots of the 1 L scale samples to be obtained by the cone-and-quarter method. Each aliquot was placed as a thin layer in a flushing chamber constructed from a 70 cm length of 4-inch PVC pipe. A small laboratory air pump was used to draw conditioned air through the flushing chambers at a flow rate of approximately 1 L min^{-1}. Previous experience with uranium mill tailings materials indicated that using room air for flushing results in significant drying

of the sample. In order to avoid this problem, a humidifying system was employed to condition the air stream drawn into the flushing chamber to 98% relative humidity, and maintain it at the same temperature as the flushing chamber. By maintaining the air stream close to the saturation moisture content, it was anticipated that the intergranular moisture would remain constant in the sample.

Weight gains were, however, observed in all of the samples following removal from the flushing chambers. The increases were probably the result of iron oxide minerals taking up hydration waters from the saturated atmosphere. There is no question that the measurement process affected the moisture content of the samples, relative to the "as-collected" condition. It can be argued, however, that the saturated air of the measurement condition closely approximates the moisture conditions that exist in most soils.

The spectral gamma measurements were obtained with a high purity, planer germanium detector used with a personal computer based multichannel analyzer. Two spectra were collected for each sample at two different times, (t_1, t_2) during the ingrowth period. Samples were counted for 1500 s. Net peak areas were obtained for three different regions of interest comprised of the 0.352, 0.609, and 1.764 MeV lines for each count. The sum of the net peak areas from these three regions of interest are proportional to the sample activity at times t_1 and t_2. Substitution of these values into Equations 3, 4, and 5 yields the ^{222}Rn emanation fraction.

The same 0.4 L aliquot used in the emanation fraction measurements was used as the starting sample material for the ^{226}Ra and ^{228}Ra analyses. The 0.4 L aliquots were first dried at 110°C and then crushed to a sieve size of 80 mesh and thoroughly blended. A 100 g aliquot was then extracted and placed in a metal container, sealed and allowed to sit 21 days for Rn progeny ingrowth (Figure 2). Each sample was counted on a high purity germanium detector (HPGE) using the 0.609 MeV ^{214}Bi photopeak for ^{226}Ra and 2.614 MeV ^{208}Tl photopeak for ^{228}Ra. Samples were corrected for density differences between the sample matrix and the calibration standards.

All samples collected subsequent to those collected in Texas were analyzed for ^{228}Ra concentration and ^{222}Rn emanation by Energy Laboratories Inc. of Casper, Wyoming using a slightly different procedure. As with the Texas samples, no crushing or grinding of the samples was performed prior to measuring ^{222}Rn emanation. However, all samples were oven dried and the moisture content was measured and recorded prior to analysis. We found it necessary to dry these samples because the

sediment samples and some soil samples were saturated, making them difficult to work with in the laboratory. Furthermore, some degree of drying was expected of all samples between collection and analysis. It was therefore determined that all samples were to be oven dried prior to measuring ^{222}Rn emanation so as to provide a consistent sample analysis protocol for all remaining samples.

3. RESULTS AND DISCUSSION

Summaries of the ^{226}Ra concentration and ^{222}Rn emanation fraction data for all sites are provided in Tables 1 (pipe scale) and 2 (soil). For comparison purposes, data from the analysis of 11 uranium mill tailings samples using identical analytical techniques is also provided both tables. More comprehensive data summaries for each site are provided in Appendix A, including other analytical results such as concentrations of ^{228}Ra and ^{40}K and the counting errors (precision) associated with each sample.

3.1 Pipe Scale - Elevated concentrations of ^{226}Ra were found in all pipe scale samples collected in Oklahoma, Michigan, Kentucky, and Texas. This was expected, because only pipes exhibiting elevated gamma exposure readings were sampled. Mean ^{226}Ra concentrations were lower in scale from the site in Michigan (416 pCi g-1) than samples from the other four sites. This difference could be due to a lower Ra/Ba ratio in Michigan formation waters. Alternatively, the lower concentrations found in Michigan scale may be the result of slightly different scale formation processes at this site resulting in the formation of scale on the exterior surfaces of the casing material, or to a lower concentration of the source ^{228}Ra. Radium concentrations in the 11 mill tailings samples analyzed averaged 424 pCi g^{-1}, or about what was found in the Michigan pipe scale samples.

Table 1. Data summary for ^{222}Rn emanation fraction and ^{226}Ra concentration in pipe scale samples collected from four sites (mean ± 1 standard deviation).

STATE	n	^{226}Ra Concentration (pCi g^{-1})	^{222}Rn Emanation Fraction
Oklahoma	10	2056 ± 780	0.087 ± 0.013
Michigan	8	416 ± 246	0.138 ± 0.020
Kentucky #2	10	1915 ± 288	0.137 ± 0.097
Texas	20	1674 ± 870	0.037 ± 0.011
Uranium Mill Tailings	11	424 ± 45.3	0.153 ± 0.019

As shown in Table 1, mean ^{222}Rn emanation fraction for scale ranged from less than four percent in Texas to almost 14 percent in Michigan and Kentucky. Emanation fractions for the 11 uranium mill tailings samples analyzed averaged over 15%, although the range was less than that found in the pipe scale data sets (Figure 3). Mean ^{222}Rn emanation fractions from each of the four pipe scale sample sets were significantly different than that of the uranium mill tailings samples analyzed ($p \leq 0.01$).

Based on the concentrations reported for the pipe scale samples used in this study, disposal of scaled pipes would be regulated in those states that have enacted NORM regulations. However, Rn emanation fractions averaged less for these samples than for mill tailings, especially for the sites in Texas and Oklahoma. This is considerably below the published range for uranium mill tailings of 0.1 to 0.3 (Rogers et al., 1984).

The variability between sites of ^{222}Rn emanation fraction for pipe scale may be the result of different sample collection methods. Scale from Texas was collected from pipes that were recently taken out of service. The scale samples from these pipes was collected in fairly large "chunks" as removed from the pipe. These samples showed the lowest mean emanation fraction. Oklahoma scale samples were also from pipe clogged with barite scale, but in this case the pipes sampled were found on the ground surface and were partially rusted through. As stated above, the Michigan scale samples were collected from a fine barite deposit on the external surface of casing pipe. Finally, the Kentucky scale was collected from a drum of NORM scale waste at a pipe cleaning facility. It is likely that much of the variability observed between sites was simply due to the differences in the mean particle size of the sample.

We should reiterate that the samples collected in Texas were analyzed using a somewhat different analytical technique from that applied to samples collected elsewhere. For the Texas samples, an effort was made to maintain the moisture content of each sample as it was when it was collected. In contrast, samples collected at all other sites were first dried before analysis. This difference in analytical techniques could partially explain the lower emanation fractions observed for samples from the Texas site.

3.2 Soil – Concentrations of ^{226}Ra in soils collected during this study were generally less than those found in pipe scale, but substantial variability was observed both between and within sampling sites (Table 2, Figure 4). All soil samples collected were

substantially higher ^{226}Ra concentrations than local background soils, which were generally in agreement with published ranges for natural soils of from about 0.5 to 2.0 pCi g^{-1} (Klement Jr., 1982).

Table 2. Data summary for surface sol samples for six sites (mean ± 1 standard deviation.) Background soil samples designated as "Bkg".

STATE	n	^{226}Ra Concentration (pCi g-1)	^{222}Rn Emanation Fraction
Oklahoma	10	335 ± 750	0.207 ± 0.101
Oklahoma (Bkg)	3	1.8 ± 0.78	0.258 ± 0.042
Michigan	9	191 ± 170	0.130 ± 0.079
Michigan (Bkg)	3	< 0.1	0.036 ± 0.048
Kentucky #1	11	368 ± 577	0.133 ± 0.089
Kentucky #1 (Bkg)	3	< 0.1	0.072 ± 0.062
Kentucky #2	6	62.2 ± 44.5	0.148 ± 0.054
Illinois	10	9.06 ± 7.09	0.092 ± 0.099
Wyoming*	14	6.97 ± 4.67	0.104 ± 0.045
Uranium Mill Tailings	11	424 ± 45.3	0.153 ± 0.019

* Includes surface soil, subsurface soil, and sediment samples

Mean ^{222}Rn emanation fraction for contaminated soil samples ranged from nine percent in Illinois to 21 percent in Oklahoma (Table 2). Contrary to what was observed with pipe scale, ^{222}Rn emanation values for soils sampled as part of this effort showed substantial overlap with those of uranium mill tailings, although emanation from the data sets from each site were statistically different from mill tailings ($p \leq 0.01$).

Differences in mean emanation fraction between sites in pipe scale samples may be due to different analytical techniques for the samples collected in Texas in comparison with the other sites. However, all soil samples reported here were subject to identical sample collection and analytical techniques. The variability observed in the soil data was more likely due to differences in the manner in which the NORM-contaminated material was deposited in the soil. Some samples may have contained large particles of barite scale, while other soils may have become contaminated from produced waters discharged directly to the ground surface. In order for a Rn atom to be released from a material in which it is contained, it must first be transported to the surface of that material. In granular materials, such as uranium mill tailings, the surface of interest is the grain surface, and as a practical matter the grain is usually bounded by a void or pore space in the bulk material.

An important mechanism for the transport of Rn atoms is the so-called direct recoil mechanism. When a ^{226}Ra atom decays by the emission of a 5.3 MeV alpha particle, approximately 86 keV of energy is imparted to the parent nucleus. This recoil energy drives the newly formed Rn atom in the opposite direction as the alpha particle. As the Rn atom travels along its recoil path, it continues to lose energy until it finally stops. The distance traveled is dependent upon the material through which it travels. For minerals with common densities this range is 20-70 nm (Tanner 1980). If the medium is water the range is approximately 0.1 μm, whereas in air the range is about 60 μm (Tanner 1980). Thus, if the parent Ra atom is located substantially greater than 70 nm from the grain surface, recoil of the Rn atom will not result in its escape from the grain, and it will not contribute to the emanated fraction. If, on the other hand, the original Ra atom lies within the recoil range of the grain boundary, and the recoil path terminates within the pore volume, then the atom is free to migrate away as gaseous Rn.

Another possibility for the recoil path is for it to cross the grain boundary, but terminate in an adjacent grain. In traveling into the adjacent grain, the atom produced an ionization damage trail. Because of the ionization damage, the Rn atom is able to diffuse back out of the grain much more readily than if there were no damage. This is referred to as the indirect-recoil mechanism.

Because the surface area to volume ratio is dependent upon grain size, the size and distribution of grains within granular materials can have a large impact on the Rn emanation fraction. The distribution of the Ra may also play a significant role in determining the emanation fraction. For many types of uranium ores deposited in

sandstone, the uranium, and consequently the Ra is located in a relatively thin coating of secondary minerals on the clastic grains. This is one reason for the relatively high emanation fractions exhibited by many uranium mill tailings.

In contrast to granular materials, NORM pipe scales are commonly deposited as a massive form of the scale minerals, typically barite. Although these scale deposits exhibit some porosity (at crystal boundaries and as fracture porosity), it is significantly lower than for a granular material such as uranium mill tailings. Additionally, the Ra distribution tends to be more uniform throughout the bulk volume of the scale, which significantly reduces the fraction of parent Ra atoms that are within the recoil range of pore features or surfaces of the scale material. Thus estimates of Rn emanation fractions for NORM scale materials are relatively low. Nielson et al. (1988) and Baird et al. (1990) estimate approximately 5% for emanation fractions for scale materials. In contrast, estimates for the emanation fraction of NORM contaminated sludges are four to five times higher because their physical properties more closely approximate a granular material than the massive scales.

The ^{222}Rn emanation fractions presented here likely represent more appropriate values to use in an assessment of NORM-contaminated scale and soils. However, these data are of limited scope in that they represent only a few selected location. More measurements from a wide variety of locations and operating conditions are needed to develop distributions of emanation fractions, that are appropriate for a risk assessment of NORM-contaminated scale material or soils.

4. CONCLUSIONS

These data show that while Ra concentrations in pipe scale may be similar to those observed in uranium mill tailings and other materials regulated for their ^{222}Rn release potential, the ^{222}Rn emanation fraction for pipe scale is generally lower than for typical mill tailings. This difference is likely due primarily to the less porous structure of pipe scale which serves to restrict the rate at which ^{222}Rn is released from the material. Furthermore, the ^{222}Rn flux rates measured from whole pipes in the Texas portion of this study indicate that release from undisturbed pipe comparable to those from a few square meters of uncontaminated soil (Rood et al., 1998).

As for soils and other NORM-contaminated media, the use of mill tailings values for estimating Rn release may be more reasonable than for pipe scale. Overall, the current study suggests that Rn release is dependent to a large degree on the physical characteristics of the medium containing the NORM radionuclides. This implies a lower potential for release of ^{222}Rn from barite scales contaminated with ^{226}Ra than for other materials currently regulated for their Ra content. These differences should be considered when determining waste disposal options for various NORM-contaminated media.

Acknowledgements – The authors wish to thank Mr. John Ford of the U.S. Department of Energy, National Petroleum Technology Office and Mr. Michael Loudermilk of the American Petroleum Institute for their cooperation. We would also like to acknowledge the help of Dr. James Otton and Dr. Robert Zielinski of the U.S. Geological Survey and various individuals at each sampling site visited, especially Mr. Shawn Barndt.

5. REFERENCES

Baird, R.D., G.B. Merrell, R.B. Klein, V.C. Rogers, and K.K. Nielson. 1990. Management and disposal alternatives for NORM wastes in oil production and gas plant equipment. Rogers and Associates Engineering Corporation, RAE-8837/2-2.

Bassignani, A., G. DiLuise, and A. Fenzi. 1991. Radioactive scales in oils and gas production centers. *In*: Proceedings of the Society of Petroleum Engineers First International Conference on Health, Safety, and Environment. The Hague, Netherlands, November 10–14; 1991. pp. 527–537.

Bernhardt, D.E., D.H. Owen, V.C. Rogers. 1996. Assessment of NORM in pipe from oil and gas production. *In:* Proceedings of the 29th Midyear Topical Meeting of the Health Physics Society, January 7–10. Scottsdale, Arizona. pp. 133–138.

Cameron, F.X. 1996. The odyssey of the good ship NORM: The search for a regulator safe harbor. *In:* Proceedings of the 29th Midyear Topical Meeting of the Health Physics Society, January 7–10. Scottsdale, Arizona. pp 13–18.

Colle`, R.; R.J. Rubin, L.I. Knab, and J.M.R. Hutchinson. 1981. Radon transport through and exhalation from building materials: a review and assessment. Washington DC; U.S. Department of Commerce, National Bureau of Standards; NBS Technical Note 1139:1–97.

EPA (U.S. Environmental Protection Agency). 1991. Draft diffuse NORM waste characterization and preliminary risk assessment. Washington, D.C.: Air and Radiation Report ANR-460.

EPA (U.S. Environmental Protection Agency). 1993. Draft Diffuse NORM wastes – Waste Characterization and Preliminary Risk Assessment. Office of Radiation and Indoor Air, Washington, D.C.

Klement Jr., A.W. (ed.). 1982. CRC Handbook of Environmental Radiation. CRC Press Inc., Boca Raton, FL.

NAS (National Academy of Sciences). 1988. Health risks of radon and other internally deposited alpha emitters. BEIR IV, National Research Council, Academy Press, Washington DC.

Nielson, K.K., V.C. Rogers, and K.K. Bollenbacher. 1988. Safety analysis for the safe disposal of naturally occurring radioactive materials in Texas. Salt Lake City, Utah: Rogers and Associates Engineering Corporation Report RAE-8818-1.

Otto, G.H. 1989. A national survey on naturally occurring radioactive materials (NORM) in petroleum producing and gas processing facilities. Report to the American Petroleum Institute, Washington, D.C. 265 p.

Raabe, O.G. 1996. Studies of the solubility of naturally-occurring radionuclides in petroleum pipe scale. *In:* Proceedings of the 29th Midyear Topical Meeting of the Health Physics Society, January 7–10: Scottsdale, Arizona. pp 121–128.

Rogers, V.C., K.K. Nielson, and R. Kalkwarf. 1984. *Radon Attenuation Handbook for Uranium Mill Tailings Cover Design.* NUREG/CR-3533. U.S. Nuclear Regulatory Commission, Washington DC, April, 1984.

Rood, A.S., White, G.J., and Kendrick, D.T. 1998. Measurement of 222Rn flux, 222Rn emanation, and 226,228 Ra concentration from injection will pipe scale. Health Physics 75:187-192.

Smith, A.L. 1987. Radioactive scale formation. Journal of Petroleum Technology 39:697–706.

Smith, K.P., D. L. Blunt, and J.J. Arnish. 1998. Potential radiological doses associated with the disposal of petroleum industry NORM via landspreading. Argonne National Laboratory. U.S. Department of Energy National Petroleum Technology Office publication DOE/BC/W-31-109-ENG-38-5 (DE98000550).

Snavely, E.S. 1989. Radionuclides in produced water - a literature review. Washington, D.C.: American Petroleum Institute Publication No. 5404, 1–85.

Tanner, A.B. 1980. Radon migration in the ground: A supplementary review. *In:* T.F. Gesell and W.M. Lowder (eds.), Natural radiation environment III, Volume 1. U.S. Department of Energy Report CONF-780422: 5–56.

White, G.J. and A.S. Rood. 1999. Characterization of the National Petroleum Reserve No. 3 (NPR-3) for naturally occurring radioactive material (NORM). Lockheed Martin Idaho Technology Co., Idaho National Engineering Laboratory External Report INEEL/EXT-1998-608. January, 1999.

Wilson, A.J. and L.M. Scott. 1992. Characterization of radioactive petroleum piping scale and evaluation of subsequent land contamination. Health Physics 63:681–685.

Figure 1. Simplified decay series for ^{226}Ra and ^{228}Ra showing half lives and decay products important to analysis by gamma spectroscopy.

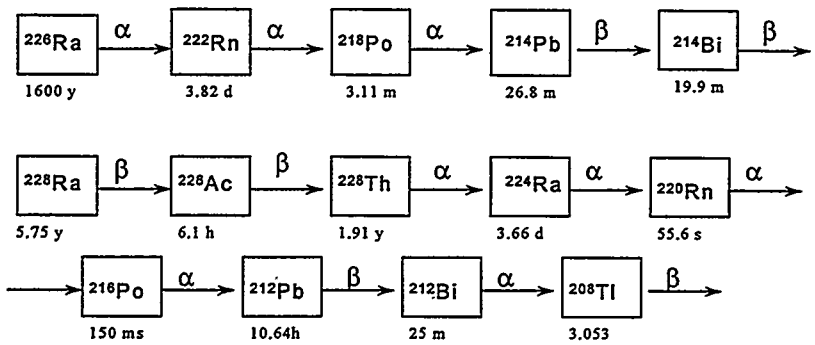

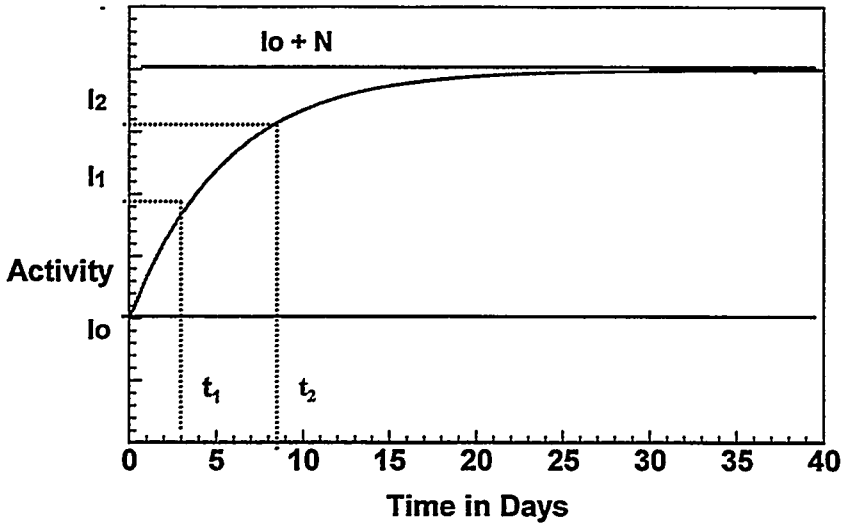

Figure 2. Theoretical radon ingrowth curve defining I_0, I_1, and I_2.

Figure 3. Pipe Scale ^{222}Rn Emanation Ranges

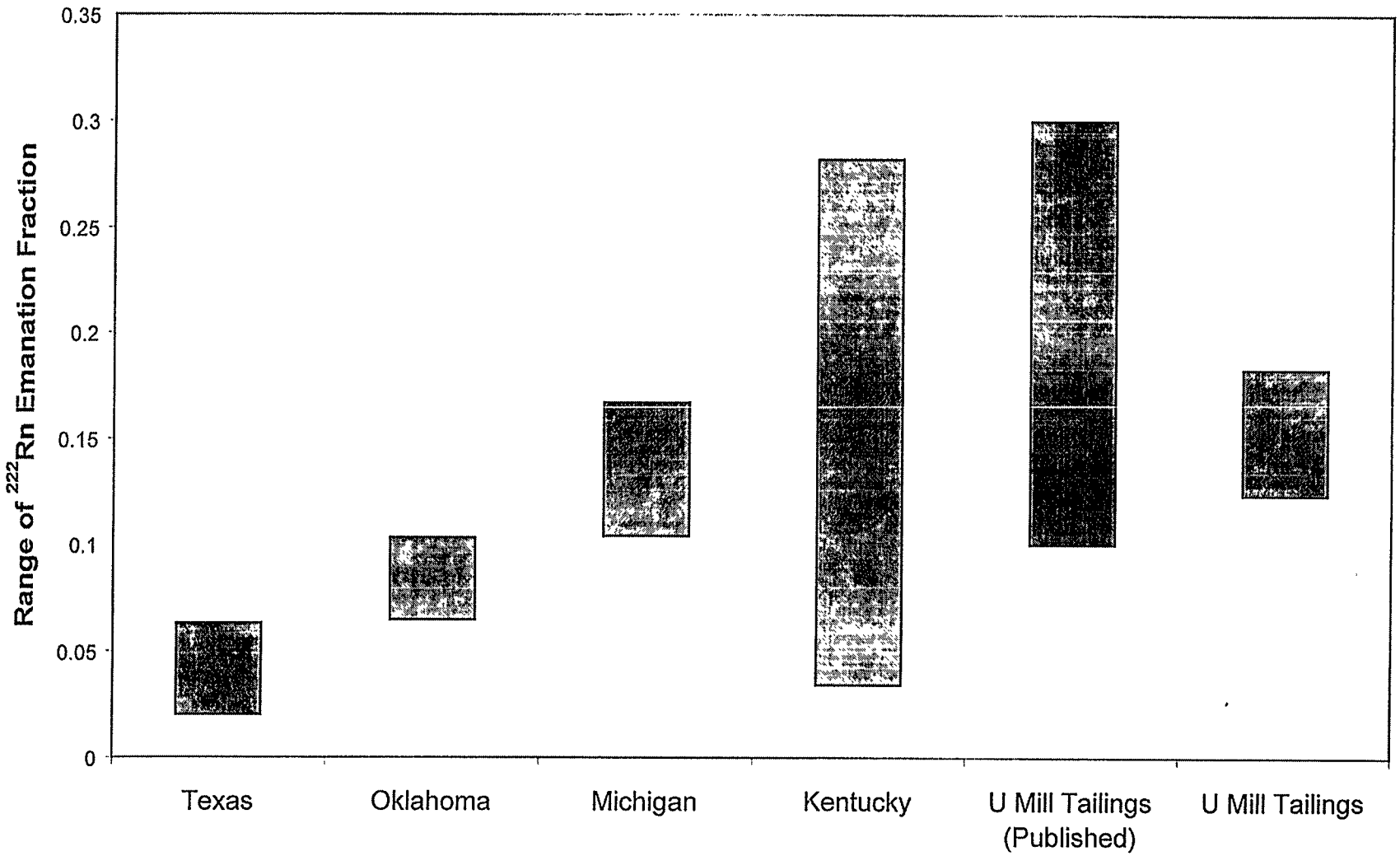

Figure 4. Summary of Soil ^{222}Rn Emanation Ranges

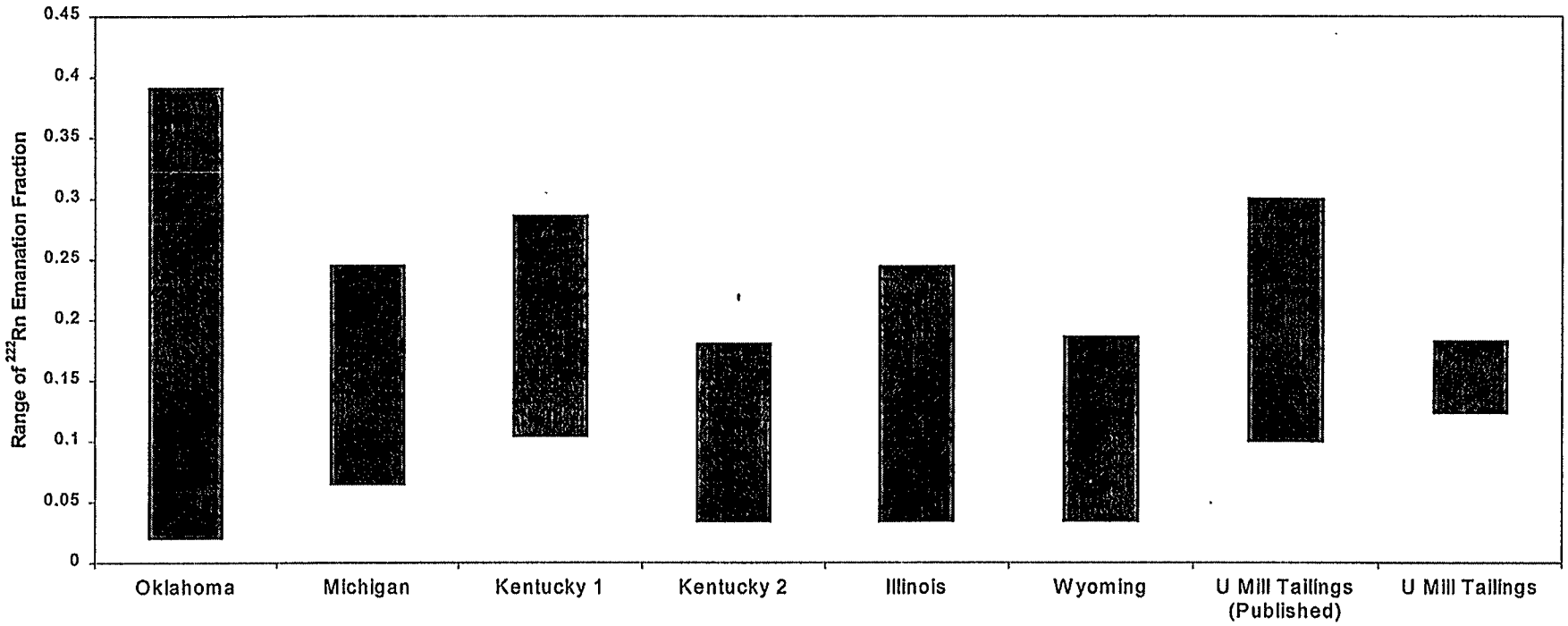

APPENDIX 1

SUMMARY OF ANALYTICAL DATA BY SITE

Table A-1. Radium concentration and ^{222}Rn emanation fraction data for pipe scale samples collected from 20 injection pipes at a site in Texas (Rood et al., 1998).

Sample Number	Sample Type	^{226}Ra Conc. (pCi/g)	^{226}Ra Count Error* (pCi/g)	^{228}Ra Conc. (pCi/g)	^{228}Ra Count Error* (pCi/g)	^{40}K Conc. (pCi/g)	^{40}K Count Error* (pCi/g)	^{222}Rn Emanation Fraction	Drying Loss (%)
PF002SC001	Pipe scale	895	89	1508	152	149	41	0.063	6.7
PF002SC002	Pipe scale	2150	206	2955	290	305	72	0.040	10.7
PF002SC003	Pipe scale	1978	197	2992	302	229	54	0.027	5.5
PF002SC004	Pipe scale	1941	180	2789	268	274	60	0.026	5.3
PF002SC005	Pipe scale	2156	198	2999	285	306	77	0.030	20.7
PF002SC006	Pipe scale	398	37	513	49	<10.9	N/A	0.054	9
PF002SC007	Pipe scale	425	41	534	53	60	22	0.052	9.4
PF002SC008	Pipe scale	2748	269	4064	404	311	73	0.030	4.9
PF002SC009	Pipe scale	1042	102	1623	162	158	34	0.032	6.2
PF002SC010	Pipe scale	2322	216	3619	347	331	63	0.020	5
PF002SC011	Pipe scale	2224	211	3818	372	321	54	0.039	5.8
PF002SC012	Pipe scale	2629	249	4039	393	315	103	0.027	4.1
PF002SC013	Pipe scale	717	66	1313	125	<14.2	N/A	0.037	7.3
PF002SC014	Pipe scale	2338	217	3605	346	333	69	0.031	5.5
PF002SC015	Pipe scale	2762	276	4050	409	323	55	0.038	5.2
PF002SC016	Pipe scale	707	65	1295	123	<16.3	N/A	0.035	8.8
PF002SC017	Pipe scale	2437	231	3974	387	<28.5	N/A	0.030	4.2
PF002SC018	Pipe scale	658	61	1364	130	143	32	0.034	6.5
PF002SC019	Pipe scale	2257	212	3359	325	320	66	0.033	4.6
PF002SC020	Pipe scale	592	55	1503	143	139	35	0.057	6.5
	MEAN	1669	159	2596	253	251	57	0.037	7.1
	STD	865	83	1249	123	90	21	0.011	3.7

Table A-2. Radium concentration and ^{222}Rn emanation fraction data for pipe scale samples collecte from soil and sediment samples collected at the NPR-3 site in central Wyoming (White et al., 1999)

Sample Number	Sample Type	^{226}Ra Conc. (pCi g^{-1})	^{226}Ra Count Error (pCi g^{-1})	^{228}Ra Conc. (pCi g^{-1})	^{228}Ra Count Error (pCi g^{-1})	^{40}K Conc. (pCi g^{-1})	^{40}K Count Error (pCi g^{-1})	^{222}Rn emanatio fraction
TD-21-003	Surface soil	2.3	0.3	2.1	0.6	18.3	2.1	0.107
TD-21-004	Subsurface soil	1.8	0.3	1.9	0.5	20.9	2.4	0.165
TD-21-006	Surface soil	6.2	0.5	4.3	1.7	21.5	2.3	0.142
TD-21-014	Subsurface soil	4.9	0.5	3.0	1.3	20.3	2.2	0.061
TD-21-020	Surface soil	8.3	0.5	3.3	0.7	16.3	2.5	0.087
TD-21-023	Surface soil	10.5	0.7	4.5	0.8	17.8	2.1	0.143
TD-21-029	Surface soil	6.4	0.2	3.2	0.5	18.5	2.7	0.131
TD-21-038	Subsurface soil	3.8	0.4	2.0	0.4	19.8	2.2	0.042
TD-21-039	Surface soil	6.5	0.5	4.6	1.9	19.5	2.3	0.110
TD-21-047	Surface soil	19.9	0.9	5.5	1.1	16.2	2.0	0.056
TD-21-048	Subsurface soil	4.1	0.4	2.0	0.4	22.2	2.4	0.077
TD-21-058	Surface soil	10.8	0.6	<0.8	--	19.1	2.2	0.069
TD-02-059	Sediment	3.4	0.3	<0.8	--	13.4	1.6	0.078
TD-02-067	Sediment	8.7	0.7	3.7	0.8	24.3	2.7	0.194
	MEAN	6.97	0.48	3.34	0.89	19.2	2.26	0.104
	STD	4.68	0.19	1.21	0.50	2.76	0.28	0.045

Note: In this study, ^{222}Rn emanation measurements were made on a random subset of all samples. No background samples were selected during this process.

Table A-3. Radium concentration and ^{222}Rn emanation fraction data for soil, pipe scale, and other miscellaneous samples collected from sites in Oklahoma.

Sample Number	Sample Type	^{226}Ra Conc. (pCi/g)	^{226}Ra Count Error (pCi/g)	^{228}Ra Conc. (pCi/g)	^{228}Ra Count Error (pCi/g)	^{40}K Conc. (pCi/g)	^{40}K Count Error (pCi/g)	^{222}Rn Emanation Fraction	Percent Moisture
OK01SS	surface soil	363	0.4	<0.1	–	<0.1	–	0.139	4.7
OK02SS	surface soil	7.3	0.5	<0.1	–	<0.1	–	0.144	2.3
OK03SS	surface soil	0.7	0.2	1.9	0.3	17.3	2.2	0.441	8.8
OK04SS	surface soil	14.9	2.9	<0.1	–	<0.1	–	0.249	4.3
OK05SS	surface soil	34	1.4	<0.1	–	15.3	2.4	0.218	4.6
OK06SS	surface soil	280	7.8	<1.0	–	<0.1	–	0.160	9.8
OK07SS	surface soil	150	4.6	<0.1	–	26.1	9.1	0.223	9
OK08SS	surface soil	2440	58	<1.0	–	<0.1	–	0.070	8.4
OK09SS	surface soil	35.6	1.3	<0.1	–	20.5	2.5	0.260	3.4
OK10SS	surface soil	20.8	1.1	<0.1	–	18.2	2.3	0.268	5.6
	MEAN	335	7.8	–	–	19.5	3.7	0.217	6.1
	STD	751	17.8	–	–	4.1	3.0	0.101	2.7
OK11BS	bkg soil	2.7	0.3	1.3	0.3	<0.1	–	0.306	13.6
OK12BS	bkg soil	1.4	0.2	2	0.3	<0.1	–	0.240	10.2
OK13BS	bkg soil	1.3	0.2	1.3	0.3	<0.1	–	0.230	10.9
	MEAN	1.8	0.23	1.5	0.3	–	–	0.259	11.6
	STD	0.78	0.06	0.4	0	–	–	0.042	1.8
OK14PS	pipe scale	1540	37.2	<1.0	–	<0.1	–	0.086	6.3
OK15PS	pipe scale	1560	37.3	<0.1	–	<0.1	–	0.080	3
OK16PS	pipe scale	1780	43.2	<0.1	–	<0.1	–	0.076	10.7
OK17PS	pipe scale	1800	46	<0.1	–	<0.1	–	0.103	5.3
OK18PS	pipe scale	1970	46.8	<0.1	–	<0.1	–	0.095	5.3
OK19PS	pipe scale	1650	40.2	<0.1	–	<0.1	–	0.079	8.6
OK20PS	pipe scale	1460	37.7	<0.1	–	<0.1	–	0.084	9.1
OK21PS	pipe scale	1800	43.7	12.1	3.5	15.5	2.2	0.065	5.5
OK22PS	pipe scale	3670	87	<1.0	–	<0.1	–	0.101	2.8
OK23PS	pipe scale	3330	79.1	<1.0	–	<0.1	–	0.103	4.2
	MEAN	2056	49.8	–	–	–	–	0.087	6.08
	STD	780	18.0	–	–	–	–	0.013	2.63
OK24TD	tank dis.	710	17.4	26.3	3.3	<0.1	–	0.078	4.9
OK25TD	tank dis.	895	22.8	36.5	7	<0.1	–	0.099	6.4
OK26TD	tank dis.	46.1	1.9	3:2	1.2	<0.1	–	0.113	8.7
OK27TD	tank dis.	38.9	1.8	<0.1		<0.1	–	0.158	6.8
OK28TD	tank dis.	119	3.3	7.7	1.9	<0.1	–	0.106	10.2
	MEAN	362	9.4	18.4	3.4	–	–	0.111	7.4
	STD	409	9.9	15.7	2.6	–	–	0.029	2.1
OK29RF	road fill	28.8	1.3	<0.1	–	<0.1	–	0.168	16.5
OK30SL	sludge	52.8	2.4	10.3	1.9	<0.1	–	0.159	7.7
OK31SL	sludge	42.6	2.1	4.6	0.4	<0.1	–	0.231	9.2
OK32TB	tank botms.	1780	42.2	<1.0	–	<0.1	–	0.107	10.2
OK33RF	road fill	2830	67.2	<1.0	–	<0.1	–	0.132	12
	MEAN	947	23.0	–	–	–	–	0.159	11.1
	STD	1294	30.2	–	–	–	–	0.047	3.4

Table A-4. Radium concentration and ^{222}Rn emanation fraction data for soil and pipe scale samples collected from sites in Michigan.

Sample Number	Sample Type	^{226}Ra Conc. (pCi/g)	^{226}Ra Count Error (pCi/g)	^{228}Ra Conc. (pCi/g)	^{228}Ra Count Error (pCi/g)	^{40}K Conc. (pCi/g)	^{40}K Count Error (pCi/g)	^{222}Rn Emanation	Percent Moisture
MI01SS	Soil	397	10.4	<0.1	--	9.2	3.7	0.00	2.4
MI02SS	Soil	150	4.4	<0.1	--	<0.1	--	0.07	2.3
MI03SS	Soil	32	1.2	<0.1	--	15.3	1.9	0.02	3.2
MI04SS	Soil	185	5.7	<0.1	--	31.1	10.5	0.21	2.0
MI05SS	Soil	93	3.1	<0.1	--	19.4	6.2	0.15	2.6
MI06SS	Soil	65	2.1	<0.1	--	21.2	2.2	0.19	2.1
MI21MS	Soil	545	13.8	7.7	2.3	<0.1	--	0.20	1.3
MI22MS	Soil	96	4.2	3.6	1.4	23.0	6.0	0.17	1.5
MI23MS	Soil	155	4.4	<0.1	--	40.5	15.0	0.16	3.1
	MEAN	191					--	0.10	
	STD	170					--	0.08	
MI11SC	Pipe scale	631	16.0	93.0	5.2	<0.1	--	0.15	0.9
MI12SC	Pipe scale	603	15.9	83.8	7.1	<0.1	--	0.14	0.8
MI13SC	Pipe scale	282	8.4	36.6	2.3	<0.1	--	0.10	0.5
MI14SC	Pipe scale	171	5.3	36.4	2.3	<0.1	--	0.12	1.0
MI15SC	Pipe scale	477	49.5	69.2	5.3	<0.1	--	0.17	1.0
MI16SC	Pipe scale	803	19.7	112	5.7	<0.1	--	0.13	1.0
MI17SC	Pipe scale	174	5.4	44.6	5.2	<0.1	--	0.15	0.9
MI18SC	Pipe scale	188	5.8	50.5	4.8	<0.1	--	0.14	1.0
	MEAN	416					--	0.14	
	STD	246					--	0.02	
MI31BS	Bkg soil	<0.1	--	<0.1	--	16.4	2.0	0.09	1.9
MI32BS	Bkg soil	<0.1	--	<0.1	--	15.3	1.9	0.02	1.7
MI33BS	Bkg soil	<0.1	--	<0.1	--	12.1	1.9	0.00	2.0
	MEAN	<0.1	--	--	--		--	0.04	
	STD	NA	--	--	--		--	0.05	

Table A-5. Radium concentration and ^{222}Rn emanation fraction data for soil and sediment samples collected from the first site sampled in Kentucky.

Sample Number	Sample Type	^{226}Ra Conc. (pCi/g)	^{226}Ra Count Error (pCi/g)	^{228}Ra Conc. (pCi/g)	^{228}Ra Count Error (pCi/g)	^{40}K Conc. (pCi/g)	^{40}K Count Error (pCi/g)	^{222}Rn Emanation Fraction	Percent Moisture
1KY01SS	Soil	313	8.7	3.3	3.3	<0.1	--	0.036	27.8
1KY02SS	Soil	28	1.2	<0.1	--	8.2	2.4	0.161	19.2
1KY03SS	Soil	22	1.2	3.8	0.4	17.8	2.3	0.207	15.6
1KY04SS	Soil	66	2.4	7.7	2.6	22.9	4.3	0.099	19.4
1KY05SS	Soil	57	2.3	3.9	0.9	22.8	4.6	0.108	18.8
1KY06SS	Soil	28	1.4	<0.1	--	11.6	1.9	0.210	7.0
1KY07SS	Soil	933	24.8	94.7	7.5	<0.1	--	0.053	23.8
1KY08SS	Soil	1908	47.0	7.8	7.8	<0.1	--	0.077	20.7
1KY09SS	Soil	250	6.9	9.3	1.4	46.1	16.5	0.249	10.9
1KY10SS	Soil	88	2.9	4.2	1.0	25.8	8.4	0.000	25.4
1KY27SS	Soil	355	10.7	68.4	12.1	<0.1	--	0.259	20.8
	MEAN	368	10.0	22.5	4.1			0.133	
	STD	577	14.1	34.1	4.1			0.089	
1KY11BS	Bkg soil	<0.1	--	<0.1	--	<0.1	--	0.000	19.0
1KY12BS	Bkg soil	<0.1	--	<0.1	--	<0.1	--	0.103	16.0
1KY13BS	Bkg soil	<0.1	--	<0.1	--	<0.1	--	0.112	19.5
	MEAN	--	--	--	--	--	--	0.072	18.2
	STD	--	--	--	--	--	--	0.062	1.9
1KY24SE	Sediment	4.7	0.5	1.6	0.4	6	1.9	0.153	29.2
1KY25SE	Sediment	1.7	0.3	<0.1		<0.1		0.074	31.8
1KY26SE	Sediment	20.3	1.3	<0.1		6.8	2.3	0.034	39.0
	MEAN	8.9	0.7			6.4	2.1	0.087	33.3
	STD	10.0	0.5			0.6	0.3	0.061	5.1

Table A-6. Radium concentration and ^{222}Rn emanation fraction data for soil and sediment samples collected from the second site sampled in Kentucky.

Sample Number	Sample Type	^{226}Ra Conc. (pCi/g)	^{226}Ra Count Error (pCi/g)	^{228}Ra Conc. (pCi/g)	^{228}Ra Count Error (pCi/g)	^{40}K Conc. (pCi/g)	^{40}K Count Error (pCi/g)	^{222}Rn Emanation Fraction	Percent Moisture
2KY14SC	Pipe scale	1596	38	42.9	3.33	<0.1	--	0.228	1.7
2KY15SC	Pipe scale	1485	36	45.9	5.49	<0.1	--	0.264	2.8
2KY16SC	Pipe scale	1979	47	55.0	7.75	<0.1	--	0.040	1.6
2KY17SC	Pipe scale	2000	49	48.1	6.96	<0.1	--	0.283	1.5
2KY18SC	Pipe scale	1711	42	38.5	2.21	<0.1	--	0.039	0.2
2KY19SC	Pipe scale	2206	53	58.1	3.90	<0.1	--	0.198	2.4
2KY20SC	Pipe scale	1873	46	48.6	5.39	<0.1	--	0.083	1.5
2KY21SC	Pipe scale	2209	54	42.9	3.58	<0.1	--	0.086	2.7
2KY22SC	Pipe scale	1729	43	45.0	6.32	<0.1	--	0.117	1.5
2KY23SC	Pipe scale	2361	57	57.3	2.84	<0.1	--	0.034	1.6
	MEAN	1915	47	48.2	4.78	--	--	0.137	1.8
	STD	288	7	6.6	1.87	--	--	0.097	0.7
2KY28SS	Soil	112	3.7	<0.1	--	40.6	10	0.155	14.1
2KY29SS	Soil	92	3.4	3.7	0.88	53.9	13.2	0.133	15.1
2KY30SS	Soil	101	3.2	<0.1	--	46.9	8	0.196	15.0
	MEAN	102	3.4	--	--	47.1	10.4	0.161	14.7
	STD	10	0.3	--	--	6.7	2.6	0.032	0.6
2KY31SS	Release soil	14	0.9	<0.1	--	22.5	2.7	0.198	12.5
2KY32SS	Release soil	38	1.8	5.8	2.21	27.8	3.1	0.052	14.6
2KY33SS	Release soil	16	1	<0.1	--	24.9	2.9	0.153	15.0
	MEAN	23	1.2	--	--	25.1	2.9	0.134	14.0
	STD	13	0.5	--	--	2.7	0.2	0.075	1.3

Table A-8. Radium concentration and ^{222}Rn emanation fraction data for soil samples collected from a site in Illinois.

Sample Number	Sample Type	^{226}Ra Conc. (pCi/g)	^{226}Ra Count Error (pCi/g)	^{228}Ra Conc. (pCi/g)	^{228}Ra Count Error (pCi/g)	^{40}K Conc. (pCi/g)	^{40}K Count Error (pCi/g)	^{222}Rn Emanation Fraction	Percent Moisture
IL01SS	Soil	1.6	0.3	1.52	0.29	10.4	2.2	0.000	10.1
IL02SS	Soil	1.8	0.3	<0.1	--	16.7	2.2	0.162	4.1
IL03SS	Soil	1.3	0.3	1.23	0.3	12.3	2.4	0.000	12.0
IL04SS	Soil	8.5	0.6	<0.1	--	11.9	2.5	0.260	10.2
IL05SS	Soil	20.2	1.4	3.14	0.39	19.5	2.8	0.127	15.8
IL06SS	Soil	14.9	1.1	4.22	0.44	18.1	2.6	0.083	18.7
IL07SS	Soil	7.8	0.6	2.79	0.39	18.1	2.5	0.053	15.8
IL08SS	Soil	14.4	0.9	2.89	0.34	17.8	2.5	0.234	8.9
IL09SS	Soil	3.2	0.3	<0.1	--	13.9	2.2	0.000	9.9
IL10SS	Soil	16.9	0.9	4.56	1.13	16.9	2.3	0.005	10.6
	MEAN	9.06	0.7	2.91	0.47	15.6	2.4	0.092	11.6
	STD	7.09	0.4	1.24	0.30	3.2	0.2	0.099	4.2

Mean radon emanation fraction is for the 6 samples for which detection limits were exceeded (i.e. zero values were ignored).

Table A-8. Radium concentration and ^{222}Rn emanation fraction data for uranium mill tailings provided from a site in Utah.

SAMPLE I.D. No.	^{226}Ra Conc. (pCi/g)	^{226}Ra Count Error (pCi/g)	^{228}Ra Conc. (pCi/g)	^{228}Ra Count Error (pCi/g)	^{40}K Conc. (pCi/g)	^{40}K Count Error (pCi/g)	^{222}Rn Emanation Fraction	Percent Moisture
UT-MT-01	452	12.6	4.1	1.5	< 0.10	--	0.1235	8.70
UT-MT-02	522	14.3	< 0.10	--	< 0.10	--	0.1826	6.46
UT-MT-03	409	11.6	< 0.10	--	< 0.10	--	0.1303	7.74
UT-MT-04	388	11.4	< 0.10	--	< 0.10	--	0.1555	8.01
UT-MT-05	420	11.6	< 0.10	--	< 0.10	--	0.1367	7.17
UT-MT-06	397	11.0	< 0.10	--	< 0.10	--	0.1664	6.01
UT-MT-07	402	11.2	4.4	1.4	< 0.10	--	0.1666	6.00
UT-MT-08	461	12.5	< 0.10	--	< 0.10	--	0.1569	4.89
UT-MT-09	422	11.8	< 0.10	--	< 0.10	--	0.1638	8.73
UT-MT-10	443	12.3	< 0.10	--	< 0.10	--	0.1638	8.26
UT-MT-11	349	10.1	< 0.10	--	< 0.10	--	0.1338	6.08
MEAN	424	12	--	--	--	--	0.1527	7.10
STD	45.3	1.1	--	--	--	--	0.0187	1.29