Midwest Geological Sequestration Consortium

Site Development, Operations, and Closure Plan

Topical Report 5

An Assessment of Geologic Carbon Sequestration Options in the Illinois Basin: Phase III

William Graham Payne[1], Jim Kirksey[1]
[1] Schlumberger Carbon Services
[2] Illinois State Geological Survey

WORK PERFORMED UNDER AGREEMENT
DE-FC26-05NT42588

Report Issued 19 November, 2014

SUBMITTED BY
Illinois State Geological Survey
The Board of Trustees of the University of Illinois
1901 S. First St., Suite A
Champaign, IL 61820

PRINCIPAL INVESTIGATOR
Robert Finley[2]
Phone: (217) 244-8389
Fax: (217) 333-2830
finley@isgs.illinois.edu

Reference No. CS1408-103-WGP

Disclaimer

This report was prepared as an account of work sponsored by an agency of the United States Government. Neither the United States Government nor any agency thereof, nor any of their employees, makes any warranty, express or implied, or assumes any legal liability or responsibility for the accuracy, completeness, or usefulness of any information, apparatus, product, or process disclosed, or represents that its use would not infringe privately owned rights. Reference herein to any specific commercial product, process, or service by trade name, trademark, manufacturer, or otherwise does not necessarily constitute or imply its endorsement, recommendation, or favoring by the United States Government or any agency thereof. The views and opinions of authors expressed herein do not necessarily state or reflect those of the United States Government or any agency thereof.

Abstract

The Midwest Geological Sequestration Consortium (MGSC) has partnered with Archer Daniels Midland Company (ADM) and Schlumberger Carbon Services to conduct a large-volume, saline reservoir storage project at ADM's agricultural products processing complex in Decatur, Illinois. The Development Phase project, named the Illinois Basin – Decatur Project (IBDP) involves the injection of 1 million tonnes of carbon dioxide (CO_2) into a deep saline formation of the Illinois Basin over a three-year period.

This report focuses on objectives, execution, and lessons learned/unanticipated results from the site development (relating specifically to surface equipment), operations, and the site closure plan.

Table of Contents

Abstract 3

Executive Summary 5

I. Site Development, Operations, and Closure Plan Objectives 6

Site Development 6

Operations 8

Closure Plan 8

II. Site Development, Operations, and Closure Plan as Executed 9

Site Development 9

Operations 19

Closure Plan 20

III. Unanticipated Results and Lessons Learned 20

IV. Conclusions 23

V. Appendices 24

Appendix A: An Assessment of Geological Carbon Sequestration Options in the Illinois Basin – Phase III – Midwest Geological Sequestration Consortium 24

Appendix B: Trimeric Design Reports 57

Appendix C: Annulus Pump Document 131

Appendix D: Project Timeline 135

Appendix E: Trimeric Pipeline Report 137

Appendix F: ADM Standard Operating Procedures 144

Appendix G: Blowout Contingency Plan 188

Appendix H: Well Closure Plan 378

Appendix I: IEPA UIC Permit 402

Executive Summary

The goal of the Illinois Basin – Decatur Project (IBDP) is to safely inject approximately 1,000 tonnes per day of carbon dioxide (CO_2) for a total injected mass of 1 million tonnes over a 3-year period. To accomplish this, facilities and infrastructure had to be designed and developed to capture, dehydrate, compress, and transport the CO_2 to the wellhead, where it is injected deep into the Mt. Simon Formation. Archer Daniels Midland Company (ADM) provides the project site as well as the CO_2 for storage from their ethanol production plant. Trimeric Corporation had process engineering design responsibility for the surface facilities and equipment. Schlumberger Carbon Services provided project management for the design and construction of all deep wells associated with the project and is the leading operational partner in the project for site characterization, reservoir modeling, risk management, well design, well construction, and well completion.

Site Development

ADM, along with Trimeric Corporation, designed and built a 50 megawatt (MWe) multi-stage CO_2 separation, dehydration, compression, and transportation system for the purpose of injecting CO_2 deep into the Mt. Simon Formation. To meet the specific delivery requirements of the CO_2, the process design was centered on selecting the appropriate equipment and work flow to optimize efficiency. Construction of the surface facilities and equipment began in November 2009 and was completed in September 2011. Initial CO_2 injection tests were conducted in November 2011, and the commencement of operational CO_2 injection began on November 17, 2011.

Operations

> The on-going injection is monitored in real time. Pressure, temperature, and other parameters are closely monitored by ADM operators, and analyzed by the project stakeholders. Since December 2011 there have been a number of scheduled and unscheduled breaks in injection. The reasons for these breaks include: maintenance and repair of surface equipment, annual well tests, well logs, equipment problems, and poor weather. These halts in injection have ranged from several hours to several days.

Closure

A site closure plan was developed to safely plug and abandon the project wells at the conclusion of the project. Because the IBDP is still injecting CO_2 at the date of this report, site closure has not yet occurred.

I. Site Development, Operations, and Closure Plan Objectives

The goals of the Phase III Midwest Geological Sequestration Consortium (MGSC) project are to demonstrate the ability of the Mt. Simon Sandstone to accept and retain one million tonnes of CO_2. To accomplish this, a number of subtasks and objectives were established related to the development of surface facilities and systems, the actual ongoing operation and injection of the CO_2, and safely closing the project. These objectives are stated in the Statement of Project Objectives (SOPO) (Appendix A). The following subtasks are addressed in this report.

Site Development

6.1 Prepare plan for integrated capture and injection operations including health, safety, and environmental measures

An infrastructure development plan was to be created that defined and included operating and injection systems, optimization studies to evaluate equipment capabilities and costs, and procurement of equipment. Injection operations plans were to include developing basis-of-design documents detailing maximum and minimum operating pressures, temperatures, flows, dehydration specifications, control scheme, utility requirements, and other process-design specifications.

6.2 Determine equipment needs for capture, dehydration, and compression

The actual optimal equipment configuration was to be determined after obtaining composition data for the planned inlet stream, reviewing site specific requirements, and specific requirements for purity of the CO_2 to be sequestered. This subtask included:

- The preparation of an optimization study to evaluate tradeoffs between compressor types (e.g. screw vs. reciprocating), cost, turn-down capability, sparing, reliability, maintenance, capital vs. operating costs, etc.
- Preparation of a process design package (PDP) including process and instrumentation diagrams, major equipment list and sizing, equipment specification sheets for major equipment and control valves, material and energy balances, process description, controls description, utility requirements, and piping tie-ins, preliminary line sizing, and insulation requirements.
- Specification of data acquisition equipment, CO_2 metering equipment, and other process instrumentation needed to meet the test objectives.

6.3 Finalize costs and delivery times for selected equipment

Upon receipt of vendor bids, equipment purchases or leases were to be finalized in coordination with ADM. This process included: reviewing vendor bids, preparing recommendations on accepting bids, negotiating with equipment suppliers, evaluating proposed changes to specifications from vendors, and responding to technical questions from vendors.

6.4 Deliverable – Submit development operations and closure plan to DOE

The Site Development, Operations, and Closure Plan was to be finalized and submitted to the US Department of Energy (DOE) as a Topical Report along with a project continuation application at the end of the first year of Budget Period 4 so that injection operations could begin at the beginning of the second year of Budget Period 4. The project team was in regular communication with DOE Project Manager and Program officials regarding development on this sub-task.

6.5 Order capture, dehydration, and compression equipment (10-12 months for receipt)

Capture, dehydration, and compression equipment was to be purchased or leased. Bids were to be collected and reviewed by both the Illinois State Geological Survey (ISGS) and ADM prior to issuing contracts.

6.6 Receive, install, and test equipment

Equipment was to be received, installed, and tested with on-site process engineering support. This subtask was to take place beginning in 2010. Analysis of operations and troubleshooting was to occur as part of this subtask.

6.7 Determine pipeline, pipeline installation, and wellhead-wellsite equipment requirements

Pipeline, pipeline installation, and wellhead-wellsite equipment requirements were to be determined and bids requested and reviewed by ISGS and DOE prior to issuing purchase agreements.

6.8 Finalize costs and delivery times for selected equipment

Upon receipt of vendor bids, pipeline and wellhead purchases were to be finalized. This process was to include: reviewing vendor bids, preparing recommendations on accepting bids, negotiating with equipment suppliers, evaluating proposed changes to specifications from vendors, and responding to technical questions from vendors.

6.9 Order pipe, valves, and related transportation equipment (6 months or more for receipt)

Pipe, valves, and related transportation equipment were to be ordered. Capture, dehydration, and compression equipment were to be purchased or leased. Bids were to be collected and reviewed. This subtask was to take place 2009.

6.10 Receive, install, and test equipment

Upon receipt of pipe and pipeline related equipment, the installation and testing of equipment was to take place.

6.11 Modify, as required, and finalize plan for integrated capture and injection operations including Health, Safety, and Environment

A final plan for integrated capture and injection operations including Health, Safety, and Environment (HSE) was to be developed.

6.12 Full-system operation testing and functional verification

A test of the complete operation for integrated capture and injection was to be conducted for verification of full functionality.

6.13 Develop a Blowout Contingency Plan

It was recognized that the loss of control of the injection well might result from factors beyond the control of project participants, such as failure of a wellhead component or deliberate physical damage inflicted on the wellhead, resulting in an uncontrolled release of CO_2 and/or formation water. A contingency plan for such an event was to be developed by experts with appropriate experience. The plan could be fully or partially implemented, depending upon the scope of a loss-of-control event and the risk to surrounding persons and property.

Operations

8.2 Inject CO_2 on an operational basis

Injection of CO_2 was scheduled to begin at the beginning of the second year of Budget Period 4. All equipment, monitoring activities and plans for updating the reservoir model were to be fully functional at this point.

8.3 Review and revise operational monitoring and injection schedule as needed

The operational monitoring plan and injection scheduled were to be reviewed periodically throughout Budget Period 4, and revised as needed. The DOE was to be advised as to changes in the operational plan and injection schedule.

Closure Plan

10.1 Secure wellbore, wellhead, pipeline, and related facilities

If ADM or another company was not interested in pursuing commercialization of the injection well, the well will be closed according to Illinois Environmental Protection Agency (IEPA) underground injection control (UIC) regulations (a closure plan is also required for the UIC application). The plan includes type and number of plugs, location of plugs and installation procedures. Various tests are required to provide evidence to IEPA that the well is properly closed. These tests include pressure tests, radioactive tracer surveys, and specific cased-hole logs (e.g. noise and/or temperature). IEPA requires a 60 day notice of closure. The IBDP project team was to deliver a topical report

summarizing the final disposition of the well and closure operations (including options for continued operation by ADM) and submit this topical report to the DOE prior to the conclusion of BP4.

II. Site Development, Operations, and Closure Plan as Executed

The goals established in the SOPO were approached individually by the project partners in the most efficient way possible. The objectives and their solutions are outlined and explained below.

Site Development

6.1 Prepare plan for integrated capture and injection operations including HSE

ADM and Trimeric worked together in designing a system that could capture, dehydrate, compress, and transport CO_2 to the injection well (CCS1) based on the design requirements, UIC permit conditions, final CO_2 composition and characteristics, and process monitoring requirements. Appendix B contains several different reports that Trimeric submitted to ADM as part of this design collaboration.

The importance of HSE and risk identification/management was established early in the formation of the project, and has continued over the course of the project

6.2 Determine equipment needs for capture, dehydration, and compression

ADM, with Trimeric Corporation, designed and built a 50 MWe multistage CO_2 separation, dehydration, compression, and transportation system for the express purpose of injecting CO_2 into the Mt. Simon. Appendix B contains reports summarizing this process.

The entire system is designed to safely meet the project goals of producing 1,000 tonnes/day of CO_2 at the appropriate pressure, temperature, and chemical composition for geologic sequestration. In Table 1, the project design and IEPA UIC permit requirements are summarized. In Table 2, the CO_2 composition requirements are summarized.

Table 1. Delivery and Permit Requirements

Operational Parameter	Project Design Requirement	Permit Requirement
Injection Rate	Able to inject at rates ranging from 250-995 tonnes/day	≤1,200 tonnes per day
Flow Control	Maintain within 10% of target flow	Not specified
Max Wellhead Pressure	1,350 - 2,000 psig	Max at well head 1,950 psi
Min Wellhead Pressure	During startup: 0 psig-1,057 psig, during normal operations: 1,057 psig	Not specified
Pressure Control	Injection pressure is not controlled when the injection rate is specified	Not specified
Max Wellhead Temperature	120 °F	150 °F
Min Wellhead Temperature	88 °F	60 °F
Temperature Control	Target set point after reciprocating compressors was 95 °F. Not controlled if multistage centrifugal pump is used, which adds 10 °F to 15 °F to CO_2 surface temperatures	Not specified

Table 2. CO_2 Chemical Composition Requirements

Component	Purity Specification
Carbon Dioxide	Minimum 99%
Oxygen	100 ppmv maximum
Water	663 ppmv maximum

To accommodate these specific delivery requirements, an integrated facility consisting of separation, dehydration, compression, and transportation equipment and hardware was developed and built. The surface facility is a 50 MWe multistage CO_2 separation, dehydration, compression, and transportation system integrated into ADM's preexisting ethanol production plant. Figures 1 and 2 are process diagrams that show both a broad and a detailed graphical representation of this. The system takes hydrated ("wet") CO_2 at 1 pound per square inch (psi) from the ethanol plant, and sends it through a 1,250 horsepower (HP) 4-stage centrifugal blower (Figure 3) and 2 parallel 3,250 HP 4-stage reciprocating compressors (Figure 4) to pressurize the CO_2 up to 584 psi. After this compression, the CO_2 travels through the dehydration facility (Figure 5), where the water is removed from the CO_2 stream. After this, the now dry CO_2 is pressurized to 1,400 psi in a final series of reciprocating compressors and a 200 HP 26-stage multistage centrifugal pump (Figure 6) that boosts the pressure to approximately 1,950 psi. This supercritical CO_2 is then transported via pipeline to CCS1.

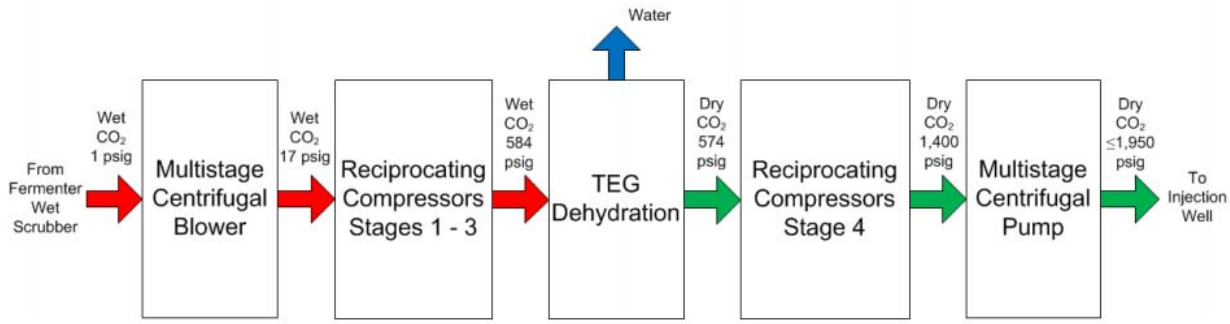

Figure 1. Broad equipment and process flow diagram.

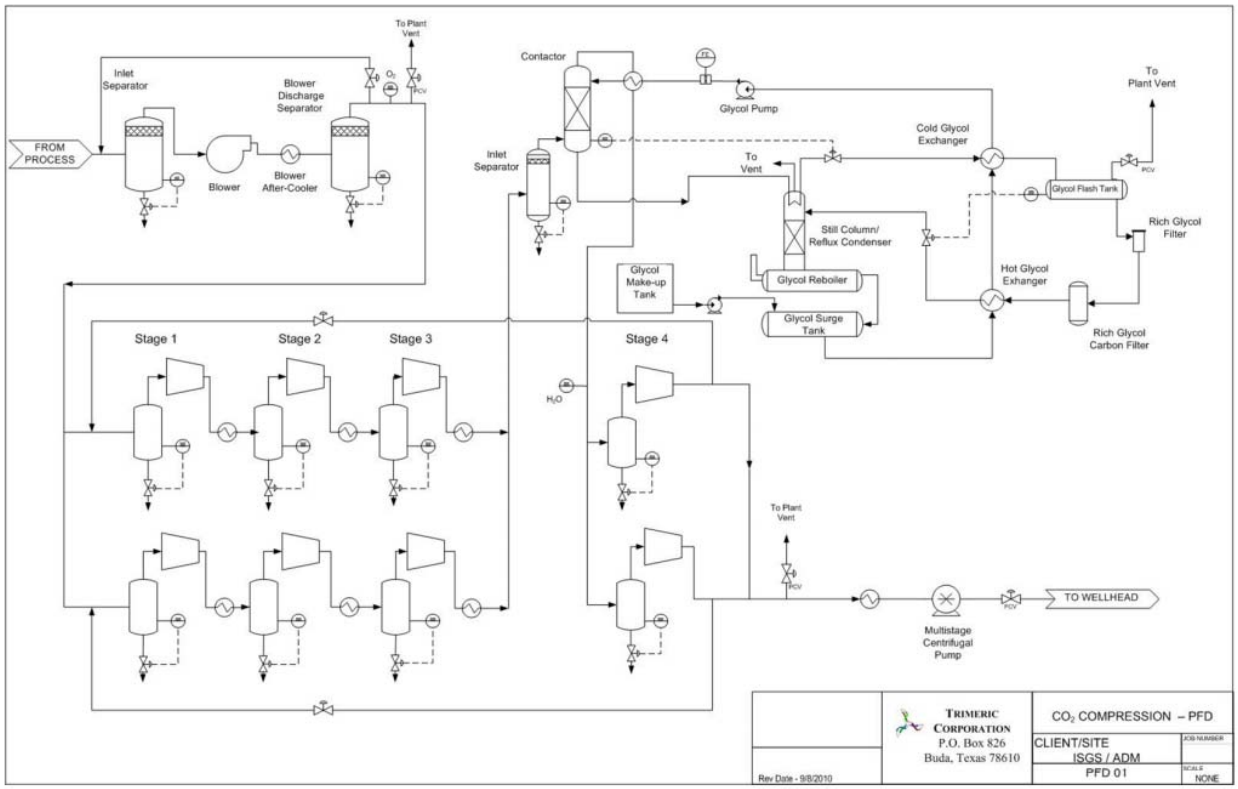

Figure 2. Detailed equipment and process flow diagram.

Figure 3. This photograph shows the 1,250 HP, 4-stage blower system in the compression facility.

Figure 4. This photograph shows the one of the 3,250 HP 4-stage reciprocating compressors in the compression facility.

Figure 5. This photograph shows the triethylene glycol (TEG) dehydration system contactor component of the system.

Figure 6. This photograph shows the final 200 HP 26-stage multistage centrifugal pump in the compression facility.

The compression and dehydration facilities use significant amounts of electricity, cooling water, and other utilities, including approximately 3,300 gallons per minute of cooling water at 85 degrees Fahrenheit (°F), 300,000 British Thermal Units (Btu) per hour for the glycol dehydrator, 5 to 6 MWe of 480 volt 3-phrase electricity, and 4,000 gallons per day of water for the CO_2 compression discharge coolers. These requirements are summarized in detail in Appendix B.

In addition to the separation, dehydration, compression, and transportation facilities, there is a separate system designed to keep the annulus of CCS1 within a pressure range mandated by the IEPA CCS1 Injection Permit. This annulus pump system is described in detail in Appendix C. This system consists of a continuous annular pressure gauge, a sodium chloride water storage reservoir, a low volume and high pressure pump, a control box, fluid connections, and electrical connections. The control box receives pressure data from the annular pressure gauge and operates the pump as needed to keep at least 400 psi of pressure on the annulus at all times. The pump is a General Pump Co. Model 1321 triplex pump powered a 1.5 HP Marathon electric motor.

6.3 Finalize costs and delivery times for selected equipment

A study was conducted in 2008 by Trimeric to identify the preferred equipment and their configurations for this project. Different configurations in the compression regime were compared using budgetary purchased equipment costs and the estimated power consumption over a 3-year project life. The final configuration consisting of one blower, two screw compressors, one reciprocating compressor, and a pump was determined to be the optimal setup, compared to a screw compressor option. Eliminating the screw compressors reduced the overall complexity of the system and the number of equipment skids.

A refrigeration based CO_2 liquefaction and pumping approach had also been considered. This approach was found to have higher power consumption and operating costs than the compressor option selected. In addition, a solid desiccant dehydration system, such as activated alumina and molecular sieves would have been required prior to refrigeration based CO_2 liquefaction, and would have added to the capital and operating costs making the selection of the compressor option the most economical choice.

Air cooled and water cooled heat exchangers were compared for the cooling needs of the project. The water cooled heat exchangers were found to provide tighter process temperature control within the surface facilities equipment, and be more conducive to the planned indoor installation of the equipment, and to have a small overall footprint. The water cooled heat exchangers also provided a lower interstage cooling and final compressor discharge temperature on days with a higher ambient atmospheric temperature. The combination of these benefits led to the selection of the water cooled heat exchangers. The installed water cooled interstage coolers are shown in Figure 7.

Figure 7. This photograph shows the water cooled interstage heat exchangers in the compression facility.

For dehydration, both a TEG and a solid desiccant (molecular sieve) system were evaluated. Although the molecular sieve system dehydrates CO_2 to a much higher degree (1lb/MMscf versus 7 lb/MMscf), the TEG system was chosen because it provided an acceptable level of dehydration based on the project requirements, and because the molecular sieve system would have required higher capital and operating costs. The final installed TEG dehydration unit is shown in Figure 5.

After this study was conducted, ADM and Trimeric finalized the equipment costs and delivery times in 2009.

6.4 Deliverable – Submit development operations and closure plan to DOE

This document is the Development, Operations, and Closure Plan.

6.5 Order capture, dehydration, and compression equipment (10-12 months for receipt)

The capture, dehydration, and compression equipment order was placed in 2009, and began to be delivered in the first quarter of 2010. This is summarized in Table 3 and Appendix D.

Table 3. Summary of surface equipment delivery

Date	Delivery
March 2010	TEG dehydration system arrives
March 2010	First compressor skid arrives
April 2010	Multistage centrifugal blower skid arrives
May 2010	Second compressor skid arrives
August 2010	Multistage centrifugal pump motor arrives
August/September 2011	Final equipment commissioning

6.6 Receive, install, and test equipment

Construction of surface facilities and the installation of the surface equipment began in the fourth quarter of 2009, and continued through the third quarter of 2011 as equipment arrived on site, with the final equipment commissioning occurring in August/September of 2011. Equipment testing (venting captured CO_2 to atmosphere) occurred in October 2011. The test results are summarized in Table 4 and Table 5. The initial CO_2 injection test occurred in November 2011. The detailed project timeline is presented in Appendix D.

Table 4. Equipment test results

Location	Design (psig)	Test Result (psig)	Design (°F)	Test Results (°F)
Blower Inlet	-0.3	-0.4	40-90	76-82
Blower Discharge	14.9	14.7	177-230	220
Recip Stage 1 Suction	12.1	12.5	90-95	91
Recip Stage 1 Discharge	60	65	293	291
Recip Stage 2 Suction	54	58	90-95	92
Recip Stage 2 Discharge	235	233	313	299
Recip Stage 3 Suction	228	220	90-95	92
Recip Stage 3 Discharge	584	573	253	244
Recip Stage 4 Suction	566	558	95-100	96
Recip Stage 4 Discharge	1411	1409	272	247

Table 5. CO_2 composition test results

Parameter	Design Target	Test Result
Oxygen (ppmv)	7	8-18
Water (lb/MMscf)	< 10	5-9
Water (ppmv)	< 211	106-190

6.7 Determine pipeline, pipeline installation, and wellhead-wellsite equipment requirements

A 6,400 foot long above ground pipeline connecting the compression facility to the injection well head was needed to deliver the CO_2 for geologic sequestration. The preexisting infrastructure at the ADM facility (railroads, buildings, gas/electrical/communication lines, etc)

resulted in the necessity of running the pipeline above ground rather than underground. The elevated pipeline connection to the wellhead also allowed easy access to the equipment for field operations such as maintenance, inspection, testing, and wireline logging.

Because the dehydration unit removes all meaningful water from the CO_2 stream to a minimum 99% purity, corrosion in the transportation pipeline is not a high risk. As a result, the pipeline was constructed out of standard carbon steel.

Trimeric undertook a study to determine which size pipeline would be optimal for this project. The results of this study were presented in a report which is included in Appendix E. A number of different pipelines with diameters were modelled to ascertain which would provide the most efficient transportation of CO_2 to the wellhead. Based on the fluid velocity, the calculated pressure drop, and the energy penalty associated with each pipeline, it was determined that a 6 inch, schedule 40, X52 pipeline would be the most efficient transportation medium.

6.8 Finalize costs and delivery times for selected equipment

ADM worked closely with Trimeric in finalizing the pipeline costs, based mainly on the pipeline study Trimeric performed (Appendix E) and the delivery time of the pipeline, which was set to be delivered in December 2009.

6.9 Order pipe, valves, and related transportation equipment (6 months or more for receipt)

The pipeline, valves, and other related transportation equipment order was placed in 2009.

6.10 Receive, install, and test equipment

The pipeline, valves, and other related transportation equipment were received in December 2009. Installation was completed in July 2010. The equipment was successfully pressured tested in July 2010, the results of which are presented in Appendix B.

6.11 Modify, as required, and finalize plan for integrated capture and injection operations including HSE

The project experienced several delays due to a variety of factors that resulted in the modification of the original plan. There were extensions in the construction phase of the project due to permitting delays for CCS1. These delays resulted in commissioning challenges including misplaced details, lost and incorrect parts, which pushed back the completion date of the surface facilities. The delays were communicated with the project partners, and they did not substantially impede ultimate project commissioning success.

ADM has produced several documents designed to aid in the integration of capture and injection operations, with a focus on HSE. These documents include a procedure outlining startup and shut procedures for both the compression facility and the dehydration facility (Appendix F). ADM also developed an integrated plan for responding to an extended pipeline shutdown (Appendix F). These documents were developed while Trimeric was on-site to assist in the equipment

testing. The plan is designed to standardize the manner in which the CO_2 equipment operators perform their daily operations and also to assist the equipment operators with minor troubleshooting.

The startup and shutdown plan for the compression facility, provided in Appendix F, details the operation of the compression equipment including the blowers, compressors, the dehydration unit, pipeline, and well head. Included in this document are: start-up procedures for each piece of equipment, their normal operating ranges and alarm settings, a process description, and shutdown procedures for each piece of equipment. Due to the design of the compression system, the start-up of the compression equipment must be done in conjunction with the start-up of the dehydration unit.

The startup and shutdown plan for the dehydration facility, provided in Appendix F, details the operation of the all the equipment employed in the dehydration process. Because of the highly integrated nature of the facility, the dehydration unit startup must be done in conjunction with the compression units. This unit works by removing water from the CO_2 stream by contacting the CO_2 with the TEG, which absorbs water out of the gas.

The extended pipeline shutdown plan, provided in Appendix F, details the steps to safely isolate the injection pipeline and injection well when the injection facility will be offline for an extended period of time, including the pipeline blow-down pressure needed as a function of the ambient outside temperature.

These plans are regularly utilized by the CO_2 equipment operators to assure adherence to best practice procedural guidelines. These plans are also used to train new operators as they come on board, and help to assure that the best practices are maintained regardless of the individual CO_2 operator.

6.12 Full-system operation testing and functional verification

Final equipment commissioning occurred in August and September of 2011. Full system equipment testing (venting to atmosphere) took place after commissioning in October 2011 (the results of which are presented in Tables 4 and 5). After the full system test was completed, an in initial CO_2 injection test could take place and was successfully performed in November 2011. Based on the success of these tests, the project team preceded with full scale CO_2 injection at a constant rate on November 17, 2011.

6.13 Develop a blowout contingency plan

The Blowout Contingency Plan was developed to define actions necessary in the unlikely event of an uncontrolled release of CO_2 from CCS1 (the CCS1 wellhead as built is shown in Figure 8). The blowout contingency plan is presented in Appendix G. In summary, the document describes the scenario of concern, while unlikely, is the loss of pressure control at the well due to all valves and safety features at the wellhead being rendered inoperable. The document states that, while this scenario is unlikely, the most likely cause of such a scenario would be from an incident of a heavy vehicle striking the wellhead. The loss of well control at surface would result in an

estimated 3,700 tonnes/day of CO_2 being delivered to the surface. Different scenarios, such as damage above and below the Master valve, are discussed, as well as treatment options and procedures. Immediate first actions and responses to a blowout and logistical considerations are also considered. This plan was circulated to and discussed with the project team for use in the unlikely event of a blowout.

Figure 8. This photograph shows CCS1, as well as the pipeline prior to insulation attached to it.

Operations

8.2 Inject CO_2 on an operational basis

Carbon dioxide has been injected on a consistent basis since November 17, 2011. All equipment, monitoring activities, and plans for updating the reservoir model were fully functional before full scale injection began. ADM monitors the ongoing injection using an integrated monitoring system, which combines data from a combination of pressure, flow, temperature, and other sensors throughout the capture, transport, and injection systems. This data is analyzed and monitored at all times to ensure continued safety during the ongoing injection.

8.3 Review and revise operational monitoring and injection schedule as needed

Operational monitoring and the review and revision process are covered extensively in Topical Report 3.

Closure Plan

10.1 Secure wellbore, wellhead, pipeline, and related facilities

A well plugging and abandonment plan was developed for the Injection Well (CCS1), the Verification Well (VW1), and the Geophysical Monitoring Well (GM1). These plugging and abandonment plans are presented in Appendices H and I and detail the exact procedures for securing the wellbore at the conclusion of the project. In summary, a workover rig will be deployed to the well, which will be used to kill the well through injecting high density well kill fluid. The workover rig will proceed to remove all subsurface well features (injection tubing, packer, downhole instrumentation) except the casing. If the packer cannot be released and removed from the cased hole, an electric line with a tubing cutter will be used to cut off the tubing above the packer. Once the tubing is removed, cement will be pumped into the well to seal the perforations. The well will then be further sealed through the use of a total of ten cement plugs which will be deployed using the balanced plug method. Finally the wellhead, other surface equipment, and pipeline will be removed. The separation, dehydration, and compression equipment are anticipated to be used in future projects.

III. Unanticipated Results and Lessons Learned

Over the course of the project, there have been several unanticipated results and lessons learned. The majority of these are centered on the operation of the surface facilities and equipment. To the credit of the team, all of the unexpected challenges were effectively managed and did not substantially affect operations or the continuity of the project.

1. The compressor facility has had several shutdowns associated with unscheduled maintenance issues and operational contingency due to weather problems affecting the entire ADM facility. Performing routine maintenance and scheduled shutdowns for repairs has reduced the number of unexpected shutdowns. Unfortunately, there is little that can be done concerning shutdowns due to weather (tornadoes and very high winds, severe storms, extreme winter cold, etc.) since changing the physical location of both the injection site and the CO_2 source is not feasible.

Lesson Learned – Understand that unexpected shutdowns will occur during the normal course of operations. Have a plan for how to manage facility, communications, etc. in the event of unexpected shutdowns.

2. The pipeline which transports the CO_2 from the final stage of compression to the well head of CCS1 was losing a significant amount of heat, especially during the winter when there is a larger difference in temperature between the CO_2 stream and the atmospheric temperature. This resulted in the CO_2 having to be injected at a lower injection pressure. The lower injection pressure caused problems controlling pressure both in the pipeline and at the wellhead of CCS1. To counter this, the 6 inch transportation pipeline was insulated to help minimize heat loss. The insulation stabilized the pressure and temperature of the CO_2 arriving at the wellhead and in the pipeline. Future CO_2 injection projects operating in cold regions should have an insulated pipeline to prevent such an occurrence.

Lesson Learned – Future CO_2 injection projects operating in cold regions that have an above-ground pipeline should insulate the pipeline to prevent such an occurrence.

3. During shutdowns CO_2 may begin to separate into a gas phase and a liquid phase. If this occurs, when CO_2 injection is resumed, there could be slugging in the pipeline. To prevent this, a blow-down valve was installed at the lowest elevation point in the pipeline, allowing operators to bleed the pipeline of the gas/liquid CO_2 until steady liquid CO_2 is produced. The blow-down valve is then shut and the wellhead opened.

Lesson Learned – Plan to have a blowdown valve at the lowest point in the pipeline to bleed gas and liquid from the line. If the pipeline for the project is underground, another method of bleeding gas and liquid from the line will have to be implemented.

4. During the winter months, the brine used to keep the annular space of CCS1 pressurized is in danger of freezing at the well head where the annulus pressure line connects to the annulus valve at the well head. The result of which would cause the annular pressure to fall below the regulatory limit. To counter this, nitrogen gas can be hooked up to the CCS1 annulus to keep the pressure above the regulatory requirements.

Lesson Learned – Local extreme temperature considerations should be given to annular pressure maintenance systems.

5. During compression, a small amount of compressor lubricating oil is introduced into the CO_2 flow stream. The presence of this oil was discovered in the injection tubing during wireline logging. The residue was analyzed and determined to be consistent with the compressor oil being used. This led to concerns that the oil could be entering the injection formation, resulting in permeability impairment. Changing the compressor oil would most likely not reduce the change of trace amounts of oil being injected along with the CO_2, so there is little that can be done from an operational standpoint.

Lesson Learned – Where applicable, be aware that small amounts of compressor oil may enter the injection system.

6. The shell and tube cooling water exchangers for the blower and compressors were using water that was out of the range of specifications for the system, which could increase the risk of corrosion and fouling the inside of the exchanger and in the cooling water return system. This was fixed by adjusting the CO_2 temperature control set points, resulting in a pre-pipeline CO_2 temperature of 98 °F.

Lesson Learned – Always be cognizant that system inputs remain within specifications. Even using cooling water that is slightly outside temperature specifications can negatively affect the overall system performance.

7. There were some difficulties when starting up the integrated separation, dehydration, and compression system. When the compressors are brought on and off-line, the pressure is very difficult to control using the pressure vent valves downstream of the blower and the pressure

vent downstream of the reciprocating compressors. To help offset this difficulty, the vent downstream of the compressor was tuned and the compressor discharge pressure shutdown set points were widened. This resulted in a much less varied pressure output, and a reduced difficulty in startup and shutdown.

Lesson Learned – Human factors in the difficulty of fine tuning pressure venting must be considered in system design. Safe, automated shutdown windows should be set as wide as possible to ease the process.

8. An automated nitrogen purge piping was installed with the compressors to help remove hydrated CO_2 from the system following a shutdown of the compressors. If this hydrated CO_2 is not removed it can cause severe corrosion in the carbon steel components of the system, and could cause damage to the suction side of the compressor system when the compressor is restarted. However, the amount of nitrogen used disrupted other users of nitrogen in the ethanol plant. Trimeric recommended installing a flow restriction orifice to the nitrogen purge lines to allow purging of the compression equipment without adversely impacting other plant operations that use nitrogen. This resolved the nitrogen disruption in the ethanol plant.

Lesson Learned – Nitrogen purging may be necessary on the compressors to prevent corrosion. Plans should include contingencies for large amounts of nitrogen to be available following a shutdown specifically for this purpose.

IV. Conclusions

The site development and operation portions of the IBDP have been very successful to date. ADM and Trimeric developed efficient separation, dehydration, compression, and transportation systems to take the CO_2 created as a byproduct from ethanol production and deliver it to the CCS1 wellhead to be injected into the Mt. Simon Formation.

Studies were undertaken to determine and optimize the specific equipment needs for these systems, the equipment was then ordered, delivered, installed, and tested. During the testing, standard operating procedures were put in place for the operation of these integrated systems. A blowout contingency plan was developed and shared with the project team to utilize in the unlikely event of a blowout. Ongoing, full scale CO_2 injection operations commenced in November 2011, and have continued to date (August 2014). The project has not concluded or reached the project goal of injecting 1,000,000 tonnes of CO_2 as of the date of this report, but is expected to reach this goal in November 2014. A comprehensive site closure plan is in place which will allow for the safe plugging and abandonment of the injection well when required.

The teamwork and communication between the performing partners has been very strong, and has been a defining factor in the success that the IBDP has demonstrated.

V. Appendices

Appendix A: An Assessment of Geological Carbon Sequestration Options in the Illinois Basin – Phase III – Midwest Geological Sequestration Consortium

An Assessment of Geological Carbon Sequestration Options in the Illinois Basin—Phase III

Midwest Geological Sequestration Consortium

Statement of Project Objectives

Revised January 2008

Revised July 2009

Revised September 2009

Revised January 2010

Revised February 2010

Revised September 2011

Revised April 2012

A. OBJECTIVES

The goal of the Phase III amendment to the work of the Midwest Geological Sequestration Consortium (MGSC) is to demonstrate the ability of the Mt. Simon Sandstone, a major regional saline reservoir in the Illinois Basin, to accept and retain 1 million tons of carbon dioxide (CO_2) injected over a period of three years. The site under development is on the property of the Archer Daniels Midland (ADM) Company in Decatur, Illinois, and the source of the CO_2 is ADM's ethanol fermentation operation at their Decatur facility. A detailed pre-injection site assessment and drilling of one injection well took place under the saline reservoir task (Task 12) of our Phase II effort to characterize the site and ensure its suitability. Phase III activities have been overlain on the Phase II effort to make the site suitable for a large-scale injection test. By linking Phase II and proposed Phase III tasks, our goal is to reduce costs and test large-scale

sequestration sooner than might otherwise be possible. We believe this is an important objective given the increased costs for steel pipe, drilling, well logging, and other oil field services that have occurred since Phase II was proposed. Outreach pathways to government, business and the general public have been defined and represent a continuation of those efforts under Phase II but at a restricted level

B. SCOPE OF WORK

The MGSC Phase III large-scale injection test focuses on acceptance by the saline reservoir of the CO_2 (injectivity), ability of the reservoir to store the CO_2 (storage capacity), the integrity of the seals and of the entire site, and the entire process of pre-injection characterization, injection process monitoring, and post-injection monitoring to understand the fate of the CO_2. These targets can be summarized under the general processes of modeling, capture, injection, and monitoring. Reservoir modeling will incorporate data developed prior to injection as the site is initially characterized, data developed from the initial well drilled on the injection site, and data collected as injection proceeds. The MGSC has initially characterized the Phase III site using orthogonal 2D seismic lines to confirm the geological structure at the site and to test for any seismically resolvable faults that may exist. A well was drilled through the entire Mt. Simon Sandstone to the underlying granitic basement and included extensive logging, core sampling, and fluid sampling to build a comprehensive reservoir model at the site. This model will guide our understanding of the distribution of CO_2 once injected and of the potential reactivity of the CO_2 and CO_2-laden brine with the reservoir and the seals. The model will be expanded as more data are derived from a baseline 3D seismic survey and will be used to predict where additional geophysical surveys should be deployed as CO_2 is injected. The sequestration site at the ADM facility will be supplied with 99 percent pure CO_2 from the ethanol production part of ADM's operations. Injection at a nominal daily rate of 1,000 tonnes per day will begin in February 2011. The CO_2 will be supplied by the ADM from their ethanol fermentation plant at their Decatur, Illinois agricultural products processing facility. The initial injection zone is near the base of the Mt. Simon Sandstone based on regional geology and well logs and core samples taken from the initial well drilled on the site. The commodity cost of the CO_2 will be supplied as cost share by ADM while the project will fund the dehydration, compression, pipeline, and related facilities to deliver the CO_2 to the wellhead in a supercritical state.

The Phase III efforts will continue to refine some of the MVA techniques utilized in Phase II and

seek to understand potential leakage pathways of the larger scale test, provide post-injection monitoring, and provide assurance that health and safety requirements are fully taken into account. Initial site environmental monitoring is designed, for a selected number of parameters as possible consistent with budget, permitting and timing of drilling, to obtain a baseline of environmental parameters for at least one year before CO_2 is injected. We will continue with a strong emphasis on capture and transportation during Phase III, but will significantly restrict public outreach and education due to budget limitations.

C. TASKS TO BE PERFORMED

1. Regional Characterization

1.1 Acquire and evaluate nearest existing geophysical data

Conduct a study to determine if there exists any commercially available seismic data and deep well logs that the project does not currently have access to. Those data will be evaluated to help refine the regional geologic setting of the proposed test site in Decatur, Illinois.

1.2 Shoot N-S and E-W 2D seismic lines

Two, 2D seismic lines (N-S and E-W) will be shot to provide better local characterization of the Mt. Simon and depth to basement (granite) at the ADM site. Mt. Simon and St. Peter structure and isopach maps will be made of this immediate area. Because the proposed site is part of an ethanol plant complex and some of the nearby areas are commercial and residential, the acquisition of seismic data will provide unique opportunities to acquire analyzable seismic data in complex surface settings. This procedure is likely to be adaptable to other areas with sources in and/or around industrial plant complexes and developed areas.

1.3 Process and interpret 2D data to validate site

The processed data will be reviewed for evidence of faulting and/or fracturing that could compromise the injection at this site. Lack of such evidence will only be confirmed relative to the resolution of the seismic data which will depend on final acquisition parameters and site conditions.

1.4 Review and update regional Mt. Simon and St. Peter maps (structure, isopach, etc.)

Local characterization (within a few square miles of the proposed injection well site) and pre-injection geophysical analyses will be used to improve the regional and local geology around the site. These data include open-hole well logs and interpretation of 2D seismic data that will be acquired early in Phase III. There are three Mt. Simon penetrations in the region that were used in the assessments to-date; however, one only penetrates the upper 200 feet or so of the Mt. Simon. These wells will be used to further approximate regional capacity.

1.5 Review and update hydrological regime for north-central Illinois Basin

The project will collect additional information and refine the hydrologic models of the north central Illinois Basin. Improving the understanding of the regional hydrological regime of the Mt. Simon is part of the regional characterization. The work will focus on better defining storage efficiency and potential movement of CO_2 due to naturally occurring pressure gradients and basinal flow patterns within the Mt. Simon.

1.6 Use regional characteristics to define subregional geologic and hydrologic setting

After injection, specific seismic and other data will be measured, analyzed and modeled and to improve the estimate of storage efficiency for the Mt. Simon. Using the newly acquired results, additional refinement to the methodology of estimating regional capacity of the Mt. Simon will be made and contributed to updates of the National Atlas.

1.7 Define data needs for site characterization

Following this preliminary assessment, additional data needs will be identified for the site characterization effort. Data needs would be defined for, but not limited to, well bore, subsurface geology, to identify injection zones, define faults and fractures, and baseline information in preparation of monitoring during operations. The project will particularly focus on the data needed to image the injected plume geophysically given the constraints of surface access due to industrial operations and other surface features. Refinements to technology or interpretation of seismic data will be tested during the project. A well with a permanently installed geophone array will be tested and used to run repeat radial VSPs for plume imaging. A Topical Report will be prepared on the preliminary site and regional characterization outcomes.

1.8 Update regional CO_2 emissions

Characterization of emission sources in the Illinois Basin under Phase II will be carried out. Additional data from industrial sources, such as food processing and automobile manufacturing plants, will also be collected. Detailed characterization of CO_2 emission sources will be conducted to identify those sources that have the most attractive overall economic performance potential for large-scale capture and transportation.

1.9 Update regional characterization based on project wells

Various tests and interpreted results are planned at the test well site to improve the understanding of the storage mechanisms of CO_2 (e.g. dissolution and capillary trapping) and refining the methodology used to estimate the CO_2 storage capacity of the Mt. Simon. The wells planned at the site will give well-characterized data points to update regional understanding of Mt. Simon capacity. The statistical based methodology used in the Carbon Sequestration Atlas of the United States and Canada (National Atlas) (DOE, 2007) will be tested and refined. In that study, 1-4% of the bulk volume was estimated to be accessible for CO_2 storage in the Mt. Simon.

1.10 Update regional geology based on Hancock County, KY well

The drilling of a new, deep sequestration test will in Hancock County, KY in 2009 has allowed funding and acquisition of new core in the Precambrian and overlying stratigraphic units that will afford new insights in the depositionally downdip sediments of the Illinois Basin. The core descriptions, well log data, and test results from this well will be integrated into our regional understanding of the reservoir quality of the Mt. Simon and Precambrian units that serves as reservoirs or basal seals for injected fluids. This is a particularly important well because there are no other deep penetrations in the far southern part of the basin from which this information can be developed.

1.11 Storage capacity characterization

Apply new knowledge gained in the course of project work to assist DOE in updating characterization of reservoir storage resources. Participate in work groups and assist DOE in developing storage capacity atlases based on new assessments and approaches. Ensure that approaches are consistent with common oil and gas resource assessment approaches. Engage outside industry expertise, as appropriate, for support and review.

1.12 Develop, Test, and Calibrate a Universal Methodology to Estimate CO_2 EOR and Storage Capacity

Develop general CO_2 EOR performance curves that reflect Illinois Basin (ILB) geologic formations. Develop a rigorous geologic and reservoir model to test and calibrate the general performance curves. Perform a surface facility study including capital and operating expenses. Develop guidance on applying the performance curves to other basins and geologic formations. This work will be performed with some assistance from Advanced Resources International (ARI), whose contribution to this effort will be funded from a separate DOE supported project (NT42590). The work described below is that which will be performed by the recipient. It is anticipated that travel to ARI's office is Houston, TX will be necessary on occasion to facilitate information exchange.

1.12.1 Derive CO_2 EOR Performance Curves Based on Illinois Basin Geologic Formations

Geologic and reservoir models from MGSC's Phase I assessment to derive oil recovery and storage factors for specific geologic formations in the Illinois Basin will be reviewed and studied for use in developing CO_2 EOR performance curves. These curves can be normalized for use in other Illinois Basin fields and possibly other basins with similar geologic depositional systems and oil-CO_2 characteristics.

1.12.1.1 Review existing Phase I geologic and reservoir models

The MGSC Phase I models were intended to represent three of the most prolific oil producing geologic formations in the Basin. The data used was from specific oilfields but were intended to represent the geology and not the oilfield. Specific history matches were not attempted and primary production and waterflooding in these models was based on general understanding of the ILB's historical oilfield development. Additionally, to support the volumetric approach of estimating CO_2 EOR and storage, only the final estimate of oil recovery and CO_2 storage efficiency were used from each model.

Each model was run to relatively high produced CO_2-oil ratios with no consideration of economics because the objective was to estimate the CO_2 EOR resource, not reserves.

Specific details of each model that will be reviewed are as follows:

- relative permeability
- geologic boundaries
- well spacing and injection pattern size and shape

- fluid characterization (pseudo-components)
- equation of state parameters
- injection schemes (e.g. WAG and continuous)

1.12.1.2 Run new models as determined by subtasks 1.12.1.1 and 1.12.1.2

New models for different well spacing WAG ratios, injection rates, and patterns will be re-run as necessary. ARI will be included in this decision to make new projections with the new models and a general assessment of the existing models.

1.12.1.3 Develop and assess preliminary set of performance curves

After the models have been determined useful for providing data to develop the performance curves, the annual production and injection data from the Phase I models will be extracted. The data will be grouped by geologic formation, miscible or immiscible flood type, and WAG or continuous CO_2 injection scheme. Several normalization algorithms will be attempted to provide multiple performance curves. Example of normalization algorithms may be with respect to the OOIP, HCPV, acreage, injection well count, and injection pattern count. An attempt to quantify heterogeneity similar to Dykstra-Parson or Lorenz Coefficients will be made. Particular emphasis will be given to geologic compartmentalization with respect to well spacing which is a particular concern in flooding of ILB oilfields. ARI's estimates of CO_2 EOR and storage using economic criteria with the preliminary performance curves will be compared to MGSC's current estimates using Phase I methodology.

1.12.2 Build a New Geologic and Reservoir Model

Starting with one of the Phase I models, a new geologic model will be the basis for a new reservoir model for a specific ILB oilfield. The choice of the field will based on a review of the Phase I models and the current operator/owners interest in providing additional field data.

This activity is designed to be similar to what a company may be required to do to select an EOR site from a previous site screening process. This will be based on Jarrell et al. (2002) recommendations for a CO2 EOR scoping study. Performance with preliminary performance curves will be compared.

1.12.2.1 Identify oilfield for scoping study

The selection of the field will be based on available data and operator/owner interest in

providing support to this proposal. ARI will be included in this decision so that the choice of fields compliments their proposed tasks.

1.12.2.2 Obtain representative crude oil and core samples, collect oilfield historical data, and obtain representative crude oil and core samples

Availability of core will be sought through the ISGS core library. The crude oil samples will be acquired directly from the operator. Data typically not available to the public is the historical production, injection, and pressure data as well as the well file records that include well performance and workover records. This will be obtained directly from the operator.

1.12.2.3 Develop a new geologic model and geostatistical model

Starting with an existing model, alternative geologic models that may be equally likely for this specific oilfield will be considered. Specific improvements will be on model boundaries, depositional environment, and petrophysical relationships (e.g. porosity and permeability). Multiple geostatistical models that represent the Basin's geologic formations will be reviewed and prioritized as most likely to represent the specific oilfields historical development and production. Improvements will be made to enhance the porosity and permeability relationships used in the original models.

1.12.2.4 Fluid properties: MMP, Sor and EOS

To give general guidance to the PVT work, the minimum miscibility pressure (MMP) of the crude oil samples will be measured. This will also be important calibration data to the EOS tuning process. Core floods will be carried out to estimate end point saturations and relative permeability for use in reservoir models. An equation of state (EOS) will be tuned to the slimtube results and any fluid data available from the operator.

1.12.2.5 Reservoir model calibration

Starting with the geostatistical representation of the oilfield's geology, the reservoir model will include the tuned EOS and relative permeability endpoint data. History matching will be completed for the primary and waterflood production of the oilfield. This calibrated model will be used to make projections of CO_2 EOR floods for specific comparison to the preliminary performance curves from subtask 1.12.1

1.12.2.6 Comparison and calibration of performance curves to model results

The projections from the specific reservoir model will be used to test the effectiveness of the performance curves. Adjustments will be made as necessary to calibrate the curves to this model.

1.12.3 Identify Capital and Operating Expenses Specific to Illinois Basin Oilfields

Important to any CO_2 EOR economic model is the capital and operating expenses of equipment required to handle the production and re-injection of CO_2. Because of the differences between Permian Basin and Illinois Basin oil reservoirs, a study will be undertaken to identify how these differences affect facility design and operating expenses. The age of wellbores in the Basin will be an important consideration in CO_2 EOR in the ILB. Cases considered will be to re-drill all wells, re-drill injection wells only, and workover of existing wells only.

1.12.3.1 Review of Illinois Basin historical oilfield operations

Key operational components that are anticipated to directly affect Basin CO_2 EOR projects will be identified. Those that are projected to have the greatest impact on economic and technical success of the flood will be prioritized for integration with other subtasks and ARI's economic analyses.

1.12.3.2 Illinois Basin production and injection facility design

Equipment requirements for CO_2 re-injection (compression), gas-liquid separation, and production of NGLs that may be enhanced from CO_2 stripping hydrocarbons from the oil will be included. A cursory design of a "likely" Illinois Basin oilfield CO_2 EOR facility will be completed for a low pressure and high pressure case with and without NGL separation of the re-injected CO_2 stream. Estimates of capital and operating expenses of the equipment will be made. Results of this subtask will be provided to ARI for their economic analyses.

1.12.3.3 Pre-CO_2 injection well work projections

In order to have as likely as possible field implementation scenarios in the economic models, a cursory review of Basin wellbores will be made. The purpose will be to establish types and frequency of well workovers and injection and production flow line maintenance that are typically required. This information will be used to describe

preparatory work and related expenses to start a CO_2 flood in the Basin. Results of this subtask will be provided to ARI for their economic analyses.

1.12.4 Documentation of Use of Performance Curves

The final documents will be comprehensive discussions of the use of the performance curves for more general use in other basins and geologic formations.

1.12.4.1 Document design of general CO_2 EOR facility for ILB

A report on a CO_2 EOR facility for ILB will have general interest for many other oil producing basins' operators with less knowledge of facility requirements compared to the Permian Basin of Texas. The projected expenses will improve screening and scoping economic analyses for this work and other companies interested in the ILB.

1.12.4.2 Document process of building model to calibrate the performance curves

The methodology used to derive the performance curves from geologic and reservoir models will be documented. The use of data from a history matched reservoir model to calibrate the performance curves will be included.

1.12.4.3 Document recommended use of performance curves

In addition to documenting the methodology, the application of the performance curves to the Basin's oilfields and the anticipated application of these curves to other basins with similar geologic formations and crude oil characteristics.

1.12.4.4 Document comparison of Phase I EOR and Storage Resource Assessment and results of this study to the for ILB

An update of the MGSC's Phase I EOR Storage Resource Assessment will be made using the results of the preliminary and final performance curves and economics for Illinois Basin oilfields. The update will include the classification of Prospective Resource in terms of sub-classification from Site Screening, Site Selection, Initial Characterization, and Evaluation Process (Rodosta et al, 2011). This document serves as an example of the use of the classification system for use in improving CO_2 storage assessment for other RCSPs.

2. Public Outreach and Education

The goals of the MGSC outreach program are to ensure that sufficient outreach is conducted in the field site area, to build informed and supportive constituencies, and to participate in international technology transfer and networking events in support of DOE's international collaboration initiatives. The latter goal will require international travel to International Energy Agency Network events and to Greenhouse Gas Technology Conferences in 2010 and 2012.

2.1 Adapt Phase II materials to explain Phase III larger-scale test

The MGSC outreach program goal is to ensure sufficient outreach is conducted in the field site area and to build informed and supportive constituencies. The outreach effort initiated in Phase II will be continued through Phase III. The project will deliver presentations, develop information materials and work with contacts at the Decatur school district, and Richland Community College, on a limited basis.

2.2 Work with partners to develop print and digital site-specific outreach materials

The MGSC will develop materials that synthesize research results and/or convey basic geological concepts in ways that are comprehensive and appropriate for multiple audiences.

2.3 Design outreach plan for test site area in cooperation with ADM

Focus will be on sequestration-related communication for the general public. The outreach program will consist of support for the pilot site and the entire sequestration effort of the MGSC, scientific staff, industrial partners, and subcontractors. In collaboration with ADM and Schlumberger personnel, an outreach plan specific to the injection project will be developed from Phase II pilot outreach meetings and engagement with the public and government agencies.

2.4 Initiate outreach plan for public

Businesses, organizations, and/or individuals in the immediate area will be contacted to discuss the project. Briefings will be held for local, city, and county officials to learn about this project. A summary of the discussion, including concerns and support of the projects, will be documented.

2.5 Improve outreach materials as more data are developed

Website materials will be updated and improved as data are collected from the active phases of the injection process.

2.6 Maintain stages of outreach plan as project proceeds

The MGSC outreach program's effectiveness will be assessed prior to each budget period and efforts will be documented.

2.7 Participate in International Technology Transfer and Networking Events

The MGSC will participate in international conferences and technology transfer events in support of DOE's international collaboration initiatives to inform the international community of MGSC activities and achievements and to share lessons learned.

3. Permitting and NEPA Compliance

3.1 Define permits required and prepare permit requests

A preliminary meeting has already been held with Illinois EPA officials with respect to permitting the deep saline reservoir test. It is unclear whether we will be able to permit the well as UIC Class V Experimental or Class I Non-hazardous. Further dialogue will be required to set a direction as we develop the needed information for the permits.

3.2 Complete NEPA questionnaire(s) related to field operations

We will submit a NEPA questionnaire(s) or other required NEPA information to allow the DOE project manager to determine what further steps are necessary to meet NEPA requirements.

3.3 Deliverable – Submit NEPA support documents to DOE

Support documents will be submitted as needed which describe the project operations, site locations, and other information, as requested from DOE, to support the NEPA process.

3.4 Support public and government involvement as permit process proceeds

The UIC permit process will likely involve a public hearing to allow us to proceed with drilling the well. Supporting this process may involve meetings with local officials, ADM staff open houses, or similar efforts to support the permitting process as it proceeds. (Brief summaries of the public meeting will be submitted to DOE within 7 days of the meeting)

3.5 Deliverable – Submit permitting action plan

The Permitting Action Plan will be developed and submitted to DOE. This Plan will document the agencies and information required for the UIC permit. The permit will be sought early in Budget Period 3; this plan will have schedules of application submission and anticipated approval dates. NEPA activities will be included in this Plan.

3.6 Apply for UIC permit

A submission to the Illinois Environmental Protection Agency (IEPA) will be made for UIC Class I (non-hazardous) or Class V permit for the CO_2 injection at the ADM site. While USEPA guidelines suggest UIC Class V, for precautionary reasons only, this well will be designed to meet Class I requirements, as such the Class V permit application will likely adhere to Class I (non-hazardous) requirements. Furthermore, this will provide increased opportunity for ADM or another company to commercially use this site after the DOE-funded project is completed. Per the UIC regulations, the application must be submitted and approved prior to drilling the well. An area permit application is an option that may be useful for applying for a permit for the injection and two verification wells simultaneously. Otherwise, individual well permits may be sought. Upon submittal of the permit application, the IEPA will review and process the UIC permit in a period of 60-90 days, which includes a 30-day public comment period that is open at the same time IEPA is reviewing the permit application. The well construction permit will be issued using best-known data, which must be supplemented with a completion report completed prior to IEPA authorizing permission to operate the well. The completion report includes updated information acquired from the newly drilled well. Topical Report – Summary of the UIC permitting process which will include copies of the permit applications for drilling and UIC injection.

3.7 Receive preliminary UIC permit - Milestone

The preliminary UIC permit is estimated to be obtained in the first six months of BP3 (based on 60-90 day turn-around time and public notice period). Final UIC operating permission will be granted upon submission of a completion report, which includes specific data from the drilling of the injection well.

3.8 Receive final UIC permit - Milestone

The final operating permit will incorporate reservoir and other information from the injection well and will allow injection to proceed.

3.9 Prepare application for UIC Class VI permit

A UIC program injection well application to convert the injection well from Class 1 Non-hazardous to Class VI will be prepared in accordance with 40 CFR part 146 requirements and submitted to USEPA Region 5 by the December 10, 2011 deadline set by USEPA. The Illinois EPA has likewise made this submittal a requirement of our Class I Nonhazardous UIC permit.

3.10 Receive NEPA clearance to inject - Milestone

NEPA clearance to inject will be required in advance of initiating large-volume injection.

3.11 Participate in International Technology Transfer and Networking Events

The MGSC will participate in international conferences and technology transfer events in support of DOE's international collaboration initiatives to inform the international community of MGSC's permitting issues and activities and to exchange ideas regarding regulation and policy.

4. Site Characterization and Modeling

4.1 Assess options, costs, applicability, and deployment needs for available technologies

Following the comprehensive inventory of currently available data and modeling based on Mt. Simon analogs to the ADM site (Task 1), plans will be made to obtain additional data to support detailed characterization of the site development and injection operations. This will include costs, applicability, and deployment needs for available technologies while considering permitting requirements.

4.2 Select technologies to meet site characterization and compile into plan

Given the available data, and given the surface features at and surrounding the site, geophysical, well logging, surface monitoring, and other technologies will be identified and selected to meet site characterization requirements. This includes technologies needed to generate data for reservoir monitoring.

4.3 Deliverable – Submit Site Characterization, Modeling, and Monitoring Plan to DOE

Based on this work (Subtasks 4.1-4.2), the Site Characterization, Modeling and Monitoring Plan will be developed and submitted to DOE for approval (Topical Report).

4.4 Perform 2-D geophysical testing and interpretation to validate drill site selection

2-D geophysical testing and interpretation will be conducted to validate drill site selection. Vertical seismic profiling (VSP) will be utilized to further validate the site selection following the drilling of the injection well. VSP can be readily repeated and seismic source locations easily reoccupied for comparison during later surveys.

4.5 Perform 3-D geophysical testing and interpretation to validate drill site selection

A baseline 3D seismic survey will be conducted. The survey will provide a key volume of data for delineation of any faults and fracture systems not previously identified and for post-injection assessment of the position of the CO_2 plume. The volume will also be useful for identification of any of the well-derived data, such a porosity zones seen on logs that may be extrapolated in three dimensions. The lessons learned on ability to use 3-D seismic in the region and effects of surface restrictions on data quality will be considered.

4.6 Define monitoring objectives

Measurement, mitigation, and verification (MVA) will be planned to understand the fate of the injected CO_2 and any potential for it to reach the environment in an unintended manner. It is envisioned that the MVA program will be dynamic such that as information is collected through the life of the project, monitoring can be directed toward areas that pose the greatest risk. Monitoring objectives will be defined with a focus toward increasing understanding of near surface properties, subsurface properties and structure to evaluate with confidence the capacity, injectivity, and containment performance of the Mt. Simon Sandstone and the primary Eau Claire Shale seal. A specific program will be designed to provide the environmental parameters necessary to detect and understand any unplanned releases of CO_2

4.7 Carry out modeling to validate objectives

Models planned for use in verifying the fate of CO_2 will include in-zone modeling using Schlumberger's Eclipse model and out-of-zone modeling like the TOUGH series by Lawrence

Berkeley. However, scenarios will be limited until additional Mt. Simon wells are drilled and the subsequent data obtained are included in the models.

4.8 Determine parameters, techniques, and equipment needs

Parameters, techniques, and equipment needs for site characterization will be determined. The tests anticipated to provide detailed site characterization and model input and verification parameters include:

- 2D and 3D geophysical testing and interpretation.
- Interpretation of two orthogonal lines (acquired in Task 1) of 2D seismic along the west and north boundaries of the injection well site to assess structural closure and evaluate reservoir targets for thinning, pinchouts, and detectable faults that could impact target reservoir occurrence and seal integrity.
- Shoot, process, and interpret a block of 3D seismic data to verify conclusions from 2D lines, provide greater detail of structural and stratigraphic configuration, provide an analysis of any detectable faults or fractures stretching from the caprock into the overburden, and serve as baseline for reservoir and fluid distribution within the Mt. Simon and shallower zones. Optimize acquisition for seismic resolution at the depths of the saline reservoir.

Other approaches to this subtask may be selected from among the following:

Monitoring Technique	Purpose

Ambient air quality monitoring 1) Measure CO_2 concentrations at/near injection well to maintain safety standards. 2) Carry out atmospheric dispersion modeling for the site to inform fate of any inadvertently emitted CO_2.	Insure safety of employees. Model distribution of CO_2 at the site to inform on atmospheric distribution in the event of a larger leak.
3D seismic and VSP surveys	Confirm injection formation and seal structure, monitor CO_2 migration pathways and size of plume
Injection well logging	Validate integrity of injection well, monitor storage formation and seal, measure formation resistivity, seismic velocities, moisture, gas, salinity and hydrocarbon content around well casing
Measure pressure, gas content and isotopic signature in injection well casing and annulus	Safety monitoring to restrict over-pressuring of formation, and determine CO_2/formation reactions
Monitor injection formation (Mt. Simon) and Galesville formation immediately above Eau Claire caprock pressure, temperature, gas content, and formation fluid chemistry	Monitor CO_2 reactions with formation matrix and fluids, determine changes in formation overlying caprock seal that would indicate CO_2 leakage.
High resolution earth resistivity surveys around injection	Monitor occurrence of gas in subsurface to validate integrity of seal formation, injection well, and other potential migration pathways to the biosphere
Measure CO_2 concentrations and isotopic signature in vadose zone	Monitor CO_2 concentrations and isotopic signature in vadose zone to validate integrity of seal formation, injection well, and other potential migration pathways to the biosphere
Determine shallow groundwater flow direction and model groundwater transport,, install monitoring wells, conduct geophysical logs, measure water quality of shallow groundwater,	Monitor changes in water quality after CO_2 injection to validate integrity of seal formation, injection well, and other potential migration pathways to the biosphere
Measure water quality from potential production wells	Monitor changes in water quality after CO_2 injection to validate integrity of seal formation, injection well, and other potential migration pathways to the biosphere
Aerial imaging of injection site	Monitor vegetative conditions using IR imaging to validate integrity of seal formation, injection well, and other potential migration pathways to the biosphere
Model potential geochemical reactions and CO_2 migration in injection formation	Validate that formation responded to CO_2 injection as anticipated
Measure CO_2 injection rates and volumes	Validate volume of CO_2 injected into formation
Isotopic characterization of injected CO_2	Measure isotopic composition of CO_2 potentially to be used to trace CO_2 migration

Monitor formation pressure and temperature	Determine reactions of injected CO_2 to formation matrix and fluid, provide level of safety to operators, and to insure integrity of formation and seal
Measure CO_2 surface fluxes using accumulation chambers	Monitor CO_2 fluxes at soil surfaces near injection well to validate integrity of seal formation, injection well, and other potential migration pathways to the biosphere
Monitor microseismic activity near injection well	Validate that the injection formation is responding to CO_2 injection (no formation over pressure) as anticipated

4.9 Baseline monitoring of groundwater, vadose zone and environment

Pre-injection background monitoring of groundwater and the vadose zone will be performed as extensively as monitoring resources allow for definitive changes in the monitoring parameters to be determined during the various project stages. Carbon dioxide injection rates and volumes will be measured and direct and indirect strategies will be used for monitoring plume migration in the injection formation as well as for potential leakage through the confining caprock. Direct strategies include well casing and annulus monitoring for pressure and CO_2, injection formation pressures and temperature monitoring, injected CO_2 monitoring, formation and caprock gas (if any) isotopic characterization, and vadose zone soil gas monitoring. Indirect strategies include geophysical monitoring of the deep and shallow bedrock, aerial or satellite imagery, and multiphase/multicomponent flow models for simulating gas and liquid-phase flow in the injection formation (in-zone) and the near-surface environment (out-of-zone). Mitigation measures will be defined in relation to the characteristics of the test site, should they be necessary. In most cases, a test site mitigation option would be to vent CO_2 under appropriate controlled conditions to release reservoir pressure if casing leaks or other uncontrolled release is indicated. The following will be conducted:

- Document the pre-CO_2 injection (background) and post-injection vadose zone soil pore gas CO_2 and CH_4 concentrations at the test site to document 1) the existing distribution of subsurface CO_2 concentrations and 2) the potential for leaking hydrocarbons based on continued sampling during and after testing.
- Conduct pre-injection earth resistivity and electromagnetic induction geophysical surveys of the injection well vicinity to determine the distribution of any soil gas present and establish baseline conditions relative to any potential migration pathways.
- Conduct shallow groundwater monitoring using any existing wells in proximity to the test site and by installing monitoring wells in a suitable pattern around the injection well. Groundwater samples will be analyzed to determine cations (Ca, Na, K, Mg), anions (Cl,

NO_2, NO_3, SO_4), ammonia, major and trace metals, carbon dioxide, and dissolved oxygen concentrations. In addition, pH, redox potential, temperature, and alkalinity will be measured.

- Measure the injection volumes and isotopic character of the injected CO_2.
- Design and install an ambient CO_2 alarm system to remain in place during injection operations in order to protect human health.
- Construct injection wells to allow sampling of pressure and gas content in the well casing annulus to provide early evidence of any migration to shallower horizons around the wellbore and indications of any cement failure below the open annulus.
- Ground water monitoring wells will be installed to provide detailed stratigraphic data for the upper 100-300 ft, depending on depth to bedrock at the ADM site.
- Vadose zone test wells will be installed at varying depth to provide soil gas samples.

4.10 Develop drilling prognosis based on site characterization

A drilling prognosis will be developed based on site characterization. After drilling the injection well to basement, completely penetrating the Mt. Simon formation, numerous in-zone data can be obtained to modify the original outlook.

- Downhole fluid samples will be taken to determine composition of the formation water, which is important to assess mineral trapping and dissolution of CO_2 into the water.
- Pressure and temperature data are limited in the deeper part of the Basin. Drill stem and pressure falloff tests will be used to estimate flow characteristics.
- Seismic imagery will provide an improved understanding of the structure, and reservoir modeling will be used to history match the injection performance.
- Modeling will be completed on the pilot to estimate injection rate, ultimate CO_2 storage and value-added benefits. These results will be further adapted to improve the basin-scale estimates from MGSC Phase I and II.
- Whole core and rotary sidewall core (based on open hole log interpretation) will be conducted to provide samples for tests to determine mineralogy, porosity, and permeability and to conduct special core analyses (e.g. residual saturations).
- Drill stem tests will be conducted to provide a fluid sample, average pore pressure, and estimates of permeability for zones tested.
- Open-hole well logs will be conducted for porosity and lithology and to improve seismic interpretation, and cased hole logs will be conducted to determine background stratigraphic saturation profiles near the injection well.

The data acquired through these additional tests and the subsequent modeling will lead to the

final site plan, injection operation plan, and the monitoring plan. This includes the injection rates that are likely and the surface area that is needed for monitoring efforts.

4.11 Seal and reservoir characterization and modeling

A two-well drilling and completion program is planned. This includes one injection well and one verification/monitoring well. Most of the detailed characterization will be completed following the first drilled well (BP3 and early PB4 after processing of the January 2010 3D survey) and the subsequent tests conducted on this well and the core and fluid samples acquired from this well. The data acquired from the additional well will be used to verify the models built from data from the first well only. This will include porosity and permeability distribution, fluid sampling (verification of the distribution of supercritical CO_2), open-hole and cased hole data collection, and geophysical observations.

4.12 Atmospheric monitoring and modeling

Direct measurement of CO_2 concentrations in the air is an integral part of the MVA program to ensure the health and safety of the public and to curtail environmental impacts. The natural variations in CO_2 concentrations and fluxes in the near surface environment that arise from soil, plant and subsurface processes. Eddy covariance (EC) is a technique using an Infrared Gas Analyzer (IRGA) and numerous micrometeorological variables including wind velocity, relative humidity, and temperature to determine CO_2 fluxes over a large area. This technique will be employed at the site for a short period ending in September 2010. Some baseline EC information will be obtained and analyzed but no data will be collected during actual injection. A remote air safety monitoring system will be put in place north of the wellhead as a local safety measure.

4.13 A PSInsar feasibility study of the Illinois Basin-Decatur site may be undertaken in the first half of Phase III Year 3 funded directly by the Carbon Capture Project. TRE will carry out this study over an approximately 5 km by 5 km area to determine if a full-scale assessment of ground inflation due to injection over three years is feasible given the surface characteristics of the site. Preliminary evaluation suggests that such a full assessment would likely be possible. The need for installation of purpose-built reflectors vs. use of existing infrastructure will be evaluated during the feasibility study. The execution of the subtask is totally dependent on allocation of

funds by the CCP project.

4.14 Participate in International Technology Transfer Events

The MGSC will participate in international conferences and technology transfer events in support of DOE's international collaboration initiatives to inform the international community of MVA activities and achievements and to share lessons learned.

5. Well Drilling and Completion

5.1 Develop detailed plan for drilling including Health, Safety, and Environment

Detailed plans will be developed for the drilling (including HSE) and completion process. The development of the drilling and completion process will be focused on meeting or exceeding IEPA UIC Class I (non-hazardous) requirements for data collection and well completion. The drilling program will include wellbore size, depths of surface and intermediate casing(s), and injection casing. Operationally, the drilling program will include mud density and additives anticipated to be required for lost circulation zones, drill bit types and sizes, coring bits and barrel specifications, planned DSTs, and log suites and intervals. The drilling program will include a description of the cementing procedure and will include types of cement and procedure for pumping and placing cement

5.2 Develop detailed plan for open-hole data collection

Detailed plans will be developed for open-hole data collection. The open-hole data collection will be based on the site characterization and modeling needs determined from Task 4; however, additional data may be necessary to meet permitting requirements and drilling program objectives.

5.3 Develop detailed plan for casing and cased-hole data collection

Detailed plans will be developed for cased-hole data collection. The cased-hole data collection will be based on the site characterization and modeling needs determined from Task 4; however, additional data may be necessary to meet permitting requirements and drilling program objectives. The compiled plans developed under Subtasks 5.1-5.3 will be submitted to DOE as a Topical Report.

5.4 Drill and case injection well

The injection well will be drilled and cased according to the UIC and drilling permits. This activity will be completed after approval of NEPA, appropriate permits, and availability of a drill rig.

5.5 Compare data to pre-drill assessments and validate site

A comparison study will be conducted to assess pre-drill characterization and post-drill data. Site validation will be based on findings. Data from this comparison will be used in a Completion Report, which is required by the IEPA for the final approval to operate a UIC Class I (non-hazardous) injection well. A copy of this report will be provided to the DOE as it is submitted to IEPA.

5.6 Develop detailed plan for well completion

A completion plan consisting of perforated interval, number, size, and depth of perforations, and frequency (shots/foot) and phase (orientation) will be developed from the analysis flow model results using the updated, detailed characterization of the Mt. Simon. The updated model will refine the pre-drilling models based on the newly acquired data from the injection well. A copy of the plan will be submitted to DOE which also highlights any differences between the initial model results and post drill characterization results.

6. Infrastructure Development

6.1 Prepare plan for integrated capture and injection operations including HSE

An infrastructure development plan will be created that defines and includes operating and injection systems, optimization studies to evaluate equipment capabilities and costs, and procurement of equipment. Injection operations plans will include developing basis-of-design documents detailing maximum and minimum operating pressures, temperatures, flows, dehydration specifications, control scheme, utility requirements, and other process-design specifications.

6.2 Determine equipment needs for capture, dehydration, and compression

The actual optimal equipment configuration will be determined after obtaining composition data for the planned inlet stream, reviewing site specific requirements, and specific requirements for

purity of the CO_2 to be sequestered. This subtask will include:

- The preparation of an optimization study to evaluate tradeoffs between compressor types (e.g. screw vs. reciprocating), cost, turn-down capability, sparing, reliability, maintenance, capital vs. operating costs, etc.
- Preparation of a process design package (PDP) including process and instrumentation diagrams, major equipment list and sizing, equipment specification sheets for major equipment and control valves, material and energy balances, process description, controls description, utility requirements, and piping tie-ins, preliminary line sizing, and insulation requirements.
- Specification of data acquisition equipment, CO_2 metering equipment, and other process instrumentation needed to meet the test objectives.

6.3 Finalize costs and delivery times for selected equipment

Upon receipt of vendor bids, equipment purchases or leases will be finalized in coordination with ADM. This process will include: reviewing vendor bids, preparing recommendations on accepting bids, negotiating with equipment suppliers, evaluating proposed changes to specifications from vendors, and responding to technical questions from vendors.

6.4 Deliverable – Submit development operations and closure plan to DOE

The Site Development, Operations, and Closure Plan will be finalized and submitted to DOE as a Topical Report and with project continuation application at the end of the first year of Budget Period 4 so that injection operations can begin at the beginning of the second year of Budget Period 4.

6.5 Order capture, dehydration, and compression equipment (10-12 months for receipt)

Capture, dehydration, and compression equipment will be purchased or leased. Bids will be collected and reviewed by both ISGS and ADM prior to issuing contracts.

6.6 Receive, install, and test equipment

Equipment will be received, installed, and tested with on-site process engineering support. This subtask will occur around the middle of the first year of BP4. Analysis of operations and

troubleshooting will occur during this subtask.

6.7 Determine pipeline, pipeline installation, and wellhead-wellsite equipment requirements

Pipeline, pipeline installation, and wellhead-wellsite equipment requirements will be determined and bids requested and reviewed by ISGS and DOE prior to issuing purchase agreements.

6.8 Finalize costs and delivery times for selected equipment

Upon receipt of vendor bids, pipeline and wellhead purchases will be finalized. This process will include: reviewing vendor bids, preparing recommendations on accepting bids, negotiating with equipment suppliers, evaluating proposed changes to specifications from vendors, and responding to technical questions from vendors.

6.9 Order pipe, valves, and related transportation equipment (6 months or more for receipt)

Pipe, valves, and related transportation equipment will be ordered in capture, dehydration, and compression equipment will be purchased or leased. Bids will be collected and reviewed. This subtask will take place during Budget Period 3 and early Budget Period 4

6.10 Receive, install, and test equipment

Upon receipt of pipe and pipeline related equipment, the installation and testing of equipment will take place.

6.11 Modify, as required, and finalize plan for integrated capture and injection operations including HSE

A final plan for integrated capture and injection operations including HSE will be developed.

6.12 Full-system operation testing and functional verification

A test of the complete operation for integrated capture and injection will be conducted for verification of full functionality.

6.13 Develop a Blowout Contingency Plan

Loss of control of the injection well may result from factors beyond the control of project participants, such as failure of a wellhead component or deliberate physical damage inflicted on

the wellhead, resulting in an uncontrolled release of carbon dioxide and/or formation water. A contingency plan for such an event will be developed by experts with appropriate experience. The plan may be fully or partially implemented, depending upon the scope of a loss-of-control event and the risk to surrounding persons and property.

7. CO_2 Procurement

7.1 Deliverable – Submit finalized procurement contract to DOE

A finalized procurement for CO_2 will be submitted to DOE during the first year of Budget Period 4. The CO_2 source will be the ADM ethanol fermentation facility located in Decatur, IL. The ethanol plant is located within a large corn processing facility near the north side of the site. This ethanol plant produces a relatively pure CO_2 byproduct stream that will be captured. The CO_2 source, compression, and dehydration facilities and injection well will all be located on ADM property. Because of the relationship with ADM, the ethanol plant source of CO_2 is unlikely to change. As such, CO_2 purity and types of impurities, well sites, and facility infrastructure will change very little from those anticipated. Slight variations that may occur may be based on commercial decisions by ADM, but these are not projected to present any adverse risk to the sequestration project. Nevertheless, projected cost and transportation requirements will be submitted to DOE in the CO_2 Procurement Plan and Agreement. The final contract will be included in the latter document.

8. CO_2 Transportation and Injection Operations

8.1 Implement operational monitoring plan

The operational monitoring plan will be implemented at the beginning of the second year of Budget Period 4.

8.2 Inject CO_2 on an operational basis

Injection of CO_2 is scheduled to begin at the beginning of the second year of Budget Period 4. All equipment, monitoring activities and plans for updating the reservoir model should be fully functional at this point.

8.3 Review and revise operational monitoring and injection schedule as needed

The operational monitoring plan and injection scheduled will be reviewed periodically throughout Budget Period 4, and revised as needed. DOE will be advised as to changes in the operational plan and injection schedule.

9. Operational Monitoring and Modeling

9.1 Update monitoring objectives and conduct modeling

The monitoring objectives will be updated in the beginning of the second year of Budget Period 4 as injection commences. Modeling will also be conducted during this period. As part of the Site Characterization, Modeling, and Monitoring Plan developed in Task 4, the monitoring plan will be dynamic such that different types of monitoring will be used to detect early movement of CO_2. Based on the information collected from the early monitoring, secondary or confirmation MVA techniques may be used, depending on budget constraints, all of which will be used to verify model predictions made prior to CO_2 injection.

The modeling components in the MVA program will help to predict the response of the target formation to CO_2 injection, to assess transport of any leakage to the biosphere, and determine potential risks. Comparison of model predictions to field data will highlight those parameters that significantly deviate from modeled projections, allowing the MVA program to be dynamic so that it can address risks and provide additional monitoring when and where needed. Overall improvement in predicting the fate of the CO_2 will be improved with field tested and calibrated models.

9.2 Conduct operational monitoring

With respect to active CO_2 injection, MVA activities include pre-, active, and post-CO_2 injection activities over the entire nine years of Phase III. Task 9 (Narrative) describes the MVA efforts during active CO_2 injection. The operational component will provide information on the injection formation, its response to CO_2 injection, and the migration of the CO_2 plume within the injection formation.

9.3 Drill, case, and complete one verification well

The verification and monitoring well will be drilled and cased. As the verification/monitoring well is drilled, completed and tested, the monitoring program will expand to include this

additional well. The verification well will provide information to determine the fate and transport of CO_2 within the injection formation that will help validate models used to predict the movement of CO_2.

9.4 Verification well to host coring and data collection for assessment of Lower Paleozoic carbonates

We will coordinate with a project newly-funded by DOE to assess the Cambro-Ordovician carbonate and shale strata across the Illinois and Michigan Basins for reservoir-seal combinations that may be used for geological carbon sequestration. New cores will be acquired in the verification well at the Decatur site, including three 30-ft cores from the Knox, two cores from a possible seal within the Knox, and additional core in or near the lost circulation zone discovered in the injection well. The verification well will host these activities as it is drilled to monitor the Mt. Simon and zones above the Eau Claire.

9.5 Assess and integrate well results and continue MVA

Data from the verification and monitoring wells will be assessed and integrated into the MVA plan as more data is collected and the MVA program continues throughout Budget Periods 4 and 5. Topical Report – Revised MVA plan will be submitted to DOE at the midpoint of BP4.

10. Site Closure

10.1 Secure wellbore, wellhead, pipeline, and related facilities

As part of the Site Development, Operations, and Closure Plan developed in Task 6, if ADM or another company is not interested in pursuing commercialization of the injection well, the well will be closed according to IEPA UIC regulations (a closure plan is also required for the UIC application). The plan includes type and number of plugs, location of plugs and installation procedures. Various tests are required to provide evidence to IEPA that the well is properly closed. These tests include pressure tests, radioactive tracer surveys, and specific cased-hole logs (e.g. noise and/or temperature). IEPA requires a 60 day notice of closure. Topical Report – A report summarizing the final disposition of the well and closure operations (including options for continued operation by ADM) will be submitted to DOE with the continuation application for BP5.

11. Post Injection Monitoring and Modeling

11.1 Define post-injection monitoring objectives

Post-injection monitoring objectives will be developed based on analysis of the results and effectiveness of the active injection monitoring techniques. In-zone and out-of-zone modeling will be conducted to test the viability of various monitoring methods to meet the post-injection objectives.

11.2 Carry out modeling to validate objectives

Modeling will be conducted in the middle of Budget Period 4 to validate project objectives.

11.3 Create a post-injection monitoring plan/review plan/approve plan

The post-injection monitoring plan will be developed and a schedule of testing and sampling will be developed. The post injection monitoring plan will be dynamic such that primary monitoring techniques will be used on a regular basis, and when these techniques indicate a scenario that may have high risk, secondary monitoring techniques may be implemented to verify the primary technique indicators. The post-injection monitoring techniques will likely be the same as the active injection monitoring techniques and may include well logs, pressure and temperature measurements, seismic data, earth resistivity and electromagnetic induction geophysical, color infrared imagery, and other types of measurements. Topical Report – The Post injection monitoring plan will be submitted to DOE with the submission of the continuation application for BP5.

11.4 Implement monitoring plan

The post-injection monitoring plan will be implemented at the end of Budget Period 4 and carried out through the end of Budget Period 5.

12. Project Assessment

12.1 Develop evaluation and assessment criteria

Evaluation and assessment criteria will be developed for evaluating the viability of operating a commercial-scale sequestration site completed in the Mt. Simon Sandstone in the Illinois Basin.

12.2 Carry out assessment in collaboration with site host

In conjunction with ADM, an evaluation and assessment of the methodologies employed during the project will be made in order to understand all issues necessary to develop and operate a commercial scale sequestration site completed in the Mt. Simon Sandstone in the Illinois Basin. This evaluation will include contrast and comparison of monitoring techniques, models and model assumptions, well design and completion, and capture and transportation alternatives. The final project assessment will be a recommended sequestration plan (from capture to injection to monitoring) for ethanol plants; however, the sequestration of CO_2 for other types of CO_2 industrial sources, other geologic sinks, and geographical areas with the boundaries of the Illinois Basin is also of interest.

13. Post-Test Site Planning

13.1 Define commercial opportunities for post-test site and facilities

Commercialization of the test site following the DOE-funded portion of this project will be considered through all of the plans and tasks leading up to the site closure. This Phase III project may, in effect, provide a field-tested sequestration site suitable for ADM or a third party to take over and continue sequestration operations.

13.2 Prepare site commercialization plan

During Budget Period 5, a commercialization plan will be developed to identify key areas that would improve the likelihood of extending the life of the sequestration facility beyond DOE Phase III.

13.3 Deliverable – Submit Site Commercialization Plan to DOE

The Site Commercialization Plan will be submitted to DOE during Budget Period 5.

14. Project Management

14.1 Deliverable – Submit Project Management Plan to DOE

The MGSC will submit a Project Management Plan within 90-days of the start of the project, that serves as the baseline for tracking project performance. A template will be provided by DOE to ISGS for the development of this plan. The plan will be updated as a result of the revisions to the

structure of Budget Period 4.

14.2 Deliverable – Submit Quarterly Milestone Report to DOE

Quarterly reports updating progress on the project milestones and risks will be submitted quarterly (the last day of the month) throughout Budget Periods 3, 4, and 5.

14.3 Deliverable – Submit Project Spend Plan to DOE

A Project Spend Plan will be submitted to DOE on within 90 days of the project beginning.

14.4 Deliverable – Submit Quarterly Project Cost Reports to DOE

Quarterly Project Cost Reports will be submitted to DOE within 30 days of the close of the quarter throughout Budget Periods 3, 4, and 5.

14.5 Deliverable – Submit Annual Project Assessment Report to DOE

An Annual Project Assessment Report will be submitted to DOE at the end of each year of the Phase III project.

14.6 Participate in International Technology Transfer and Networking Events

The MGSC will participate in international conferences and technology transfer events in support of DOE's international collaboration initiatives to inform the international community of MGSC activities and achievements and to share lessons learned.

D. DELIVERABLES

1. CO_2 Procurement Plan and Agreement – Subtask 7.1

The MGSC will provide a final contract agreement and plan to procure CO_2 for the injection test with guarantees from ADM that the CO_2 will be available for the injection project. This will be done once equipment is installed, tested, capital costs are near-final, and operating costs are defined.

2. Site Development, Operations, and Closure Plan – Subtask 6.4

The MGSC will provide a report describing the details of site development, operations, and site

closure. The report will identify all major activities, roles, responsibilities, and environmental health and safety issues.

3. Permitting Action Plan – Subtask 3.7

The MGSC will provide a Permitting Action Plan that identifies all necessary permits, agencies, and information required for each permit. The plan will provide a schedule of application submissions and targeted approval dates and contact persons for each permit.

4. Site Characterization, Modeling, and Monitoring Plan – Subtask 4.3

The MGSC will provide a plan (or plans) detailing the site characterization methods, models and applications, and monitoring methods to be used to validate models. The plan will describe how the characterization will be used to support and refine model simulations.

5. Project Management Plan – Subtask 14.1 and 14.2

The MGSC will create a project management and risk management plan according to the requirement provided by DOE and report on the plan milestones and risks every quarter. The MGSC will provide a list of quarterly milestones for Budget Period 3. Lists of annual milestones for Budget Periods 4 and 5 will be provided. The Project Management Plan will be updated given the new timeline for Budget Period 4.

6. Project Costed and Spend Reports – Subtask 14.3 and 14.4

The MGSC will provide an up-to-date cost and spend plan for the third budget period by quarter. An updated costed report will be sent to the COR and CS within 30 days of the end of each quarter using the DOE template.

7. Annual Project Assessment – Subtask 14.5

The MGSC will submit an annual assessment report reporting on the progress toward meeting project goals.

8. Site Commercialization Plan – Subtask 13.3

The MGSC will submit a commercialization plan in Budget Period 5 describing the opportunities

for the commercialization of the site and similar sinks in the region.

9. CO_2 EOR and Storage Performance Curves – Subtask 1.12

The MGSC will submit four documents: 1) Design of General CO_2 EOR Oilfield Facilities, 2) Procedure for Calibrating CO_2 EOR Performance Curves from Geologic Models, 3) Application of Performance Curves to Project CO_2 EOR, and 4) Updated MSGC CO_2 EOR and Storage Estimates for Illinois Basin.

10. Topical Reports – Eight topical reports will be submitted for project activities as follows: Topical Report 1: subtasks 1.3, 1.5, and 1.7; Topical Report 2: subtask 3.6; Topical Report 3: subtasks 4.1-4.2; Topical Report 4: subtasks 5.1-5.3; Topical Report 5: subtask 6.4; Topical Report 6: subtask 9.5; Topical Report 7: subtask 10.1, and Topical Report 8: subtask 11.3.

E. BRIEFINGS/TECHNICAL PRESENTATIONS

Research scientists and MGSC partners will prepare detailed briefings to be delivered to the Project Officer at the Project Officer's facility located in Pittsburgh, PA or Morgantown, WV, as required. The briefings will explain the plans, progress, and results of the project. Updates will occur at the project kick-off meeting, annual briefings, and the final project briefing. The MGSC will also present technical papers at the DOE/NETL Annual Contractor's Review Meeting at NETL's facility located in Pittsburgh, PA or Morgantown, WV, and other technical conferences each year, as approved by the NETL Project Officer/Manager. Multiple presentations will be made each year at the annual DOE carbon capture and sequestration conference.

Appendix B: Trimeric Design Reports

TECHNICAL MEMORANDUM

SUBJECT:	**Process Design Basis for CO_2 Injection Surface Facilities**
PROJECT:	**An Assessment of Geological Carbon Sequestration Options in the Illinois Basin: Phase III**
PREPARED BY:	**Trimeric Corporation**
PREPARED FOR:	**Illinois State Geological Survey**
DRAFT REVISION DATE:	**09/22/2008**

This document defines the functional design requirements of the surface facilities for compressing and dehydrating the carbon dioxide prior to injection. This document is critical to the success of the project and should be reviewed carefully and approved by all stakeholders prior to finalizing the design of the surface facilities. The overall purpose of clearly establishing the design basis is to ensure that the surface facilities will meet the experimental requirements of the project in terms of operational flexibility, reliability, and performance.

Some of the key issues addressed herein include defining requirements to operate at injection rates other than the design maximum and defining whether or not the system needs to be able to control the temperature, pressure, or phase state of the CO_2 at any location from the wellhead to the bottom of the well. The purity specifications of the CO_2 in terms of maximum water, hydrogen sulfide (H_2S), and noncondensible gas content are also important in establishing what equipment and materials of construction are needed to meet these secondary requirements.

This document is organized into the following six sections:

- Ambient conditions;
- Availability of utilities;
- CO_2 source characteristics;
- Process design parameters;
- Process monitoring requirements; and
- Reliability and operability requirements.

1.0 AMBIENT CONDITIONS

The ambient conditions for Decatur Illinois are shown in the following table. These conditions will primarily affect the detailed sizing of after coolers, separators, fan motors, insulation, and other items similarly affected by ambient conditions.

Table 1. Ambient Conditions at Decatur Illinois

Ambient Condition	Design Value
Elevation	673 ft (as per USGS website)
Ambient Barometric Pressure	14.3 psia based on elevation
Design Dry Bulb Maximum (97.5 percentile)[1]	91 °F
Design Dry Bulb Minimum (2.5 percentile)[1]	2 °F
Coincident Design Wet Bulb[1]	74 °F

[1]Source: "Manual N: Load Calculation for Commercial Summer and Winter Air Conditioning", 4th Ed., Air Conditioning Contractors of America

2.0 AVAILABILITY OF UTILITIES

The compression and dehydration facilities will use significant amounts of electricity, cooling water, and other utilities. These requirements and their availability at the site are summarized below in Table 2.

Table 2. Utility Requirements and Availability

Utility	Estimated Requirement	Availability?
Cooling water	Estimated approximately 25 million Btu/hr of cooling is required, corresponding to approximately 3300 gallons/minute (gpm) cooling water at 85 °F supply and 100 °F return. Alternately, air-cooled exchangers could also be used.	Yes, excess cooling water is available.
Process Heat	Approximately 300,000 Btu/hr of process heat is required for the glycol dehydrator. This could be supplied with fuel gas, propane, steam or hot oil. Typically, glycol dehydrators are fired with fuel gas or propane.	Hot oil is not available. 175 psig steam and fuel gas are available, but a steam line or fuel gas line would have to be run to the plant. Consensus is that it would not be economical to run a steam line for just 300 lb/hr steam. Fuel gas and/or propane are both available.
Electricity	480 V or 4160 V, 3-phase, approximately 5 – 6 MW	Yes, electricity is available.
Instrument air	To be estimated during detailed design.	Instrument air is available, but it may be more economical to put in a small dedicated instrument air system or use dry CO_2 rather than run instrument air lines from the existing supply over to the compression and dehydration equipment.
Process air	Not required for the process, other than for maintenance – e.g., operation of air tools, blowing lines out after pressure tests.	Not applicable
Plant water	Not required, other than for equipment washdown or flushing lines.	Not applicable
Wastewater treatment	Approx 4000 gal/day condensed water from CO_2 compression discharge coolers. The water will contain traces of compressor lube oil.	Yes, this condensed water will be disposed of in the plant's existing wastewater treatment system.

3.0 CO_2 SOURCE CHARACTERISTICS

The CO_2 source for this project is the fermenter vent gas from ADM's ethanol plant. The CO_2 is generally of high purity and will be taken downstream of an existing water scrubbing system. The compression and dehydration facility will be designed to operate based on the composition given in Table 3 below.

Table 3. Typical CO_2 Composition[1]

Component	Typical Analysis (ppmv unless otherwise noted)
Carbon Dioxide	99.98 (vol %, dry basis)
Total Hydrocarbons	120
Nitrogen	110
Acetaldehyde	82
Ethyl Acetate	19
Ethanol	12
Hydrogen Sulfide	7.9
Oxygen	7.0
Isoamyl Alcohol	5.4
Isoamyl Acetate	2.9
Methanol	2.1
Isobutanol	1.7
Methane	0.7
Dimethyl Sulfide	0.6
Acetone	0.2
n-Propanol	0.2
Methyl Mercaptan	0.14
Carbon Disulfide	0.09
Carbonyl Sulfide	0.07
Ethyl Mercaptan	0.04

[1]Data provided by ADM in February of 2007.

The maximum temperature of the source CO_2 is 95 °F, and the pressure varies from 0 psig to about 0.5 psig. For the purposes of design, the CO_2 will be assumed available at 0 psig minimum and 95 °F maximum at the point where it is diverted from the existing CO_2 vent line.

The CO_2 composition is known to vary during upset conditions. Three types of upset conditions are known to occur:

- Air Leakage: If pressure control is lost on the fermenters, air may enter the system and contaminate the CO_2 stream.
- Water Scrubber System Upset: If the water scrubber system is upset the ethanol concentration in the CO_2 stream can climb to 6 mole percent.

- Fermenter Upset: On rare occasions during fermenter upsets, the hydrogen sulfide (H_2S) concentration can climb to 100 ppmv. It is possible that this type of upset could last for 2 or 3 months.

4.0 PROCESS DESIGN PARAMETERS

This section defines the major process design parameters for the compression and dehydration facilities and is organized into the following sections:

- General capacity requirements;
- CO_2 purity specifications for delivery to the injection well;
- Delivery requirements for flow, pressure, temperature, and phase condition; and
- Special shutdown or startup requirements

General Capacity Requirements

The surface facilities must be capable of delivering 1 million metric tons (dry basis) of CO_2 over a three year period. The compressor and dehydrator will be designed for 24-hour operation, with no more than 30 days equivalent downtime per year. This requirement leads to a minimum specified design rate of 995 metric tons per day for the compression and dehydration equipment.

Note: 1 million metric tons = 995 metric tons/day X (365 – 30) days/year X 3 years

CO_2 Purity Specifications for Delivery to Injection Well

The CO_2 purity specifications are given in the following table.

Table 4. CO_2 Purity Specifications at the Injection Well

Component	Purity Specification
Carbon dioxide	Minimum 99 %; the plant will be shut down if air is detected in the feed gas.
Nitrogen	500 ppmv maximum; no equipment will be provided to remove nitrogen; the plant will be shut down if air is detected in the feed gas.
Oxygen	100 ppmv maximum; no equipment will be

	provided to remove oxygen from the feed gas; the plant will be shut down if air is detected in the feed gas.
Hydrogen sulfide	There is no requirement to remove H_2S. H_2S in the feed gas will also be present in the injected gas.
Lubrication oils	There is no requirement to remove trace amounts of lubrication oils
Triethylene glycol	There is no requirement to remove trace amounts of triethylene glycol
Water	30 lbs/MMscfd (630 ppmv) maximum

Note: The only constituent to be removed from the raw fermenter gas is water. All other contaminants in the raw fermenter gas will pass through the system and be present in the injected CO_2, along with traces of other materials introduced from the compression and dehydration equipment (e.g. lubrication oil and triethylene glycol).

The minimum CO_2 content of 99 % is somewhat arbitrary. The CO_2 source is normally much purer than 99%. Therefore, if the purity drops below 99 % it is indicative of some upset condition allowing air to enter the system such as loss of fermenter pressure control. Similarly, the maximum nitrogen and oxygen limits are chosen to be indicative of an upset condition allowing air to enter the system.

There is no process limit specified on the amount of H_2S in the CO_2. The expected normal concentration of H_2S is about 8 ppmv, and during upsets this can climb to around 100 ppmv.

Trace amounts of lubrication oils or triethylene glycol may be present in the injected CO_2. There is no limit specified, but standard industry practice of using mist-eliminating devices in the CO_2 stream is expected to result in less than 5 ppm (by weight) of entrained liquid contaminants such as oils and glycols.

A maximum water content of 30 lbs/MMscf (630 ppmv) has been specified to prevent liquid water and/or hydrates from forming. This specification will require the use of a TEG or mole-sieve dehydrator system. A TEG dehydrator will normally produce CO_2 with a water content of 7 lbs/MMscf or lower. A mole sieve system will produce CO_2 with even lower water contents, less than 1 lb/MMscf. The basis for setting this specification at 30 lbs/MMscf is that it is typical of what might be specified for a commercial CO_2 pipeline transporting CO_2 for enhanced oil recovery or sequestration purposes. The TEG dehydrator will be designed to delivery CO_2 with a water content of 7 lbs/MMscf to provide a margin of safety below the specification of 30 lbs/MMscf.

It is technically feasible to set the specification at a higher level and avoid the requirement to provide dehydration equipment. However, this could result in the formation of liquid water, ice, or hydrates in the CO_2 line and well tubing under some operating conditions (especially during start-up or shut down) unless special measures

were taken to avoid this. For example, heat tracing and insulation or hydrate/water inhibitors such as methanol are sometimes employed for this purpose. If liquid water were allowed to form in the pipeline, then carbon steel would not be suitable for the pipeline. Given the experimental nature of this project, with the accompanying need for maximum operational flexibility, the water specification was set at 30 lbs/MMscf to eliminate any concern over water, ice, or hydrates forming in the CO_2 line under any operating conditions including start-up or shut-down.

Delivery Requirements for Flow, Pressure, Temperature, and Phase Condition

The delivery requirements for flow, pressure, temperature, and phase condition are summarized in the following table. In addition to defining the functional requirements of the injection/dehydration system, these specifications also define the operating limitations of the system.

Table 5. Delivery Requirements for CO_2 Flow, Pressure, Temperature, and Phase Condition

Delivery Parameter	Project Design Requirement
Delivery Flow	Must deliver up to 995 metric tons/day or greater
Flow Turndown	Able to inject at rates ranging from 250 – 995 metric tons/day
Flow Control	Maintain within 10 % of target flow
Maximum Wellhead Inlet Pressure	1350 – 2000 psig
Minimum Pressure	During startup: 0 psig – 1071 psia, During normal operations: 1071 psia.
Pressure Control	No specific requirement.
Maximum Temperature	120 °F
Minimum Temperature	88 °F
Temperature Control	No specific requirement, other than to maintain between 88 and 120 °F at the wellhead.

Each of the specifications in the above table and their rationale are discussed below.

- CO_2 Delivery Flow: As previously discussed, the injection equipment is required to supply at least 995 metric tons per day.

- CO_2 Flow Turndown: The system is required to deliver CO_2 to the injection well at any specified flow rate from 250 – 995 metric tons/day. This range was requested by ISGS to allow experimental flexibility over injection rates.

- CO_2 Flow Control: The system is required to maintain CO_2 flow to within +/- 10 % of the targeted flow rate. For example, if a steady-flow test is being conducted at an injection rate of 500 metric tons/day, then the system must be able to control the flow to between 450 and 550 metric tons/day during that test. This range was set based on expected typical performance of compression systems operating at steady flow conditions and typical accuracy and performance of standard flow control equipment.

- CO_2 Maximum Delivery Pressure: The system must be capable of delivering CO_2 at a maximum pressure of between 1350 and 2000 psig at the wellhead. The lower limit of 1350 psig is based on a compressor discharge pressure of 1400 psig with an allowance for up to 50 psi pressure drop through the final discharge cooler and pipeline. (Special note: the compressor will be specified to deliver CO_2 at up to 1400 psig. If higher pressures are required, as determined by ISGS, then a booster pump will be used to reach the final required pressure. This approach is being taken since the exact pressure specification will be defined after the injection well is drilled and data are available.)

- Minimum CO_2 Delivery Pressure Required: During startup, the system must be designed to accommodate the increase in injection wellhead pressure from 0 psig during initial startup up to the final operating pressure during normal operation. During normal operation, the system must be capable of delivering CO_2 to the wellhead at pressures of at least 1071 psia which is the minimum allowable wellhead pressure for injection as specified in the permit..

- Pressure Control: There is no design requirement to maintain control over pressure beyond just meeting the specification for minimum and maximum noted above. For example, if the wellhead pressure naturally settles out at 1500 psig during injection, the system would not be required to or be capable of controlling the wellhead pressure to between 1200 and 1250 psig. The pressure at the wellhead will generally be determined by the reservoir characteristics and not by the surface equipment. It is anticipated, however, that the pressure will remain relatively steady during steady-state injection at a constant injection rate.

  The system operating procedures will allow us to minimize rapid pressure changes during startup and shutdown to less than 50 psig per minute. It may not be possible in all cases to meet this requirement though. For example, if there is a sudden loss of power at the plant and the compressor shut down, the wellhead pressure could drop rapidly, and the pressure drop could exceed 50 psig per minute.

- Maximum CO_2 Delivery Temperature Allowed at Injection Wellhead: 120 °F. This temperature is typical for design of air-cooled heat exchangers during

summer conditions. Actual temperatures will likely be less than 120 °F, especially if water-cooled exchangers are used to cool the CO_2.

- Minimum CO_2 Delivery Temperature Allowed at Injection Wellhead During Injection: 88 °F: This temperature was selected based on the parameter limits in the injection permit. During cold-weather start-up and shut-downs, the CO_2 could be colder than 88 °F at the wellhead immediately after startup.

- Temperature Control: There is no requirement to maintain temperature between a specified range, other than between the minimum and maximum temperatures listed above. For example, there is no requirement to deliver CO_2 at between 100 and 110 °F. However, the CO_2 temperature is expected to remain fairly constant if the cooling water supply temperature is maintained at a constant 85 °F.

Special shut down or start up requirements

The design will include provisions for ensuring that ADM's CO_2 vent and controls will work properly in the event that the CO_2 compression system goes down and CO_2 is diverted from the compressors back to the existing CO_2 vent system at the facility.

5.0 PROCESS MONITORING REQUIREMENTS

The control system will be designed with capability for automated acquisition and logging of selected key process data. A list of the process variables requiring monitoring and frequency of data sampling will be developed as part of the process design stage, along with data quality objectives including any requirements for accuracy and quality assurance of process data acquisition instrumentation. Some of the key data (subject to approval by ADM) will be available for remote monitoring via the internet.

A custody transfer meter will be required to measure the CO_2 delivered to the well for cost accounting and experimental research purposes.

6.0 RELIABILITY AND OPERABILITY REQUIREMENTS

Shutdowns for scheduled maintenance or unplanned downtime – The overall project requirement for meeting CO_2 injection goals requires no more than 30 days downtime per year. Actual expected total downtime for maintenance and unscheduled repairs is expected to be much less than 30 days per year.

Sparing of equipment – No major equipment (compressors or dehydrators) will be spared. However, ISGS/DOE may decide to provide "shelf" spares for some of the compression equipment. Minor higher-maintenance or critical equipment such as glycol

pumps or instruments will likely be spared. Details of spared equipment will be developed in the process design stage.

Automation of controls – The CO_2 compression and dehydration equipment will be designed for fully automated operation. Alarms and shutdowns will be provided for certain conditions such as loss of moisture control, high contaminant concentration, high/low pressure, temperature, flow, or vessel level control conditions. Operators will monitor the plant and respond to alarms as needed.

1.0 Equipment Design Background

The Illinois Basin - Decatur Project is a large scale CO_2 sequestration demonstration project, led by the Midwest Geological Sequestration Consortium and funded by the U.S. Department of Energy. The host site is the Archer Daniels Midland facility in Decatur, Illinois.

The above ground process equipment design requirements were to compress and dehydrate a nominal 1,000 tonnes / day of 99% + pure CO_2 from ethanol plant fermenters and deliver it to an injection well for injection into a saline aquifer 7,000 feet underground. The CO_2 injection was planned for a three-year period, resulting in the injection of one million tonnes total.

2.0 CO_2 Delivery Requirements

The original CO_2 delivery requirements for injection rate, pressure, and temperature are summarized in Table 1.

Table 1: CO_2 Delivery Requirements

Operational Parameter	Project Design Requirement
Injection Rate	Able to inject at rates ranging from 250 – 995 tonnes/day
Flow Control	Maintain within 10 % of target flow
Maximum Wellhead Inlet Pressure	1,350 – 2,000 psig
Minimum Wellhead Inlet Pressure	During startup: 0 psig – 1,057 psig, During normal operations: 1,057 psig.
Pressure Control	Injection pressure is not controlled when the injection rate is specified
Maximum Wellhead Inlet Temperature	120 °F
Minimum Wellhead Inlet Temperature	88 °F
Temperature Control	Target set point after reciprocating compressors was 95 °F. Not controlled if multistage centrifugal pump is used, which adds 10 °F to 15 °F to CO_2 surface temperatures.

In addition to these operational parameters, Table 2 includes the purity specifications for the injection CO_2 stream.

Table 2: Injection CO_2 Purity Specification

Component	Purity Specification
Carbon Dioxide	Minimum 99 % vol.
Oxygen	100 ppmv maximum
Water	30 lb/MMscf (633 ppmv) maximum

3.0 Process Description of Installed Equipment

The Surface Facilities include compression and dehydration equipment that takes a water-saturated CO_2 gas stream from an ethanol plant wet scrubber discharge at approximately 90 °F and 0.5 psig and compresses the CO_2 to pressures up to 2,000 psig. The CO_2 is also dehydrated to typical CO_2 pipeline concentrations of ≤ 30 lb/MMscf or 630 ppmv at an intermediate step in the compression process. Compressed, dehydrated CO_2 at rates up to 1,100 metric tons/ day (21 MMscfd) can be delivered to the pipeline at pressures ranging from 1,300 to 2,000 psig and temperatures ranging from approximately 80 to 120 °F. CO_2 travels through approximately 6,400 feet of 6-inch diameter Schedule 40 pipe from the Surface Facilities to the injection well. A process flow diagram (PFD) is shown in Figure 1.

The equipment consists of a single 1,250 hp centrifugal booster blower that raises pressure to approximately 17 psig, followed by two parallel 3,250 hp 4-stage reciprocating compressors that boost the pressure to 1,400 psig, a dehydration unit, and a 200 hp multistage centrifugal pump that can boost the pressure to up to 2,000 psig if necessary. Triethylene glycol (TEG) dehydration is performed between the third and fourth stages in the reciprocating compressors where water content in the CO_2 is at a minimum due to previous compression and cooling steps and the pressure is still low enough to prevent unacceptably high losses of TEG into the CO_2. Shell and tube heat exchangers using cooling water remove the heat of compression following each compression step, except after the multistage centrifugal pump which has minimal temperature rise (10 °F to 15 °F).

The compression train receives the relatively low pressure CO_2 stream from an existing primary water scrubber in the ethanol plant. The gas enters an inlet separator where any free water carry-over from the scrubber is allowed to drop out. The stream enters the blower, where the CO_2 pressure is increased by approximately 17 psi. The gas stream is then cooled by a shell and tube gas cooler. The CO_2 stream then enters the blower after-cooler separator where any condensed water is allowed to drop out.

The overhead stream from the blower after-cooler separator is split and enters the suction of two parallel 4-stage reciprocating compressors. A shell and tube cooler follows each stage of the reciprocating compressors. Compressed and cooled CO_2 from the third stage of both reciprocating compressors combines and enters the dehydration unit inlet separator where condensed liquids disengage from the vapor stream. The CO_2 stream then enters the bottom of the contactor where it is contacted counter currently with the lean glycol that enters at the top of the contactor. The dry CO_2 exiting the top of the contactor is slightly heated in a gas/glycol exchanger (in order to cool the lean glycol) before splitting and returning to the 4th stage compressor suction scrubbers. A gas-fired regeneration unit removes the water from the TEG and returns lean (low water content) TEG to the contactor.

CO_2 flow to the wellhead is monitored and can be controlled in one of two ways, depending on the wellhead injection pressure. If the wellhead injection pressure is 1,400 psig or less, a control valve will control flow. If the wellhead injection pressure is greater than 1,400 psig, the flow controller will control flow via the variable frequency drive (VFD) on the multistage centrifugal pump. The water content and oxygen content of dehydrated gas stream are measured between the dehydration unit contactor outlet and the inlet to the fourth stage of the reciprocating compressors.

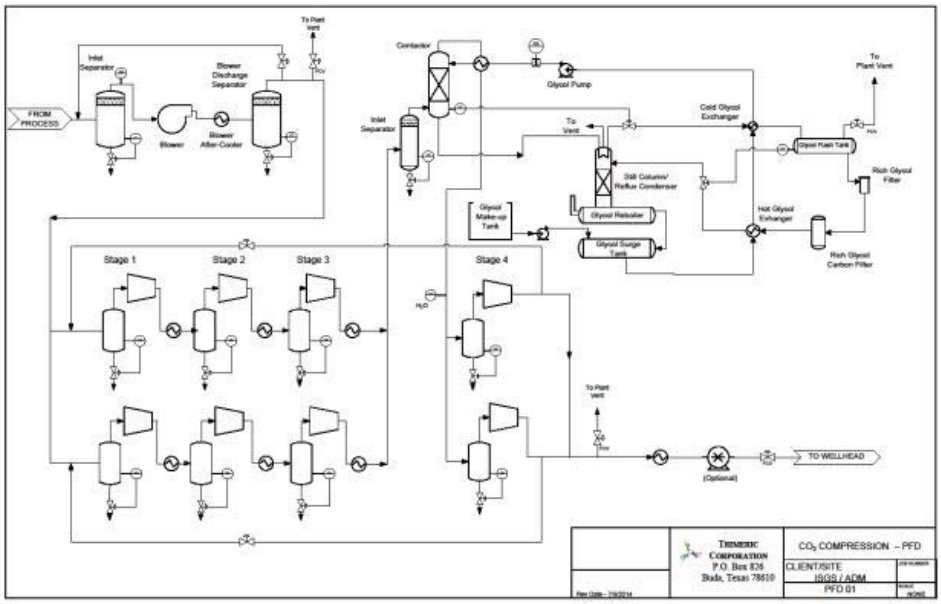

Figure 1 – Process Flow Diagram

4.0 Process Modifications after Startup

After the construction and startup of the CO_2 compression and dehydration equipment and the transmission pipeline, some equipment and process modifications were made in order to improve operations and reliability. The details of the lessons learned and the equipment and process modifications that were made to address them are listed below.

Equipment Warranty and Project Timing

Much of the equipment was ordered and shipped to the site long before the injection permit was received. Thus, the new equipment sat unused for several months. Most equipment suppliers have a warranty period that ends 12 months after startup or 18 months after equipment is shipped, whichever occurs first. Operational issues occurred with some of this equipment during commissioning of the unit. One example was the blower motor failure due to arcing in the motor windings. The repair was completed by the supplier at no cost to the project because the supplier covered the repair as a warranty item. The lesson learned was that it important to understand warranty language with respect to the length of warranty after delivery of the equipment as well as the length of time after start of equipment operation and for the end user to inform equipment suppliers of any long delays prior to startup in order to increase the possibility of preserving part of the warranty period.

Pipeline Insulation

Due to the existing facility infrastructure, it was not practical to install the 6,400 foot, 6-inch diameter pipeline underground. The pipeline was installed above ground and initially operated without insulation. It was known beforehand that ambient conditions would affect the CO_2 temperature and therefore the density of the CO_2 in the transmission pipeline, but the team decided to begin operations without insulating the pipeline in an effort to reduce project costs. The team began operations with the understanding that insulation might have to be installed at a later date if necessary for process control or to ensure compliance with permit conditions. Ambient conditions, particularly in wet winter weather, affected the CO_2 temperature and density at the wellhead inlet to the point that a lower surface injection pressure was required for a given injection rate in colder weather. As a result, the compression equipment control set points had to be modified to operate at lower discharge pressures. The variations in ambient conditions raised concerns that the surface injection temperature could drop below the 60 °F minimum temperature limit in the Underground Injection Control (UIC) permit and variations in the surface injection pressures also caused undesirable variations in the measured subsurface injection pressures. The pipeline was insulated in order to minimize the variations of the surface injection temperature and pressure and of the measured subsurface pressure.

Compressor Interstage Temperature Control

The shell and tube cooling water exchangers for the blower and compressors were designed for a cooling water supply temperature of 85 °F. The initial CO_2 temperature control set point was 95 °F, which is a 10 °F approach to the design cooling water supply temperature. During the initial months of operation, the cooling water supply temperature was much lower than 85 °F. This resulted in reduced flow rates of cooling water through the heat exchangers, which led to higher cooling water return temperatures. High cooling water return temperatures and a low water velocity through the exchangers increase the risk of corrosion and fouling inside the exchanger and in the cooling water return system. In order to minimize these issues, the CO_2 temperature control set points were lowered to 80 °F which increased the cooling water flow rate, except on the final cooler downstream of the reciprocating compressors. The low temperature alarm set point values were kept greater than 60 °F in order to avoid issues with CO_2-H_2O solid hydrate formation or the formation of liquid CO_2 at the higher pressures in the latter stages of the reciprocating compressors. The CO_2 temperature set point leaving the final cooler was kept at approximately 98 °F, which was achievable at all times regardless of daily or seasonal variations in cooling water supply temperatures. This helped to maintain a stable surface injection pressure.

Low Pressure Shutdown

The reciprocating compressors were experiencing low suction pressure shutdowns, particularly when there was a shutdown of the other compressor. The low suction pressure shutdowns were originally put in place in order to avoid situations where the differential pressure between suction and discharge of any stage is high enough to cause a high rod load situation. An alternative method to protect the system from high rod load was provided by the compressor vendor and the low suction pressure shutdowns were removed. The system controller now uses pressure indicating transmitter signals from each stage to calculate differential pressure and rod load, which is a function of the differential pressure and the cross sectional area of the piston and rod. The controller will shut down the compressor if the calculated rod

load exceeds 90% of the rated rod load. This change eliminated unnecessary compressor shutdowns that were due solely to low suction pressure.

Compressor Oil Carryover

A tar-like residue was observed on test equipment after it was removed from the injection well. Similar issues at other sites have been attributed to asphaltene materials caused by carryover of mineral based cylinder lubrication oil, which is the same type of cylinder lubrication oil currently used on this project. Analysis of the residue collected at this site indicated that it was an asphaltene material. The project team discussed the issue with the compressor supplier and they suggested that synthetic oil could be used for cylinder lubrication instead of mineral based oil. Use of synthetic oil would result in less carryover and less residue, but the cost of the synthetic oil is significantly higher. Since no significant issues due to the residue have been observed to date, mineral based oil continues to be used for cylinder lubrication at this time. It is possible to change to synthetic oil in the future if issues arise that justify the additional costs of modifying the compressors and using synthetic oil for cylinder lubrication.

Use of the Multistage Centrifugal Pump

During the design phase of the compression system, the state of knowledge regarding the formation was such that the surface injection pressure required to achieve the target injection rate was expected to be in the range of 1,400 to 1,950 psig. Since the compression equipment had to be ordered before the required injection pressure was more accurately known, the reciprocating compressors were designed to operate at a discharge pressure of 1,400 psig and a multistage centrifugal pump was installed downstream of the compressors for use in the event that higher pressure is needed to meet the desired injection rate. To date, the surface pressure needed to meet required injection rates has been at or below 1,400 psig, thus the multistage centrifugal pump has not yet been needed. Future use of the multistage centrifugal pump may be required to sustain desired injection rates if resistance from the formation increases or if the performance of the final cooler degrades so that temperature of the CO_2 in the transmission pipeline increases to the point that the density of CO_2 in the transmission pipe decreases, resulting in the need for a higher surface injection pressure to achieve the desired injection rate. Insulating the pipeline has made the latter more likely as warmer CO_2 in the pipeline will transfer less heat to the surroundings.

Nitrogen Purge System Modifications

An automated nitrogen purge piping was installed with the compressors to help remove wet (water saturated) CO_2 from the system following shutdown of the compressors. The CO_2 is very hot on the discharge side of each compression stage when the compressor is operating, so condensation of water is not possible and carbon steel is therefore used to reduce equipment costs. The blower system and the suction side of the compressors are made of stainless steel. The compressor manufacturer recommended purging the lines with nitrogen to prevent formation of free (liquid) water when the CO_2 cools in these lines after shutdown. Liquid water in the presence of CO_2 can cause severe corrosion in carbon steel systems. Furthermore, any free liquid water that formed on the suction side of a compression stage could cause damage if it entered the compression cylinder when the compressor is restarted and a nitrogen purge helps to reduce the chances that this problem could occur. The amount of nitrogen required during the automated purge cycle exceeded the facility supply capacity, which resulted in a disruption to other

users of nitrogen within the facility. Trimeric recommended installation of flow restriction orifices in the nitrogen purge lines to allow purging of the compression equipment without adversely impacting other plant operations that use nitrogen.

5.0 Summary and Conclusions

Monitoring is underway to track, maintain, and improve system performance over the remainder of the injection period. Trimeric is making quarterly visits to the site to review operations, to help identify process issues, to find opportunities for process optimization, and to support ADM and the Midwest Geological Sequestration Consortium during the remainder of the injection phase of the Illinois Basin-Decatur Project.

The compression and dehydration system for the Illinois Basin-Decatur Project is currently performing in accordance with process design. The flow rate of CO_2 from the system that is available for injection meets the nominal design criteria of 1,000 tonnes per day. Current performance suggests that one million tonnes of CO_2 injection will be completed within the three-year target for this project.

Conference Proceedings

Design, Startup, and Operation of a 50 MWe CO_2 Sequestration System

Abstract 351

Ray McKaskle, Kevin Fisher & Rosalind Jones – Trimeric Corporation

Scott Frailey – Illinois State Geological Survey

Table of Contents

1.0 Abstract
2.0 Project Background
3.0 Process Design Basis and Permit Conditions
4.0 Equipment Screening and Selection Process
  4.1 Equipment Screening
  4.2 Equipment Selection
5.0 Results and Lessons Learned
6.0 Comparison with 500 MWe Facility
7.0 Summary and Conclusions
8.0 Acknowledgements
9.0 Appendix

List of Figures

Figure 1 – Flow vs. Down-hole Pressure as a Function of Injectivity (PI) and Surface Pressure
Figure 2 – Process Block Flow Diagram
Figure 3 – Surface Facilities Process Flow Diagram
Figure 4 – Compression Path on CO_2 Phase Diagram
Figure 5 – Intersection of Blower and Reciprocating Compressor Curves
Figure 6 – Daily Injection Rates

List of Tables

Table 1: CO_2 Delivery Requirements
Table 2: Injection CO_2 Purity Specification

List of Appendices

Appendix 1 – Surface Facilities Equipment Photos

Photograph 1 – Blower and Compressor Buildings

Photograph 2 – CO_2 Source – Fermenter Wet Scrubber Discharge

Photograph 3 – Blower System

Photograph 4 – Reciprocating Compressor (Stages 1 and 4)

Photograph 5 – Reciprocating Compressor (Stages 2 and 3)

Photograph 6 – Interstage Coolers

Photograph 7 – TEG Dehydration System Contactor

Photograph 8 – TEG Dehydration Regeneration Skid

Photograph 9 – Final Compressor Aftercooler

Photograph 10 – Multistage Centrifugal Pump

Photograph 11 – CO_2 Injection Well

1.0 Abstract

The Midwest Geological Sequestration Consortium, one of seven U.S. Department of Energy Regional Sequestration Partnerships, began injection of 1,000 tonnes (metric tons) per day of CO_2 at the Archer Daniels Midland facility in Decatur, Illinois in November 2011. This is known as the Illinois Basin – Decatur Project (IBDP). Trimeric Corporation had process engineering design responsibility for the compression and dehydration facility that is used to take atmospheric pressure CO_2 from the ADM ethanol fermentation process and deliver dehydrated CO_2 to the injection well. An overview of the project design basis and the requirements that led to the selected process design will be presented. An overall system design review including the multistage centrifugal blower, reciprocating compressors, triethylene-glycol dehydration system, multistage centrifugal pump and the pipeline will be presented. Lessons learned during the startup and commissioning phases will be presented. A comparison of this facility to compression and dehydration facilities for a commercial scale 500 MWe facility will be presented.

2.0 Project Background

The Illinois Basin - Decatur Project is a large scale CO_2 sequestration demonstration project, led by the Midwest Geological Sequestration Consortium and funded by the U.S. Department of Energy. The host site is the Archer Daniels Midland facility in Decatur, Illinois. The scope of the project is to compress and dehydrate 1,000 tonnes / day of 99% + pure CO_2 from ethanol plant fermenters and inject the CO_2 in a saline aquifer 7,000 feet underground. Injection began in November 2011 and will continue for nominally three years until one million tonnes total have been injected. The MGSC will monitor CO_2 subsurface plume migration, groundwater, and surface conditions during the three-year injection period and for three years after injection stops.

3.0 Process Design Basis and Permit Conditions

This section discusses the process design basis and injection permit requirements for the project.

The process design basis included the functional design requirements of the surface facilities for the compression and dehydration of the carbon dioxide for injection.

The CO_2 flow delivery requirement was 1 million tonnes (dry basis) of CO_2 over a three-year period. The surface facilities were designed for 24-hour operation, with no more than 30 days of downtime per year. Downtime includes scheduled downtime and unscheduled downtime. These requirements led to a minimum specified design rate of 995 tonnes per day for the compression and dehydration equipment.

The project timeline required ordering compression and dehydration equipment without knowing the surface injection pressure that would be required to meet the desired injection rate. At the time the equipment was ordered, the injection well had not been permitted or drilled and predictions of required surface injection pressures made by project geologists and reservoir engineers were made based on data from the nearest known well, which was several miles away. At the time of project initiation, the state of knowledge in defining the surface pressure

required for injection was based on model data shown in Figure 1. The graph shows the relationship between down-hole pressure and fluid injection rate in barrels per day with an over-lay of constant surface pressure and injectivity curves. The injectivity index (PI) quantifies the pressure increase due to pumping a known rate and volume of fluids into a formation. At a given injectivity index, the down-hole pressure increases as the injection flow increases. At a higher formation injectivity value, the increase in down-hole pressure is less steep with an increase in fluid flow, thus more flow to the formation. Note that 1,100 tonnes per day is approximately 10,000 bpd.

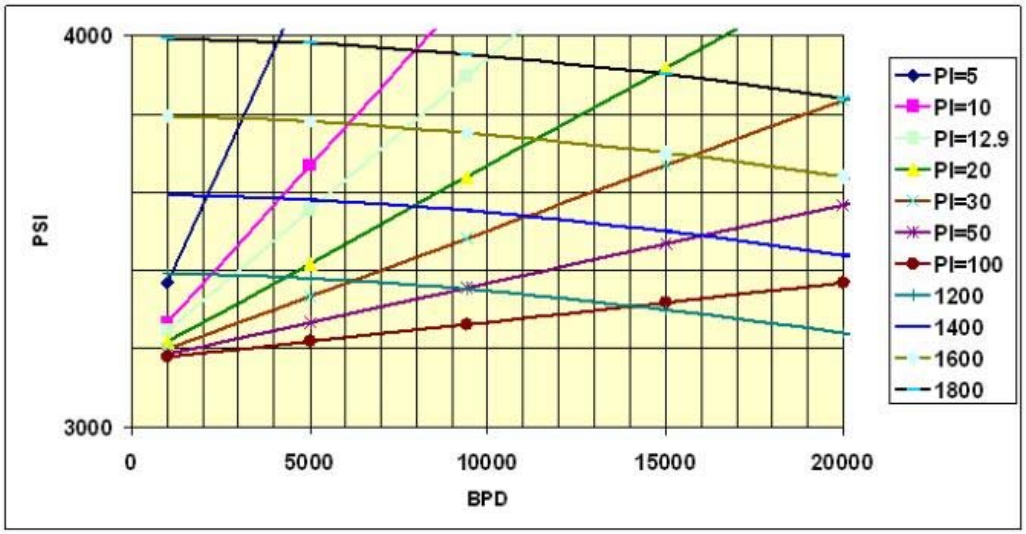

Figure 1 – Flow vs. Down-hole Pressure as a Function of Injectivity (PI) and Surface Pressure

During initial injection into the Mt. Simon formation, it was anticipated that due to displacement of water in the formation by the CO_2, the injectivity will resemble that of 5 to 20 PI curves and that after a large amount of water is displaced, the injectivity will follow the 20 to 100 PI curves. Based on this data, it was believed that a CO_2 injection rate of 1,100 tonnes per day into the Mt. Simon formation was achievable with selection of compression equipment capable of operating at surface injection pressures ranging from 1,400 to 1,950 psig.

The original CO_2 delivery requirements for injection rate, pressure, temperature, and phase condition are summarized in the Table 1.

Table 1: CO_2 Delivery Requirements

Operational Parameter	Project Design Requirement
Injection Rate	Able to inject at rates ranging from 250 – 995 tonnes/day
Flow Control	Maintain within 10 % of target flow
Maximum Wellhead Inlet Pressure	1,350 – 2,000 psig
Minimum Wellhead Inlet Pressure	During startup: 0 psig – 1,057 psig, During normal operations: 1,057 psig.
Pressure Control	Injection pressure is not controlled when the injection rate is specified
Maximum Wellhead Inlet Temperature	120 °F
Minimum Wellhead Inlet Temperature	88 °F
Temperature Control	Target set point after reciprocating compressors was 95 °F. Not controlled if multistage centrifugal pump is used, which adds 10 °F to 15 °F to CO_2 surface temperatures.

Each of the specifications in Table 1and their rationale are discussed below.

INJECTION RATE

The system was required to deliver CO_2 to the injection well at any specified flow rate from 250 – 995 tonnes per day. This turndown capability was specified in order to allow the flexibility to conduct injection experiments over a wide range injection rates. The system was designed for a maximum capacity of 1,100 tonnes per day to add a 10% safety factor to the equipment design.

FLOW CONTROL

The system was required to maintain CO_2 flow to within +/- 10 % of the targeted flow rate. For example, for steady-flow test at an injection rate of 500 tonnes per day, the system must be able to control the flow to between 450 and 550 tonnes per day during that test. This range was set based on expected typical performance of compression systems operating at steady flow conditions and typical accuracy and performance of standard flow control equipment.

MAXIMUM DELIVERY PRESSURE

The system was to be capable of delivering CO_2 at a maximum surface pressure between 1,350 and 2,000 psig at the wellhead. At the time of initial design and equipment selection process, the actual required injection pressure was unknown.

MINIMUM CO_2 DELIVERY PRESSURE

During startup, the system was to be designed to accommodate the increase in injection wellhead inlet pressure from 0 psig during initial startup up to the expected maximum operating surface pressure during normal operation. As specified in the draft Underground Injection Control, UIC injection permit, it was required that during normal operation, the system had the capability of delivering CO_2 to the wellhead at a minimum pressure of 1,057 psig (or 1,071 psia, which is the critical pressure of CO_2).

WELLHEAD PRESSURE CONTROL

Since pressure of the CO_2 delivered to wellhead is generally determined by characteristics of the reservoir and the injection rate, there was no design requirement to maintain control over surface injection pressure beyond meeting the specification for minimum and maximum pressure as noted above. At steady-state operations and barring any changes in injection rate, the wellhead pressure should remain relatively constant. The system operating procedures were developed to minimize rapid pressure changes during startup and shutdown to less than 50 psig per minute. It may not be possible in all cases to meet this requirement though. For example, if there is a sudden loss of power at the plant and the compressors shut down, the wellhead pressure could drop rapidly, and the pressure drop could exceed 50 psig per minute.

MAXIMUM CO_2 DELIVERY TEMPERATURE AT INJECTION WELLHEAD

A maximum wellhead temperature of 120 °F was specified. This is a typical summer-condition, outlet temperature for air-cooled heat exchangers, commonly used in gas compression. Using water-cooled exchangers will likely result in lower surface injection temperatures year round. The final Underground Injection Control (UIC) permit had an upper limit of 150 °F for the CO_2 delivered to the inlet to the injection well.

MINIMUM CO_2 DELIVERY TEMPERATURE AT INJECTION

A minimum wellhead temperature of 88 °F in the design basis was based on parameter limits specified in the initial draft of the UIC permit. It was noted that during a cold-weather start-up and during normal operations prior to insulation of the above ground CO_2 pipeline that the CO_2 could be colder than 88 °F at the wellhead. Subsequent revisions to the UIC permit were based on a minimum surface injection temperature requirement of 60 °F. The final UIC permit required injection of CO_2 in the supercritical state at the point of injection into the formation, which means that the CO_2 must be above its critical temperature of 88 °F at the point of injection into the formation. Modeling over the range of expected surface pressures, showed that with heating due to hydrostatic compression of CO_2 in the injection well, 60 °F CO_2 delivered at the inlet to the wellhead would result in down-hole temperatures greater than 88 °F. This change in the UIC permit allowed compliance to be monitored with surface pressure and temperature gauges, which are more accessible for calibration and service than down-hole instruments.

TEMPERATURE CONTROL

Other than the minimum and maximum temperature limits listed above, there was no requirement to maintain or control the CO_2 temperature at the wellhead at a specific set point. It was anticipated that the CO_2 temperature at the wellhead inlet would remain relatively constant with consistent operation of cooling equipment associated with the compression system.

In addition to these operational parameters, Table 2 includes the purity specifications for the injection CO_2 stream.

Table 2: Injection CO_2 Purity Specification

Component	Purity Specification
Carbon Dioxide	Minimum 99 %
Oxygen	100 ppmv maximum
Water	30 lb/MMscf (633 ppmv) maximum

Each of the specifications in Table 2 and their rationale are discussed below.

CARBON DIOXIDE

The fermenter vent gas from an ethanol plant is generally high purity CO_2 (> 99% vol.). The source point specified for this project was downstream of an existing water scrubbing system, thus there would be minimal (ppm level) impurities from ethanol production remaining in the CO_2 to be compressed and dehydrated prior to injection.

OXYGEN

Typical analysis of the source stream indicated that normal oxygen content was below 10 ppmv. A measurement of oxygen significantly higher (10x) than this level would indicate ingress of air from a possible loss of pressure control on a fermenter.

WATER

As stated above, the source point for the CO_2 is down stream of an existing water scrubber and therefore would be considered water saturated. A typical CO_2 pipeline specification of 30 lb/MMscf was selected in order to prevent the formation of free water or hydrates in the transfer pipeline to the wellhead.

4.0 Equipment Screening and Selection Process

4.1 Equipment Screening

A study was conducted to identify the preferred equipment configuration for this project to compress the ethanol fermenter vent stream of CO_2 from approximately 1 psig to a maximum of 2,000 psig at the wellhead.

COMPRESSION CONFIGURATIONS

The following is a list of the equipment combinations considered for CO_2 delivery:

- Blower, Screw Compressors, Reciprocating Compressors
- Blower, Reciprocating Compressors
- Blower, Reciprocating Compressors, Pump
- Blower, Screw Compressors, Reciprocating Compressors, Pump
- Compression, Liquefaction, Pump

The configurations were compared using budgetary purchased equipment costs (+/- 20% accuracy) and the estimated power consumption over a 3-year project life. In addition, each of the configurations utilizing a blower was evaluated without a blower in order to ascertain the impact of the blower on project costs.

The estimated purchased equipment costs for configurations utilizing screw compressors downstream of a blower and upstream of reciprocating compressors were on average 32% less than blower/reciprocating compressor configurations. However, the 3-year electrical costs of the configurations that included a screw compressor were on average 8% more than blower/reciprocating compressor configurations. The total estimated purchased equipment plus 3-year electrical costs for compression equipment configurations that did not utilize screw

compressors (reciprocating compression only) were on average 6% higher than the options that included screw compressors.

Excluding the blower from an equipment configuration significantly increased estimated purchase cost of the subsequent compression equipment by an average of 35% and increased the 3-year electrical cost by an average of 4%.

Budgetary quotes were obtained for a compression to 800 psig, followed by condensation using chilled water and then pumping to the final injection pressure. This approach showed no clear purchased equipment or operating cost advantage and was judged to have more complexity than compression based options.

As a follow up to the options studied above, Trimeric compared a refrigeration based CO_2 liquefaction and pumping approach to the compression approach. The two processes were simulated assuming inlet conditions of 80 °F and 250 psig (the compression from 0 to 250 psig would be the essentially the same on this project for both approaches). The results showed that the liquefaction option had a power consumption that was 38% greater than the reciprocating compressor option. The three year injection period of this project does not justify the higher up-front capital costs associated with refrigeration based CO_2 liquefaction systems. Furthermore, solid desiccant dehydration systems such as activated alumina and molecular sieves are required prior to refrigeration based CO_2 liquefaction and the project did not otherwise require this additional level of dehydration with its associated higher capital and operating costs. There are cases where CO_2 liquefaction and pumping is the most cost-effective approach, however; the site-specific process conditions and goals for this project led the team to conclude that compression and triethylene glycol dehydration was the more economical and preferred alternative for this project.

The centrifugal compressor vendors that Trimeric contacted for budgetary quotes for this project did not provide budgetary quotes. It was difficult to get responses of any kind from these suppliers, but one did comment that this project is on the low end of flow rates where centrifugal compressors are applicable. Centrifugal compressors also have longer equipment delivery times and more limited turndown capabilities than reciprocating compressors. Due to these factors, centrifugal compressors were not considered further for this project.

PROCESS COOLING OPTIONS

Process cooling for this project could have been achieved by either air coolers (fin-fan coolers) or by shell and tube heat exchangers utilizing cooling tower water. A comparison of the two showed that shell and tube exchangers with cooling water option would 1) provide tighter process temperature control within the surface facilities equipment 2) be more conducive to the planned indoor installation of the process equipment, and 3) have a smaller overall footprint, which was critical for this installation within the existing ADM facility. From a cost and performance standpoint, the air-cooled and water cooled options are comparable, with a slight advantage for the water cooled shell and tube heat exchangers due to the lower interstage cooling and final compressor discharge temperatures that can be achieved on a warm summer day. In many cases, air cooling is the preferred option if cooling water is not available or where water resources are limited. Cooling water from an existing cooling water system was available for use on this project.

DEHYDRATION

The basis for setting the gas water content specification at 30 lbs/MMscf (633 ppmv) was that it is typical of what might be specified for a commercial CO_2 pipeline transporting CO_2 for enhanced oil recovery or sequestration

purposes. Dehydration prevents liquid water and/or hydrates from forming and helps to prevent internal corrosion of the 6,400-foot carbon steel pipeline. Both Triethylene Glycol, TEG, and solid desiccant (molecular sieve) dehydration systems were evaluated. A TEG dehydrator will normally dehydrate a CO_2 stream to a water content of 7 lbs/MMscf or lower. A molecular sieve system typically dehydrates to an even lower water content, less than 1 lb/MMscf. The option of TEG dehydration was selected as it provided an acceptable level of dehydration for the project requirements and provided a good safety margin below the project design basis requirements. The project requirements did not justify higher capital and higher operating costs associated with molecular sieve dehydration.

4.2 Equipment Selection

During the equipment selection phase of the project, injectivity testing of the formation had yet to be conducted and as noted earlier, the required wellhead inlet pressure was unknown. It was expected to fall within a range from 1,400 to 1,950 psig. Thus, the selected compression equipment had to have a great deal of operational flexibility in order to meet the project requirements for injection rate and injection rate accuracy over the range of possible required surface injection pressures.

The results of the equipment screening process indicated that the compression configuration that had the lowest purchased equipments costs and 3-year electrical costs was the combination of one blower, two screw compressors, one reciprocating compressor, and one pump. However, based on input from equipment suppliers during the firm equipment bid solicitation process, Trimeric and ADM concluded that the costs for the option with one blower, two reciprocating compressors, and one pump were comparable to the screw compressor option. The total estimated purchased equipment costs combined with 3-year electrical costs for the two options were within 5% of each other for these two options. Eliminating the screw compressors reduced the overall complexity of the system and the number of large equipment skids. Therefore, the option that included a blower, two reciprocating compressors and a pump was chosen.

The reciprocating compressors were designed to operate at a discharge pressure of 1,400 psig followed by a multistage centrifugal pump if additional pressure is needed to meet the desired injection rate. This option provided the needed flexibility for the possible range of surface injection pressures and avoided having to operate larger reciprocating compressors, designed for meeting discharge pressures up to 2,000 psig, in a constant and significant turndown situation if a lower injection pressure was required to meet the desired injection rate.

The selected process is depicted in the Process Block Blow Diagram (

Figure 2) and the Process Flow Diagram (Figure 3). Several photographs of the system are located in Appendix 1.

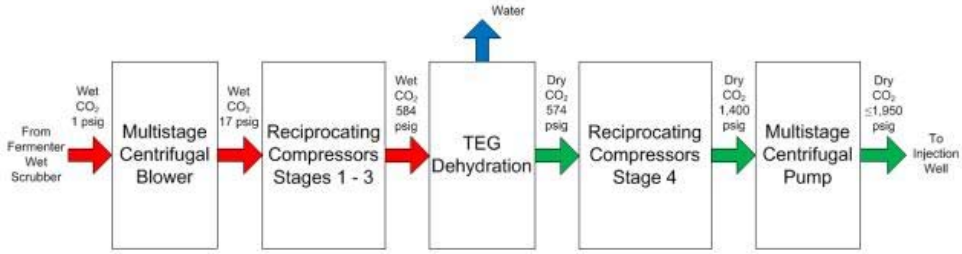

Figure 2 – Process Block Flow Diagram

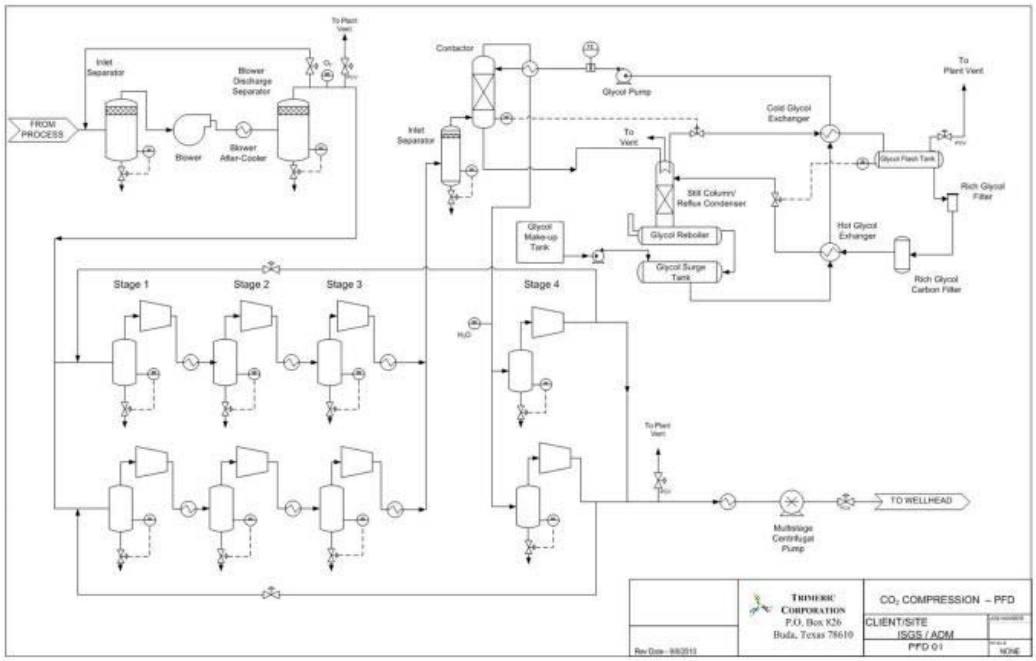

Figure 3 – Surface Facilities Process Flow Diagram

The selected surface facility equipment consists of a single 1,250 hp 4-stage centrifugal booster blower that raises the CO_2 stream pressure to approximately 17 psig. It is followed by two parallel 3,250 hp 4-stage reciprocating compressors that boost the pressure to approximately 1,400 psig, a TEG dehydration unit, and a 200 hp 26-stage centrifugal pump capable of boosting the pressure to up to 2,000 psig. TEG dehydration is performed between the third and fourth stages in the reciprocating compressors where water content in the CO_2 is at a minimum due to previous compression and cooling steps. Shell and tube heat exchangers using cooling water remove the heat

of compression following each compression step, except after the multistage centrifugal pump, which adds a temperature rise of only 10 °F to 15 °F and therefore does not justify addition of a cooler after the pump. Additional description of the Surface Facilities is provided in the following paragraphs.

The compression train receives the relatively low pressure CO_2 stream from the existing primary water scrubber overhead stream. The gas enters the inlet separator where any free water carry-over from the scrubber is allowed to drop out. The stream enters the blower where the CO_2 pressure is increased by approximately 17 psi. The gas stream is monitored for the presence of oxygen by an online oxygen analyzer; a high oxygen reading may indicate an air leak into the system. The gas stream is then cooled by a shell and tube gas cooler. The outlet gas temperature is controlled at a set point of 95 °F.

The CO_2 stream then exits the blower after cooler separator where any condensed liquid is allowed to drop out. The overhead stream from the blower after-cooler separator is split and then enters the suction of two parallel 4-stage reciprocating compressors.

Compressed CO_2 from the 3rd stage of reciprocating compressors combines and enters the TEG dehydration unit inlet separator where condensed liquids disengage from the vapor stream. The CO_2 stream then enters the bottom of the contactor where it is contacted counter currently with the lean (low water content) TEG that enters at the top of the contactor. The dry CO_2 exiting the top of the contactor is cooled in a gas/glycol exchanger before splitting and returning to the 4th stage compressor suction scrubbers. The water content of the dehydrated gas stream is measured by an online moisture analyzer; a high moisture content reading may indicate an operational issue in the dehydration unit. Water is evaporated from the rich TEG in the TEG dehydration unit regeneration skid and the lean TEG is recycled to the contactor.

Figure 4 shows the path of the compression on a CO_2 Pressure-Enthalpy Phase Diagram. Note that the selected pressures and temperatures throughout the system remain outside the liquid, liquid/vapor, and solid/vapor envelopes, where serious operational issues would occur. CO_2 temperatures also remain well above 55 °F, where it is possible to form CO_2-H_2O solid hydrates under some conditions.

The compressor discharge pressure after the 4th stage is controlled at set point by a control valve that allows excess compressed CO_2 to flow to the process vent header if the injection rate to the wellhead is reduced.

Temperature control loops for each of the interstage shell and tube exchangers (three for each compressor) as well as the temperature control for the final after cooler will control the outlet CO_2 temperature at a set point of 95 °F. At this point, the CO_2 can bypass the multistage centrifugal pump if it is not needed or alternatively go through the pump if it is needed to meet the desired injection rate.

CO_2 flow to the wellhead is monitored by a flow indicating transmitter and is controlled by a flow control valve.

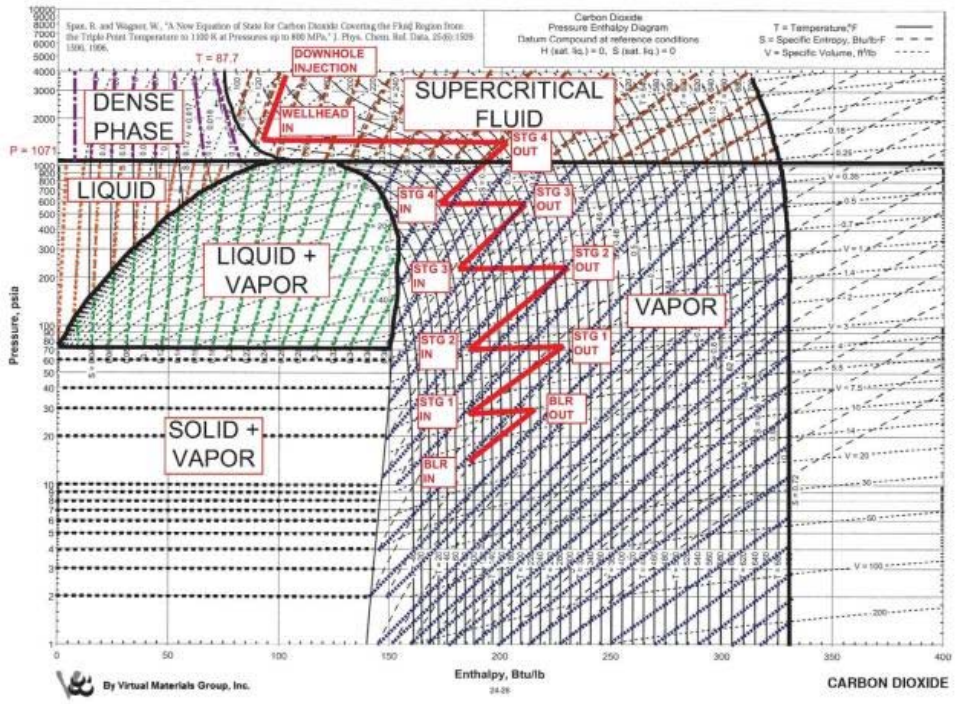

Pressure-Enthalpy Phase Diagram used with Permission of Gas Processors Suppliers Association

Figure 4 – Compression Path on CO_2 Phase Diagram

5.0 Results and Lessons Learned

The system capacity was designed for 1,100 tonnes / day, which provides a 10% safety factor above the desired 1,000 tonnes / day injection rate. The average rate leaving the compression facility during normal operations to date has been 1,086 tonnes / day. Figure 5 shows a plot of the blower capacity curve and the reciprocating compressor curves provided by the equipment suppliers and their expected intersection point at 1,103 tonnes / day leaving the compression facility. Actual operating data collected during the commissioning effort showed very good agreement with these operating curves and their intersection point

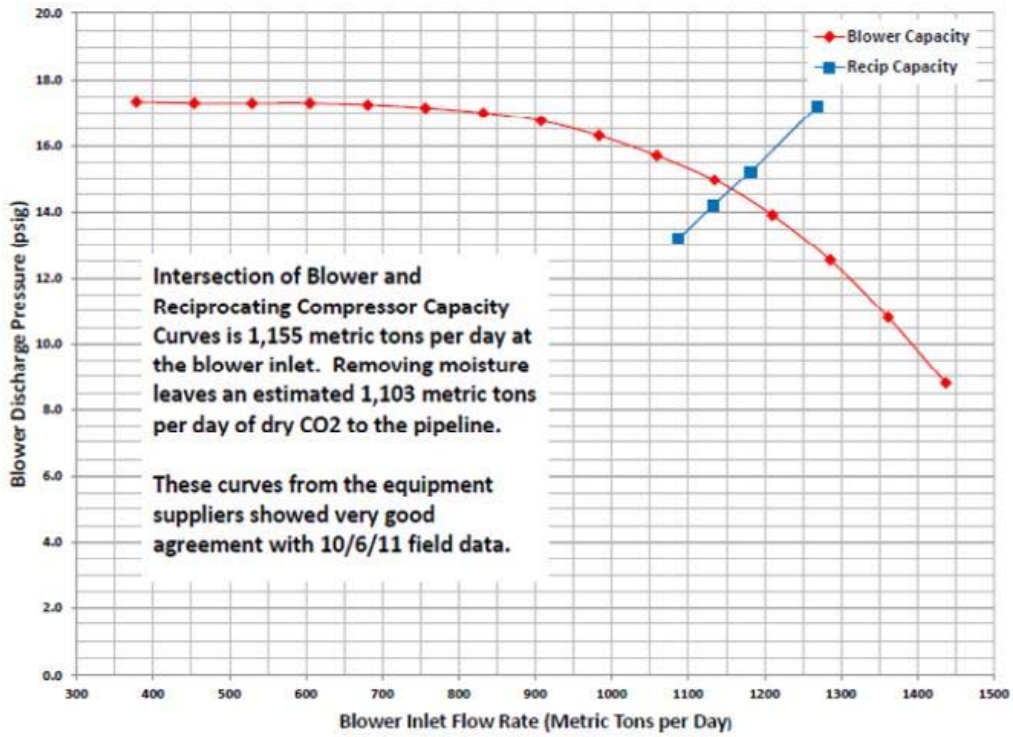

Figure 5 – Intersection of Blower and Reciprocating Compressor Curves

As shown in Figure 6 the average injection rate during normal operations to date has been 974 tonnes / day. ADM is working with Illinois EPA on an administrative issue to remove a current permit constraint that limits the injection rate based on the size of the orifice meter plate in use. After this is resolved, the injection rate will increase by about 100 tonnes / day.

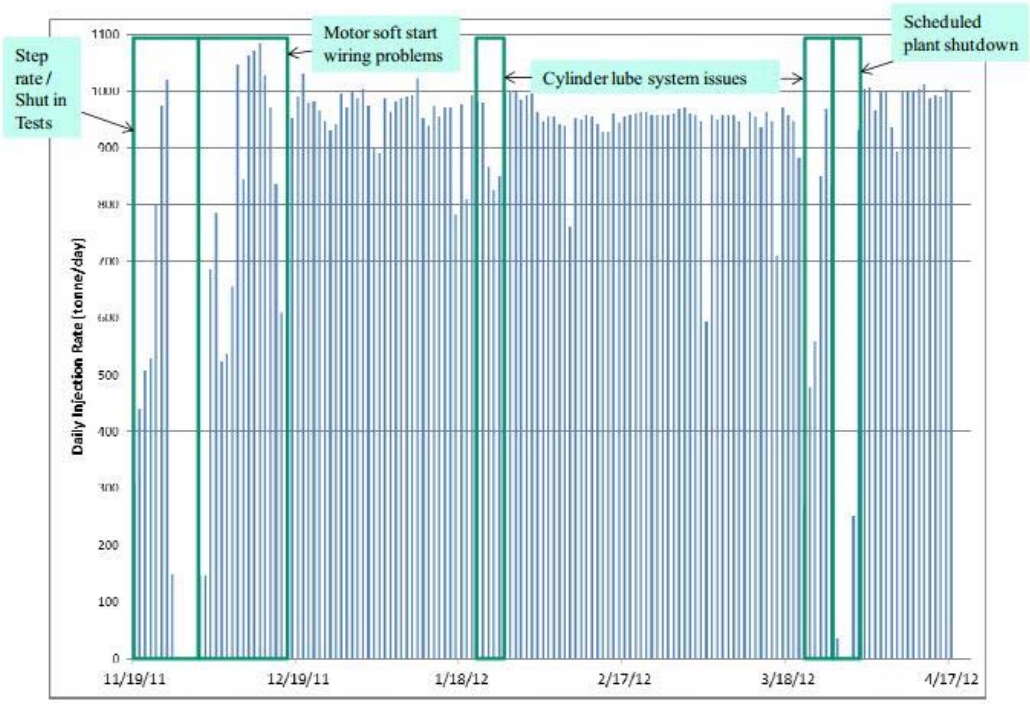

Figure 6 – Daily Injection Rates

In the first six months of operation there have been some issues that led to unscheduled downtime. There has also been one scheduled maintenance period for the compression equipment that coincided with a scheduled ethanol plant shutdown. Main issues leading to unscheduled downtime to date are as follows:

- Blower motor failure – windings arced / phase to phase ground due to poor insulation (8 days)
- Motor soft start wiring issues (9 days)
- Cylinder lubrication issues (rupture disk and pump issues) (8 days)
- Ethanol plant outages - cooling water, power, CO_2 supply (3 days)

The blower motor failure occurred in early Nov. 2011 before injection began in earnest. It was a warranty issue that was repaired by the supplier at no cost to ADM or the project. The impact of the other scheduled and unscheduled downtime events is shown on Figure 6. ADM is working with the equipment packager and the compressor manufacturer to improve the reliability of the cylinder lubrication systems. Unscheduled downtime is expected to decrease now that initial issues have been resolved.

LESSONS LEARNED

The project site is located within the existing ADM Decatur, IL Corn facility. Due to the existing facility infrastructure, it was not practical to install the 6,400 foot, 6 inch diameter pipeline underground. ADM initially operated without insulating the above ground pipeline to evaluate the need for insulation. Ambient conditions

affected CO_2 temperature and therefore density at wellhead inlet, which reduced the surface pressure required for a given injection rate in colder weather. As a result, compression equipment control set points had to be modified to operate with lower discharge pressure. Furthermore, variations in ambient conditions caused undesirable variations in subsurface injection pressures. Therefore, the pipeline was insulated in order to reduce impacts of ambient conditions on subsurface pressure and to ensure that wellhead inlet temperature will remain above 60 °F minimum limit in the UIC injection permit.

Trimeric modeling based on initial injection operations predicts that a surface pressure of 1,455 psig will be required to inject 1,000 tonnes / day if surface CO_2 temperature is 95 °F. Project geologists and reservoir engineers expect the required injection pressures to decline as injection continues (with respect to the injection pressures encountered during initial operations), but if required injection pressures do not decline and if the performance of the final cooler after the compressor degrades due to fouling or other reasons, the multistage centrifugal pump may be needed to achieve desired injection rates in warmer weather when cooling water supply temperatures to the heat exchangers are higher.

It is sometimes difficult to respond to startup, non-steady-state, and upset conditions using the vent valve downstream of the blower and the vent valve downstream of the reciprocating compressors. The vent valve after the reciprocating compressors was difficult to tune during commissioning efforts before injection into the well and therefore use of the pipeline was permitted. After the injection permit was granted and injection began, additional tuning of the vent valve downstream of the compressor combined with the dampening effect the 6,400 foot, 6 inch pipeline had on changing conditions, and widening the compressor discharge pressure shutdown set points, has resulted in satisfactory operation of the vent valve downstream of the compressor. The single blower is sized to feed two reciprocating compressors in parallel. Consequently, when one compressor shuts down, the vent valve downstream of the compressor has to respond quickly to vent half of the gas going through the blower in order to reduce pressure at the discharge of the blower and at the suction to the remaining on-line reciprocating compressor in order to avoid a shutdown of the remaining on-line reciprocating compressor due to high suction pressure or a shutdown of the blower due to high discharge pressure. On the other hand, if the vent valve downstream of the blower opens too quickly, the other reciprocating compressor will shut down on low suction pressure and / or the blower will shut down on low blower discharge pressure. Opening of the blower recycle valve in addition to opening of the vent valve downstream of the blower has reduced the number of compressor shutdowns that occur when the other compressor shuts down. The blower usually remains on-line when one or both compressors shuts down. Keeping the remaining units on line when one compressor shuts down may reduce the time required to get back to the full injection rate because the motor soft starts can impose a one-hour delay before a motor can be restarted. Shutdown limits for compressor suction pressure will also be widened to reduce the chances of one compressor shutting down as a result of the other compressor shutting down. It is possible that additional valve tuning may be required for the vent valve downstream of the blower and the vent valve downstream of the reciprocating compressors.

Operational changes were needed for lower than design cooling water supply temperatures. The system was designed based on a summer design cooling water supply temperature of 85 °F. During the initial months of operation, cooling water temperatures have been lower. The flow rate of cooling water through the heat exchangers after the blower and reciprocating compressors is adjusted to achieve a desired discharge temperature from these exchangers. The initial target temperature for CO_2 leaving these exchangers was 95 °F, which is a 10 °F approach for the summer design cooling water supply temperature of 85 °F. When the cooling water supply temperature is lower, the flow rate of cooling water to the exchangers is reduced which results in high cooling

water discharge temperature from the heat exchangers. Higher cooling water discharge temperatures increase the risk of fouling and corrosion in the cooling water system and in the heat exchangers. Getting the CO_2 too cold (below roughly 60 °F) could lead to issues with CO_2-H_2O solid hydrate formation or formation of liquid CO_2 at pressures in the latter stages of the reciprocating compressors. ADM lowered the CO_2 temperature set points to 80 °F for interstage cooling in order to get cooling water flow rate up and therefore to reduce the cooling water discharge temperatures. ADM then had to lower interstage low suction pressure shutdown set points as suction pressure was lower with cooler (denser) CO_2. ADM may decide to add a cooling water tempering loop to get cooling water supply temperature up in cold weather. The tempering loop would pump some of the cooling water return from the facility to the cooling water supply in order to raise the blended temperature of the cooling water going to the heat exchangers in this facility.

6.0 Comparison with 500 MWe Facility

The 1,000 tonnes per day CO_2 injection rate in the Illinois Basin – Decatur Project is about 10% of the CO_2 that is emitted from a 500 MW (gross) PC power plant. A facility 10 times larger such as a 500 MW PC power plant would mostly likely use centrifugal compressors instead of reciprocating compressors. While larger capacity, lower speed (more reliable and more expensive) reciprocating compressors than those used on the IBDP are available, the higher reliability and still higher per unit throughput capacities of centrifugal compressors compared with reciprocating compressors are very likely to favor selection of centrifugal compressors for a 500 MW PC power plant CO_2 sequestration application.

Triethylene glycol (TEG) dehydration technology is commonly used to dehydrate CO_2 that goes into commercial CO_2 transport pipelines in the U.S. Commercial systems with the capacity to dehydrate the flow rate of CO_2 that could be captured from a 500 MW PC power plant are available and in use at facilities that process CO_2 for enhanced oil recovery (EOR) in the U.S. These units may require multiple trains of glycol contactors for the 500 MW PC power plant scale. It is unlikely that the higher capital operating costs of mole sieve dehydration would be warranted for the power plant sequestration application. TEG dehydration is sufficient and the higher levels of dehydration are not required in this application. It may be possible in some instances to get by with less dehydration and therefore lower cost than TEG dehydration. The most common approach in this instance is to design the injection pipeline and injection well to accommodate the water that remains in the CO_2 after compression and cooling steps. Applications with shorter distance from the compression facility to the injection well and those that do not require meeting a commercial CO_2 pipeline specification for water content may most easily accommodate this approach. However, higher grade – higher cost materials for the pipeline and injection well may be required. Non-steady state conditions such as extended shutdowns must be considered with respect to the possibility for free water (liquid water) formation which can lead to accelerated corrosion rates in CO_2 service and for the possibility of CO_2-H_2O solid hydrate formation which could lead to plugging in the injection well perforations.

Innovative technologies are in development to reduce compression and dehydration costs at the scale required for carbon capture for a 500 MW PC power plant. Examples include the Ramgen[1,2] compressor and the DexPro™ dehydration process. [3,4]

7.0 Summary and Conclusions

The compression and dehydration system for the Illinois Basin-Decatur Project performs in accordance with process design. The flow rate of CO_2 from the system that is available for injection meets the design criteria of 1,100 tonnes per day. Dehydration levels are typically in the 5 lb/MMscf range, as expected for performance of this system. System availability is expected to increase and unscheduled downtime is expected to decrease now that the first few months of operation are complete and the issues impacting system reliability have been identified. Most of these issues were resolved during the first few weeks of operation. ADM is working with equipment suppliers to improve reliability of the cylinder lubrication systems on the reciprocating compressors.

Further tuning of pressure vent valves downstream of the blower and downstream of the reciprocating compressors may be needed to improve the response of the system to upset conditions such as the response of the vent valve downstream of the blower when one of the two reciprocating compressors shuts down. Further planned adjustments of suction pressure set points for compressor shutdown will also improve the system response to upset conditions.

ADM may decide to install a tempering loop to raise the cooling water supply temperature in cold weather. However, lowering the target CO_2 discharge temperature from the heat exchangers from 95 °F to 80 °F may be sufficient to achieve desired cooling water return temperatures without adding a cooling water tempering loop.

The pipeline has been insulated, which will ensure that the CO_2 delivered to the wellhead inlet will remain above the minimum injection temperature of 60 °F allowed in the UIC permit and will greatly reduce the impact of ambient conditions including temperature, wind, and precipitation on the temperature and density of the CO_2 delivered to the wellhead. This in turn will reduce variations in down-hole pressure and temperature associated with surface facility operations. Use of the multistage centrifugal pump may be needed to maintain desired injection rates in warmer weather. Since there is not a cooler after the pump and since the pump will add 10 °F to 15 °F to the CO_2, insulating the pipeline increases the chance that the pump will need to be used in warm weather to meet the desired injection rate as the warmer CO_2 delivered to the wellhead will be less dense.

Quarterly performance monitoring is underway to track, maintain, and improve system performance over the remainder of the injection period. Trimeric has made and plans to continue making quarterly visits to the site during the injection period of this project to review operations, to identify process issues, to identify opportunities for process optimization, and to support ADM and the Illinois State Geological Survey during the injection phase of the Illinois Basin-Decatur Project.

8.0 Acknowledgements

Darin Damiani and John Litynski of the U.S. Department of Energy have consistently supported the Illinois Basin-Decatur Project since its conceptual beginnings in 2007 and through to the present day operations in 2012. Their sustained support provided encouragement to the project team as we worked together to make this first of its kind project a reality. The team at the Illinois State Geological Survey including Rob Finley, Scott Frailey and Sallie Greenberg, working on behalf of the Midwest Geological Sequestration Consortium, helped Trimeric understand the requirements of the compression and dehydration system and how these fit in with the overall goals of the project. Archer Daniels Midland personnel including Kevin Burris and Tom Stone took the project from a concept to an actual operating facility. Their help and that of the ADM Design Services Group including

Mike Marin and John Trombley was essential for completing the mechanical, electrical, structural, and other engineering work that this type of project requires. Enerflex Energy Systems provided the blower and the reciprocating compressor systems. Nestor Japlit, Justin Marquez, and Bruce Moore of Enerflex were instrumental in the success of this project. Dickson Process Systems provided the dehydration system, which has had exceptional performance to date. Clark Dickson and Phani Patchipulusu at DPS were responsive and supportive throughout the entire project. The team at Schlumberger Carbon Services including Jim Kirksey, Scott Marsteller, and Dwight Peters helped Trimeric understand the injection well and how the compression and dehydration facilities need to work with the injection well. Trimeric is glad to have had the opportunity to work with Schlumberger Carbon Services on this project.

9.0 Appendix

Appendix 1 – Surface Facilities Equipment Photos

APPENDIX 1

Photograph 1 – Blower and Compressor Buildings

Photograph 2 – CO_2 Source – Fermenter Wet Scrubber Discharge

Photograph 3 – Blower System

Photograph 4 – Reciprocating Compressor (Stages 1 and 4)

Photograph 5 – Reciprocating Compressor (Stages 2 and 3)

Photograph 6 – Interstage Coolers

Photograph 7 – TEG Dehydration System Contactor

Photograph 8 – TEG Dehydration Regeneration Skid

Photograph 9 – Final Compressor Aftercooler

Photograph 10 – Multistage Centrifugal Pump

Photograph 11 – CO_2 Injection Well

References Cited

[1] Baldwin, P., Williams, J., "Capturing CO_2: Gas Compression vs. Liquefaction", *Power Magazine*, published online 01 June 2009.

[2] "A Shocking Way to Compress CO_2", *Chemical Engineering*, June 2009.

[3] McKay, W., Maddocks, J., Hansen, V., "CO_2 Dehydration: Why? How Much? How? ", Tenth Annual Conference on Carbon Capture and Sequestration, May 2 – 5, 2011.

[4] "CO_2 Dehydration for Pipeline Safety", *Carbon Capture Journal*, Transport and Storage, September/October 2011, Pages 22-24.

MGSC IBDP
Surface Facilities Update

Presented at Midwest Carbon Sequestration Science Conference on 11/8/11

Presented by:
Ray McKaskle, P.E.
Trimeric Corporation

TRIMERIC CORPORATION

Presentation Overview

- Block Flow Diagram
- Process Flow Diagram
- Design Basis and Permit Conditions
- CO_2 Phase Diagram
- Facility and Equipment Photos
- Startup Results to Date
- Lessons Learned (to Date)
- Summary
- Acknowledgements

Block Flow Diagram

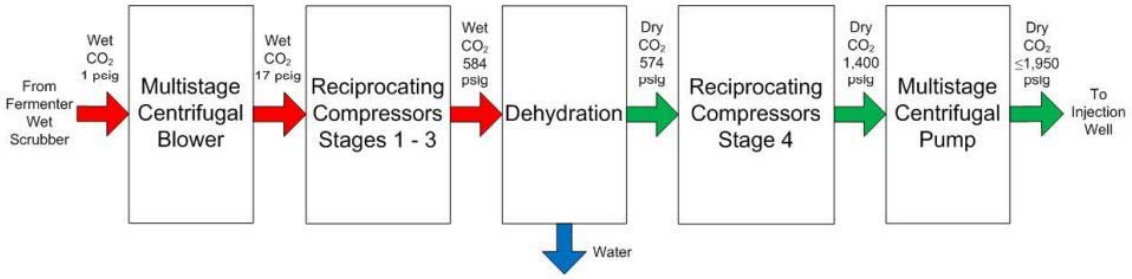

Overall Process Flow Diagram

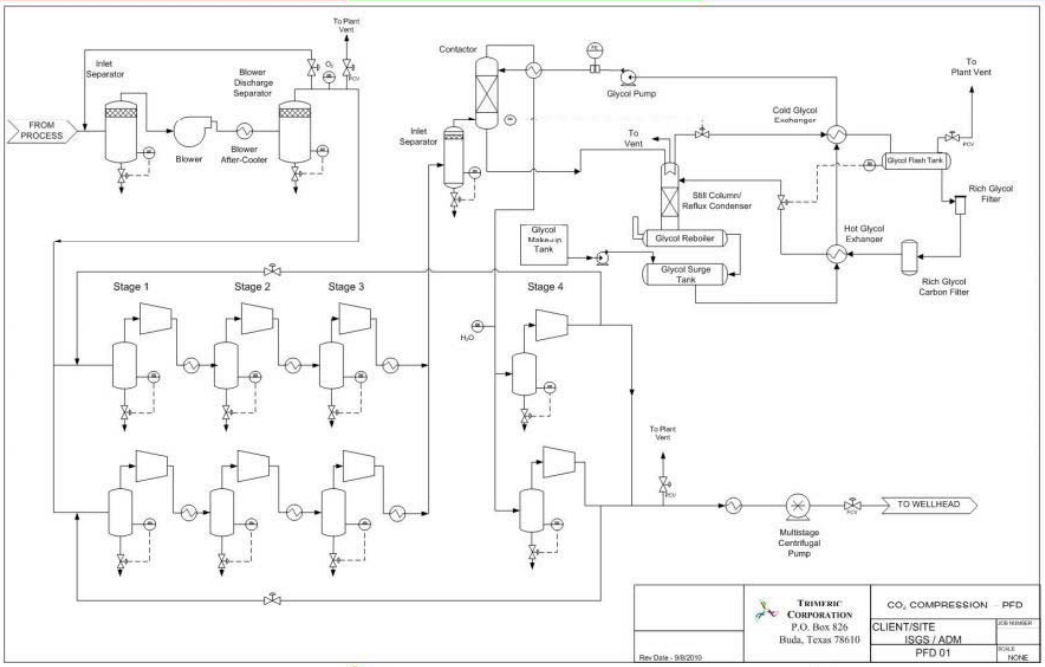

Design Basis and Permit Conditions Summary

Parameter	Units	Design Requirement	UIC Permit Requirement
Injection Rate	metric tons / day	250 - 1,000	< 1,200
Injection Rate	MMscfd	4.8 - 19.0	
Surface Pressure	psig	1,057 - 2,000	< 1,950
Surface Temp.	deg F	88 - 120	60 - 150
Bottomhole Press.	psig		
Bottomhole Temp.	deg F		
Oxygen Content	ppm	< 100	
CO2 Purity	% mol.	99	
Water Content	ppm	633	

Note – Values above are for normal operating conditions, startup and shutdown conditions may vary

CO2 Phase Diagram

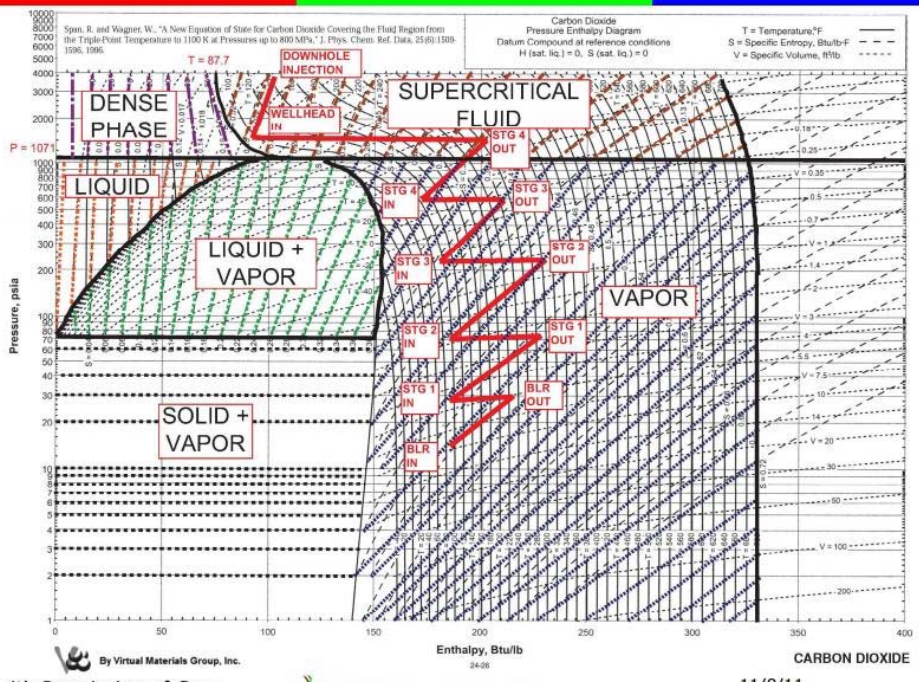

Used with Permission of Gas Processors Suppliers Association

TRIMERIC CORPORATION

11/8/11

6

CO2 Source –Fermenter Scrubber Discharge

Blower and Compressor Buildings

Blower System (1 of 2)

Blower System (2 of 2)

Reciprocating Compressors (1 of 3)

Reciprocating Compressors (2 of 3)

Reciprocating Compressors (3 of 3)

Interstage Coolers

Final Cooler

Dehydration System - Contactor

Dehydration System – Regeneration Skid

Multistage Centrifugal Pump

Injection Well

Intersection of Blower and Compressor Curves

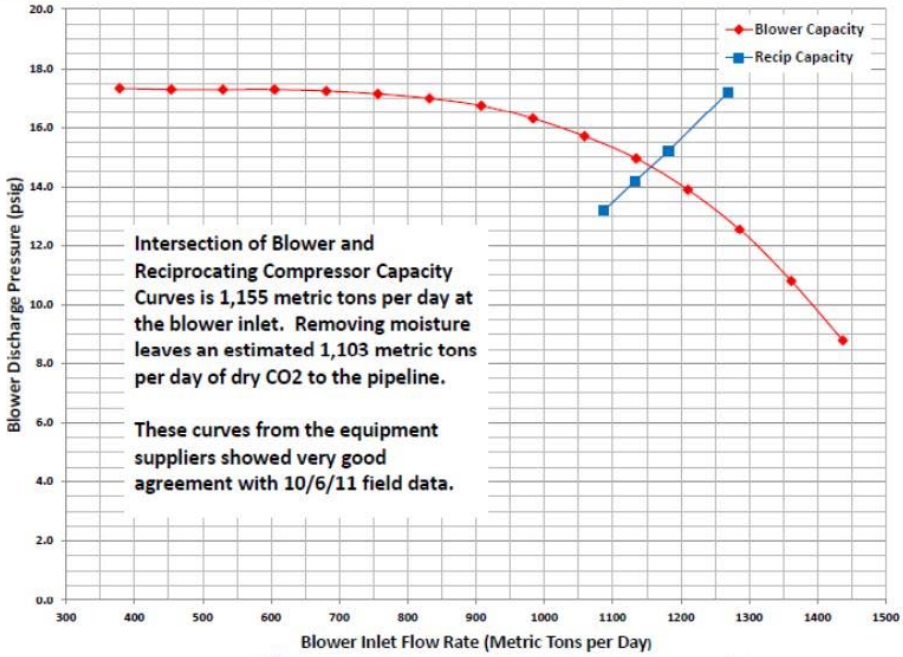

TRIMERIC CORPORATION 11/8/11 20

Pressure - Design vs. Actual

Location	Design (psig)	Actual (psig)
Blower Inlet	-0.3	-0.4
Blower Discharge	14.9	14.7
Recip Stage 1 Suction	12.1	12.5
Recip Stage 1 Discharge	60	65
Recip Stage 2 Suction	54	58
Recip Stage 2 Discharge	235	233
Recip Stage 3 Suction	228	220
Recip Stage 3 Discharge	584	573
Recip Stage 4 Suction	566	558
Recip Stage 4 Discharge	1411	1409

Temperature – Design vs. Actual

Location	Design (deg F)	Actual (deg F)
Blower Inlet	40 - 90	76 - 82
Blower Discharge	177 - 230	220
Recip Stage 1 Suction *	90 - 95	91
Recip Stage 1 Discharge	293	291
Recip Stage 2 Suction *	90 - 95	92
Recip Stage 2 Discharge	313	299
Recip Stage 3 Suction *	90 - 95	92
Recip Stage 3 Discharge	253	244
Recip Stage 4 Suction *	95 - 100	96
Recip Stage 4 Discharge	272	247

*** These suction temperatures are controlled by cooling water flow rate**

Oxygen and Water Content – Design vs. Actual

Parameter	Design Target *	Actual
Oxygen (ppmv)	7	8 - 18
Water (lb/MMSCF)	< 10	5 - 9
Water (pppmv)	< 211	106 - 190

*** Design target is the expected performance point. This is different from the performance requirement (design requirement)**

Lessons Learned (To Date)

- Extended construction timeline due to permitting delays resulted in commissioning challenges - (temporarily) forgotten details, lost and incorrect parts
- Startup, non steady-state conditions such as bringing compressors online and offline without using the pipeline and injection well are hard to control using pressure vent valves
- Temperature control for cooling water supply may be required

Summary

- System performs in accordance with design (to date)
- Pump needs to be commissioned after injection begins
- Flow meter has been calibrated. Performance needs to be verified after injection begins.
- Tuning of pressure vent valves after blower and compressors may be needed after injection begins

Acknowledgements

- Department of Energy – Darin Damiani and John Litynski
- Illinois State Geological Survey – Rob Finley and Scott Frailey
- ADM – Kevin Burris and Tom Stone
- Enerflex – Nestor Japlit and Bruce Moore
- Trimeric – Kevin Fisher, Rosalind Jones, Joe Lundeen, and Brad Piggott

Appendix C: Annulus Pump Document

Annulus Protection System for Injection Well

Annulus Protection System

The annulus protection system will comply with UIC Permit requirements B.1.e.i to B.1.e.v:

"The following procedures will be used to limit the potential for any unpermitted fluid movement into or out of the annulus:

i. *The annulus between the tubing and the long string of casing was filled with an NACL brine at the of completion.. The brine has a specific gravity of 1.104 and a density of 9.2 ppg. The hydrostatic gradient is .478 psi/ft. The brine also contains a corrosion inhibitor.*

ii. *The surface annulus pressure will be kept at a minimum of 400 pounds per square inch (psi) at all times.*

iii. *The pressure within the annular space, over the interval above the packer to the confining layer, shall be greater than the pressure of the adjacent injection formation at all times.*

iv. *Any changes to the composition of annular fluid shall be reported in the next monthly report submitted to the Permit Section, Division of Land Pollution Control.*

v. *A pressure differential of at least 100 psi between the tubing and annular space at the packer shall be maintained during injection of fluid. This does not include start-up and shut-down periods"*

Figure 1 shows the injection well annulus protection system. The annular monitoring system will consist of a continuous annular pressure gauge, a sodium chloride water storage reservoir, a low-volume, high-pressure pump, a control box, and fluid and electrical connections. The control box will receive pressure data from the annular pressure gauge and will be programmed to operate the pump as needed to keep approx. 400 psi (or greater) on the annulus.

The annulus pump will be a General Pump Co. Model 1321 triplex pump rated to 2100 pst and a flow rate of 5.5 GPM. The pump will be powered by a 1.5HP Marathon electric motor. The visual pressure gauge is be a 0-1000 psi liquid filled ASME B40.1 Class A (2%-1-2%) with a stainless steel case. The pump will be controlled by two Barksdale Series 7000 pressure switches one for low pressure to engage the pump and the other for high pressure to shut the pump down. Anticipated range on the switches would be 400 psi for the low pressure set point and 450 psi for the high pressure set point. The Barksdale pressure switch is manually adjustable so if any pressure drift is noted during operation the switches van be reset in a matter of minutes. Annulus pressure and tank level will be monitored at the ADM data control system. The pressure signal will come directly from a separate pressure transducer with 4-20 mA (PIT-014) output to the ADM control system. A 330 gallon standard IBC tank is used to store the NACL brine is connected to the suction inlet of the pump. The tank will be heat traced to prevent winter freeze

ups. The NACL brine will be 9.5 ppg and contains a corrosion inhibitor. A tank level gauge is connected to the monitoring system and volume of packer fluid used will be obtained from the tank level gauge as well as visual measurement.

If there is a loss of electrical power to the annulus re-pressure system pressure will be continued to be monitored by both the pressure transducer and the pressure gauge. If the annulus pressure is stable and within the operating range of 400-450 psi then no action will be taken for power failures of 12 hours or less. If the power failure is expected to go beyond 12 hours or if the annulus pressure is falling below operating range then a portable generator will be connected to the annulus re-pressure system. In an event where it is apparent that a positive pressure of at least 100 psi cannot be maintained or that pressure above the packer cannot be maintained higher than the injection pressure into the injection zone then injection will be shut down until repairs can be made and the system is in operating condition.

Average annular pressure and fluid volumes changes will be recorded daily and reported to IEPA as required monthly.

Detailed description of the monitoring gauges for reporting purposes is found in another section of the completion report. The annular pressure gauge is PIT-014.

Equipment has been installed and pump tested.

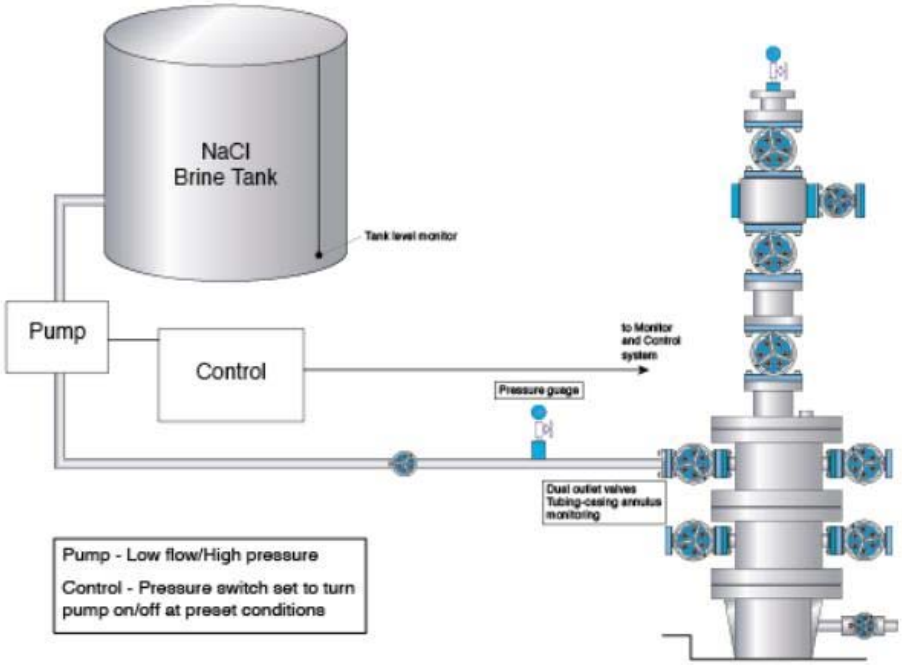

Figure 1: The annular monitoring system general layout.

Appendix D: Project Timeline

Illinois Basin Decatur Project

CO_2 Injection Equipment Summary Timeline

Date	Major Construction Activity
November 2009	Start of blower building construction
December 2009	Start of compressor building construction
December 2009	Phase 1 of pipeline construction complete
December 2009	Wellhead hardware installed
March 2010	TEG dehydration system arrives
March 2010	First compressor skid arrives
April 2010	Multistage centrifugal blower skid arrives
May 2010	Second compressor skid arrives
May 2010	Compressors, blower, and pump installed
July 2010	Pipeline construction and hydro-test complete
August 2010	4160 V switchgear arrives
August 2010	Multistage centrifugal pump motor arrives
August 2010	Construction of blower building complete
August 2010	Construction of compressor building complete
Schedule Note:	Construction activity timeline extended due to delay in receipt of injection permit
December 2010	Process piping 75% complete; cooling water piping 90% complete
January 2011	Cooling water piping complete
May 2011	Vent header complete
August/September 2011	Equipment commissioning
October 2011	Startup (venting to atmosphere)
November 2011	Initial CO_2 injection tests
December 2011	Commencement of on-going CO_2 injection
Date	**Maintenance Activity**
March 2012	Compressor cylinder lube oil system issues
March 2012	Scheduled compressor maintenance
May 2012	Scheduled compressor maintenance
June 2012	VC-301 3rd stage discharge valve maintenance
July 2012	Replaced 4th stage piston rods (by vendor)
September 2012	Blower motor repair
December 2012	Scheduled compressor maintenance
December 2012	VC-201 computer problems
May 2013	VC-301 lube oil flow issue
July 2013	VC-201 maintenance (4th stage rod and 1st throw cylinder)

Appendix E: Trimeric Pipeline Report

ADM Pipeline - Size Estimate

The work in this report covers pipe line diameter and wall thickness estimates only. Detailed pipeline design work lies outside of the typical scope of work for Trimeric; however, we can assist in identifying resources for this detailed design activity.

Pipe Line Size

Several line sizes were evaluated for a pipeline to the injection well. The results can be found in Table 1. The inlet process conditions and piping components used in this evaluation were:

Temperature: 95 °F
Inlet Pressure: 1415 psia
Mass Flow: 101,045 lb/hr (1,100 metric tons/day)
Density: 40.11 lb/ft^3
Viscosity: 0.0595 cP
Pipe Length: 3,200 ft
Fittings: 8 – 90 deg elbows
4 full bore ball valve
4 run thru tee
1 swing check

Table 1: Pipeline Sizing Evaluation

Nominal Pipe Size	in.	4	4	6	6	8
Schedule		40	80	40	80	40
Outside Diameter	in.	4.5	4.5	6.625	6.625	8.625
Inside Diameter	in.	4.026	3.826	6.065	5.761	7.981
Fluid Velocity	ft/s	7.8	8.76	3.5	3.87	2.01
Calculated Pressure Drop	psi	44.5	57.5	5.4	7.0	1.3

The velocity in the 4-inch schedule 40 line is reasonable for dense phase CO_2 flow; however, the associated pressure drop may not be acceptable. An analysis was completed to show the cost of the increased energy usage required to utilize a 4-inch pipeline versus a 6-inch pipeline. Pipe cost data was supplied by American Supply Company, Jackson MS. The energy penalty used for pressure drop impact on compressor operations was $2251 per year for the 4 inch pipeline and $321 per year for the 6 inch pipeline. The resulting graph (Figure 1) shows the breakeven point at approximately 10 years for the ASTM A-106 Gr B pipe and 15 years for the API 5L X52 pipe.

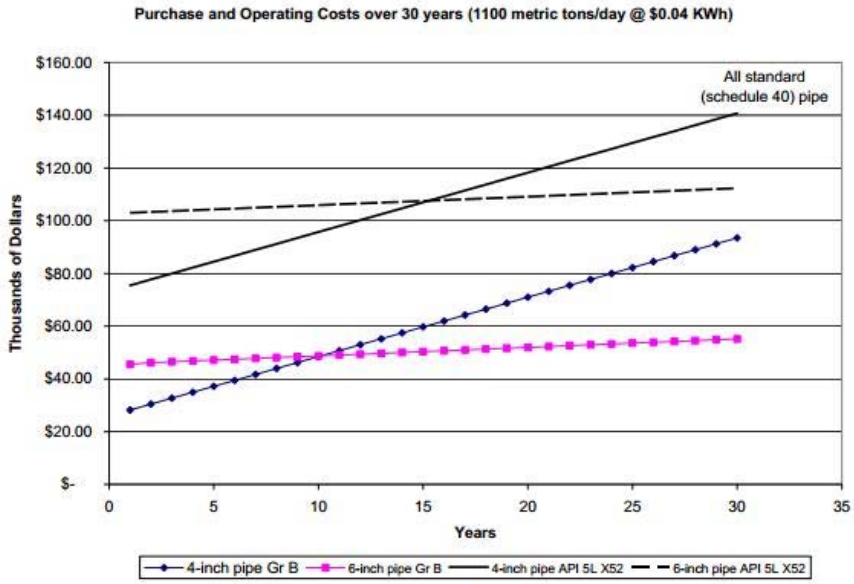

Figure 1 – Cost Analysis for 4 vs. 6 inch pipeline

Steel Piping System Design Requirements

According to ASME B31.8-2003 *Gas Transmission and Distribution Piping Systems*, design pressure for steel gas piping systems or nominal wall thickness for a given design pressure shall be determined by the following formula (assuming no corrosion or erosion allowance)

$$P = \frac{2St}{D} FET$$

Where

D = nominal outside diameter of pipe, in.
E = longitudinal joint factor obtained from Table 841.115A
F = design factor obtained from Table 841.114A.
P = design pressure, psig
S = specified minimum yield strength, psi. Appendix D of B31-8 references commonly used piping steels
T = temperature de-rating factor obtained from Table 841.116A
t = nominal wall thickness, in.

Nominal Outside Diameter

At the time of the evaluation, 4, 6 and 8 inch nominal diameter pipe was under consideration for the carbon dioxide pipe line to the injection well. Tradeoffs include lower purchased costs and higher operating costs for smaller diameter pipe and vice versa for larger pipe. Larger diameter pipe also provides excess capacity in the event that any future expansions increase the flow rate desired through the pipeline.

Longitudinal Joint Factor – E

If the type of longitudinal joint can be determined with certainty, the corresponding longitudinal joint factor, E found in Table 841.115A in Chapter IV of ASME B31.8-2003 may be used. Otherwise, E shall be taken as 0.60 for pipe NPS (nominal pipe size) 4 and smaller, or 0.80 for pipe larger than NPS 4. A listing of Longitudinal Joint Factors for various pipe classes can be found in Table 2. For this evaluation the pipe is assumed to be Seamless or Electric Resistance Welded, ERW, which both have an associated Joint Factor of 1. In previous recommendations for piping specifications for high pressure carbon dioxide, electric resistance weld pipe which can be produced in lengths up to 115 feet, was recommended for longer runs of pipe as seamless pipe is not available in long lengths.

Table 2- From ASME B31.8 - Table 841.115A Longitudinal Joint Factor, E

Spec. No	Pipe Class [1]	E Factor
ASTM A 53	Seamless	1.00
	Electric Resistance Welded	1.00
	Furnace Butt Welded: Continuous Weld	0.6
ASTM A 106	Seamless	1.00
ASTM A 134	Electric Fusion Arc Welded	0.80
ASTM A 135	Electric Resistance Welded	1.00
ASTM A 139	Electric Fusion Welded	0.80
ASTM A 211	Spiral Welded Steel Pipe	0.80
ASTM A 333	Seamless	1.00
	Electric Resistance Welded	1.00
ASTM A 381	Double Submerged-Arc-Welded	1.00
ASTM A 671	Electric Fusion Welded	
	Classes 13, 23, 22, 43, 53	0.80
	Classes 12, 22, 32, 42, 52	1.00
API 5L	Seamless	1.00
	Electric Resistance Welded	1.00
	Electric Flash Welded	1.00
	Submerged Arc Welded	1.00
	Furnace Butt Welded	0.60

[1] Definitions for the various classes of welded pipe are given in para. 804.243, ASME B31.8-2003 Gas Transmission and Distribution Piping Systems

Design Factor

The design factor selected from Table 841.114B is based on the type of facility and location class. It is currently assumed that the pipeline could possibly flow through a Class I Division 2 area. It was assumed that the pipeline would remain on private roads and not near large concentration of people. These assumptions result in a selection of 0.72 for the design factor, F.

Design Pressure

At the time of evaluation, the final well head pressure was unknown. A value of 2200 psig was selected for the evaluation.

Specified Minimum Yield Strength

The Specified Minimum Yield Strength, SMY in psi is associated with the specification governing the production and use of the steel pipe. API 5L is a typical pipe specification used in oil and gas transmission pipeline applications and is available in several intermediate grades with varying SMYs. For this evaluation an APL 5L X52 with a SMY of 52,000 psi was used. Note it is up to the detailed design team to make the final selection of the piping system.

Temperature De-rating Factor

This factor is used to de-rate piping systems due to elevated operating temperatures above 250 °F. This system will operate at 95 °F or below. It is improbable that a condition will exist during normal operations where the temperature will exceed 250 °F, thus the temperature de-rating factor is 1.00.

Nominal Required Wall Thickness

A nominal wall thickness, *t* was calculated based on the above assumptions for 4 and 6 inch pipe. Table 3 shows a comparison of the calculated nominal wall thickness required and wall thickness for both schedule 40 (standard weight) and schedule 80 for each pipeline size.

Table 3 – Pipe Wall Thickness Summary (API 5L X52 Pipe)

Pipe size, in.	Nominal Wall Thickness, in.		
	Required	Schedule 40	Schedule 80
4	0.132	0.237	0.337
6	0.195	0.280	0.432

Standard (schedule 40) API 5L X52 pipe is adequate from design pressure perspective and exceeds the nominal thickness requirement for this piping system. In fact, the standard weight pipe results in a piping design pressure of 3944 psig for 4-inch pipe and 3165 psig for the 6 inch pipe.

This is only a preliminary estimate of the wall thickness requirements. Further consideration may need to be taken into consideration such as possible use of pipe that has a lower SMY such as ASTM A-106 Grade B (SMY of 35,000 psi) thus resulting in a lower initial pipeline costs, but also a lower system design pressure. Table 4 includes a

summary of pipe schedules, cost in $/ft and weight in pounds per foot [2]. Note that 6-in sch 40 ASTM A-106 Gr B is not an option since this would result in a calculated wall thickness equaling 0.289 in. which is greater than that of 6 in sch 40 which is 0.280 in.

Table 4 – Piping Costs

Pipe Quotes - April 2009 (based on 3200 ft)							
Size in.	Schedule	Material	Thickness in.		Specified Minimum Yield psig	Pipe Cost $/ft	lb/ft
4	40	CS	0.237	A-106 Gr B	35,000	8.11	10.79
4	80	CS	0.337	A-106 Gr B	35,000	11.3	14.98
4	STD	CS	0.237	API 5L X52	52,000	22.88	10.79
4	XH	CS	0.337	API 5L X52	52,000	31.77	14.98
6	80	CS	0.432	A-106 Gr B	35,000	28.83	28.57
6	STD	CS	0.280	API 5L X52	52,000	32.09	18.97
8	40	CS	0.322	A-106 Gr B	35,000	21.44	28.55
8	STD	CS	0.322	API 5L X52	52,000	52.26	28.55

Three traditional designations are often used to distinguish different weights of pipe: standard wall (STD), extra strong (XS) and double extra strong wall (XXS). The latter two are also sometimes referred to as extra heavy wall (XH) and double extra heavy wall (XXH), respectively. Further standardizations of pipe dimensions are published by the American Standards Association (ASA) in ASA.B36.10 [3], which shows the broader range of wall thicknesses for schedule numbers from schedule 10 to schedule 160.

A relationship exists between the piping designations for STD and schedule 40 pipe. The wall thickness increases as the pipe size increases yet are the same for each pipe designation through 10 inch. Both STD and schedule 40 pipe larger than 10 inch have a wall thickness of 3/8-inch (0.375 in.).
For XS (XH) and schedule 80 pipe, the wall thicknesses also increase as the pipe size increases and are the same for each pipe designation through 8 inch. For piping greater than 8 inch, both XS and schedule 80 pipe have a wall thickness of ½-inch (0.500 in.).

Figure 5 has been included to show the above described relationship of wall thickness for the various schedules of pipe as well as pipe weight in lb/ft for various pipe sizes and schedules.

[2] Source: Crane Technical Paper 410, Appendix B, 1988; reprinted December 2001
[3] Sponsored by the American Society for testing Materials (ASTM) and the American Society of Mechanical Engineers (ASME)

Table 5 – Pipe Wall Thickness and Weight

Pipe Size Nominal	OD (Inches)	5	10	20	30	STD	40	60	XH	80	100	120	140	160	XXH
1	1.315	.065 0.87	.109 1.41			.133 1.68	.133 1.68		.179 2.17	.179 2.17				.250 2.85	.358 3.66
1¼	1.66	.065 1.11	.109 1.81			.140 2.27	.140 2.27		.191 3.00	.191 3.00				.250 3.77	.382 5.22
1½	1.9	.065 1.28	.109 2.09			.145 2.72	.145 2.72		.200 3.63	.200 3.63				.281 4.86	.400 6.41
2	2.375	.065 1.61	.109 2.64			.154 3.66	.154 3.66		.218 5.03	.218 5.03				.344 7.47	.436 9.04
2½	2.875	.083 2.48	.120 3.53			.203 5.80	.203 5.80		.276 7.67	.276 7.67				.375 10.02	.552 13.71
3	3.5	.083 3.03	.120 4.34			.216 7.58	.216 7.58		.300 10.26	.300 10.26				.438 14.34	.600 18.60
3½	4	.083 3.48	.120 4.98			.226 9.12	.226 9.12		.318 12.52	.318 12.52					.636 22.87
4	4.5	.083 3.92	.120 5.62			.237 10.80	.237 10.80	.281 12.67	.337 15.00	.337 15.00		.437 19.02		.531 22.53	.674 27.57
4½	5					.247 12.55			.355 17.63						.710 32.56
5	5.563	.109 6.36	.134 7.78			.258 14.63	.258 14.63		.375 20.80	.375 20.80		.500 27.06		.625 32.99	.750 38.59
6	6.625	.109 7.59	.134 9.30			.280 18.99	.280 18.99		.432 28.60	.432 28.60		.562 36.43		.719 45.39	.864 53.21
8	8.625	.109 9.92	.148 13.41	.250 22.36	.277 24.72	.322 28.58	.322 28.58	.406 35.67	.500 43.43	.500 43.43	.593 50.92	.718 60.69	.812 67.82	.906 74.76	.875 72.49
10	10.75	.134 15.21	.165 18.67	.250 28.06	.307 34.27	.365 40.52	.365 40.52	.500 54.79	.500 54.79	.594 64.49	.719 77.10	.844 89.38	1.000 104.23	1.125 115.75	1.000 104.23
12	12.75	.165 22.20	.180 24.19	.250 33.41	.330 43.81	.375 49.61	.406 53.57	.562 73.22	.500 65.48	.688 88.71	.843 107.30	1.000 125.61	1.125 139.81	1.312 160.42	1.000 125.61
14	14		.250 36.75	.312 45.65	.375 54.62	.375 54.62	.438 63.50	.594 85.13	.500 72.16	.750 106.23	.937 130.85	1.093 150.81	1.250 170.37	1.406 189.29	
16	16		.250 42.09	.312 52.32	.375 62.64	.375 62.64	.500 82.85	.656 107.60	.500 82.85	.844 136.74	1.031 164.98	1.219 192.61	1.438 223.85	1.594 245.48	
18	18		.250 47.44	.312 58.99	.438 82.23	.375 70.65	.562 104.76	.750 138.30	.500 93.54	.938 171.08	1.156 208.15	1.375 244.37	1.562 274.48	1.781 308.79	
20	20		.250 52.78	.375 78.67	.500 104.23	.375 78.67	.593 123.02	.812 166.56	.500 104.23	1.031 209.06	1.281 256.34	1.500 296.65	1.750 341.41	1.969 379.53	
22	22		.250 58.13	.375 86.69	.500 114.92	.375 86.69		.875 197.60	.500 114.92	1.125 251.05	1.375 303.16	1.625 353.94	1.875 403.38	2.125 451.49	
24	24		.250 63.47	.375 94.71	.562 140.81	.375 94.71	.688 171.45	.969 238.57	.500 125.61	1.219 296.86	1.531 367.74	1.812 429.79	2.062 483.57	2.343 542.44	

Source: Omega Steel Pipe Chart – Weight per Foot

Further Work Needed

The above information only covers pipe line sizing and wall thickness estimates. Several other factors need to be addressed during the detail design such as layout plan, pipe rack, welding procedures, welding inspection procedures and internal and external corrosion monitoring / protection. For portions of the pipeline that will run underground, consideration will need to be given to vertical earth loads, surface live loads, surface impact loads, buoyancy and thermal expansion. In addition, cathodic protection and pipe coatings such as fusion bond epoxy, FBE may need to be considered for protection from external corrosion.

Many of these design activities lie outside the expertise of Trimeric; however, we can assist ADM in identifying an individual or companies that may provide some pipeline consulting expertise.

Appendix F: ADM Standard Operating Procedures

	Decatur Corn Processing	VERSION: 5.0	DOCUMENT:
ADM	Standard Operation Procedure Dehydration Unit Operation	ISSUED: July 30, 2012	LINKAGE: None
		PAGE: Page 1 of 16	Author Brad Piggott, Trimeric Corporation

Control Page For: CO_2 Injection Facility Dehydration Unit Normal Operation

Issued July 30, 2012

List of Control copies, location, and responsibility:

Copy #	Location	Responsibility
Original		
Copy 1		
Copy 2		

Approved by:

Quality Assurance Superintendent:_____

Department Superintendent:_____

Previous Version Issued: Original

Summary of current changes and reason for revision: None

Table of Contents

1.0 Scope 3
2.0 Definitions 3
3.0 Process Description 3
4.0 Normal Operation and Alarm Points 5
5.0 Assumptions 6
6.0 Dehydration Unit Start Up 6
7.0 Dehydration Unit Shut Down 8
8.0 Dehydration Unit Troubleshooting 10
9.0 Maintenance Tasks 12

1.0 Scope

The CO_2 injection facility compresses and dehydrates carbon dioxide (CO_2) from the main wet scrubber discharge that treats CO_2 from ethanol fermentation tanks and injects dry, high pressure CO_2 into a local injection well for underground storage. The facility consists of six general areas; the low pressure blower BL-101, the reciprocating compressor VC-201, the reciprocating compressor VC-301, the dehydration unit, the multistage centrifugal CO_2 pump PU-404, and the injection pipeline and wellhead. Electrical power, instrument air, cooling tower water supply and return, nitrogen, and produced water disposal are on-site utilities that are required for the CO_2 injection facility.

This procedure details the operation of the dehydration unit including the start up, shut down, and troubleshooting of the unit. Due to the design of the facility, the start up of the dehydration unit must be done in conjunction with the start up of the reciprocating compressors VC-201 or VC-301. Please refer to the First Time Facility Start Up Procedure for details on the compressor start up. The P&IDs applicable to the dehydration unit are 23433-111 sheets 4-6.

2.0 Definitions

2.1 ESD – Emergency Shut Down. Refers to buttons around the facility that will shut down equipment when activated.

2.2 BMS – Burner Management System. Refers to the dehydration unit PLC code that controls the fuel gas system to the VS-401 burner.

3.0 Process Description

3.1 The dehydration unit in the CO_2 injection facility removes water from the CO_2 process stream by contacting the CO_2 gas stream with triethylene glycol (TEG or glycol). The liquid TEG stream physically absorbs water out of the gas stream in the VS-401 glycol contactor and the dehydrated CO_2 leaves the top of the contactor and flows into HE-401 where it exchanges heat with the incoming lean glycol. From HE-401, the dry CO_2 flows back to the VC-201/301 compressors for further compression. The dehydration unit, operating normally, will reduce the water content in the CO_2 to 7 lb/MMSCF or appx. 150 ppmv.

The water-rich TEG (rich glycol) collects in the bottom of the VS-401 contactor and flows from there through the VS-402 Glycol Still Column Condenser and receives heat from the outgoing water vapor. The rich glycol flows through LCV-404 and takes a substantial pressure drop before flowing through HE-402 where the rich glycol is heated by the hot lean glycol flowing out of the VS-403 reboiler.

The warmed rich glycol enters the TK-402 flash tank where any entrained vapors disengage from the liquid and are sent to the vent header. The rich glycol flows out of TK-402 and through one of two sock filters, VS-404A or VS-404B where any particulate matter is removed from the liquid stream. The rich glycol then flows to VS-405, the Rich Glycol Carbon Filter which removes any trace hydrocarbon impurities.

The filtered rich glycol flows to HE-403 for further heat exchange with the hot lean glycol and then across LCV-405 where it takes a final pressure drop before entering the VS-402 Glycol Still Column. Here the hot rich glycol contacts rising vapors from the VS-403 reboiler which strip some of the absorbed water out of the rich glycol. The vapors continue up the Still Column until they reach the condenser, at which point some water and entrained glycol are condensed and flow back down the Still Column. The remaining water vapor vents to atmosphere.

The stripped rich glycol drops into the VS-403 reboiler where it is heated to 390 °F, causing the water present in the glycol to boil off and travel up the Still Column. The hot, water-lean glycol (lean glycol), flows out of the VS-403 reboiler and through heat exchangers HE-403 and HE-402 where it exchanges heat with the incoming rich glycol.

Cooled lean glycol flows out of HE-402 to the PU-402A/B glycol pumps which pump the lean glycol up to the VS-401 Contactor operating pressure. The high pressure lean glycol flows through HE-401 heat exchanger where it is further cooled by the outgoing

dry CO_2. From HE-401, the glycol enters the VS-401 contactor to absorb more water from the incoming CO_2 stream.

Table 4 summarizes the normal operation, alarm, and shut down set points for the dehydration system.

4.0 Normal Operation and Alarm Points

Tag	Description	Units	Normal Op. Point/Range	LL Shut Down	Alarms L	Alarms H	HH Shut Down
FIT-401	Glycol to VS-401 Flow Rate	gpm	4.6				
LIT-401	TK-401 Inlet Separator Level	Inches	18		12.5	23.5	
LIT-402	VS-401 Contactor Level	Inches	18		12.5	23.5	24
LIT-403	TK-402 Flash Tank Level	Inches	0		-2	6	
LSLL-403	VS-403 Reboiler Level Switch	N/A		4" BCL			
PDIT-401	VS-401 Differential Pressure	psi	0.8				
PDIT-404A	VS-404A Differential Pressure	psi	< 15				
PDIT-404B	VS-404B Differential Pressure	psi	< 15				
PDIT-405	VS-405 Differential Pressure	psi	< 10				
PIT-401	Wet Inlet Gas Pressure	psig	575				
PIT-4402A	HE-402 Cold Glycol Inlet Press.	psig	45				
PIT-4402B	HE-402 Cold Glycol Outlet Press.	psig	44				
PIT-4403A	HE-403 Cold Glycol Inlet Press.	psig	38				
PIT-4403B	HE-403 Cold Glycol Outlet Press.	psig	37				
TIT-4002A	Rich Glycol From Still Condenser Temp.	°F	107				
TIT-401A	VS-401 Gas Discharge Temp.	°F	95				
TIT-401B	Dry Outlet Gas Temperature	°F	98				
TIT-401C	Rich Glycol From VS-401	°F	97				
TIT-402	TK-402 Flash Tank Temperature	°F	215				
TIT-403B	VS-403 Reboiler Stack Temp.	°F	600-700				
TIT-4402A	HE-402 Cold Glycol Inlet Temp.	°F	107				
TIT-4402B	HE-402 Cold Glycol Outlet Temp.	°F	215				
TIT-4402C	HE-402 Hot Glycol Inlet Temp.	°F	276				
TIT-4402D	HE-402 Hot Glycol Outlet Temp.	°F	135				
TIT-4403A	HE-403 Cold Glycol Inlet Temp.	°F	215				
TIT-4403B	HE-403 Cold Glycol Outlet Temp.	°F	330				
TT-401	Wet Inlet Gas Temperature	°F	95			100	
TT-403	VS-403 Reboiler Temperature	°F	390			402	405

*BCL is Below Center Line

5.0 Assumptions

NOTE: Verify these items are ready/complete before attempting start up of the dehydration system.

5.1. All instrumentation has been loop checked and is ready for service.
5.2. Valves in the facility are in the position required for start up, see the *First Time Facility Line Up* procedure for more details.
5.3. Any electrical equipment required is ready for service.
5.4. The instrument air utility is in service.
5.5. The lube oil systems for VC-201/301 are charged with oil and ready for service.
5.6. The dehydration unit is already charged with TEG present in the VS-403 reboiler, the VS-401 contactor, and the TK-402 flash tank as outlined in the *First Time Facility Start Up Procedure*.
5.7. All air has been purged from the system. See the *First Time Facility Start Up Procedure* for more instructions on purging air from the system.

6.0 Dehydration Unit Start Up

6.1 Check the reboiler level at LG-403, if it is below 50% add more fresh TEG to the reboiler to restore the level to 75%.
6.2 Start the reboiler burner from the burner management panel using the following procedure.
  6.2.1 Inform others that you will be turning on the reboiler burner. Keep unnecessary personnel away from the reboiler until it is running.
  6.2.2 Turn on the control power to the burner management panel. The "Power On" light should illuminate.
  6.2.3 Open the 2" block valve on the fuel gas inlet line. Fuel gas will enter the burner piping up to SOV-403A and SOV-403C.
  6.2.4 Verify that the ¼" block valve on the pilot gas line to the burner is open.
  6.2.5 Verify that the 2" block valve on the main fuel line to the burner is open.

6.2.6 Verify that the reboiler stack damper is open and positioned correctly (~75% open).

6.2.7 Press the "Reset" button on the burner management panel.

6.2.8 Press the "Burner Start" button on the burner management panel.

6.2.8.1 The Burner Management System (BMS) will enter a 90 second purge period. Flame detection during this time will abort the burner start sequence.

6.2.8.2 After 90 seconds, the BMS will enter the pilot lighting sequence.

6.2.8.3 SOV-403C and SOV-403E will open.

6.2.8.4 SOV-403D will close.

6.2.8.5 Operator screen will display "Pilot Ignition".

6.2.8.6 For 10 seconds, the BMS will try to light the pilot gas.

6.2.8.7 After 10 seconds, if there is no flame detected, the BMS will abort the start sequence. If this happens it will be necessary to troubleshoot the system. See Section 8.0 of this procedure for troubleshooting.

6.2.8.8 After 10 seconds, if a flame is detected, the BMS will enable the main fuel gas line and open SOV-403F and close SOV-403B. It will also enable SOV-403A.

6.2.8.9 Manually open SOV-403A and verify that the main flame is lit. The BMS will now display "Running" and the "Burner Running" light will be on at the panel.

6.2.8.10 TIC-403 will begin to modulate TV-403A to increase the temperature of the TEG in VS-403.

6.3 Check the stack temperature at TI-403B and adjust the stack damper if necessary. The temperature of the flue gas should be between 600-700 °F.

6.4 Monitor the TEG temperature at TI-403A, verify that TIC-403A is in Auto on the Burner Management Panel (BMP) with a set point of 390 °F.

6.5 Verify that LIC-403 and LIC-404 are in Auto with a set point of 50%.

6.6 Inform appropriate personnel that the dehydration unit is ready to start up. **Once the VC-201 or VC-301 motor is rotating, proceed to the next step.**

6.7 Inform others you will be starting the glycol circulation pumps. Keep unnecessary personnel away from the pump area.

6.8 Start PU-402A or PU-402B, which will begin to transfer glycol from VS-403 to the glycol contactor VS-401. LIC-403 and LIC-404 will open to maintain level in VS-401 and TK-402.

NOTE: If the glycol circulation pumps are started before the reciprocating compressors are running, there is a potential to fill the glycol contactor with too much liquid. Be sure to have the compressors at normal operating speed before turning on the glycol circulation pumps or the level in the contactor will build within a few minutes.

6.9 As the VC-201 or VC-301 compressor pressurizes the VS-401 contactor, glycol will begin to circulate through the system and the dehydration unit is in normal operation.

7.0 Dehydration Unit Shut Down

NOTE: The dehydration unit has several automatic shut down functions that occur when the unit operates outside of established process limits. The procedure below details how to shut the dehydration unit down normally. For details on the automatic shut downs, please refer to the cause and effect chart in the dehydration unit job book.

7.1 Verify that the CO_2 injection facility is in the process of being shut down.

NOTE: The CO_2 injection facility should not be run unless the dehydration unit is functioning properly. The facility compressors should be shut down in conjunction with the shut down of the dehydration unit.

7.2 Shut down the running glycol booster pump, PU-402A or PU-402B.

7.3 Once the running pump shuts down, LIC-404 will close off LCV-404 to maintain level in the VS-401 contactor and LIC-403 will close off LCV-405 to maintain level in the TK-402 flash tank.

7.4 Press the "Burner Stop" button on the dehydration unit panel. The "Burner Running" light will go out.

7.5 The fuel gas block valves, SOV-403A/B/C/D/E/F will de-energize.

7.6 The dehydration unit is now shut down.

8.0 Dehydration Unit Troubleshooting

The following section describes some common problems that may arise with the dehydration unit during start up and operation and provides some suggested solutions to those problems. It should not be considered comprehensive or a substitute for observations made in the field.

Problem Description	Possible Causes of Problem	Possible Solutions to Problem
CO_2 water content greater than specification limit (>30 lb/MMSCF)	Low TEG flow rate	Check TEG flow rate at FIT-401, start standby pump and shut down primary pump if flow is low
	Low TEG regeneration temperature	Check regeneration temperature at TIC-403 and TI-403A, increase if necessary
Excessive TEG make up required	Damaged/plugged mist eliminator in contactor VS-401	Check differential pressure across contactor at PDI-401
	Leak to atmosphere	Check dehydration unit piping and pump seals for leaks
PU-402A/B won't start or shuts down unexpectedly	LSLL-403 active	Check level in VS-403, add fresh TEG if necessary
	LAHH-404 active	Check VS-401 level, decrease set point on LIC-404 if necessary
	Local or Remote ESD Active	Reset ESD as necessary

Problem Description	Possible Causes of Problem	Possible Solutions to Problem
BMS shuts down unexpectedly	TAHH-403 Active	Check temperature in VS-403 locally at TI-403A, lower TIC-403 set point if necessary
	Local or Remote ESD Active	Reset ESD as necessary and restart burner
	BMS flame failure (BALL-403)	Check flame status on dehydration unit and restart burner
BMS will not start burner	SOV-403 showing "not closed"	Check valve position in field and close if necessary
	Pilot light not coming on in time	Check fuel gas pressure PI-403 and adjust regulator if necessary. Monitor pilot fuel gas valves during sequence and verify correct position
	BMS flame failure (BALL-403)	Verify that flame detector is working correctly, replace if necessary

9.0 Maintenance Tasks

9.1 Over time the TEG filters will foul and have to be replaced. When the differential pressure on PDIT-404A or PDIT-404B exceeds 30 PSIG then it is time to replace the cartridge filters (VS-404A or VS-404B).

9.1.1 Isolate the cartridge filter by closing the 1" inlet valve and 1" outlet valve.

9.1.2 Verify that all other valves on the drain header are isolated and nothing is coming out of the line.

9.1.3 Open the 1" drain valve on the bottom of the cartridge filter.

9.1.4 Verify that the ball valve before the pressure gauge (PI-404A or PI-404B) is open and that the gauge is reading zero.

NOTE: Failure to release pressure in the vessel before opening the closure bolts can result in serious injury. Always wear protective clothing and a face shield when changing filter elements.

9.1.5 Once all pressure has been relieved from the vessel, carefully open the ½" needle valve on the top cap to relieve any vacuum on the housing and allow the glycol to drain out.

9.1.6 Loosen the three closure bolts (eye bolts) on the top of the filter cap. When loosening the bolts do not let them swing from the cap lugs until ALL bolts are loose and the cap is separated from the housing sufficiently to insure that no residual pressure is in the vessel.

9.1.7 Remove the cap and swing it to the side.

9.1.8 The glycol inside the filter could be quite warm, use caution to loosen and remove the cap screw and washer which hold the cartridges on the tube stand.

9.1.9 Remove the top two dirty cartridges. This should allow the glycol to continue draining down.

9.1.10 Once the glycol level has dropped, remove the bottom two dirty cartridges.

9.1.11 Clean any contaminate from the vessel housing and mount the clean cartridges on the stands.

9.1.12 Replace the screw and washer, tighten them until the washer indents into the cartridge or a seal is formed between the tube stand and the cartridge. Be careful not to over tighten which can damage the cartridge and allow particulate to pass through the filter.

9.1.13 Remove the closure o-ring. Clean and lubricate the o-ring groove, the sealing face of the cap, the sealing face of the housing, and the o-ring with a common bearing grease.

9.1.14 Inspect the swing bolt pins, threads, and eye bolts, lubricate if needed.

9.1.15 Align the cap on the housing and swing all bolts into position. Verify that cap and housing alignment marks match up.

9.1.16 Tighten each bolt evenly in a circular sequence. Do not over tighten any bolt at one time, use repeated passes until the head is securely in place and properly centered.

9.1.17 Make final tightening passes to bring head o-ring sealing face in firm, metal to metal contact with the filter vessel.

9.1.18 Torque each bolt to 70 ft-lbs, over tightening can cause damage to the sealing surface and introduce leaks. It can also damage threads and bend the bolts.

9.1.19 The filter is now ready to be put online, inspect the work area and clean up anything left over from the filter changeout.

9.1.20 Close the 1" drain valve to isolate the drain header.

9.1.21 Close the ½" needle valve on top of the filter.

9.1.22 Slowly open the 1" inlet valve, as pressure starts to build in the filter monitor for leaks. If any leaks develop immediately close the inlet valve and begin troubleshooting. The most common problems are:

- 9.1.22.1 Closure head is not centered on the vessel.
- 9.1.22.2 Bolts are not tightened to the correct torque.
- 9.1.22.3 Foreign material is interfering with the o-ring seal or the o-ring is defective.

9.1.23 If no leaks develop slowly open the ½" needle valve on top of the filter to let air escape.

9.1.24 Once glycol has filled the filter and all air has been drained, close the ½" needle vent valve and open the 1" discharge

valve to return the filter to service. Differential pressure on clean filters should return to almost 0 PSIG.

9.2 Over time the activated carbon filter will begin to show signs of fouling. This can be indicated by a sudden darkening in color or accelerated system fluid loss caused by foaming. If either occurs it is time to replace the cartridges in VS-405.

9.2.1 Open the 1" bypass valve around VS-405.

9.2.2 Close the 1" inlet and 1" outlet valves.

9.2.3 Verify that all other valves on the drain header are isolated and nothing is coming out of the line.

9.2.4 Open both 1" drain valves on the bottom of the filter housing.

9.2.5 Verify that the ball valves before the pressure gauges (PI-405A and PI-405B) are open and that both gauges are reading zero.

NOTE: Failure to release pressure in the vessel before opening the closure bolts can result in serious injury. Always wear protective clothing and a face shield when changing filter elements.

9.2.6 Once all pressure has been relieved from the vessel, carefully open the ½" needle valves on the top of each cap to relieve any vacuum on the housing and allow the glycol to drain out.

9.2.7 Loosen the four closure bolts (eye bolts) on the top of the filter caps. When loosening the bolts do not let them swing from the cap lugs until ALL bolts are loose and the cap is separated from the housing sufficiently to insure that no residual pressure is in the vessel.

9.2.8 Remove the cap and swing it to the side.

9.2.9 The glycol inside the filter could be quite warm, use caution to loosen and remove the cap screw and washer which hold the cartridges on the tube stand.

9.2.10 Remove the dirty cartridges, there will be two in each filter housing. They will be heavy, use the bridge crane to assist in lifting them out of the housing.

9.2.11 Clean any contaminate from the vessel housing and mount the clean cartridges on the tube stands.

9.2.12 Replace the screw and washer, tighten them until a seal is formed between the canister gasket and washer. Be careful not to over tighten which can damage the cartridge and allow glycol to bypass around the filter.

9.2.13 Remove the closure o-ring. Clean and lubricate the o-ring groove, the sealing face of the cap, the sealing face of the housing, and the o-ring with a common bearing grease.

9.2.14 Inspect the swing bolt pins, threads, and eye bolts, lubricate if needed.

9.2.15 Align the cap on the housing and swing all bolts into position. Verify that cap and housing alignment marks match up.

9.2.16 Tighten each bolt going around in a circular sequence Do not over tighten any bolt at one time, use repeated passes until the head is securely in place and properly centered.

9.2.17 Make final tightening passes to bring head o-ring sealing face in firm, metal to metal contact with the filter vessel.

9.2.18 Torque each bolt to 70 ft-lbs, over tightening can cause damage to the sealing surface and introduce leaks. It can also damage threads and bend the bolts.

9.2.19 The filter is now ready to be put online, inspect the work area and clean up anything left over from the filter changeout.

9.2.20 Close the 1" drain valves to isolate the drain header.

9.2.21 Close the ½" needle valves on top of the filter.

9.2.22 Slowly open the 1" inlet valves, as pressure starts to build in the filter monitor for leaks. If any leaks develop immediately close the inlet valve and begin troubleshooting. The most common problems are:

- 9.2.22.1 Closure head is not centered on the vessel.
- 9.2.22.2 Bolts are not tightened to the correct torque.
- 9.2.22.3 Foreign material is interfering with the o-ring seal or the o-ring is defective.

9.2.23 If no leaks develop slowly open the ½" needle valves on top of the filter to let air escape.

9.2.24 Once glycol has filled the filter and all air has been drained, close the ½" needle vent valves and open the 1" discharge valves.

9.2.25 Return the filter to service by closing the 1" bypass valve. Differential pressure on clean filters should return to almost 0 PSIG.

Control Page For: CO_2 Injection Facility Compression Equipment Normal Operation

Issued: August 30, 2011

List of Control copies, location, and responsibility:

Copy #	Location	Responsibility
Original		
Copy 1		
Copy 2		

Approved by:

Quality Assurance Superintendent:_____

Department Superintendent:_____

Previous Version Issued: Original

Summary of current changes and reason for revision: None

Table of Contents

1.0 Scope 3
2.0 Definitions 3
3.0 Process Description 3
4.0 Normal Operation and Alarm Points – BL-101 6
5.0 Normal Operation and Alarm Points – VC-201 and VC-301 7
6.0 Normal Operation and Alarm Points – Injection Pipeline 9
7.0 Assumptions 10
8.0 Start Up of Blower BL-101 10
9.0 Start Up of First Reciprocating Compressor 11
10.0 Start Up of Injection Pipeline and Injection Well 14
11.0 Switch BL-101 Seal Gas from Instrument Air to Dry CO_2 15
12.0 Start Up of Second Reciprocating Compressor 16
13.0 Shut Down of First Reciprocating Compressor 18
14.0 Shut Down of Second Reciprocating Compressor 19
15.0 Shut Down of Blower BL-101 21

1.0 Scope

The CO_2 injection facility compresses and dehydrates carbon dioxide (CO_2) from the ethanol unit and injects dry, high pressure CO_2 into a local injection well for underground storage. The facility consists of six general areas; the low pressure blower BL-101, the reciprocating compressor VC-201, the reciprocating compressor VC-301, the dehydration unit, the multistage centrifugal CO_2 pump PU-404, and the injection pipeline and wellhead. Electrical power, instrument air, cooling tower water supply and return, nitrogen, and produced water disposal are on-site utilities that are required for the CO_2 injection facility.

This procedure details the operation of the compression equipment including the BL-101 blower, the VC-201 compressor, and the VC-301 compressor. Due to the design of the facility, the start up of this equipment must be done in conjunction with the start up of the dehydration unit. To start up the dehydration unit, please refer to the Dehydration Unit Standard Operation Procedure. This procedure also covers the operation of the injection pipeline and wellhead, assuming that the injection pump PU-404 is not running. To start up the injection pump PU-404, please refer to the PU-404 CO_2 Pump Standard Operating Procedure. The P&IDs applicable to the compression equipment are 23433-111 sheets 1-4 and 7-11 in addition to 23434-111 sheets 1-4.

2.0 Definitions

2.1 None.

3.0 Process Description

3.1 The BL-101 blower compresses water saturated CO_2 from an upstream source operating at nearly atmospheric pressure to a nominal value of 13 psig and the temperature of the gas increases as it is compressed. The hot gas flows from BL-101 and into HE-101, a shell and tube heat exchanger where the hot gas (tube side) is cooled to 95 °F by cooling water (shell side). As the compressed gas cools, liquid water condenses out of the gas stream. The cooled CO_2 gas and liquid water flow into the Blower Aftercooler Separator, TK-102 where the entrained liquid water separates from the gas stream and collects in the bottom of TK-102. The gas stream flows out of the top

of TK-102 for further compression while the collected water flows out of the bottom of TK-102 for disposal.

From TK-102, the gas stream flows to VC-201 and/or VC-301, the four stage reciprocating compressors. VC-201 and VC-301 are identical and for this section, only VC-201 will be referenced. The process flow for VC-301 is identical to VC-201 however. Gas from TK-102 flows to VS-201, the 1st stage suction scrubber which removes any entrained liquids from the gas stream. Liquids collect in the bottom of VS-201 and are periodically drained through LVX-201 for disposal. Gas flows out of the top of VS-201 and into VS-201A, the first stage suction pulsation dampener and then into the 1st stage of VC-201 (cylinders #1 and #3) where it is compressed from 13 psig to 60 psig. The compression of the gas causes it to heat up to 270 °F and the hot gas flows out of the compression cylinders and into VS-201B, the 1st stage discharge pulsation dampener.

From VS-201B, hot gas flows into HE-201, the 1st stage intercooler where it exchanges heat with cooling water and cools to 95 °F. As the gas cools, water vapor condenses out of the gas stream and the vapor liquid mixture flows into VS-202, the 2nd stage suction scrubber to remove liquids from the gas stream. Liquids collect in the bottom of VS-202 and are periodically drained through LVX-202 for disposal. Gas flows out of the top of VS-202 and into VS-202A, the 2nd stage suction pulsation dampener and then into the 2nd stage of VC-201 (cylinders #2 and #4) where it is compressed from 60 psig to 243 psig. The compression of the gas causes it to heat up to 300 °F and the hot gas flows out of the compression cylinders and into VS-202B, the 2nd stage discharge pulsation dampener.

From VS-202B, hot gas flows into HE-202, the 2nd stage intercooler where it exchanges heat with cooling water and cools to 95 °F. As the gas cools, water vapor condenses out of the gas stream and the vapor liquid mixture flows into VS-203, the 3rd stage suction scrubber to remove liquids from the gas stream. Liquids collect in the bottom of VS-203 and are periodically drained through LVX-203 for disposal. Gas flows out of the top of VS-203 and into VS-203A, the 3rd stage suction pulsation dampener and then into the 3rd stage of VC-201

(cylinder #6) where it is compressed from 243 psig to 609 psig. The compression of the gas causes it to heat up to 253 °F and the hot gas flows out of the compression cylinder and into VS-203B, the 3rd stage discharge pulsation dampener.

From VS-203B, hot gas flows into HE-203, the 3rd stage intercooler where it exchanges heat with cooling water and cools to 95 °F. As the gas cools, water vapor condenses out of the gas stream and the vapor liquid mixture flows into the injection facility's dehydration unit. At this point, the gas streams from VC-201 and VC-301 join to be dehydrated. See the normal dehydration unit procedure for more details on this system. At the discharge of the dehydration unit, the gas is dried to pipeline specifications and flows to the 4th stage of VC-201.

Gas flows from the dehydration unit into VS-204, the 4th stage suction scrubber to remove any liquids from the gas stream. Liquids collect in the bottom of VS-204 and are periodically drained through LVX-204 for disposal. Gas flows out of the top of VS-204 and into VS-204A, the 4th stage suction pulsation dampener and then into the 4th stage of VC-201 (cylinder #5) where it is compressed from 600 psig to 1,400 psig. The compression of the gas causes it to heat up to 245 °F and the hot gas flows out of the compression cylinder and into VS-204B, the 4th stage discharge pulsation dampener.

From VS-204B, hot gas from VC-201 combines with hot gas from VC-301 and flows into HE-204A/B, the 4th stage after cooler where it exchanges heat with cooling water and cools to 95 °F. The gas is now a supercritical fluid, meaning that it is at a temperature above its critical temperature and pressure above its critical pressure and is considered to be neither a liquid or a gas. If necessary to achieve injection rates, the supercritical CO_2 flows from HE-204A/B to PU-404, the multistage centrifugal pump where it is pumped up to a pressure between 1,400 – 2,000 psig, flows through approximately 6,400 feet of 6" pipe, and is then injected into an injection well. If 1,400 psig is a high enough pressure for injection, the supercritical CO_2 will bypass PU-404 and PU-404 will not run.

4.0 Normal Operation and Alarm Points – BL-101

Tag	Description	Units	Normal Op. Point/Range	Alarms LL	L	H	HH
LSL-101	TK-101 Low level blower inlet separator	inches	N/A		4		
LSH-101	TK-101 High level blower inlet separator	inches	N/A			14	
LSHH-101	TK-101 Hi-Hi level blower inlet separator	inches	N/A				19
TIT-101A	Blower Suction Temperature	°F	60-90			105	
PTX-101A	Blower Suction Pressure	psia	15	13.0	14.0	16.0	16.5
PTX-101B	Blower Discharge Pressure	psig	13-15		13.0	18.0	18.5
TIT-101B	Blower Discharge Temperature	°F	210-230			235	240
VT-101	Blower Vibration	IPS	< 0.1			0.45	0.50
VT-102A	Blower Motor Vibration - Outboard Bearing	IPS	< 0.1			0.30	0.40
VT-102A	Blower Motor Vibration - Inboard Bearing	IPS	< 0.1			0.30	0.40
II-101	Blower Motor Current	Amps	140-150		47	158	165
TIT-102A	HE-101 Gas Discharge Temperature	°F	95			105	
LSL-102	TK-102 Low level blower aftercooler separator	inches	N/A		4		
LSHH-102	TK-102 Hi-Hi level blower aftercooler separator	inches	N/A				19
PTX-102	TK-102 CO2 Pressure	psig	13-15	10.0	11.0	16.0	
TIT-102B	TK-102 Gas Temperature	°F	95	50	60	115	
ARX-001	Trace Oxygen Analyzer	ppmv	< 10			60	100

*Items highlighted will shut down the blower BL-101.

5.0 Normal Operation and Alarm Points – VC-201 and VC-301

Tag	Description	Instrument Range	Units	Normal Op. Point/Range	Alarms			
					LL	L	H	HH
LSL-201	VS-201 Low level 1st stage scrubber	N/A	inches	N/A		4		
LSHH-201	VS-201 Hi-Hi level 1st stage scrubber	N/A	inches	N/A				19
TIT-201A	VC-201 1st Stage Inlet Temperature	0-200	°F	95	45		125	130
PTX-201A	VC-201 1st Stage Inlet Pressure	0-60	psig	13-15	9	11	15	17
TIT-201B	VC-201 Cylinder #1 Discharge Temperature	0-500	°F	260-300			310	320
TIT-201C	VC-201 Cylinder #3 Discharge Temperature	0-500	°F	260-300			310	320
PTX-201B	VC-201 1st Stage Discharge Pressure	0-250	psig	60	50	55	95	105
TIT-207A	HE-201 Gas Discharge Temperature	0-250	°F	80				
LSL-202	VS-202 Low level 2nd stage scrubber	N/A	inches	N/A		4		
LSHH-202	VS-202 Hi-Hi level 2nd stage scrubber	N/A	inches	N/A				19
TIT-202A	VC-201 2nd Stage Inlet Temperature	0-200	°F	95	65	70	125	130
PTX-202A	VC-201 2nd Stage Inlet Pressure	0-250	psig	60	40	45	85	95
TIT-202B	VC-201 Cylinder #2 Discharge Temperature	0-500	°F	240-300			330	340
TIT-202C	VC-201 Cylinder #4 Discharge Temperature	0-500	°F	240-300			330	340
PTX-202B	VC-201 2nd Stage Discharge Pressure	0-500	psig	243	210	215	260	270
TIT-207B	HE-202 Gas Discharge Temperature	0-250	°F	80				
LSL-203	VS-203 Low level 3rd stage scrubber	N/A	inches	N/A		4		
LSHH-203	VS-203 Hi-Hi level 3rd stage scrubber	N/A	inches	N/A				19
TIT-203A	VC-201 3rd Stage Inlet Temperature	0-200	°F	95	65	70	125	130

Tag	Description	Instrument Range	Units	Normal Op. Point/Range	Alarms LL	L	H	HH
PTX-203A	VC-201 3rd Stage Inlet Pressure	0-500	psig	238	195	210	250	260
PTX-203B	VC-201 3rd Stage Discharge Pressure	0-1000	psig	609	200	205	665	675
TIT-203B	VC-201 Cylinder #6 Discharge Temperature	0-500	°F	240-300			265	275
TIT-207C	HE-203 Gas Discharge Temperature	0-250	°F	80				
LSL-204	VS-204 Low level 4th stage scrubber	N/A	inches	N/A		4		
LSHH-204	VS-204 Hi-Hi level 4th stage scrubber	N/A	inches	N/A				19
TIT-204A	VC-201 4th Stage Inlet Temperature	0-200	°F	95	55	70	125	130
PTX-204A	VC-201 4th Stage Inlet Pressure	0-1000	psig	600	195	200	655	675
TIT-204B	VC-201 Cylinder #5 Discharge Temperature	0-500	°F	240-300			290	300
PTX-204B	VC-201 4th Stage Discharge Pressure	0-4000	psig	1400	1050	1075	1460	1480

*Items highlighted will shut down VC-201 (identical shut downs for VC-301).

6.0 Normal Operation and Alarm Points – Injection Pipeline

Tag	Description	Units	Normal Op. Point/Range	Alarms			
				LL	L	H	HH
TI-006	Aftercooler HE-204B Discharge Temperature	°F	90				
PI-006	Aftercooler HE-204B Discharge Pressure	PSIG	1200				
FI-006	PU-404 Flow Rate	MTD	0-1200				
PI-007	Facility Discharge Pressure	PSIG	1150				
TI-008	Facility Discharge Temperature	°F	85				
PI-008	Pipeline Inlet Pressure	PSIG	1150				
TI-010	PU-404 Discharge Temperature	°F	105				
PI-013	Pipeline Discharge Pressure	PSIG	1400-1925				
TI-009	Wellhead Inlet Temperature	°F	80				
PI-009	Wellhead Inlet Pressure	PSIG	1100-1200			1925	1950
PI-012	Corrosion Monitoring System Pressure	PSIG	1200				
PI-005	Compressor Discharge Pressure	PSIG	1200				
FI-005	Compressor Discharge Flow Rate	MTD	0-1200				

7.0 Assumptions

7.1. All instrumentation has been loop checked and is ready for service.
7.2. Valves in the facility are in the position required for start up as listed in the First Time Facility Line Up procedure.
7.3. The cooling water utility is in service.
7.4. Any electrical equipment is ready for service and rotation checks have been completed.
7.5. The instrument air utility is in service and all pneumatic valves have been tested, are ready for service, and can be operated by the control system.
7.6. The lube oil systems for VC-201/301 are charged with oil and ready for service.
7.7. The oilers for BL-101, PU-404, and PU-402A/B are full.
7.8. Oxygen analyzer ARX-001 and H_2O analyzer ARX-006 are calibrated and ready for service.
7.9. The dehydration unit is inventoried with fluid and ready to start.

8.0 Start Up of Blower BL-101

NOTE: Be sure you are familiar with this procedure prior to starting Blower BL-101 to avoid unnecessary shut downs or equipment damage.

8.1 Contact personnel in the area and inform them that you are ready to proceed with starting up the CO_2 injection facility. Verify that the upstream supply of CO_2 is able to supply gas to the facility.
8.2 Place the Hand/Off/Auto switch for P-102 in the "Auto" position.
8.3 Verify that the blower seal purge system on the inlet to the blower is at 20 psig on PCV-101A and 60 SCFH on FIX-101A. Note that at this point, the purge system will use compressed dry air.
8.4 Verify that the blower seal purge system on the outlet of the blower is at 20 psig on PCV-101B and 30 SCFH on FIX-101B.Open all four ½" drain valves on the bottom of the blower casing to ensure there is no liquid present in the blower. Close each drain valve after opening.
8.5 Verify that PIC-101 is in Auto with a set point of 13.2 psia.
8.6 Verify that IIC-101 is in Auto with a set point of 148 amps (95% Full Load Amps).

8.7 Verify that PIC-102 is in Auto with a set point of 15.0 psig.

8.8 Verify that PIC-101B is in Auto with a set point of 16.0 psig.

8.9 Set TIC-102A that controls the flow rate of cooling water leaving blower aftercooler HE-101 to 95 degrees F in Auto.

8.10 Monitor the process gas outlet temperature from this exchanger once the blower is up and running and if needed switch the controllers to Manual mode to manipulate the valve position to achieve outlet gas temperatures of 95 °F.

8.11 Press "Start" on the HMI for BL-101. The control system will execute the following procedure.

- 8.11.1 Blower suction control valve XV-102 will open to 25%.
- 8.11.2 Blower recycle valve XV-101 will be opened 100%.
- 8.11.3 A time delay of 15 seconds will elapse.
- 8.11.4 The control system will energize BLM-101 and the blower will begin to rotate. It should be at full speed in a matter of seconds.
- 8.11.5 A time delay of 30 seconds will elapse.
- 8.11.6 Blower suction control valve XV-102 will be ramped open to 100%, assuming that the set point of blower motor full load amps for IIC-101 is not met or exceeded.
- 8.11.7 Blower recycle valve XV-101 will be ramped closed to 0% assuming that the pressure in TK-101 as measured by PI-101A is above setpoint.

8.12 CO_2 is now flowing through blower BL-101 and pressurizing the discharge of BL-101. As the recycle valve closes, the vent valve PV-004 will open to maintain a discharge pressure of 15.0 psig.

8.13 Over time, the liquid level will build in TK-102 and LC-102 will open to drain the vessel.

8.14 Check / monitor pump P-102. Verify that it is in Auto and turns on and off with LSH-101 and LSL-101, respectively to drain water from the blower suction scrubber TK-101.

8.15 BL-101 is now up and running.

9.0 Start Up of First Reciprocating Compressor

NOTE: Be sure you are familiar with this procedure prior to starting VC-201/301 to avoid unnecessary shut downs and to reduce the risk of equipment damage. As the compressor comes online, it

will be necessary to finish starting the dehydration unit. Be sure you have the personnel available to finish starting the dehydration unit up at the same time as the start up of VC-201 and/or VC-301. This section assumes that VC-201 will be the first reciprocating compressor to come online and uses VC-201 tagnames. If starting VC-301, use the same procedure but substitute VC-301 tagnames.

9.1 Contact facility personnel and inform them that you are ready to start the reciprocating compressor VC-201.
9.2 If frame oil is cold, turn on the Kim Hotstart package for VC-201 with HS-201, the on/off switch located on the Hotstart control panel.
9.3 Place PIC-005 in Auto with a set point of 1,200 psig.
9.4 Verify that the globe valve downstream of XV-204D is open.
9.5 Put the auxiliary lube oil pump Hand/Off/Auto switch HS-205 in Auto on the HMI.
9.6 Turn off the Kim Hotstart system with the HOA switch HS-201.
9.7 Close FCV-341 by setting to 0% in Manual.
9.8 Close PCV-014 by setting to 0% in Manual.
9.9 Put TC-207A in Auto with a setpoint of 80 deg. F.
9.10 Put TC-207B in Auto with a setpoint of 80 deg. F.
9.11 Put TC-207C in Auto with a setpoint of 80 deg. F.
9.12 Put TC-207D in Auto with a setpoint of 90 deg. F.
9.13 Monitor the process gas outlet temperatures from each exchanger once the compressor is up and running.
9.14 Verify that the following valves are in the listed position.

Tagname	Description	Position
XV-201A	VC-201 Inlet Block Valve	CLOSED
XV-201B	VC-201 Nitrogen Purge Block Valve	CLOSED
XV-203A	VC-201 Dehydration Unit Inlet Block Valve	CLOSED
XV-203B	VC-201 Dehydration Unit Bypass Valve	CLOSED
XV-204A	VC-201 Dehydration Unit Discharge Valve	CLOSED
XV-204B	VC-201 Discharge Block Valve	CLOSED
XV-204C	VC-201 Recycle Valve	CLOSED

Tagname	Description	Position
XV-204D	VC-201 Discharge Blow Down Valve	CLOSED

9.15 Verify all alarms on the compressor have been addressed. Press Acknowledge (ACK) and then RESET on the HMI to clear any present alarms or shut downs for VC-201.

9.16 Press the VC-201 start button on the HMI. The control system will execute the following sequence.

9.16.1 XV-201A will open, and CO_2 from BL-101 will flow into the VC-201 compressor system.

9.16.2 XV-203B will open to bypass the dehydration unit.

9.16.3 XV-203A will open to pressurize the dehydration unit contactor.

9.16.4 XV-204C will open to recycle all compressed flow back to the VC-201 compressor inlet.

9.16.5 Auxiliary lube pump P-202 will start and circulate oil through the compressor lubrication system.

9.16.6 After an oil pressure of 30 psig on PTX-205 is maintained for 30 seconds, the HMI will start the VC-201 compressor.

9.16.7 The VC-201 compressor will rapidly come up to speed and start compressing CO_2 provided by BL-101. All compressed CO_2 will be recycled to the inlet of VC-201 through XV-204C.

9.16.8 Auxiliary lube pump P-202 will shut down and the internal crankshaft driven oil pump P-201 will supply oil to the frame lubrication system.

9.16.9 XV-204D will open and the system will vent CO_2 through XV-204D to the plant vent header.

9.16.10 The HMI will ask if gas from the dehydration unit needs to be purged to the vent header. Select "Yes" unless the dehydration system has previously been purged of nitrogen and/or air.

9.16.11 XV-204A will open, XV-204C will close as will XV-203B, VC-201 will begin to compress CO_2. Interstage pressures on VC-201 will begin to increase up to the normal operating conditions.

9.16.12 XV-204B will open, VC-201 is now open up to the interconnecting piping to the inlet of FCV-341.

9.16.13 XV-204D will close, all CO_2 from VC-201 is now flowing CO_2 to the vent header through PV-005.

NOTE: At this point, all compressed CO_2 will flow to the vent header through PV-005. Monitor the pressure at the discharge of VC-201 as indicated on PI-005 and PI-204B.

9.16.14 VC-201 is now up and running.

9.17 Turn on PU-402A to start pumping TEG into the VS-401 contactor.

9.18 Place LIC-404 and LIC-403 in Auto with a set point of 50%.

9.19 Verify that the glycol control loops LIC-404 and LIC-403 open and are controlling levels in the dehydration unit contactor VS-401 and the dehydration unit flash tank TK-402, respectively.

9.20 The dehydration unit is now up and running.

10.0 Start Up of Injection Pipeline and Injection Well

NOTE: At this point, Blower BL-101 is up and running, the first reciprocating compressor is up and running, and the dehydration unit is up and running. This section will bring the injection pipeline and well up to operating conditions. The CO_2 available to the injection pipeline is at high pressure and unplanned high pressure drops such as venting high pressure CO_2 to the atmosphere or downstream piping at insufficient pressure could cause the formation of dry ice in the facility or the injection pipeline.

10.1 Verify that the CO_2 is dehydrated to the level expected for typical dehydration unit performance (211 ppmv or 10 lb H_2O / MMSCF of CO_2). Adjust the reboiler temperature if necessary.

10.2 Verify that the oxygen content in the CO_2 is less than 60 ppm.

10.3 Verify V-037, the 2" block valve on the start up pressurization line, is closed.

10.4 Verify V-029, the well head block valve, is open. Inspect the wellhead and verify that it is ready for injection to begin.

10.5 Verify V-020, the 6" valve on the injection line, is open.

10.6 Verify XV-003 is open.

10.7 Verify FCV-341 and PCV-014 are closed.

10.8 Verify the pressures on both sides of XV-347. The pressure upstream (PIT-007) must be no more than 50 PSIG greater than the pressure downstream (PIT-008). If not then open the ½" bleed valve on PIT-

007 and bleed the line until pressures equalize. If pressure upstream is less than downstream pressure then proceed.

10.9 Open XV-347.

10.10 Open V-035, the 2" block valve on the start up pressurization line, to equalize it with the injection pipeline.

10.11 Slowly open V-037 and begin putting warm CO2 into the injection pipeline.

10.12 The injection pipeline and well will slowly come up in pressure.

10.13 When the pressure measured at PI-007 is greater than 1,000 psig open FCV-341 to 20% in Manual mode, CO_2 will flow through FCV-341 and into the injection pipeline.

10.14 Monitor TC-207D and adjust the setpoint as necessary to keep the injection temperature (PIT-009) near 80 deg. F.

10.15 Manually open or close FCV-341 to increase or decrease flow. Continue to increase until PC-005 closes or 1200 MTD rate occurs.

10.16 Pressure in the injection pipeline will continue to build until the injection pressure is high enough that all the CO_2 processed through the facility flows into the injection well or out to vent through PV-005. At this point, the system will be at steady state.

10.17 Close V-037.

10.18 The injection pipeline and the injection well are now in service.

11.0 Switch BL-101 Seal Gas from Instrument Air to Dry CO_2

11.1 Open V-408, the valve on the tee with ARX-006 the moisture analyzer downstream of the dehydration unit.

11.2 Open the manual block valve downstream of V-408.

11.3 Set the first pressure regulator downstream of V-408 to 235 psig.

11.4 Set the second pressure regulator downstream of V-408 to 50 psig.

11.5 Open the ½" three way block valve to the dry CO_2 header.

11.6 Verify that the rotometers FIX-101A and FIX-101B are set at 30 SCFH.

11.7 Verify that the PCV-101A regulator is maintaining a downstream pressure of 20 psig.

11.8 Verify that the PCV-101B regulator is maintaining a downstream pressure of 20 psig.

12.0 Start Up of Second Reciprocating Compressor

NOTE: This section assumes that the first reciprocating compressor is already running and describes the necessary steps to bring the second compressor online.

NOTE: Be sure you are familiar with this procedure prior to starting VC-201/301 to avoid unnecessary shut downs and to reduce the risk of equipment damage.

12.1 The following steps assume VC-301 will be started; if VC-201 will be started follow the same procedure substituting the appropriate VC-201 valves and instruments.
12.2 If frame oil is cold, turn on the Kim Hotstart package for VC-301 with HS-201, the on/off switch located on the Hotstart control panel.
12.3 Verify that the globe valve downstream of XV-304D is open.
12.4 Contact facility personnel and inform them that you are ready to start the reciprocating compressor VC-301.
12.5 Put the auxiliary lube oil pump Hand/Off/Auto switch HS-305 in Auto on the HMI.
12.6 Turn off the Kim Hotstart system with the HOA switch HS-301.
12.7 Put TC-307A in Auto with a setpoint of 80 deg. F.
12.8 Put TC-307B in Auto with a setpoint of 80 deg. F.
12.9 Put TC-307C in Auto with a setpoint of 80 deg. F.
12.10 Turn off the Kim Hotstart system with the HOA switch HS-301.
12.11 Verify that the following valves are in the listed position.

Tagname	Description	Position
XV-301A	VC-301 Inlet Block Valve	CLOSED
XV-301B	VC-301 Nitrogen Purge Block Valve	CLOSED
XV-303A	VC-301 Dehydration Unit Inlet Block Valve	CLOSED
XV-303B	VC-301 Dehydration Unit Bypass Valve	CLOSED
XV-304A	VC-301 Dehydration Unit Discharge Valve	CLOSED
XV-304B	VC-301 Discharge Block Valve	CLOSED

Tagname	Description	Position
XV-304C	VC-301 Recycle Valve	CLOSED
XV-304D	VC-301 Discharge Blow Down Valve	CLOSED

4.1 Verify all alarms on the compressor have been addressed. Press Acknowledge (ACK) and then RESET on the HMI to clear any present alarms or shut downs for VC-301.

4.2 Press the VC-301 start button on the HMI. The control system will execute the following sequence.

4.2.1 XV-301A will open, and CO_2 from BL-101 will flow into the VC-301 compressor system.

4.2.2 XV-303B will open to bypass the dehydration unit.

4.2.3 XV-303A will open to the dehydration unit contactor.

4.2.4 XV-304C will open to recycle all compressed flow back to the VC-301 compressor inlet.

4.2.5 Auxiliary lube pump P-302 will start and circulate oil through the compressor lubrication system.

4.2.6 After an oil pressure of 30 psig on PTX-305 is maintained for 30 seconds, the HMI will start the VC-301 compressor.

4.2.7 The VC-301 compressor will rapidly come up to speed and start compressing CO_2 provided by BL-101. All compressed CO_2 will be recycled to the inlet of VC-301 through XV-304C.

4.2.8 Auxiliary lube pump P-302 will shut down and the internal crankshaft driven oil pump P-301 will supply oil to the frame lubrication system.

4.2.9 The HMI will ask if gas from the dehydration unit needs to be purged to the vent header. Select "No" since the other compressor and the dehydration unit are already running.

4.2.10 XV-304D will open and the system will vent CO_2 through XV-304D to the plant vent header.

4.2.11 XV-304C will close, VC-301 will begin to compress CO_2. Interstage pressures on VC-301 will begin to increase up to the normal operating conditions.

4.2.12 XV-304B will open, VC-301 is now open to the injection pipeline.

4.2.13 XV-304D will close, VC-301 is now flowing CO_2 to the injection pipeline.

4.2.14 After 60 seconds, XV-304A will open.

4.2.15 XV-303B will close.
4.2.16 VC-301 is now up and running.

4.3 If necessary or desired, start up PU-404 according to the normal pump start up procedure.

5.0 Shut Down of First Reciprocating Compressor

NOTE: This section assumes that VC-201 will be the first compressor shut down. To shut down VC-301 first, follow the same procedure but substitute the VC-301 tagnames.

5.1 Shut down the VC-201 Compressor by pressing the stop button on the VC-201 local control panel. The control system will execute the following sequence:

5.1.1 The VC-201 Compressor motor will de-energize and the compressor will begin to slow down until it comes to a complete stop.

5.1.2 XV-201A, the VC-201 suction block valve will close to 0% open.

5.1.3 XV-201B, the N_2 purge block valve will close to 0% open (this will normally be closed already).

5.1.4 XV-203A, the dehydration unit inlet valve from VC-201 will close to 0% open.

5.1.5 XV-204A, the dehydration unit outlet valve to VC-201 will close to 0% open.

5.1.6 XV-203B, the VC-201 dehydration unit bypass valve will open to 100% open.

5.1.7 XV-204D, the VC-201 blow down valve will open to 100% open. CO_2 present in the VC-201 compressor will begin to vent to the vent header through XV-204D.

5.1.8 XV-204B, the VC-201 discharge valve will close to 0% open.

5.1.9 Once pressure in the compressor drops to 50 psig as measured at PTX-201A and PTX-204B, XV-201B the N_2 purge block valve will open and nitrogen will flow into the VC-201 Compressor and purge the system of CO_2. The system will purge for 30 minutes.

5.1.10 XV-201B will close to 0% open.

5.1.11 XV-204D will close to 0% open, the VC-201 compressor will now have a slight amount of positive nitrogen pressure to prevent wet CO_2 or air ingress.

6.0 Shut Down of Second Reciprocating Compressor

NOTE: This section assumes that VC-301 will be the second compressor shut down. To shut down VC-201 second, follow the same procedure but substitute the VC-201 tagnames. Shut down of both compressors will cause the PU-404 Injection Pump to shut down on low suction pressure if it is not already shut down. To shut the facility down in a more controlled manner, first shut down the PU-404 Injection Pump, then the VC-201/301 Compressors, and then the BL-101 Blower. To shut down the PU-404 pump, see the PU-404 Injection Pump procedure. The Dehydration Unit will continue to run as well and should be shut down if the injection facility will be offline for an extended period of time. To shut down the Dehydration Unit, see the Dehydration Unit Operation procedure.

6.1 Shut down the VC-301 Compressor by pressing the stop button on the VC-301 local control panel. The control system will execute the following sequence:

6.1.1 The VC-301 Compressor motor will de-energize and the compressor will begin to slow down until it comes to a complete stop.

6.1.2 XV-301A, the VC-301 suction block valve will close to 0% open.

6.1.3 XV-301B, the N_2 purge block valve will close to 0% open (this will normally be closed already).

6.1.4 XV-303A, the dehydration unit inlet valve from VC-301 will close to 0% open.

6.1.5 XV-304A, the dehydration unit outlet valve to VC-301 will close to 0% open.

6.1.6 XV-304B, the VC-301 discharge valve will close to 0% open.

6.1.7 XV-303B, the VC-301 dehydration unit bypass valve will open to 100% open.

6.1.8 XV-304D, the VC-301 blow down valve will open to 100% open. CO_2 present in the VC-301 compressor will begin to vent to the vent header through XV-304D.

6.1.9 Once pressure in the compressor drops to 50 psig as measured at PTX-301A and PTX-304B, XV-301B the N_2 purge block valve will open and nitrogen will flow into the VC-301 Compressor and purge the system of CO_2. The system will purge for 30 minutes.

6.1.10 XV-301B will close to 0% open.

6.1.11 XV-304D will close to 0% open, the VC-301 compressor will now have a slight amount of positive nitrogen pressure to prevent wet CO_2 or air ingress.

6.1.12 The dehydration unit inlet separator TK-401, contactor VS-401, and heat exchanger HE-401 will be left under the normal operating pressure of 600 psig. These items should be de-pressurized as follows prior to restarting the VC-201/301 compressors:

6.1.12.1 Crack open V-61, the 1" bleed valve on the VS-401 contactor discharge piping and slowly depressurize the inlet separator TK-401, contactor VS-401, and heat exchanger HE-401 to less than 50 psig.

6.1.12.2 Shut down the dehydration unit using the Dehydration Unit operating procedure.

7.0 Shut Down of Blower BL-101

NOTE: Shut down of the BL-101 Blower will cause a shut down of the VC-201/301 Compressors due to low suction pressure if they are not already shut down. To shut the facility down in a more controlled manner, first shut down the PU-404 Injection Pump, then the VC-201/301 Compressors, and then the BL-101 Blower.

7.1 Shut down the BL-101 Blower by pressing the stop button on the BL-101 Blower local control panel. The control system will execute the following sequence:

- 7.1.1 The BL-101 Blower motor will de-energize and the Blower will begin to slow down until it comes to a complete stop.
- 7.1.2 XV-102 will close to 0% open.
- 7.1.3 XV-101 will open to 100% open.
- 7.1.4 BL-101 Blower is now offline.

	Decatur Corn Processing	VERSION: 1.0	DOCUMENT:
ADM	Standard Operation Procedure For Extended Pipeline Shut Down	ISSUED: Oct 31, 2011	LINKAGE: None
		PAGE: Page 1 of 6	Author Brad Piggott, Trimeric Corporation

Control Page For: CO_2 Injection Pipeline Extended Shut Down Procedure

Issued: October 31, 2011

List of Control copies, location, and responsibility:

Copy #	Location	Responsibility
Original		
Copy 1		
Copy 2		

Approved by:

Quality Assurance Superintendent:_____

Department Superintendent:_____

Previous Version Issued: Original

Summary of current changes and reason for revision: None

Table of Contents

1.0 Scope 3
2.0 Definitions 4
3.0 Assumptions 4
4.0 Isolation of Injection Pipeline and Injection Well 4

1.0 Scope

The CO_2 injection facility compresses and dehydrates carbon dioxide (CO_2) from the ethanol unit and injects dry, high pressure CO_2 into a local injection well for underground storage. The facility consists of six general areas; the low pressure blower BL-101, the reciprocating compressor VC-201, the reciprocating compressor VC-301, the dehydration unit, the multistage centrifugal CO_2 pump PU-404, and the injection pipeline and wellhead. Electrical power, instrument air, cooling tower water supply and return, nitrogen, and produced water disposal are on-site utilities that are required for the CO_2 injection facility.

This procedure details the steps to take for the pipeline when the injection facility will be offline for an extended period of time. Procedures for the shutting in the injection well should be obtained from Schlumberger. Any shut down of duration longer than 12 hours is considered to be an extended shut down and actions recommended in this document for the pipeline should be taken. In cases of extreme cold weather, action may be required for shut downs with less than a 12 hour duration. When the injection facility is shut down, the carbon dioxide in the injection pipeline will be stationary and over time will reach a temperature equal to the ambient surroundings. As the temperature of the carbon dioxide trapped in the pipeline changes with the ambient temperature, the pressure inside the pipeline will also change due to the thermal expansion or contraction of the carbon dioxide fluid.

In the case of the ambient temperature being hotter than the temperature of the carbon dioxide in the pipeline, the carbon dioxide will heat and the resulting expansion will increase the pressure in the injection pipeline. If the pipeline is open to the injection well, this expansion will just cause some of the carbon dioxide to flow into the injection well past check valve V-028 and there will be little or no increase in pressure. If the injection well is isolated from the pipeline (V-029 is closed), the carbon dioxide in the pipeline will have nowhere to go and the resulting pressure increase could cause the thermal relief valves to open and vent some carbon dioxide to the atmosphere.

In the case of the ambient temperature being lower than the temperature of the carbon dioxide in the pipeline, the carbon dioxide will cool and the resulting contraction of the fluid will decrease the pressure in the injection pipeline. If the temperature of the carbon dioxide drops below the critical temperature of CO_2

which is 88 °F, then the CO_2 may become separate liquid and gas phases in the pipeline. Upon restart, the liquid phase carbon dioxide may cause slugging in the pipeline.

2.0 Definitions

2.1 None.

3.0 Assumptions

7.1. The entire injection facility will be offline for a time period greater than 12 hours.

7.2. The compression and dehydration equipment is shut down per the applicable procedures and isolated from the pipeline utilizing either automatic valves or manual valves (or both).

4.0 Isolation of Injection Pipeline and Injection Well

4.1 Verify that the compression and dehydration facility is shut down and isolated from the pipeline. There are several ways to isolate the facility; for the purposes of this procedure, it will be assumed that XV-347 is closed to isolate the compression and dehydration facility from the pipeline.

4.2 Close V-029 to isolate the injection well from the pipeline.

4.3 Slowly open V-021 and start blowing down the pipeline to the atmosphere.

CAUTION: The valve used to blow down the injection pipeline must always be at a lower elevation than the pipeline if there is a possibility that liquid CO_2 may be present or may be formed during the blowdown process. If liquid CO_2 were let out through a vent above the pipeline instead of a drain below the pipeline, the heat required to vaporize the liquid CO_2 would come from the pipe. This would cause the pipe to cool below temperatures suitable for its material of construction (carbon steel). If liquid CO_2 is drained from a valve below the pipe, the heat required to vaporize the CO_2 is transferred from the surrounding air instead of from the pipe.

4.4 Monitor the temperature and pressure inside of the pipeline with TI-009 and PI-008. Do not allow the temperature measured at TI-009 to drop below -10 °F. If approaching this temperature, close V-021 and allow the pipeline contents to heat back up to the ambient conditions.

4.5 Blow down the pipeline until the pressure is low enough to ensure that no liquid will form in the pipeline due to ambient cooling and then close the blow down valve V-021. To determine this point, use the following table.

Table 1: Target Blowdown Pressure for Injection Pipeline

Minimum Expected Ambient Temperature (°F)	Final Pipeline Pressure After Blowdown (psig)
-10	243
0	291
10	346
20	407
30	476
40	553
50	638
60	733
70	838
80	955
90	No Blow Down Required*
100	No Blow Down Required*

*At temperatures above 88 °F carbon dioxide is at its critical temperature and will not have separate liquid and vapor phases.

4.6 An example would be if the facility is shut down during a summer day and the night time temperature will drop to 70 °F. Using the table above, the pipeline should be blown down below 838 psig to ensure that no liquid will be formed during the low night time temperatures.

4.7 A cold winter day with a night time temperature dropping to 20 °F will require that the pipeline be blown down below 407.2 psig per the table above.

Appendix G: Blowout Contingency Plan

Blowout Contingency Plan

For the Illinois Basin – Decatur Project

Table of Contents

1 How to use this Plan 6

1.1 Structure of the BCP 7

2 Understand the Hazards 9

3 ACT IN THE FOLLOWING ORDER ONLY 13

4 STANDING ORDERS FOR INTERVENTION TEAMS 15

5 Understanding the Blowout – Initial Assessment 17

6 Briefing: Well Control Incident Notification Procedure 24

6.2 Notifications 25

7 Notification and Initial Actions 27

7.2 Incident Assessments 28

7.3 Level 1 Incident Assessment Procedure 28

7.4 Level 2 or Level 3 Incident Assessment Procedure 28

8 Incident Response Required 29

8.1 Response Involvement 30

9 Resources and Planning 31

9.1 Involvement of the Incident Command System (see also the ANNEX) 31

9.2 TRT: Tactical Response Team (Example) 32

9.3 IMT: Incident Management Team (Example) 33

9.4 Planning Steps for Blowout Control Overview of Stages 35

9.5 Planning Steps for Blowout Control; Up to Control Plan 36

9.6 Planning Steps for Blowout Control; To Final Control of the Well 38

9.7 Well Control Incident Data Sheet 39

9.8 Wellhead Sketch 43

9.9 Equipment Availability Sheet (Filled in is available within reasonable time and distance; blank fields are to be sourced) 45

10 Site Safety Plan/Site Control 51

10.1 Introduction to Site Safety Plan/Site Control 51
10.2 CO_2 Toxicity and Asphyxiation, Freezing, Noise and Blast Hazards 57
10.3 Blasting Hazards 58
11 Logistical Considerations for a Major Response 59
11.1 Logistics 60
11.2 Transport 62
11.3 Regional Perspective 62
11.4 Civil Works Equipment 63
11.5 Role of a Rig Contractor 64
11.6 Example Equipment List 64
11.7 Normal Oilfield Services 66
11.8 Other Requirements 67
12 Minimum Recommended Blowout Equipment 67
12.1 Specialized Equipment 67
12.2 Heavy Equipment 68
12.3 Rental Equipment 69
12.4 Metal for Fabricating Support Equipment 69
12.5 General Oilfield Supplies 70
12.6 Specialized Oilfield Supplies 71
12.7 Explosives and Associated Supplies 72
12.8 Cables, Slings and Clamps 72
12.9 Welders and Associated Equipment 73
12.10 Important Considerations 73
12.11 Personal Protective Equipment (PPE), Personnel and Equipment 74
12.12 Support Personnel 75
12.13 Wellhead and Capping Equipment 76
12.14 Summary of Critical Worldwide Vendors 77

20333 State Highway 249, Suite 200
Houston, TX 77070 USA
Tel: +1-281-378-1523 | Fax: +1-281-370-6504
www.unitedsafety.net

13 Emergency Contact List (to be kept updated) 90
14 Contractor Contact List and Phone Numbers 91
14.1 Well Intervention & Well Capping Specialists 91
14.2 Relief Well Ranging Services 91
14.3 Blowout Support Equipment and Services 91
14.4 Snubbing Services 92
14.5 Pumping Services 93
14.6 Directional Drilling Services 93
14.7 Support Services (other, logging, etc.) 94
14.8 BOP's, Valves and Tubulars, Equipment and Support Services 94
14.9 Heavy Equipment 95
14.10 Welding and Fabrication 95
14.11 Portable Tanks 95
14.12 Specialty Rentals 96
14.13 Water Source & Equipment 96
14.14 Catering Service 96
14.15 Machine Shops 96
14.16 Transportation –Land 97
14.17 Vacuum Truck Service 97
14.18 Security 97
14.19 Hotels 98
14.20 Fuel Company 98
15 Generic Blowout Scenarios and Commentary 99
15.1 Underground Blowouts 99
15.2 Surface Blowout 99
16 Debris Removal 105
17 Wellhead and BOP Removal 108

18 Wellhead Preparation, Repair and Capping Operations 115
18.1 Capping to a Flange 115
18.2 Capping to a Snub by Installing a Wellhead 116
18.3 Spin on Technique 123
18.4 Stinging to Kill 126
18.5 Conclusions 129
19 Control and Kill Operations Modeling 130
19.1 Kill Modeling 131
19.2 Model Requirements 132
19.3 Inputs and Data Acquisition 134
20 Surface Control Special Services 135
20.1 Hot Tapping and Valve Drilling 135
20.2 Freezing 136
20.3 Pneumatic Casing Cutters 137
20.4 Abrasive Jet Cutters 137
20.5 Requirements for the Halliburton Abrasive Jet Cutter 138
20.6 Explosive Jet Cutter 138
20.7 Hydraulic Simulator 138
21 Incident Command System 141
21.1 Introduction 141
21.2 Tactical Response Team (TRT) 142
21.3 On Scene Roles and Responsibilities (TRT) 144
22 ADM Incident Management & Command Post 160
22.1 Off Scene Incident Management Team (IMT) 160
22.2 Off Scene IMT Roles and Responsibilities (IMT) 161
23 Example of a Crisis Management Team (CMT) (if applicable) 188
23.1 Crisis Management Team (CMT) 188

20333 State Highway 249, Suite 200
Houston, TX 77070 USA
Tel: +1-281-378-1523 | Fax: +1-281-370-6504
www.unitedsafety.net

Introduction

1 How to use this Plan

Failing to Plan is planning to fail.

The present document lays out guidance regarding how to act and respond in the event of a well incident. This Plan will be used in conjunction with ADM's Emergency Response Plan (Document #: 180.80.SAFE.122). As such this BCP does not address the wider scope of an Emergency Response in case of a well incident. The wider scope of plant, public and environment is covered by the ERP. The BCP is specifically for first and later responders immediately related to the well incident.

If this Blowout Contingency Plan is followed, it will help to minimize the problems around a well incident as much as possible and enable to gain control over the well. This Plan follows well accepted industry practices for well incidents, especially in the Oil and Gas industry. The Plan has been adapted to Carbon Dioxide Storage and Sequestration.

Like all plans, this Plan needs to be implemented by the Organization and rehearsed from time to time in order to achieve a necessary level of informed preparedness. Only with proper adaptation and implementation paired with adequate training and information can this Plan be made successful. It is very important to do a first try out of this Plan to validate the functional performance and where necessary adjustments should be made. This needs to be repeated from time to time in a review process with validity dates.

A well Blowout is defined by a loss of control over the CO_2 contained in the underground formation. Smaller incidents at surface can evolve into a Blowout. Therefore even small incidents are covered in this Plan.

This Plan makes use of several job titles that may not be designated as such in the current Operations. The Project will provide the proper job titles at implementation.

1.1 Structure of the BCP

The BCP instructs how to avoid harm, operate safely, how to assess the situation by levels and how to develop responses correspondingly.

- The first Section deals with how to immediately avoid further harm, especially to personnel. The instructions are for those who have to be involved with the incident. For the wider scope of the Emergency Response, one is referred to ADM's ERP.
- The second Section deals with how to develop a response. During this process it may become clear that additional expertise needs to be sourced from an external contractor. Well Intervention specialists are available and in case of a Level 3 incident their consultancy would be required.
- The third Section lays out the issues of logistics and equipment needs. It describes also some possible solutions involving specialized equipment and procedures.
- The Annex deals with how the Incident Command System should function in case of a Blowout. A 3 tiered organization is laid out in order to deal adequately with the situation, on the ground level as well as organizationally.

Plan Updates and Review Schedule

DOCUMENT REVISION RECORD

	Date	Revision Description	Author		Reviewer		Approval for Issue	

PLAN DISTRIBUTION LIST (Destroy old plan when receiving new)

	Date Issued	Individuals	Groups	Received date	Rehearsal Required Yes	No

SECTION A)
FIRST ACTIONS IN A BLOWOUT

This section is about what to do immediately after a well incident has occurred.

2 Understand the Hazards

Carbon Sequestration means that Carbon Dioxide (CO_2) is injected underground. This is done under high pressure (>1000psi) resulting in Carbon Dioxide being in a Supercritical state: this means fluid is behaving like a gas.

All personnel should be aware of the following Hazards:

- The blasting effect of a CO_2 release.
- CO_2 is toxic above 5000ppm for an extended duration and above 50000ppm for a short duration
- CO_2 is heavier than air and can displace regular air, resulting in asphyxiation.
- The extreme low temperatures of a CO_2 release.
- Near the release the CO_2 may freeze moisture in the air and ice crystals may form, creating a dense fog with reduced visibility.
- Falling debris. The CO_2 jet may propel any debris and solids high up in the air.

The CO_2 may come out in a powerful jet. Particles such as sand and ice may be entrained in this jet, making it a powerful grit blast.

EVERYBODY SHOULD STAY CLEAR FROM THIS OUTFLOW

Anything exposed to the immediate outflow will be very cold at subzero temperatures with associated High Hazard for personnel.

The CO_2 concentration in the air will be very high and if exposed, unprotected personnel may succumb rapidly in a matter of minutes. SCBA equipment should be available to all personnel in an area of 1000ft from the well in order to escape safely. This SCBA equipment is only for escaping safely and is NOT suitable to stay in the exposed area!

CO_2 is invisible and odorless and heavier than air and if exiting at slow speeds and/or low wind velocity it may accumulate in dangerous concentrations in low lying areas. Evacuation routes need to be directed to higher grounds if at all possible. The migration of the CO_2 cloud will be unpredictable. Continuous monitoring of CO_2 and O_2 concentrations is required in a perimeter of 2000ft as well as continuous monitoring of wind direction and speed by means of a local windsock. Do not rely on the visible fog cloud to determine the safe area as **CO_2 may be invisibly present in high concentrations!**

The CO_2 cloud can generate a dense fog. Depending on wind direction and speed this fog can move around and engulf new areas at any time. Continuous monitoring of wind direction and speed by means of a local windsock is required.

Falling debris may be encountered further out depending on direction, velocity and mass. Proper Personal Protective Equipment (PPE) should be mandatory for all people in the area.

20333 State Highway 249, Suite 200
Houston, TX 77070 USA
Tel: +1-281-378-1523 | Fax: +1-281-370-6504
www.unitedsafety.net

SCBA Self Contained Breathing Apparatus

CO_2 Hazards: Unlike oil and gas blowouts, where fire is the major concern, in CO_2 blowouts asphyxiation is the major concern. Depending on the level of potential risk, it is required to have self contained breathing apparatus (SCBA) on-site and available for people present in the vicinity of the well.

Figure 2-1 Breathing Apparatus

This page intentionally left blank.

20333 State Highway 249, Suite 200
Houston, TX 77070 USA
Tel: +1-281-378-1523 | Fax: +1-281-370-6504
www.unitedsafety.net

3 ACT IN THE FOLLOWING ORDER ONLY

EVACUATE	• Get to a safe area immediately. • Move upwind if release is downwind of you. • Move crosswind if release is upwind of you. • Move to higher ground if possible.
ALARM	• Call for help ("man down"). • Sound bell, horn or whistle. • Call by radio or telephone; dial 4444 on ADM phones.
ASSESS	• Do a head count. • Consider other hazards.
PROTECT	• Put on breathing apparatus BEFORE attempting rescue.
RESCUE	• Remove victim to a safe area.
REVIVE	• Apply CPR if necessary.
MEDICAL AID	• Arrange transport of victim to medical aid. • Provide information to Emergency Medical Services (EMS).

**For a review of this section refer to First Aid instructions from ADM*

20333 State Highway 249, Suite 200
Houston, TX 77070 USA
Tel: +1-281-378-1523 | Fax: +1-281-370-6504
www.unitedsafety.net

This page intentionally left blank.

20333 State Highway 249, Suite 200
Houston, TX 77070 USA
Tel: +1-281-378-1523 | Fax: +1-281-370-6504
www.unitedsafety.net

4 STANDING ORDERS FOR INTERVENTION TEAMS

Listed below are **standing orders to be followed** by **intervention teams** when working on a blowout well:

- Only one man, and one alone, is to be in charge (Example: the On Scene Incident Commander).
- Assume the worst case possible and plan accordingly.
- When entering the Hot Zone, always wear PPE appropriate for the situation (at minimum Nomex undergarment with cotton coveralls, no exposed skin, all leather lace-up boots, hard hat, gloves, eye and ear protection) no matter what the well conditions.
- Only allow necessary personnel into the Hot Zone, keep staff to the minimum to get the job done.
- Maintain a constant assessment of the mental and physical state of all workers in the Hot and Warm Zones. All must be fit for duty or they must stand down.
- Assign a rescue protection team to the response team in the Hot Zone who will monitor the team constantly and immediately launch a rescue or protection procedure if needed. (Example: go in with a team to replace a downed man, etc.).
- Have EMT available when working in the Hot Zone, as well as a Medevac plan for injured personnel.
- Each responder must be qualified to do the job assigned and must be acquainted with the site safety plan and have been given all appropriate Material safety Data Sheets (MSDS) for all substances that will be encountered in the response.
- Be sure that all the responders know what the procedure to be preformed is and that the proper tools are provided.
- Review all hand signals and warning indicators.

- Make sure that each man in the response team knows what he is expected to do and that he is aware of the safety procedures in effect for abandonment.
- Keep the task to be performed simple and straight forward. Break all tasks into small manageable units of work.
- Control access to the Hot, Warm, and Cold zones. Mark "no go" zones.
- Keep alert and look around frequently, check your buddy and look to see that the rescue team is monitoring the response team.
- Set up safe havens and muster points with shielding (blast protection, etc.)
- Plan for escape routes (primary and secondary)
- Have contingency plans for changes in conditions (ex: sudden wind shift failure of lines, etc.)
- Monitor the air quality as needed (LEL, O_2, etc.)
- Only trained professionals who are acquainted with the hazards present are allowed to work in the Hot Zone.
- Do not perform work in darkness or poor visibility.
- Site control will log personnel and critical equipment in and out of the zone.
- Do not enter confined spaces unless authorized.

5 Understanding the Blowout – Initial Assessment

Causes for a possible blowout

A willful or accidental act might result in damage to the Christmas tree and/or wellhead. This could conceivably be done with heavy equipment in a malevolent act, or accidentally by a wrong maneuver with heavy equipment or during lifting operations near the well. (while moving Jersey barriers for example)

Due to the high pressure a rapid outflow (jet) of CO_2 will happen. Depending on the position of the leak, this jet may be directed vertically, horizontally or anywhere in between.

The force of the outflow can be very high and present a hazard to the immediate surroundings.

Damage above the Master valve

If Injection Supply pressure is lost

Since the formation is controlled by pressure provided by the supply line, a loss of injection pressure may induce a CO_2 release from the formation into the tubing string.

If pressure is lost in the piping system before the check valve, this valve is supposed to close by itself.

Issue: If the pressure drops, the ESD upstream will close and injection will stop. The Christmas tree will continue to leak further and pressure in the wellbore may drop more rapidly than with an ongoing injection stream. Pressure drop in the wellbore may trigger that Supercritical CO_2 will revert to gas and volumes and an influx from the formation into the wellbore may happen.

If the Christmas tree is damaged

The integrity of the Christmas tree may be compromised and CO_2 will get out. The direction of the jet will be determined by the position of the leak. It may be dangerous and/or impossible to approach the well in order to close the Master valve.

The Supercritical CO_2 in the tubing string will convert to gas and increase rapidly in volume. This will result in a violent outflow of CO_2 at a very high speed.

Due to pressure loss in the tubing string, the CO_2 in the formation may drive saltwater upwards. The outflow may also contain sand and ice crystals.

In a completely open bore hole situation the daily outflow was calculated to be 66 MMscft. In a Christmas tree or Wellhead with a smaller exit hole this may be less.

If the Master Valve can be approached and shut, control of the well may be recovered successfully. Any approach to the well site must only be done by specialists and per protocol with protective gear, including Breathing Apparatus.

If the Master Valve cannot be closed, it may be possible to hook up a kill line to the existing piping. Through this kill line weighted water could be pumped into the tubing string in order to kill the well.

Damage below the Master Valve

If the Wellhead is damaged

CO_2 will get out. Also, the tubing string hanger may be compromised. This could result in an increased weight of the tubing string on the packer. The tubing may go down into the hole. This may make it more difficult to stab into the tubing.

Depending on where the wellhead is damaged, some or all of the annulus valves may no longer be usable.

If the packer and the annulus are not damaged, the CO_2 will come only from the tubing string. In that case, it may be attempted to stab into the tubing string to pump weighted water in order to kill the well.

If the CO_2 comes through the annulus, because of a damaged packer or a hole in the tubing string, an attempt can be made to to pump through the annulus valve in order to kill the well.

It should be noted that the annulus has a hydrostatic pressure above the packer, as an additional safety. If the packer were to leak, this hydrostatic pressure may contribute to killing the well.

Influx of CO_2 into the tubing string

In the above scenarios pressures in the tubing string would fall below the formation pressure, CO_2 will migrate from the formation into the wellbore and tubing string. As discussed above, a pressure drop in Supercritical CO_2 will make the CO_2 turn into a gas with much higher volumes. If the gas is mixed with brine from the formation, this mixture will come out. A CO_2 release and brine spill will be the result.

Blowout outside of casing

A Blowout on the outside of casing is theoretically possible. In such a case the cement barrier above the formation must be defective and CO_2 could come out at surface, or more likely get into another formation. If this were the case, presumably the wellhead may still be operable as the damage is really underground. In this situation, the formation cap immediately above the storage formation needs to be sealed again by injecting cement after the well has been killed. This scenario can present several challenges that only can be addressed once the situation is understood.

The contents of the outflow

The outflow will primarily consist of CO_2.

Due to pressure loss and volume increase, the generated outflow will be very cold and CO_2 crystals (dry ice) may form in the outflow.

Formation saltwater may also be expelled from the well. The salt concentration of the formation water in this well is 200,000ppm and it is not clear whether the saltwater may freeze. If it does during the outflow, saltwater ice pellets may form.

It is likely that some sand from the formation might be entrained in the outflow. Also, there may be debris in the outflow from damaged well components: steel and perhaps cement.

Volume

Estimated calculations for outflow in an open wellbore situation were approximately 66 Million standard cubic feet per day of 99% pure CO_2. If we assume that on a calm day CO_2 would settle in a layer 200ft high from ground level (because CO_2 is heavier than air), this 1 day output would cover a 575 x 575 x 200 ft area in a maximum

concentration. Such a volume would need to be dispersed in a volume 200 times that to fall below the 5000ppm rate. This is just to illustrate that responders should be aware that intolerable levels of CO_2 can extend to a significant distance. In addition, bear in mind, the well may blow for days at the above rate and CO_2 may accumulate in dangerous concentrations in a wider area.

If the wellbore is not completely exposed (smaller hole/leak) the outflow will be less than stated above. However, due to deterioration the leak may become bigger over time.

Toxicity

There will be no H_2S hazards or other hazards from this well than CO_2 and saltwater.

CO_2 presents two kinds of health hazards:

- As an asphyxiate due to displacement of fresh air (20.5%O_2).
- And as a toxic gas.

CO_2 in concentrations >5000ppm presents a health hazard. Concentrations higher than 50000ppm present Immediate Danger to Health and Life (IDHL), depending on exposure time.

Basis for original (SCP) IDLH: The chosen IDLH is based on the statements by ACGIH [1971] that a 30-minute exposure at 50,000 ppm produces signs of intoxication, and a few minutes of exposure at 70,000 ppm and 100,000 ppm produces unconsciousness [Flury and Zernik 1931]. AIHA [1971] reported that 100,000 ppm is the atmospheric concentration immediately dangerous to life. In addition, Hunter [1975] noted that exposure to 100,000 ppm for only a few minutes can cause loss of consciousness.

Under these circumstances it will not suffice to only measure O_2 (lower limit of 19.5%), but there needs to be a direct measurement of CO_2, because of toxicity limits.

CO_2 concentrations in PPM	Symptoms
20,000 – 30,000	Shortness of breath, deep breathing
50,0000	Breathing becomes heavy, sweating, pulse quickens
75,000	Headaches, dizziness, restlessness, breathlessness, increased heart rate and blood pressure, visual distortion
100,000	Impaired hearing, nausea, vomiting, loss of consciousness
300,0000	Coma, convulsions, death

Table 5-1 CO_2 Concentrations and Symptoms

From: (Aerios 2005; IVHHN 2005)

Saltwater is a hazard as well. It can cause hygroscopic burns on exposed skin. It is also a hazard to the environment if not contained. Assets can be damaged because of its highly corrosive properties.

Combustion Engines

Due to Oxygen displacement by CO_2, combustion engines may not run properly or be usable. This may hamper response efforts that require equipment with combustion engines.

Temperature

The outflow will be very cold. Ice crystals may form as soon as the jet comes in contact with air, due to the water content of the air. The low temperatures present a hazard to people and assets, if they find themselves exposed to the jet.

Matter

The ice pellets and sand will travel at high speeds (to 30m/s which is well above sandblasting speed). This grit can have forceful and damaging impacts on anything in its stream. Abrasion may occur of any materials in its path: tubing, casing, wellhead, Christmas tree and the immediate surroundings. The abrasive effect will be proportional to the exposure time.

Visibility

The outflow will form small ice crystals when in contact with the air. This will result in a white cloud. Visibility will be reduced to zero in this cloud and may hinder any approach from a certain distance.

Saltwater

Saltwater from the formation may come out in significant quantities. It is not clear how this can be modeled. Will the saltwater and CO_2 form effervescence similar to a shaken coke bottle? Saltwater spills will damage the vegetation and will need to be contained and cleaned up. Saltwater in the wellbore may contribute to well control due to its hydrostatic properties.

In case of a saltwater spill, the saltwater will move according to grade in a northeasterly direction. From there it will flow naturally into an existing retention pond. The well site is surrounded by berms and higher grounds. If saltwater volumes would appear to be high, additional berms can be created easily with earth moving equipment. (Equipment is onsite). Saltwater spills can be cleaned up with Vacuum Trucks.

Evolution

A Blowout is a dynamic event. The situation may change rapidly. Do not assume a status quo at any time. The jet release may intensify, change direction, change in composition (solids, water) unpredictably. More wellhead components may break or be blown off. Air quality in previously thought safe areas may deteriorate rapidly because of change in dispersion, change in wind direction and speed. Saltwater may be projected into the air in various directions.

SECTION B)
RESPONSE IN A BLOWOUT

Nobody should attempt to remedy a well incident on an individual basis. Proper protocols should be followed as described below. These protocols involve various elements: Reporting the incident to the Incident Command Structure, Proper Assessment in Level 1, 2 or 3, Development of a Response Strategy based on the Level and Assessment data. Depending on the severity of the Incident different layers of Response will be developed.

6 Briefing: Well Control Incident Notification Procedure

6.1.1 On-Scene Response

The On-Scene responder will initially involve only the personnel present at the site when an incident occurs. The ranking ADM employee on site will assume the role of On-Scene Commander until the Incident Command System (ICS) is activated and the Incident On-Scene Commander takes command.

6.1.2 Health and Safety

The **first responsibility** of the *initial* On-Scene Commander will be to **ensure the safety of all personnel on site**. Actions to be taken to protect health and safety will depend on the specific nature of the emergency.

6.1.3 Data Collection

Notification to departmental authorities that a well control incident has occurred **must include sufficient data** for an assessment to be made about the severity of the incident. Prior to such notification, the *initial* On-

Scene Commander must collect data or delegate the collection of data to one or more individuals. A data collection sheet is supplied in **Section 9.7** of this document.

6.2 Notifications

For ADM operations, the first responder will typically be the **Wastewater Plant Operator Supervisor acting as Department Captain (DC).** The Wastewater Plant Operator after collecting data will notify and **inform the Incident Commander** who in turn will inform **the ADM Plant Manager and the CCS Wells Team Leader** of the Incident.

Once the Level of Incident is known, the Plant Manager or the Wells Team Leader will assist the Incident Commander and proceed to **respond** accordingly.

There may be cases where small well control incidents escalate into more severe ones. These incidents are known as Level 2 incidents and some examples of these are listed below. If this occurs it may be necessary to consult a well control specialist to assist in normalizing and controlling the well.

Level 1 This response is for incidents that on-site operations staff should be capable of handling with standard operating procedures. **The incident is of sufficient severity that there is concern for personnel safety and/or potential damage to the well or structure.** Level 1 incident classification will be subjective and may be misinterpreted by the on-site staff as routine while it has the potential to escalate to a higher severity level. Notifications are made to immediate supervisors who will approve the classification and propose control procedures. All Level 1 incidents should be appropriately documented and made available for review by other operations staff.

Level 2 This response is for well control or related incidents where there is not a SOP for recovery to normal operations. Control may require

resources in addition to the on- site operations staff and/or the use of unfamiliar, more difficult, well control procedures. The incident is of sufficient severity that there is ***DEFINITE*** concern for personnel safety and/or potential damage to the well or structure. Well Control, however, has not been lost. The Level 2 incident classification will be subjective and the final decision and activation will be made by the ADM Wells Field Superintendent and/or Wells Team Leader. These decisions will be based on the risk/consequence for further escalation during non-routine, potentially higher risk, control procedures.

Level 3

This response is for well control incidents where control of the well has been lost. **The personnel and structure are potentially in *IMMINENT DANGER.*** A Level 3 response would initiate a ramp-up to an incident response organization. Resources will potentially be required from outside the well site and the ADM Plant. Level 3 incidents have the potential to escalate further during control procedures. Further escalation may include massive pollution, loss of life, serious structural damage or total loss of the wellhead due to cratering.

7 Notification and Initial Actions

The following is the immediate notification protocol in case of a well incident.

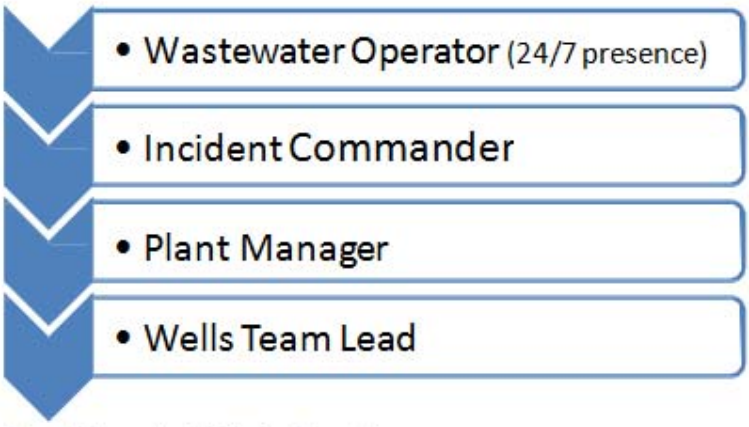

Figure 7-1 Immediate Notification Protocol

7.1.1 Incident Assessment

The Blowout Contingency Plan addresses the incident at three different levels. These Levels are widely recognized in the Industry. These levels signify the following:

Level 0 Incident:

- Normal Operations.

Level 1 Incident:

- Inexplicable wellhead pressure.
- Completion well integrity downhole leak.
- Surface testing pressure equipment integrity.
- Deviation of well control or well integrity policy.
- Exceeding 80% of working pressure and load ratings on any equipment and Tools.

Level 2 Incident:

- Well Control Malfunction.
- Casing – Approaching MASP.
- Well Control Situation – Potential for Escalation.

Level 3 Incident:

- Surface Blowout.
- Sustained Underground Blowout.
- Pipe shear.
- Loss of Primary Well Control.
- CO_2 Spill.
- Saltwater Spill.
- Uncontrolled completion integrity leak at the surface.

7.2 Incident Assessments

Typically, as shown above, an Incident Level is set by the Incident Commander and confirmed by the Wells Team Leader. However, assessments can be group assessed, if necessary, by the Wells Team Leader. **The only person authorized to reduce the level of an Incident shall be the Wells Team Leader.**

7.3 Level 1 Incident Assessment Procedure

Level 1 would be handled by the Wells Field Superintendent who will notify the Wells Team Leader in Decatur. (Normal Operations Incident).

7.4 Level 2 or Level 3 Incident Assessment Procedure

Level 2 incidents are defined as those which require assistance from the Schlumberger office to ensure protection of life, property, and/or the environment.

Level 3 incidents are defined as very serious well related incidents, which cannot be addressed by the local crew and/or with the equipment onsite. These types of incidents typically require further regional and external assistance for protection of life, property, and/or the environment.

8 Incident Response Required

For an Incident, the Wells Field Superintendent will have the responsibility of being the On Scene Commander. He will assess the incident and determine the type of response required. The Wells Field Superintendent (as per the notification protocol) will control the scene until the Wells Team Leader gives instructions and approvals on how the Wells Field Superintendent will proceed to operate and if he will continue to assume the position of On Scene Commander.

An important question is for how long a blowout could be tolerated in order to decide whether intervention is desired or not. The injection starts with an "empty" formation, which progressively gets filled with CO_2 over time. Given the accidental release rate and the required response time to stop all release from the formation, there is a point where a response may not be desirable, given the costs and risks involved with it.

Assessment Reference point

It may not be easy to assess daily outflow estimations, so it is good to know that a full open bore hole (worst case) blowout model suggests that the release rate is approximately 3x the daily injection rate.

Depending on:

a) The assessment of the daily losses.
b) What is tolerable?
c) The estimated remedial costs. A cost benefit analysis by the Operator should direct the consecutive action plan.

8.1 Response Involvement

The following table illustrates a tabular format on how the Incident Levels will be manned using the structure and positions from the ADM Organizational Chart.

8.1.1 INCIDENT LEVELS

Table 8-1 Incident Levels

Job title	Level 1	Level 2	Level 3
Wastewater Plant Operator (Department Captain)	x	x	x
Incident Commander	x	x	x
Assistant Captain	x	x	x
Plant Manager	x	x	x
Wells Team Leader	x	x	x
Communications Officer		x	x
Human Resources Manager		x	x
Quality Assurance Manager		x	x
Environmental Compliance Manager		x	x
Safety Coordinator		x	x
Injury Response Team		x	x
Confined Space Rescue Team		x	x
Corporate Management			x
Corporate Crisis Team			x

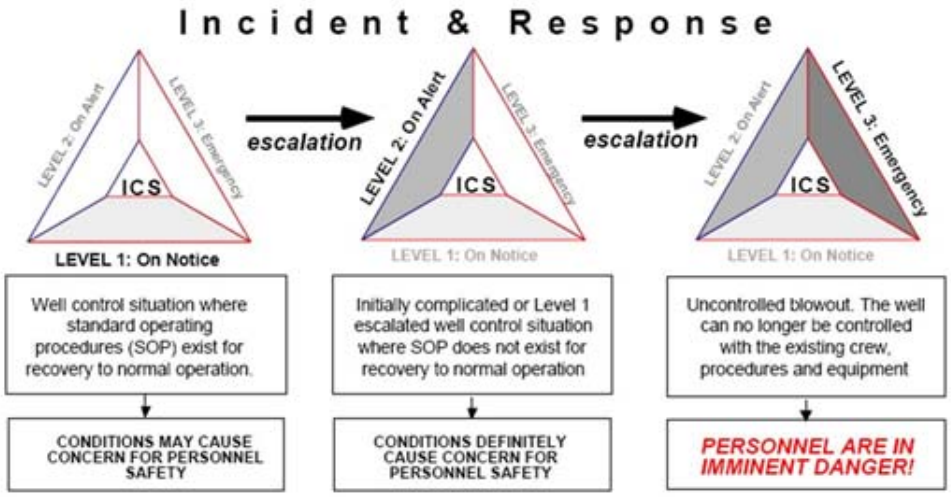

Figure 8-1 Level of Response Involvement Escalation

9 Resources and Planning

9.1 Involvement of the Incident Command System (see also the ANNEX)

The Incident Command structure is an indispensable resource needed to plan and execute the response efforts. The roles, responsibilities and checklist of the Incident Command System Team Members are presented in this document, in the ANNEX. These are basic guidelines that should be considered and used by the team members that will help organize and avoid chaos during an incident. There are three (3) teams involved, these being the Tactical Response Team (TRT) (On Scene Team), the Incident Management Team (IMT) (Off Scene Team at the Emergency Crisis Room), and, if required, the Crisis Management Team (CMT) (Corporate Team).

For some Level 2 incidents and definitely for a Level 3 incident an On Scene Command Post will be setup at a safe distance. The distance of the On Scene Command Center will depend on the Noise, Toxic, and Blasting Hazards associated with the incident. This center will be used by the Incident Management Team to carry out their respective responsibilities with the

Well Control specialist as required. The On Scene Command Center imperatively will need full scale communications equipment and desk top space for the appropriate work and tasks to be performed. Daily meetings will be held after each working tour to summarize relevant advances to the remedial effort and report these to the Incident Management Team members who will be working from an Off Scene Command Post known as the Emergency Crisis Room. This Emergency Crisis Room for ADM will be located in the ADM's Decatur Plant.

An example of a Tactical Response Team is described below. These positions may not continuously exist during normal operations, but may be called into effect for the blowout response.

9.2 TRT: Tactical Response Team (Example)

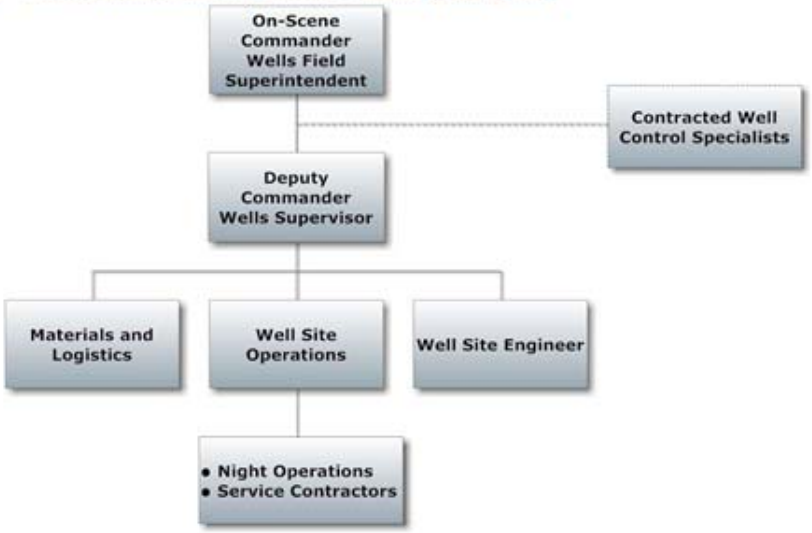

Figure 9-1 Tactical Response Team

(Ctrl)

9.3 IMT: Incident Management Team (Example)

Below is an example of an Incident Management Team (IMT). These positions may not continuously exist during normal operations, but may be called into effect for the blowout response. The IMT Incident Commander will be ADM's Incident Commander as in the Emergency Response Plan (ERP). At his discretion several supporting functions may be engaged for the purpose of managing the incident at an intermediate level.

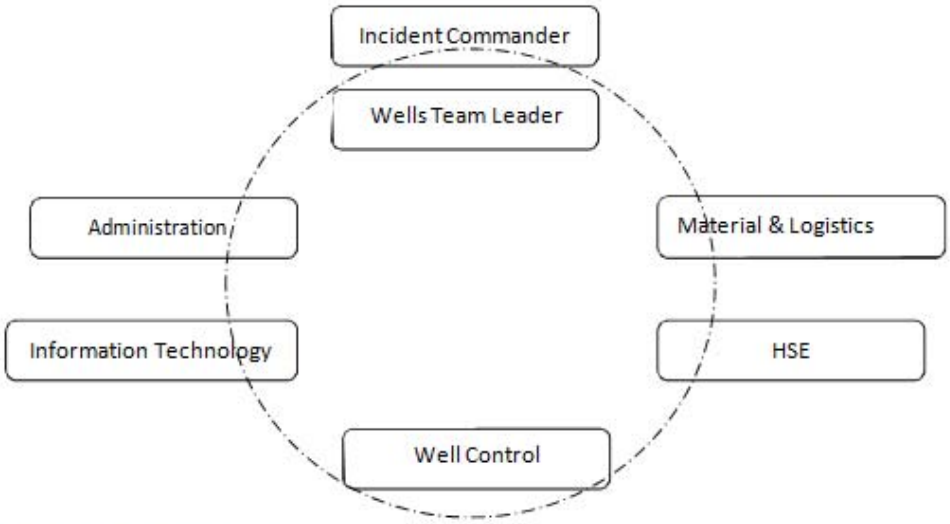

Figure 9-2 Incident Management Team

9.4 Planning Steps for Blowout Control Overview of Stages

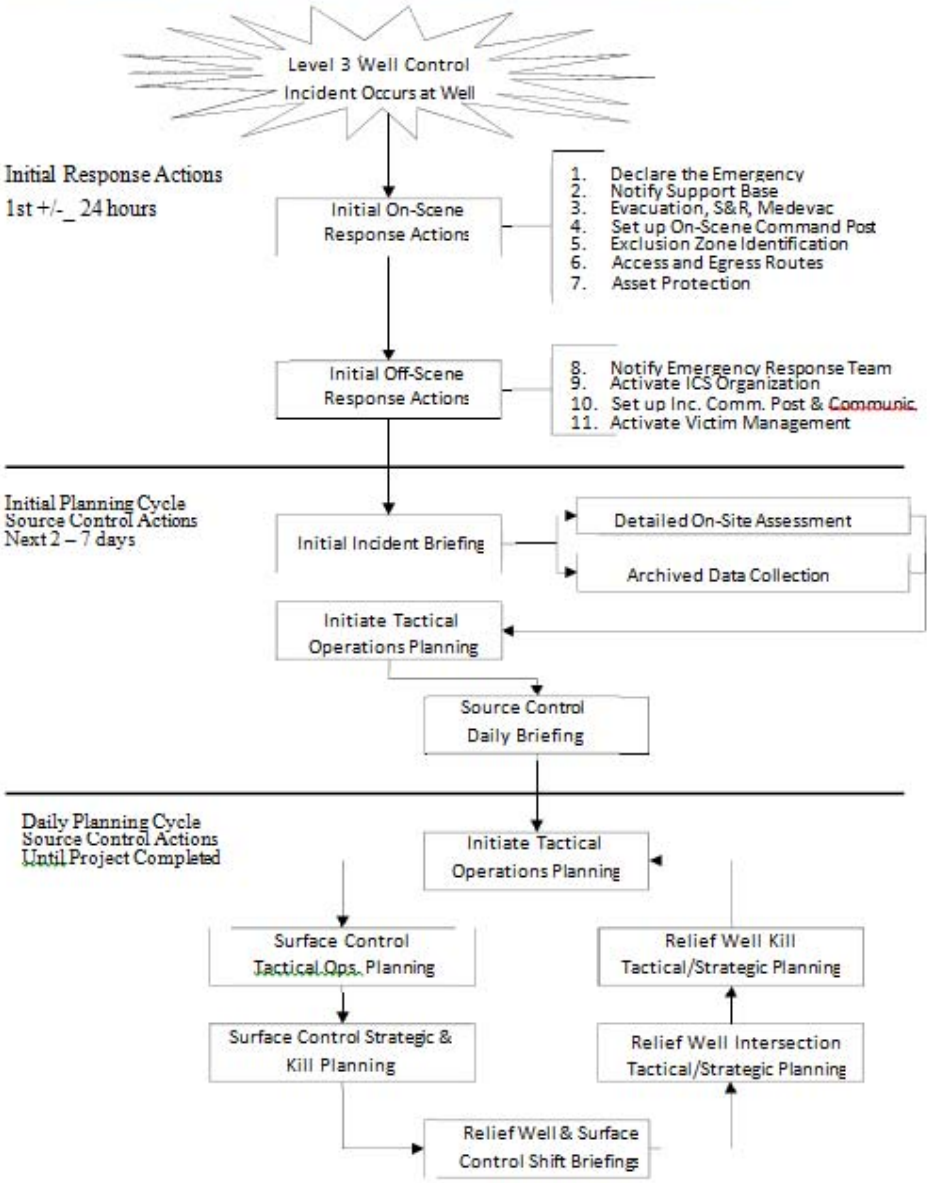

Figure 9-3 Planning Overview of Stages

9.5 Planning Steps for Blowout Control; Up to Control Plan

The following flowchart illustrates the basic initial planning cycle steps. This time period covers the time from the start of the incident until a control plan is in place.

Figure 9-4 Planning Steps to Control Plan

20333 State Highway 249, Suite 200
Houston, TX 77070 USA
Tel: +1-281-378-1523 | Fax: +1-281-370-6504
www.unitedsafety.net

9.6 Planning Steps for Blowout Control; To Final Control of the Well

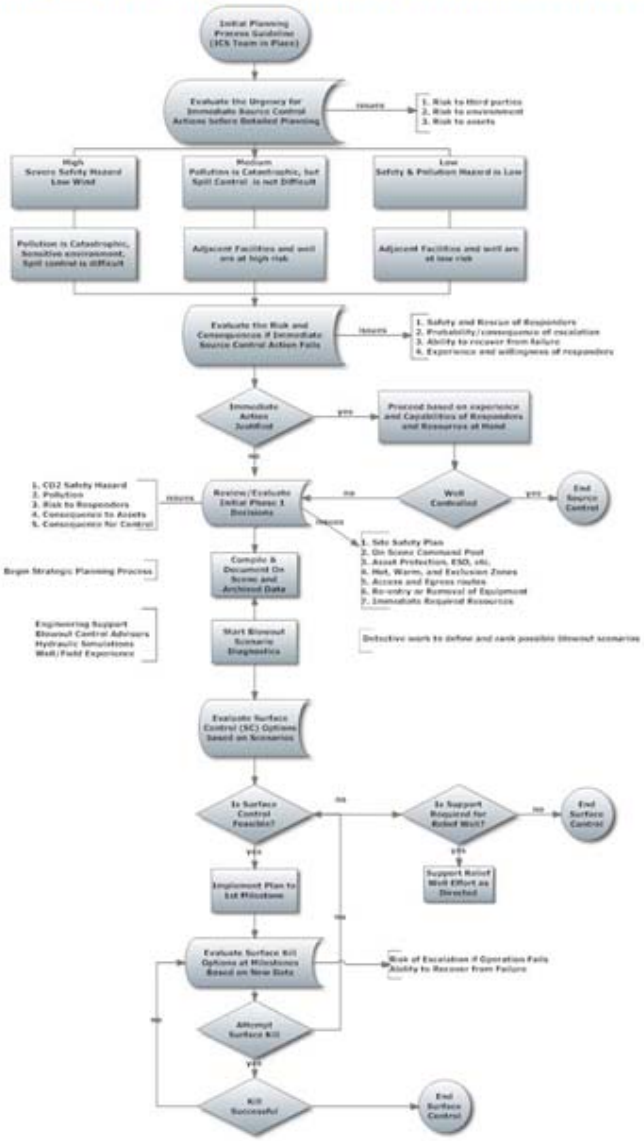

20333 State Highway 249, Suite 200
Houston, TX 77070 USA
Tel: +1-281-378-1523 | Fax: +1-281-370-6504
www.unitedsafety.net

9.7 Well Control Incident Data Sheet

The following information should be updated and together with 9.8 and 9.9 be transmitted to Intervention Teams and External Consultants in case of a blowout.

Well Control Worksheet	
General Information:	
Date:	**Time:**
Weather Condition:	
Operator Information:	
Company:	
Company Representative:	**Position:**
Phone Number:	**Fax**
Contractor:	
Rig Name/No:	
Rig Type:	
Phone Numbers On Location:	

Well Information			
Well Name:	**ADM CCS 1**		
Name:	**ADM**		
Latitude/Longitude:	**39.8765 – 88.8937**		
Well Type:	**Carbon Dioxide Injection**	**Well**	
Closest Town/City:	**Decatur, IL**	**Miles From:**	
Directions/Dock:	**North of RR track; ADM Plant**		
Closest Airport:	**St. Louis, MO**	**Runway**	**N/A**
General Wind Direction and Speed:			

Blowout Information

Emergency Level:

Underground Blowout (Level 2): **Surface Blowout (Level 3):**

Type of Blowout:

Fire: N/A **H_2S:** N/A

Oil: N/A **Gas:** N/A **CO_2:** YES **Geothermal:** N/A **Other:**

Description of Event:

Well Bore Information

MD:	**7236ft**	TVD:	Horizontal Section:	Bit Depth:	**N/A**
Relief Well Location Availability:			Closest Well:	**Observation Well**	
1st DP Size:	**N/A**	Weight:	Grade:	Length:	**N/A**
2nd DP Size:	**N/A**	Weight:	Grade:	Length:	**N/A**
3rd DP Size:	**N/A**	Weight:	Grade:	Length:	**N/A**
DC Size:	**N/A**	Weight:	Length:		
SIDPP:	**N/A**	SEOC:	MW:	Influx Size:	**N/A**
Float @:	**N/A**	BPV @:			
1st TBG Size:		Weight:	Grade:	Length:	
2nd TBG Size:		Weight:	Grade:	Length:	
3rd TBG Size:		Weight:	Grade:	Length:	
Packer:	**6363.7 feet**		Type:	**Seal bore Retrievable**	
Hole Size:			Depth:		
SITP:		SEOC:	Min. ID: Perfs:		

20333 State Highway 249, Suite 200
Houston, TX 77070 USA
Tel: +1-281-378-1523 | Fax: +1-281-370-6504
www.unitedsafety.net

Case String Data:

Surface	# Burst:	C
SEOC:		L
Intermedi	# Burst:	C
SEOC:		
Long	# Burst:	C
SEOC:		
Tie	# Burst:	C
SEOC:		
Productio	# Burst:	C
SEOC:		
Mud/Fluid Densities (ppg):		S

9.8 Wellhead Sketch

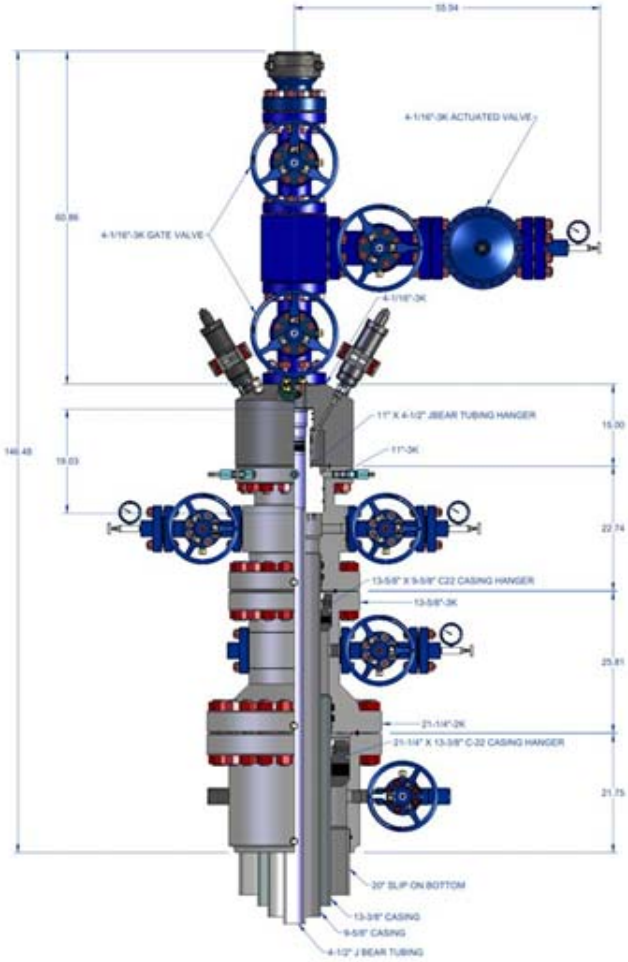

Figure 9-5 Wellhead Sketch

BOP/Wellhead Data Sheet
WELLHEAD CONFIGURATION
A Section
Type/Size:
Flange:
Sweet/Sour Service
B Section
Type/Size:
Flange:
Sweet/Sour Service
C Section
Type/Size:
Flange:
Sweet/Sour Service
Tree
Type/Size:
Flange:
Sweet/Sour Service

9.9 Equipment Availability Sheet (Filled in is available within reasonable time and distance; blank fields are to be sourced)

Equipment	Purpose	Inventory	Supplied by:	Contact Information	Originating Location	Deploy Time from Originating Location to a location By Aircraft	Deploy Time from Originating Location to a location by Rolligon or Truck (hrs)
Vacuum Trucks	Remove and transport water	(13) 2,500 gal 15 cu yards vacuum trucks (3) Pump trucks 3,000 gal each (6) Tanker trucks 5,000 gal each	Bodine Services Bodine Services Bodine Services	Scott Sargent Cell (217) 519.3936 Jeff Binkley Cell (217) 519.3917	Mt. Zion Il Mt. Zion Il	n/a	< 1HR

20333 State Highway 249, Suite 200
Houston, TX 77070 USA
Tel: +1-281-378-1523 | Fax: +1-281-370-6504
www.unitedsafety.net

Back Hoes	Digging around well head	CAT (2) Dump Trucks Flat bed	ATR ATR ATR	Chris Allen callen@atrdecatur.com (217) 451.3760	Decatur, Il	NA	< 1HR
Bulldozers	Remove wellhead debris						
Cranes	Remove debris / stage equipment	100 ton rubber tire 130 ton rubber tire 40 rubber tire		Dawes Cranes and operators			
Lighting	Visibility during Winter Months						
Monitoring	Establish Hot Zones /	(10) Drager Pac 7000 portable CO_2		dennis.woodard			

Equipment	Personnel Safety	monitors (5) Lumidor Micro Max Pro portable 4 gas monitors (4) MSA Altair 4 portable 4 gas monitors (6) Altair 5 portable 4 gas monitors (5) Altair 5 portable 5 gas monitors (2) Altair 5X portable 4 gas monitors Bacharach Leakator 10 combustible gas detector		@adm.com Cell (217) 791.4027			

Breathing Air Supply	Personnel Safety	Portable trailer tank refilling system	Decatur Fire Dept.	ADM Emergency phone # 4444			
Communication System	Communication with NSSRT, ICS, and Groups	(150) Plant radio	ADM	Plant General Foreman on duty (217) 4501.7130			
Medical Support (MERT)	Personnel Safety and MEDEVAC	Decatur Ambulance Service		ADM Emergency phone # 4444			
Mud Pumps and manifolds	Mud pumping	Pumps, Weighted Water	Franklin Well Svcs	618-943-7315	Lawrenceville, Il		3.5 hrs
Athey Wagons	Well control						
Cutting Systems	Remove old well head						

BOPE Equipment	Blowout control						
Fire Pump	Fire Suppression	Fixed loop system with hydrants					
Misc. Well Capping Equipment	Well Control	Franklin Well Svcs.	Misc. Equipment and Services	618-943-7315	Lawrenceville, Il		3.5 hrs
Snubbing	Well Control						
Welding and Fabrication	Construction	Various					
Portable Tanks	Fluid Storage	Various					
Catering Service	Camps, Housekeeping,	Various					

	Food Services						
Photograph y	Documenta ti on	Various					
Security Services	Site Security	ADM Corporate Security or Contracted Security	ADM	(217) 424-5205 OR 4444 on ADM phones			
Mud/Brine	Drilling Mud and Equipment	Franklin Well Svcs.	Franklin Well Svcs	618-943-7315	Lawrenceville, Il		3.5 hrs
Fuel	Diesel	Morgan Distributing			Decatur, Il		<1hr

10 Site Safety Plan/Site Control

10.1 Introduction to Site Safety Plan/Site Control

If a severe well control incident occurs, the On Scene Commander, and Well Control Specialist (if available) will develop a Site Safety Plan and enforce it immediately, and submit it to the Incident Commander in ADM. The plan will identify the hazards present on site and will define Site Control boundaries, including SAFE AREA and HOT ZONE boundaries, and control access to the incident site. In a CCS well control incident, the main hazards are CO_2 toxicity and asphyxiation, freezing, noise and falling debris. This Plan follows the customary "HOT", "WARM", "COLD" zone terminology. These words should however NOT be interpreted as an indication of Temperature zones.

HOT = High Danger Zone

WARM = Transitional Zone

COLD = Safe Area Zone

10.1.1 Zones

The first act of the Incident Commander must be to establish control of the site. A site must be controlled for the protection of first responders and to exclude unnecessary personnel. The basic approach is to establish three distinct zones, the exclusion zone (called the hot zone), contamination reduction zone (called the warm zone) and the support zone (called the cold zone). See 5.2.3 for Zone Identification chart.

HOT ZONE

The hot zone is the area where the actual incident occurred and hazards exists. All individuals entering the hot zone must wear the prescribed levels of personal protection. Entry and exit check points will be established at the outer boundary of the hot zone to regulate the entry and exit of personnel and equipment. The outer boundary of the hot zone is initially established by visually surveying the immediate area and determining where the hazardous materials involved are located. Monitoring equipment may also be used to define the area.

WARM ZONE

The warm zone is the transitional area between the hot zone and the cold zone. This zone generally contains area and access control points through which personnel and equipment enter and exit. Since this zone is less hazardous, personnel can wear lower levels of personal protection equipment.

COLD ZONE

The cold zone is the outermost part of the site and is considered a safe area. This is where the command post is located, along with support equipment. Normal work clothes are acceptable in this area. The command post should be situated upwind and upstream of the hot zone and should be easily accessible to highways or other transportation routes. The press is allowed in this zone. The size and distances between the hot zone, warm zone, cold zone and the command post is based on conditions specific to each incident, the material involved, and the judgment of the incident commander. The following criteria should be considered when establishing zone boundaries:

- Physical and topographical features of the site;
- Weather conditions and wind direction;
- Field measurements of air contaminants;
- Air dispersion models of the chemical(s) involved;
- Physical, chemical, toxicological, and other characteristics of the
- chemical(s) present;
- Cleanup activities;
- Adequate roads, power sources, and water

Paragraph 10.1.2 outlines a Site Safety Plan.

Common hazards to health and safety on a blowout include:

- Toxic gas concentrations
- Sub-zero temperatures
- Hazardous chemicals (concentrated saltwater)
- Dangerous noise levels
- Structural damage
- Leaking gas or fluids

10.1.2 Establishing a Site Safety Plan

Item **Action or Consideration**

1. A "SITE SAFETY PLAN" is required before well site work can start. This plan is developed and implemented by the On-Scene Commander after initial evacuation of personnel.

2. For CCS blowouts, the "HOT Zone" boundary must be realistically based on presence or the anticipated presence of >5000ppm CO_2 (or <19.5%Os) levels, rain of saltwater and ice pellets and/or propelled materials, and is principally controlled by wind direction but is influenced by the leak rate and location as well as the direction of the flow.

3. Generally, the HOT Zone will be set by inspection and not from a quantitative analysis. This will be revised as time goes on and will be monitored carefully throughout the project.

4. If the "HOT Zone" boundary is set by actual measurements, it will be done by two men with SCBA's. They should approach the blowout using a LEL meter, measuring CO_2 and O_2, a dB meter and a thermometer (if available) and check levels downwind of the well area. Initial approach should be from an upwind direction.

5. The boundary of the HOT Zone is defined as when first indication is seen of either:
   a. <19.5% O_2 level
   b. Accumulations of dry ice or CO_2 and water vapor fogs (restricted visibility vapor)
   c. >5000 ppm CO_2
   d. >90 dB noise level
   e. Frozen surfaces due to Cryogenic effect of CO_2

6. When measuring parameters, approach problem well from any possible access route (including those located downwind) and repeat this process.

7. Where possible, set HOT Zone boundaries away from these hard indicators (ex: ¼ LEL) at good control points.

8. "HOT Zone" shall be restricted to well control experts or designee of the On-scene Commander and shall be allowed in the zone on a permit only basis and only for a prescribed and defined task. The "Buddy" system will be maintained at all times.

9. Manpower with radios from plant crew, safety and production can be used at these defined "HOT Zone" control points to restrict access into the "HOT Zone". Downwind "HOT Zone" boundary must be tightly controlled and continuously monitored as variable winds can quickly change the boundary. Some access routes should be blocked to prevent accidental entry.

10. The "Safe Area" or "Cold Zone" location is based on the "measurable" HOT Zone boundaries, available work areas and access and wind direction.

11. The safe distance seen in the downwind approach of the "HOT Zone" boundary is then used as one guideline for setting the "Safe Area". Additionally, dispersion modeling can be used with the measurements taken to help predict downwind conditions if wind is blowing across the blowout.

12. The "Safe Area" is not a contour like the "HOT Zone" but is a dedicated staging area for control efforts for blowout. Access to areas inside the "HOT Zone" must only be from the "Safe Area". Other alternate paths into the "HOT Zone" are blocked."

13. Safe Area" should be accessible from two directions.

14. "Safe Area" restricted to essential personnel with proper protective equipment.

15. "Safe Area" should be in area with 0 LEL, <2000 ppm CO_2, <85 dB sound level.

16. Mark the designated "HOT Zone" and "Safe Area" on the available Emergency Response Maps for distribution and all procedures.

17. As the well and wind conditions change, the "HOT Zone" boundaries will shift. The "Safe Area" could also be moved. An example would be shifting boundaries after direction of outflow is changed based on wellhead/Christmas tree deterioration.

18. The "Warm Zone" is the route between the "Cold Zone Area" and the "Hot Zone". Control indicators (LEL levels, etc.) are continuously monitored within the "Warm Zone" at the entrance to the "Hot Zone".

19. The "Warm Zone" is restricted to essential support personnel only.

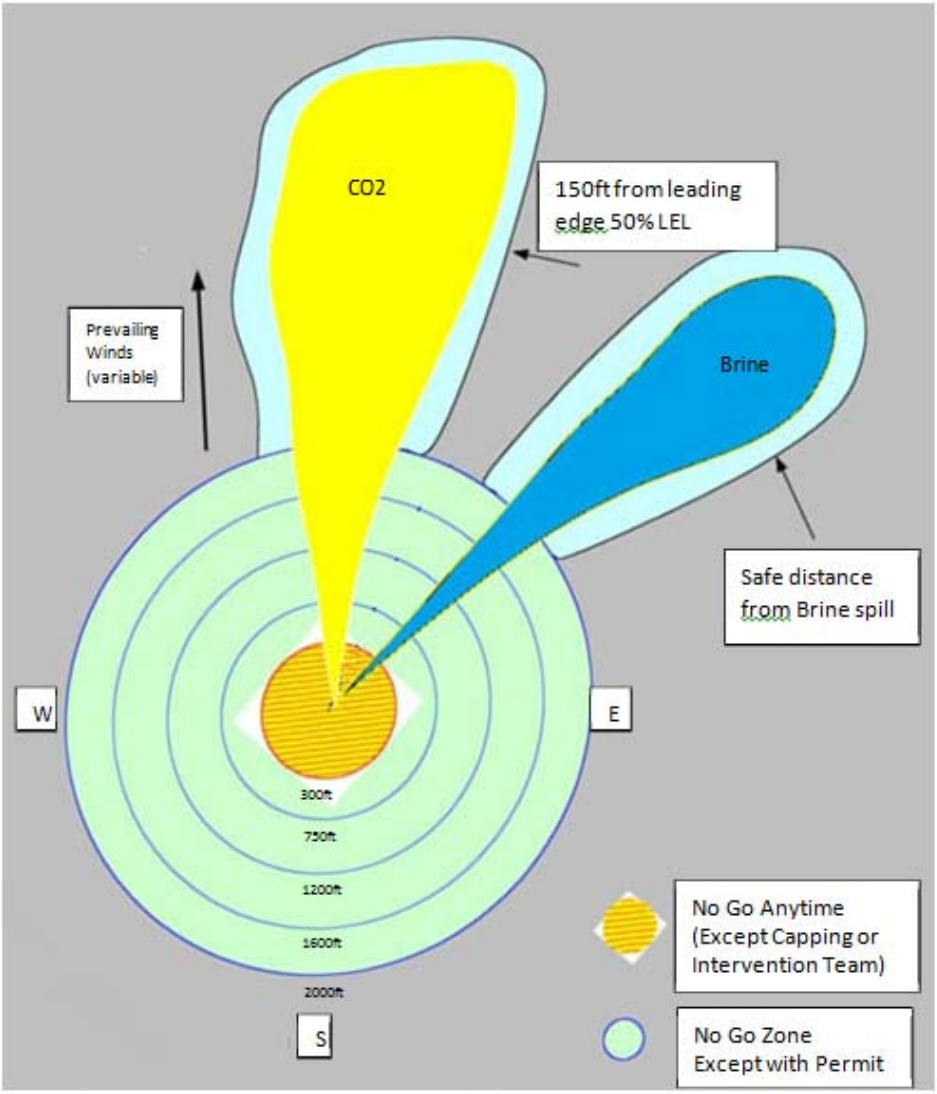

Figure 10-1 Establishing a Site Safety Plan (Example sketch)

HOT Zone Identification Flowchart

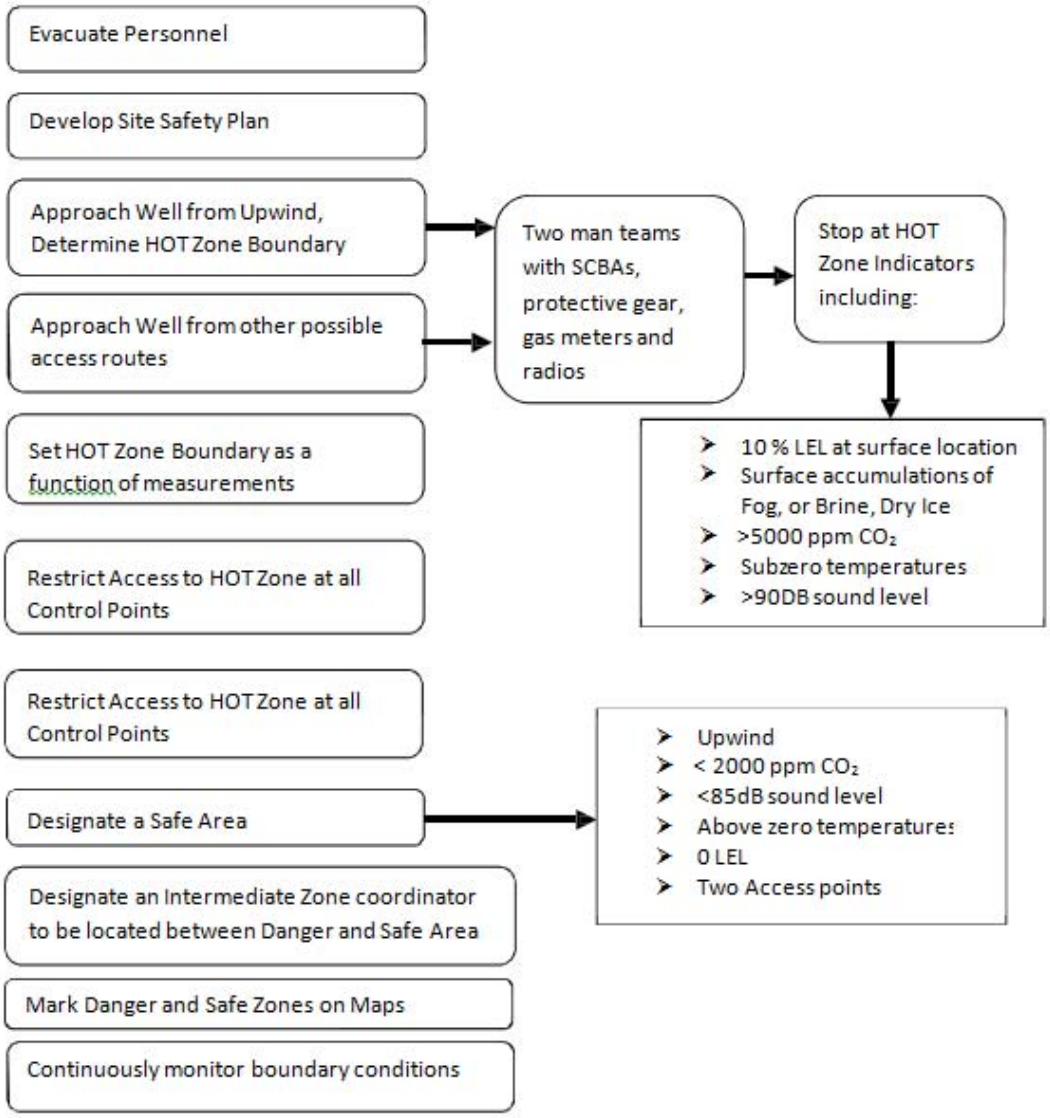

Figure 10-2 HOT Zone Identification Flowchart

10.2 CO_2 Toxicity and Asphyxiation, Freezing, Noise and Blast Hazards

10.2.1 CO_2 Toxicity and Asphyxiation

In a CO_2 blowout CO_2 may be released in large quantities. CO_2 is toxic depending on concentration and duration of exposure. In addition, a CO_2 release may displace air and thus create an O_2 deficient atmosphere. The On-scene commander and any First Responders need to be thoroughly aware of this hazard. In case Rescue activities have to be undertaken, proper protocols (see Emergency Response Plan) need to take this hazard into consideration.

10.2.2 Freezing conditions

A CO_2 well blowout will generate very low temperatures and exposure would result in severe frost bite. All surfaces in contact with the outflow may represent freezing hazards. Protective thermal clothing, including face masks, are required for any personnel needing to work in proximity to the outflow.

10.2.3 Noise Hazards

Loud noises can damage hearing, which is commonly referred to as noise induced hearing loss. This loss of hearing can be temporary or permanent, depending on the exposure. The effects vary with the level and duration of the exposure. In a blowout, which last for a limited time, hearing impairments likely to be temporary. The graphic below shows level of noise that can be tolerated.

45 dBA	85 dBA	115 dBA	135 dBA
Limit for Sleeping inside quarters	Upper limit without protection for 8 hour exposure	Short duration without protection	Upper limit short time with or without protection

10.3 Blasting Hazards

CO_2 will not burn or explode. However the transition from a Supercritical state to the gas phase can be triggered by relatively low pressure drops. This will result in extremely fast volume increases of the gas generating high outflow speeds. These jet-like outflows may carry solids and debris, which could be high hazards.

Section C)
LOGISTICS & EQUIPMENT DOCUMENT

11 Logistical Considerations for a Major Response

IMPORTANT: Prior knowledge of what will be required and how it can be obtained will be extremely important. This is precisely what this Document will outline and discuss. One of the very first assignments of the Incident Commander should be to designate the Logistics Coordinator to locate and define the availability of equipment and services required to respond to a major blowout.

In the event of a major blowout, efficient mobilization of the necessary equipment will depend on knowledge of what equipment is needed. This section provides guidance on such logistical considerations.

A listing of the equipment Boots & Coots typically requires for a large surface blowout is outlined below. If this equipment is unavailable, Boots and Coots has specialized equipment in Houston and this equipment could be mobilized from there.

11.1 Logistics

The ADM CCS plant is located northeast of Decatur, Illinois.

Well site Coordinates: **39.8765, -88.8937**
On Highway **I-72** head towards **Decatur**
Take exit **144** for **IL-48** toward **Oreana/Decatur**
Turn left onto **IL-48 S**
Take the 2nd left onto **N Brush College Rd**
Turn left onto **Brenaman Rd/Brennaman Rd**

11.1.1 CCS Well Field Perspective

11.2 Transport

The site is very accessible to heavy truck traffic. No problems are known that would impede transportation of heavy loads to the site. The nearest regular airport is in St. Louis, MO. From there it is about 2.5 hrs drive to the site.

11.3 Regional Perspective

Excluding the organization of the blowout intervention team, the most complicated and typically overlooked components of implementing an emergency project are the logistics of required services and equipment. Many of these services are very specialized and may not be available in the immediate region or area. Also, knowledge of many of these services and the companies which provide such services may be unknown to the typical oil company engineer who has minimal experience with an intervention project.

An expensive and time consuming learning curve, with sometimes disastrous results, has been evidenced in many projects which utilized standard services beyond their capabilities and overlooked details which became insurmountable. There are methods to reduce the associated problems with good logistic practices for any project. The primary one is planning for what will be required and how it can be obtained.

11.3.1 Incident Response Challenges at Field Location

- Security and safety concerns to the personnel working in the region.
- Large scale water supply for well control operations.
- Road travel between Airport and the field poses a high risk to personnel safety (winter conditions.)
- Site access and spill containment.

11.3.2 Establishing Water Supply

Probably the most important step when controlling a **Level 3** incident is establishing a water supply that will be plentiful and consistent. There is a water well onsite. Depending on plume or jet, this well may not be reachable. In that case, possibly water can be obtained from the Wastewater plant which is on the opposite side of the groundwater well and at a good distance from the injection well.

11.4 Civil Works Equipment

A critical point for any major onshore blowout is having the adequate heavy civil works equipment available. Typically a D8 bulldozer (or larger) with a Cat Model 57 or Hyster D89C winch are used.

The civil works equipment (dozers, cranes, front end loaders, trucking etc.) must be locally obtained. Normally the main civil works equipment problem is the lack of large dozers equipped with a winch. Equipment will need to be maintained and have a working equipment inventory. It may be necessary to mobilize a skilled heavy equipment mechanic with the well intervention team to help keep the equipment running.

Machine shop services needed from custom capping equipment (ex: stingers, crossovers, custom flanges) should be identified and located. The Incident Commander should assign someone to locate these providers.

ADM will need dedicated support personnel working in the areas of transport, material acquisition, logistics, contracting, accounting and communications if a major blowout occurs.

It will be wise, at some point, to gather up the blowout task force and run a test drill on response to a blowout emergency scenario. Minute by minute well reports can be generated to simulate the type of information received from the field to the task force. The response steps are taken including vendor call ups. After the simulation is completed, the exercise is criticized and then edited based on the results of the simulation.

11.5 Role of a Rig Contractor

The key to successful blowout control is fast and efficient mobilization of the required support. The following list is not complete but can be used as a reference as to what may be required. The greatest key team member if a blowout is experienced will be the rig contractor, especially if they are experienced in how to acquire local available services, equipment and materials. The rig crew may be needed to assist the well capping specialists. ADM should hold a pre-planning meeting with the rig contractor and discuss these and any additional points:

- Third party billing and purchase order system.
- Cash flow assistance (must maintain good credit with local vendors).
- Increased rig crew pay for hazard duty (triple time is not uncommon).
- Added staff from rig contractor to handle logistical duties.
- Increase camp space options.
- Spare equipment sources (ex: BOPs & choke manifolds).
- Welding/fabrication sources.
- Oilfield supply sources.
- Implementation of the fire water system (water wells, pits and pipelines).

11.6 Example Equipment List

The following is an example listing of the equipment and materials that will be required for major blowout scenarios. Not all of these items will be required nor is it a complete list as all blowouts are different and not all needs can be anticipated.

11.6.1 Worst Case Underground Blowout

The major items that may be required are as follows:

- Cementing pump and cementing lines.
- Cementing batch mixer or additional mud mixing tank.
- Cased hole wireline unit.
- Pressure/temperature log, perforators, drill collar severing tool, gyro.
- Possible additional stimulation pumps (higher rates and/or pressures required).
- Centrifugal pumps (mud transfer and circulation.

- Suction hoses and mud transfer lines (additional mud tanks and water pit).
- Sack cement and pure bentonite for bentonite – cement – diesel oil – plug.
- Medium & coarse LCM materials (KwickSeal, mica, nut plug, ground CaC03).
- Additional mud products for quick mix mud (gel, water, caustic, barite, lignosulfonate).
- Additional water supply (possible additional water wells and water storage pit).
- New seismic to map gas flood front (sustained high rate gas flow).
- Re-survey surface location from fixed reference point (severe gas flow).
- Rate gyro run on drill pipe for better relief well target (severe gas flow).
- Initiate relief well planning (severe gas flow, potential loss of surface access).
- Additional mud storage tanks.
- Snubbing unit and tools (drill pipe off bottom, drill pipe plugged, hole in casing).
- Inflatable packer (unable to dynamically kill, due to a hole in casing).
- Handheld radios for site communication.

11.6.2 Surface Blowout

The major items that may be required are as follows:

- Paramedic services: detection equipment, breathing air equipment.
- Major civil works contractor to provide: 2 dozers (Cat D7), excavator, front end loader, compactor, 150 ton tracked crane (w/hook & bucket), probable 100 ton hydraulic crane, lube/fuel support, forklifts equivalent to a cat 950 and associated support personnel and skilled operators.
- Welding/fabrication contractor: to provide welders, welding supplies and equipment, nearby fabrication shop.
- In country delivery/barge services.
- Machine shop: to provide custom toll fabrication and modification.
- Pumping/cementing services: to provide cementing unit, batch mixer/blender, spare tanks, pump lines, possible additional horsepower units.
- Medical evacuation services.
- Well capping specialists.
- Water pumps and associated equipment.
- Blowout technical advisor.
- Two air compressors (185 CFM 150 psi) for air tools and engine starting.
- Replacement valves, wellheads or BOPs. Additional ram blocks and packers, associated studs, nuts and ring gaskets.
- Fabrication steel including (1/2" – ¾" round stock, 1" steel plate, H-Beams).
- Dry ice and insulated transport box.

- Teflon tape and thread lubricant.
- Epoxy thread locking kits.
- Cotton Rags.
- Bottled drinking water.
- Rest location for well capping specialists.
- Video and still photographer to record operations.
- Location security and location access control of non essential personnel.
- Evacuation of local villagers and livestock.
- Portable generators and light plants.
- Misc. common oil field supplies and tools.
- Ten handheld radios.
- Diesel powered centrifugal pumps for fire protection, water transfer.
- One reel of 1" to 1 1/8" (25 to 28 mm) soft lay steel cable for tie-downs, snub down lines and winches.

11.7 Normal Oilfield Services

Other considerations include such services and supplies as are normally used in oilfield operations. The following is a partial list of the types of services or materials which may be needed.

Oilfield Services and Materials:

- Mud Supplies and Mixing Equipment
- Civil Works (earthmoving)
- Water Tanks
- Environmental
- Rental Tools
- Communications
- Cementing Stimulation Services
- Slick Line
- Open hole E-Line
- Cased Hole E-Line
- Well Testing
- Wellhead Maintenance
- Hot Tapping

11.8 Other Requirements

BOP and well control equipment will likely be rented locally but it may be necessary to bring in a specialized capping stack from Houston (Weatherford).

12 Minimum Recommended Blowout Equipment

12.1 Specialized Equipment

Qua	Mobili	Description
2		Water pumps, minimum 4000 gpm @150 psi
1		Athey Wagon and Boom Assembly. This equipment will require the dozer to have a hydraulic winch package specific for the size of the
1		Athey Wagon
1		Venturi Tube adapted to an Athey Wagon
1		Rake assembly adapted to an Athey Wagon
1		Stinger assembly, complete w/stinger and fittings
1		Piperack, complete with suction & discharge hoses, water monitors, pipe nipples, fittings, butterfly valves, flanges, hammer unions, aluminum pipe, high temperature cloth, etc. necessary in rigging up fire pumps (see piperack inventory
1		Job Box, complete with hand tools, hammer wrenches, brass hammers, air impact wrenches w/sockets, pipe wrenches, air grinders etc. (see job box inventory)
30		4" x 20" aluminum pipe w/indusco fittings
4		8" x 20' oil, suction and discharge hose complete with figure 100 hammer union

12	4" x 10' discharge hose complete w/ fig. 100 hammer Union
6	4" x 10' discharge hose complete w/ fig. 100 hammer union/male
6	4" x 10' discharge hose complete w/ fig. 100 hammer union/female aluminum adapter
1	4" Stang monitors complete w/ nozzle & base
1	2" – 5" Porta-Lathe cutter
1	3" – 6" Porta-Lathe cutter
1	6" – 9" Porta-Lathe cutter
1	9" – 14" Porta-Lathe cutter
1	14" – 16" Porta-Lathe cutter
1	18" – 20" Porta-Lathe cutter
1	Miscellaneous spare parts for Porta-Lathe cutter
20	Double edge cutter blades for Porta-Lathe cutter
1	Halliburton Abrasive Jet Cutter
1	Spare parts for fire pumps
1	Junk shot Manifold complete w/rope, rubber, steel balls, golf balls and other plugging material

12.2 Heavy Equipment

Quantity	Mobilized	Description
1 min.		D-8 or D-9 caterpillar bulldozer w/ Caterpillar winch
4 min.		D-8 or D-9 Caterpillar bulldozer w/ Rippers
1		1 Front end loader, large capacity for wet/muddy rough
1		Forklift, large capacity for wet/muddy rough terrain
1		Trackhoe, 235 Caterpillar or equivalent
1		150 ton crawler crane w/minimum of 100' boom (capping

2 min.	40 – 60 ton hydraulic crane (for rigging up firefighting
	Vacuum skids (for hauling firewater or discharge from well
1	Refueling skids (for refueling heavy equipment, fire pumps)

ALL EQUIPMENT TO BE PROVIDED WITH A QUALIFIED OPERATOR

12.3 Rental Equipment

Quantity	Mobilized	Description
1		185 cfm air compressor
4		Light plants, trailer mounted
1		Generator
2		Pressure Washers
4		Small all terrain vehicles

12.4 Metal for Fabricating Support Equipment

Quantity	Mobilized	Description
250 Sheets		3' x 8' sheets corrugated tin
1000 ft.		Large diameter pipe for water supply line (12" – 16")
1 sheet		2" steel plate
2 sheets		1" steel plate
2 sheets		½" – 5/8" steel plate
1500 ft.		2" x 2" x ¼" angle iron (heat shields for bulldozers)
50 sheets		3/16" or ¼" diamond plate, expanded metal or floor grating (flooring for monitor sheds, cutting sheds, etc.)

2000 ft.		2 3/8" or 2 7/8" junk tubing (structural for building monitor sheds, sheds and heat shield)
1 Lot		Casing for diverter lines
4		Small all terrain vehicles

12.5 General Oilfield Supplies

Quantity	Mobilized	Description
6		8" Figure 100 hammer unions
6		6" figure 100 hammer unions
12		4" figure 100 hammer unions
6		8" x 12" pipe nipples, threaded both ends
12		6" x 12" pipe nipples, threaded both ends
12		4" x 12" pipe nipples, threaded both ends
6		4" wafer type butterfly valves
12		4" 150# R.F. threaded flange
50		5/8" x 6 1/4" studs w/nuts both ends
10 rolls		Tie wire
20		3/8" x 15' high test chain w/grab hooks
40		2" shackles, pinned
40		1 ¾" shackles, pinned
40		1 ½" shackles, pinned
40		1 ¼" shackles, pinned
40		1" shackles, pinned
40		¾" shackles, pinned
1-roll		½" manila rope

1 roll	¾" manila rope
4	200 psi liquid filled gauges
4	600 psi liquid filled gauges
4	1000 psi liquid filled gauges
4	3000 psi liquid filled gauges
4	5000 psi liquid filled gauges
4	10000 psi liquid filled gauges
2 Boxes	Shop Rags
2	Snatch blocks for 1 1/8" cable, shackled not hooked
25	Heavy duty boards (to support pumps on water levy scaffolding, etc.) Structural lumber (2 x 4's) for heat shields, roadblocks, etc.
1	Awning

12.6 Specialized Oilfield Supplies

Quantity	Mobilized	Description
1		Pit liner for water pits
10 min.		Tanks for fire water or mud supply
2		500 ton travelling blocks (used for rig removal)
2		Large volume diesel driven water transfer pumps
2		Mud charging pumps (to feed pumping equipment and
1		Mud system – complete with mixing and circulating
Sufficient		Board Mats
1000 ft.		
20		6" or 8" Drill Collars (Dead man to skid rig)

1	Coil tubing unit
1	Snubbing Unit

12.7 Explosives and Associated Supplies

Quantity	Mobilized	Description
1000 lbs.		Explosives, 90 – 100%, general oilfield type
Dry chemical		
Blasting caps for explosives		
4		55 gallon drums
2000 ft.		14 gauge wire, 2 wire minimum

12.8 Cables, Slings and Clamps

Quantity	Mobilized	Description
2000 ft.		1 1/8" 6 x 36 soft lay cable (for rig removal)
1000 ft.		¾" 6 x 36 soft lay (slings for debris removal)
1000 ft.		5/8" 6 x 36 soft lay cable (slings for debris removal)
100		1 1/8" cable clamps
100		¾" cable clamps
100		5/8" cable clamps
10		1 ½" x 10' wire rope slings 6 x 36 soft lay cable
20		1 ¼" x 10' wire rope slings 6 x 36 soft lay cable
20		1 ¼" x 20' wire rope slings 6 x 36 soft lay cable
20		1" x 10' wire rope slings, 6 x 36 soft lay cable

20		1" x 20' wire rope slings, 6 x 36 soft lay cable
40		3/4" x 10' wire rope slings, 6 x 36 soft lay cable
40		3/4" x 20' wire rope slings, 6 x 36 soft lay cable
40		5/8" x 10' wire rope slings, 6 x 36 soft lay cable
40		5/8" x 20' wire rope slings, 6 x 36 soft lay cable

12.9 Welders and Associated Equipment

Quantity	Mobilized	Description
6		Structural welders with helper and equipment
1		Certified Welder with Helper and equipment
4		Cutting torch complete with large supply of oxygen, acetylene and accessories, 250 ft. of hose per torch, strikers, tip cleaners and spare tips
2		Long reach cutting torch, complete with large supply of oxygen, acetylene and accessories, 250 ft. of hose per torch, strikers, tip cleaners and spare tips

12.10 Important Considerations

Quantity	Mobilized	Description
1	Onsite Well	Water Source Pipeline or alternative method of transporting water to pits Transportation for work force, intervention crew Gravel, fill dirt

12.11 Personal Protective Equipment (PPE), Personnel and Equipment

Qu	Mobilized	Description
1		Emergency medical staff, ambulance (on location standbys)
1		Communication trailer complete with phone, fax and computer
1		Decontamination area for personnel with change room
1		Decontamination area for equipment
2		Wind socks
		Flagging tape
6		Two way radios with headsets
1		Work gloves, ear plugs for workforce
1		Weather forecast updated regularly
		Living accommodations for crew
		Meals for all work force
1		H2S equipment (if necessary)
1		Drinking water with water cooler and cups
1		Rain suits
1		Rubber boots, work gloves and ear plugs for workforce

12.12 Support Personnel

Quantity	Mobilized	Description
1		Boots and Coots Well Control Engineer
1		Boots and Coots Safety Coordinator
1		Roustabout or drilling crews, 6 men min.
1		Air monitoring crew with equipment
1		Pollution Response Team with equipment
1		Weatherford/WELLCAT Specialist
1		Choke Specialist
1		Wellhead Specialist
1		Snubbing Specialist
1		Service Company Well Control Team
1		Relief Well Specialist
1		String up crew for travelling blocks

12.13 Wellhead and Capping Equipment

Quantity	Mobilized	Description
1		Replacement wellhead for blowout well
1		Capping stack
1		Choke manifold
1		Choke house
1 lot		Spacer spools
1 lot		Diverter spools
1 lot		Spare flanges for diverter lines
1 lot		Spare parts for capping equipment (ring gaskets, studs, etc.
1		Extension tube for capping BOPS
1		Wellcat tool box
1		Mud/Gas Separator
1		Bowl/Slips
1 lot		Chicksan Iron Basket (loops, swings, straights, tees) Plug valves
1		Drillpipe tree

12.14 Summary of Critical Worldwide Vendors

12.14.1 Specialty Blowout Control Equipment and Services

Typical specialty equipment and services include manifolds, piping, connectors, valves, plugs, wellhead cutters freezing, tapping, stingers, and capping equipment. Application depends on the project nature, so sourcing can be performed by those experienced with blowouts, including the Blowout Advisor, other critical advisors, and the BCT. Some of the services can also be performed and/or provided by the firefighting and blowout service companies.

- Bishop Pipe Freezing Services
- Boots & Coots / IWC
- Blowout Tools
- Freeze Technology International
- Hydraulic Well Control
- Hytorc
- MYOCO
- Cudd Pressure Control
- Portalathe
- Power Chokes
- WELLCAT – Weatherford
- Schlumberger – Camco

12.14.2 Snubbing Equipment and Services

In some cases, snubbing may be the most effective response. Several companies offer professional snubbing services including supervision, snubbing units and equipment, and safety services. A review of recent experience, personnel, and safety record is important during qualification.

- Boots & Coots Hydraulic Well Control
- Blowout Tools
- Halliburton Energy Services

12.14.3 Directional Drilling Services

Effective directional drilling equipment and personnel is essential during a relief well project. Professional and precision directional drilling services is mandatory. Two directional rig supervisors, with previous relief well experience including extensive knowledge of steerable systems, horizontal drilling, MWD, surveying, rig site computers, and drilling under demanding circumstances, are recommended to provide 24-hour operational supervision. Lead time may be required for special tools not typically available in the area. Specifications for tools which provide versatility and drilling performance are recommended. Full service packages should be investigated as these can add cohesiveness to the team approach.

- Anadrill Schlumberger
- Baker Hughes INTEQ
- Halliburton Energy Services
- Scientific Drilling International

12.14.4 Specialized Directional Drilling Equipment

When a relief well is necessary, specialized directional drilling equipment can be instrumental for wellbore directional control. Special equipment may include open-hole and cased-hole sidetracking tools, surface adjustable mud motors, downhole adjustable stabilizers, large diameter hole steerable systems and a variety of non-magnetic tools and tubulars. Many of these tools can be obtained from the directional drilling company, but may not be available if in a remote location. These types of equipment are typically used to enhance drilling performance or directional response.

- Anadrill Schlumberger
- Andergauge
- Baker Hughes INTEQ
- Halliburton Energy Services
- Weatherford

12.14.5 Directional Surveying Services

Borehole surveying on a relief well will require several types of systems to ensure the borehole position uncertainty has been minimized. During drilling, a real-time data transmission MWD system is recommended, followed by a high accuracy gyroscopic tool at critical points. Possibly, the new generation electronic magnetic multishot tools may be applicable. Some applications may also require a magnetic steering tool. Many of the directional drilling service companies can provide some or all of the surveying tools. Availability of highly sophisticated systems is typically limited, especially in remote areas. Sourcing of various tools, possibly through several companies, may be warranted.

- Anadrill Schlumberger
- Baker Hughes INTEQ
- Gyrodata
- Halliburton Energy Services
- Scientific Drilling International

12.14.6 Electromagnetic Ranging Services

These specialized logging services are critical for the initial location, monitoring, and ultimate intersection of the blowout well during relief well drilling. Currently, only two companies provide professional subsurface casing detection services. Typically, availability of equipment and crews is not a complication, but should be analyzed during Phase 2 of the project. Considerations include 48- hour mobilization, and commercial aircraft transportable tools and equipment.

- Scientific Drilling International
- Vector Magnetics

12.14.7 Specialized Logging Equipment and Services

At times some specialty wellbore logging services are necessary to monitor, identify, and measure mechanical, dynamic, and geologic wellbore characteristics. Special logging tools and services may include seismic, temperature, acoustics/ noise, pressure, geology, flow, nuclear, and wellbore stability. Most of the international well logging companies can provide these services, but may require sourcing from several companies.

- Baker Atlas
- Halliburton Logging Services
- Schlumberger

12.14.8 High Pressure Pumping Services

High pressure pumping services are essential for kill operations and some specialty blowout control services. These companies can provide the required pumping plant, ancillary equipment, and experienced personnel. In some geographical locations, some companies may not have available all necessary equipment making logistics important during planning. The company selected from the pumping kill may or may not be the cementing service vendor.

- Dowell Schlumberger
- Halliburton Energy Services
- B. J. Services

12.14.9 Acidizing/Fracturing Services

Acidizing and fracturing services may be used to assist in establishing direct communication with the blowout well. This service is typically available through the major cementing and high pressure pumping companies. Many pieces of specialized equipment may be required, including stimulation vessels, pumping units, intensifiers, blenders, acidizing/fracturing fluids, chemicals, agents, and storage vessels.

- Dowell Schlumberger
- Halliburton Energy Services
- B. J. Services

12.14.10 Flexible High Pressure Hose Equipment

This item is required during rigging up the kill equipment from the pumping plant to the wellhead. During a relief well kill operation that includes a subsea BOP arrangement, several long lengths of flexible hose are necessary. These hoses come in varying diameters and pressure ratings, and may be in short supply. Availability and logistics are critical considerations for long lengths of large diameter, high pressure hose. Pumping vendors, rental/supply, and specialty equipment companies may have these items in stock.

- TechNip Coflexip
- Weatherford

12.14.11 BOP Equipment

An extensive amount of blowout prevention tools are required during an intervention project. These may include multi-ram stacks, annular preventers, diverters, hydraulically actuated valves, large diameter outlet spools, crossovers and adapters, connectors, various ram types, manifolds, hydraulic pressure units, choke and kill lines, and BOP test stumps. This equipment can be obtained from either the manufacturer or rental tool companies. For all cases, equipment should have mechanical, pressure, and function tests properly performed, and the proper certification should accompany the equipment when delivered to the logistics or event site.

- Cameron
- Hydril
- Shaffer - Varco
- WELLCAT – Weatherford

12.14.12 Wellhead Equipment and Services

During a capping operation, several wellhead components are required for an effective control response. Typical equipment used includes multi-bowl and single-bowl wellheads, crossovers, valves, seals, slips and packoffs, tubing heads, injection tools, adapters, and flanges. Many items can be obtained as an off-the-shelf item from the various suppliers and manufacturers.

- ABB Vetco Gray
- Cameron
- Dril-Quip
- FMC Energy Systems
- Wood Group Pressure Control

12.14.13 Specialty Drilling Equipment

Some specialty drilling equipment is necessary during a relief well project. This may include rotating heads, stabbing valves, modified flow lines, and right floor recorders and readouts Most of the equipment can obtained through drilling tool rental companies, drilling contractor, or may have to be fabricated on-site.

- Swaco – M I
- Williams Tool – Weatherford

12.14.14 Specialty Downhole Fishing Services

In the event of a fishing or snubbing operation, special fishing services and equipment may be required. Equipment may include those used for sidetracking, coiled tubing, packer retrieval, whipstocking, junk milling, and jarring.

- Baker Oil Tools
- National Oilwell – Bowen Tools
- Boots & Coots Pressure Control
- Dailey Geophysical
- Dowell Schlumberger
- Halliburton Energy Services

- Camco Schlumberger
- Weatherford International

12.14.15 Specialty Packers and Services

Specialty packers for temporary isolation, testing, and plugging are required. Types of packers may include ECP, mechanical, hydraulic, cased hole and open hole, wireline, and drillstring set configurations. Many specialty packers have been designed, some for kill operations, which may not be known by a local office, or available within the standard service company catalogs.

- Baker Oil Tools
- Halliburton Energy Services
- TIW

12.14.16 Perforating Services

Perforating services could be required if a relief well intervention project is undertaken. Several companies, including those offering wireline logging, can supply this service. Some companies have available special relief well perforators with proven results. In most cases, tubing-conveyed systems are the most applicable. The ability to test the perforators, under scenario conditions, for project effectiveness is important.

- Halliburton Energy Services
- Schlumberger

12.14.17 Specialty Demolition and Explosive Services

At times, demolition and explosive services may be necessary to sever or remove damaged rig equipment, tubulars, casing strings, earth, and debris. Both unshaped

and shaped charges may be required. All the blowout and intervention companies offer a limited explosives service for debris removal. Other specialty companies offer bulk purchases of explosives and experienced service personnel for the use of unconventional and/or sophisticated operations.

- Austin Explosives Company
- Halliburton Energy Services

12.14.18 Specialty Drilling Fluids Systems Equipment

Specialty drilling fluids system equipment is typically required for a relief well operation. This may include mud cleaners, high capacity centrifuges, fluids mixing and storage tanks, low restriction flowlines, effective degassers, high volume transfer pumps, and possibly flow drilling capabilities.

- Derrick Equipment
- Halliburton Energy Services
- Schlumberger
- Brandt
- M I Swaco

12.14.19 Specialty Fluids, Chemicals, and Additives

Some drilling operations may utilize some type of specialty fluids, chemicals, or additives to maximize effectiveness. These fluid components can include blocking agents, fluid loss additives, viscosifiers, borehole stabilizers, polymers, acids, weighted brines and muds, exotic heavy weighting agents, friction reducers, and plugging materials. Most of these materials are available through drilling fluids service companies.

- Franklin Well Services
- Baroid Drilling Fluids
- Drilling Specialties

- Halliburton Energy Services
- MI Swaco
- Schlumberger
- Sun Drilling Products

12.14.20 Mud Storage Equipment

Kill operations may require substantial amounts of kill fluids, including specialty fluids and materials. Storage tanks and vessels must be accessible for wellhead hookup, transferring, and transporting fluids. Land locations typically do not present storage problems. Kill fluid mixing capability and equipment is imperative for all locations, especially heavy-weighted fluids. Logistics of kill fluid mixing, transferring, and deliverability to the pumping plant are vital to the kill operation. The tanks required can be obtained from drilling contractors, pumping service companies, and/or oilfield rental vendors.

12.14.21 Seismic Services

Following a blowout event, shallow charging of formations can become pressured from the upward flow of blowout fluids. Underground flow into recipient zones and/or flow from previously normal pressured stratum can present complications during relief well drilling, final capping, and snubbing operations. Local vendors should be investigated.

- Veritas DGC, Inc.
- Halliburton Energy Services
- Western Geco
- Baker Atlas

12.14.22 Heavy Lift and Civil Works Equipment

Heavy lift and civil works equipment required during an intervention project may include cranes, forklifts, construction graders, bulldozers, track hoes, loaders, and

trucks. If a relief well surface location requires preparation, a logistics base needs to be built, a blowout site needs remediation, or specialized equipment must be moved, extensive equipment is required. Most of the equipment can be sourced locally through the current civil works contractor. Below are major manufacturers of heavy lift and civil works equipment.

- Caterpillar
- Davenport
- Kenworth
- Mustang Power Systems
- Peak Oilfield Service Company
- Stewart & Stevenson
- TNT Crane Service

12.14.23 Power Units and Generators

In remote locations, power generation to support the various components of the intervention operation will be critical. Capability to supply various voltages, amperages, and power requirements is important. Also, pneumatic and hydraulic units are typically required. In most cases, the drilling contractor, local civil works contractor, or rental equipment vendor can provide the necessary units.

- Caterpillar
- Stewart & Stevenson

12.14.24 Specialized Computer and Software Services

Computer software and services is required to assist with analysis and interpretation of all phases of the project. Types of software typically include hydraulic simulators, well control simulators, 3-D directional drilling computations, well log interpreters, gas plume, oil spill containment, heat and flare radiation, toxic gas dispersion, and drilling engineering. Most of these packages are available through small companies offering highly specialized services.

- Boots & Coots
- Well Flow Dynamics

12.14.25 Safety, Health, and Toxic Gas Detection Services and Equipment

Safety and health services are critical during all phases of the event response. Many services are required throughout the project, including emergency medical and evacuation, personnel safety equipment suppliers, and operations site safety auditor services. Some blowouts may contain toxic gases, for example H_2S, and present operational complications during well capping, relief well rig location selection, or snubbing. Services which provide detection, safety procedures, medical aid, and remediation, for personnel and operational equipment are required.

- Boots & Coots
- Key Safety Services, Inc.

12.14.26 Communication Equipment and Services

Effective communications play a vital role during any project and is especially important during a blowout. A communications system containing several 24-hour telephone, facsimile, telex, radio lines, and communication centers is recommended. Also, a dedicated satellite communication network for international direct dialing provides reliability and quick access for immediate response. A complete communications network plan must be researched, implemented, and a person dedicated to this crucial support service.

- Able Communication
- Motorola Communications and Electronics

12.14.27 Reservoir Specialist

In order to completely evaluate and analyze a blowout event, experts in reservoir engineering and petro-physics are required. Definition of the blowout rate, fluids composition and analysis, source and thief zones, wellbore stability characteristics, reservoir and drawdown properties, flow regimens, and production potential are required.

12.14.28 Environmental Engineering and Equipment Specialist

Protection of the environment should be among the primary concerns of the BCP. Environmental engineering services for spill assessment and cleanup, regulatory compliance at new and existing sites, and final site remediation are typically required. Experts familiar with current regulations, remediation technology, and petrochemical discharge are minimum prerequisites.

12.14.29 Risk Assessment Specialists

One critical area of investigation during the initial phases of an intervention project is the assessment of risk involved within the operation. Experts are required who have understanding of high profile decision tree analysis, risk assessment of emergency events, risk analysis simulation techniques, advanced probability and statistics and consequence modeling.

12.14.30 Technical Audit and Documentation Specialists

During the project, a comprehensive set of audit and documentation procedures should be implemented to record the event for legal, historical, and analytical purposes. A dedicated person or group should be made available to record meetings, to compile and assemble data, and to organize the data basing of the various documents. This function should be delegated to a person or group whose sole responsibility is maintaining the project records.

12.14.31 Insurance Entity Surveyor

An insurance company representative is typically assigned to a project to evaluate the event response operations. He also acts as a liaison between the insured and the insurance company, and participates in meetings and operations as the insurance company representative and observer.

12.14.32 Legal Representative

A legal representative should be allocated to the project. This ensures that statutory guidelines, contractual agreements, liabilities, obligatory actions, etc. have been considered and a formal response made and documented. This person or group works closely with the project manager and public relations liaison. This person or group is typically sourced from within the corporate structure.

13 Emergency Contact List (to be kept updated)

Name	Telephone number
Crisis Room	
On Site Commander	
Wells Field Superintendent	
Plant Manager	
Boots & Coots	
Communications Advisor	

Location	Medical Assistance Center	Telephone

14 Contractor Contact List and Phone Numbers

14.1 Well Intervention & Well Capping Specialists

Boots & Coots		
Houston, Texas	281-931-8884	Main Office
	281-931-8302	Fax
Email:	engineering@bncg.com	
Dee Edwards, COO	713-705-2883	Mobile
Danny Clayton, VP	713-410-5575	Mobile

14.2 Relief Well Ranging Services

Vector Magnetics (Wellspot)		
Ithaca, New York	607-273-8351	Main Office
	607-273-6137	Fax
Email:	mail@vectormagnetics.com	
Tensor Inc. (Magrange)		
Austin, Texas	512-251-2169	Main Office
	512-251-5798	Fax

14.3 Blowout Support Equipment and Services

Boots & Coots		
Houston, Texas	281-931-8884	Main Office
	281-931-8302	Fax
Email:	engineering@bncg.com	
Dee Edwards, COO	713-705-2883	Mobile
Danny Clayton, VP	713-410-5575	Mobile
Bowen Tool Inc		
Houston, Texas	(1) 713 869 6711	
Freeze Technology International inc.		
Houston, Texas	(1) 713 993 9030	
Jet Research Center, JRC (special explosives - Halliburton)		
Alvardo, Texas	(1) 817 783 5111	
Tri-State Oil Tools		
Houston, Texas	(1) 713 439 8350	

14.4 Snubbing Services

Boots & Coots		
Houston, Texas	281-931-8884	Main Office
	281-931-8302	Fax
Email:	engineering@bncg.com	
Halliburton, (OTIS Blowout Recovery Team)		

Dallas, Texas	(1) 214 418 4373
Houston, Texas	(1) 713 993 0773
Hydraulic Well Control, HWC	(1) 713 869 6711
Houma, Louisiana	(1) 504 851 2402
Houston, Texas	(1) 713 589 9746
Otis Eng. Corp. Houston	
Houston, Texas	(1) 713 650 0130

14.5 Pumping Services

Halliburton Services Blowout Team, Wellcall,	
Duncan, Oklahoma	(1) 405 251 3760 (1) 405 251 2129
BJ Services (BJ Services, Nowsco, Western Services)	
Houston, Texas	(1) 713 462 4239
Dowell Schlumberger	
Houston, Texas	432 683 1887

14.6 Directional Drilling Services

Anadrill Schlumberger	
Sugar Land, Texas	(1) 713 240 4949 (1) 405 251 2129
Baker Hughes Inteq	
Houston, Texas	(1) 713 439 8600

Halliburton Energy Services,	
Houston, Texas	(1) 713 624 2800
Houston, Texas	(1) 713 987 5100

14.7 Support Services (other, logging, etc.)

Western Atlas International Inc.	
Houston, Texas	(1) 713 972 4000
Halliburton Oilfield Services (Halliburton Reservoir Services)	
Houston, Texas	(1) 713 496 8100
Schlumberger Wireline and Testing	
Houston, Texas	(1) 713 368 8100

14.8 BOP's, Valves and Tubulars, Equipment and Support Services

ABB Vetco Gray	
Houston, Texas	(1) 713 681 4685
Cameron Iron Works Inc	
Houston, Texas	(1) 713 499 8511
FMC Corporation	
Houston, Texas	(1) 713 591 4000
Shaffer	
Houston, Texas	(1) 713 937 5000
TIW	

Houston, Texas Weatherford	(1) 713 729 2110
Houston, Texas	(1) 713 439 9400

***NOTE:** Local area service companies such as dirt contractors, civil works equipment, welders, machine shops, etc. that would be utilized in a blowout should have their names and phone numbers filled in to this segment of the BCP prior to spudding.

14.9 Heavy Equipment

Heavy Equipment

Organization Name	Address	Work Number	Fax Number
ATR	Decatur, IL	217-451-3760	

14.10 Welding and Fabrication

Welding and Fabrication

Organization Name	Address	Work Number	Fax Number

14.11 Portable Tanks

Portable Tanks (Frac Tanks, Potable Water, Etc.)

Organization Name	Address	Work Number	Fax Number
Franklin Well Services	Lawrence, IL	618-943-4680	

14.12 Specialty Rentals

Specialty Rentals (Light Plants, Trailer Houses (alt. Command Center), Port-o-cans, Sewer Plants, Portable Water Plants, Mud Plants)

Organization Name	Address	Work Number	Fax Number

14.13 Water Source & Equipment

Water Source & Equipment (10 BPM Minimum, 3" fast Line, Pits, Wells, Pumps)

Organization Name	Address	Work Number	Fax Number
Franklin Well Services	Lawrence, IL	618-943-4680	

14.14 Catering Service

Catering Service

Organization Name	Address	Work Number	Fax Number

14.15 Machine Shops

Machine Shops

Organization Name	Address	Work Number	Fax Number

14.16 Transportation–Land

Transportation - Land

Organization Name	Address	Work Number	Fax Number

14.17 Vacuum Truck Service

Vacuum Truck Service

Organization Name	Address	Work Number	Fax Number
Bodine Services	Mt Zion, IL	217-519-3936	

14.18 Security

Security (Gate Guards, Road Blockage, Supplement to Law

Enforcement)

Organization Name	Address	Work Number	Fax Number

14.19 Hotels

Hotels (Contractors and Displaced Residents)

Organization Name	Address	Work Number	Fax Number

14.20 Fuel Company

Fuel Company

Organization Name	Address	Work Number	Fax Number
Morgan Distributing			

15 Generic Blowout Scenarios and Commentary

15.1 Underground Blowouts

Underground blowouts are the most common type of blowout in the Oil and Gas industry. Most of these incidents are related to drilling operations. So, for the ADM injection well this does not apply. Next, there have been many incidents related to older production wells because of degradation of pipe, cement or the bore. Since this new well has been constructed with Chrome alloy casing and cemented all the way down, underground blowouts seem unlikely. If an underground blowout would occur, it may be difficult to detect it in a timely fashion. Diagnostics may prove difficult. Depending on the nature of an underground blowout, it may be difficult to remedy the situation. Due to this highly unlikely event and the wide variety of possibilities, we will not discuss possible strategies further here.

15.2 Surface Blowout

Generally, all surface blowouts are a result of equipment or operational failure of the wellhead equipment or near surface tubular. Some blowouts are a result of an underground blowout broaching to surface. Surface broaching generally eliminates surface access making a relief well the only viable option. Surface intervention of a broached well is only possible if the broach is stable and downwind of the well. This is generally when the broach is confined to a nearby well (water well or old dry hole with pipe). And flow rate is low. A surface blowout would be either in the wellhead equipment or during testing. These are the surface blowout scenarios that will be evaluated.

15.2.1 Likely Surface Blowout Scenarios

15.2.1.1 Annular Blowout Flow

If the annular blowout flow is occurring above the wellhead, then a failure is at the BOP flanges, bonnet seals, ram packer, steam packing or outlets has occurred.

Generally, the failures are not catastrophic but start as leaks that cut-out the affected BOP area and become blowouts. Quick detection and proper response can keep the problem from getting any worse. The first option is to isolate the leak if possible by closing the lower rams. Leaks can then be plugged by pumping plugging materials through the kill lines. In some limited cases, gas hydrates form a temporary plug, then melts, and the leak restarts, and then hydrates re-form. This cycle of leakage and the formation of hydrates, most probably will cause the leak to worsen due to erosion. The application of water ice (better) or dry ice (solid CO_2) at the leak can help hydrates form or reform and keep them from melting. Pressure can be temporarily relieved down the choke line while preparing to fix the leak and/or re-torque flanges. In all these cases response time is limited. Action must be taken at the well site immediately. Ultimately, severe cut out of equipment can eliminate all of these options. Removal and replacement of cutout equipment would be required. This could require removal of the drilling rig and would require a well capping specialist.

A minor leak at or below the wellhead could also be controlled, as discussed before, with plugging materials or dry ice induced hydrates. Replacement of cut out equipment would require skidding the rig and removal of the BOPs.

15.2.2 Capping & Control Procedure (most likely Blowout)

The use of junk shots to plug surface equipment leaks should be understood by wellsite supervisory personnel. Successful junk shot application is time dependent as the leak opening always grows. A junk shot is accomplished by removing the check valves (to prevent line plugging) and loading 1 to 2 meters of kill line with rope fiber and walnut hull. The best fibers are the Kevlar or polypropylene types (higher tensile strength than hemp or cotton). If rope is to be used, the rope pieces should be 6" long 3/8" diameter, and frayed with tight knot in the middle of the rope. The walnut hulls should be medium and coarse materials. Mud loaded with 10 ppb medium Kwick-seal should be used to displace the junk shot (Kwik seal is a blend of fiber, granular and flake material). The junk shot will bridge and seal the leak allowing conventional control operations to continue. Additional junk shots can be pumped at times to re-seal the leak. Large leaks have been controlled by pumping golf balls a head of the junk shots. A 5 gallon bucket of pre-cut rope and other bridging material can be kept

on the rig to quickly inject a junk shot to seal a surface leak. Time is saved if this is done and a rig scavenger hunt for sealing materials is not required.

Leaks can be worked on or stabilized until a fix is possible by relieving pressure. Flow out wide open chokes down the flare line should be considered. It is better to open the well up on flare line than to allow pressure containing equipment to cut-out.

The ram blocks of Cameron type "U" preventers can be replaced by well capping specialists while the well is blowing out vertically. Steps taken involve opening all BOPs to eliminate any back pressure, applying water deluge, hydraulically opening the bonnets and replacing ram blocks. This is possible as the high velocity gas flow produces a vacuum from a Venturi effect in the BOP and the bell nipple located above the BOP to be repaired. (The bonnets can be remotely hydraulically operated and quickly opened. The Venturi effect draws air into the BOP and very little gas escapes.)

15.2.3 Capping & Control Procedure (worst case surface Blowout)

This worst case blowout would require all or partial removal of the Christmas tree and wellhead down to the wellhead top flange. The concrete well cellar would not have to be removed.

If annular pressure containing equipment cannot be plugged, replaced or backed up, then the wellhead must be removed. This is a difficult operation that requires intervention by well capping specialists. A vastly greater scope of operation would be required. Basic start-up operational steps involve the following areas and should be initiated immediately.

- Possible local evacuation.
- Blockade of access and installation of wind socks.
- Establishment of upwind safety and control areas.
- Fire prevention and protection.
- Increase CO_2 gas monitoring.
- Notification for fixed wing air ambulance.
- Pre notified Medical Staff
- Mobilize civil work equipment (ex: dozers, excavators, cranes).
- Expansion or placement of alternate rig access and work pad.
- Increased camp and housing.
- Increased communication capability.
- Dedication of materials and logistics supports.

- Mobilization of well capping specialists and various special services.

Portable CO2 detection equipment can be used to monitor the relative safety. Extreme care should be taken if the wind dies and there is a horizontal flow in approaching the well. Upwind position should be stepped up with communication equipment. Access to the wellsite must be controlled.

15.2.3.1 Basic Procedure for Christmas tree and wellhead Removal and Replacement

- Flow line is removed, cut or pulled off the bell nipple.
- Choke, kill and fill up lines are removed, well is diverted through lower line.
- Control lines are re-routed.
- Well is opened vertically.
- Flange below leak is unbolted and clamps are installed.
- Crane is tied to upper Wellhead assembly.
- Capping stack is prepared and positioned.
- Clamps are jerked off and wellhead assembly is removed.
- Flange is inspected and capping stack is installed.
- Diverter, pump in and control lines are installed.
- Diverter line is opened and blind ram is closed.
- The well is diverted. Kill plan is prepared. Well may be bullheaded to kill or a snubbing unit rigged up for a bottom kill.

A Venturi tube can be used above the wellhead to raise outflow height. Better dispersion will result from vertical flow. This could be a piece of casing that is held with a boom crane. The worst case would be a high rate blowout

Experienced Oil Field Intervention Specialists Will Be Required.

15.2.4 Capping & Control Procedure (most likely scenario)

Capping and control procedure are the same as previously discussed in section 13.2.2.

15.2.5 Capping & Control Procedure (worst case)

No other surface controllable operation on land is as difficult, dangerous and costly as a melt down of a large land rig over a high rate oily gas fire. In some cases, it may be

quicker to drill a relief well than to cap the well at the surface. Generally, both control operations must be undertaken.

Well is damaged as much as it can be short of downhole deterioration of tubulars. Mobilization of the blowout technical advisor and undertaking of steps to support blowout control operation are the most critical steps to be undertaken. There will be sufficient time to fabricate or ship specialized capping equipment and mobilize fire fighters. There will be little they can do until the support is in place. The prime areas of concern are listed here. The blowout technical advisor can be a big help in prioritizing and sourcing. Major emphasis must be placed on establishing the following areas while mobilizing required services, equipment and materials.

- Setting up Response Teams.
- Expanded communication (local radio, in country phone and fax, international phone and fax).
- Dedicated transportation coordination (airfreight, local airfreight, air charter, trucking).
- Establishment of emergency operation center near the well site.
- Restrict access to site and set up personnel tracking system.
- Expansion of camp.
- Access to additional water reserves (tanks).

With this in place, quick reaction to changing well conditions and needs is possible.

An extensive communication system will be needed at the emergency operation centre near the well site. The required expanded system is in four parts.

- Site communication, via multiple channel handled radios, with headsets and clip on hand mikes, emergency operations centre is within the range of these radios, simultaneous multi party voice communication is not needed as the fire fighters use hand signals near the fire, at least two repeated frequencies and two line of site frequencies are usually needed.
- Mobile radios in vehicles or at base stations to have greater range for airport and warehouse communications.
- Several telephone numbers with capability at emergency operation center with at least two dedicated fax machines.
- At least two telephone numbers with one international phone and one dedicated fax capability at emergency operation center.

Actual operations are summarized below:

The well would be capped on exposed 7" casing. Four D8N or large dozers would be heat shielded as well as two Cat 235 back hoes to handle the excavation duty. Two dozers cut a blade width on each side of the well with two dozers pushing away excavated dirt. The back hoes are used to dig the sumps and slope the sides of the excavation for stability. The basic procedure follows:

- Approach pad is built.
- Site drainage is established and water recycling is started.
- Athey wagons are assembled and positioned behind a large dozer with powered winch.
- Specialists fire fighters begin racking away damaged equipment.
- All surface debris is removed.
- Venturi tube is positioned over flow to get better dispersion
- Location is dried out and the approach is built up.
- Venturi tube used to reduce exposure
- Dozers and excavators build a slow downward approach ramp to excavate cellar.
- Total depth of the excavation could be two meters below the base of the cellar.
- Excavator, dozer blade and abrasive jet cutter are used to break up pad and cellar.
- Wellheads are inspected and most likely cut off.
- Abrasive jet cutter is used to cut off wellhead and strip away outer casing.
- Casing head with 11" flange and massive base plate is welded to 9 5/8".
- Base plate is supported against outer casings and/or H Beams in concrete.
- Casing clamp is installed on 7".
- 7" is jacked up and hung off on pack off slips.
- Capping BOPs are dressed as needed.
- BOPs are lowered over exposed 7" casing is bolted up.
- Control lines, pump in line, pressure tap and diverter lines are rigged up.
- If 10K psi working pressure is needed, use DSA pack off flange or inverted drill pipe ram.
- Diverter line is opened.
- Upper blind ram is closed.
- The well may be bullheaded to kill flow or a 340K snubbing unit is used for bottom kill.

16 Debris Removal

Before the actual capping process can begin, access to the well is necessary. Direct access may be denied because of structural damage to remains. Debris must be removed before the intervention at the wellhead can begin. The Athey Wagon also known as the All Purpose Capping Vehicle (ACV) was developed for the purposes of working on blowing wells that can also be on fire. ATHEY WAGON applications include:

- Removing debris using hooks and rakes.
- Conveying special tools, such as abrasive jet cutters, Venturi tubes and stingers.
- Placing explosives at a "safe" distance for severing or extinguishing the fire.
- Hoisting and stabbing on capping assemblies.

There are two basic versions of the ATHEY WAGON: conventional and hydraulic. The conventional unit relies on the power of a bulldozer and its tail winch to move and position the boom. The tail winch articulates the boom while the dozer is used to position the wagon.

The hydraulic version of the ATHEY WAGON was developed primarily for the purpose of stabbing on BOPs and conveying tools that require precise positioning, such as the abrasive jet cutter. In these applications, hydraulic winches provide fine control of the boom articulation.

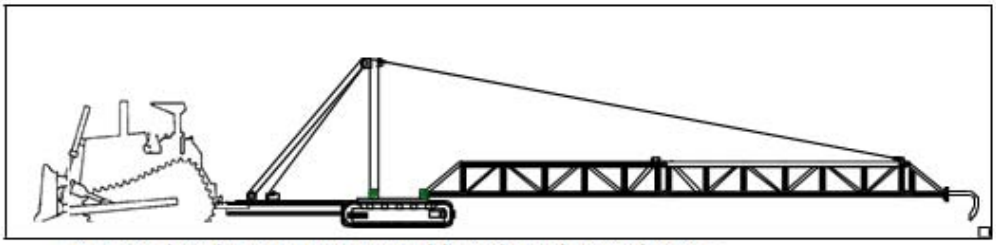

Conventional ATHEY WAGON with End Hook Attachment

The hydraulic version of the ATHEY WAGON was developed primarily for the purpose of stabbing-on BOPs and conveying tools that require precise positioning, such as the abrasive jet cutter. In these applications, hydraulic winches provide fine control of the boom articulation. The second figure illustrates the hydraulic model of the ATHEY WAGON equipped for a stab-on maneuver.

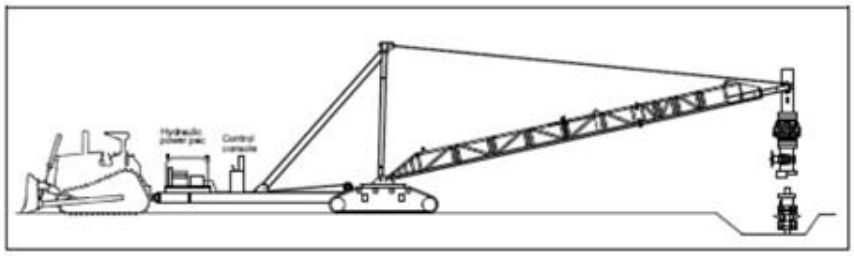

Hydraulic ATHEY WAGON Stabbing-on a BOP

20333 State Highway 249, Suite 200
Houston, TX 77070 USA
Tel: +1-281-378-1523 | Fax: +1-281-370-6504
www.unitedsafety.net

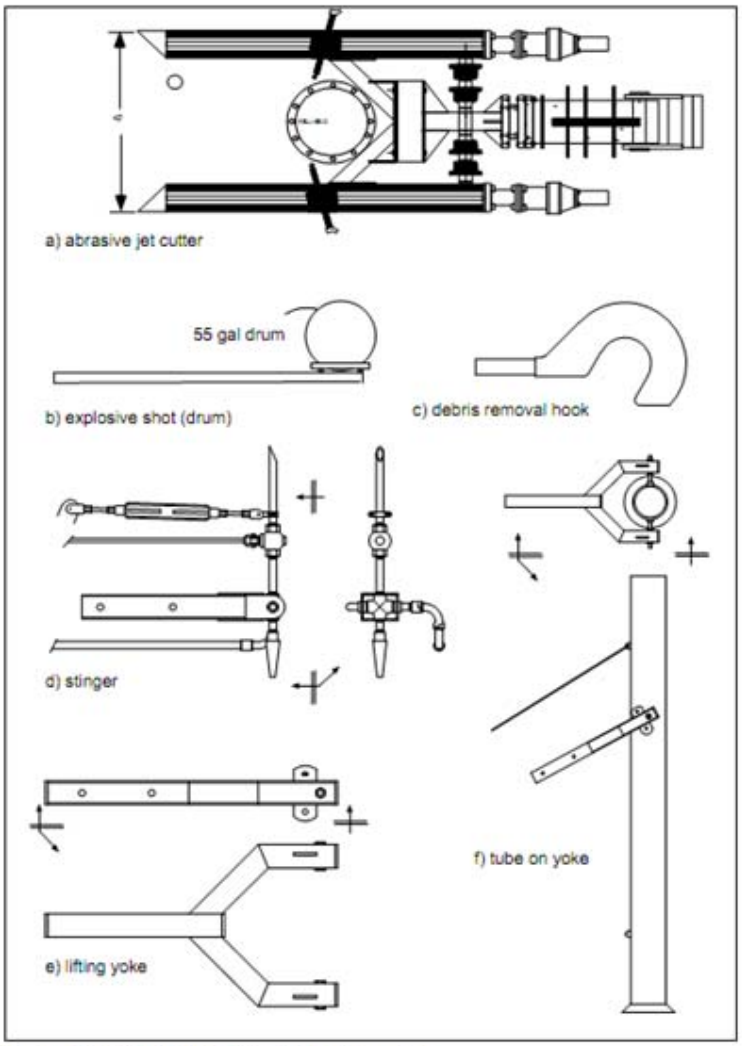

Typical ATHEY WAGON End Attachments

17 Wellhead and BOP Removal

With the fire either extinguished or directed through a Venturi tube, close inspection of the wellhead equipment can be made and work can be performed at the wellhead. The inspection will determine whether the existing equipment can be used to attach capping devices or if all or part of it will need to be removed.

Caution – Reusing wellhead components that have been involved in a blowout can be hazardous and must be thoroughly evaluated. If nothing can be salvaged, the entire wellhead and all casing strings will need to be cut off and new equipment installed.

Wellhead or BOP components must be removed when they have suffered structural damage. Falling debris can cause mechanical damage and fire can weaken the integrity of most elastomer seals.

A typical technique for removing wellhead or BOP components is to install clamps on the flange to allow the removal of all bolts. A crane is attached to the component and snub lines are installed through the bolt holes. With the snub lines tight, the clamps are removed and the component can be taken off in a controlled manner. Other removal methods have included explosives, cables, even hand operated hacksaws. Some operators have resorted to tearing the wellhead off with brute force, which often caused additional damage and prolonged capping work to repair the casing.

Explosives have proved to be a highly precise and reliable method for removing wellhead equipment or section of casing at the surface. This technology requires very specialized expertise and highly experienced personnel.

Shaped charges can be constructed to accomplish a variety of tasks, from severing the entire wellhead to removing casing valves or strings. If properly applied, shaped charges can remove an outer string of casing without damaging the next inner string.

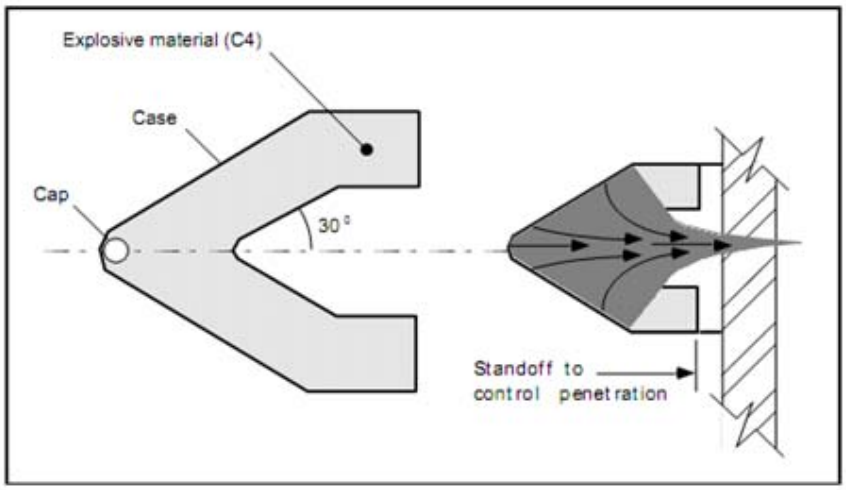

By contrast, the cable method is a crude type of friction cut. It is now considered outdated technology. Wire rope or cable is wrapped around the wellhead or casing and each end is connected to a swabbing unit. The cable is then dragged back and forth until it severs the casing. The cable method works but often takes several days. Depending on the number of casing strings and the presence of cement, the job could take from two to five days of continuous cutting. There are other disadvantages to this method. The cut is difficult to reenter if the cable is pulled out of the groove. Cable replacement is often necessary due to wear, overheating, breakage or when the operation is shut down for darkness. Cable cutting can cause the casing to become egged, further hindering the capping operation.

This equipment has performed well in the removal of damaged wellhead components and trees. It is one of two most important innovations responsible for increasing the speed of capping operations.

These two types of cutting services used are the Hydro-Jet® (by Halliburton) and the Ultra-High- Pressure (UHP) abrasive jet cutter. They both use a high pressure stream of cutting fluid carrying abrasive particles to erode away metal and cement, but they are very different tools.

The UHP equipment is an ultra-high-pressure, trailer mounted, self contained

system capable of quick mobilization and easy rig up. Rig up consists of attaching a split type track with a hydraulic advancing tractor to the wellhead above or below the area to be cut off. This is typically done by two men without a crane. The tractor and nozzle are then positioned on the track and attached to the water, abrasive and hydraulic lines.

A high pressure, low volume stream of water and abrasive slurry is pumped through the jet at the area to be cut, and a circumferential cut is performed. The device works very much like an automatic track torch used to bevel pipe. The water leaves the jet nozzle with a pressure in excess of 30,000 psi.

Generally, the nozzle used is a 0.75 mm diameter man made ruby. The calculated nozzle velocity at a typical pump rate of 4 gpm is 2,007 ft/sec (roughly equivalent to Mach 2+). The abrasive material is conveyed to the jet body through a separate line with compressed air. The abrasive enters the jet through a siphon port by Venturi effect and is discharged through the nozzle. Excess abrasive returns to the hopper through a hose.

The jet can be configured in different ways to meet specific cutting requirements. It can be set up to make circular cuts through several cemented strings of casing, with one or more blowing, to remove a damaged wellhead. The average time spent on this type of circular cut is between one and two hours with many done in less than one hour.

To cut off a wellhead completely, the jet nozzle is pointed directly at the casing, perpendicular to its axis. The jet circumnavigates the casing on the track, making a complete 360 degree cut. The jet stream usually penetrates 15 to 18 inches. Depth of penetration is highly dependent on the tracking speed.

Sometimes it is necessary to leave the inner string or production casing intact and peel back the outside strings. This is done by setting the jet at an angle where the abrasive stream never penetrates deeper than the thickness of the outer string. In either case, the cut is remotely controlled by the operator and no personnel are required close to the wellhead during the cutting operation.

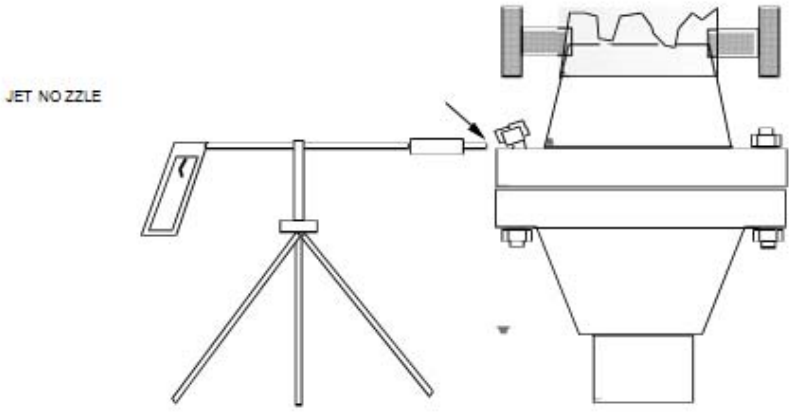

Bolt Cutting with a Hand-Held Gun and Tripod

The UHP jet cutter is not limited to circular casing cuts. For example, the track can be attached to the wellhead allowing cuts to be made under damaged valves or between flanges. One unique application of the tool is for cutting bolts and other small diameter sections. In this case, the jet cutter is mounted on a tripod stand (see Figure B.5) and the operator can cut the nuts off the top or bottom of the flange in short order. The time required to cut a single API 11" 3M stud ranges from 45 seconds to 8 minutes. Sometimes the bolts can even be cut between the flanges, depending on the severity of the damage.

The ultra high pressure cutting tool does have some limitations. The operator must physically attach the tractor band to the wellhead or casing, and when there is lateral flow this is virtually impossible to do. The cut is jagged and often irregular, perhaps because of the light construction of the tracking frame. Despite these minor limitations, the UHP jet cutter is a valuable asset to the capping operation.

Halliburton's HYDRA-JET® cutter uses a specialized carrier, allowing it to be conveyed to the wellhead using a conventional Athey Wagon boom. This cutter can be conveyed to make a vertical cut with a single nozzle or be conveyed on a horizontal carrier with a U-shaped yoke and two opposing jet nozzles (see Figure B.6). In both

versions, a small hydraulic motor drives long worm screws to advance the cutters along the length of the yoke. To make the cut, a slurry of gelled water and 1 PPG sand is pumped at 150 gpm to each 3/16" nozzle, a much higher flow rate than the UHP device and at a lower pressure of approximately 11,000 psi. The abrasive stream of high pressure slurry erodes away the casing or wellhead, tracking laterally much like a

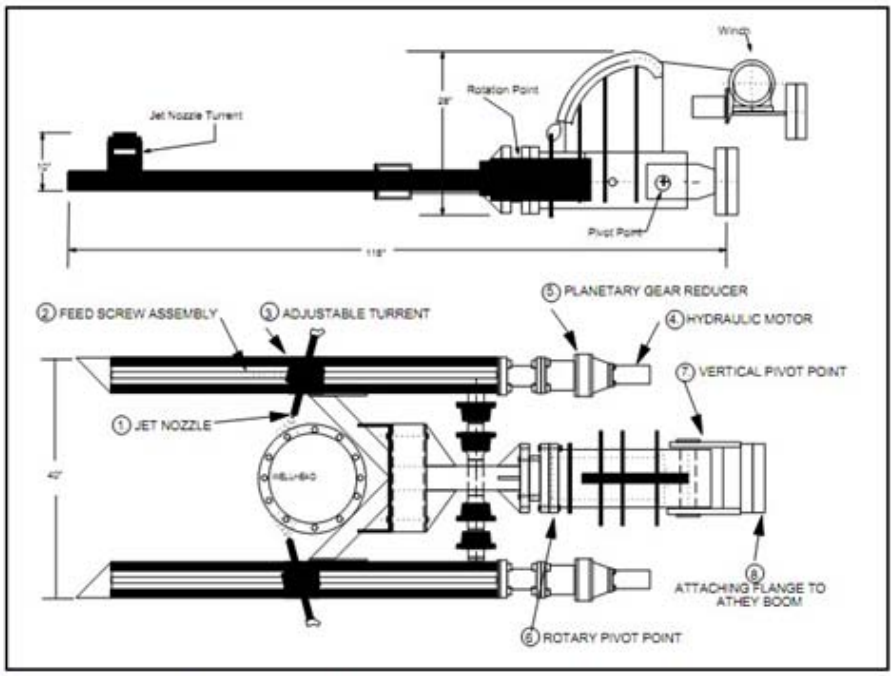

Halliburton Horizontal Cutter With Yoke Attachment
(Courtesy of Halliburton Energy Services, Duncan OK)

hacksaw blade passing through a piece of pipe.

The jet cutter requires considerably more rig up time and equipment than the UHP unit. However, the jet cutter can cut off a wellhead that is on fire or has limited access due to lateral flow, because it can be conveyed at the end of the Athey Wagon boom. It can be cooled and shielded from the fire by a water spray. Its hydraulic control lines are protected in an arrangement that resembles a tube and heat exchanger. The lines run inside the tube and water is circulated around them to cool the system.

Table B.1 Comparison of High Pressure (Hydro-Jet®) and Ultra-High Pressure (UHP) Cutting Techniques

	Ultra-High-Pressure	Hydra-Jet® Cutter
Pump Pressure	30,000 psi	10 – 12,000 psi
Discharge Rate	3 – 4 gpm	84 gpm – One Nozzle 170 gpm – Two Nozzles
Nozzles	0.5 to 0.7 mm Man-Made Ruby	3/16" Tungsten Carbide
Pump Unit	1 – Single Unit Self-Contained	1 Hydraulic Hose/Power Unit 2 Cement/Frac Trucks
Cutting Track	Circular + 200 lbs	U-Yoke and Vertical Types + 1,300 lbs.
Rig Up	No crane required attaches by hand with screw clamps ± 1 hr.	Crane and AVC boom required boom refit (if required) ± 6 hrs.
Well Conditions	Fire Extinguished. Personnel Access Required	Well can be on fire. No close personnel access required.
Fire Protection	None Available	Shielded and Water Cooled
Support Equipment	50 bbls Distilled Water Truck With Filter	1 Sand Bulk Truck 1 Gelled Water Trucks
Feed Water	Drinking Quality With Tank	Semi Clean/Brackish
Consumables	Crushed Garnet	40 Mesh Frac. Sand., 1 PPG Personnel
Personnel	4	approx. 6

20333 State Highway 249, Suite 200
Houston, TX 77070 USA
Tel: +1-281-378-1523 | Fax: +1-281-370-6504
www.unitedsafety.net

The vertical cutter has a single arm jet holder. It can be used to cut off wing valves or flow lines when necessary. The vertical cutting time of 50 – 80 minutes is comparable to the UHP, if rig up time is not considered. In either vertical or horizontal position, the finished cut is clean and smooth.

Using the HYDRA-JET® cutter does create some special logistical considerations. The higher cutting fluid volume requires the use of tank trucks to supply the fluid, and a bulk truck (or skid) to supply the sand. The high pressure, high volume fluid discharges also require more horsepower, resulting in a large equipment spread. On a small location extra dirt work may be required to accommodate all the equipment. The Athey Wagon boom must be retrofit to accommodate the carrier (unless special provisions are already built-in). The rig up time of several hours should be taken into consideration for daylight only operations.

Even with their individual disadvantages, these tools far outperform previous methods for removing damaged components on blowing or burning wells.

Table B.1 shows a comparison of the two cutters.

18 Wellhead Preparation, Repair and Capping Operations

Following the cut-off, circumferential cuts must be made on the casing strings prior to capping. These cuts can be made with an abrasive jet cutter or a portable lathe die cutter. The lathe cutter utilizes a track, air or hydraulic motor and a hardened cutting blade similar to those used on commercial lathes. The lathe cutter can be split and wrapped around the casing so it can be mounted without entering the flow. The resulting cuts have beveled machine quality edges. The casing strings are cut at different lengths to expose an adequate amount of the innermost string for capping purposes. If necessary, these cuts can be made with the well on fire.

18.1 Capping to a Flange

In large violent flows of high velocity, the snub on technique is recommended for installation of a capping stack to an existing flange. This is not a hard and fast rule, but generally the idea is to control the movement of the capping stack along its three axes by the use of hoist, tag and snub lines. This method, involves the following steps:

- Rig up a capping assembly with a mating flange, proper pressure, and temperature and service ratings. Tack weld the ring gasket to the bottom of the capping assembly flange.
- Hold a final safety and coordination meeting to insure that all personnel understand the safety procedures to be followed and the operational plans, including the contingency plan for a flash fire or explosion.
- Snub the capping assembly into the flow. Center and lower the capping assembly and mate the flanges.
- Install bolts and tighten to energize ring gasket seal.
- Connect hydraulic lines between the closing unit and capping assembly.
- Install diverter lines and kill lines as necessary, then continue with the chosen course of action, e.g., pump to kill, divert or rig up to snub.

Similar procedures are used whether the capping assembly consists of a valve arrangement or a BOP stack. Torque wrenches should be available to speed the installation and insure a proper seal since pressure testing is often impossible.

18.2 Capping to a Snub by Installing a Wellhead

This procedure is an option when the entire wellhead has been removed leaving only a casing stub. After cutting back the outer strings of casing to expose the capping string, a standard slip on weld type head is modified by adding pad eyes for attaching the snub lines. For ease of installation, this wellhead should be at least one size larger than the casing stub to be swallowed. For example, a 9 5/8" head would be used to cap a 7" casing.

As an option, a plate can be tack welded onto the side of the head to deflect the flow and improve visibility as the spool is placed into the flow over the casing stub. This plate will have to be removed before installation of the casing clamps. Snatch blocks are secured to the base of the casing with a bolt on clamp. Cables are threaded through the snatch blocks and attached to the head to facilitate.

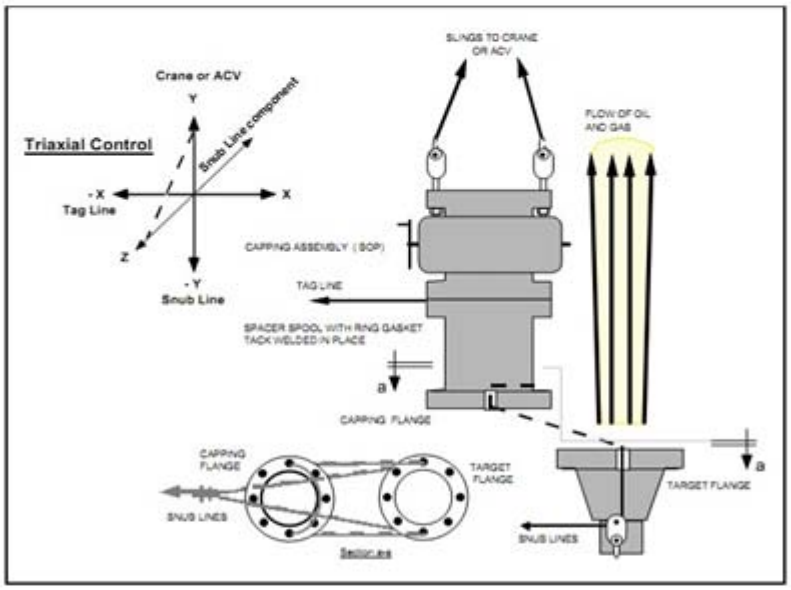

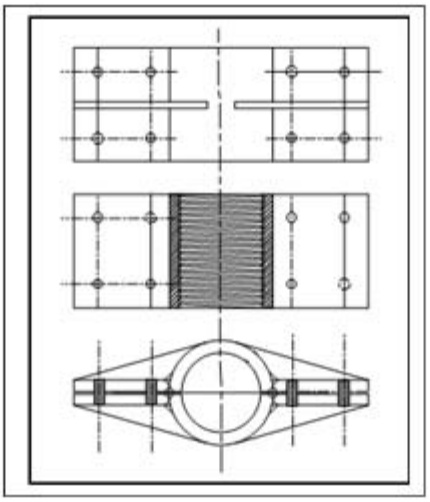

Once the head has been positioned over the casing stub, the blocks and snub line are removed. A second clamp is installed, but not tightened, between the existing clamp and the head. Hydraulic jacks are positioned between the two clamps (bottom clamp is secure, top clamp is loose). A standard set of split type casing slips are placed in the bowl and engaged by using the hydraulic jacks. After the slips are in place and the pack off is energized, the top clamp is secured under the head to hold it in place when the hydraulic jacks are released.

20333 State Highway 249, Suite 200
Houston, TX 77070 USA
Tel: +1-281-378-1523 | Fax: +1-281-370-6504
www.unitedsafety.net

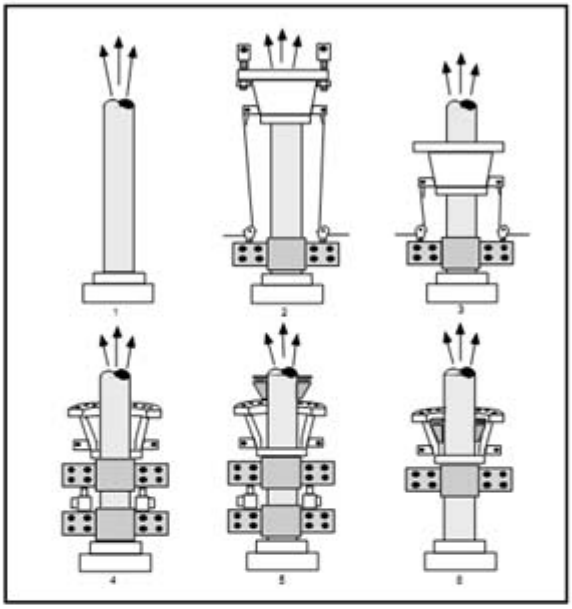

To calculate the jacking force required to fix the wellhead onto the casing stub, all subsequent operations should be considered – including:

- Rig dead loads (e.g, BOPE, snubbing equipment).
- Dynamic Loading.
- Pull from snubbing jack.
- Running casing.
- Applied pressure (e.g., shut in, bullheading)

A minimum of two calculations should be made based on the worst case scenarios for forces acting in the upward and downward direction as illustrated in Example B.1.

EXAMPLE B.1

Given:

SIWHP = 6500 psi
Casing Capped-7 5/8 in., 47.1 lbs/ft., N-80 (0.8 Fy = 880 kbf, 80% Burst = 8,392 psi)
Snubbing Jack Weight – 22,000 lbs.
BOPE Weight – 40,000 lbs.
Snubbing String – 3 ½ in., 15.5 lbs/ft., S-135 DP (80% Fy = 464.8 kbf) Measured

Total Depth (MD) – 15,000 ft.

Determine: a) Maximum upward & b) downward forces on wellhead (Fig. B.10)

F_{ew} = Equipment dead weight (weight of snubbing jack, BOPs etc) Fp = Pipe

weight [ppf*pipe depth (ft)]

Fp-a = Pressure area effect (internal pressure * cross sectional area casing ID) Worst Case – Upward Forces:

Bullheading at 80% burst pressure of casing with no pipe in hole.

$\Sigma F = F_p + F_{ew} + F^1$

$F_p = 0$

F_{ew} – 62,000 lbf392

$F1 = \Pi/4\ (6.375^2)\ (8{,}392\ psi) \Rightarrow 267{+}.865 lbf$

Therefore:

$\Sigma F = F_p + F_{ew} + F_1$
$\Sigma F = 0 - 62{,}000 + 267{,}865$

$\Sigma F = 205{,}865$ lbf ⇧

Worst Case – Downward Forces:

Pipe on bottom (stuck) with wellhead pressure @ 0 PSI. Pull 80% Fy of workstring.

Fp = 0.8 Fy workstring = - 464,800 lbf.

Few = 62,000 lbf

20333 State Highway 249, Suite 200
Houston, TX 77070 USA
Tel: +1-281-378-1523 | Fax: +1-281-370-6504
www.unitedsafety.net

Ft = 0 lbf

Therefore:

$\Sigma F = F_p + F_{ew} + F_1$

$\Sigma F = -464{,}800 - 62{,}000 = 0$

$\Sigma F = 205{,}865$ lbf ⇩

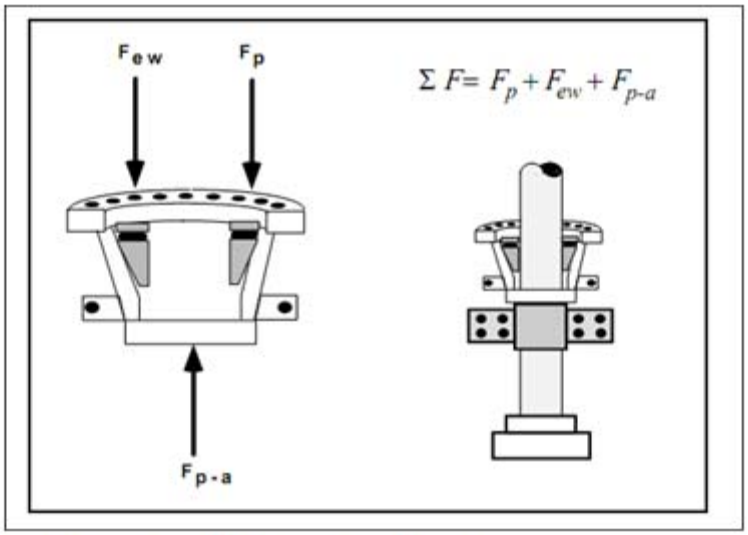

Note that the net upward forces are transferred to the casing slips.

These forces should not be allowed to exceed 80% of the casing tensile strength. Since the casing slips are incapable of imparting a downward force, all net downward forces are transferred to the casing via the casing clamp. Maximum unsupported buckling length calculations should be made to evaluate the possibility of failure.

If the forces associated with the worst case scenarios exceed 50% of the maximum tensile stress, bi-axial (axial and hoop stresses) calculations should be performed to evaluate the safety of the rig up.

CAPPING BY SWALLOWING THE STUB

Capping by swallowing the stub is an alternative when the entire wellhead has been removed. This procedure can also be used for capping drill pipe or tubing.

The typical capping assembly for this procedure (see Figure B.11) is a BOP stack. The stack is dressed out with (bottom to top):

- Slip rams.
- Inverted pipe rams
- Drilling spool with one ach manual and hydraulic valve on each outlet.
- Blind rams.

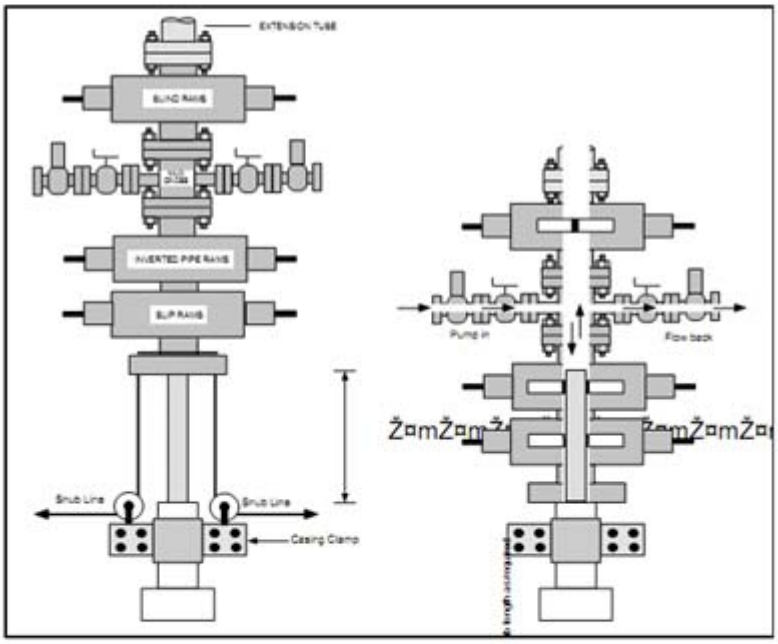

20333 State Highway 249, Suite 200
Houston, TX 77070 USA
Tel: +1-281-378-1523 | Fax: +1-281-370-6504
www.unitedsafety.net

Unlike pipe and blind rams, slip rams are not pressure sealing devices. They provide a mechanical grip only which is used to fix the BOP to the casing stub. The

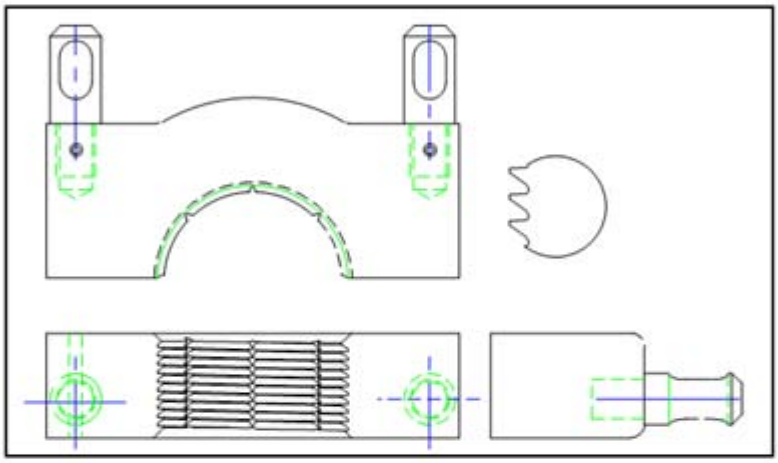

Slip Ram Inserts (Courtesy of Blowout Tools, Inc., Lafayette, LA)

outer casing stub. This clamp is then used to connect the snatch blocks and the snub lines. The BOP stack is lifted with the crane and controlled with the snub and tag lines while being placed over the casing stub. With the BOP assembly safely over the casing stub, the hydraulic lines are connected from the closing unit. The rams are closed in the following sequence:

- Slip rams – to fix the BOP stack onto the casing stub. Note that the BOP must be laterally supported to prevent casing damage from bending forces.
- Inverted pipe rams – to contain the pressure exerted from the top.
- Blind rams – to shut off the flow or direct the flow through the side outlet valves for diverting.

The BOP stack can be stabilized with hydraulic jacks and casing clamps if further rig up is required such as snubbing or coiled tubing equipment.

18.3 Spin on Technique

Spinning a valve of BOP into a flow is a viable option for capping of a flow. The procedure is simple and has been in use since the 1930's. Very large flows can be handled this way in a safe and efficient manner. One feature is that this can be done and requires no special materials or fabrication. Valves and BOPs can be removed as well as installed using this method. As in any capping operation, the potential for ignition cannot be eliminated so firewater protection for the capping crews must be maintained during this and all capping maneuvers. One drawback is the close proximity of the capping crew to the flow. This aspect must be carefully evaluated. The procedures for installation to an existing flange are as follows:

- Install a hinge bolt (one longer bolt flange).
- Install a lever arm to the capping assembly and sling the assembly for lifting.
- Lift and position the capping assembly onto the hinge bolt at 180 degrees.
- Position crane hook at centerline of the flow/flange to be capped.
- Cover the work area with fire water.
- Manually spin the valve into the flow and align capping and mating flanges.
- Drop in bolts and torque up to effect seal.

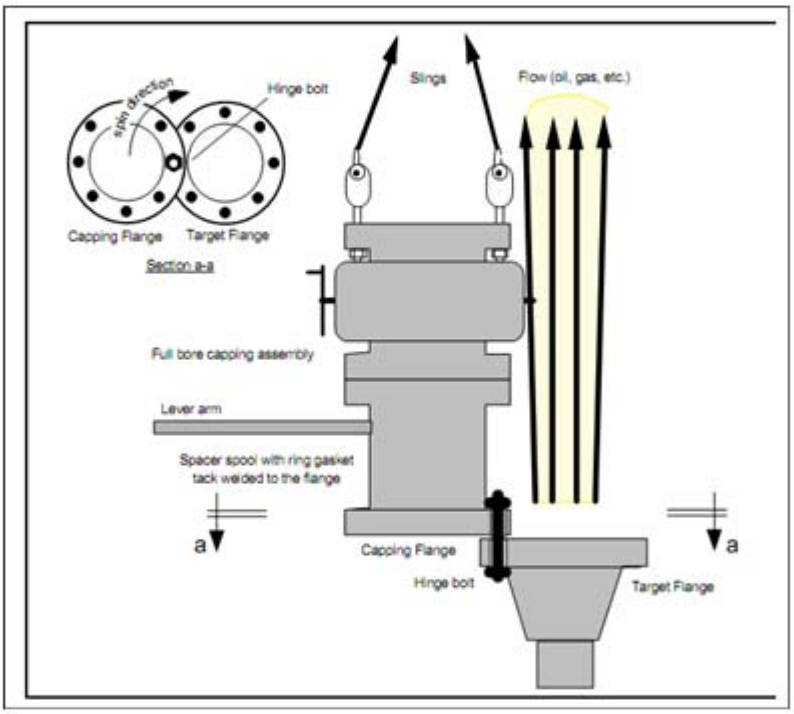

20333 State Highway 249, Suite 200
Houston, TX 77070 USA
Tel: +1-281-378-1523 | Fax: +1-281-370-6504
www.unitedsafety.net

Spin-on Technique

The forces imparted on the capping assembly as it is brought into the flow stream can be substantial. A conservative approach is usually taken with regard to the size of the cables used for the snub lines. However, it is sometimes useful to eliminate the magnitude of the forces to be encountered. This is done by calculating the momentum flux through a control volume surface which is taken to be the area of the flow stream. This provides a conservative margin since only part of the flow should actually impact onto the capping assembly.

The momentum force for liquid and gaseous flows (for sonic flow conditions) can be calculated after Craft2 from the following:

Equation B.1

where:

Fmg = momentum force of gas, lb force
S = gas specific gravity (Air = 1.0, natural gas use 0.6 to 0.7)
Qg = volume rate of gas flow, scf/day
Z = average gas compressibility factor
Dc = diameter of flow (casing ID), inches

Equation B.2

where:

Fml = momentum force of the liquid, lbs force
r = fluid density, lbm/gal
Q = liquid flow rate, bbl/min
Dc = diameter of flow (casing ID), inches

EXAMPLE B.2

Given:

A gas flow rate = 50,000,000 scf/day (used to yield conservative result). Casing size = 5 1/2-in. O.D., 5.0-in. I.D.
Gas specific gravity = 0.7
Z factor = 0.95
Associated liquid of 28,000 bbls/day of 9.3 ppg salt water

Determine: the momentum force First,

calculate gas momentum:

Second, calculate liquid momentum:

The total force possible will be 4296.5 + 52.5 = 4349 lbf or say 4500 lbf.

Therefore the cables or boom must be able to withstand a live load force of about 4500 lbf. If a cable system is to be used a minimum safety factor of 4 should be used (4.0 is the preferred design safety factor recommended for this very critical component). Thus the design load will be 4 x 4500 or 18,000 lbs force.

18.4 Stinging to Kill

The stinging operation is a technique that can be used to kill a blowing well while it is on fire or simply blowing provided certain well conditions prevail. Stinging to kill the well is the placement of a "stinger" in the throat of a blowing well in such a way that it functions as a temporary valve. The stinger has a hollow bore that will enable a kill fluid to be pumped into the well by bullheading. It may be the most expedient means to control the well provided wellhead and downhole conditions are favorable. Some means of placing the stinger at the wellhead will have to be fabricated based on the conditions of the well and structure. The conditions necessary for a successful stinging operation are:

- Shut in wellhead pressure will be less than 1000 psi.
- Cross sectional flow area must also be fairly small (max 6.5" ID).
- There is an unobstructed access to the flow area.
- Ovality of the flow area must be less than 5%.
- Downhole conditions are conducive or a bullhead kill.
- Pressure area effect must be less than 30,000 lbs. force.

If the SIWHP is greater than 1000 psi it may be difficult to create a seal with bridging agents. Common bridging agents are hard rubber, gel, barite, nylon rope or other lost circulation material. These are mixed as a slurry and pumped ahead in a pill. They should be graded in size from 2mm up to 20 mm (1/16" to ¾"). Strips of rubber from tire inner tubes is an excellent bridging agent for stinging operations. However, almost any type of lost circulation material will suffice. If the shut in

pressure will produce more than 16 metric tons (35,200 lbs) of upward thrust from the pressure area effect, it may not be possible to provide rigging or tie downs that will prevent pump ut (ejection) of the stinger or failure of the seal. To form a seal between the stinger and the inside bore of the well the ovality of the well must be less than 5%. This means that the gap between the stinger (which is assumed to e 99% round) is less than 5 mm (3/16 inch). If this gap is small the bridging agents can seal the leak.

20333 State Highway 249, Suite 200
Houston, TX 77070 USA
Tel: +1-281-378-1523 | Fax: +1-281-370-6504
www.unitedsafety.net

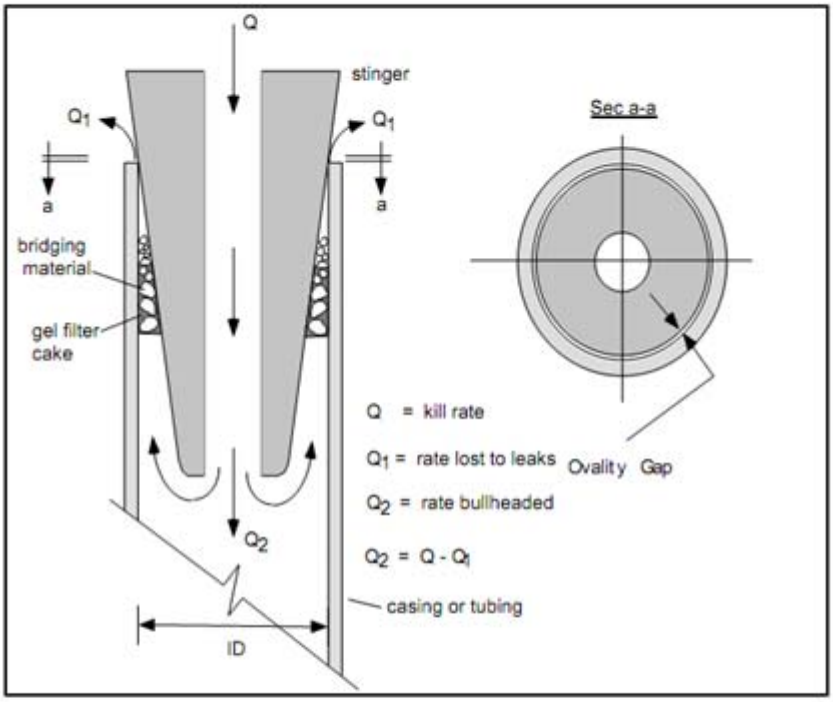

Stinger Diagram

Downhole conditions must be conducive for a bullhead kill for the stinging operation. Although a pump and bleed (volumetric kill) procedure will in theory be possible, the general idea is to sting in, pump the bridging agents to seal the leaks and then bullhead the well dead.

20333 State Highway 249, Suite 200
Houston, TX 77070 USA
Tel: +1-281-378-1523 | Fax: +1-281-370-6504
www.unitedsafety.net

Once the well is killed, the objective will be to secure the well. The stinger and its bridging agent seal cannot in any way be considered a permanent barrier. There are several options available:

Install a:

- Slip on weld type head (if productive string is weldable material).
- Temporary wellhead or
- Capping assembly (swallow stub) and/or permanent wellhead and re-tension casing strings.

18.5 Conclusions

In recent years there have been great advances in the techniques for capping and controlling blowouts. Equipment and techniques continue to improve due to cooperative efforts by both the capping vendors and the oil operators. This chapter has spoken to a few of the principles of the capping operation. There are many topics concerning capping that were not discussed here. We caution the reader that capping is an "experience intensive" activity and absolutely nothing can replace the sound judgment that has been gained from years of doing the job. Although procedures have been offered, they are in no way complete. They have not been given for the purpose of guiding the inexperienced to become a capping crew but for general information to aid all concerned with types of operations.

Capping operations depend greatly on the situation. However, the three major types of capping operations – capping to a flange, capping by installing a wellhead and capping to a casing stub – cover a vast majority of all well control jobs. Although typically regarded as a somewhat "unscientific" undertaking certain calculations can and should be made to insure that the end result will allow the subsequent operations to proceed safely.

Advances in explosive and abrasive cutting technology have resulted in improved methods for removing damaged equipment and preparing wellheads for capping operations. This technology should be used to its fullest extent to maximize the safety and efficiency of the capping job.

Stinging operations are applicable where certain conditions prevail. Where the circumstances will allow the use of the stinger technique, it should be considered

since it is a safe and effective means to control a blowing well.

19 Control and Kill Operations Modeling

Proper hydraulic modeling matches known downhole well data to a description of the flowpath, identifying possible interpretations and eliminating those that cannot exist. The need for further data collection will also be indicated. Usually, more data is available than is immediately obvious. Portable computers now can handle complicated simulators besides being used for presentations and plots of collected data. Hydraulic evaluations thus can be produced and analyzed onsite.

Even if data is limited, this exercise is useful since it can only improve understanding of the problem. For blowouts to surface, reasonable estimates of flow rate and type of liquid can be made by measuring size, height, width, color etc. of the plume. Exit conditions are indicated by direct observation of the wellhead area or via ROVs or minor excavation. Comparing well mechanical conditions with an estimate of formation productivity even allows simulation of wildcat blowouts. If more data can be gathered (pressure or temperature of flowing fluids etc.) scenarios can e further narrowed.

Steady state conditions exist for blowout simulations and vertical flow models used in production engineering may be used for modeling. For wells with high GOR or high water flows, it is important to use PVT and two phase flow correlations. Models also must be able to handle changes in flow path, follow regimes and friction correlations. Often, engineers familiar with the area where the blowout occurs can be used to manipulate the model. For complex projects, blowout specialists supplying special hydraulic models and simulators may be called on.

Blowout modeling can provide surprisingly accurate results. In producing fields, good data may be available and kill operations can be planned with confidence. On underground blowouts, annulus and pipe pressures, temperatures, downhole flow measurements etc. may be obtainable. These parameters then can be matched in a simulation improving the well kill operation.

Blowout simulations provide a range of possible kill simulations and resource planning. Better definition of blowout rates also help in defining pollution containment needs and possible diverter design for sales or flaring.

19.1 Kill Modeling

The main questions to be answered by well kill modeling are:

- Can the well be killed?
- What size of equipment, capacities and volumes of bulk material are needed?

These can then be evaluated in terms of:

- Logistics and mobilization times.
- Cost efficiency of alternative methods.
- Safety and risk analysis.

As a method is chosen and developed, detailed engineering can provide:

- Pumping schedules (rate, time, power).
- Kill fluid types and volumes.
- Pressure and temperature predictions.
- Monitoring program.

Hydraulic kill simulations are applicable to all blowouts. To describe the modeling procedure, dynamic kill modeling as applied to a relief well kill, or top kill through tubing or snubbing pipe, will be discussed.

Theoretical aspects of dynamic kills have been covered in writings by Blount and Soeiinahl, and others. They describe dynamic kill as a technique using flowing frictional pressure drop to supplement static pressure of the kill fluid being pumped up the annulus of the blowing well.

Water is often used in dynamic kills and is a good choice as an initial kill fluid if reservoir pressure is not far above hydrostatic. Water also is well adapted for evaluating communication and kill effectiveness or while waiting on mud supplies. Known proper ties make it easy to model and predict behavior of a kill operation. Dynamic kill principles are applicable to both heavy and lighter fluids.

The modeling process can be split into two phases:

- Establishing kill rates for different fluids and maximum pressure and power requirements.
- Defining an operational kill plan and schedule.

Establishing maximum rates etc. can be done with steady state calculations. By dynamic (time based) calculations are needed to obtain kill volumes. Manually stepping a steady state simulator may also provide volumes. However, they may not be accurate enough when required mud or specialty fluid volumes become large and logistics more critical.

When fluid weights and rates are determined and allowances made for losses, a dynamic kill can be simulated based on equipment limitations (maximum pump rate, pressure and power) and pressure monitoring. Often, it is necessary to also compute pressure downhole to prevent exceeding fracture pressure, tubular burst pressures etc.

Results can be presented as tables or plots showing flow and pump rates, pressures etc. vs. time or cumulative volume, as best suited for a particular kill. Fig. 9 shows pump rate and cumulative volume vs. time for an off-bottom intersection of a gas blowout with a relief well. Plots with different scenarios/options then can be used to monitor kill effectiveness and losses. Together with monitoring of BHP when possible, plots can also be used to pick the correct model when uncertainties exist.

19.2 Model Requirements

The model required for well control planning and operations will depend on circumstances and the stage of the operation. Often, hand calculations or solving empirical equations via spread sheets or similar calculation methods may be sufficient, especially if correlated with experience from similar situations. An overview of well pressures, flowing and static pressure gradients, and ratings of pipe and equipment may be all that is needed in the case of predictable operations such as capping production wells. Equipment, supplies, people etc. available on site may be insufficient and mobilization of more resources may be necessary. The ability to quickly assemble a logistical plan is important. Hydraulic modeling will define equipment needs by setting upper and lower limits on kill rates, pressures and volumes.

Often a well kill is described in terms of its main contributing element (dynamic kill, bullheading, volumetric kill, momentum kill, plugging etc.). Calculations then can be made using a model or equations designed for the particular purpose. Results can be used to obtain densities, rates, pressures, volumes, etc. need to regain static control of the well.

For example, maximum pressure transients to be expected when shutting in a well at surface will be the fluid gradient back to reservoir pressure. A PVT calculation with reservoir inflow modeling provides an upper limit to the answer. Such calculations can be performed by a reservoir engineer familiar with the area using software in daily use. This can be improved by dynamic calculations of pressures using a reservoir model with wellbore storage considerations, superimposing whatever fluid is pumped into the well etc.

Estimating an upper limit for the required rate for dynamic kill calculations can be made using published formulas or spreadsheet calculations for steady state flow, particularly if water is the kill fluid. As complexity or accuracy requirements increase, completeness of the modeling process becomes more critical.

Modeling requirements also become more demanding when equipment and supplies will not fit in the space available, or if more pumps or more fluid is needed than is available, or if pressure ratings at surface or downhole are exceeded temporarily. It may then be necessary to tune weight, viscosity, pumping pressure etc. against each other and against time, indicating a dedicated dynamic well kill model will be required. This model should include all physical processes included in the control operation, such as fluid properties, friction, flow characteristics, interaction with changes in reservoir inflow behavior etc. Dynamic means time-based so pressure, flow and pump rate characteristics can change vs. time.

Importance of time based models or simulators become obvious when considering, for example, buildup behavior when shutting in a well. For most reservoirs, BHP will be sharply drawn down during a blowout and the initial buildup period can be used to pump kill fluid more efficiently than after pressure has increased. This effect will be the same in any kill operations.

Similarly, physical processes involved (friction, momentum, weight etc.) all contribute to the kill process so that kill requirements will be lower if all effects are considered together rather than one at a time.

20333 State Highway 249, Suite 200
Houston, TX 77070 USA
Tel: +1-281-378-1523 | Fax: +1-281-370-6504
www.unitedsafety.net

Even the most sophisticated model will not work if input parameters are incorrect or if the wrong options are chosen in actual calculations. Experience in such work is required as well as a good quality control system including verification by engineers from several disciplines.

All models have limitations because experimental data may not exist to verify them for extreme conditions. Examples of modeling discrepancies are pressure losses for high rates through tubulars of non-Newtonian fluids such as muds. Models exist for these conditions but they may not be applicable over the range found in well kill operations. Published equations taken out of context can end up being used outside of their applicable range if proper care is not exercised.

19.3 Inputs and Data Acquisition

Traditional use of well hydraulic modeling is in the area of production well design and optimization, where accurate reservoir, fluid, pressure, temperature and flow characteristics are available. One might assume that modeling is difficult for a wildcat blowout, where minimal data is available. However, even limited data may provide enough information to start defining equipment requirements.

Useful pressure and temperature data in this context can be obtained if access to the wellhead is available. Then, blowout flow path and rates can be determined. For example, fluid flowing up tubing or drill pipe in a blowing well will have a different temperature from fluid flowing up the annulus for a given surface rate and pressure. If fluid composition can be determined, an accurate analysis can be made especially for light fluids.

Reservoir pressure is an important parameter in these calculations, especially in wildcat blowouts. However, mudlog data can be used to analyze inflow behavior, pressure, depth and type of fluid.

Kicks that develop into blowout often occur when work is focused on other operations such as workovers etc. A pressure buildup that has gone unnoticed for some time may be reported as instantaneous even though pit level, circulation rate and pressure data show it occurred over several minutes or hours. That results in a different inflow evaluation with corresponding decreases in required kill rates.

Pressure, temperature and other production logging techniques provide data

useful for modeling underground blowouts. Model results show a flow path scenario derived from production logging after a prolonged snubbing effort and mechanical data. Coupled with dynamic kill modeling, relief well kill requirements were determined and a good match was made between predicted and actual kill rates.

Use in Well Planning

Two categories of blowout contingency plans require hydraulic analysis:

- Well design, especially with respect to casing programs.
- Contingency planning for blowout control.

Basic well design is adequately covered in the literature. Special applications may require kick analysis and evaluation of killing an underground flow from the rig. This assessment is becoming more critical as operators try to cut costs by eliminating a casing string. Blowout contingency planning is needed for critical wells and structures to check on feasibility of killing wells and resources needed, especially for remote areas.

Well design may also be affected when drilling program changes reduce risk of a kick developing into a blowout.

Post analysis of kick handling is important to see if transient dynamic pressures or forces temporarily exceed pipe pressure ratings or shoe strengths, in spite of static calculations indicating system integrity. This analysis can also help in determining if data used in the initial analysis was correctly interpreted.

20 Surface Control Special Services

20.1 Hot Tapping and Valve Drilling

Hot tapping and valve drilling equipment has been used on blowouts to allow pumping into wellheads, tubulars or frozen valves. This equipment is available from most major blowout specialist companies as part of their service capabilities.

In a hot tap, a saddle clamp is installed around the tubular and a pack off is

energized. Within the lubricator a drill bit cuts through the tubular with pressure held slightly higher on the outside than on the inside so positive indication that a hole has been made is seen. After the hole is cut, it can be reamed out up to 1". Valve drilling machines are available to drill out frozen gates. Up to 3" holes have been drilled with larger hole sizes milled out.

These services are available from Boot & Coots, Cudd, Halliburton, HWC and others. Pipeline companies use hot tap equipment and may be adaptable to certain applications. Saddle clamp sizes should be investigated. A specialist should be utilized in any case for safety.

20.2 Freezing

Freezing is used to place an ice plug within shut in wells (within pipe, wellheads or annulus) to allow removal, repairs or replacement of wellhead equipment. Freezing has not been used to control a high volume blowing well.

Some inventors attempted to market devices using liquid nitrogen to freeze off blowing wells in Kuwait, but simpler control methods were available. Difficulties were seen in maintaining the freeze plug of frozen oil and brine while making extensive surface repairs to blown up wellhead equipment.

Freezing techniques usually use dry ice to freeze water or fresh water-bentonite slurries. Methanol can be used with dry ice to get a lower temperature. A 75% methanol/water mixture has a freeze temperature of <-200° F. Methanol water mixtures could be potentially cooled by liquid nitrogen and the cold methanol/water mixture circulated around the area to be frozen.

This would allow control of the applied temperature to the steel. Problems with low fracture toughness in super cooled steels have been observed in nitrogen pumping service when pump rates exceeded heater capabilities and liquid nitrogen was pumped into wells.

Freezing services are available from Boots & Coots, Cudd, Halliburton, HWC and others.

20.3 Pneumatic Casing Cutters

Pneumatic cold cutters are used to strip away outer casing strings to expose inner casing strings for well capping. ABB Vetco Gray has equipment available to make vertical stripping cuts to split casing strings. The pneumatic cold cutters are commonly used in the pipeline business. Common sources are ABB Vetco Gray, Boots & Coots, Enterra Wellcat, Porta-lathe and others.

20.4 Abrasive Jet Cutters

The Halliburton abrasive jet cutter was developed to deal with the aftermath of the Persian Gulf War. Because of the extensive number of wells that were burning, Halliburton developed a way to rig up quickly, cut from a remote location and rig down quickly to move to another well. This cutter was designed to cut the casing below the braden head, which cuts all the casing strings, cement between casing strings and tubing in the center.

The abrasive jet cutter incorporates two jet nozzles opposing each other. A hydraulic motor turns a linear screw that moves the nozzles either in a forward or reverse direction. The cutter is positioned on each side of the wellhead and pressure from the pumping equipment is established at 10,000 psi at approximately 4 bbl/min. Sand is added to the blender and the sand slurry is delivered to each nozzle. The nozzles are then tracked forward cutting everything between the two nozzles.

All hydraulic lines are encased in a water jacket due to the intense radiant heat associated with a blowout. Also as an added feature the cutter can be rotated clockwise to counter-clockwise and raised up or down. This simplifies trying to cut on a leaning or damaged wellhead. The abrasive jet cutter is attached to the end of an Athey Wagon and is controlled by a small hydraulic power pack that is incorporated into the skid that houses the cutter during shipping. This power pack and control system can be placed up to 250 feet from the actual cutter assembly. From this safe distance the well control specialist can control the movement of the cutting jets.

The abrasive jet cutter has cut a forty eight inch diameter flange the largest to date. The average cut usually made with the cutter is between twenty four inches to eighteen inches in diameter. With a cutting pressure of 10,000 psi, a pump rate of four

barrels per minute and a pound per gallon sand concentration the cutting time is less than one hour for these applications.

20.5 Requirements for the Halliburton Abrasive Jet Cutter

- Two thousand hydraulic horsepower (2,000 hhp) – that has been horsepower tested for at least twenty minutes at 10,000 psi and 4 bbls/min. If 2,000 hhp is not available, contact Halliburton Well Control in Duncan.
- Pumping iron – This depends on each individual blowout location. Usually five hundred feet of straight two inch 1502 with an assortment of style 50 ingle wing chiksans and tees to wye the pumping equipment together. Five steel hoses are required to connect straight iron to the Athey Wagon. Suction hoses to hook up pumps.
- Sand Requirements – 20/40 Ottawa frac sand is preferred but 20/40 Brady, 20/40 inter-prop or 20/40 bauxite can be used if the Ottawa is not available. Amount per hour of cutting = 12,500 pounds.

Halliburton Well Control will supply the blender and in most cases a centrifugal pump to mix the sand and water together.

20.6 Explosive Jet Cutter

Shaped charges can be made in the field using raw C4 plastic explosive in fabricated holders. Point cuts, linear cuts and circular cuts can be fabricated by firefighting explosive experts. Manufactured cutting charges are stocked by explosive manufacturers in some regions, but cannot be custom configured to the application. These are generally the same companies that make oil well perforating charges (GOEX and JRC).

20.7 Hydraulic Simulator

Hydraulic modeling software and specialists will be required to help perform blowout scenario diagnostics and kill simulations.

Planning the kill strategy for a 1989 underground blowout in the North Sea required development of an improved flow simulator. The hydraulic kill simulator was based on the industry standard, two phase pipe flow model, OLGA. After the project, the planning team realized that they gained considerable advantage from using a transient two phase flow simulator for comparing various kill scenarios. Since then, the OLGA-WELL-KILL simulator has been used successfully for a number of intervention design plans.

The ability to analyze hydraulic kill scenarios quickly and find their effect on the rest of the intervention operation is critical to project success. A specialized need was therefore identified for a multiphase, time transient, flow simulator designed for easy blowout kill analysis. This need was the driver that motivated the continued modification of the pipeline code for well flow and kill simulations.

During a blowout kill, up to six fluids can be present simultaneously in the well reservoir; oil, gas and water; kill water, intermediate and final kill mud. Conventional kill models cannot easily evaluate multiphase flow where heavy kill muds are used.

Simulations handle this by first simulating the dynamics of a liquid/gas biphasic flow regime, then comparing this to a simulation using averaged properties in a light weight liquid phase. The kill phase is then introduced and a dynamic two phase simulation is performed until a steady state condition is reached. Afterwards, the next phase can be introduced and the simulations can be restarted at any time.

Modeling is accomplished using a number of controllers set to contain the simulation within the physical constraint of the real blowout. The controllers can, for example, be set on the following parameters:

- Pump rate.
- Pump horsepower.
- Formation collapse pressure.
- Casing burst pressure.
- Surface injection pressure.
- Bottom hole pressure (min/max).
- The simulation modeling includes
    - Pump performance
    - Non-Newtonian fluid flow (for mud)
    - Fluid temperature and pressure response
    - Inflow modeling (multiple if needed)

20333 State Highway 249, Suite 200
Houston, TX 77070 USA
Tel: +1-281-378-1523 | Fax: +1-281-370-6504
www.unitedsafety.net

- Leaks (multiple if needed)
- Back pressure (outflow conditions)
- Several reservoir inflow models
- Variable reservoir pressure
- Path chokes (critical and sub critical)

In practical use, the modeling is usually taken through a number of steps starting with a PVT fluid characterization of the reservoir fluids. The blowout is then modeled to match all available data.

The next step is to set up a constant rate kill simulation to work out the range for the simulation of the actual dynamic kill. This is also useful in evaluating allowance for losses between wells (for relief well kills) as well as for the kill fluid density, and for velocity and pressures at critical points in the blowout path. The fully dynamic simulations can then incorporate all the actual constraints in the kill such as casing pressure ratings, fracture pressures, inflow performance and reservoir pressure (dynamically versus time, if necessary), pumping plant and mud properties.

The simulation yields an actual pump schedule vs. time (with rates and pressures at any chosen point in the flow path). If needed, a number of sensitivities can be developed to evaluate kill effectiveness during the actual pumping. This later step can often prove useful when there are unknowns in the kill (such as communication between relief well and blowout well, actual blowout flow path or reservoir performance.)

Applications include the following:

- Kill with different mud densities in the well.
- Partial losses during kill.
- Multiple blowout paths, cross flows and leaks.
- Multiple relief wells pumping at different rates.
- Underground blowouts from a drilling rig.
- Simultaneous bullheading and dynamic kill.
- Off bottom or momentum kills, shallow gas blowouts.
- Horizontal well flow analysis.
- Slugging in long reach production wells.
- Rates required to circulate out a kick in horizontal wells.
- Alternating gas and water injection.
- Sensitivity analysis by varying parameters.

20333 State Highway 249, Suite 200
Houston, TX 77070 USA
Tel: +1-281-378-1523 | Fax: +1-281-370-6504
www.unitedsafety.net

Annex: INCIDENT COMMAND SYSTEM DOCUMENT

21 Incident Command System

21.1 Introduction

In this Annex you will find a detailed description of a comprehensive Incident Command System (ICS). ADM may elect to not immediately use or implement certain positions. However, in future developments these positions may be adopted into the Plan.

The roles, responsibilities and checklist of the Incident Command System Team Members are presented in this document. These are basic guidelines that should be considered and used by the team members that will help organize and avoid chaos during an ADM incident. There are three (3) teams involved, these being the Tactical Response Team (TRT) (On Scene Team), the Incident Management Team (IMT) (Off Scene Team at the Emergency Crisis Room), and, if required, the Crisis Management Team (CMT) (Corporate Team).

For some Level 2 incidents and definitely for a Level 3 incident an On Scene Command Post will be setup at a safe distance. The distance of the On Scene Command Center will depend on the Noise, Toxic, Radiation and Explosive Hazards associated with the incident. This center will be used by the Incident Management Team to carry out their respective responsibilities with the Well Control specialist as required. The On Scene Command Center imperatively will need full scale communications equipment and desk top space for the appropriate work and tasks to be performed. Daily meetings will be held after each working tour to summarize relevant advances to the remedial

20333 State Highway 249, Suite 200
Houston, TX 77070 USA
Tel: +1-281-378-1523 | Fax: +1-281-370-6504
www.unitedsafety.net

effort and report these to the Incident Management Team members who will be working from an Off Scene Command Post known as the Emergency Crisis Room.

This Emergency Crisis Room for ADM will be located in the ADM's Decatur Plant. Basic responsibilities of all team members are described below:

21.1.1 ICS Interaction: Tactical Response, Incident Management Teams

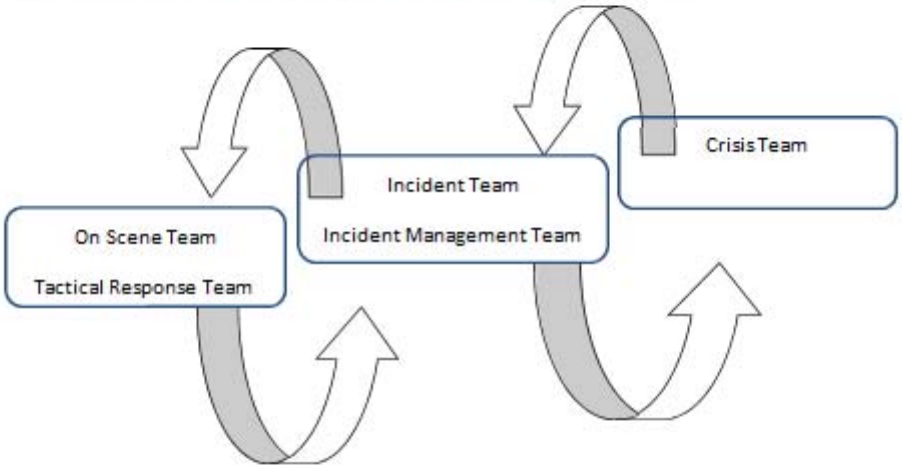

21.2 Tactical Response Team (TRT)

21.2.1 On Scene Tactical Response Team (TRT)

On Scene response members will make up the Tactical Response Team (TRT) and will operate from a base near and at a safe distance from the incident. This is typically known as the On Scene Command Post. The Communications with the Incident Management Team is vital and necessary for this post to function. Specialists and key ADM Team members from the Company may be required and used to relieve, if necessary, the members of the Tactical Response Team.

This is especially normal if the operations to remediate the incident will require many days, weeks or months. The **On Scene Commander** will be the Wells Field Superintendent and will be in charge of the TRT. The purpose of the TRT is to use all efforts and resources available to control and correct the incident on hand. Tactical Response Team (TRT) members for ADM may include the following:

- On Scene Commander
- Department Captain
- HSE Leader
- Engineering Team
- Communications Technician
- Logistics Coordinator
- Civil Works Equipment Contractor
- Well Control Specialist Team Leader (if required)

Depending on the specific situation, the members of this team may vary. The actual makeup of the team will ultimately be determined by the Incident Commander, the On Scene Commander and the Well Control Specialist Team Leader.

An area for an On Scene Command Post would be designated in a safe zone next to the Incident locations. It should not be a problem to locate an On Scene Command Post in the ADM facilities but contingent upon noise and toxic levels being within safe levels. It is imperative that the Command Post be of sufficient size to hold all of the personnel directly working on the front lines, and have all the modern communication equipment needed to communicate with the Offsite Crisis and Well Control Teams.

20333 State Highway 249, Suite 200
Houston, TX 77070 USA
Tel: +1-281-378-1523 | Fax: +1-281-370-6504
www.unitedsafety.net

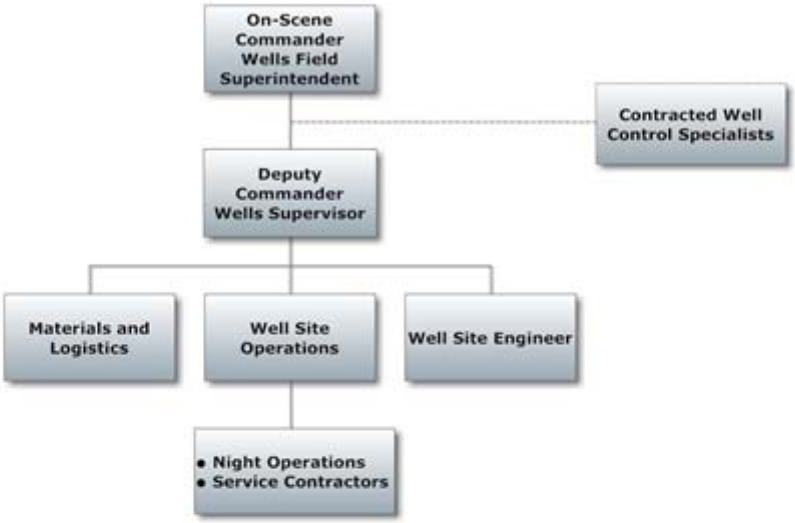

Figure 21-1 Tactical Response Team

21.3 On Scene Roles and Responsibilities (TRT)

21.3.1 On Scene Commander Role

Responsible for organizing and managing at-the-scene tactical response operations in a safe and effective fashion and for keeping the balance of the Incident Management Team (IMT) informed about the nature and status of the incident and incident management operations.

On Scene Commander Responsibilities:

- Wells Field Superintendent:
  - Report Incident
  - Assume On-Scene command
  - Alert other personnel in the area about the nature and location of the incident and if necessary, establish an isolation perimeter and evacuate non-responder personnel to a safe area outside the perimeter
  - Account for all personnel
  - If qualified, initiate defensive and/or offensive response actions consistent with: level of expertise and training; knowledge of problem(s); and understandings of hazards
- Receive incident report.
- Activate appropriate members of TRT.
- Assume on-scene command; establish Tactical Command Post (TCP).
- Ensure own safety and that of fellow responders; work closely with Site.
- Safety Officer.
- Determine type and level of security needed to maintain Isolation. Perimeter; if necessary, establish Security Task.
- Identify optimum location for each staging area;
- Communicate information on location to Staging Area Manager.
- "Size Up" situation to identify problem(s) to be addressed by tactical response personnel.
- Develop solution(s) to problem(s) (i.e. strategy) and break down work that needs to be done to implement strategy down to manageable tasks.
- Assign task to Task Leaders and allocate check-in resources to tasks.
- Prioritize task as necessary.
- Establish and maintain a clearly defined tactical response organization.
- Establish appropriate communication network(s);
- Define a communication protocol for each network.
- Take all appropriate and safe actions to:
  - Control the source(s) of problem(s)
  - Limit the spread of emitted materials and their impacts
  - Protect sensitive environmental, social and economic resources
  - Clean, remediate, repair resources impacted by spilled or emitted materials and/or tactical response operations

20333 State Highway 249, Suite 200
Houston, TX 77070 USA
Tel: +1-281-378-1523 | Fax: +1-281-370-6504
www.unitedsafety.net

- Address span-of-control problems.
- Manage resources; keep track of resource status.
- Delegate responsibilities to Aides(s).
- If IMT is activated, communicate with Wells Team Leader via Command.
- Network.
- Compile and maintain appropriate documentation.

On Scene Commander Checklist

Site Control

- Locate TCP
- Locate Staging area(s)
- Define boundary of isolation zone (i.e. Isolation Perimeter)
- Secure isolation zone
- Evacuate isolation zone, as necessary
- Institute resource check in

Site Safety

- Account for personnel
- Receive safety briefing from Site Safety Officer
    - Hazards present
    - Location of hazard control zones
    - Level of PPE required
    - Decontamination requirements; location of warm zone
    - Emergency medical procedures

Site Management

- "Size Up" situation to identify problem(s)
- Develop solutions(s) to problem(s) (i.e., strategy) that addresses the following areas of concern:
    - Protection of people
    - Protection of environment
    - Protection of property
    - Control of source
- Identify tasks that must be performed to implement strategy
- Assign task to Task leaders
- Assign "available" resources to tasks; prioritize tasks, as necessary

- Brief each Task Leader on:
  - Nature and location of task and its relationship to strategy
  - Safety Considerations
  - Communication procedures, including chain-of-command
- Provide Staging Area Manager information on un-met resource needs
- Monitor tactical response operations
- Receive safety status reports from Site Safety Officer

Communications

- Work direct reports (i.e. Task Leaders, Division Supervision and Branch Directors) to establish and maintain tactical network and tactical network communications protocol.
  - Who talks to whom
  - About what
  - When and how
- Work with Senior Well Engineer to establish and maintain command network and command network communications protocol.
  - Who talks to whom
  - About what
  - When and how
- Designate Aide(s) responsible for compiling field reports and/or for setting up and maintaining communication equipment, and/or for providing assistance on technical matters.
- Answer questions raised by Aide(s) responsible for compiling Field Reports.
- Receive schedule of IMT Assessment Meetings from Wells Team Leader; provide schedule to Aide(s).
- Provide Wells Team Leader Field Reports approximately 30-45 minutes before IMT Assessment meetings; ensure reports provide current information on locations of incident facilities, including:
  - Tactical Command Post
  - Staging Area(s)
  - Decon Station(s)
  - First aid station(s)
  - Security check point(s)
  - Nature, location and characteristics of spilled/emitted material(s)
  - On-scene weather
  - Tactical response organization down to task level
  - Strategy
  - Nature and status of tasks broken down by Branch and/or Division

- "Assign" resources broken down by staging area
- Progress being made
- Problems being encountered
- Needs

On Scene Commander Incident Specific Responsibilities:

Missing Personnel

- Determine number of missing personnel.
- Determine, if possible, "last seen" status.
- Clearly define search area(s).
- Work with Site Safety Officer to characterize hazards in search area(s).
- Determine whether it is safe to initiate a Search and Rescue (SAR) task(s) within search area(s).
- If safe, assign SAR Task Leader(s) and tactical resources to assist Leaders(s) in carrying out SAR operations.
- Work with SAR Task Leaders(s) to develop a SAR plan.
- Monitor implementation of SAR plan.

Injured Personnel

- Determine number of injured personnel.
- Determine nature and severity of injuries.
- Determine whether it is safe to initiate a medical task.
- If safe, assign Medical Task Leader and tactical response resources to assist Task Leader in carrying out medical operations.
- Work with Medical Task Leader and/or Site Safety Officer to triage injured personnel, it necessary.
- Determine need for Medevac Task; work with Staging Area Manager to obtain air water, and/or land ambulance capability.
- If safe, assign Medevac Task Leader and tactical response resources to assist Task Leader in carrying out medical operations.
- Work with Medical Task Leader and/or Site Safety Officer to triage injured personnel, if necessary.
- Determine need for Medevac Task; work with Staging Area Manager to obtain air, water, and/or land ambulance capability.
- If safe, assign Medevac Task Leader and tactical response resources to assist Task Leader in carrying out Medevac operations.
- Request activation of all required medical facilities.

Material Spill

- Determine nature and status (i.e. controlled or uncontrolled) of source.
- Determine the nature of the release (i.e. batch or continuing) and nature and quality of spilled material.
- Determine whether spilled material is on land and/or in water; is contained or uncontained.
- Determine location of sensitive resource area(s) and threat spilled material poses to area(s).
- Decide how to track spilled material; if necessary, initiate Surveillance Task.
- Decide whether containment boom and/or heavy equipment can be used to contain spilled material and/or to divert spilled material to a recovery or treatment site, and/or to divert spilled material away from a protected site; initiate Mechanical Containment Task.
- Determine how contained spilled material is to be recovered; initiate Mechanical Recovery Task.
- Determine how impacted areas are to be cleaned; initiate Mechanical Cleanup Task.

21.3.2 Deputy On Scene Commander Role

Responsible for assisting On Scene Commander, particularly in regards to keeping track of checked-in resources, compiling information for Field Reports, and compiling and maintaining appropriate documentation.

Deputy On Scene Commander Responsibilities:

- Travel to incident scene; check in at Tactical Command Post (TCP); report to On Scene Commander
- Assist On Scene Commander in keeping track of staged resources; if necessary, establish direct line of communications with Staging Area Manager
- Assist On Scene Commander in keeping track of resources assigned to carry out tasks
- Compile information for/prepare written Field Reports; obtain On Scene Commander approval of reports
- Assist On Scene Commander in monitoring Command Network
- Provide information to assist in development of Incident Action Plans
- Assist On Scene Commander in compiling and maintaining appropriate documentation.

Deputy On Scene Commander Checklist

Site Control

- Receive reports on "available" resources for Staging Area Manager.
- Keep On Scene Commander informed about "available" resources.
- Compile site control-related information for Field Reports, including:
  - Location of TCP
  - Location of staging area(s)
  - Location of Isolation Perimeter
  - Names of all essential personnel and members of the Tactical Response Team
  - "Available" resources in staging area(s)

Site Safety

- Receive information from Site Safety Officer.
- Compile site safety-related information for Field Reports, including:
  - Hazards
  - Hazard control zones
  - PPE requirements
  - First aid stations

Site Management

- Receive work assignments from On Scene Commander.
- Obtain information needed for Field Reports from discussions with On Scene Commander and by monitoring the Tactical and Supply Networks.

Communications

- Receive schedule of IMT Assessment Meetings from On Scene Commander.
- Work with On Scene Commander to compile information needed for Field Reports (see list, consider reporting on Site Control, Site Safety and Site Safety Management).
- Provide On Scene Commander information needed for Field Reports before IMT Assessment Meetings.
- Utilize Command Network to forward Field Reports to Senior Well Engineer.

20333 State Highway 249, Suite 200
Houston, TX 77070 USA
Tel: +1-281-378-1523 | Fax: +1-281-370-6504
www.unitedsafety.net

21.3.3 Site Safety Officer Role

Responsible for ensuring that all appropriate actions are taken to protect the health and safety of the On Scene Tactical Response personnel.

Site Safety Officer Responsibilities:

- Travel to Incident scene; check in at Tactical Command Post (TCP); report to On Scene Commander.
- If necessary, assist On Scene Commander in determining safe approach guidelines.
- If necessary, assist On Scene Commander in defining Isolation Perimeter and in determining need to evacuate non-responders from Isolation Zone.
- Receive guidance from On Scene Commander on problem(s) to be addressed, solution(s) to problem(s) and task(s) to be performed.
- Work with On Scene Commander to institute personnel accountability system at incident scene.
- Characterize hazards in area(s) where task(s) are to be carried out before task(s) is/are initiated.
- If necessary, organize and manage a Site Entry Task to carry out on-site characterization.
- Ensure Site Entry Team is adequately staffed (i.e. "buddy" and backup), is equipped and briefed.
- Monitor work of Site Entry Team.
- Define hazard control zones. If necessary, ensure all incident responders are aware of location of all hot and warm zones.
- Ensure all incident responders who enter a hot zone are adequately equipped, trained and briefed (i.e. tailgate safety briefing).
- Determine level of PPE to be worn in each hot and warm zone.
- Determine level of decontamination to be carried out in warm zone.
- Work with On Scene Commander to develop emergency medical procedures.
- Evaluate need for first aid at incident scene and establish first aid station(s).
- Monitor incident response operations and order immediate cessation of any unsafe task or work practice.
- If incident response operations are broken down into Branches and/or Divisions, determine need for a Site Safety Officer(s) at Branch and/or Division Level(s).
- If there are any fatalities or injuries during conduct of incident response operations, participate in all related investigations and then issue Safety Bulletin(s).

- Advise Staging Area Manager regarding food, water, shelter and sanitary requirements for tactical responders.
- Compile and maintain appropriate documentation.

Site Safety Officer Checklist

Site Safety Officer Responsibilities:

- Check in at TCP.
- Report to On Scene Commander and receive briefing on situation.

Site Safety

- Characterize chemical and physical hazards.
- Define boundaries of hazard control zones.
- Define PPE requirements.
- Define decontamination requirements.
- Identify location(s) of first aid station(s).
- Provide safety briefing to On Scene Commander:
    - Hazards present
    - Hazard control zones
    - PPE
    - Decontamination requirements

Site Management

- Brief Task Leaders on:
    - Hazards present
    - Location of hazard control zones
    - PPE requirements
    - Emergency medical procedures
    - Monitor incident response operations and order immediate cessation of unsafe practices.
    - Provide safety status reports to On Scene Commander.
      Communications

With concurrence from On Scene Commander, utilize the Command Network to provide the Incident Management Team (IMT) Safety Officer with Safety Status Reports approximately 30-45 minutes before IMT Assessment Meetings. Reports cover:

- Status of personnel (i.e. missing, injured, fatality) and, if underway, any safety-related tasks.
- Location(s) of hazard control zones (i.e. hot, warm, cold).
- Nature of hazards (chemical, physical, operational) broken down by hot zone.
- PPE requirements broken down by hot and warm zone.
- Location of first aid station(s).
- Emergency medical capabilities.
- Receive feedback from IMT Safety Officer on:
    - Status of IMT effort to address requests for assistance, particularly in regard to preparation of a written Site Safety Plan.
    - Problems and solutions raised during IMT Assessment Meetings that have a bearing on site safety.

Site Safety Officer Incident Specific Responsibilities:

Injured Personnel

- Work with the Medical Task Leader to triage injured personnel, if necessary.
- Work with On Scene Commander to determine the need for Medevac.
- Work with the Medevac "Task Leader to coordinate and/or carry out Medevac operations.
- Obtain Medical Task Leader input into Emergency Medical Plan.

21.3.4 Logistics and/or Staging Area Manager Role

Responsible for establishing and maintaining a staging area and for coordinating the delivery of support services from a staging area which included the following: food, water, shelter, PPE and sanitation services for the at-the-scene incident management personnel, fuel, water and lubricants for response equipment.

Logistics and/or Staging Area Manager Responsibilities:

- Travel to the incident scene and check in at the Tactical Command Post (TCP) and report to the On Scene Commander.
- Work with the On Scene Commander to identify the optimum location to stage resources.
- If the On Scene Commander determines a need for multiple staging areas, arrange for the establishment of the staging areas, appoint a Manager for each area and establish a direct line of communications with each Manager.
- For each staging area:
  - Identify exact location.
  - If possible, define and secure boundaries of area.
  - Identify ingress and egress points. If possible, post sign to control traffic flow into and out of area.
  - Identify and obtain personnel and equipment needed to operate area.
  - Segregate resources, by kind, in area.
- Institute resource check-in/check-out procedures.
- Establish a direct line of communications with On Scene Commander.
- Keep On Scene Commander informed about kind and quantity of resources in each area.
- If Incident Management Team (IMT) is activated, work with IMT Logistics Section.
- Chief/Communications Unit Leader to establish a Supply Network.
- Receive and process resource requests generated by incident management personnel.
- Forward resource requests that cannot be addressed with staged resources to the IMT Logistics Section Chief/Supply Unit Leader via Supply Network.
- Receive follow-up reports from IMT Logistics Section Chief/Supply Unit Leader on status of the Section's efforts to obtain requested resources.
- Provide On Scene Commander or Aide status reports on resources checked in and available in each staging area and resources that are en route to each staging area.
- Receive guidance from Site Safety Officer, obtain, and make available the food, water, shelter and sanitary facilities necessary to support incident responders.
- Supervise demobilization of each staging area.
- Compile and maintain appropriate documentation.

20333 State Highway 249, Suite 200
Houston, TX 77070 USA
Tel: +1-281-378-1523 | Fax: +1-281-370-6504
www.unitedsafety.net

Logistics and/or Staging Area Manager Checklist

Site Control

- Set up and maintain staging area(s).
- Institute resource check-in procedures.
- Provide information on "available" (i.e. staged) resources to On Scene Commander, either directly or through an Aide.

Site Safety

- Maintain first aid station(s) if located in staging area(s).

Site Management

- Receive resource requests from On Scene Commander and/or other members of the tactical response organization.
- Dispatch staged resources to locations specified by On Scene Commander.
- Establish/utilize Supply Network to transmit information on un-met resource needs to IMT Logistics Section Chief/Supply Unit Leader.

Communications

- Forward information on checked-in resources to On Scene Commander.
- Work with Logistics Section Chief/Communications Unit Leader to establish and maintain
- Supply Network.
- Order equipment, personnel, materials and supplies over Supply Network.

21.3.5 Well site Engineering Role

There will not be a well site engineer permanently on site in Decatur. This task will be performed by a suitable Schlumberger Carbon Sequestration field person.

The role for this position will correspond to those employees occupying any of the engineering or operational positions on location. This position should provide technical support to the On Scene Commander. Also, these positions will be responsible for updating information on the nature and status of the response operation and assist the On Scene Commander on a variety of tasks.

Wellsite Engineering Responsibilities:

- Provide Unit with technical information as needed and supply needs.
- Identify engineering problems and solutions and break work down into manageable tasks.
- Assign tasks to appropriate personnel and maintain proper span-of-control.
- Assume responsibility for tasks delegated by the On Scene Commander.
- Assist On Scene Commander in the analysis of incident potential and the preparation of Strategic Objectives and response priorities.
- Address strategic objectives and response priorities as they relate to engineering operations.
- Serve as primary person for the On Scene Commander to prepare field reports.
- Provide unit up-to-date information on nature and status of engineering details.
- Represent engineering at all TRT meetings.
- Assist the team preparing objectives and field tasks required.
- Assist the team in preparation of any general plans.
- Keep On Scene Commander informed of any changing technical conditions.
- Update information on location and movement of spilled or emitted materials.
- Provide updates on nature and status of incident management operations.
- Ensure that Finance/Administration leaders are advised of all cost commitments by the operations section.
- Consider the need for an alternate or backup person for extended 24 hour coverage.
- Compile and maintain appropriate documentation.

Wellsite Engineering Checklist

Site Control

- Prepare technical field reports for the On Scene Commander.
- Keep On Scene Commander informed about any technical issues.
- Compile engineering related information for the Field Reports which includes:

Site Safety

- Receive information from contractors and IMT support.

Site Management

- Receive work assignments from the On Scene Commander.

- Obtain information needed for field reports from discussions with the On Scene Commander and by monitoring the Tactical and Supply Networks. Communications
- Receive schedule of the IMT Assessment Meetings from the On Scene Commander.
- Work with the On Scene Commander to compile information needed for the field reports (see lists under Engineering and Operations).
- Provide the On Scene Commander information needed for the field reports before the IMT Assessment Meetings.
- Utilize the Command Network to forward the field reports to the IMT team.

21.3.6 Information Technology Technician Role

This person will work with the On Scene Commander or Deputy On Scene Commander and will be responsible for organizing and managing all of the communication equipment at the On Scene Command Post, keeps all equipment functioning properly in order to transfer data and reports to the Emergency Crisis Room and the CRISIS MANAGEMENT TEAM at the incident location.

Information Technology Technician Responsibilities:

- Provide the On Scene Commander with information on the personnel, equipment, material and supply needs.
- Organize and manage all media related activities.
- Serve as advisor to the On Scene Commander on all matters relating to external communications.
- Prepare "If Asked" statements.
- Develop proactive methods for addressing "communication" concerns:
  - On Scene Equipment
  - Communication problems between the On Scene Equipment and Emergency Crisis Room equipment.
  - Equipment Limitations.
  - Others.
- Obtain the necessary approvals from the On Scene Commander, if needed, prior to installing the communication networks.
- Provide information on schedules related to the communication center.
- Ensure the IMT is advised of all cost commitments.
- Consider need for an alternate or backup person for extended 24 hour coverage.
- Compile and maintain appropriate documentation.

Information Technology Technician Checklist

Get Organized

- Check in at the On Scene Command Post and report to the On Scene Commander.
- If needed, establish a working area within the On Scene Command Post.
- Receive updates regarding communication problems.

Set Up and Maintain Information Center

- Utilize the On Scene Command Post as a primary source of information on the incident and the nature and status of emergency response operations.
- Provide guidance on the best type of information that will be needed to be interacted with TRT, IMT and CMT.

BEFORE MEETING:

- Meet with the On Scene Commander and Drilling Engineers to review:
  - Timing, location and objectives of meetings
  - Information to provide during report
- Meet with other personnel to receive a briefing on the nature and status of their work.
- Identify communication problems and solutions to be raised during the meeting.
- Prepare meeting report.

AFTER MEETING:

- Brief other personnel at the On Scene Command Post on items discussed during the meeting and assign action items as appropriate.
- Address assumed action items

Establish Strategic Objectives

- Assist the On Scene Commander in analyzing and identifying communication problems that need to be addressed.
- Provide communication strategies and objectives.

20333 State Highway 249, Suite 200
Houston, TX 77070 USA
Tel: +1-281-378-1523 | Fax: +1-281-370-6504
www.unitedsafety.net

Conduct Periodic Assessment Meetings.

BEFORE MEETING:

- Meet with the On Scene Commander to review:
- Timing, location and objectives of meetings
- Information to be provided during reports
- Identify problems and solutions to be raised during meetings.
- Prepare meeting reports.

DURING MEETINGS:

- Present reports and focus on the nature and status of work related to the objectives and tasks delegated by the On Scene Commander.
- Pay attention to reports made by other meeting attendees and ask questions when appropriate.
- Assume responsibility for action items delegated by the On Scene Commander.

AFTER MEETING:

- Brief other information technology members on items discussed during meetings and assign action items as appropriate.
- Address assumed action items.
- Prepare General Plans.
- Define Objectives: work with team preparing a plan to establish milestone(s) for completion of specific assigned tasks.

20333 State Highway 249, Suite 200
Houston, TX 77070 USA
Tel: +1-281-378-1523 | Fax: +1-281-370-6504
www.unitedsafety.net

22 ADM Incident Management & Command Post

22.1 Off Scene Incident Management Team (IMT)

Members having operation authority of ADM's operations will form the Incident Management Team (IMT) and operate in the Emergency Crisis Room (ECR). Additional members may be required to complete the responsibility requirements for the IMT. The Incident Commander will be in charge of this team and the purpose of the IMT is to support onsite activity in any way requested, and to disseminate information about the status of the incident as necessary to other personnel or entities within ADM. Incident Management Team (IMT) members typically include the following:

- Incident Commander (General Manager)
- Deputy Incident Commanders (Wells Team Leader, HSE Manager)
- Administration (Legal, Finance, HR, Communication)
- Operations and Engineering Superintendent
- Health, Safety and Environment Leader (Security, Medevac)
- Contracts and Purchasing Officer
- Logistics Manager

Depending on the specific situation, the members of this team may vary. **The actual makeup of the team will ultimately be determined by the Incident Commander. Some of these positions may not exist within ADM under normal operating conditions and would be delegated by the Incident Commander in case of an incident.**

An area for an Emergency Crisis Room has been designated as being the Emergency Response Room in ADM offices. It is imperative that this Command Post be of sufficient size to hold the Incident Management Team and have all of the modern communications equipment needed to communicate with the Tactical Response Team on location and the Crisis Management Team.

22.1.1 ADM Emergency Crisis Room

Remotely based members may convene in crisis centers elsewhere and videoconference or telephone conference into this room as required.

It is the responsibility of the Regional Crisis Management Practice Area Network Head, to ensure that the facilities in the crisis room are kept up to date and properly maintained.

Incident Management Team

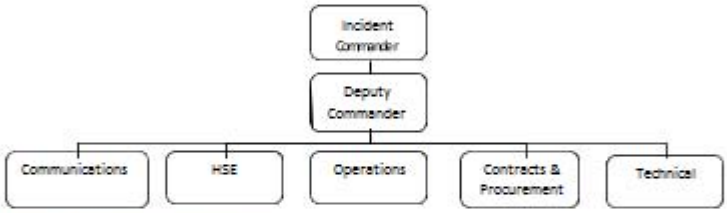

22-1 Incident Management Team (example)

22.2 Off Scene IMT Roles and Responsibilities (IMT)

Responsible for organizing and managing at-the-scene incident response operations in a safe and effective fashion and for keeping the balance of the Incident Management Team (IMT) informed about the nature and status of the incident and incident response operations.

22.2.1 Incident Commander Role

The Incident Commander for ADM will be the most Senior Person on site, or his alternate, and will be responsible for the overall management of emergency response operations and for serving as the Incident Management Team's (IMT) primary contact person with all involved or interested external parties.

Incident Commander Responsibilities:

- Ensure that personnel safety is accorded the highest priority during conduct of emergency response operations.
- Establish and maintain an organization that is capable of providing management direction to, and support for the on-scene tactical response operations.
- Supervise emergency response operations and ensure that they are carried out in a manner consistent with ADM's policy, appropriate government directives and the needs and concerns of impacted areas.
- Analyze incident potential.
- Establish Strategic Objectives and response priorities and ensure IMT and tactical response personnel are carrying out emergency response operations in a manner consistent with objectives and priorities.
- Ensure that all required and appropriate notifications have been made to senior management, government agencies, and any partners.
- Keep senior management informed of nature and status of incident and emergency response operations.
- Serve as primary contact person for ADM's senior management, government representatives and any partners.
- Review and approve requests for non- ADM owned response resources, allocated critical resources and authorize demobilization of resources.
- Ensure that source control and response operations are carried out safely and closely coordinated.
- Monitor and evaluate effectiveness of source control and response operations.
- Serve as ADM primary spokesperson of the Incident.
- Review and approve statements as they relate to emergency response operations.
- Approve and authorize implementation of Incident Action Plans (IAP).
- Approve and authorize implementation of General Plan (GP).
- Compile and maintain appropriate documentation.

Incident Commander Checklist

Get Organized

- Activate appropriate Incident Management Team (IMT) members, designate Deputy
- Incident Commanders and Section Chief(s).
- Determine a need for and, if necessary, order activation of Emergency Crisis Room (ECR).
- Establish presence in ECR.
- Unless Senior Well Engineer has done so, establish direct line of communications with On Scene Commander.
- Gather available incident facts and information on nature and status of tactical response operations.
- Understand problems being addressed by tactical responders and solutions being implemented by On Scene Commander to address problems.
- Size up information on emergency response operations to identify command problems, define work that must be done to address command problems and break work down into manageable tasks.
- Review staff assignments with IMT members.
- Instruct Section Chief(s) to determine ongoing staffing needs.
- Ensure the establishment of an Information Center.
- Establish time for conduct of Initial Incident Briefing Meeting.
- Work with Section Chief(s) to evaluate incident potential.
- Confirm that all required external notifications have been made.
- Establish a Unified Command Structure if government agency response personnel arrive in ECR to participate in emergency response operations.
- Forecast duration of emergency response operations. If necessary, establish "operational" periods and shift schedules.

Conduct Initial Incident Briefing Meeting

BEFORE MEETING:

- Review timing, location, objectives and agenda for meeting with the Deputy Incident Commander.
- Designate meeting Chairperson.
- Identify Incident Commander problems to be considered during meeting; break work to be done down into manageable tasks;
- Identify tasks to be addressed by other members of the IMT.

20333 State Highway 249, Suite 200
Houston, TX 77070 USA
Tel: +1-281-378-1523 | Fax: +1-281-370-6504
www.unitedsafety.net

DURING MEETING:

- Chair meeting, if appropriate.
- Conduct roll call.
- State nature and purpose.
- Review meeting protocol.
- Present initial Strategic Objectives and response priorities.
- Ensure action items are clearly defined at the end of the meeting; assign responsibilities for addressing the action items.
- Establish/confirm timing of next meeting.

AFTER MEETING:

- Address assumed action items
- Contact Corporate to discuss problems and solutions, if appropriate.
- Review and approve the minutes of the meeting provided.
- Analyze Incident Potential
- Instruct members of the Command and General Staff to be involved in preparation of Incident Potential Worksheet.
- When Incident Potential Worksheet is filled out, meet with the appropriate Command and General staff members to review the worksheet.
- Determine impacts of analysis on IMT and TRT response operations, particularly as they relate to composition and size of IMT and TRT organizations, and provide direction to members of the Command and General staff on steps to be taken, if any, to respond appropriately to incident potential.
- Contact Corporate via the Crisis Network to discuss results of analysis of incident potential.

Establish Strategic Objectives

- Analyze results of size-up and analysis of incident potential and identify "command" problems that need to be addressed.
- If available, review generic objectives to determine their applicability to the incident; revise generic objectives, if necessary.
- Approve generic objectives.
- Instruct other members of the IMT to review the results of their size-up efforts (including their analysis of incident potential), identify problems they believe need to be addressed, prepare the

objectives and provide the objectives.

- Meet to review and approve overall Strategic Objectives.

Conduct Periodic Assessment Meetings

BEFORE MEETING:

- Review timing, location, objectives and agenda for meetings with the Deputy Incident Commander
- Designate meeting Chairperson (usually Deputy Incident Commander).
- Be prepared to review Strategic Objectives and response priorities during meeting.
- Identify any new Incident Commander problems and solutions to be presented during meetings.

DURING MEETING

- Chair meeting, if appropriate.
- Conduct roll call.
- State nature and purpose.
- Review meeting protocol.
- Review Strategic Objectives and response priorities with meeting attendees.
- Receive status reports from meeting attendees; ensure adequate progress is being made in addressing Strategic Objectives.
- Present new Incident Commander problems and solutions and related task assignments to meeting attendees.
- Ensure action items are clearly defined; assign responsibilities for addressing action items.
- Establish/confirm timing of next meeting.

AFTER MEETING:

- Address assumed action items.
- Contact Corporate to discuss problems and solutions to be addressed before next meeting, if appropriate.
- Review and approve meeting minutes provided.
- Prepare incident action plans.
- Prepare General Plan

ESTABLISH MILESTONES:

- Determine need for General Plan.
- Determine when IMT is prepared to initiate work on General Plan.
- Approve critical tasks to be covered by General Plan.
- Approve concurrence on milestones for General Plan.

22.2.2 Deputy Incident Commander Role (Department Captain, Support Mgr., HSE Mgr.)

The person(s) will be designated by the Incident Commander and will be responsible for assisting the Incident Commander through the direct supervision of work being carried out by Operations, General Staff, and HSE.

Deputy Incident Commander Responsibilities

- Assume any responsibility delegated by Incident Commander.
- Ensure that Emergency Crisis Room (ECR) is set up and made operational in a timely fashion.
- Ensure that his/her Section gets organized in a timely fashion.
- Assist Incident Commander in analysis of incident potential and development of Strategic Objectives and response priorities.
- Coordinate activities of Section Chiefs to ensure conduct of safe, effective and efficient emergency response operations.
- Assist Incident Commander in ensuring that operations are carried out in a manner consistent with policy and appropriate government directives.
- Focus on communications; address communications problems as they arise.
- Ensure implementation of Incident Command System.
- Chair IMT Meetings, if instructed to do so by Incident Commander.
- Follow-up on action items identified during formal IMT meetings.
- Ensure that objectives and priorities are being addressed by balance of IMT and tactical response personnel.
- Interface with others to ensure that their problems and solutions are addressed by balance of IMT in a timely fashion.
- Provide units with information on personnel, equipment, material and supply needs for the Command staff.
- Provide Incident Commander informal briefings, as necessary, on the nature and status of incident and emergency response operations.
- Work with Operations and Engineering to ensure that appropriate documentation is compiled and forwarded to the Unit.

- Ensure that source control and response operations are closely coordinated, and resolve any conflicts that may arise between these operations.
- Ensure that appropriate company and/or government directives are communicated to and followed up on.
- Serve as secondary contact person for senior management, government representatives and local partners.
- Fill in for Incident Commander as needed.
- Consider need for a backup person for extended 24 hour coverage.
- Compile and maintain appropriate documentation.

Deputy Incident Commander Checklist

Get Organized

- Check in at ECR; report to Incident Commander.
- Monitor activation of IMT members; determine and advise Incident Commander on availability of key team members.
- If instructed to do so by the Incident Commander, determine availability of the Command staff personnel. If not available, advise the Incident Commander.
- Supervise activation of ECR and advise the Incident Commander when ECR is operational.
- Prepare organizational chart for the Command Section and then provide the chart to the Unit.
- Provide information on timing of initial Incident Briefing Meeting.

Conduct Initial Incident Briefing Meeting

BEFORE MEETING:

- Meet with Incident Commander to review timing, location, objectives and agenda for meeting.
- Meet with each meeting attendee before meeting to review:
  - Timing, location and objectives of meeting
  - Information to be provided during reports
- Ensure information in the Information Center is updated prior to the meeting.
- Ensure attendees are on time for the meeting.

DURING MEETING:

- Chair the meeting if requested to do so by the Incident

Commander:

- Conduct roll call
- State nature and purpose
- Review meeting protocol
- Ensure Situation Map and status boards are used effectively during the meeting.
- Ensure action items are recorded during the meeting.

AFTER MEETING:

- Address assigned action items.
- Ensure meeting attendees assume responsibility for and address assigned action items.

Analyze Incident Potential

- If requested, assist in the preparation of Incident Potential Worksheet.
- If requested, participate in meeting with the Incident Commander to review the worksheet.
- If requested, assist the Incident Commander in determining impacts of analysis on IMT and TRT response operations, particularly as they relate to composition and size of IMT and TRT organizations, and in providing direction to members of the Command and General Staff on steps to be taken, if any, to respond appropriately to incident potential.

Establish Strategic Objectives

- Assist the Incident Commander in analyzing results of the size-up process and in identifying "command" problems that need to be addressed by Strategic Operations.
- Assist the Incident Commander in reviewing generic Strategic Objectives to determine their applicability to the incident and in revising generic objectives.
- Assist the Incident Commander in approving generic/preparing Strategic Objectives.
- Work with Operations to size up incident, identify specific problems that need to be addressed and help prepare specific Strategic Objectives.
- Work with Unit Leaders to record approved Strategic Objectives on the status board in the Information Center.

Conduct Periodic Assessment Meetings

BEFORE MEETING:

- Meet with the Incident Commander to review timing, location, objectives and agenda for the meetings.
- Meet with each meeting attendee before each meeting to review:
  - Timing, location and objectives of meeting
  - Information to be provided during report
- Ensure information in the Information Center is updated before each meeting.
- Ensure meeting attendees are on time for each meeting.

DURING MEETING:

- Chair the meeting if requested to do so by the Incident Commander:
  - Conduct roll call
  - State nature and purpose
  - Review meeting protocol
- Ensure Situation Map and status boards are used effectively during the meeting.

22.2.3 Administration Officer Role

The senior administrator for ADM will be responsible for organizing and managing all government and community affair activities associated with emergency response operations.

Administration Officers Responsibilities:

- Provide the Incident Commander with information on personnel, equipment, material and supply needs.
- Organize and manage all government and community affair activities.
- Serve as principal advisor to the Incident Commander on all matters relating to external communications and interactions with non-directly involved government agencies and non-governmental organizations.
- Advise the Incident Commander on government affairs and community relations impacts of incidents and emergency response operations.
- Obtain necessary approval from the Incident Commander prior to the release of information to non-directly involved government agencies and non-governmental organizations.
- Select, retain, and supervise government affairs and media relation specialists, when needed.

- Provide status reports and inform about the status of work on all government affairs and community relation problems and solutions that are judged to be or have potential to become crisis situations.
- Serve as the IMT contact person for non-directly involved government agencies and non- governmental organization concerns:
    - Fact Sheets
    - Meetings
    - Tours
- As appropriate, provide information to non-directly involved government agencies and non-governmental organizations.
- As appropriate, arrange and conduct meetings with non-directly involved government agencies and non-governmental organizations.
- Provide the Unit with information on scheduled meetings for posting in the Information Center.
- As appropriate, organize, conduct and assist in arranging tours for non-directly involved government agencies and non-governmental organizations.
- Monitor statements made by non-directly involved government agencies and non- governmental organizations.
- Keep the Incident Commander informed about content and tenor of statements made by non-directly involved government agencies and non-governmental organizations.
- Prepare the Incident Commander for interactions with non-directly involved government agencies and non-governmental organizations.
- Ensure that Finance/Administration is advised of all cost commitments.
- Consider the need for an alternate or backup person for extended 24 hour coverage.
- Compile and maintain appropriate documentation.

Administration Officer Checklist

- Check in at the Emergency Crisis Room (ECR) and report to the Incident Commander.
- Establish a working area in the ECR.
- Receive updates on the situation from the Incident Commander.

Set Up and Maintain Information Center

- Utilize the Information Center as a primary source of information on the

incident, nature and status of emergency response operations.

- Provide the Unit with information on timing of all meetings to be held with non-directly involved government agencies and non-governmental organizations.
- Provide the Unit guidance on the type of information needed for interactions with non-directly involved government agencies and non-governmental organizations.

Establish Strategic Objectives

- Assist the Incident Commander in analyzing the results of the size-up process and in identifying government affairs and community relation problems that need to be addressed.
- If available, review government affairs and community relation related generic objectives to determine their applicability to the incident and if necessary, revise the generic objectives.
- Approve Strategic Objectives.
- Provide the Unit with government affairs and community relation related strategic objectives.

Prepare General Plan

- **DEFINE OBJECTIVES**
  - Work with the team preparing the General Plan to establish milestone(s) for the completion of government affairs and community relation tasks.
  - Identify government affairs and community relation task(s) to be covered by the General Plan and provide information to the team on preparing the General Plan.

- **PERFORM DETAILED ASSESSMENT**
  - Provide the team preparing the General Plan guidance on the kind and quantity of resources needed to complete the government affairs and community relation task(s) within the milestone timeframe.

- **APPROVE AND IMPLEMENT PLAN**
  - Review government affairs and community relation task(s) covered by the General Plan and provide the team preparing the General Plan

comments regarding the Plan.

22.2.4 Operations Engineering Role

The role for this position will correspond to those employees occupying any of the IMT engineering or operational positions. This position should provide strategic direction and support to the On Scene Commander. Also, these positions will be responsible for receiving information on the nature and status at-the-scene emergency response operation and provide information to the Incident Commander and other members of the IMT.

Operations and Engineering Responsibilities:

- Provide the Unit with information on personnel, equipment, material and supply needs.
- Size up incident, identify operation problems and solutions and break work Operations down into manageable tasks.
- Assign tasks to appropriate operation personnel and maintain proper span-of-control.
- Assume responsibility for tasks delegated by the Incident Commander.
- Assist the Incident Commander in the analysis of incident potential and the preparation of
- Strategic Objectives and response priorities.
- Address Strategic Objectives and response priorities as they relate to work of Operations.
- Serve as the primary IMT contact person for the On Scene Commander and receive field reports from the On Scene Commander.
- Review and ensure the appropriateness of the strategy and tactics being employed by the On Scene Commander and provide the necessary strategic direction.
- Provide the Unit up-to-date information on the nature and status of the tactical response operations.
- Represent Operations at all formal IMT meetings and brief the Incident Commander and the members of the Command and General Staff on the nature and status of the work being done by the Operations Section.
- Assist the team preparing the Incident Action Plans (IAP) in the preparation of objectives and field assignments for the Incident Action Plans.

- Assist the team in preparation of the General Plan.
- Ensure that the personnel involved in the response operations have the personnel, equipment, materials and supplies needed to carry out those operations in a safe, effective and efficient manner.
- Ensure the Operations Section personnel are aware of and follow safety policies, appropriate government agency directives and the Site Safety Plan.
- Ensure that concerns of government agencies and impacted citizens are adequately considered in the formulation and execution of the response strategies.
- Keep the On Scene Commander informed of changing weather conditions.
- Receive information on the location and movement of spilled or emitted materials.
- Provide updates on the nature and status of the tactical response operations.
- Authorize the demobilization of the emergency response resources.
- Ensure the Finance/Administration Leaders are advised of all cost commitments by the Operations Section.
- Ensure the appropriate documentation is compiled by the On Scene Commander and then forwarded to the Unit.
- Consider the need for an alternate or backup person for extended 24 hour coverage.
- Compile and maintain appropriate documentation.

Operations and Engineering Checklist

Get Organized

- Assume responsibility for tasks delegated by the Incident Commander.
- Meet with the Operations Section personnel and prepare an organizational chart for the Operations Section.
- Identify and define the work that must be completed to address the Operations Section problems and solutions and break work down into manageable tasks.
- Delegate responsibilities for tasks to be performed by the Operations Sections Personnel.
- Establish a direct line of communications (i.e. over the Command Network) with the On Scene Commander.
- Establish communication protocol with the On Scene Commander.

Set Up and Maintain Information Center

- Provide initial and, as necessary, updated organization chart(s) for the Operation Section.
- Utilize Field Reports to provide initial and, as necessary, updated Incident Facts related to the description of the incident. Description of spilled/emitted materials, status of emergency response operation and impacts.
- Utilize the Field Reports to provide initial and, as necessary, updated on-scene weather information.
- Utilize the Field Reports to provide the initial and, as necessary, updated mass balance information.
- Utilize the Field Reports to provide initial and, as necessary, updated information for the situation map which includes:
  - Location of source(s)
  - Location of spilled/emitted material(s)
  - Location of staging area(s)
  - Location of Isolation Perimeter/secured access point(s) to Isolation Perimeter
  - Location of tasks
  - Wind speed and direction
- Utilize Field Reports to provide initial and, as necessary, updated information on "available" resources by staging area, "assigned" resources by task and location and out- of-service" resources by location.

Conduct Initial Incident Briefing Meeting

BEFORE MEETING:

- Receive an Incident Briefing Document from the On Scene Commander prior to the meeting.
- Meet with the Units to update the Situation Map and status boards in
- the Information Center.
- Meet with the Deputy Incident Commander to review:
  - Timing, location and objectives of the meeting
  - Information to provide during report
- Identify Operations Section problems and solutions raised during the meeting.

- Prepare meeting report.

DURING MEETING:

- Present report, focus on overall strategy of tactical response operations, tasks being performed to implement strategy, progress being made, problems being encountered and help needed from IMT.
- Pay attention to reports made by other meeting attendees and ask questions as needed.
- Assume responsibility for Action Items delegated by the Incident Commander.

AFTER MEETING:

- Brief other Operations Section personnel in the ECR and the On Scene Commander on the items discussed during the meeting and assign action items as needed.
- Address assumed action items.

Set Up and Maintain Information Center

- If requested, participate in a meeting with the Incident Commander to review any technical issues that need to be addressed.
-

Establish Strategic Objectives

- Receive information problems being addressed by the TRT and solutions being implemented to address the problems from the On Scene Commander.
- Ensure the Incident Commander is comfortable with the TRT strategy.
- Size up the incident and the TRT response to the incident to identify any additional problems not currently being addressed by the TRT.
- Identify solutions to additional problems.
- Prepare solution based Strategic Objectives.

Conduct Periodic Assessment Meetings

BEFORE MEETING:

- Receive updated Field Reports from the On Scene Commander prior to the meetings.
- Meet with the Units to update the Situation Map and Status Boards in
- the Information Center.
- Meet with the Deputy Incident Commander to review:
- Timing, location and objectives of the meeting
- Information to provide during report
- Identify Operations Section problems and solutions.
- Prepare meeting reports.

DURING MEETING:

- Present reports; focus on the nature and status of work related to Strategic Objectives, tasks delegated by the Incident Commander and Operations Section specific tasks.
- Pay attention to reports made by other meeting attendees and ask questions.
- Assume responsibility for the Action Items delegated by the Incident Commander.

AFTER MEETING:

- Brief other Engineering and Operations Section personnel on items discussed during the meetings and assign action items.
- Address assumed action items.

Prepare General Plan

DEFINE OBJECTIVES

- Work with the team preparing the General Plan to identify the critical tasks and milestones for completion of the Operations Section tasks.
- Work with the team preparing the General Plan to identify the
- Operations Section directed tasks to be covered by the General Plan.

PERFORM DETAILED ASSESSMENT

- Provide the team preparing the General Plan information on response techniques that will be utilized to treat, contain, recover, store and dispose of discharged/emitted materials.
- Provide the team preparing the General Plan guidance on kind and
- quantity of resources needed to complete the Operations Section directed tasks within the milestones time frame.

APPROVE AND IMPLEMENT PLAN

- Review the Operations Section tasks covered by the General Plan.

22.2.5 Quality Assurance/Quality Control Officer Role

Responsible for addressing risk assessment issues that arise for the response personnel, providing guidance on the proper methods for performing a well control and recovery operation, arranging additional resources required for the response operations, performing the risk assessments and investigations as required.

22.2.6 Logistics Coordinator Role (Supply Chain Manager)

The Logistics Coordinator provides all resources and support for the response operations, including procurement, delivery arrangements and deployment of the resources.
Resources may include facilities, transportation supplies, equipment maintenance, food, water, shelter, staffing support and any services and material in support of the incident. This is a huge task which will require locating equipment proactively.

In small incidents the Logistics Coordinator may also be responsible for financial and cost analysis aspects of the incident.

Logistics Coordinator Responsibilities:

- Facilities
- Transportation vehicles and supplies
- Equipment Maintenance
- Food/Water/Shelter supplies and facilities
- Communications equipment and personnel
- Personnel support
- Prepare periodic status reports for the Incident Commander
- Provide On Scene Staging Coordinator the personnel, equipment, material and supply needs

Logistics Coordinator Checklist

Get Organized

- Check in at the Emergency Crisis Room (ECR) and report to the Incident Commander.
- Establish a working area in the ECR.
- Receive updates on situation from the Incident Commander.

Set up and maintain Information Center

- Utilize the Information Center as a primary source of information on the incident and the nature and status of emergency response operations.

Conduct Initial Incident Briefing Meeting

BEFORE MEETING:

- Meet with the Deputy Incident Commander to review:
- Timing, location and objectives of the meeting
- Information to provide during report
- Meet with other personnel in the ECR to receive a briefing on the nature and status of their work.
- Identify problems and solutions to be raised during the meeting.

Prepare meeting reports.

DURING MEETING:

- Present report and focus on the nature and status of any Logistic problems.
- Pay attention to reports made by other meeting attendees and ask
- questions.
- Assume responsibility for action items delegated by the Incident Commander.

AFTER MEETING:

- Brief other logistics personnel on items discussed during the meeting and assign action items as needed.
- Address assumed action items.

Analyze Incident Potential

- If requested, participate in a meeting with the Incident Commander to review the worksheet that references the supply of equipment.

Establish Strategic Objectives

- Assist the Incident Commander in analyzing the results of the size up process and in identifying logistical problems that need to be addressed by the Strategic Objectives.
- Set up a database of the type of equipment and facilities available in country and abroad with the timing for moving these to a staging area.

22.2.7 Planning and Cost Control Role (Finance Manager)

The Planning and Cost Control is responsible for all accounting and financial aspects of the disaster and any other administrative requirements.

Planning and Cost Control Responsibilities:

- Function as the head of the Finance Section.
- Set up the accounting system to be used for the emergency.
- Oversee all accounting and financial aspects of the disaster.
- Prepare periodic budget reports for the Incident Commander and files for each major site for tracking expenses for the insurance assistance application requirements.
- Provide the Deputy Incident Commander with information on personnel, equipment, material, and supply needs.
- Serve as a financial advisor to the Incident Commander.
- Prepare summary reports which examine the financial status, options and courses of action that can be followed.
- Determine applicable short term and long term financial plans.
- Advise the Incident Commander and Section Chiefs on the type of documentation that must be compiled to support incident related expenditures.
- Review documentation to ensure that it is being compiled in a manner consistent with the documentation guidelines.
- Handle all contract related financial matters.
- Provide financial guidance to the Logistics Section Chief or Procurement Unit on the terms and conditions of new or amended contracts.
- Compile and maintain appropriate documentation.

Planning and Cost Control Checklist

Get Organized

- Check in at the Emergency Crisis Room (ECR) and report to the Incident Commander.
- Establish a working area in the ECR.
- Receive updates on the situation from the Incident Commander.

Set Up and Maintain Information Center

- Utilize the Information Center as a primary source of information on the incident and the nature and status of emergency response operations.

Analyze Incident Potential

- If requested, participate in a meeting with the Incident Commander to review the worksheet.
- Set up a database of the type of equipment and facilities available in country and abroad with the timing for moving these to a staging area.

Establish Strategic Objectives

- Assist the Incident Commander in analyzing results of the size up process and in identifying planning and cost problems that need to be addressed by the Strategic Objectives.
- If available, review the Planning and Cost Control related generic Strategic Objectives to determine their applicability to the incident and, if necessary, revise the generic objectives.
- Set up and approve the accounting system to be used for the emergency and oversee all accounting and financial aspects of the disaster.

20333 State Highway 249, Suite 200
Houston, TX 77070 USA
Tel: +1-281-378-1523 | Fax: +1-281-370-6504
www.unitedsafety.net

22.2.8 Contracts and Purchasing Officer Role

This person will be responsible for providing advice on Planning, Cost Control, Purchasing and Contractual issues associated with emergency response operations.

Contracts and Purchasing Officer Responsibilities:

- Provide the Incident Commander with information on personnel, equipment, material and supply needs.
- Serve as a Planning and Cost Control Advisor to the Incident Commander.
- Prepare summary reports which examine the Planning, Purchasing and Contracts situation, key issues associated with the incident and operations and courses of action that can be followed; follow up on selected options and/or courses of action to determine their effectiveness.
- Determine applicable plans to overcome assist in the remediation of the Incident and develop necessary short term and long term strategies.
- Determine ADM and its partners' legal relationship with other involved parties.
- Ensure that no conflicts of interest arise with other parties, insurers, etc. during conduct of emergency response operations.
- Advise members of IMT on the need to restrict access to the affected facility and/or incident related facilities for legal or insurance reasons.
- Advise Incident Commander and others on type of documentation that must be compiled to support incident related litigation.
- Review documentation to ensure that it is being compiled in a manner consistent with documentation guidelines.
- Handle all contract related legal matters.
- Review contracts prior to their execution.
- Provide legal guidance to the Unit on terms and conditions of new or amended contracts.
- Assist the Finance/Administration Unit in establishing and implementing third party settlement procedures and arranging for adjustment assistance.
- Ensure the Finance/Administration is advised of all cost commitments.
- Consider the need for an alternate or backup person for extended 24 hour coverage.
- Compile and maintain appropriate documentation.

Contracts and Purchasing Officer Checklist

Get Organized

- Check in at the Emergency Crisis Room (ECR) and report to the Incident Commander
- Establish a working area in the ECR.
- Receive updates on the situation from the Incident Commander.
-

Set Up and Maintain Information center

- Utilize the Information Center as a primary source of information on the incident and nature and status of the emergency response operations.
-

Analyze Incident Potential

- If requested, participate in a meeting with the Incident Commander to review the worksheet.

Establish Strategic Objectives

- Assist the Incident Commander in analyzing the results of the size up process and in identifying planning and cost problems that need to be addressed by the Strategic Objectives.
- If available, review the Planning and Cost Control related generic Strategic Objectives to determine their applicability to the incident and, if necessary, revise the generic objectives.
- Approve the generic/prepare Strategic Objectives.

22.2.9 Health, Safety and Environment Officer Role

Responsible for supporting the Site Safety Officer and for providing expertise on safety issues that may arise during the conduct of emergency response operations.

Health, Safety and Environmental Officer Responsibilities:

- Provide the Incident Commander with information on personnel, equipment, material and supply needs.
- Receive briefings from the TRT Site Safety Officer.
- Brief the Incident Commander on hazards present at the incident scene and measures being instituted to protect the response personnel against hazards.
- Ensure compliance with all relevant and governmental safety requirements.
- Exercise emergency authority to prevent or stop unsafe acts.
- Brief Section Chiefs on safety concerns and precautions and ensure key personnel are familiar with site safety issues.
- Monitor personnel and contractors for conformance with incident specific Site Safety
- Plan and associated requirements.
- Set up a system to identify and eliminate safety hazards in all aspects of emergency response operations.
- Ensure response personnel have the necessary level of safety training.
- Attend IMT meetings and provide reports on the nature of safety concerns and status of work on safety related tasks.
- Coordinate safety related communications.
- Work with the Safety and Health Group to prepare and issue safety bulletins on issues affecting or likely to affect work safety.
- Work with the Medical Unit to establish procedures for handling medical emergencies and evacuations.
- Provide information and advice to the On Scene Commander, Site Safety Officer, Incident Commander and others regarding toxic properties of an immediate and long term public health issues associated with chemical involved in incidents.
- Assist the Information Officer in describing any toxic hazards to the media and public.
- Obtain and provide the Site Safety Officer copies of Material Safety data Sheets (MSDS) for spilled/emitted materials.
- Provide the Incident Commander advice on when it is safe to enter or return to an impacted area.
- Review the Incident Action Plan field assignments and, if necessary, work with the Safety and Health Group to prepare changes to the Site Safety Plan.
- Ensure Finance and Administration is advised of all cost commitments.

20333 State Highway 249, Suite 200
Houston, TX 77070 USA
Tel: +1-281-378-1523 | Fax: +1-281-370-6504
www.unitedsafety.net

- Consider the need for an alternate or backup person for extended 24 hour coverage.

Health, Safety and Environmental Officer Checklist

Get Organized

- Check in at the Emergency Crisis Room (ECR) and report to the Incident Commander
- Establish a working area in the ECR.
- Establish a line of communication (i.e., over the Command Network) with the Site
- Safety Officer.
- Receive information from the Site Safety Officer and brief the Incident Commander on the following:
  - Status of personnel (i.e., missing, injured, dead)
  - Hazards present
  - PPE requirements
  - Decontamination requirements
- Receive information from the Site Safety Officer and brief the Planning Section (i.e., Chief, Safety and Health Group and the Situation Unit on the following:
  - Hazards present
  - Location of hazard control zones
  - Type of decontamination required in each contamination reduction zone
  - Location of the first aid station(s)
  - Emergency medical procedures
- Address needs of the Site Safety Officer.
- Identify and define the work that must be done to address problems and solutions and break work down into manageable tasks.
- Receive updates from the Incident Commander.
- Assume responsibility for tasks delegated by the Incident Commander.
- Work with the Safety and Health Group to prepare the incident specific Site Safety Plan.

Set Up and Maintain Information Center

- Provide initial and, as necessary, updated incident facts related to safety considerations and initial and, as necessary, updated information on safety and health conditions.
- Provide initial and, as necessary, updated information on the location of hazard control zones, decontamination areas and first aid station(s) for the Situation Map.

- Establish a line of communication (i.e., over the Command Network) with the Site Safety Officer.

Analyze Incident Potential

- If requested, participate in a meeting with the Incident Commander to review the worksheet.

Establish Strategic Objectives

- Assist the Incident Commander in analyzing the results of the size up process and in identifying the safety problems that need to be addressed by the Strategic Objectives
- If available, review the safety related generic Strategic Objectives to determine their applicability to the incident and, if necessary, revise the generic objectives.
- Approve the generic/prepare the safety related Strategic Objectives.
- Provide the safety related Strategic Objectives.

Prepare General Plan

- DEFINE OBJECTIVES
  - Work with the team in preparing the General Plan to establish milestone(s) for completion of safety and medical tasks.
  - Identify safety and medical tasks to be covered by the General Plan and
  - Provide information to the team preparing the General Plan.
- PERFORM DETAILED ASSESSMENT
  - Provide the team preparing the General Plan guidance on kind and quantity of resources needed to complete the safety tasks within the milestone(s) time frame(s).
- APPROVE AND IMPLEMENT PLAN
  - Review the Safety tasks covered by the General Plan and provide the team preparing the General Plan comments on the plan.

22.2.10 Information Technology Coordinator Role

This person will work with the Incident Commander and will be responsible for organizing and managing all communication equipment at the Emergency Crisis Room so as to communicate and transfer data to the On Scene Command Post as well as the 's CRISIS TEAM.

Information Technology Coordinator Responsibilities:

- Provide the Incident Commander with information on personnel, equipment, material and supply needs.
- Organize and manage all media related activities.
- Serve as principal advisor to the Incident Commander on all matters relating to external communications.
- Prepare "If Asked" statements.
- Develop proactive methods for addressing "communication" concerns:
  - On Scene Equipment
  - Emergency Crisis Room Equipment
  - Communication problems between the On Scene Equipment and Emergency Crisis Room Equipment
  - Equipment limitations
  - Others
- Obtain necessary approvals from the Incident Commander prior to installing communication networks.
- Provide information on schedules related to the Communications' Center.
- Ensure that the IMT is advised of all cost commitments.
- Consider the need for an alternate or backup person for extended 24 hour coverage.
- Compile and maintain appropriate documentation.

Information Technology Coordinator Checklist

Get Organized

- Check in at the Emergency Crisis Room (ECR) and report to the Incident Commander.
- If needed, establish a working area in the ECR.
- Receive updates regarding communication problems from Incident.

Set Up and Maintain Information Center

- Utilize the Information Center as a primary source of information on the incident and the nature and status of emergency response operations.
- Provide guidance on the best type of information that will be needed to be interacted with the TRT, IMT and CMT.
- Work with the Unit to establish a location in the Information Center for posting important information or data.

- Conduct an initial Incident Briefing Meeting.

Establish Strategic Objectives

- Assist the Incident Commander in analyzing and in identifying communication problems that need to be addressed.
- Provide communication strategies and objectives.

Prepare General Plan

- **DEFINE OBJECTIVES**
  - Work with the team preparing a plan to establish milestone(s) for completion of specific tasks.

20333 State Highway 249, Suite 200
Houston, TX 77070 USA
Tel: +1-281-378-1523 | Fax: +1-281-370-6504
www.unitedsafety.net

23 Example of a Crisis Management Team (CMT) (if applicable)

23.1 Crisis Management Team (CMT)

The CRISIS MANAGEMENT TEAM will be based in the ADM, Corporate Office. This will enable the CRISIS Chair to head the CRISIS MANAGEMENT TEAM to support the Emergency Crisis Room (ECR) in Decatur. The Incident Commander in the Decatur will be the Liaison between the Incident Management Team and the CRISIS MANAGEMENT TEAM. Depending on the needs to interface with the outside world, the Organization will determine which positions should be in the CMT depending. The following positions are given as an indication.

23.1.1 Crisis Management Chair

- Confirms and announces the occurrence of an incident and its level to team members.
- Coordinates all duties and actions.
- Confirms and modifies committee member duties.
- Informs Corporate of external relations of the incident and plan of action.
- Approves information releases and communication materials required.
- If applicable, informs local authorities.
- Official communicator on progress and remedial undertakings.

23.1.2 Internal Communicator (Representative Responsible for Human Resources)

- Dictates and submits correspondence to corporate authorities, security and employees.

- Tends to all concerns from employees and their family members.
- Makes contact with those employees affected by the incident and their family members.

23.1.3 Information Officer

- Tends to all media questions related to the incident.
- Transfers all non media issues related to the incident to the corresponding committee members that are approved by the Crisis Chair.

23.1.4 External Matters Information Officer

- Communicates as required on the incident and remedial actions in conjunction with the committee director.
- Dictates and submits correspondence to external sources.
- Represents the company in all news media interviews.
- If there is a need to activate a national crisis committee, he/she will coordinate communication tasks.

23.1.5 Technical Staff Corporate Members

- Compile documented information.
- Assist the committee members on all technical and non technical details.
- They are the connection between the solution of the incident and the committee.

23.1.6 Administrative Assistant

- Documents the facts and all decisions made during the crisis.
- Maintains communication with the Crisis Chair of all relevant facts.

23.1.7 Liaison Officer

- Be the primary link between the CRISIS MANAGEMENT TEAM and outside agencies that need to be informed of activities.
- Provide the Crisis Chair with information on personnel, equipment, material and supply needs.
- Serve as the principal advisor to the Crisis Chair on all matters relating to the status of the incident and recovery operations.

- Advise the Crisis Chair on government affairs and community relation impacts caused by the incident.

20333 State Highway 249, Suite 200
Houston, TX 77070 USA
Tel: +1-281-378-1523 | Fax: +1-281-370-6504
www.unitedsafety.net

Appendix H: Well Closure Plan

The following is an excerpt from the Revised UIC Form 4g document.

Appendix XIII.C – Revised UIC Form 4g

10 UIC Form 4g, Plugging and Abandonment

Last Revised: 3/31/2010

ILLINOIS ENVIRONMENTAL PROTECTION AGENCY
UNDERGROUND INJECTION CONTROL PERMIT APPLICATION

FORM 4g - PLUGGING AND ABANDONMENT PROCEDURE

USEPA I.D. NUMBER ILD984791459
IEPA I.D. NUMBER 1150155136
UIC Well Number CCS #1

I. Description of Plugging Procedures, see instructions

The plugging and abandonment design reflects minimum requirements to sustain the integrity of the caprock to ensure CO_2 remains in the Mt. Simon. Any unforeseen changes necessary to plug and abandon this well will meet or exceed these requirements in terms of strength or CO_2 compatibility. Appendix E has the Engineering Technical Report signed and sealed by an Illinois Registered Professional Engineer.

A. Abandonment during construction

Removal of subsurface well features: There are three scenarios in which abandonment during well construction (or drilling) and completion while the wellbore is open or uncased: Drilling the Surface Hole (<300 ft MD), Drilling Intermediate Hole (<5,000 ft MD), and Drilling Long-String Hole (<7,500 ft MD).

During all three scenarios, the drill string (drill collars, drill pipe, and drill bit) is the most likely equipment in the hole. Every attempt will be made to recover all of this equipment prior to abandonment.

If drill pipe, drill collars and/or drill bit are not retrieved and must be abandoned in the wellbore, no unique plugging procedure is required and plugs will be placed as described in the UIC permit application (4g.I.C). The same procedure will be used in the scenario where any testing tool, such as a core barrel, drill stem test assembly, or non-radioactive well logging tool, cannot be retrieved or is abandoned in the well.

If a radioactive well log is lost in the hole (density and/neutron porosity), current Nuclear Regulatory Commission (NRC) regulations will be followed. A 300 foot, red cement plug will be placed immediately above the lost logging tool. An angled, kick-plate will be placed above this plug to divert any subsequent drilling that may coincidentally enter this wellbore. Current NRC regulations require that the surface casing remain extended above the ground surface with an informative ground plate welded to the pipe. The plate includes information about the well to identify what is in the hole.

Plug Placement Method: The method of placing the plugs is the **Balanced Plug** method. This is a basic plug spotting process that is generally considered more efficient and considered compliant with accepted industry practices.

B. Abandonment after injection

Removal of subsurface well features: Casing: All casing used in this well will be cemented to surface and will not be retrievable at abandonment after injection.

Tubing and Packer: After injection, the injection tubing and packer will be the only injection equipment in the cased hole. Every attempt will be made to remove the injection tubing and packer. If the packer cannot be released and removed from the cased hole, an electric line with tubing cutter will be used to cutoff the tubing above the single packer.

Plug Placement Method: The **Balanced Plug** placement method will be used. This is a basic plug spotting process that is generally considered more efficient and considered compliant with accepted industry practices.

C. Type and quantity of plugging materials, depth intervals

In addition to the proper volumes, placement of plugs on depths approved by the agency (the minimum requirements), all cement will be previously tested in the lab, a Schlumberger CemCADE will be performed using actual well information such as actual depth, temperature on bottom, hole conditions. During the plugging operations, both wet and dry samples will be collected for each plug spotted to ensure quality of the plug.

All casing will be cemented to surface and no casing will be retrieved. From the surface, at least 3 feet of all the casing strings will be cutoff well below the plow line and a blanking plate with the required permit information will be welded to the top of the cutoff casing.

D. Detailed plugging and abandonment procedures

Notifications, Permits, and Inspections (Prior to Workover or Rig Movement)

Notifications, Permits, and Inspections are the same for plug and abandonment during construction and post-injection.

1. Notify Illinois EPA 48 hours prior to commencing operations. Insure proper notifications have been given to all regulatory agencies for rig move.

2. Make sure all permits to P&A have been duly executed by all local, State & Federal agencies and ADM have written permission to proceed with planned ultimate P&A procedure.

3. Ensure in advance that a pre-site inspection has been performed and the rig company has visited the site and is capable of transporting rig, tanks & ancillary equipment to perform P&A operations. Notify all key third parties of expected work scope, and ensure third party contracts for work are in place prior to move in.

4. Have copies of all government permits prior to initiating operations and maintain on location at all times. Check to see if conditions of approval have been met.

5. Make sure partners (U.S. DOE, IEPA and ADM) approvals have been obtained, as applicable.

6. Make sure all necessary forms for Schlumberger paperwork are on the rig, i.e., NPDES, safety meetings, trip sheets, etc.

Table 1: Plugging & Abandonment Contact List

Name	Department/Pos	Office	Fax	Mobile	Home
Paul Hughes, Jr., P.E.	Schlumberger-Operations	281-340-8658	281-285-0165	832-715-9060	281-781-8545
Robert J. Finley	ISGS Project Management	217-244-8389	217-333-2830	217-649-1744	217-384-6841
Tom Stone	ADM Project Engineer	217-424-5897			
Mark Carroll	ADM Environmental Coordinator	217-451-2720			
Kevin Lesko	Illinois Environmental Protection Agency	217-524-3271	217-524-3291		
	Federal Regulatory				

Volume Calculations

Volumes will be calculated for specific abandonment wellbore environment based on desired plug diameter and length required. Volume calculations are the same for plug and abandonment during construction and post-injection.

1. Choose the following:
    a. Length of the cement plug desired.
    b. Desired setting depth of base of plug.
    c. Amount of spacer to be pumped ahead of the slurry.

2. Determine the following:
    a. Number of sacks of cement required.
    b. Volume of spacer to be pumped behind the slurry to balance the plug.

c. Plug length before the pipe is withdrawn.
d. Length of mud freefall in drill pipe.
e. Displacement volume required to spot the plug.

3. See generic calculations in Figure 51 and have Schlumberger cementer and wellsite supervisor both review calculations prior to spotting any plug.

Note: For each cementing operation the Schlumberger cementer and the wellsite supervisor will verify via the cementing handbook or iHandbook all calculations and have the Project Manager approve the manner and procedure for said cementing operations. Any amendments to the plugging program will require an exemption approved in writing from the Project Manager.

Plugging and Abandonment Procedure for "During Construction" Scenario:

Pumping the Cement Job (Figure 52)

1. Trip in Hole (TIH) to the desired depth (drill pipe tags the base of the desired plug depth).
2. Shut down circulating trip tank on wellbore.
3. Break circulation and condition mud as required. Circulate at least until the pit levels stabilize.
4. Mix and pump cement and spacers.
5. Displace with the predetermined mud volume.
6. Shut down cementing unit and allow mud to freefall.
7. Near the end of the freefall, begin pulling out. Check to verify if we are pulling dry or wet.

Pulling Out of the Plug (Figure 52)

8. Resume circulating trip tank on the wellbore. Slowly pull the drillstring out of the plug and continue trip out of hole (TOH) until 2-3 stands above the top of the plug. Slowly pump 5-10 bbls to clear the drill pipe. Run circulating trip tanks continuously.

9. Do not attempt to reverse circulate because of potential contamination of the cement plug and to avoid over-pressuring the wellbore annulus. TOH.

10. Waiting on cement (WOC) minimum 12 hours, make up bottom hole assembly (BHA) and TIH to tag plug and record same. If tag will hold 5-10K lbs weight, pull up, circulate 1-2 stands above and continue with next balanced plug (either in open hole or inside casing) to properly comply with all local, state and federal regulations governing P&A operations (Table in Form 4g.I.C).

11. After spotting of all plugs, pull out of hole (POOH) laying down all drill pipe and drill collars, break out BHA

12. Finish cutting off below plow line (or per local, state or regulatory guidelines) all casing, dump 2-5 sacks of G cement in surface hole below plow line and weld plate on top of casing stub. Place marker as required by agencies.

13. After rig is released, commence with restoring site to as original condition as possible or per local, state or federal guidelines.

14. Complete plugging forms and send in with charts and all lab information to all state, local or federal agencies, as is required.

Plugging and Abandonment Procedure for "After Injection" Scenario:

1. Mobilize workover (WO) or Plugging Rig Equipment. Give IEPA and DNR 48 hours notice before commencing operations.

2. Move in rig to ADM CCS#1 location. Notify the Project Coordinator before moving rig. Ensure all overhead restrictions (telephone, power lines, etc) have been adequately previewed and managed prior to move in and rig up (MI & RU). All CO_2 pipelines will be marked and noted to WO rig supervisor prior to moving in (MI) rig. Move rig onto location per operational procedures.

3. Conduct a safety meeting for the entire crew prior to operations, record date and time of all safety meetings and maintain records on location for review.

4. Make daily "Project Inspection" walks around the rig. Immediately correct deficiencies and report deficiencies during the regulatory discussion during morning meetings/calls. Maintain International Association of Drilling Contractors (IADC) or plugging reports daily at the WO rig log book or doghouse.

5. MI rig package and finish rigging up hoses, hydraulic lines, etc.

6. Open up all valves on the vertical run of the tree. Check pressures.

7. Rig up pump and line and test same to 2,500 psi. Fill casing with kill weight brine (9.5 ppg). Bleeding off occasionally may be necessary to remove all air from the system. Keep track and record volume of fluid to fill annulus (Hole should be full). If there is pressure remaining on tubing rig to pump down tubing and inject two tubing volumes of kill weight brine. Monitor tubing and casing pressure for 1 hour. If both casing and tubing are dead then nipple up blowout preventers (NU BOP's). Monitor casing and tubing pressures.

8. If needed, if well is not dead nor pressure cannot be bled off of tubing, rig up (RU) slickline (SL) and set X-lock plug in X nipple located in X-Plug in tailpipe below packer. Circulate well with kill weight brine. Ensure well is dead. ND tree. NU BOP's and function test same. BOP's should have 4 ½"single pipe rams on top and blind rams in the bottom ram for 4 ½" Test BOP's as per local, state or federal provisions or utilize higher standard, 30 CFR250.616. Test pipe rams and blind rams to 250 psi low, 3,000 psi high. Test annular preventer to 250 psi low and 3,000 psi high. Test all TIW's, IBOP's choke and kill lines, choke manifold, etc. to 250 psi low and 3,000 psi high. **NOTE: Make sure casing valve is open during all BOP tests.** After testing BOPs pick up 4 ½ tubing string and unlatch seal assembly from seal bore. Rig slick line and lubricator back to well and remove X- plug from well. Rig to pump via lubricator and keep well dead.

9. RU 4 ½" rig hydraulic tubing tongs for handling of production tubing. Pick back up on tubing string and pull seal assembly from seal bore. Pull hanger to floor and remove same. Circulate bottoms up with packer fluid.

10. POOH with tubing laying down same. **NOTE: Ensure well does not flow due to CO_2 "back flow"! Well condition is to be over-balanced at all times with at least 2 well control barriers in place at all times.**

    Contingency: If unable to pull seal assembly RU electric line and make cut on tubing string just above packer. Note: Cut must be made above packer at least 5-10 ft MD. Several different sizes of cutters and pipe recovery tools should be on location due to possible tight spots in tubing.

11. If successful pulling seal assembly then pick up 3 ½ or 4 ½ inch workstring and TIH with Quantum packer retrieving tools. If tubing was cut in previous step then skip this step. Latch onto Quantum packer and pull out of hole laying down same. If unable to pull Quantum pull work string out of hole and proceed to next step. Assuming tubing can be pulled with packer with no issues, run CBL or USIT to determine that there is no leakage around the wellbore above the caprock. If leakage is noted prepare cement remediation plan and execute during plugging operations. Set 9 5/8 inch cement retainer on wireline just in Eau Claire above the Mt Simon Formation (approximately 5250 feet). Trip into hole with work string and sting into cement retainer. Test backside to 750 psi for 30 minutes on chart. A successful test should have less than 10% bleed off over the 30 minute period. This will be considered a successful casing test. Establish injection with packer kill fluid at 0.5, 1, and 2 BPM not to exceed 2,000 psi injection pressure. Sting out of retainer.

12. With pipe stung out of retainer, Mix and pump 300 (63 bbls) sacks of Class "H" cement mixed at 15.6 ppg plus fluid loss additive as proposed by cementing company and actual downhole conditions (temperature, BHP, etc). Obtain fluid loss of less than 100 cc/30 min. Follow that with 500 (105 bbls) sacks Class H cement mixed at 15.6 ppg with dispersant. Circulate to within 5 bbls of end of work/tubing string, sting into retainer and finish mixing cement. Displace tubing and squeeze away 30 bbls of cement into the open perforations.. Note: Do not squeeze at higher pressures than 2,000 psi. Sting out of retainer and reverse out a minimum of 2 pipe volumes. **Note: Leave cement on top of retainer.**

13. POOH racking back work string. Shut down for 12 hours Go in hole (GIH) open ended. Tag up on cement on top of retainer and note same.

14. Circ well and ensure well is in balance. Place tubing just above cement top from previous day. Mix and spot 500 ft balanced plug in 9 5/8 inch casing (approximately 175 sacks Class A or H). Pull out of plug and reverse circulate tubing. Repeat this operation until a total of 10 plugs have been set. If plugs are well balanced then the reverse circulation step can be omitted until after each third plug. Lay down work string while pulling from well. If rig is working daylights only then pull 10 stands and rack back in derrick and reverse tubing before shutting down for night. The following morning trip back in hole and tag plug and continue. After ten plugs have been set pull tubing from well and shut in for 12 hours. Trip in hole with tubing and tag cement top. Calculate volume for final plug. Pull tubing back out of well. Nipple down BOPs and cut all casing strings below plow line (min 3 feet below

ground level or per local policies/standards and ADM requirements). Trip in well and set final cement plug. Total of approximately 2660 sacks total cement used in all plugs. Lay down all work string, etc. Rig down all equipment and move out. Clean cellar to where a plate can be welded with well name onto lowest casing string at 3 ft.

15. File all plugging forms to local state, federal and other agencies as required.

Note: utilize all local, state or federal rules relative to P&A or at least 33% plus actual volumes or as approved previously by Illinois state agency or Federal agency.

E. Cost estimate for plugging and abandonment worst case scenario

Itemized P&A Costs	During Construction	Post Construction*
a. Casing Evaluation: Mobilize equipment and crews from nearest district. Run multi-finger caliper for detailed inspection of the inner surface of the casing. Run Isolation Scanner for final condition of outer surface of casing and cement condition. Compare to baseline logs run before injection started.	N/A	$50,000
b. Evaluation of any problems discovered by the casing evaluation: Downhole video camera to get visual images of the questionable inner surfaces of the casing.	N/A	$20,000
c. Cost for repairing problems and cleanup of any groundwater or soil contamination: CO_2 as a vapor in soil would not result in contamination like a liquid. A formal "cleanup" may not be required, and the CO_2 would dissipate into the atmosphere. CO_2 into groundwater would like be the same as that in oil. For a period of time, the shallow groundwater may have a low concentration of CO_2 similar to a "flat" soft drink. With time the CO_2 will dissipate into the unsaturated soil and dissipate.	N/A	$40,000
d. Cost for cementing or other materials used to plug the well:	$37,000	$78,000
e. Cost for labor, engineering, rig time, equipment and consultants:	$157,000	$157,000

f. Cost for decontamination of equipment:	N/A	N/A
g. Cost for disposal of any equipment:	N/A	$2,000
Tubing would be sold as scrap metal and worst case cost would be trucking services only.		
h. Estimated sales tax:	$2,000	$2,000
Our review shows there is no state sales tax for this kind of work.		
i. Miscellaneous and minor contingencies (20%):	$10,000	$10,000
j. Total	$206,000	$359,000

* Post Construction cost is for 1/1/08; if the well was abandoned 30 years from now, assuming 3% annual inflation the worst case P&A would be 2.43 times greater or $873,370.

Figure 51: Plugging Volume Calculations

VOLUME CALCULATIONS

1. CAPACITIES

Determine the following capacities:

Annular capacity between drillpipe and hole (V_{ANN})	ft^3/ft and ft/bbl
Hole or casing capacity (V_{CAPOH})	ft^3/ft
Drillpipe or tubing capacity (V_{CAPDP})	ft^3/ft and bbl/ft

2. NUMBER OF SACKS OF CEMENT

Determine the number of sacks of cement required for a given length of plug (sx):

N_{SX} = L_{PLUG} X V_{CAPOH} / slurry yield

Where:

N_{SX} = number of sacks of cement, sx

L_{PLUG} = length of cement plug, ft

V_{CAPOH} = capacity of open hole or casing, ft^3/ft

Slurry yield = cement yield, ft^3/sk

3. SPACER VOLUME BEHIND SLURRY

Determine the spacer volume to be pumped behind the slurry to balance the plug (bbls):

$V_{TAILSPACER}$ = V_{ANN} X $V_{LEADSPCR}$ X V_{CAPDP}

Where:

$V_{TAILSPACER}$ = spacer volume to be pumped behind the slurry to balance the plug, bbls

V_{ANN} = annular capacity, ft/bbl

$V_{LEADSPCR}$ = spacer volume to be pumped ahead of cement plug, bbls

V_{CAPDP} = drill pipe capacity, bbl/ft

Figure 51: Plugging Volume Calculations, contd.

VOLUME CALCULATIONS, CONTINUED

4. PLUG LENGTH

Determine the plug length (ft) before the drill pipe is withdrawn (ft):

L_{PLUG} = (N_{SX} X slurry yield) / (V_{ANN} + V_{CAPDP})

Where:

L_{PLUG} = length of cement plug before the DP is withdrawn, ft

N_{SX} = number of sacks of cement, sx

Slurry yield = cement yield, ft^3/sk

V_{ANN} = annular capacity, ft^3/ft

V_{CAPDP} = drill pipe capacity, ft^3/ft

5. LENGTH OF FREEFALL IN DRILL PIPE

Determine the length of mud free fall in drill pipe (ft):

L_{FF} = TD (1 – MW)

Where:

L_{FF} = length of free fall inside the drill pipe, ft

TD = depth, ft

MW = mud density, pPG

6. DISPLACEMENT VOLUME

Determine displacement volume required to spot the plug (bbl):

V_{DISP} = [(L_{DP} – L_{PLUG} – L_{FF}) X V_{CAPDP}] – $V_{TAILSPCR}$

Where:

V_{DISP} = displacement volume required to spot cement plug, bbls

L_{DP} = length of drill pipe, ft

L_{PLUG} = length of cement plug, ft

L_{FF} = length of freefall, ft

V_{CAPDP} = drill pipe capacity, bbl/ft

$V_{TAILSPCR}$ = spacer volume to be pumped behind the slurry to balance the plug, bbls

Figure 52: Schematic of pumping the cement job using the balanced plug method.
The mottled grey is cement, the white is spacer, and the brown is mud. In the first graphic, the first spacer has already been pumped, and they are pumping in the cement. In the 2nd graphic, they have displaced most of the cement (don't want to contaminate the cement, so leave a little in pipe at this stage), pulled the end of the pipe up into the space, and are displacing the end of the cement and putting more spacer fluid in between the mud and the cement. In the 3rd graphic, they are circulating mud to clean the pipe and casing of any cement before it sets.

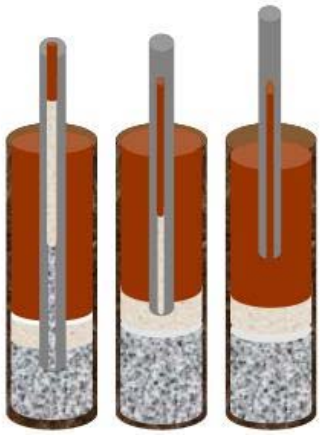

SECTION 8C - PLUGGING AND ABANDONMENT PROCEDURES GEOPHYSICAL MONITORING WELL (FORM 4G)

As the geophysical monitoring well does not penetrate the cap rock above the Mt. Simon formation, plugging and abandonment procedures will follow typical practice for well sealing.

8C.1 Description of Plugging Procedures

At the end of the serviceable life of the well, the well will be plugged and abandoned utilizing the following procedure:

1. Notify the regulatory agency of abandonment at least 24 hours prior to plugging the well.
2. Cement may be circulated from total depth or plugged-back total depth to surface or cement plugs may be placed as specified below.
    a. Cement plug circulated or dump bailed over any perforated interval (none planned).
    b. Cement plug circulated inside casing from 500' to a minimum of 250'
    c. Third possible method would be to perforate the St. Peter formation at the bottom of the 3 ½ inch tubing that is run in the well as casing.
3. Cut off all well head components and cut off all casings below ground level.
4. Finish filling well with cement.
5. Install permanent marker at surface.

UIC Form 4g, Plugging and Abandonment

ILLINOIS ENVIRONMENTAL PROTECTION AGENCY
UNDERGROUND INJECTION CONTROL PERMIT APPLICATION
FORM 4g - PLUGGING AND ABANDONMENT PROCEDURE

USEPA I.D. NUMBER ILD984791459
IEPA I.D. NUMBER 1150155136
UIC Well Number TBD

I. Description of Plugging Procedures
The plugging and abandonment design reflects minimum requirements to sustain the integrity of the caprock to ensure CO_2 remains in the Mt. Simon. Any unforeseen changes necessary to plug and abandon this well will meet or exceed these requirements in terms of strength and CO_2 compatibility.

A. Abandonment during construction

Removal of subsurface well features: There are three scenarios under which abandonment may occur during well construction (or drilling) and completion while the wellbore is open or uncased: Drilling the Surface Hole (<375 ft), Drilling Intermediate Hole (<5,300 ft), and Drilling Long-String Hole (<7,500 ft).

During all three scenarios, the drill string (drill collars, drill pipe, and drill bit) is the most likely equipment in the hole. Every attempt will be made to recover all of this equipment prior to abandonment.

If drill pipe, drill collars and/or drill bit are not retrieved and must be abandoned in the wellbore, plugs will be placed as directed by the IEPA. The same procedure will be used if any testing tool, such as a core barrel or drill stem assembly or non-radioactive well log tool is used. Plug placement will depend upon depth that equipment was lost in the well.

If a radioactive well log is lost in the hole (density and/neutron porosity), current Nuclear Regulatory Commission (NRC) regulations will be followed. A 300 ft, red cement plug will be placed immediately above the lost logging tool. An angled, kick-plate will be placed above this plug to divert any subsequent drilling that may coincidentally enter this wellbore. Current NRC regulations require that the surface casing remain extended above the ground surface with an informative groundplate welded to the pipe. The plate includes information about the well to identify what is in the hole.

Plug Placement Method: The method of placing the plugs is the **Balanced Plug** method (Figure 6). This is a basic plug spotting process that is generally considered more efficient and is consistent with best industry practices.

B. Abandonment at end of project

Removal of subsurface well features:

Casing: All casing used in this well will be cemented to surface and will not be retrievable at abandonment after injection.

Tubing and Packers: The Westbay packers will be deflated and the tubing string removed. If the packers cannot be released and removed from the cased hole, a determination will be made as to where in the well the pipe is stuck and an electric line with tubing cutter will be used to cutoff the tubing above the lowest stuck packer.

Plug Placement Method: The **Balanced Plug** placement method will be used. This is a basic plug spotting process that is generally considered more efficient and is consistent with best industry practices.

C. Type and quantity of plugging materials, depth intervals

In addition to the proper volumes, placement of plugs on depths approved by the IEPA (the minimum requirements), all cement will be previously tested in the lab, a Schlumberger CemCADE will be performed using actual well information such as actual depth, temperature on bottom, hole conditions. During the plugging operations, both wet and dry samples will be collected for each plug spotted to ensure quality of the plug.

All casing will be cemented to surface and no casing will be retrieved. From the surface, at least 3 feet of all the casing strings will be cutoff well below the plow line and a blanking plate with the required permit information will be welded to the top of the cutoff casing.

D. Detailed plugging and abandonment procedures

Notifications, Permits, and Inspections (Prior to Workover or Rig Movement)

Notifications, Permits, and Inspections are the same for plug and abandonment during construction and post-injection.

1. Notify Illinois EPA 48 hours prior to commencing operations. Insure proper notifications have been given to all regulatory agencies for rig move.
2. Make sure all permits to P&A have been duly executed by all local, State & Federal agencies and ADM has written permission to proceed with planned ultimate P&A procedure.
3. Ensure in advance that a pre-site inspection has been performed and the rig company has visited the site and is capable of transporting rig, tanks, and ancillary equipment to perform P&A operations. Notify all key third parties of expected work scope, and ensure third party contracts for work are in place prior to move in.
4. Have copies of all government permits prior to initiating operations and maintain on location at all times. Check to see if conditions of approval have been met.

5. Make sure all operations have been planned and are carried out in such a manner that meets appropriate standards.

Table 8: Plugging & Abandonment Contact List

Name	Department/ Position	Office	After Hours
Paul Hughes, Jr., P.E.	Schlumberger-Operations	281-765-5010	832-715-9060
Robert J. Finley	ISGS Project Management	217-244-8389	217-649-1744
Tom Stone	ADM Project Engineer	217-424-5897	217-424-5200
Mark Carroll	ADM Environmental Coordinator	217-451-2720	217-424-5200

Volume Calculations

Estimated volumes will be calculated for specific abandonment wellbore environment based on desired plug diameter and length required. Volume calculations are the same for plug and abandonment during construction and post-injection.

1. Choose the following:
   a. Length of the cement plug desired.
   b. Desired setting depth of base of plug.
   c. Amount of spacer to be pumped ahead of the slurry.

2. Determine the following:
   a. Number of sacks of cement required.
   b. Volume of spacer to be pumped behind the slurry to balance the plug.
   c. Plug length before the pipe is withdrawn.
   d. Length of mud freefall in drill pipe.
   e. Displacement volume required to spot the plug.

3. See generic calculations in Figure 7. Have cementer and wellsite supervisor both review calculations prior to spotting any plug.

Note: For each cementing operation the cementer and the wellsite supervisor will verify via a cementing handbook or iHandbook all calculations and have ADM approve the manner and procedure for cementing operations. Any amendments to the plugging program will require an exemption approved in writing from the Project Manager.

Plugging and Abandonment Procedure for "During Construction" Scenario:

Possible Pumping Scenario for the Cement Job (see figure 6)

1. Trip in Hole (TIH) to the desired depth (drill pipe tags the base of the desired plug depth).
2. Shut down circulating trip tank on wellbore.
3. Break circulation and condition mud as required. Circulate at least until the pit levels stabilize.
4. Mix and pump cement and spacers.
5. Displace with the predetermined mud volume.
6. Shut down cementing unit and allow mud to freefall.
7. Near the end of the freefall, begin pulling out. Check to verify if we are pulling dry or wet.

Pulling Out of the Plug

8. Resume circulating trip tank on the wellbore. Slowly pull the drillstring out of the plug and continue trip out of hole (TOH) until 2–3 stands above the top of the plug. Slowly pump 5–10 bbls to clear the drill pipe. Run circulating trip tanks continuously.
9. Do not attempt to reverse circulate because of potential contamination of the cement plug and to avoid over-pressuring the wellbore annulus. TOH.
10. Wait on cement (WOC) minimum 12 hours, make up bottom hole assembly (BHA) and TIH to tag plug and record same. If tag will hold 5–10K lbs weight, pull up, circulate 1–2 stands above and continue with next balanced plug (either in open hole or inside casing) to properly comply with all local, state and federal regulations governing P&A operations.
11. After spotting all plugs, pull out of hole (POOH) laying down all drill pipe and drill collars, break out BHA
12. Finish cutting off below plow line (or per local, state or regulatory guidelines) all casing, dump 2–5 sacks of G cement in surface hole below plow line and weld plate on top of casing stub. Place marker if required by agency(ies).
13. After rig is released, commence with site restoration per local, state or federal guidelines.
14. Complete plugging forms and send in with charts and all lab information to all state, local or federal agencies, as is required.

Possible Plugging and Abandonment Procedure for "End of Project" Scenario:

At the end of the serviceable life of the verification well, the well will be plugged and abandoned. In summary, the plugging procedure will consist of removing all components of the completion system and then spotting cement plugs along the entire length of the well. At the surface the well head will be removed and casing cut off 3 feet below surface. A detailed procedure follows:

1. Move in workover unit with pump and tank.
2. Fill both tubing and annulus with kill weight brine.
3. Nipple down well head and nipple up BOPs
4. Remove all downhole equipment from well
5. Keep hole full with workover brine of sufficient density to maintain well control
6. Pick up 2 7/8" tbg work string (or comparable) and trip in hole to PBTD
7. Circulate hole two revolutions to ensure that uniform density fluid is in the well
8. Start setting cement plugs by spotting 56 sacks Class A cement with 1% TIC. This amount is equal to 500 ft in the 5 ½" casing. Pull 10 stands (20 joints) tbg and reverse circulate hole for two tbg volumes. Lay down tubing as it is pulled from well.
9. Repeat plug setting procedure until uppermost set of perforations is covered. Reverse circulate hole one revolution.
10. Pull ten stands and shut down overnight.
11. On the next morning TIH ten stands and tag plug. Resume plugging procedure as before and continue spotting plugs until the last plug at the surface. Repeat until last plug at surface and spot the appropriate volume of cement to reach surface.
12. Nipple down BOPs
13. Cut off all well head components and cut off all casings at below ground level.
14. Finish filling well with cement.
15. Install permanent marker back to surface on which all pertinent well information is inscribed.
16. Fill cellar with topsoil.
17. Rig down workover unit and move out all equipment. Haul off all workover fluids to proper disposal site.
18. Reclaim surface to normal grade and reseed location.

7,500 ft 5 ½" 15.5 #/ft casing requires 850 sks cement to fill, 25 plugs (estimated)

Approximately five days required from move in to move out, depending on the operations at hand and the physical constraints of the well, weather, etc..

Figure 6. Schematic of pumping the cement job using the balanced plug method. The mottled grey is cement, the white is spacer, and the brown is mud. In the first graphic, the first spacer has already been pumped, and they are pumping in the cement. In the 2nd graphic, they have displaced most of the cement (don't want to contaminate the cement, so leave a little in pipe at this stage), pulled the end of the pipe up into the space, and are displacing the end of the cement and putting more spacer fluid in between the mud and the cement. In the 3rd graphic, they are circulating mud to clean the pipe and casing of any cement before it sets.

V. Estimated 2009 Cost estimate for plugging and abandonment worst case scenario

Itemized P&A Costs	During Construction	Post Construction*
a. Casing Evaluation:	N/A	$50,000
Mobilize equipment and crews from nearest district. Run multi-finger caliper for detailed inspection of the inner surface of the casing. Run Isolation Scanner for final condition of outer surface of casing and cement condition. Compare to baseline logs run before injection started.		
b. Evaluation of any problems discovered by the casing evaluation:	N/A	$20,000
Downhole video camera to get visual images of the questionable inner surfaces of the casing		
c. Cost for repairing problems and cleanup of any groundwater or soil contamination:	N/A	$40,000
CO_2 as a vapor in soil will not result in contamination like a liquid. A formal "cleanup" may not be required, and the CO_2 will dissipate into the atmosphere.		
CO_2 into groundwater will like be the same as that in oil. For a period of time, the shallow groundwater may have a low concentration of CO_2 similar to a "flat" soft drink. With time the CO_2 will dissipate into the unsaturated soil and dissipate.		
d. Cost for cementing or other materials used to plug the well:	$37,000	$37,000
e. Cost for labor, engineering, rig time, equipment and consultants:	$157,000	$157,000
f. Cost for decontamination of equipment:	N/A	N/A
g. Cost for disposal of any equipment:	N/A	$2,000
Tubing will be sold as scrap metal and worst case cost will be trucking services only.		
h. Estimated sales tax:	$2,000	$2,000
Our review shows there is no state sales tax for this kind of work.		
i. Miscellaneous and minor contingencies (20%):	$10,000	$10,000
j. Total	$206,000	$318,000

*Post Construction cost is for 1/1/10; if the well was abandoned 30 years from now, assuming 3% annual inflation the worst case P&A would be 2.43 times greater or $772,740.

Figure 7. Plugging Volume Calculations.

VOLUME CALCULATIONS

1. CAPACITIES

Determine the following capacities:

Annular capacity between drillpipe and hole (V_{ANN})	ft^3/ft and ft/bbl
Hole or casing capacity (V_{CAPOH})	ft^3/ft
Drillpipe or tubing capacity (V_{CAPDP})	ft^3/ft and bbl/ft

2. NUMBER OF SACKS OF CEMENT

Determine the number of sacks of cement required for a given length of plug (sx):

N_{SX} = L_{PLUG} X V_{CAPOH} / slurry yield

Where:

N_{SX} = number of sacks of cement, sx

L_{PLUG} = length of cement plug, ft

V_{CAPOH} = capacity of open hole or casing, ft^3/ft

Slurry yield = cement yield, ft^3/sk

3. SPACER VOLUME BEHIND SLURRY

Determine the spacer volume to be pumped behind the slurry to balance the plug (bbls):

$V_{TAILSPACER}$ = V_{ANN} X $V_{LEADSPCR}$ X V_{CAPDP}

Where:

$V_{TAILSPACER}$ = spacer volume to be pumped behind the slurry to balance the plug, bbls

V_{ANN} = annular capacity, ft/bbl

$V_{LEADSPCR}$ = spacer volume to be pumped ahead of cement plug, bbls

V_{CAPDP} = drill pipe capacity, bbl/ft

Figure 7. Plugging Volume Calculations, cont.

VOLUME CALCULATIONS, CONTINUED

4. PLUG LENGTH

Determine the plug length (ft) before the drill pipe is withdrawn (ft):

L_{PLUG} = (N_{SX} X slurry yield) / (V_{ANN} + V_{CAPDP})

Where:

L_{PLUG} = length of cement plug before the DP is withdrawn, ft

N_{SX} = number of sacks of cement, sx

Slurry yield = cement yield, ft^3/sk

V_{ANN} = annular capacity, ft^3/ft

V_{CAPDP} = drill pipe capacity, ft^3/ft

5. LENGTH OF FREEFALL IN DRILL PIPE

Determine the length of mud free fall in drill pipe (ft):

L_{FF} = TD (1 – MW)

Where:

L_{FF} = length of free fall inside the drill pipe, ft

TD = depth, ft

MW = mud density, pPG

6. DISPLACEMENT VOLUME

Determine displacement volume required to spot the plug (bbl):

V_{DSP} = [(L_{DP} – L_{PLUG} – L_{FF}) X V_{CAPDP}] – $V_{TAILSPCR}$

Where:

V_{DSP} = displacement volume required to spot cement plug, bbls

L_{DP} = length of drill pipe, ft

L_{PLUG} = length of cement plug, ft

L_{FF} = length of freefall, ft

V_{CAPDP} = drill pipe capacity, bbl/ft

$V_{TAILSPCR}$ = **spacer volume to be pumped behind the slurry to balance the plug, bbls**

END

This page intentionally left blank

Appendix I: IEPA UIC Permit

ILLINOIS ENVIRONMENTAL PROTECTION AGENCY

1021 NORTH GRAND AVENUE EAST, P.O. BOX 19276, SPRINGFIELD, ILLINOIS 62794-9276 • (217) 782-2829

PAT QUINN, GOVERNOR JOHN J. KIM, INTERIM DIRECTOR

217/524-3300

November 8, 2012

CERTIFED MAIL
7009 3410 0002 3749 6922

Archer Daniels Midland Company
Attn: Mark Burau, Decatur Corn Plant Manager
4666 Faries Parkway
Decatur, Illinois 62526

Original / MBS
11/12/12

Re: 1150155136 -- Macon County
ADM Company
ILD984791459
Permit No. UIC-012-ADM
Log No. UIC-143-M-5
Well No. CCS #1
UIC Administrative Record File
Permit Approval

Dear Mr. Burau:

Enclosed is a modified Underground Injection Control (UIC) permit authorizing Archer Daniels Midland Company's ("ADM") to operate of a Class I non-hazardous carbon dioxide sequestration injection well system. The permit was modified in response to AMD's modification request, dated March 20, 2012 and received by the Illinois EPA on March 27, 2012. This modification has been processed as a minor modification pursuant to 35 Ill. Adm. Code 704.264.

This permit modification requested corrections to the injection flow rates and other typographical errors present in the permit language. Other errors identified by the Illinois EPA during our review of the permit have also been corrected. The permit conditions that have been modified under this action are identified in Attachment 1 of this letter.

This permit modification request is hereby approved subject to the conditions contained in the attached UIC permit. A detailed list of all documents and approved permit modification request associated with this permit is contained in Attachment J of the permit. Read this document carefully. Failure to meet any portion of the permit could result in civil and/or criminal penalties.

N. Main St., Rockford, IL 61103 (815)987-7760
State, Elgin, IL 60123 (847)608-3131
First St., Champaign, IL 61820 (217)278-5800
il St., Collinsville, IL 62234 (618)346-5120

9511 Harrison St., Des Plaines, IL 60016 (847)294-4000
5407 N. University St., Arbor 113, Peoria, IL 61614 (309)693-5462
2309 W. Main St., Suite 116, Marion, IL 62959 (618)993-7200
100 W. Randolph, Suite 11-300, Chicago, IL 60601 (312)814-6026

PLEASE PRINT ON RECYCLED PAPER

Work required by this letter, your submittal or the regulation may also be subject to other laws governing professional services, such as the Illinois Professional Land Surveyor Act of 1989, the Professional Engineering Practice Act of 1989, the Professional Geologist Licensing Act, and the Structural Engineering Licensing Act of 1989. This letter does not relieve anyone from compliance with these laws and the regulations adopted pursuant to these laws. All work that falls within the scope and definitions of these laws must be performed in compliance with them. The Illinois EPA may refer any discovered violation of these laws to the appropriate regulating authority.

If you have any questions regarding matters related to this permit, please contact Kevin Lesko at 217/524-3271.

Sincerely,

Stephen F. Nightingale, P.E.
Manager, Permit Section
Bureau of Land

SFN:KL:kl\1150155136-UIC-UIC143M5.docx

Attachments: Attachment 1 - Scope of Modification
Underground Injection Control Permit

cc: Dean Frommelt, Division Environmental Manager -- ADM
Sallie Greenburg -- Illinois State Geological Survey
Robert Finley -- Illinois State Geological Survey

ATTACHMENT 1

SCOPE OF MODIFICATION

Log No. UIC-143-M-5

1150155136 -- Macon County
ADM Company
ILD984791459
Permit No. UIC-012-ADM
Well No. CCS #1

The following is a list of the permit conditions that have been modified in response to permit modification request Log No. UIC-143-M-5:

Condition B.1(b) – Modified as requested to reflect the correct flow rate limits for each orifice size:

FIT-006 Orifice Size	Flow Rate Limit (mm/max)
1.5 inch	13,009 -45,870 lbs/hr
1.75 inch	19,519 - 63,252 lbs/hr
2.25 inch	31,069 - 109,477 lbs/hr

Condition B.1(b) – The reference to Condition B.6(c) (Monthly Reports) in the last sentence of this condition was not correct. The condition was modified to refer to Condition B.6(b).

OTHER TYPOGRAPHICAL ERRORS

The following are the additional typographical errors that were identified and corrected by the Illinois EPA:

Condition A.4.c – Changed depth of longstring casing to referenced to depth below ground surface rather than wireline depth below Kelly Bushing.

Condition B.4.b.iv – The reference to Condition B.7 was not correct. The condition was modified to refer to Condition B.6.d.viii.

Condition I.8 – Corrected spelling of 'Permittee' in first sentence.

Attachment B - Well Diagrams - Injection Well Schematic, left column, depths for casings changed from, depth below Kelly Bushing (KB) to depth below ground surface.

Attachment B - Well Diagrams - Verification Well #1 Schematic

- Corrected Bottom Depth of Top Section of the Long String Casings;
- Corrected Top Depth of Bottom Section of the Long String Casings;
- Depths for Westbay Packers labels P2 to P10 incorrect, label for P11 missing, corrected depths for P2 to P11.

Attachment C - Procedure For Calculating Average Values – Corrected spelling of 'Calendar' in item 4.

Attachment J - Approved Permit Application – Added November 1, 2011document CCS1 & VM1 Well MIT Report to list.

SFN:KL:kl\1150155136-UIC-UIC143M5.docx

ILLINOIS ENVIRONMENTAL PROTECTION AGENCY

1021 NORTH GRAND AVENUE EAST, P.O. BOX 19276, SPRINGFIELD, ILLINOIS 62794-9276 • (217) 782-2829

PAT QUINN, GOVERNOR JOHN J. KIM, INTERIM DIRECTOR

217/524-3300

Non-Hazardous Class I Well
Underground Injection Control Permit

Archer Daniel Midland Company (ADM)
Attn: Mark Burau, Decatur Corn Plant Manager
4666 Faries Parkway
Decatur, Illinois 62526

Re: 1150155136 -- Macon County
ADM, Company
ILD984791459
Permit No. UIC-012-ADM
Log No. UIC-143-M-5
Well No. CCS #1
UIC Administrative Record File

Issue Date: December 23, 2008
Effective Date: January 27, 2009
Expiration Date: December 23, 2018
Modification Date: November 8, 2012

A modified Underground Injection Well permit is hereby granted pursuant to the Illinois Environmental Protection Act and Title 35 Illinois Administrative Code (Ill. Adm. Code) Parts 702, 704, 705, and 730 to Archer Daniel Midland Company (ADM) to operate and maintain a non-hazardous waste Class I Underground Injection Control (UIC) well, known as Carbon Capture Sequestration Well No. 1 (CCS1), for the injection of supercritical carbon dioxide. The permitted well is located 438 feet South and 1332 feet East of the Northwest corner of the Northwest quarter of Section 5, Township 16 North, Range 3 East, Macon County, Illinois.

This permit consists of the conditions contained herein (including those in any attachments and appendices) and applicable regulations contained in the Illinois Environmental Protection Act and Title 35 Ill. Adm. Code Parts 702, 704, 705 and 730. The Environmental Protection Act 415 ILCS 5/1 et seq. (formerly Ill. Rev. Stat., Chapter 111 1/2, Section 1039) grants the Illinois Environmental Protection Agency the authority to impose conditions on permits which it issues.

This permit is issued based on the information submitted in the permit application identified in Attachment J, and any subsequent amendments (hereafter referred to as the approved permit application). Any inaccuracies found in this information may be grounds for the termination of modification of this permit (see 35 Ill. Adm. Code 702.187 and 702.186) and potential enforcement action.

If you have any questions regarding this permit, please contact Kevin Lesko at 217/524-3271.

Sincerely,

Stephen F. Nightingale, P.E.
Manager, Permit Section
Bureau of Land

SFN:KL:kl\1150155136-UIC-UIC143M5.docx

4302 N. Main St., Rockford, IL 61103 (815)987-7760
595 S. State, Elgin, IL 60123 (847)608-3131
2125 S. First St., Champaign, IL 61820 (217)278-5800
2009 Mall St., Collinsville, IL 62234 (618)346-5120

9511 Harrison St., Des Plaines, IL 60016 (847)294-4000
5407 N. University St., Arbor 113, Peoria, IL 61614 (309)693-5462
2309 W. Main St., Suite 116, Marion, IL 62959 (618)993-7200
100 W. Randolph, Suite 11-300, Chicago, IL 60601 (312)814-6026

PLEASE PRINT ON RECYCLED PAPER

TABLE OF CONTENTS

Page No.

A. WELL SPECIFICATIONS 1
1. Well Location 1
2. Application and Plans 1
3. Wellhead 1
4. Casing and Cementing 1
5. Tubing and Packer Specifications 1
6. Injection and Confining Layers 2
7. Injection Zone Verification Wells 2
8. Geophone Monitoring Well 2
9. Mechanical Gauges for Injection and Verification Wells 3

B. OPERATING, MONITORING, AND REPORTING REQUIREMENTS 3
1. Operating Requirements 3
2. Monitoring Requirements 5
3. Material Analysis Plan 6
4. Injection Zone Verification Wells 7
5. Ambient Monitoring 13
6. Monthly Reporting Requirements 13
7. Geophone Monitoring Well 17

C. EFFECT OF PERMIT 17

D. PERMIT ACTIONS 18

E. SEVERABILITY 18

F. CONFIDENTIALITY 18

G. PENALTIES FOR VIOLATION OF PERMIT 18

H. DUTIES AND REQUIREMENTS 18
1. Duty to Comply 18
2. Duty to Reapply 19
3. Need to Halt or Reduce Activity 19
4. Duty to Mitigate 19
5. Proper Operation and Maintenance 19
6. Property Rights 19
7. Duty to Provide Information 19
8. Inspection and Entry 19
9. Monitoring 20
10. Records 20
11. Signatory Requirements 21

Page No.

12. Reporting Requirements 21
13. Corrective Action Requirements....21
14. Twenty-four Hour Reporting 22
15. Transfer of Permit 23
16. Financial Responsibility....23
17. Cost Estimate for Plugging and Abandonment....24
18. Insolvency of Financial Institutions....25
19. Revocation of Permits....25
20. State Mining Board Permits....26
21. False or Omitted Information....26
22. Restriction on Unpermitted Waste....26
23. Plugging and Abandonment....26
24. Conversion of Wells 27
25. Inactive Wells 27
26. Duty to Establish and Maintain Mechanical Integrity 28
27. Contingency Plan 30
28. 39i Certification 31
29. Future Regulations 31
30. Permit Modifications 31
31. Future Injection Wells....32

I. GROUNDWATER MONITORING....33

1. Summary....33
2. Definitions 33
3. Implementation....33
4. Well Locations and Construction 34
5. Monitoring Parameters 35
6. Monitoring Program 36
7. Groundwater Elevation....37
8. Sampling and Analytical Procedures....37
9. Statistical Procedures....38
10. Reporting and Recordkeeping 38
11. Request for Permit Modification 40

ATTACHMENT A. PROCEDURE USED FOR MECHANICAL INTEGRITY 42
ATTACHMENT B. WELL DIAGRAMS.... 45
ATTACHMENT C. PROCEDURE FOR CALCULATING AVERAGE VALUES 51
ATTACHMENT D. SUMMARY OF SUBMITTAL DATES.... 54
ATTACHMENT E. WELL COMPLETION REPORT (UIC Form 4h).... 57
ATTACHMENT F. GROUNDWATER MONITORING WELL ATTACHMENTS 61
ATTACHMENT G. ELECTRONIC GROUNDWATER SUBMITTAL 65
ATTACHMENT H. PROCEDURE FOR WELL OR EQUIPMENT FAILURE.... 69
ATTACHMENT I. FIELD LOG – INJECTION/VERIFICATION WELLS 73
ATTACHMENT J. APPROVED PERMIT APPLICATION 75

A. WELL SPECIFICATIONS

1. Well Location. Carbon Capture Sequestration Well 1 (CCS1) is located 438 feet South and 1332 East of the Northwest corner of the Northwest quarter of Section 5, Township 16N, Range 3E, Macon County, Illinois. The surface elevation is 674 feet above mean sea level (MSL). The approximate completed depth of the well is at 7,221 feet or 6,547 feet below MSL, extending approximately 185 feet into the Precambrian granite.

2. Application and Plans. Construction and operation of the injection well and associated monitoring systems, shall be conducted in accordance with the terms and conditions of this permit, the approved permit application, and subsequent approved modifications as identified in Attachment J.

3. Wellhead. The wellhead assembly shall be rated to a minimum of 3,000 psi working pressure. Components of the wellhead that are in contact with the injection stream shall be constructed of schedule 310 or 410 stainless steel. A wellhead assembly diagram is provided in Attachment B of this permit.

4. Casing and Cementing (35 Ill. Adm. Code 730.112(b)). An injection well diagram is provided in Attachment B of this permit. The casing and cement design specifications used in the construction of the well are as follows:

   a. Surface Casing (Carbon steel, Grade H-40, OD (outer diameter) 20 in.) The surface casing was set and cemented at a subsurface depth of 340 feet. Cementing was accomplished in two sections; (Lead) Class A, 58 cubic yards (c.y.) and (Tail) Class A 38.67 c.y.

   b. Intermediate Casing (Carbon steel, Grade J-55, OD 13.375 in.). The intermediate casing was set and cemented at a subsurface depth of 5324 feet. Cementing was completed in two stages with the first stage using a Class H cement and the second stage using a 65/35 Class A Pozzolan system with 4% bentonite and 10% salt with 5 lbs/sack Kolite mix.

   c. Long string Casing (Top Section; Carbon steel, Grade N-80, OD 9.625 in.) (Bottom Section; Carbon steel, Grade L-80, and Chrome steel, 13Cr80, OD 9.625 in.) The longstring casing was set and cemented at a subsurface depth of 7204 feet. Cementing was completed in two sections: lead section from 0-4170 ft. (35/65 LP3:A, pozzolan/cement blend), and a tail section from 4170-7219 ft. (EverCRETE).

5. Tubing and Packer Specifications. Injection shall be through the 4-1/2 inch OD, 12.6 ppf, 13CR85 tubing and packer assembly. The tubing extends from the wellhead to 6348 feet below ground surface and attaches to the packer assembly. The packer is a

Schlumberger brand Quantum Max Type III Service Tool, Q-Max 13 Chrome. The top of the packer is set at depth of 6348.7 feet with the center of the sealing elements at 6350 feet. The end of the packer assembly is at 6399 feet below ground surface. Any changes in the tubing and packer material and design shall be submitted to the Permit Section, Division of Land Pollution Control for approval at least 30 days prior to installation. (35 Ill. Adm. Code 730.112(c))

6. Injection and Confining Layers. Carbon dioxide will be injected into the Mt. Simon sandstone formation. The Mt. Simon formation is a saline brine aquifer that is present from approximately 5,530 to 7,036 feet below ground surface at the well site. Carbon dioxide will be injected into this formation through perforations in the long string casing that are located at 6,962 – 6,963 feet below ground surface; 6,967 – 6,997 feet below ground surface; and 7,010.5 – 7,035.5 feet below ground surface.

   Above the Mt. Simon formation is the Eau Claire formation that is present from approximately 5,032 to 5,530 feet below ground surface at the well site. The Eau Claire formation serves as the confining layer for the carbon dioxide that is injected into the lower Mt. Simon formation. The Eau Claire formation is made up of shale, and is approximately 498 feet thick at the injection well site.

7. Injection Zone Verification Wells. The injection zone verification well allows for the monitoring of formation fluids at various levels within the injection zone, and within the Potosi and Ironton aquifers present immediately above the Eau Claire confining layer. This allows monitoring of the chemical composition, pressure and temperature of the formation fluids within multiple formations.

   a. The Permittee has installed one injection zone verification well located approximately 1045 feet north of the injection well in accordance with the Well Completion Report submitted and approved in this permit modification, Log# UIC-143-M-3, identified in Attachment J.

   b. The Permittee may install one additional injection zone verification well ("Verification Wells") in accordance with the plans, specifications and methods descried the permit modification application, Log # UIC143-M-2, identified in Attachment J. The Verification Well shall be located within the area identified in Part 2, Figure 1 (page 7 of 44) of the permit modification application, Log # UIC143-M-2.

8. Geophone Monitoring Well. The Permittee has installed a Geophone Monitoring Well in accordance with the Well Completion Report submitted and approved in this permit modification, Log # UIC143-M-3, identified in Attachment J. This monitoring well allows for the collection of data from the subsurface, near the injection well, when seismic surveys are conducted.

9. Mechanical Gauges for Injection and Verification Wells. Mechanical gauges located on the injection and verification wellheads shall be read to provide continuous monitoring in the event of a power outage that affects the ability of each well's electronic gauges to gather and report data. Within 30 days of issuance of this permit, the Permittee shall provide a report identifying the location, ADM tag number, manufacturer name, model, and specifications for the mechanical gauges already present at each well that will read in place of the electronic gauges identified below:

   a. Mechanical backup gauges for the following electronic gauges located on the Injection Well shall be provided:

      i. Injection pressure gauge – Surface injection pressure gauge – PIT-009, and

      ii. Annular pressure gauge – PIT-014

   b. Mechanical backup gauges for the following electronic gauges located on the Verification Well shall be provided:

      i. Surface pressure gauge for Westbay tubing string – PIT-201, and

      ii. Annular pressure gauge – PIT-202.

   The gauges must be able to display events which exceed maximum permitted and minimum operating parameters by a minimum of 20%. Each gauge shall have an appropriate scale that will allow readings to be discerned at the lower and higher end of the operational limits required by the permit.

   The Permittee shall also include in the above report a revised Attachment I, "Field Log – Injection/Verification Wells" of this permit to include provisions for recording readings of the backup mechanical gauges when necessary.

B. OPERATING, MONITORING AND REPORTING REQUIREMENTS

1. Injection Well Operating Requirements (35 Ill. Adm. Code 730.113(a), 704.185)

   a. Maximum injection pressure. The maximum injection pressure as measured at the wellhead shall be 1,950 psig. If the pressure at the wellhead reaches 1,950 psig, the injection well shall automatically be shut in. The Mt. Simon formation fracture pressure at 7,010 ft. was determined to be 5,024 psi, resulting in a fracture gradient of 0.715 psi per foot. The maximum wellhead injection pressure of 1950 psig is approximately 75% of the pressure that would cause fracturing within the injection zone. Thus, the injection of carbon dioxide into the injection zone will not cause any fracturing of that zone.

b. Injection rate. The injection rate limits are based on the capabilities of the flow rate meter (FIT-006). The maximum injection rate shall be limited to 80% of the maximum capability of the continuous recording device as required by Condition B.2(d). The injection rate shall be within the limits indicated below.

FIT-006 Orifice Size	Flow Rate Limit (mm/max)
1.5 inch	13,009 - 45,870 lbs/hr
1.75 inch	19,519 - 63,252 lbs/hr
2.25 inch	31,069 - 109,477 lbs/hr

The flow rate limits above apply to the injection of carbon dioxide except during startup, testing and shutdown periods. The Permittee shall report changes to the flow rate meter FIT-006 in accordance with Condition B.6(b).

c. Maximum injection mass. The maximum daily injection shall not exceed 1,200 metric tonnes/day. The maximum total amount of supercritical carbon dioxide that may be injected under this permit is 1.0 million metric tonnes.

d. Injection Fluid Parameters. The injected carbon dioxide shall be within the limits indicated below during injection.

Parameters	Limits
Temperature*	60 - 150°F
Phase**	Supercritical

* - As measured near the wellhead.
** - At the point of injection.

The limits above for temperature and the phase of the injection fluid apply to the injection of carbon dioxide except during startup, testing and shutdown periods. Other fluids may be injected for short periods for purposes of well testing, well stimulation and for the purposes of formation testing. The Permittee shall provide notice to the Illinois EPA of these tests in accordance with Condition H.26(e).

e. Annulus Protection. The following procedures will be used to limit the potential for any unpermitted fluid movement into or out of the annulus:

i. The annulus between the tubing and the long string casing is filled with 9.4 lb/gal sodium-chloride brine with corrosion inhibitor and oxygen scavenger additives. The annular fluid will have a specific gravity of 1.104 and a hydrostatic coefficient of 0.478 psi per foot.

ii. The annulus will be kept at a minimum of 400 pounds per square inch (psi) at all times as measured at the wellhead.

iii. The pressure within the annular space, over the interval above the packer to the bottom of the confining layer, shall be greater than the pressure of the injection zone formation at all times.

iv. Any changes to the composition of annular fluid shall be reported in the next monthly report submitted to the Permit Section, Division of Land Pollution Control.

v. A pressure differential of at least 100 psi between the tubing and annular space, from the packer to the bottom of the confining layer, shall be maintained during injection of fluid.

f. Annulus injection prohibition. Injection between the outer most casing protecting underground sources of drinking water and the well bore is prohibited.

g. Prohibition of excessive pressure. The Permittee shall not use excessive injection pressure or volumes and cause:

i. new fractures or propagation of existing fractures in the injection zone,

ii. initiation of fractures in the confining zone,

iii. migration of injected fluids into any underground source of drinking water,

iv. displacement of formation fluid into any underground source of drinking water, or

v. non-compliance with 35 Ill. Adm. Code 730 operating requirements.

2. Monitoring Requirements for the Injection Well (35 Ill. Adm. Code 730.113(b))

a. Sampling. Grab samples of the injection fluid shall be collected in accordance with Condition B.3.

b. Continuous recording devices. The following continuous recording devices or their equivalents shall be installed and used to monitor the injection pressure, flow rate, temperature, and annulus pressure:

i. Injection pressure gauges – Surface injection pressure gauge – PIT-009, ABB/264HSVKTA1, 0-2440 (psig), continuous recording

ii. Annular pressure gauge – PIT-014, ABB/ 624EGS21030G811, 0-1000 (psig), continuous recording

iii. Flow meter – FIT-006, SCADASense/4203 (with an orifice size of 1.5, 1.75, or 2.25 inches), 13,009-96,672.8 (lb/hr), continuous recording

iv. Temperature gauges – Surface temperature gauge- TIT-009, Rosemount, 3144PD1A1E5M5Q4XA 0-180 (degF), continuous recording

c. In the event of a failure of the continuous monitoring system, injection into the injection well shall cease and manual field readings shall be obtained from the gauges identified in Attachment I, "Field Log – Injection/Verification Wells", of this permit. The manual reading shall be recorded on the "Field Log – Injection/Verification Wells." The initial readings shall be obtained within 30 minutes of the failure and every four (4) hours afterword until the continuous monitoring system is restored. Copies of the log(s) and a report regarding the maintenance performed to correct the failure shall be provided with the monthly report as required in Condition B.6. Injection shall not resume until such time as all components of the continuous monitoring system are operating properly.

d. Recording device ranges. All recording devices must be able to record events which exceed maximum permitted operating parameters by a minimum of 20%.

e. Corrosion Monitoring. The Permittee shall implement the corrosion monitoring system for the injection well in accordance with the plans, specifications and methods described in the permit modification application, Log # UIC143-M-2, identified in Attachment J.

3. Material Analysis Plan (35 IAC 704.187). The Permittee shall follow the written Material Analysis Plan, Appendix F of the permit application, as modified by this permit. A copy of the plan shall be kept at the facility. The Permittee shall collect and analyze the injection fluid in a manner consistent with US EPA publication SW-846, "Test Methods for Evaluating Solid Waste, Physical/Chemical Methods".

The Permittee may make a written request for changes in sample collection methods; remove analytical constituents from the list of parameters to be analyzed; or request that the frequency of analysis for individual parameters be reduced. The request must include a demonstration that the change will not affect the characterization of the injection fluid which is necessary to ensure that the injection fluid can be safely injected in accordance with other requirements of this permit. Changes to the Material Analysis plan shall not be done without written authorization from the Illinois EPA.

4. Injection Zone Verification Wells Operating Requirements.

   a. Notification Requirements. The Permittee shall comply with the notification requirements of Condition H.14, if at any time the Permittee becomes aware of information which indicates that the Verification Wells, identified in Condition A.7, may endanger health, the environment, or an underground source of drinking water.

   b. Verification Well Annulus Protection. The following procedures will be used to limit the potential for any unpermitted fluid movement into or out of the annuli:

      i. The upper annulus between the Westbay tubing and the long string of casing and above the uppermost packer (Packer 28) located at 4,823.8 feet below ground surface is filled with 9.4 ppg NaCl brine with Nalco Adomite ASP 539D corrosion inhibitor at a concentration of 2 gallons per 1000 gallons brine. The annular fluid will have a specific gravity of 1.127 and a hydrostatic coefficient of 0.488 psi per foot.

      ii. The upper annulus shall be kept full at all times.

      iii. The interior of the Westbay tubing string shall be kept full at all times with fluid as described in item b(i).

      iv. Additions or removal of annulus fluid shall be recorded and reported as required by Condition B.6.d.viii.

      v. Any changes to the composition of annular fluid shall be reported in the next monthly report submitted to the Permit Section, Division of Land Pollution Control.

      vi. The QA Zone, located within the confining layer between Packer 18 and Packer 19, which extends from 5,456.6 to 5,502.4 feet below ground surface, shall be filled with 9.4 ppg NaCl brine with Nalco Adomite ASP 539D and continuously monitored for pressure and temperature.

   c. Continuous recording devices. The following continuous recording devices for the Verification Well or their equivalent shall be installed:

      i. Surface pressure gauge for Westbay tubing string – PIT-201, ABB/266GSH-U, -14.7 to 435 psig, continuous recording

      ii. Annular pressure gauge – ABB/266GSH-U – PIT-202, -14.7 to 435 psig, continuous recording

iii. Down hole pressure and temperature gauges for Westbay monitoring system – Westbay MOSDAX/2580, 0-5000 (psig) and 32-158 (degF), continuous recording. The gauges are located within the Westbay tubing string at the following depths:

Port Name	Depth (ft. below ground surface)
Port 1	7045
Port 2	6967.4
Port 3	6930
Port 4	6822.3
Port 5	6704.7
Port 6	6616.7
Port 7	6400.6
Port 8	5824.8
Port 9	5638.3
QA Zone	5467
Port 10	4986.1
Port 11	4902

d. In the event of a failure of the continuous monitoring system, injection into the injection well shall cease and manual field readings shall be obtained from the gauges identified in Attachment I, "Field Log – Injection/Verification Wells", of this permit. The manual reading shall be recorded on the "Field Log – Injection/Verification Wells." The initial readings shall be obtained within 30 minutes of the failure and every four (4) hours afterword until the continuous monitoring system is restored. Copies of the log(s) and a report regarding the maintenance performed to correct the failure shall be provided with the monthly report as required in Condition B.6.

e. Recording device ranges. All recording devices must be able to record events which exceed maximum permitted operating parameters by a minimum of 20%.

f. Test and Logs During Construction. During drilling and construction of any additional Verification Well, all test and logs listed under 35 Ill. Adm. Code 730.112(d) shall be performed and all results shall be submitted to the Agency. The Permittee shall also determine the hydrostatic gradient, static fluid levels, porosity of the formation and total dissolved solids of the formation fluids of each of the geologic formations that will be monitored by this well.

g. Verification Well Completion Report. The Permittee shall submit a Verification Well Completion Report (Attachment E) within 120 days of completion of any new Verification Well. The report should include a description of construction, including driller's log, materials used (i.e., tubing and casing tallies), cement (and other) volumes, appropriate logs and other tests conducted during the drilling and

construction. The report should also include an as-built well schematic or other appropriate drawing of surface and subsurface construction details, and a facility map on a scale of one inch equal to not greater than 200 feet identifying the location of the geophone monitoring well, the injection well, facility boundaries and other appropriate structures.

h. Duty to Establish and Maintain Mechanical Integrity for a Verification Well (35 Ill. Adm. Code 704.181(h) and 704.190) The procedures for the mechanical integrity testing shall be conducted in accordance with the conditions of this permit and the procedures located in the permit modification application, Log # UIC143-M-2, "Part 2, Verification Well Modifications," Section III. "Mechanical Integrity Tests During the Service Life of the Well," page 27a of 44.

i. The Permittee shall establish and thereafter maintain mechanical integrity as defined in 35 Ill. Adm. Code 730.108.

ii. A demonstration of mechanical integrity in accordance with the procedures of permit modification application, Log # UIC143-M-2, shall be conducted to ensure the well has integrity during the life of this permit.

A report interpreting the results of the demonstration of mechanical integrity, including a descriptive report of all geophysical logs, prepared by a qualified log analyst, shall be submitted with log analyses to the Permit Section, Division of Land Pollution Control. This report shall be signed by the analyst and shall include his/her phone number.

The descriptive report should also discuss: (1) changes in the structure of the well detected by the geophysical logging; (2) the location of defects; (3) any additional monitoring or corrective action that may be needed to assure the integrity of the well; and (4) an evaluation of the impact any defect may have on the integrity of the well and its ability to contain the injectate and protect USDWs over its operating life.

iii. During periods when the Westbay automated data logging system is removed from the Verification Well, manual measurements for fluid pressures and temperatures from all monitoring zones shall be obtained within 2 weeks of removal and every two (2) weeks thereafter until the automated data logging system is restored to operation.

iv. The Permittee shall not remove the Westbay automated data logging system for planned events, unless the well has maintained adequate mechanical integrity for the prior 30 days. This condition does not prohibit removal in order to repair components of the system that are

required to demonstrate mechanical integrity of the system or in order to restore the mechanical integrity of the Verification Well.

v. Annually the Permittee shall prepare a report on all events that required the removal of the Westbay automated logging system from the Verification Well. This report shall include:

a. Reason for removal of system;
b. Length of time that the system was removed;
c. Discussion of well integrity testing/measurements during this period; and
d. Identification and discussion of resolution of any problems encountered.

This report shall be submitted to the Permit Section, Division of Land Pollution Control on January 15 of each year.

vi. The Permittee shall demonstrate the absence of significant leaks in the upper annulus system which consists of the annulus casing above the uppermost packer (Packer 28), Westbay tubing and Westbay upper packer. A demonstration of the absence of significant leaks shall also be made for the interior of the Westbay tubing through out its entire length. The upper annulus pressure test shall be performed at a minimum annually or anytime the upper packer is unseated. The pressure test of the interior of the Westbay tubing and evaluation of the QA Zones shall be performed at a minimum annually or anytime the Westbay automated data logging system is re-installed in the Verification Well. These tests shall be conducted in accordance with the permit modification application, Log # UIC143-M-2, USEPA Region V guidance Determination Of The Mechanical Integrity Of Injection Wells – Attachment 1 (Revised June 11, 1998), and the following conditions:

a. The annular space and interior of the Westbay tubing must be completely filled with fluid.

b. The pressure tests of the annulus and the interior of the Westbay tubing shall be conducted independently.

c. When pressure testing the upper annular space and casing a positive pressure differential between the annular space and the interior of the Westbay tubing of at least 100 psi shall be maintained throughout the entire annulus above the uppermost Westbay packer (Packer 28).

d. When pressure testing the interior of the Westbay tubing a pressure differential of at least 100 psi shall be maintained between the interior of the tubing and the pressure on the exterior of the tubing throughout its entire length.

e. Measurements of pressure should be taken at a minimum of every ten minutes.

f. The well will be deemed to have failed the pressure test if a pressure change of greater than 3% occurs over a one hour period.

vii. The Permittee shall demonstrate the absence of significant fluid movement into an underground source of drinking water through vertical channels adjacent to the well bore by use of a temperature survey and a time-lapse sigma log (oxygen activation log). These tests shall be run biannually (every 24 months) in accordance with the procedures of this permit and permit modification application, Log # UIC143-M-2.

viii. The Permittee will inform the Permit Section, Division of Land Pollution Control, of its intent to conduct pressure test(s), and temperature log(s), plus any additional mechanical tests, logs, or inspections, at least thirty (30) days prior to the demonstration of mechanical integrity. The notice must include the type of test to be conducted.

Should the Permittee not be able to provide the Agency with thirty (30) days advanced notice due to unexpected events, the Permittee shall provide notification within twenty-four (24) hours of the Permittee becoming aware of the need to conduct one or more of the test, logs or inspections identified above. This twenty-four (24) hour notification shall be provided via email and\or telephone to:

Champaign Field Operations Section
E-mail: Jeff.Turner@Illinois.gov
Phone Number: 217-278-5822

Division of Land Pollution Control Permit Section
E-mail: Kevin.Lesko@Illinois.gov
Phone Number: 217-524-3271

A written submission shall also be provided to the Permit Section, Division of Land Pollution Control, within 5 days. The written submission shall contain:

a. The nature of the work to be done;

b. The reason that the work is required to be conducted without providing thirty (30) days notice; and

c. A tentative schedule of work to be performed, including an estimate of when required testing may be performed.

ix. A cement bond log must be run in the entire length of the long string casing whenever the Westbay tubing and packer system is removed from the well. If the Westbay tubing is removed more than once in a five year period, only one cement bond log shall be required.

x. An electromagnetic casing inspection log shall be run to determine the thickness, external condition, and internal condition of the long string casing for its entire length. This log shall be run when the Westbay tubing and packer system is removed from the well for the cement bond log. If the tubing is removed more than once in a five year period, only one electromagnetic log shall be required.

xi. The Permittee shall cease injection if an apparent loss of mechanical integrity as defined by 35 Ill. Adm. Code 730.108, becomes evident during operation or at the time of the mechanical integrity demonstration. Operation shall not be resumed until the Permittee has complied with the provisions of this permit, and applicable regulations, regarding mechanical integrity demonstration and testing.

xii. All gauges used in mechanical integrity demonstrations or in daily operations shall be calibrated according to the procedures of the National Bureau of Standards, initially and at least annually thereafter. A copy of the calibration certificate shall be submitted to the Permit Section, Division of Land Pollution Control on January 15 of each year. In addition, recording devices are to be time synchronized at least quarterly.

xiii. In addition to the mechanical integrity demonstration required by this permit, the Illinois EPA has the authority to require the Permittee to conduct a demonstration of mechanical integrity of the well at any time well operations, or other information, leads the Illinois EPA to decide an additional mechanical integrity demonstration is necessary. The notice requiring the mechanical integrity demonstration shall be in writing and contain justification for requiring the additional testing.

i. The Permittee shall notify the Illinois EPA ninety (90) days prior to the planned installation of the second Verification Well. This notification shall include the location of the well. The Permittee shall also provide a demonstration of adequate financial resource in accordance with condition H.16 for plugging and

abandonment of the well prior to beginning construction of the well. The Illinois EPA will issue written authorization for the installation of the injection zone monitoring wells.

j. Inactive Wells. (35 Ill. Adm. Code 704.188) After cessation of the monitoring program associated with a Verification Well for a period of two (2) years, the Permittee shall plug and abandon the well in accordance with Condition H.23 of this permit, unless the Permittee has:

   i. Provided notice to the Permit Section, Division of Land Pollution Control; and

   ii. Described actions or procedures, which are deemed satisfactory by the Illinois EPA, to ensure the well will not endanger underground sources of drinking water during the period of temporary abandonment. These actions and procedures shall include compliance with the technical requirements applicable to active injection wells, including mechanical integrity testing, unless waived by the Illinois EPA in writing.

k. Financial Assurance. The Permittee shall maintain financial responsibility and resources in accordance with Condition H.16, to close, plug, and abandon the Verification Well in accordance with the Plugging and Abandonment plan contained in the permit modification application, Log # UIC143-M-2, identified in Condition A.2.

   The cost estimate to close, plug and abandon a Verification Well is $318,000 (2009 dollars).

5. Ambient Monitoring (35 Ill. Adm. Code 730.113(d)) The Permittee shall conduct an Ambient Pressure Monitoring Test annually. The Ambient Pressure Monitoring Test shall be conducted as described in Part 1, page 17 of the permit modification application, Log # UIC143-M-2, identified in Attachment J.

6. Monthly Reporting Requirements

   References to "well" also include reporting on the Verification Well(s) as well as the injection well.

   a. Report submittal date. Monthly monitoring reports are due by the 15th day of the month immediately following a reporting period. A reporting period is defined as a calendar month. The reporting period for the daily values is defined as the period from 6:00 a.m. to 5:59:59 a.m.

b. Contents of monthly reports for the Injection Well. The monthly reports shall include:

i. Daily value for total mass and daily maximum and minimum values for annulus pressure, injection pressure, and flow rate.

ii. Weekly averages for annulus pressure, injection pressure and flow rate using the procedure in Attachment C.

iii. The number of times the injection well is started up during each day

iv. Total hours of injection each day

v. Total mass injected to date

vi. Monthly summary of:

(a) maximum, minimum, and average values for annulus pressure, injection pressure, and flow rate, using the procedure in Attachment C

(b) total mass injected

(c) total number of injection well startups

vii. A copy of the operating charts for the month for:

(a) annulus pressure

(b) injection pressure

(c) flow rate (including notations that identify when the orifice of the flow rate meter was changed and the size orifice that was installed)

If the data is collected electronically, operating chart(s) shall be generated from the electronic data. The charts generated shall be an accurate representation of the electronic data and provide enough resolution to represent the condition of the well during operation. The Agency reserves the right to require submittal of tabular paper copies of the data, changes in the format and resolution of the representative graph(s), and the submittal of the electronic data to Field Operations Staff and Permit Section Staff for review. The electronic data submitted must be in a format that is useable to said staff, such as tab or comma delimited CVS format or Microsoft Excel format.

viii. Results of chemical analyses required by this permit.

c. Contents of monthly reports for the Verification Well(s). The information in the monthly report describe below does not include all of the data that is recorded for the Verification Well. The Agency reserves the right to require submittal of additional information/data that is collected for the verification well. The monthly reports shall include:

i. Daily maximum and minimum values for annulus pressure (gauge PIT-202), Westbay tubing string pressure (gauge PIT-201), Westbay Port 9 formation pressure, Westbay Port 10 formation pressure and QA Zone pressure and temperature.

ii. Weekly averages for annulus pressure, Westbay tubing string pressure, Westbay Port 9 formation pressure, Westbay Port 10 formation pressure and QA Zone pressure and temperature, using the procedure in Attachment C.

iii. Monthly summary of:

(a) maximum, minimum, and average values for annulus pressure, Westbay tubing string pressure, Westbay Port 9 formation pressure, Westbay Port 10 formation pressure and QA Zone pressure and temperature, using the procedure in Attachment C

iv. A copy of the operating charts for the month for:

(a) Verification Well annulus pressure

(b) Westbay tubing string pressure

(c) Westbay Port 9 formation pressure

(d) QA Zone pressure

(e) QA Zone temperature

(f) Westbay Port 10 formation pressure

If the data is collected electronically, operating chart(s) shall be generated from the electronic data. The charts generated shall be an accurate representation of the electronic data and provide enough resolution to represent the condition of the well during operation. The Agency reserves the right to require submittal of tabular paper copies of the data, changes in the format and resolution of the representative graph(s), and the submittal of

the electronic data to Field Operations Staff and Permit Section Staff for review. The electronic data submitted must be in a format that is useable to said staff, such as tab or comma delimited CVS format or Microsoft Excel format.

v. Results of chemical analyses required by this permit.

d. Other information in monthly reports. The results of any of the following tests or work shall be reported with the second monthly report after completion of the test or work:

i. Periodic tests of mechanical integrity.

ii. Copies of any logs run on a well, submitted with a log analysis prepared by a qualified log analyst.

iii. Any other test conducted on a well by the Permittee.

iv. Any well work over.

v. Maintenance performed on monitoring devices or well components.

vi. Changes of gauges, pipes, and other well components and monitoring devices.

vii. Changes in the type of annulus fluid.

viii. Addition or removal of annulus fluids.

ix. Summary of annular fluid level fluctuations.

x. Ambient pressure monitoring results.

e. Illegible reports will be returned to the Permittee and deemed not filed. All graphs and charts will be labeled appropriately.

f. Report submittal addresses. The cover letter for the monthly report will indicate a copy of the report was submitted to each of the following addresses:

i. Illinois Environmental Protection Agency
Division of Land Pollution Control - #33
Permit Section
1021 N. Grand Avenue East
P.O. Box 19276
Springfield, Illinois 62794-9276

ii. Illinois Environmental Protection Agency
Division of Land Pollution Control
Field Operations Section
2125 South 1st Street
Champaign, Illinois 61820

7. Geophone Monitoring Well Requirements

a. Notification Requirements. The Permittee shall comply with the notification requirements of Condition H.14, if at any time the Permittee becomes aware of information which indicates that the Geophone Monitoring Well may endanger health, the environment, or an underground source of drinking water.

b. Financial Assurance. The Permittee shall maintain financial responsibility and resources in accordance with Condition H.16, to close, plug, and abandon the Geophone Monitoring Well in accordance with the Well Abandonment plan contained in the August 25, 2009 permit modification application, Log # UIC143-M-1, identified in Attachment J.

The cost estimate for the Geophone well is $83,000 (2008 dollars), as provided in the written cost estimate dated, January 5, 2011.

C. **EFFECT OF PERMIT.** The existence of a UIC permit shall not constitute a defense to a violation of the Environmental Protection Act or 35 Ill. Adm. Code Subtitle G except for development, modification or operation without a permit. A permit may be modified or revoked during its term for cause set forth in 35 Ill. Adm. Code 702.183 through 702.186. (35 Ill. Adm. Code 702.181)

The Permittee is allowed to engage in underground injection in accordance with the conditions of this permit. The underground injection activity authorized by this permit shall not allow the movement of fluid containing any contaminant into underground sources of drinking water, if the presence of that contaminant may cause a violation of any primary drinking water regulation under 40 CFR Part 142 or may otherwise adversely affect the health of persons or the environment. Any underground injection activity not authorized in this permit or otherwise authorized by permit is prohibited. (35 Ill. Adm. Code 704.122)

Compliance with the terms of this permit does not constitute a defense to any action brought under Section 1431 of the Safe Drinking Water Act (SDWA) or any other law governing protection of public health or the environment for any imminent and substantial endangerment to human health, or the environment. In the case of disagreement between the conditions of this permit and the application, the permit conditions shall govern.

D. **PERMIT ACTIONS.** The filing of a request by the Permittee for a permit modification or revocation, or a notification of planned changes or anticipated noncompliance, does not stay the applicability or enforceability of any permit condition. (35 Ill. Adm. Code 702.146)

E. **SEVERABILITY.** The provisions of this permit are severable, and if any provision of this permit, or the application of any provision of this permit is held invalid, the application of such provision to other circumstances and to the remaining provisions of this permit shall not be affected thereby.

F. **CONFIDENTIALITY.** In accordance with Section 7 of the Environmental Protection Act, certain information submitted to the Illinois EPA pursuant to this permit may be claimed as confidential by the submitter. Any such claim must be asserted at the time of submission by stamping the words "confidential business information" on each page containing such information. If no claim is made at the time of submission, Illinois EPA may make the information available to the public without further notice. If a claim is asserted, the validity of the claim will be assessed in accordance with Illinois Pollution Control Board and Illinois Environmental Protection Agency procedures. Claims of confidentiality for the following information will be denied:

1. The name and address of the Permittee;

2. Information, which deals with the existence, absence or level of contaminants in drinking water.

G. **PENALTIES FOR VIOLATIONS OF PERMIT CONDITIONS.** Any person who violates a permit requirement is subject to civil penalties, fines, and other enforcement action under the Safe Drinking Water Act (SDWA) and the Environmental Protection Act.

H. **DUTIES AND REQUIREMENTS.**

1. Duty to Comply. The Permittee shall comply with all applicable Underground Injection Control (UIC) program regulations and conditions of this permit, except to the extent and for the duration such noncompliance is authorized by a temporary emergency permit under 35 Ill. Adm. Code 704.163. Any permit noncompliance constitutes a violation of the Illinois Environmental Protection Act and is grounds for enforcement action, permit revocation, modification, or denial of a permit renewal application. Such noncompliance may also be grounds for enforcement action under

the Resource Conservation and Recovery Act (RCRA). (35 Ill. Adm. Code 702.141 and 35 Ill. Adm. Code 704.181(a)).

2. Duty to Reapply. If the Permittee wishes to continue an activity regulated by this permit after the expiration date of this permit, the Permittee will submit an application for a new permit at least 180 days before this permit expires. (35 Ill. Adm. Code 702.142)

3. Need to Halt or Reduce Activity. It shall not be a defense for a Permittee in an enforcement action that it would have been necessary to halt or reduce the permitted activity in order to maintain compliance with the conditions of this permit. (35 Ill. Adm. Code 702.143)

4. Duty to Mitigate. The Permittee shall take all reasonable steps to minimize or correct any adverse impact on the environment resulting from non-compliance with this permit. (35 Ill. Adm. Code 702.144)

5. Proper Operation and Maintenance. The Permittee shall at all times properly operate and maintain all facilities, systems of treatment, and controls (and related appurtenances) which are installed or used by the Permittee to achieve compliance with the conditions of this permit. Proper operation and maintenance includes effective performance, adequate funding, adequate operator staffing and training, adequate laboratory and process controls, and appropriate quality assurance procedures. This provision requires the operation of backups, auxiliary facilities, or similar systems used only when necessary to achieve compliance with the condition of the permit. (35 Ill. Adm. Code 702.145)

6. Property Rights. Issuance of this permit does not convey any property rights of any sort, or any exclusive privilege. (35 Ill. Adm. Code 702.147)

7. Duty to Provide Information. The Permittee shall furnish to the Illinois EPA, within the specified times, any information which the Illinois EPA may request, to determine whether cause exists for modifying, revoking and reissuing, terminating this permit, or to determine compliance with this permit. The Permittee shall also furnish to the Illinois EPA, upon request, copies of records required to be kept by this permit. (35 Ill. Adm. Code 702.148)

8. Inspection and Entry (35 Ill. Adm. Code 702.149). The Permittee shall allow an authorized representative of the Illinois EPA, upon the presentation of credentials and other documents, as may be required by law, and at reasonable times, to:

   a. Enter upon the Permittee's premises where a regulated facility or activity is located or conducted, or where records must be kept under the conditions of this permit;

b. Have access to and copy any records that must be kept under the conditions of this permit;

c. Inspect any facilities, equipment (including monitoring and control equipment), practices, or operations regulated or required under this permit; and

d. Sample or monitor for the purposes of assuring permit compliance or as otherwise authorized by the appropriate Act, any substances or parameters at any location.

e. Have access to witness the running of any logs or tests.

9. Monitoring. Samples and measurements taken for the purpose of monitoring shall be representative of the monitored activity. (35 Ill. Adm. Code 702.150(a))

10. Records (35 Ill. Adm. Code 702.150(b),(c) & 704.181(b))

a. The Permittee shall retain records of all monitoring information, including all calibration, maintenance records, original chart recordings for continuous monitoring instrumentation, copies of all reports required by this permit, and records of all data used to complete the application for this permit, for a period of at least 3 years from the date of the sample, measurement, report, or application. This period may be extended by request of the Illinois EPA at any time.

b. Retention of records. The Permittee shall retain records concerning the nature and composition of all injected fluids until three years after the completion of any plugging and abandonment procedures specified under 35 Ill. Adm. Code 704.188. The Owner or Operator shall continue to retain the records after the three year retention period unless the Owner or Operator delivers the records to the Illinois EPA or obtains written approval from the Illinois EPA to discard the records.

c. Records of monitoring information shall include:

i. The date, exact place, and time of sampling or measurements;

ii. The individual(s) who performed the sampling or measurements;

iii. A precise description sampling methodology and handling;

iv. The date(s) analyses were performed;

v. The individual(s) who performed the analyses;

vi. The analytical techniques or methods used; and

vii. The results of such analyses; and

viii. Chain of custody procedures.

11. Signatory Requirements. All reports, or information submitted to the Illinois EPA shall be signed and certified as required in 35 Ill. Adm. Code 702.126. (35 Ill. Adm. Code 702.151)

12. Reporting Requirements.

    a. Planned changes. The Permittee shall give written notice to the Permit Section, Division of Land Pollution Control within 15 days of any planned physical alterations or additions as to the permitted facility. (35 Ill. Adm. Code 702.152(a))

    b. Anticipated noncompliance. The Permittee shall give advance notice to the Permit Section, Division of Land Pollution Control, of any planned changes in the permitted facility or activity which may result in noncompliance with permit requirements. (35 Ill. Adm. Code 702.152(b)).

    c. Other noncompliance. The Permittee shall report all instances of noncompliance not reported under 35 Ill. Adm. Code 702.152 paragraphs (d), (e) and (f) at the time monitoring reports are submitted. The reports shall contain the information referenced in 35 Ill. Adm. Code 702.152 Subsection (f). (35 Ill. Adm. Code 702.152(g))

    d. A summary of the reporting dates can be found in Attachment D for information required by this permit. This summary is provided as a convenience and is not necessarily complete, nor is it to be construed as a substitute for actual permit conditions.

13. Corrective Action Requirements (35 Ill. Adm. Code 704.193)

    a. The permitted well shall be immediately shut-in and the Permit Section, Division of Land Pollution Control, shall be notified if:

        i. upward fluid migration occurs through the well bore of any previously unknown, improperly plugged or other wells due to injection of fluid and/or

        ii. any problems developed with the casing or components of the injection well or monitoring Verification Well(s).

b. Any improperly plugged or unplugged wells will be plugged and abandoned immediately. A copy of the plugging affidavit(s) filed with the Illinois Department of Public Health and the Illinois Department of Natural Resources, Office of Mines and Minerals, Division of Oil and Gas must be submitted to the Permit Section, Division of Land Pollution Control.

c. Telephone notification within twenty-four (24) hours of the discovery of the problem and written confirmation transmitted by letter within five (5) days.

d. In case of a well failure, the Permittee shall implement the contingency plan developed for the injection well and/or monitoring Verification Well(s). An investigation of the indicated well failure and plan of action to eliminate the problem must be conducted and the remedial work performed.

14. Twenty-four Hour Reporting. (35 Ill. Adm. Code 702.152(f))

a. The Permittee shall report to the Permit Section, Division of Land Pollution Control, any noncompliance or well activity which may endanger health or the environment. Any information shall be provided orally within 24 hours from the time the Permittee becomes aware of the circumstances.

b. A written submission shall also be provided to the Permit Section, Division of Land Pollution Control, within 5 days of the time the Permittee becomes aware of the circumstances. The written submission shall contain:

i. a description of the noncompliance problem and its cause;

ii. the period of noncompliance including exact dates and times;

iii. if the noncompliance problem has not been corrected, the anticipated time it is expected to continue; and

iv. steps taken or planned to reduce, eliminate, and prevent reoccurrence of the noncompliance problem.

c. The following shall be included as information which must be reported within 24 hours (35 Ill. Adm. Code 704.181(d)):

i. Any monitoring or other information which indicates any contaminant may cause an endangerment to underground sources of drinking water.

ii. Any noncompliance with a permit condition or malfunction of the injection system and/or monitoring Verification Well(s) which may cause fluid migration into or between underground sources of drinking water.

15. Transfer of Permit.

    a. Transfers. This permit is not transferable to any person except after notice to the Illinois EPA. The Illinois EPA may require modification of the permit to change the name of the Permittee and incorporate such other requirements as may be necessary under the appropriate Act. (35 Ill. Adm. Code 702.152(c))

    b. Transfer by modification. A permit may be transferred by the Permittee to a new owner or operator only if the permit has been modified (under 702.183 through 185), reissued or a minor modification made (under Section 702.187(d)), to identify the new Permittee and incorporate such other requirements as may be necessary under the appropriate Act. The new owner or operator to whom the permit is transferred shall comply with all the terms and conditions specified in such permit. (35 Ill. Adm. Code 702.182(a))

    c. Automatic transfers. (35 I.A. C. 702.182) As an alternative to transfers under condition 15(b), a UIC permit for a well not injecting hazardous waste may be automatically transferred to a new permittee if:

        i. The current permittee notifies the Illinois EPA at least 30 days in advance of the proposed transfer date, described in 15(c)(ii) of this section;

        ii. The notice includes a written agreement between the existing and new permittees containing a specific date for transfer of permit responsibility, coverage, and liability between the current and new permittees;

        iii. The notice demonstrates that the financial responsibility requirements of 35 Ill. Adm. Code 704.189 will be met by the new permittee and that the new permittee agrees to comply with all the terms and conditions specified in the permit to be transferred under automatic transfer conditions; and

        iv. The Illinois EPA does not notify the existing Permittee and the proposed new Permittee of its intent to modify the permit. A modification under this subparagraph may also be a minor modification under 35 Ill. Adm. Code 702.187. If this notice is not received, the transfer is effective on the date specified in the agreement mentioned in 15(c)(ii).

16. Financial Responsibility. (35 Ill. Adm. Code 704.189) The Permittee shall maintain financial responsibility and resources to close, plug, and abandon the underground injection well, Verification Well(s) and the Geophone Monitoring Well located at this facility in a manner prescribed by the Illinois EPA, and Condition H.23 of this permit.

a. The Permittee must show evidence of financial responsibility to the Illinois EPA by the submission of a surety bond, other adequate assurance such as financial statements, or other materials acceptable to the Illinois EPA.

b. The financial documents submitted must be revised and maintained as specified in 35 Ill. Adm. Code 704 and 40 CFR 144.

c. Construction and/or operation of the injection well or Verification Well(s) is prohibited unless the Permittee has adequate financial assurance as described in subpart (a) of this condition.

17. Cost Estimates for Plugging and Abandonment. (35 Ill. Adm. Code 704.212)

a. The Owner or Operator must prepare a written estimate, in current dollars, for the cost of implementing the plugging and abandonment plan as identified in Condition H.23. The cost estimate must equal the cost of plugging and abandonment at the point in the facility's operating life when the extent and manner of its operation would make plugging and abandonment the most expensive. The currently approved cost estimate for plugging and abandonment of the wells under this permit are:

- $359,000 Injection Well (2008 dollars);
- $83,000 Geophone Monitoring Well (2008 dollars)
- $318,000 Verification Well (2009 dollars per well)

b. The Permittee must adjust the cost estimate for inflation within 30 days after each anniversary of the date on which the first cost estimate was prepared. The adjustment must be made as specified in paragraphs (i) and (ii) of this condition, using an inflation factor derived from the annual Oil and Gas Field Equipment Cost Index. The inflation factor is the result of dividing the latest published annual Index by the Index for the previous years.

i. The first adjustment is made by multiplying the cost estimate by the inflation factor. The result is the adjusted cost estimate.

ii. Subsequent adjustments are made by multiplying the latest adjusted cost estimate by the latest inflation factor.

c. The Permittee must review the cost estimate whenever a change in the plan increases the cost of plugging and abandonment. The revised cost estimate must be adjusted for inflation as specified in paragraph (b) of this condition.

d. The Permittee must keep the following at the facility during the operating life of the facility:

   i. the latest cost estimate prepared in accordance with paragraphs (a) and (c) of this condition and,

   ii. the latest adjusted cost estimate prepared in accordance with paragraph (b) of this condition.

18. Insolvency of Financial Institution (35 Ill. Adm. Code 702.160)

    a. A Permittee shall notify the Waste Reduction and Compliance Section, Division of Land Pollution Control, by certified mail of the commencement of a voluntary or involuntary proceeding under 11 U.S.C. (Bankruptcy), naming the owner or operator as debtor, within 10 business days after the commencement of the proceeding. A guarantor of a corporate guarantee as specified in 35 Ill. Adm. Code 704.219 must make such a notification if the guarantor is named as debtor, as required under the terms of guarantee in 35 Ill. Adm. Code 704.240.

    b. A Permittee who fulfills the requirements of 35 Ill. Adm. Code 704.213 by obtaining a letter of credit, surety bond or insurance policy will be deemed to be without the required financial assurance in the event of bankruptcy insolvency or a suspension or revocation of the license or charter of the issuing institution. The owner or operator must establish other financial assurance within 60 days after such an event.

19. Revocation of Permits. (35 Ill. Adm. Code 702.186) The Illinois Pollution Control Board will revoke a permit during its term in accordance with Title VIII of the Illinois Environmental Protection Act or the Illinois EPA will deny permit renewal for the following causes:

    a. The Permittee's violation of the Environmental Protection Act or regulations adopted thereunder;

    b. Noncompliance by the Permittee with any condition of the permit;

    c. The Permittee's failure in the application or during the permit issuance process to disclose fully all relevant facts, or the Permittee's misrepresentation of any relevant facts at any time; or

    d. A determination the permitted activity endangers human health, or the environment and can only be regulated to acceptable levels by permit modification or revocation.

20. State Mining Board Permits. Issuance of this permit does not relieve the Permittee of the responsibility of complying with the provisions of Illinois State Mining Board Rules and Regulations and an Act in Relation to Oil, Gas, Coal, and Other Surface and Underground Resources. (Rule II, Illinois Department of Natural Resources, Office of Mines and Minerals, Division of Oil and Gas, Rules and Regulations)

21. False or Omitted Information.

    a. The Permittee shall not make any false statement, representation, or certification in any application, record, report, plan, or other document submitted to the Illinois EPA, the United States Environmental Protection Agency (USEPA), or required to be maintained under this permit.

    b. If, or when, the Permittee becomes aware of a failure to submit any relevant facts in a permit application or incorrect information was submitted in a permit application or in any report to the Illinois EPA, the Permittee shall promptly submit such facts or correct information to the Permit Section, Division of Land Pollution Control within ten (10) days. (35 Ill. Adm. Code 702.152(h))

22. Restriction on Unpermitted Waste. Only supercritical carbon dioxide generated by ADM's ethanol fermentation operation at this facility may be injected into the injection well CCS #1 under this permit. Other fluids may be injected into injection well CCS #1 for short periods for purposes of well testing, well stimulation or for the purposes of formation testing. The Permittee shall provide notice to the Illinois EPA of these tests in accordance with Condition H.26(e).

23. Plugging and Abandonment.

    a. The Permittee shall notify the Permit Section, Division of Land Pollution Control, 45 days prior to abandonment of the injection well, a Verification Well or the Geophone Monitoring Well. Plans for plugging and abandonment must be submitted 180 days prior to abandonment. (35 Ill. Adm. Code 704.181(e))

    b. The Permittee shall plug and abandon the injection well as provided in 35 Ill. Adm. Code 704.188 and 730.110 and in accordance with the schedule and provisions of the approved plugging and abandonment plans as modified by conditions of this permit. The approved plans consists of Section 10 – Form 4g, Plugging and Abandonment of the permit application Log # UIC-143; the Geophone Well Abandonment Plan as described in the permit modification application, Log # UIC143-M-1; and in Part 2, Verification Well Modifications Form 4g, Plugging and Abandonment of the permit modification application, Log # UIC143-M-2, identified in Attachment J. These plugging and abandonment plans are herein incorporated by reference. (35 Ill. Adm. Code 704.188).

c. The plugging and abandonment plan for the injection well shall be modified such that the well shall be cemented from total depth to the surface. The cement shall be staged in proper intervals using cement that is appropriate for plugging.

d. No later than 60 days after plugging and abandonment of the injection well, Geophone Monitoring Well or a Verification Well, the Permittee shall submit a plugging report to the Permit Section, Division of Land Pollution Control. The report shall be certified as accurate by the person who performed the plugging operation, and shall consist of:

   i. A statement that the well was plugged in accordance with the plan most recently submitted to the Illinois EPA; or

   ii. A statement defining the actual plugging and explaining why the Illinois EPA should approve such deviation, if the actual plugging differed from the approved plan. Any deviation from a previously approved plan which may endanger underground sources of drinking water is cause for the Illinois EPA to require the operator to replug the well; and

   iii. Copy of well plugging affidavit submitted to the Illinois Department of Natural Resources, Office of Mines and Minerals, Division of Oil and Gas; and the Illinois Department of Public Health.

   iv. If an approved plugging and abandonment plan requires a change, a revised plan shall be submitted to the Permit Section, Division of Land Pollution Control for approval. A revised plugging and abandonment plan for the injection well, if approved, will replace Attachment A and become a part of this permit as a modification. A revised plugging and abandonment plan for the Geophone Well or the Verification Well, if approved, will be added as an attachment to the permit or incorporated by reference and become a part of this permit as a modification.

24. Conversion of Wells (35 Ill. Adm. Code 704.181(e)) The Permittee shall notify the Permit Section, Division of Land Pollution Control, 45 days prior to conversion of any well. Plans for conversion must be submitted 180 days prior to actual conversion or abandonment. Injection into converted wells shall not be conducted until the Permittee receives written authorization for injection from the Illinois EPA.

25. Inactive Wells. (35 Ill. Adm. Code 704.188) After cessation of injection for two (2) years, the Permittee shall plug and abandon the well in accordance with Condition H.23 of this permit and 35 Ill. Adm. Code 730.110, unless the Permittee has:

   a. Provided notice to the Permit Section, Division of Land Pollution Control; and

b. Described actions or procedures, which are deemed satisfactory by the Illinois EPA, to ensure the well will not endanger underground sources of drinking water during the period of temporary abandonment. These actions and procedures shall include compliance with the technical requirements applicable to active injection wells, including mechanical integrity testing, unless waived by the Illinois EPA in writing.

26. Duty to Establish and Maintain Mechanical Integrity of the Injection Well (35 Ill. Adm. Code 704.181(h) and 704.190)

a. The Permittee shall establish prior to commencing injection and thereafter mechanical integrity as defined in 35 Ill. Adm. Code 730.108.

b. A demonstration of mechanical integrity in accordance with Attachment A of this permit shall be conducted to ensure the well has integrity during the life of this permit. A descriptive report of all geophysical logs prepared by an independent log analyst, interpreting the results shall be submitted with log analyses to the Permit Section, Division of Land Pollution Control. This report shall be signed by the analyst and shall include his/her phone number.

The descriptive report should also discuss (1) changes in the structure of the well detected by the geophysical logging; (2) the location of defects; (3) any additional monitoring or corrective action that may be needed to assure the integrity of the well; and (4) an evaluation of the impact any defect may have on the integrity of the well and its ability to contain the injectate and protect USDWs over its operating life.

c. The Permittee shall demonstrate the absence of significant leaks in the casing, injection tubing, and packer by use of an annulus pressure test to be conducted annually. The annulus pressure test shall be conducted in accordance with Attachment A, USEPA Region V guidance Determination Of The Mechanical Integrity Of Injection Wells – Attachment 1 (Revised June 11, 1998), and the following conditions:

i. The annular space must be completely filled with annular fluid.

ii. A positive pressure differential between the pressure in the annular space and the injection tubing pressure of at least 100 psi shall be maintained throughout the entire annular space.

iii. Measurements of pressure should be taken at a minimum of every ten minutes.

iv. The well will be deemed to have failed the annulus pressure test if a pressure change of greater than 3% occurs over a one hour period.

d. The Permittee shall demonstrate the absence of significant fluid movement into an underground source of drinking water through vertical channels adjacent to the injection well bore by use of a temperature survey and a time-lapse sigma log. These tests shall be run biannually (every 24 months) in accordance with the procedures outlined in Attachment A.

e. The Permittee will inform the Permit Section, Division of Land Pollution Control, of its intent to conduct pressure test(s), and temperature log(s), plus any additional mechanical tests, logs, or inspections, at least thirty (30) days prior to the demonstration of mechanical integrity. The notice must include the type of test to be conducted, any fluid that will be injected as part of the test, and a demonstration that the fluid will be compatible with the injection well material, formation and carbon dioxide that may come into contact with the testing fluid. If a demonstration of this compatibility has previously been submitted the Permittee may reference the previous submittal.

Should the Permittee not be able to provide the Agency with thirty (30) days advanced notice due to unexpected events, the Permittee shall provide notification within twenty-four (24) hours of the Permittee becoming aware of the need to conduct one or more of the test, logs or inspections identified above. This twenty-four (24) hour notification shall be provided via email and\or telephone to:

Champaign Field Operations Section
E-mail: Jeff.Turner@Illinois.gov
Phone Number: 217-278-5822

Division of Land Pollution Control Permit Section
E-mail: Kevin.Lesko@Illinois.gov
Phone Number: 217-524-3271

A written submission shall also be provided to the Permit Section, Division of Land Pollution Control, within 5 days. The written submission shall contain:

i. The nature of the work to be done;

ii. The reason that the work is required to be conducted without providing thirty (30) days notice; and

iii. A tentative schedule of work to be performed, including an estimate of when required testing may be performed.

f. A cement bond log must be run in the entire length of the long string casing whenever the injection tubing is removed from the well. If the injection tubing is removed more than once in a five year period, only one cement bond log shall be required.

g. An electromagnetic casing inspection log shall be run to determine the thickness, external condition, and internal condition of the long string casing for its entire length. This log shall be run when the tubing is removed from the well for the cement bond log. If the injection tubing is removed more than once in a five year period, only one electromagnetic log shall be required.

h. The Permittee shall cease injection if an apparent loss of mechanical integrity as defined by 35 Ill. Adm. Code 730.108, or Attachment A of this permit, becomes evident during operation or at the time of the mechanical integrity demonstration. Operation shall not be resumed until the Permittee has complied with the provisions of this permit, and applicable regulations, regarding mechanical integrity demonstration and testing.

i. All gauges used in mechanical integrity demonstrations or in daily operations (wellhead surface pressure PIT-009, annulus surface pressure PIT-014, injection fluid surface temperature TIT-009, injection fluid flowrate FIT-006 annular pressure -PIT-202, tubing pressure gauge - PIT-201 and Westbay QA zone monitoring – WBQ) shall be calibrated according to the procedures of the National Bureau of Standards, initially and at least annually thereafter. A copy of the calibration certificate shall be submitted to the Permit Section, Division of Land Pollution Control on January 15 of each year. In addition, recording devices are to be time synchronized at least quarterly.

j. In addition to the mechanical integrity demonstration required by this permit, the Illinois EPA has the authority to require the Permittee to conduct a demonstration of mechanical integrity of the well at any time well operations, or other information, leads the Illinois EPA to decide an additional mechanical integrity demonstration is necessary. The notice requiring the mechanical integrity demonstration shall be in writing and contain justification for requiring the additional testing.

27. Contingency Plan. The Permittee shall implement the contingency plan in accordance with the plans and methods described in the permit modification application, Log # UIC143-M-2, identified in Attachment J and as described in Attachment H of this permit.

28. 39i Certification. The Permittee shall submit a 39i certification and supporting documentation within 30 days of any of the following events:

    a. the owner or operator or officer of the owner, or operator, or any employee who has control over operating decisions regarding the facility has violated federal, State, or local laws, regulations, standards, or ordinances in the operation of waste management facilities or sites; or

    b. the owner or operator or officer of the owner, or operator, or any employee who has control over operating decisions regarding the facility has been convicted in this or another State of any crime which is a felony under the laws of this State, or conviction of a felony in a federal court; or

    c. the owner or operator or officer of the owner, or operator, or any employee who has control over operating decisions regarding the facility has committed an act of gross carelessness or incompetence in handling, storing, processing, transporting or disposing of waste.

    d. a new person is associated with the owner or operator who can sign the application or who has control over operating decisions regarding the facility, such as a cooperate officer or a delegated employee.

    The certification shall describe the violation(s), convictions, carelessness or incompetence as outlined in a, b, or c above and must include the date that a new person as described in d above began employment with the applicant.

    The 39i certification and supporting documentation shall be submitted to the address specified below:

    Illinois Environmental Protection Agency
    Bureau of Land #33
    39(i) Certification
    1021 North Grand Avenue East
    Post Office Box 19276
    Springfield, Illinois 62794-9276

29. Future Regulations. On December 10, 2010 US EPA issued final rules under the Safe Drinking Water Act (SDWA) for underground injection of carbon dioxide for the purpose of geologic sequestration. Pursuant to the requirements of 40 Code of Federal Regulation § 146.81(c) the Permittee must apply to the USEPA for a Class VI permit by December 10, 2011.

30. Future changes to the permit will be processed in accordance with 35 Ill. Adm. Code 704 Subpart H. When required by 35 Ill. Adm. Code 704 Subpart H, the Agency will

prepare a draft permit, public notice its availability for public review and accept comments in accordance with the requirements of 35 Ill. Adm. Code 705.

31. ADM has submitted an application dated July 2011, entitled "Underground Injection Control Permit Application IL- ICCS Project," to the USEPA. This is an application for the construction of an additional carbon sequestration well identified as CCS#2. It appears that this well will be located approximately 3,500 ft. from injection well CCS #1, and within the Area of Review established for CCS#1. Section 5 ("Area of Review") of the application includes the results of a simulation of the operation of both CCS#1 and CCS#2 wells and confirms that the simultaneous operation of the wells will impact the other within the shared injection zone.

    Should operation of CCS#2 be approved by the USEPA, ADM must modify Illinois EPA permit application to address the interaction that would result from the operation of the second well. Pursuant to 35 Ill. Adm. Code 704.191; 704.193; 730.106; and 730.107 operation of CCS#1 under the permit being issued herein may be prohibited if injection well CCS#2 begins operation under a USEPA permit, until such time that the Illinois EPA approves a permit modification to address the impact that the additional well CCS#2 would have on injection well CCS#1.

SFN:KL:kl\1150155136-UIC-UIC143M5.docx

I. GROUNDWATER MONITORING

1. SUMMARY

ADM will install groundwater monitoring wells that will constitute the groundwater monitoring program associated with the injection well process for the UIC for the duration of the Permit.

2. DEFINITIONS

a. "Lowermost USDW" refers to the definition of such as found in 35 Ill. Adm. Code 702.110.

b. "Ft-bgs" refers to the number of feet below the ground surface.

c. "Ft-MSL" refers to the number of feet below the ground surface referenced to Mean Sea Level.

d. "Detected" shall mean a concentration equal to or above the PQL for the applicable analytical methods specified in the approved Sampling and Analysis Plan, which are incorporated by reference in Condition I.8 of the Permit.

e. "Progressive Increase" shall mean an increase in concentration of a constituent in successive sampling events.

f. 'Stick-up" refers to the height of the reference survey detection. This point is determined within $\pm$ 0.01 foot in relation to Mean Sea Level, which in turn is established by reference to an established National Geodetic Vertical Datum.

3. IMPLEMENTATION

a. The Permittee shall implement the groundwater monitoring program established herein, upon the effective date of the Permit.

b. The Permittee shall carry out the groundwater monitoring program specified in this Permit on the groundwater present in the lowermost USDW above the injection zone.

4. WELL LOCATIONS AND CONSTRUCTION

a. The Permittee shall install and maintain the groundwater monitoring wells identified in the table below to allow for the collection of groundwater samples and elevations from the groundwater monitoring wells completed in the lowermost USDW. The locations are identified in Figure 4 of Appendix H of the approved Permit Application.

IEPA Well No.	ADM Well No.	Well Depth (Ft-bgs)	Well Depth Elevation (Ft-MSL)	Well Screen Interval (Ft-MSL)
G101	G101	141.6	531.59	532.09-542.09
G102	G102	142.5	530.93	531.43-541.43
G103	G103	141.6	531.18	531.68-541.68
G104	G104	139.6	542.32	542.82-552.82

b. The Permittee shall construct the groundwater monitoring wells in such a manner as to prevent the movement of fluids into or between underground sources of drinking water. The casing and cementing used in the construction of the wells shall be designed for the life expectancy of the wells.

c. Construction of any new monitoring well/piezometer for inclusion in the permitted groundwater monitoring system must be at a minimum in accordance with the diagram contained in Attachment F to this Permit unless otherwise approved in writing by the Illinois EPA. Any new monitoring well/piezometer must be continuously sampled and logged on Illinois EPA boring logs. An Illinois EPA approved monitoring well diagram, boring logs, and monitoring well completion reports are included as Attachment F to this permit and can be found at http://www.epa.state.il.us/land/regulatory-programs/permits-and-management/forms/index.html#groundwater-permits.

d. The Permittee shall notify the Illinois EPA within thirty (30) days in writing if any of the groundwater monitoring wells identified in Condition I.4(a) above becomes damaged or the structural integrity has been compromised. A schedule for the replacement of the subject well shall accompany this notification. The well shall not be plugged until the new well is on-line and monitoring data has been obtained and verified, unless the well is extremely damaged and would create a potential route for groundwater contamination. Upon replacing the subject well, the Permittee shall provide written documentation to the Illinois EPA regarding the well installation procedures and construction.

e. Should any well become consistently dry or unserviceable; a replacement well shall be provided within ten (10) feet of the existing well. This well shall monitor the same zone as the existing well and be constructed in accordance with the current Illinois

EPA groundwater monitoring well construction standards at the time that the well is replaced. A replacement well which is more than ten (10) feet from the existing well or does not monitor the same geologic zone must be approved by the Illinois EPA and designated as a new well.

f. The Permittee shall submit boring logs, construction diagrams and data sheets from installation and development of a new or replacement well to the Illinois EPA at the address below with thirty (30) days of the date that installation of the well is completed. In addition, the Permittee shall submit certification that plugging and abandonment of a well was carried out in accordance with the approved procedures to the Illinois EPA at the address below within thirty (30) days of the date that the well is plugged and abandoned. All information should be submitted to the appropriate State Agencies.

Illinois Environmental Protection Agency
Bureau of Land - #33
Permit Section
1021 North Grand Avenue East
Post Office Box 19276
Springfield, Illinois 62794-9276

g. All wells/piezometers shall be equipped with protective caps and locks. Monitoring wells or piezometers located in high traffic areas must protected with bumper guards.

h. All groundwater monitoring wells and piezometers not utilized in the groundwater monitoring system, but retained by the facility, must be constructed and maintained in accordance with 77 Ill. Adm. Code 920 regulations.

5. MONITORING PARAMETERS

a The Permittee shall determine groundwater quality at groundwater monitoring wells identified in Condition I.4(a) quarterly for the duration of the Permit. Samples collected during the quarterly events of each year shall be analyzed for the parameters below.

Field Parameters	Storet Number	Reporting Units
pH	00400	
Specific Conductance	00094	micromos/cm
Temperature of Water Sample	00011	°F
Dissolved Oxygen	00300	mg/L
Depth to Water (below land surface)	72019	Feet
Depth to Water (below measuring point)	72109	Feet

Elevation of Groundwater Surface	71993	Ft MSL
Elevation of Bottom of Well*	72020	Ft MSL
Elevation of Measuring Point (Top of Casing)**	72110	Ft MSL

* Shall be determined during the second sampling event each year.
** Shall be surveyed once every two (2) years or whenever the elevation changes as required by Condition I.7(b).

Indicator Parameters	Storet Number	Reporting Units
Alkalinity	00410	mg/L
Bromide	71870	mg/L
Calcium	00916	mg/L
Chloride	00940	mg/L
Sodium	00929	mg/L
Total CO_2	00405	mg/L

6. MONITORING PROGRAM

a. The Permittee shall determine groundwater quality at each monitoring well identified in Condition I.4(a) quarterly for the duration of the Permit. The Permittee shall express the groundwater quality at each monitoring well in a form necessary for the determination of statistically significant changes.

b. The geologic media to be monitored must be the same formation and hydraulically connected to that formation which is determined to be the lowermost USDW beneath the facility.

c. Groundwater quality in geologic units identified as the lowermost USDW must meet 35 Ill. Adm. Code 620.410 Groundwater Quality Standards unless greater background values are determined to be appropriate.

d. The Permittee shall establish background values in accordance with the procedures specified in Appendix H of the approved Permit Application.

e. The Permittee shall determine the groundwater flow rate and direction in the lowermost USDW quarterly and report to the Illinois EPA at least annually from monitoring wells identified in Condition I.4(a).

f. The Permittee shall evaluate the results of the analysis required by Condition I.6(a) above and identify:

   i. The concentration of any constituent detected which was not detected in the previous sampling event.

   ii. The concentration of any constituent detected which exhibits a progressive increase over four (4) consecutive sampling events.

g. The Permittee shall determine whether there is a statistically significant increase, (or decrease in the case of pH) over the background values established for each parameter identified in Condition I.5(a) each time groundwater quality is determined. In determining whether significant changes have occurred the Permittee shall evaluate the date in accordance with the procedures specified in Appendix H of the approved Permit Application.

7. GROUNDWATER ELEVATION

a. The Permittee shall determine the groundwater surface elevation referenced to mean sea level (MSL) at each groundwater monitoring well each time groundwater is sampled in accordance with Condition I.10(c).

b. The Permittee shall determine the surveyed elevation of "stick-up" referenced to MSL when the well is installed (with as-built diagrams) and every two (2) years, or at the request of the Illinois EPA, or whenever the elevation changes in accordance with Condition I.10(d).

c. Elevation, as referenced to MSL, of the bottom of each monitoring well is to be reported at least annually. The mandatory measurement shall be taken during the second quarterly sampling event each year.

8. SAMPLING AND ANALYTICAL PROCEDURES

The Permittee shall use the techniques and procedures described in Appendix H of the approved Permit Application when obtaining and analyzing samples for the groundwater monitoring wells identified in Condition I.4(a) above.

a. Samples shall be collected by the techniques described in Appendix H of the approved Permit Application.

b. Samples shall be preserved, shipped and handled in accordance with the procedures specified in Appendix H of the approved Permit Application.

c. Samples shall be analyzed in accordance with the methods in which the PQLs are less than or equal to the applicable 35 Ill. Adm. Code 620.410 Groundwater Quality Standard.

d. Samples shall be tracked and controlled using the chain-of-custody procedures specified in Appendix H of the approved Permit Application.

9. STATISTICAL PROCEDURES

When evaluating the monitoring results in accordance with Condition I.6(a) above, the Permittee shall use the procedures specified in Appendix H of the approved Permit Application.

10. REPORTING AND RECORDKEEPING

a. The Permittee shall enter all monitoring, testing, and analytical data obtained in accordance with Condition I.5, I.6, I.7, I.8 and I.9 in the operating record.

b. Samples collected to meet the requirements of the groundwater monitoring program described in Conditions I.5 and I.6, I.7, and I.9 shall be collected and reported, as identified in the table below. The results of analysis conducted on the groundwater quality samples shall be submitted in accordance with this schedule to the address listed in Condition I.4(f) above. All additional information required by the groundwater monitoring program (as specified in Conditions I.5, I.6, I.7, and I.9) shall also be submitted to the Illinois EPA at the address listed in Condition I.4(e) in accordance with this schedule.

Samples to be Collected During The Months of	Results Submitted to the Illinois EPA by the Following
January - February	April 15
April – May	July 15
July – August	October 15
October – November	January 15

c. Groundwater surface elevation measured pursuant to Condition I.7(a) shall be collected quarterly and submitted to the Illinois EPA as identified in the table above.

d. The Permittee shall report the surveyed elevation, as required by Condition I.7(b) of the top of the well casing ("stick-up"), referenced to MSL in accordance with the following schedule:

i. For wells identified in Condition I.4(a) every two (2) years (during the second quarterly sampling event), or at the request of the Illinois EPA or whenever the elevation changes.

ii. For any new wells, at the time of installation and reported in the as-built diagrams. Subsequent measurements shall be made every two (2) years or whenever the elevation changes.

e. The Permittee shall report the elevation of the bottom of each monitoring well identified in Condition I.4(a) referenced to MSL, annually.

f. The Permittee shall submit a completed "RCRA Facility Groundwater, Leachate and Gas Reporting Form" (LPC) as a cover sheet for any notices or reports required by the facility's Permit for identification purposes. Only one copy of the LPC 592 must accompany your submittal. However, the Permittee must submit one (1) original and (excluding the groundwater monitoring results submitted in electronic format) a minimum of two (2) copies of each notice or report you submit to the Illinois EPA. The form is not to be used for permit modification requests.

g. Information required by Conditions I.10(b), I.10(c), I.10(d) and I.10(e) must be submitted in an electronic format. The information is to be submitted, as fixed-width text files formatted as found in Attachment G, in accordance with the schedule found in Condition I.10(b) above. Additional guidance regarding the submittal of the information in an electronic format can be found at www.epa.state.il.us/land/regulatory-programs/permits-and-management/index.html

h. The Permittee shall report all information to the Illinois EPA in a form which can be easily reviewed. All submittals contain tables of data drawings and text (as necessary) to accurately describe the information contained in the submittal.

i. In the event that the Permittee confirms that there has been a statistically significant change in groundwater quality the Permittee may demonstrate that a source other than the injection process caused the impact on groundwater or that the source resulted from an error in sampling, analysis, or evaluation. To make this demonstration the Permittee shall:

i. Notify the Illinois EPA in writing within seven (7) days of the confirmation of the impact on groundwater quality that they intend to make this demonstration;

ii. Submit a report to the Illinois EPA, for review and approval, within ninety (90) days which demonstrates that a source other than the injection process caused the impact on groundwater or that the source resulted from an error in sampling, analysis, or evaluation.

j. In the event that the Permittee confirms that there has been an impact on groundwater quality as a result of the injection process into the injection zone, the Permittee shall:

i. Notify the Illinois EPA in writing within seven (7) days of the confirmation of the impact on groundwater quality, identifying each well and parameter;

ii. Discontinue the injection process;

iii. Submit an assessment monitoring plan within thirty (30) days of the confirmation of the impact on groundwater quality. The assessment monitoring program shall include appropriate methods to determine the source of the contamination, characterize the nature and extent of the groundwater contamination, potential threat to human health and the environment, and an assessment of potential migration;

iv. Submit an assessment report, based on and including the data and information generated from the completion of Condition I.10(j)(iii) to the Illinois EPA within ninety (90) days of the approval of the assessment monitoring plan.

v. Propose a corrective action plan if assessment monitoring indicates that the injection process has impacted groundwater. The corrective action plan shall be submitted within thirty (30) days of approval of the assessment report required by Condition I.10(j)iv and include appropriate response action to address any impact of the lowermost USDW. The plan shall be implemented within thirty (30) days of Illinois EPA approval.

11. REQUEST FOR PERMIT MODIFICATION

If the Permittee determines that the groundwater monitoring program no longer satisfies the requirements of 35 Ill. Adm. Code 702, 704 and 730 (e.g. impact to groundwater), the Permittee must submit an application for a permit modification. The permit modification must be submitted to the Illinois EPA within ninety (90) days describing any appropriate changes to the program which will satisfy the regulations.

SFN:KL:kl\1150155136-UIC-UIC143M5.docx

ATTACHMENT A

PROCEDURES USED FOR MECHANICAL INTEGRITY

PROCEDURES USED FOR MECHANICAL INTEGRITY

I. ANNULUS PRESSURE TEST

A. Initial Tests

To be completed during the installation of the well per standard and best completion practices.

1. Move in and rig up workover rig
2. Nipple up BOP (blow out preventer)
3. Pick up packer, tubing and subsurface monitor equipment
4. As each joint or section of joints is run into the hole, test below rotary with hydrotesters to at least 50% of burst.
5. Put packer on depth and set
6. Close pipe rams and/or hydril
7. Test packer on the casing-tubing annulus side for one hour at 1000 psi or greater
8. Bleed off pressure, release pipe rams and/or hydril
9. Hang off tubing, nipple up injection tree and test tree to at greater than or equal to the maximum expected injection pressure for one hour
10. Any significant pressure drop will be investigated to verify that mechanical integrity is intact and corrected as necessary. Pressure test will be rerun following investigation / remediation to confirm integrity.
11. Rig down, move off workover rig

The data obtained, including recorded charts from the tests, shall be submitted as required by the permit.

B. Subsequent Tests

To be completed following a period of carbon dioxide injection.

1. Stop injection and allow well to stabilize
2. Confirm connectivity to and functionality of permanent gauges or install pressure gauge on annulus
3. Rig up pump, pressurize annulus to 1000 psi
4. Observe pressure change over a 1 hour period
5. Any significant pressure drop will be investigated to verify that mechanical integrity is intact and corrected as necessary. Pressure test will be rerun following investigation / remediation to confirm integrity.
6. Plot the gathered data and determine volume of fluid loss if any.

The data obtained, including recorded charts from the tests, shall be submitted as required by the permit.

C. Continual Monitoring

During the injection timeframe of the project, the long string casing-tubing annulus pressure shall be monitored and recorded real time. Pressure in the long string casing-tubing annulus is anticipated to be from 400 to 500 psi. Any significant change of casing-tubing annulus pressure that can be related to mechanical integrity issues will be investigated as a possible leak in one of four areas:

- Casing - from the surface to the packer
- Tubing string - from the surface to the packer
- Packer seal
- Injection wellhead assembly

II. TIME-LAPSE SIGMA LOGGING AND TEMPERATURE SURVEYS

A. Initial Survey - Time Lapse Sigma Logs

To be completed before carbon dioxide injection with the tubing and annular fluid level at least to the Maquoketa Shale or higher (the Maquoketa Shale is located 2611 to 2817 feet below ground surface),

1. Move in and rig up electric logging unit with pressure control
2. Run base RST Sigma Log from total depth through at least the Maquoketa Shale
3. Rig down the logging equipment
4. Process and archive data as baseline

B. Subsequent Surveys - Time Lapse Sigma Logs

To be completed following a period of carbon dioxide injection, with the well in a static condition and fluid level within the tubing string to the Maquoketa Shale or higher

1. Move in and rig up electric logging unit with lubricator
2. Run RST Sigma Log from total depth through at least the Maquoketa Shale
3. Rig down the logging equipment
4. Process the data and compare to baseline log noting any changes in Sigma that can be attributed to carbon dioxide

C. Post Injection Temperature Surveys

Well should be in a state of injection for at least 6 hours prior to commencing operations in order to cool injection zones.

1. Move in and rig up an electrical logging unit with lubricator

2. Run a temperature survey from the Base of the Maquoketa Shale to the deepest point reachable in the Mt. Simon while injecting at a rate that allows for safe operations. Should operation constraints or safety concerns not allow for a logging pass while injecting; an acceptable, alternate plan is to stop injecting immediately prior to the first logging pass.
3. Stop injection, pull tool back to shallow depth, wait 1 hour.
4. Run a temperature survey over the same interval as step 2.
5. Pull tool back to shallow depth, wait 2 hours
6. Run a temperature survey over the same interval as step 2.
7. Pull tool back to shallow depth, wait 2 hours
8. Run a temperature survey over the same interval as step 2
9. Evaluate data to determine if additional passes are needed.
10. Rig down the logging equipment
11. Overlay data and interpret which zones are open to injection.
12. The data obtained shall be submitted as required by the permit.

SFN:KL:kl\1150155136-UIC-UIC143M5.docx

ATTACHMENT B

WELL DIAGRAMS

Injection Wellhead Assembly

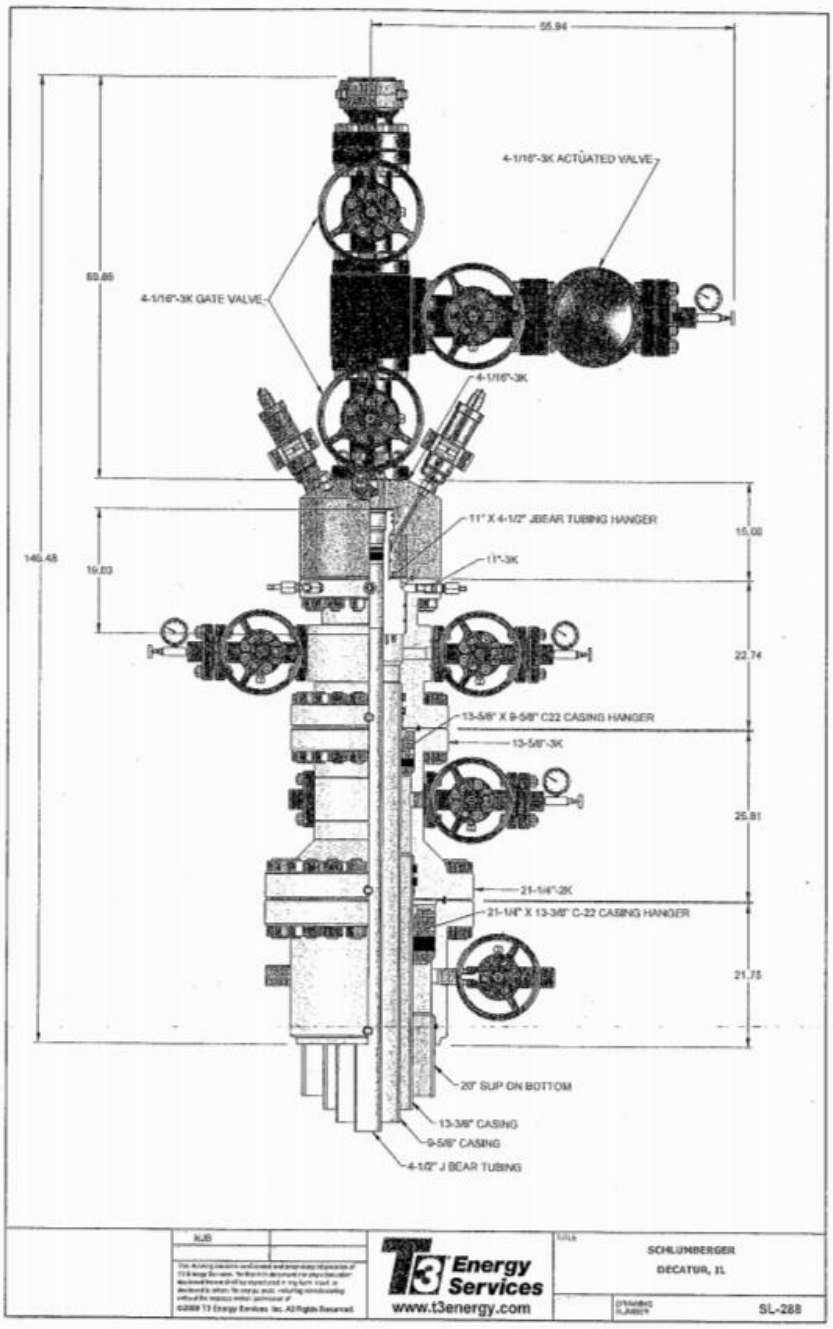

Injection Well Schematic

Ground Surface 674 ft. MSL

Surface Casing

Top Depth:	0 ft.
Bottom Depth:	340 ft.
O.D.:	20 in.
I.D.:	19.124 in.
Weight:	94 lbs/ft.
Grade:	H-40

Intermediate Casings

Top Section

Top Depth:	0 ft.
Bottom Depth:	3651 ft.
O.D.:	13.375 in.
I.D.:	12.515 in.
Weight:	59.5 lbs/ft.
Grade:	J-55

Bottom Section

Top Depth:	3615 ft.
Bottom Depth:	5324 ft.
O.D.:	13.375 in.
I.D.:	12.415 in.
Weight:	66.17 lbs/ft.
Grade:	J-55

Long String Casings

Top Section

Top Depth:	0 ft.
Bottom Depth:	5257 ft.
O.D.:	9.625 in.
I.D.:	8.385 in.
Weight:	38.97 lbs/ft.
Grade:	N-80

Bottom Section

Top Depth:	5257 ft.
Bottom Depth:	7204 ft.
O.D.:	9.625 in.
I.D.:	8.681 in.
Weight:	47 lbs/ft.
Grade:	L-80, 13Cr80

Perforations

6962 – 6963 ft.
6967 – 6997 ft.
7010.5 – 7035.5 ft.

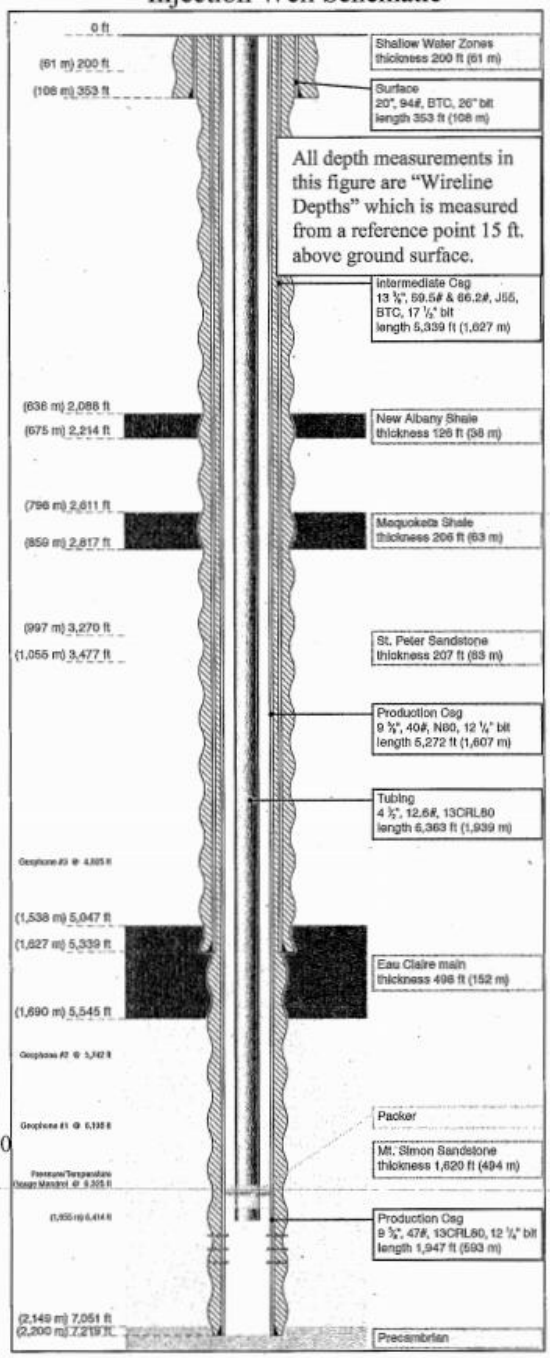

Injection Tubing

Top Depth:	0 ft.
Bottom Depth:	6348 ft.
O.D.:	4.5 in.
I.D.:	3.958 in.
Weight:	12.6 lbs/ft.
Grade:	JFE-13Cr85

Packer

Schlumberger Quantum Max Type III
Q-Max 13-Chrome
Top of packer: 6348.7 ft.
Center of Sealing elements: 6350 ft.

Production String Assembly

Schlumberger

Illinois Basin - Decatur Project

Prepared for:	Date:	Casing:	Completion Type:	Pressure/Temp.
Paul Huges	Nov-24-2009	9 5/8" 40&47# N-80& CR13	Upper Completion	
Field Name:	**Well Name:**	**Casing Drift**	**Rig:**	
Illinois Basin	ADM CCS #1	ID 8.681/Drift 8.525	Wilson 28	
Prepared by:	**District/Phone #:**			3245psi BHP
Roberto Schuldes	Houma, LA / (985) 851-1074			135 Degree F
Production Tubing:				
4 1/2" 12.6# CR13 JFE Bear				

String Weight Include Block -		Rig: Ideco H-35/Pioner Rig 15	
Block Weight -		Item's Actual Pipe Measured Length -	6335.32
Weight On Locator -		Packer Fluid Type and Weight -	9.4 ppg NaCl
Original RKB -		Completion Fluid Type and Weight -	9.4 ppg NaCl

All Depths Are Wireline Depths

Production String Assembly

Depth	Length	ID	OD	
0.00	0.55	11.000	3.958	**Hanger PN: HT06581, Top Thread: 4-1/2 EUE 8rd**
0.55	30.75	4.500	3.958	4 1/2 12.6# 13Cr JFE Bear pup joints (8.52+10.34+8.34+6.55)
31.30	4863.83	4.500	3.958	4 1/2 12.6# 13Cr JFE Bear tubing (Adjusted by 49.67)
4915.13	10.34	4.500	3.958	4 1/2 12.6# 13Cr JFE Bear pup joint
4925.47	9.97	8.350	3.958	**Geophone #3**
4935.44	10.34	4.500	3.958	4 1/2 12.6# 13Cr JFE Bear pup joint
4945.78	786.51	4.500	3.958	4 1/2 12.6# 13Cr JFE Bear tubing
5732.29	10.36	4.500	3.958	4 1/2 12.6# 13Cr JFE Bear pup joint
5742.65	9.97	8.350	3.958	**Geophone #2**
5752.62	10.38	4.500	3.958	4 1/2 12.6# 13Cr JFE Bear pup joint
5763.00	236.64	4.500	3.958	4 1/2 12.6# 13Cr JFE Bear tubing
5999.64	9.34	4.500	3.958	4 1/2 12.6# 13Cr JFE Bear pup joint
6007.98	118.40	4.500	3.958	4 1/2 12.6# 13Cr JFE Bear tubing
6126.38	10.34	4.500	3.958	4 1/2 12.6# 13Cr JFE Bear pup joint
6136.72	9.97	8.350	3.958	**Geophone #1**
6146.69	10.34	4.500	3.958	4 1/2 12.6# 13Cr JFE Bear pup joint
6157.03	157.56	4.500	3.958	4 1/2 12.6# 13Cr JFE Bear tubing
6314.59	10.38	4.500	3.958	4 1/2 12.6# 13Cr JFE Bear pup joint
6325.35	6.01	5.712	3.679	**4 1/2, 12.6#, SBM-FS, NDPG/NLOG, SINGLE, TUBING**
6331.36	10.33	4.500	3.958	4 1/2 12.6# 13Cr JFE Bear pup joint
6341.69	10.33	4.500	3.958	4 1/2 12.6# 13Cr JFE Bear pup joint
6352.02	1.36	4.500	3.813	**4 1/2" x 3.813 X-nipple JFE Bear**
6353.38	10.33	4.500	3.958	4 1/2 12.6# 13Cr JFE Bear pup joint
6363.71	2.08	7.000	3.500	**4.75" Snap latch 13Cr (4 1/2 12.6# JFE Bear)**
6365.79	9.00	4.890	3.500	4.75" Seal Unit 4.124" 13Cr SLHT pin x box ID:127008 PN:4
6374.79	0.81	4.890	3.500	X-O, 4.063-8 SA Pin x 4.124" 13Cr SLHT Box PN: 100714412
6375.60	2.51	4.724	3.750	SAB-3 w/ inner sleeve 13chr 4.063 8SA Box ID: 164046-01, PN:100802582/AA
6378.11				End of Assembly

Depth	Length	ID	OD	
6363.71	6.47	4.750	8.241	Quantum Max Packer Assembly
6370.18	0.83	5.443	7.013	9 5/8" x 4.75" (47-53.5#) Q-Max 13Cr w/HNBR ID# 250148-03
6371.01	19.08	4.750	6.974	X-O, 6.375" 6-SA Box x 6.25" 6-SA Box HOS-252940
6390.07	1.14	3.431	6.950	9 5/8" x 4.75" x 20' PBR PO# 101046
6391.21	10.33	3.442	4.752	X-O, 4" 11.6# NU 8rd Pin x 6.375" 6-SA Box HOS-252941
6401.54	1.54	3.313	4.744	4" NU 8rd 11.6# 13Cr85 Pup Joint w/ Collar
6403.08	10.31	3.442	4.745	4" x 3.313" X-Nipple C-36029-01
6413.39	0.71	3.672	4.780	4" NU 8rd 11.6# 13Cr85 Pup Joint w/ Collar
6414.10				4" NU 8rd 11.6# 13Cr85 Wireline Re-Entry Guide w/ mule shoe SO# 729775
				EOA

* All depth measurements in this table are "Wireline Depths" which is measured from a reference point 15 ft. above ground surface.

Verification Well #1 Schematic

Surface Casing

Top Depth:	0 ft.
Bottom Depth:	365 ft.
O.D.:	13.375 in.
I.D.:	12.615 in.
Weight:	54.5 lbs/ft.
Grade:	J-55

Intermediate Casing

Top Depth:	0 ft.
Bottom Depth:	5305 ft.
O.D.:	9.625 in.
I.D.:	8.835 in.
Weight:	40 lbs/ft.
Grade:	N-80

Long String Casings

Top Section

Top Depth:	0 ft.
Bottom Depth:	5047 ft.
O.D.:	5.5 in.
I.D.:	4.982 in.
Weight:	17 lbs/ft.
Grade:	J-55

Bottom Section

Top Depth:	5047 ft.
Bottom Depth:	7260 ft.
O.D.:	5.5 in.
I.D.:	4.892 in.
Weight:	17 lbs/ft.
Grade:	13Cr85

Perforations

4902.5 - 4905.5 ft.
4985.7 - 4988.7 ft.
5638.8 - 5642.3 ft.
5825.4 - 5828.9 ft.
6401.2 - 6404.7 ft.
6617.3 - 6620.8 ft.
6705.3 - 6708.8 ft.
6822.1 - 6825.6 ft.
6930.6 - 6934.1 ft.
6968 - 6971.5 ft.
7046.2 - 7049.2 ft.

Ground Surface 669 ft. MSL

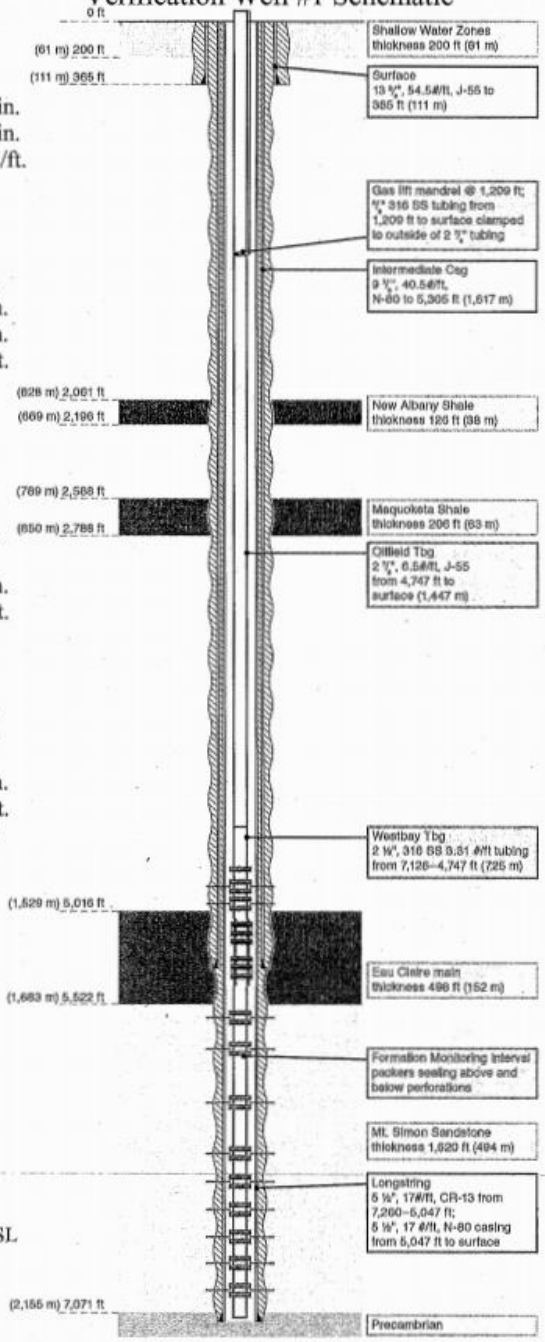

Production Tubing

Top Depth:	0 ft.
Bottom Depth:	4747 ft.
O.D.:	2.875 in.
I.D.:	2.44 in.
Weight:	6.5 lbs/ft.
Grade:	J-55

Westbay Tubing

Top Depth:	4747 ft.
Bottom Depth:	7126 ft.
O.D.:	2.5 in.
I.D.:	2.26 in.
Weight:	3.12 lbs/ft.
Grade:	316L SS

Westbay Packers

Westbay MP55
(Part #: 0414100C4)
316/316L Stainless Steel
Hydrogenated Nitrile
Butadiene Rubber

Westbay Packers Depths (top of packer)

P 28 - 4823.8 ft.
P 27 - 4890.7 ft.
P 26 - 4937.9 ft.
P 25 - 4973.8 ft.
P 24 - 5021.0 ft.
P 23 - 5283.5 ft.*
P 22 - 5329.3 ft.*
P 21 - 5365.2 ft.*
P 20 - 5410.9 ft.*
P 19 - 5456.6 ft.*
P 18 - 5502.4 ft.*
P 17 - 5627.0 ft.*
P 16 - 5674.2 ft.
P 15 - 5813.5 ft.
P 14 - 5860.7 ft.
P 13 - 6389.3 ft.
P 12 - 6436.5 ft.
P 11 - 6605.4 ft.
P 10 - 6652.6 ft.
P 9 - 6693.4 ft.
P 8 - 6740.6 ft.
P 7 - 6811.0 ft.
P 6 - 6858.2 ft.
P 5 - 6918.7 ft.
P 4 - 6956.1 ft.
P 3 - 7003.3 ft.
P 2 - 7034.2 ft.
P 1 - 7081.4 ft.

* QA Zones located between noted packers.
QA Zone between P18 & P19 continuously monitored.

Geophone Monitoring Well

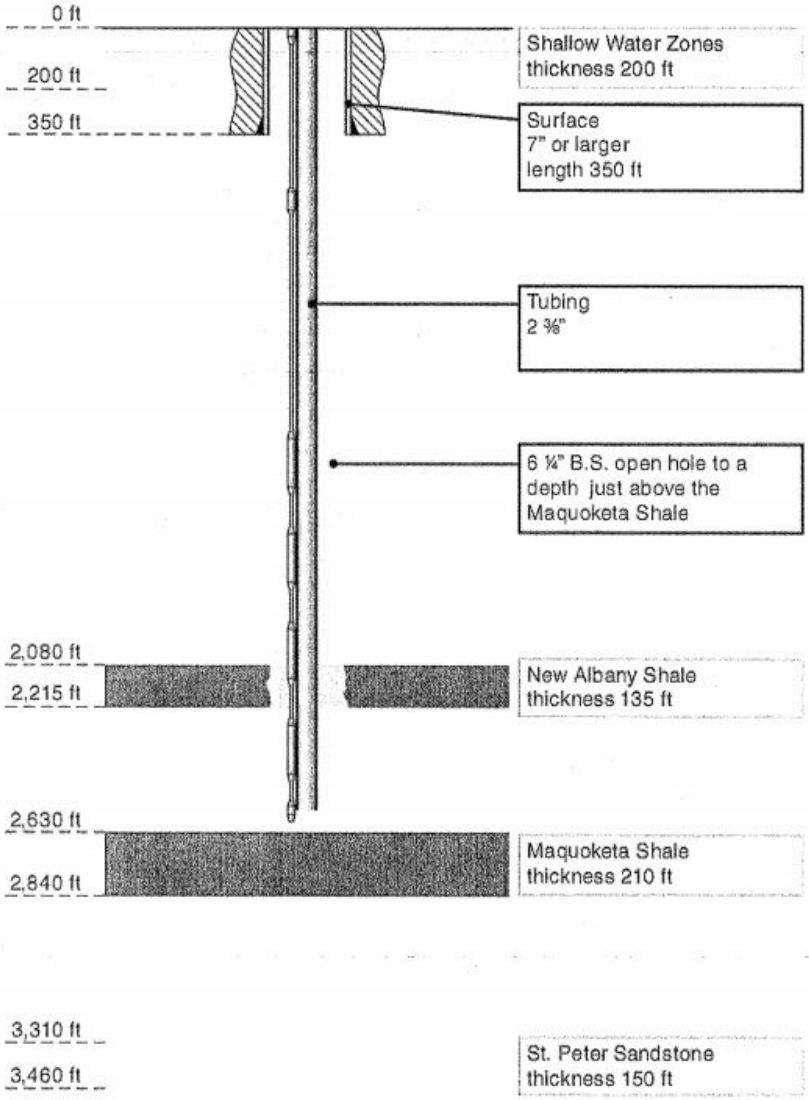

ATTACHMENT C

PROCEDURE FOR CALCULATING AVERAGE VALUES

PROCEDURE FOR CALCULATING AVERAGE VALUES

Electronic Data Collection and Storage

The following procedures apply where data is collected and stored electronically:

1. Flow rate (mass/time) will be monitored continuously and clock hour averages will be generated as the default stored value.

2. Flow rate averages will be generated on a weekly basis (hourly averages from Monday 6:00 am to Sunday 5:59 am) by summing the hourly averages during injection and dividing by the number of injection hours.

3. Flow rate averages will be generated on a monthly basis (hourly averages from 6:00am to 5:59am) by summing the hourly averages during injection and dividing by the number of injection hours. Weeks will be designated as Calendar Days 1-7, Days 8-14, Days 15-21, Days 22-28, and Days 29-31 (where applicable) of each calendar month.

4. Annulus and Injection Pressure averages will be handled in the same manner (i.e., continuous monitoring with hourly averages generated), but averages will not discount non-injection periods, i.e., reported weekly and monthly average values will include all hourly averages collected.

Mechanical Data Collection and Storage

The following procedures apply where data is collected and stored using paper strip charts and/or pencils for recording a graph, i.e., mechanical data collection devices:

$$\text{Weekly Average Flow Rate} = \frac{\text{Total volume injected (gal/week)}}{\text{(total hrs. of injection/week) (60 min./hr)}}$$

$$\text{Monthly Average Flow Rate} = \frac{\text{Total volume injected (gal/month)}}{\text{(total hrs. of injection/month) (60 min./hr)}}$$

The annulus pressure and injection pressure averages are to be calculated by an integration of the curve. The values for the annulus pressure average are the values at the beginning of each week, including all values during the week, and ending with the value at the end of each week. The monthly annulus pressure average is calculated with all values from the beginning of each month, to the end of the month.

When a month begins or ends in the middle of a week, the weekly charts shall be submitted with the monthly report which coincides with the initial date of each weekly chart. For example, a chart beginning the week of Monday May 30th through Sunday June 5th would be submitted

with the monthly report for May and these values shall be used for the calculation of the weekly average flow rate for the last week in May.

The weekly injection pressure average includes all values that occur during the week, all "zero" startup values, and "zero" shutdown values, etc. The monthly injection pressure average will include all injection pressure values that occur during the month, including startups, shutdowns, and continuous injection values.

SFN:KL:kl\1150155136-UIC-UIC143M5.docx

ATTACHMENT D

SUMMARY OF SUBMITTAL DATES

The following is a summary of submittal dates for data required by this permit. This summary is provided to highlight some of the submittals required by this permit. The referenced condition must be consulted for complete details.

Condition	Submittal	Date Due
A 4	Change in Tubing and Packer	30 days prior to installation
A 9	Report providing information on mechanical gauges for the injection and verification wells	Within 30 days of issuance of the permit. (Log #UIC-143-M-3)
B 1(e)(iv)	Changes to the composition of annular fluid	Next Monthly Report
B 4(b)(v)	Changes to the composition of annular fluid	Next Monthly Report
B 4(g)	Verification Well Completion Report	Within 120 days of completion of the Verification Well
B 4(h)(v)	Annual Report on Westbay automated logging system	January 15 of each year
B 4(h)(viii)	Mechanical Integrity Testing	30 days prior to demonstration
B 4(h)(viii)	Mechanical Integrity Testing	24 hour notice due to unexpected events
B 4(h)(xii)	Gauge Calibration	January 15 of each year
B 4(i)	Installation of Second Verification Well	90 days prior to the planned installation
B 6	Well Completion Report	Within 120 days of completion of injection well
B 7	Monthly Operation Reports	15th each month (Quarterly data due with reports submitted by January 15, April 15, July 15 or October 15).
H 12(a)	Planned Changes	15 days prior to planned changes

Condition	Submittal	Due Date
H 13(c)	Corrective Action Requirements by Telephone	24 hours after the discovery
H 13(c)	Corrective Action Requirements by Letter	5 days after the discovery
H 14	Endangerment of Environment Oral Notification	Within 24 hours of time of endangerment
	by Letter	Within 5 days of endangerment
H 17(b)	Plugging and Abandonment Cost Estimates for Inflation	30 days after anniversary
H 22	Restriction of Injected Substances	January 15 of each year
H 23(d)	Certification of Plugging and Abandonment	60 days after plugging
H 24	Plans for Conversion	180 days prior to actual conversion
H 24	Notify before Conversion or Abandonment	45 days prior to conversion or abandonment
H 26(e)	Mechanical Integrity Testing	30 days prior to demonstration
H 26(e)	Mechanical Integrity Testing	24 hour notice due to unexpected events
H 26(i)	Gauge calibration	January 15 of each year
H 28	39i Certification	Within 30 days of any event described in Condition H 28

SFN:KL:kl\1150155136-UIC-UIC143M5.docx

ATTACHMENT E

WELL COMPLETION REPORT
(UIC Form 4h)

ILLINOIS ENVIRONMENTAL PROTECTION AGENCY
UNDERGROUND INJECTION CONTROL PERMIT APPLICATION

FORM 4h - WELL COMPLETION REPORT

USEPA ID NUMBER _____
IEPA ID NUMBER _____
WELL NUMBER _____

I. Type of Permit
Individual: _____
Emergency _____
New _____
Renewal _____
Permit Number _____
Area: _____
Number of well _____
Name of Field _____
Emergency _____
New _____
Renewal _____
Permit Number _____

Location in Application

_____ II. Location, see instructions
_____ A. Township-Range-Section
_____ B. Latitude/Longitude
_____ C. Closest Municipality
_____ III. Surface Elevation
_____ IV. Well Depth
_____ V. Static Water Level
_____ VI. Demonstrated Fracturing Pressure, if applicable
_____ VII. Injection Well Completion
_____ VIII. Well schematic or other appropriate drawing of surface and subsurface construction details
_____ IX. Well Design and Construction
_____ A. Well hole diameters and corresponding depth intervals
_____ B. Annulus Protection System
_____ 1. Annular space, ID and OD
_____ 2. Type of annular fluid(s)
_____ 3. Specific gravity of annular fluid
_____ 4. Coefficient of annular fluid
_____ 5. Packer(s)

_____ a. Setting depth
_____ b. Type
_____ c. Name and model
_____ 6. Description of fluid spotting frequency, type and quantity
_____ 7. Information on well driller used for construction of this well
_____ X. Tests and Logs
_____ A. During Drilling
_____ B. During and after casing installation
_____ C. Demonstrate mechanical integrity prior to operation
_____ D. Copies of logs and tests listed above
_____ E. Description of well stimulation
_____ XI. Well Design and Construction
_____ A. Casings, see instructions
_____ 1. Conductive casing
_____ 2. Surface casing
_____ 3. Intermediate casing(s)
_____ 4. Long string casing
_____ 5. Other casing
_____ B. Injection Tubing, see instructions
_____ 1. Maximum allowable suspended weight based on joint strength
_____ 2. Weight of injection tubing string (axial load) in air
_____ C. Cement, see instructions
_____ 1. Conductive casing
_____ 2. Surface casing(s)
_____ 3. Intermediate casing
_____ 4. Long string casing
_____ 5. Other casing
_____ XII. Surface Facilities, see instructions
_____ A. Filters(s)
_____ B. Injection pump(s)
_____ XIII. Hydrogeologic Information
_____ A. Revised UIC Form 4a
_____ B. Revised UIC Form 4d using actual data on injection formation
_____ C. Revised UIC Form 4g
_____ D. Copy of well completion report submitted to the Department of Natural Resources (Formerly Mines and Minerals)
_____ E. Copy of any plugging affidavits on injection well filed with Department of Natural Resources

_____ XIV. Injection Fluid Compatibility, see instructions
_____ A. Compatibility with injection zones fluid
_____ B. Compatibility with minerals in the injection zone
_____ C. Compatibility with minerals in confining zone
_____ D. Compatibility with injection well components

_____ 1. Injection tubing
_____ 2. Long string casing
_____ 3. Cement
_____ 4. Annular fluid
_____ 5. Packer(s)
_____ 6. Well head equipment
_____ 7. Holding tank(s) and flow lines
_____ E. Full description of compatibility of injection fluid with items A through D
_____ XV. Monitoring Program, see instructions
_____ A. Injection pressure gauge(s)
_____ B. Casing-tubing annular pressure gauge(s)
_____ C. Flow meter(s)
_____ D. pH recording device(s)
_____ E. Temperature

Certification

I certify under penalty of law that this document and all attachments were prepared under my direction or supervision in accordance with a system designed to assure that qualified personnel properly gather and evaluate the information submitted. Based on my inquiry of the person or persons who managed the system, or those persons directly responsible for gathering the information, the information submitted is, to the best of my knowledge and belief, true, accurate and complete. I am aware that there are significant penalties for submitting false information, including the possibility of fine and imprisonment for knowing violations.

_____ _____
Name & Official Title Phone Number

_____ _____
Signature Date Signed

ATTACHMENT F

GROUNDWATER MONITORING WELL ATTACHMENTS

Monitoring Well Diagram

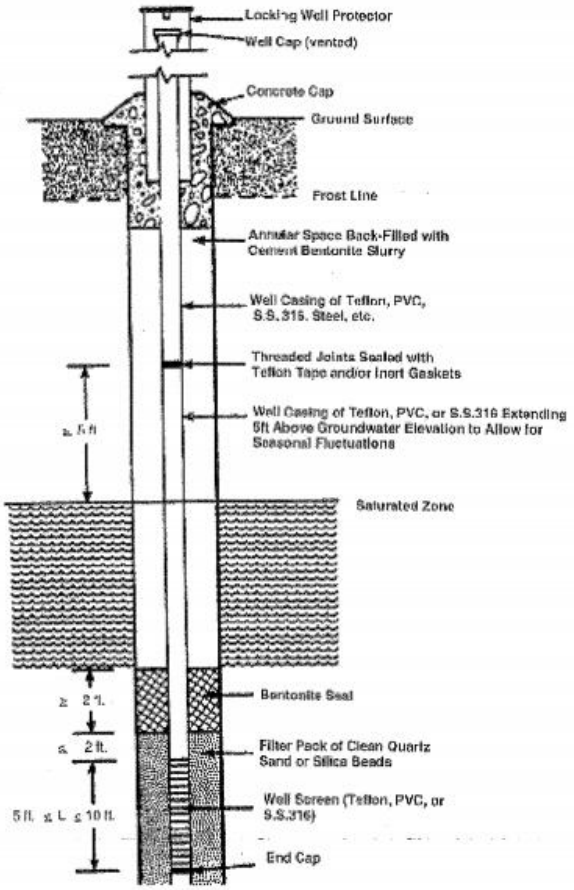

Illinois Environmental Protection Agency **Well Completion Report**

Site Number: _____ County: _____

Site Name: _____ Well #: _____

State Plane Coordinate: X _____ Y _____ (or) Latitude: ___ ___ ___ Longitude: ___ ___ ___ Borehole #: _____

Surveyed by: _____ IL Registration #: _____

Drilling Contractor: _____ Driller: _____

Consulting Firm: _____ Geologist: _____

Drilling Method: _____ Drilling Fluid (Type): _____

Logged By: _____ Date Started: _____ Date Finished: _____

Report Form Completed By: _____ Date: _____

ANNULAR SPACE DETAILS

Type of Surface Seal: _____

Type of Annular Sealant: _____

Installation Method: _____

Setting Time: _____

Type of Bentonite Seal - - Granular, Pellet, Slurry (Choose One)

Installation Method: _____

Setting Time: _____

Type of Sand Pack: _____

Grain Size: _____ (Sieve Size)

Installation Method: _____

Type of Backfill Material: _____ (if applicable)

Installation Method: _____

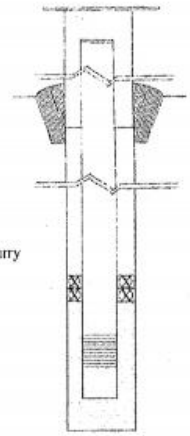

Elevations (MSL)*	Depths (BGS)	(.01ft.)
_____	_____	Top of Protective Casing
_____	_____	Top of Riser Pipe
_____	_____	Ground Surface
_____	_____	Top of Annular Sealant
_____	_____	Static Water Level (After Completion)
_____	_____	Top of Seal
_____	_____	Top of Sand Pack
_____	_____	Top of Screen
_____	_____	Bottom of Screen
_____	_____	Bottom of Well
_____	_____	Bottom of Borehole

* Referenced to a National Geodetic Datum

WELL CONSTRUCTION MATERIAL
(Choose one type of material for each area)

Protective Casing	SS304, SS316, PTFE, PVC, or Other
Riser Pipe Above W.T.	SS304, SS316, PTFE, PVC, or Other
Riser Pipe Below W.T.	SS304, SS316, PTFE, PVC, or Other
Screen	SS304, SS316, PTFE, PVC, or Other

CASING MEASURMENTS

Diameter of Borehole (inches)	
ID of Riser Pipe (inches)	
Protective Casing Length (feet)	
Riser Pipe Length (feet)	
Bottom of Screen to End Cap (feet)	
Screen Length (1st slot to last slot) (feet)	
Total Length of Casing (feet)	
Screen Slot Size **	

**Hand-Slotted Well Screens are Unacceptable

Well Completion Form (revised 02/06/02)

Illinois Environmental Protection Agency

Field Boring Log Page ___ of ___

Site ID No. _____ Federal ID No. _____

Site Name: _____

Quadrangle: _____ Sec. _____ T. _____ R. _____

UTM (or State Plane) Coord. N. (X) _____ E. (Y) _____

Latitude: ___ ° ___ ' ___ " Longitude: ___ ° ___ ' ___ "

Boring Location: _____

Drilling Equipment: _____

County: _____

Boring No. _____ Monitoring Well No. _____

Surface Elevation: _____ Completion Depth: _____

Auger Depth: _____ Rotary Depth: _____

Date: Start: _____ Finish: _____

Elev.	Description of Material	Graphic Log	Depth In Feet	SAMPLES: Sample No.	Sample Type	Sample Recovery (%)	Penetrometer	N Values (Blows/6 inches)	OVA or HNU Readings	Personnel: G - D - H - H - / REMARKS

Field Boring Log (revised 02/02/04

ATTACHMENT G

ELECTRONIC GROUNDWATER SUBMITTAL

Formatting Requirements for the 01 Record of the Electronically Submitted Groundwater and Leachate Data (the 01 Record portion of the LPC-160 is included for example purposes)

ILLINOIS ENVIRONMENTAL PROTECTION AGENCY
DIVISION OF LAND POLLUTION CONTROL
CHEMICAL ANALYSIS FORM

Page 1 of _____

RECORD CODE: L P C S M 0 1 (1–7)
TRANS CODE: A (8)

REPORT DUE DATE __ __/__ __/__ __ (36 M D Y 41)

FEDERAL ID NUMBER _____

SITE INVENTORY NUMBER _____ (9–18)

MONITOR POINT NUMBER (see Instructions) _____ (19–22)

REGION _____ CO. _____

DATE COLLECTED __ __/__ __/__ __ (23 M D Y 28)

FACILITY NAME _____

FOR IEPA USE ONLY

LAB _____ (29)

DATE RECEIVED __ __/__ __/__ __ (42 M D Y 47)

BACKGROUND SAMPLE (X) _____ (54)

TIME COLLECTED (24 Hr. Clock) __ __:__ __ (55 H M 58)

UNABLE TO COLLECT SAMPLE (see Instructions) _____ (59)

MONITOR POINT SAMPLED BY (see Instructions) _____ (60)

OTHER (SPECIFY) _____

SAMPLE FIELD FILTERED — INORGANICS (X) _____ (61) ORGANICS (X) _____ (62)

SAMPLE APPEARANCE _____ (63–102)

COLLECTOR COMMENTS _____ (103–142)

LAB COMMENTS _____ (189–199)

IL 532 1213
LPC 160 01/90

This Agency is authorized to require this information under Illinois Revised Statutes, 1979, Chapter 111 ½, Section 1004 and 1021. Disclosure of this information is required. Failure to do so may result in a civil penalty up to $25,000 for each day the failure continues a fine up to $1,000.00 and imprisonment up to one year. This form has been approved by the Forms Management Center.

All analytical procedures must be performed in accordance with the methods contained in "Test Methods for Evaluating Solid Wastes, Physical/Chemical Methods," SW-846, 3rd Edition, September 1986 or equivalent methods approved by the Agency. Proper sample chain of custody control and quality assurance/quality control procedures must be maintained in accordance with the facility sampling and analysis plan.

*Only Keypunch with Data in Column 35 or Columns 38-47

Page 1 of 2

KEY:

Spaces Numbered	Description	Format
Spaces 1-7	Record Code	LPCSM01
Space 8	Trans Code	A
Spaces 9-18	Site ID	0000000000
Spaces 19-22	Mon Pt ID	G000
Spaces 23-28	Date Collected	000000
Space 29	Lab	
Spaces 30-35	Filler	
Spaces 36-41	Report Due Date	000000
Spaces 42-47	Date Received	000000
Spaces 48-53	Filler 2	
Space 54	Background Sample	
Spaces 55-58	Time Collected	0000
Space 59	Unable to Collect Sample	
Space 60	Monitoring Point Sampled By	
Space 61	Field Filtered – Inorganic	
Space 62	Field Filtered – Organic	
Spaces 63-102	Sample Appearance	
Spaces 103-142	Collector Comments	
Spaces 143-149	Filler 3	
Spaces 150-199	Lab Comments	

Formatting Requirements for the 02 Record of the Electronically Submitted Groundwater and Leachate Data (the 02 Record portion of the LPC-160 is included for example purposes)

RECORD CODE | L | P | C | S | M | 0 | 2 | (1–7) TRANS CODE | A | (8) (COLUMNS 9-29 FROM ABOVE)

	FIELD MEASUREMENTS CONSTITUENT DESCRIPTION AND REQUIRED UNIT OF MEASURE	STORET NUMBER (30–34)	Remarks See Inst. (35)	Replicate (36)	< or > (37)	VALUE (38–47)
Q	TEMP OF WATER (unfiltered °F)	00011				
Q	SPEC COND (unfiltered umhos)	00094				
Q	pH (unfilted units)	00400				
Q	ELEV OF GW SURF (ft ref MSL)	71993				
Q	DEPTH OF WATER (ft below LS)	72019				
A	BTM WELL ELEV (ft ref MSL)	72020				
Q	DEPTH TO WATER FR MEA PT (ft)	72109				

IL 532 1213
LPC 160 01/90

This Agency is authorized to require this information under Illinois Revised Statutes, 1979, Chapter 111 ½, Section 1004 and 1021. Disclosure of this information is required. Failure to do so may result in a civil penalty up to $25,000 for each day the failure continues a fine up to $1,000.00 and imprisonment up to one year. This form has been approved by the Forms Management Center.

All analytical procedures must be performed in accordance with the methods contained in "Test Methods for Evaluating Solid Wastes, Physical/Chemical Methods," SW-846, 3rd Edition, September 1986 or equivalent methods approved by the Agency. Proper sample chain of custody control and quality assurance/quality control procedures must be maintained in accordance with the facility sampling and analysis plan.

***Only Keypunch with Data in Column 35 or Columns 38-47**

KEY:

Spaces Numbered	Description	Format
Spaces 1-7	Record Code	LPCSM02
Space 8	Trans Code	A
Spaces 9-18	Site ID	0000000000
Spaces 19-22	Mon Pt ID	
Spaces 23-28	Date Collected	
Space 29	Lab	
Spaces 30-34	STORET Number	
Space 35	Remarks	
Space 36	Replicate	
Space 37	< or >	
Space 38-47	Value	

ATTACHMENT H

PROCEDURE FOR WELL OR EQUIPMENT FAILURE

Attachment H

PROCEDURE FOR WELL OR EQUIPMENT FAILURE

A. Injection Well

1. Automatic shutdown of the injection system will occur if:
   a. Injection pressure at the wellhead exceeds 1,950 psig;
   b. annulus pressure drops below 400 psig;
   c. annulus pressure is less than pressure of the injection zone over the interval between the packer and the confining layer;
   d. injection of non-supercritical fluid occurs;*
   e. injection fluid temperature falls outside of the permitted range (60-150°F) as measured at the surface near the wellhead;*
   f. the injection rate exceeds 1,833 lbs/min for greater than 8 hours;
   g. the continuous electronic monitoring system is not functional;
   h. there is reason to believe that the mechanical integrity of the injection well has be compromised; or
   i. there is reason to believe that the integrity of the confining layer has been compromised.

   * Per permit Condition B.1(d) these limits do not apply during startup, testing and shutdown periods.

2. In the event an automatic shutdown is triggered, the owner or operator shall immediately investigate and identify the cause of the alarm or shutoff without undue delay. If, upon such investigation, the well appears to be lacking mechanical integrity, or if monitoring required under permit Condition B.2(b) and (d) otherwise indicates that the well may be lacking mechanical integrity, the owner or operator shall:

   a. Stop injecting fluids unless authorized by permit condition to continue or resume injection;
   b. Take all necessary steps to determine the presence or absence of a leak; and
   c. Notify the Illinois EPA within 24 hours after the alarm or shutdown.

3. In the event loss of mechanical integrity is discovered pursuant to Item A.1, above or during periodic mechanical integrity testing, the owner or operator shall:

   a. Immediately cease injection of fluids;
   b. Take all steps reasonably necessary to determine whether there may have been a release of injection fluids into any unauthorized zone;
   c. Notify the Illinois EPA within 24 hours after loss of mechanical integrity is discovered;
   d. Notify the Illinois EPA when injection can be expected to resume; and

e. Restore and demonstrate mechanical integrity pursuant to 35 Ill. Adm. Code 730.108 prior to resuming injection of waste fluids.

4. In the event of a failure of the continuous monitoring system injection shall cease and manual field readings shall be obtained from the gauges identified in Attachment I, "Field Log – Injection/Verification Wells", of this permit. The manual reading shall be recorded on the "Field Log – Injection/Verification Wells." The initial readings shall be obtained within 30 minutes of the failure and every four (4) hours afterword until the continuous monitoring system is restored. Copies of the log(s) and a report regarding the maintenance performed to correct the failure shall be provided with the monthly report as required in Condition B.7. Injection shall not resume until such time as all of the components of the continuous monitoring are operating properly.

B. Verification Well

1. Automatic shutdown of the injection system will occur if the following events occur at a Verification Well:
   a. pressure in the upper annulus pressure drops to -0.7 psig or is greater than 100 psig;
   b. pressure within the Westbay tubing string drops below -0.7 psig or is greater than 100 psig;
   c. an unexpected change in pressure occurs within the second QA zone up from the base of the confining layer; *
   d. the continuous electronic monitoring system is not functional;
   e. There is an unexplained drop in the fluid levels in the upper annulus of the Verification Well;
   f. There is an unexplained drop in the fluid levels within the Westbay tubing string of the Verification Well;
   g. there is reason to believe that the mechanical integrity of the injection well has be compromised; or
   h. there is reason to believe that the integrity of the confining layer has been compromised.

   * This limit does not apply during periods when the Westbay monitoring system has been removed for maintenance.

2. In the event an automatic shutdown is triggered by events identified in Item B.1, the owner or operator shall immediately investigate and identify the cause of the alarm or shutoff without undue delay. If, upon such investigation, the Verification Well appears to be lacking mechanical integrity, or if monitoring required under permit Condition B.4 otherwise indicates that the well may be lacking mechanical integrity, the owner or operator shall:

   a. Stop injecting fluids unless authorized by permit condition to continue or resume injection;

b. Take all necessary steps to determine the presence or absence of a leak; and
c. Notify the Illinois EPA within 24 hours after the alarm or shutdown.

3. In the event loss of mechanical integrity is discovered pursuant to Item B.1 above or during periodic mechanical integrity testing, the owner or operator shall:

   a. Immediately cease injection of fluids;
   b. Take all steps reasonably necessary to determine whether there may have been a release of injection fluids into any unauthorized zone;
   c. Notify the Illinois EPA within 24 hours after loss of mechanical integrity is discovered;
   d. Notify the Illinois EPA when injection can be expected to resume; and
   e. Restore and demonstrate mechanical integrity pursuant to 35 Ill. Adm. Code 730.108 prior to resuming injection of waste fluids.

4. In the event of a failure of the continuous monitoring system for the Verification Well injection shall cease and manual field readings shall be obtained from the gauges identified in Attachment I, "Field Log – Injection/Verification Wells", of this permit. The manual reading shall be recorded on the "Field Log – Injection/Verification Wells." The initial readings shall be obtained within 30 minutes of the failure and every four (4) hours afterword until the continuous monitoring system is restored. Copies of the log(s) and a report regarding the maintenance performed to correct the failure shall be provided with the monthly report as required in Condition B.7. Injection shall not resume until such time as all components of the continuous monitoring system are operating properly.

SFN:KL:kl\1150155136-UIC-UIC143M5.docx

ATTACHMENT I

FIELD LOG – INJECTION/VERIFICATION WELLS

FIELD LOG – INJECTION / VERIFICATION WELLS

(For back up field data collection in the event of power outage or other data transmission loss from automated gauges – see "*Instructions*")

Illinois EPA Site #1150155136 – Macon County Archer Daniels Midland – Corn Processing Carbon Sequestration Injection and Verification Wells	Permit No. UIC-012-ADM Well No. CCS-1 UIC Log # UIC-143-M-2

ADM Supervisor: _____

Readings Taken by: Name: _____

Phone: _____

Check Box(es) Above Failed Instrument(s) ➔						
DATE	**TIME**	**Injection Wellhead Pressure** PIT-009 (psig)	**Injection Annulus Pressure** PIT-014 (psig)	**Verification Tubing Pressure** Westbay (psig)	**Verification Annulus Pressure** Westbay (psig)	**INITIALS**

INSTRUCTIONS *– Within 30 minutes of a communication loss, manual readings of the pressure in the tubing and annulus of both wells will be taken and recorded, and continued every 4 hours thereafter until communication is restored. Note that in the event of a communication loss, injection will cease.*

ATTACHMENT J

APPROVED PERMIT APPLICATION

Document	Dated	Received
Initial Permit Application	01/31/2008	01/31/2008
Revised Initial Application (in entirety)	04/24/2008	04/28/2008
Revisions to 04/24/2008 application	06/20/2008	06/24/2008
Revisions to 04/24/2008 application	08/19/2008	08/21/2008
Revisions to 04/24/2008 application	12/19/2008	12/21/2008
Geophone Well Installation (Minor Modification - Log#: UIC-143-M-1)	08/05/2009	08/06/2009
Permit Modification Log#: UIC-143-M-2	10/30/2009	11/02/2010
Revised Modification Application (in entirety)	06/03/2010	06/04/2010
Revisions to 06/03/2010 application	11/12/2010	11/15/2010
Geophone Well closure cost estimate	01/05/2011	01/06/2011
Permit Modification Log#: UIC-143-M-3		
Geophone Well Completion Report	04/05/2010	04/06/2010
CCS1 Well Completion Report	05/05/2010	05/07/2010
CCS1 Well Completion Report Supp. 1	05/16/2011	05/18/2011
CCS1 Well Completions Report Supp. 2	07/08/2011	07/12/2011
Verification Well 1 Completion Report	08/01/2011	08/03/2011
CCS1 Well Completion Report Supp. 3	09/26/2011	09/28/2011
Monthly Reporting of Data, Weekly Averages	10/05/2011	10/07/2011
CCS1 Well Completion Report Supp. 4	10/18/2011	10/20/2011
CCS1 & VM1 Well MIT Report	11/01/2011	11/02/2011
Permit Modification Log#: UIC-143-M-5	03/20/2012	03/27/2012

KL
SFN:KL:kl\1150155136-UIC-UIC143M5.docx