Improved DC Gun and Insulator Assembly

Final Report for Project starting 07/20/2009, ending 04/19/2010

Small Business: Muons, Inc.
552 N. Batavia Ave.
Batavia, IL 60510

Muons, Inc. PI**:** Michael Neubauer

Research Institution: Thomas Jefferson National Accelerator Facility
12000 Jefferson Ave.
Newport News, VA 23606

Research Inst. PI: Dr. Matt Poelker

Approved for public release; further dissemination unlimited. (Unclassified Unlimited)

PREPARED FOR THE UNITED STATES

DEPARTMENT OF ENERGY

Work Performed Under grant DE-SC0002684

DISCLAIMER

This report was prepared as an account of work sponsored by an agency of the United States Government. Neither the United States Government nor any agency thereof, nor any of their employees, nor any of their contractors, subcontractors or their employees, makes any warranty, express or implied, or assumes any legal liability or responsibility for the accuracy, completeness, or any third party's use or the results of such use of any information, apparatus, product, or process disclosed, or represents that its use would not infringe privately owned rights. Reference herein to any specific commercial product, process, or service by trade name, trademark, manufacturer, or otherwise, does not necessarily constitute or imply its endorsement, recommendation, or favoring by the United States Government or any agency thereof or its contractors or subcontractors. The views and opinions of authors expressed herein do not necessarily state or reflect those of the United States Government or any agency thereof.

ABSTRACT

Many user facilities such as synchrotron radiation light sources and free electron lasers rely on DC high voltage photoguns with internal field gradients as high as 10 to 15 MV/m. These high gradients often lead to field emission which poses serious problems for the photocathode used to generate the electron beam and the ceramic insulators used to bias the photocathode at high voltage. Ceramic insulators are difficult to manufacture, require long commissioning times, and have poor reliability, in part because energetic electrons bury themselves in the ceramic causing a buildup of charge and eventual puncture, and also because large diameter ceramics are difficult to braze reliably. The lifetimes of photo cathodes inside high current DC guns exhibiting field emission are limited to less than a hundred hours. Reducing the surface gradients on the metals reduces the field emission, which serves to maintain the required ultrahigh vacuum condition.

A novel gun design with gradients around 5 MV/m and operating at 350 kV, a major improvement over existing designs, was proposed that allows for the in-situ replacement of photo cathodes in axially symmetric designs using inverted ceramics. In this project, the existing JLAB CEBAF asymmetric gun design with an inverted ceramic support was modeled and the beam dynamics characterized. An improved structure was designed that reduces the surface gradients and improves the beam optics. To minimize the surface gradients, a number of electrostatic gun designs were studied to determine the optimum configuration of the critical electrodes within the gun structure. Coating experiments were carried out to create a charge dissipative coating for cylindrical ceramics. The phase II proposal, which was not granted, included the design and fabrication of an axially symmetric DC Gun with an inverted ceramic that would operate with less than 5 MV/m at 350 kV and would be designed with an in-situ replaceable photo-cathode.

Table of Contents

ABSTRACT **2**

FINAL REPORT **4**

Project Overview **4**

Tasks from original Phase I Proposal **7**

Computer modeling and brazing experiments 7

Charge dissipative coating experiments 7

New tasks identified by new JLAB PI **10**

The existing design 10

Corona shield on existing design 11

Optimum diameter of the gun electrode 13

Cylindrical Electrode design 13

Spherical Electrode with corona ring 15

Symmetrical gun designs with an inverted ceramic support. 16

CONCLUSIONS **19**

REFERENCES **20**

Appendix I - IPAC10 IMPROVED DC GUN INSULATOR ASSEMBLY **21**

FINAL REPORT

Project Overview

It is very important to prolong the operating lifetime of high-gradient DC photoguns used at facilities such as the Cornell ERL Injector, Daresbury VUV-FEL, and JLAB's CEBAF and FEL facilities. Each of these facilities has experienced reduced operations due to field emission, which has often caused catastrophic failure of the ceramic insulator used to bias the photocathode. The low reliability of the photogun and resulting downtime of the injector significantly increase the operating costs of synchrotron radiation light sources and free electron lasers.

To improve the reliability and function of high gradient DC guns the ceramic insulators holding off the operating voltage from ground require special handling, design, and processing. As it stood, these insulators were difficult to manufacture, require long commissioning times, and having poor reliability, in part because energetic electrons bury themselves in the ceramic causing a buildup of charge and eventual puncture, and also because large diameter ceramics are difficult to braze reliably. These problems were well documented: the gun assemblies at ERLP have had problems with vacuum seal leaks after cool down from a bakeout [1]. In a previous year, Jefferson Lab had three failures: one HV seal leak and two punctured ceramics [2]. Additionally, assembly processes by the manufacturer have resulted in some failures of the copper weld ring flanges to the bulk resistive ceramics [3].

After this STTR grant (Phase I) was awarded, the FEL injector group with whom we had originally collaborated announced that they had already found a solution for their large bore ceramic insulator problems. We then took it upon ourselves to find a similar gun group at JLAB who would work with us. As it turned out, the JLab CEBAF gun group was approaching their gun problems differently. They were pursuing an inverted ceramic gun design as the solution to their MTBF problems with the photoguns. Since the JLab CEBAF group had immediate needs, we took the opportunity to work with them and negotiated a new work plan that emphasized the inverted ceramic gun design described in more detail below. (We were pleased to discover that, fortuitously, the inverted ceramic gun design has widespread commercial applications in the microwave tube industry.) So, instead of finding new process techniques to improve the reliability of large bore bulk resistive ceramics, we determined design criteria for developing an inverted cone ceramic for making reliable high gradient DC guns.

The ceramic coating element of the original STTR was kept in place because it still has wide spread applications for charge dissipation and for commercialization.

Technical Approach

At the present time, a number of groups worldwide are working on very high DC-voltage (>300 kV) GaAs-based photoguns including JLab FEL, Cornell University, Daresbury and

JAEA/KEK. Current developmental efforts to improve on traditional large bore ceramic insulators include the following three strategies:

- Strategy 1. An "inverted" ceramic insulator that extends into the gun high voltage chamber. This approach does not require a large electrode support structure and therefore reduces the number of high gradient regions inside the gun that contribute to field emission.
- Strategy 2. Insulators with bulk resistivity (emphasized in the Phase I proposal for this project) which serve to bleed-off electrons that accumulate within the ceramic insulator, due to field emission
- Strategy 3. Segmented insulators with metal shields that eliminate line-of-sight from the biased cathode electrode and support structure to the ceramic insulator. This strategy, being pursued at JAEA, will not be discussed further in this document.

The last two strategies do not attempt to eliminate field emission, but rather strive to develop means to continue operation of the photogun when field emission is present. In contrast, the first strategy strives to develop a photogun that is less susceptible to damage from field emission and also strives to eliminate field emission directly, by removing the massive electrode support structure that passes through the bore of the large cylindrical ceramic insulators used on all other photogun designs. Specifically, this is accomplished by using an "inverted" ceramic insulator that extends into the gun high voltage chamber as shown in *Figure 1*. The inverted insulator approach does not require a large electrode support structure and therefore reduces the number of high gradient regions inside the gun that contribute to field emission. And it means there is less metal to polish, and less material that can contribute to field emission. Eliminating field emission protects the gun from damage, and equally important, preserves the vacuum inside the gun which prolongs operating lifetime.

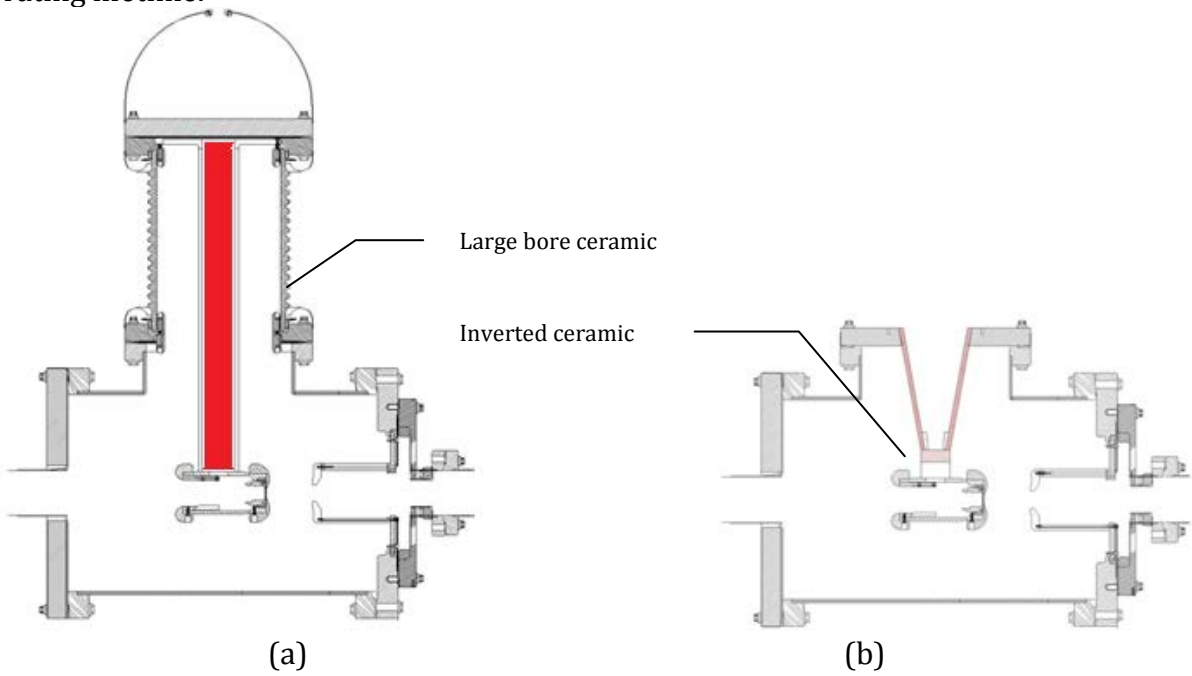

Figure 1: Drawings showing the difference between (a) a gun with the standard large bore ceramic, and (b) a gun with the inverted ceramic [4].

Strategy 2 addresses the bleed-off of energetic electrons to ground before there is sufficient charge buildup to puncture the ceramic. Additional manufacturing issues exist as a result of brazing connecting flanges to lossy bulk ceramics that are able to withstand bakeout temperatures. New large bore ceramic assemblies have been constructed by CPI with a "bookend" braze or "backing ceramic", as we suggested in our Phase I proposal, and delivered to Cornell [6]. However, to create the same charge dissipating feature, we continued our development of a thick resistive coating to be applied to standard large bore ceramics whose braze joint is not at issue. The work and results are discussed below.

We considered our R&D program as complimenting that of other groups pursuing gun designs with conventional large bore ceramic insulators, and expected these other groups to be supportive of this effort (i.e., the inverted insulator approach is widely considered a valid R&D path but not actively pursued elsewhere because resources are limited).

The intended Phase II work would have centered around the construction details of braze joints while implementing the inverted ceramic concept at 350 kV including the high voltage connection, suppression of field emission, the design of an *in situ* replaceable photocathode, and continued coating experiments.

Changes in Project Design

Since the granting of this Phase 1 proposal, there had been noted progress by other groups developing large bore ceramic insulators with bulk resistivity, and segmented insulators [6]. Therefore, it seemed wise to modify the scope of the original proposal, to deemphasize thick resistive coatings, and to focus more on the inverted insulator design. The "inverted" ceramic insulator design (as mentioned above) has the added benefit of preserving the necessary UHV environment inside the gun, because it reduces field emission. In contrast, the other approaches merely tried to make the gun less susceptible to damage from field emission.

JLab and Muons, Inc. made a joint decision to make some changes in the focus of the project, and to concentrate on the CEBAF 100kV inverted gun and identify improvements that would provide a means to achieve > 350kV bias voltage.

A number of design options were considered, and each option was studied through computer simulations. These simulations are described in detail in the Results section.

Although the coating endeavor, originally-planned for Phase I, was curtailed, significant Phase I experimental studies were carried out on layers of insulators exhibiting bulk resistivity, and the results of these investigations are discussed in detail in the following section of this report. Those results suggested we were on the right path, even though they did not constitute the demonstration of a complete solution.

Phase I Results

This section describes the results of the Phase I work on this research project. Note that the project goals were modified during the project, because of the technical progress made at JLab concerning the inverted ceramic gun design. These changes are described in the preceding section of this proposal. These results were presented at IPAC10 [5]. Appendix I contains that contribution.

1. Tasks from original Phase I Proposal.
    a. Computer modeling of large bore "black" ceramic support structure.
        i. ANSYS calculations to minimize mechanical stress.
    b. Brazing experiments for stress free flange design
    c. Charge dissipative coating. experiments.
2. New tasks identified by new JLAB PI.
    a. Computer modeling of "inverted" gun electrostatics.
        i. Calculations to minimize field gradients.
            1. Beam quality.
    b. Charge dissipative coating experiments

Tasks from original Phase I Proposal

Computer modeling and brazing experiments

We did not proceed with any computer modeling of the seal ring design beyond what was shown as part of the Phase I proposal, nor did we do any brazing experiments. As noted in the most recent summary of the DC Gun Technological Challenges from ERL09, a 14" unit was brazed up by CPI and delivered to Daresbury. The braze joint was a "book-end" style braze joint [6] identical to the concept presented in our Phase I proposal and described as a "backing ceramic".

There is evidence this type of seal will work, however, the braze joint to the WESGO970CD may still be an issue and should be treated with caution. The use of a buffer material such as thick copper plating on the flange is still highly recommended.

Charge dissipative coating experiments

We performed several different coating experiments using a glass and nichrome powder mixture. These types of mixtures have been used for thick film resistors [7], our application was to make a resistive coating that was on the order of 1-2 mm thick.

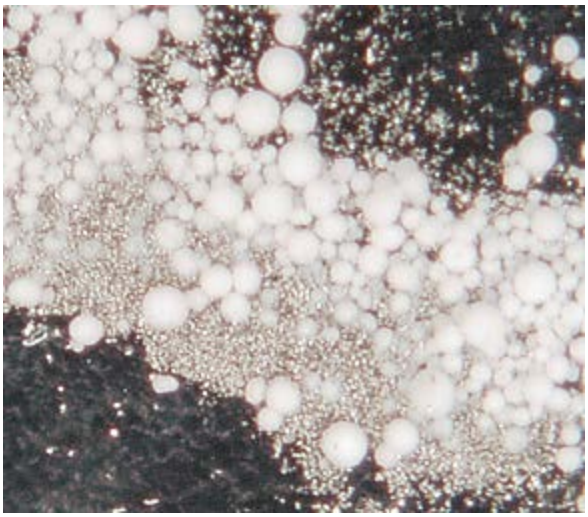

Figure 2 Photo Micrographs of the mixture of nichrome and glass. The glass powder is the large white particles, the nichrome is the smaller particles, the black is the slide background.

As shown in *Figure* 2, the glass powder is approximately 20 to 50 times larger than the nichrome powder. Two different types of glasses were tested, and one turned out to work quite well with regards to adhesion to alumina. That glass was material #88 from Elan Technologies [8], which is a glass designed to adhere to Kovar.

To determine the correct process variables, we created alumina test trays and "Tee" shaped electrodes as shown in Figure 3. Several different compositions of the glass-nichrome mixture were melted at between 800 and 1000 °C in air.

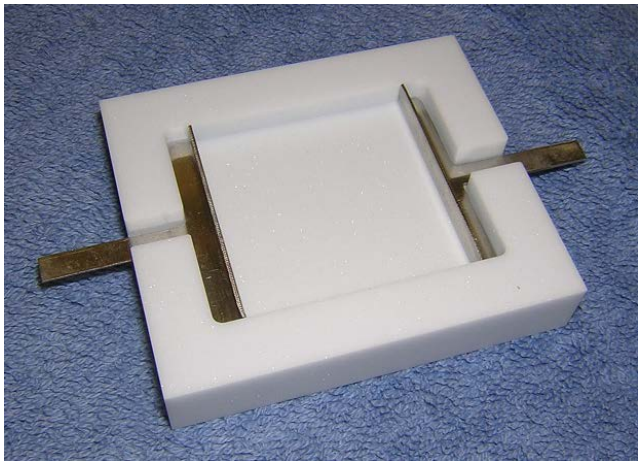

Figure 3: An Alumina test tray with "Tee" electrodes. The area between the electrodes is 4cm × 4cm and 5mm deep.

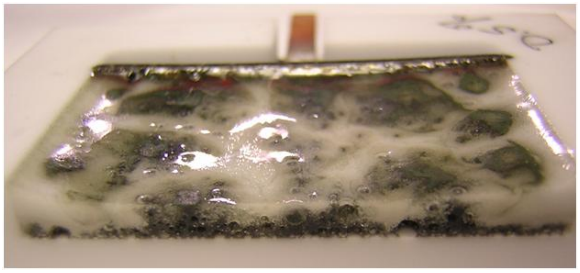

Figure 4: Cross section of a sample with .5% by weight nichrome to glass. The melted mixture is about 3 mm thick.

As shown in Figure 4, there was a significant non-uniformity in the melted mixture at the thicknesses we experimented with. The most uniform coating was about 1 mm thick. The fact that most of the nichrome power agglomerated and/or settled to the bottom during the firing process we attribute to the starting particle size difference between the two powders being too large.

In Figure 5 a close-up of the glass-nichrome mixture interface with the alumina is shown. While we did not perform specific stress tests on the interface, we did have a cross-section made by simply cutting through the test assembly. The aggressive grinding action did not damage the interface.

One of the artifacts we were warned about by Elan Technologies was the formation of bubbles in the mixture during the melting process. This was a result of the glass powder manufacturing process. Other processes can be employed by a special order for glass mixture #88 that will remove the bubbles in the glass.

The conclusion of our experiments with the resistive glass coating is that the particle size of the two powders must be more similar, and the glass itself should not create bubbles during the melting process. Further experimentation will arrive at the correct mixture of nichrome and glass.

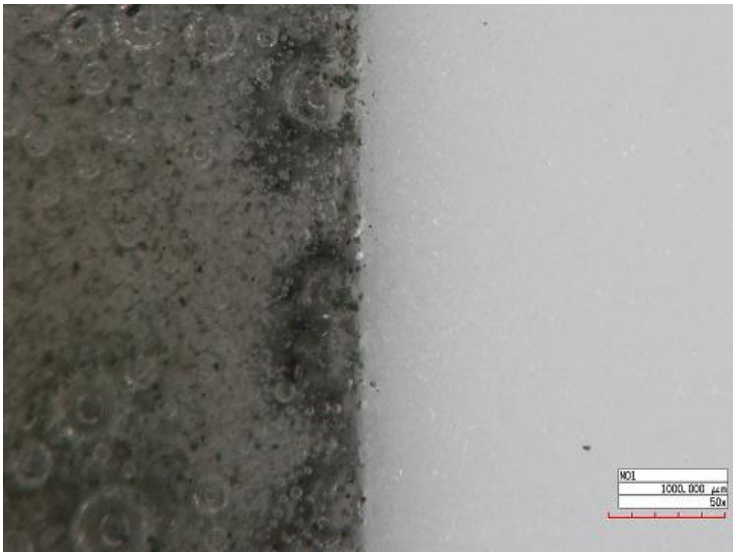

Figure 5: Magnified look at the interface between the alumina and glass-nichrome mixture.

New tasks identified by new JLAB PI

There were three design goals in the analytical work using the inverted ceramic as a baseline:

1. Using the existing configuration.
   i. Design for less than 10 MV/m at 225 kV
   ii. Measure and Improve the beam optics if necessary.
2. Using the inverted ceramic in a symmetrical configuration with the beam, determine a method for replacing the photo-cathode from the side.
3. Design an electrode that has surface gradients of less than 5 MV/m at 350 kV.

All of these goals were accomplished, as described below.

The existing design

This work builds on the earlier development at CEBAF of an inverted gun that has was in use, at the time of this project, for almost a year and was reported earlier at PRST-AB. The operational JLAB design is shown in Figure 6.

Designs with a similar asymmetric component would tend to reduce the complications and necessary changes required for possible overall improvements to the design. Therefore, the chamber, and the mechanism for exchange of the photocathode would likely remain as is. This commonality would have help to reduce time and cost for making an improvement to the design, and would allow time for more than one iteration to be fabricated and tested. (Note, for all the designs utilizing the asymmetric inverted ceramic support, the opening at the rear of the electrode is used for the exchange of the photocathode.)

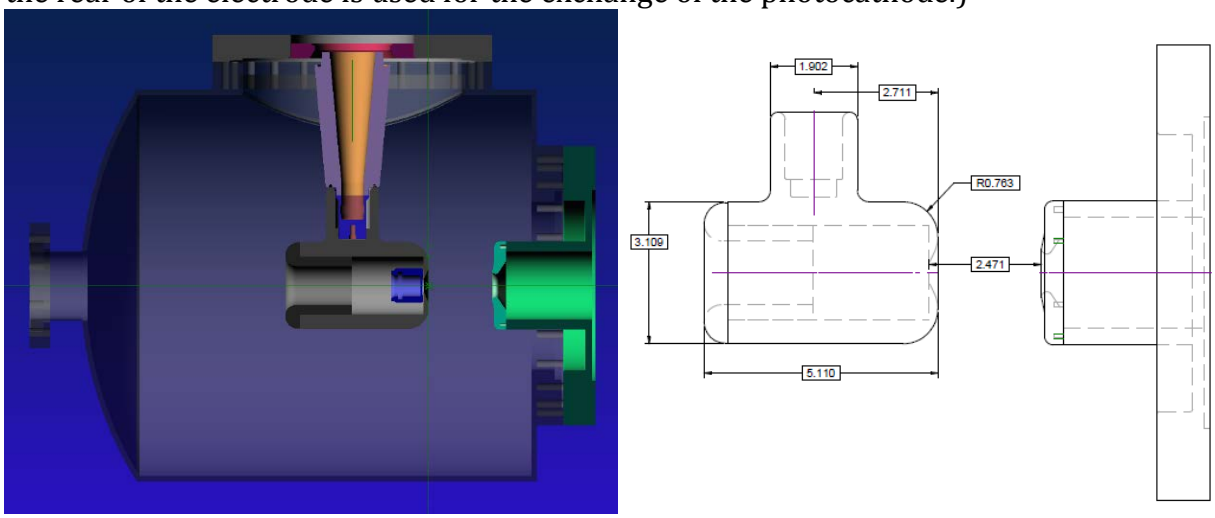

Figure 6: Shown is the present JLAB cathode, anode, inverted ceramic, and gun chamber design.

We modelled the existing JLAB CEBAF gun which uses an inverted ceramic. As noted in reference [4], the gradients at 100 kV were about 7 MV/m in the region surrounding the

location where the inverted ceramic met the gun electrode. At 250 kV this region was far in excess of 10 MV/m as shown in Figure 7.

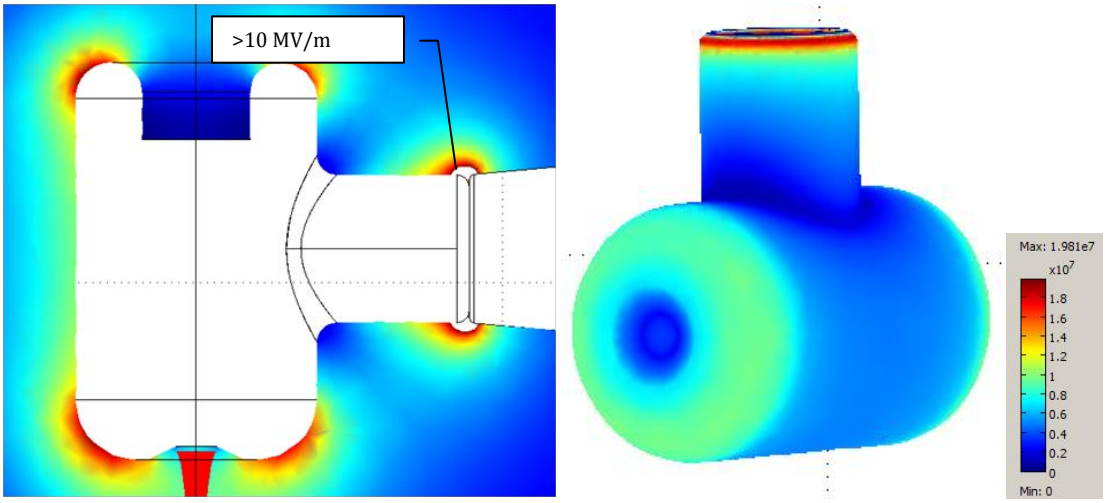

(a) (b)

Figure 7: Calculations are from Comsol 3.4a. (a) Electrostatic calculations at 250 kV showing the regions where gradients are greater than 10 MV/m, and (b) the electrode showing a maximum of about 20 MV/m at 250 kV.

Corona shield on existing design

Figure 8 and Figure 9 show simulations for a corona shield design intended to reduce the gradients and protect the triple point location.

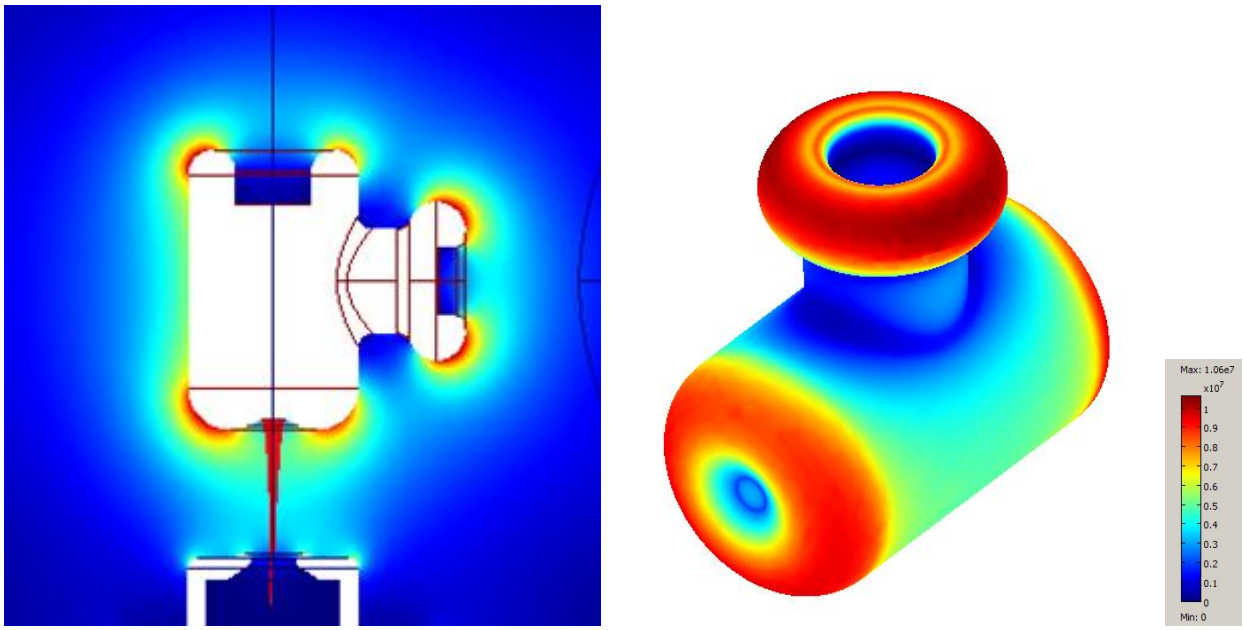

Figure 8: Added Corona shield to the electrode reduce the gradient at 250 kV to 10.6 MV/m

Figure 9 shows the design layout and pertinent dimensions for the simulation run displayed in Figure 8 above. Aside from the corona ring in the region of the inverted

ceramic joint, the remainder of the cathode electrode is identical to that of the present JLAB design shown in Figure 6.

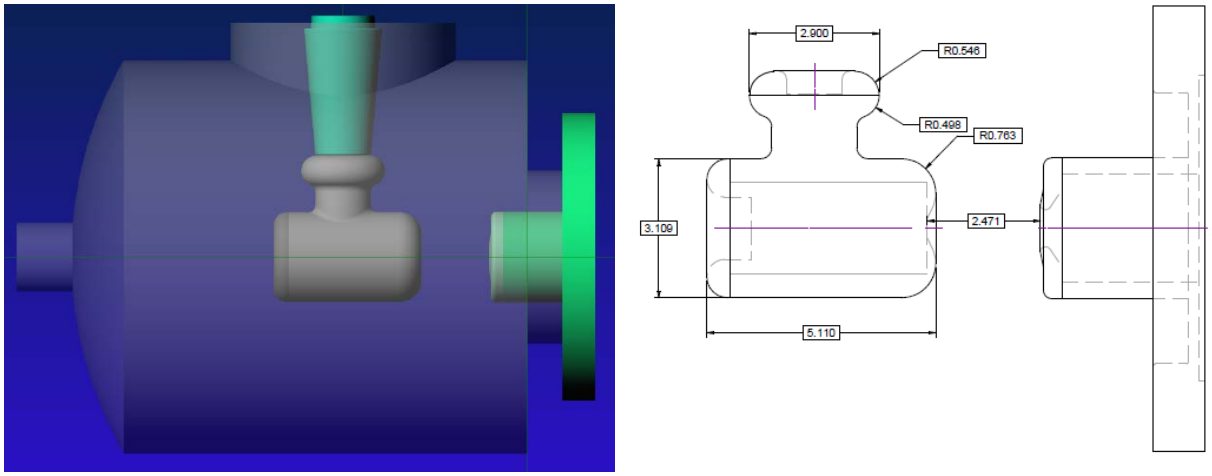

Figure 9: Shown is an identical electrode to the present JLAB design, but containing a rounded Corona Ring (of approximately 1 inch in diameter) in the region of the triple point at the junction of the inverted ceramic and the electrode.

These simulations indicated an inherent problem with non-symmetrical gun electrodes, in that they produce an asymmetrical field around the gun axis, which in turn "deflects" the beam at an angle relative to the center-line of the gun. We calculated the existing gun design to have an angle of 7.4 milliradian from the center of the photo-cathode to where it entered into the anode region, and in the design with the corona ring, the angle was slightly worse at 8.6 milliradian.

The angle was measured by using the particle tracing function within Comsol as shown in Figure 10. The arctangent was used to calculate the angle of displacement of the beam center from the center-line axis of the structure, at a specific distance from the center of the cathode.

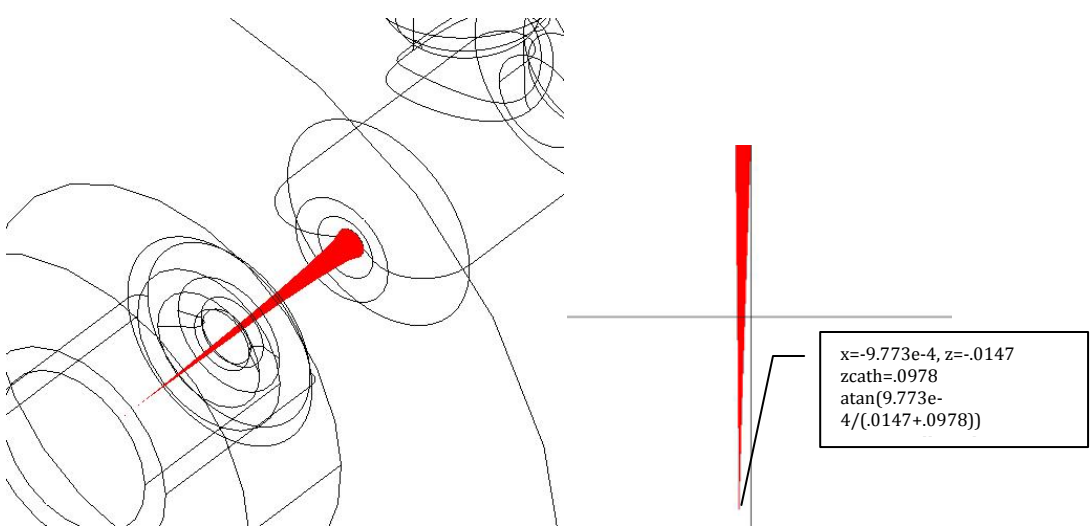

Figure 10: Comsol particle tracking function, and calculation of the beam displacement from the center-line.

Optimum diameter of the gun electrode

In general, the optimum gun electrode would be a sphere in the center of the grounded vacuum chamber. We modelled this geometry and varied the size of the sphere as shown in Figure 11. The bathtub curve shows the minimum is achieved when the diameter of the sphere is half the diameter of the can. On the left side of the bathtub curve, the surface gradient is dominated by the curvature of the ball, on the right side the surface gradient is dominated by the proximity to the chamber wall.

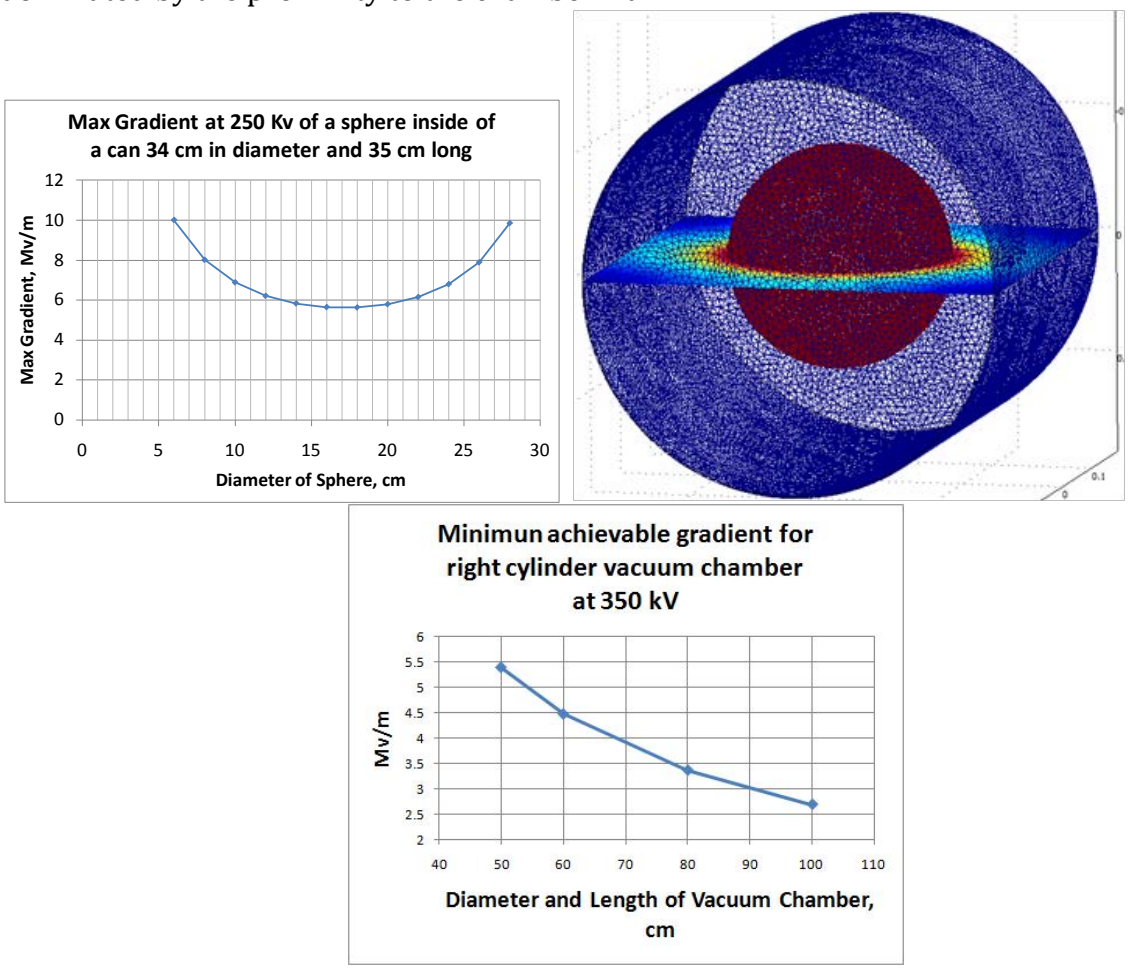

Figure 11: The minimum gradient of a sphere inside of a can is when the sphere diameter is half the diameter of the can. For the dimensions of the existing vacuum envelope, the minimum gradient that can be achieved is 5.6 MV/m at 350 kV. To get to 5 MV/m at 350 kV, a right cylinder vacuum chamber must be 55 cm in diameter. The spherical electrode would then be 27.5 cm in diameter.

Cylindrical Electrode design

This principle was utilized in our next design iteration as shown in Figure 12 and Figure 13. The maximum gradient was 8 MV/m for 250 kV, again limited by the radius of the mating parts in the region of the joint between the inverted ceramic and the gun electrode. There

was no measurable beam steering angle, as the beam was perfectly aligned on the center-line of the system.

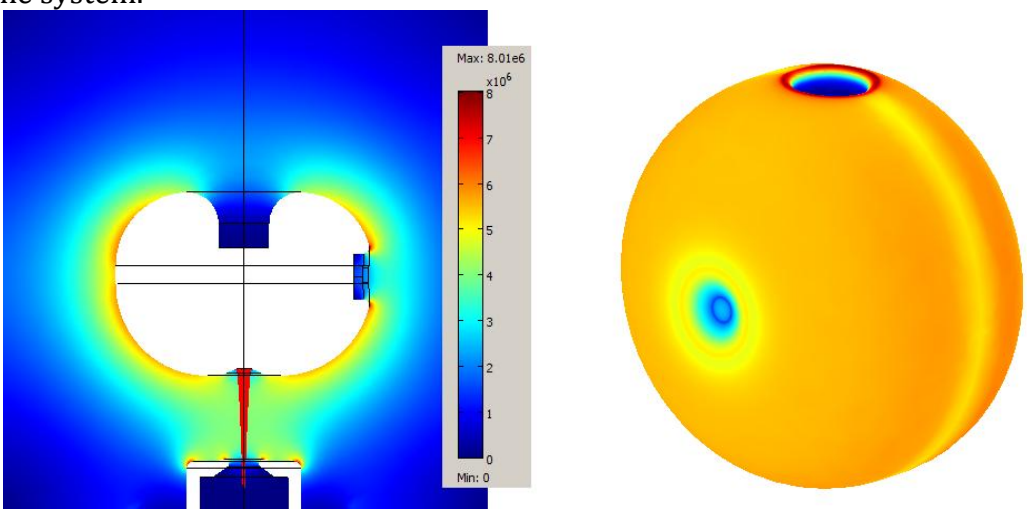

Figure 12: "Ball" type gun electrode with a side support for the inverted ceramic calculated for 250 kV. The maximum gradient was 8 MV/m and the region around the ceramic is not shielded from the max gradient.

Figure 13 shows the design layout for the "ball" type electrode geometry. This geometry was based on a cylindrical shape with rounded front (toward the anode) and rear edges. This leaves an awkward geometry in the region of the receptacle where the inverted ceramic "plugs" into the electrode. The geometry of the focus electrode portion of the electrode, in the region of the photo-emitter, is identical to that of the present JLAB design.

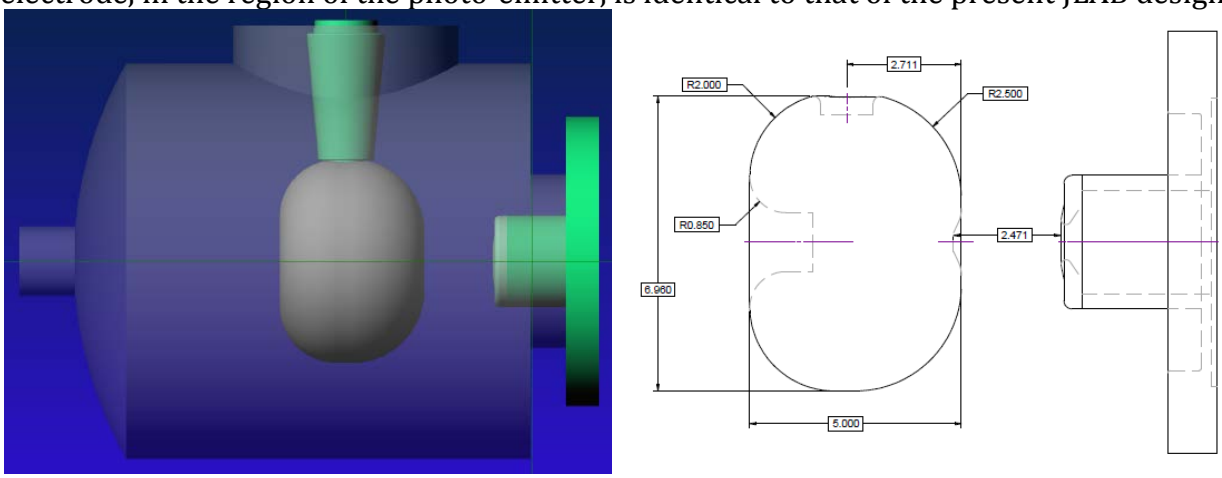

Figure 13: Shown is a "ball" cathode electrode design based on a cylindrical geometry.

Figure 14 shows an improved design on the cylindrical geometry of Figure 13. In this design the cylinder was rounded even further such that the rounded edges from the front and rear portions met. i.e. there was no "side" to the cylinder. While this improved the surface fields slightly, it complicated further the region of the receptacle for the inverted ceramic. The electrode surface in the region of the receptacle formed a complex saddle shape when the receptacle opening was made in the surface. This complex shape caused the interface between the electrode and the Molybdenum hat of the inverted ceramic to be non-uniform.

Also for this case, the anode was redesigned to have a rounded shaped similar to the cathode electrode yet maintain the present JLAB geometry in the area of the nose.

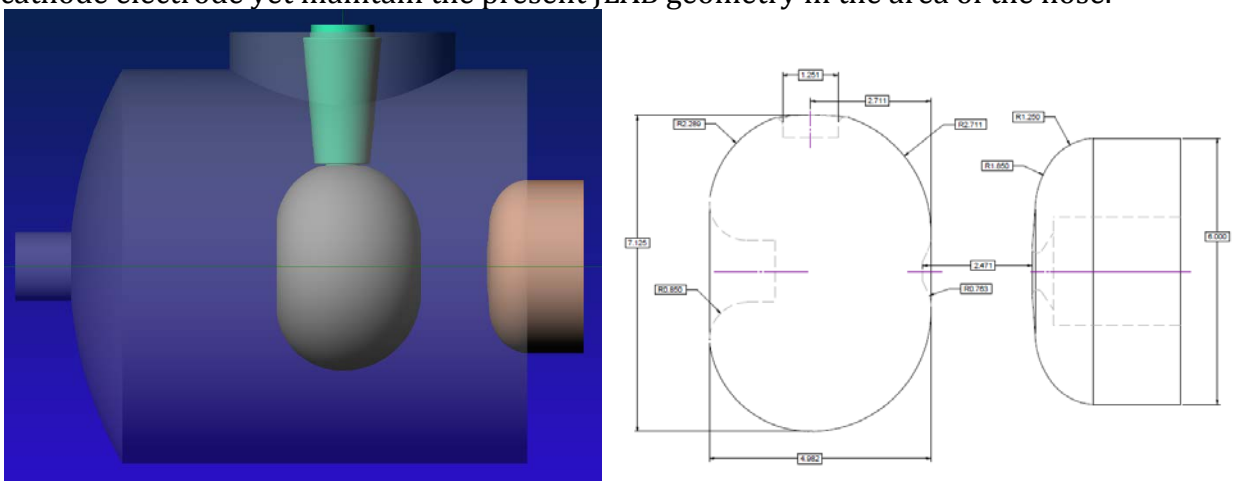

Figure 14: Shown is an improved cylindrical design over that of Figure 13, and an improved anode design.

Spherical Electrode with corona ring

While the cylindrical "ball" designs yielded improvements in surface fields, there remained the issue of the field strength in the region of the inverted ceramic / electrode union. Similar to what was modelled on the then current JLAB design, a corona ring was designed for the "ball" style of electrode. In addition, to relieve the complicate geometry in the receptacle region, the overall geometry of the electrode was changed from cylindrical to spherical. The anode design was simplified in the "shoulder" area away from the nose region. Figure 15 shows this design and the simulation results are shown in Figure 16.

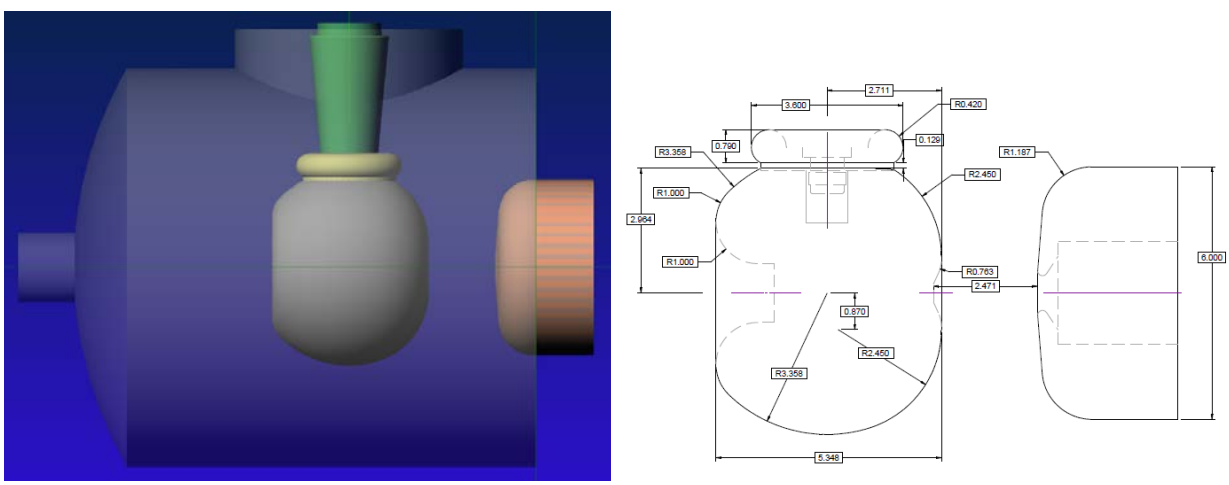

Figure 15: Spherical electrode design with Corona Ring, and simplified "rounded" anode design.

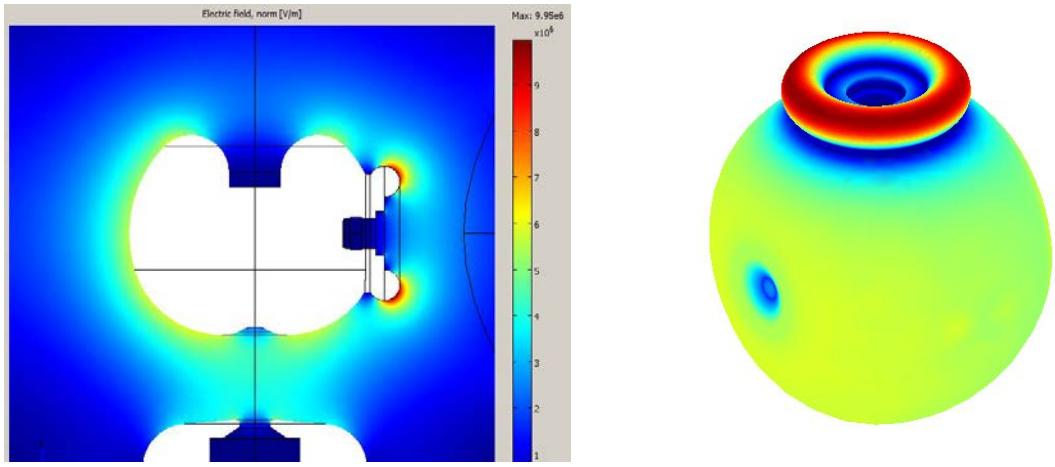

Figure 16: The ball shape electrode has a corona ring to move the high gradients away from the triple junction point. The Max gradient is 9.95 MV/m at 250 kV.

The corona ring that protects the triple junction location of the ceramic also produced a slight deflection of the beam calculated to be 0.6 milliradian as it enters the anode region. Far less than the 7.4 milliradian deflection of the then current JLAB design. The gradients in the region of the triple junction were 3.2 MV/m at 250 kV.

Symmetrical gun designs with an inverted ceramic support.

While the asymmetric designs discussed above were able to reduce the surface field strength and provide commonality with the then current JLAB design, they all still retained the problem of producing non-symmetric fields to the electron beam. To remove the asymmetries it would have been necessary to reposition the HV input, and thus the inverted ceramic connection to the cathode electrode, from the side to the rear of the electrode. Unfortunately, such a design change would have involvef a significant number of other changes to the chamber and the mechanism for exchanging the photo-emitter. A possible design based on the then current JLAB electrode is shown below. This initial design is shown in Figure 17 and the electrostatic run is shown in Figure 18.

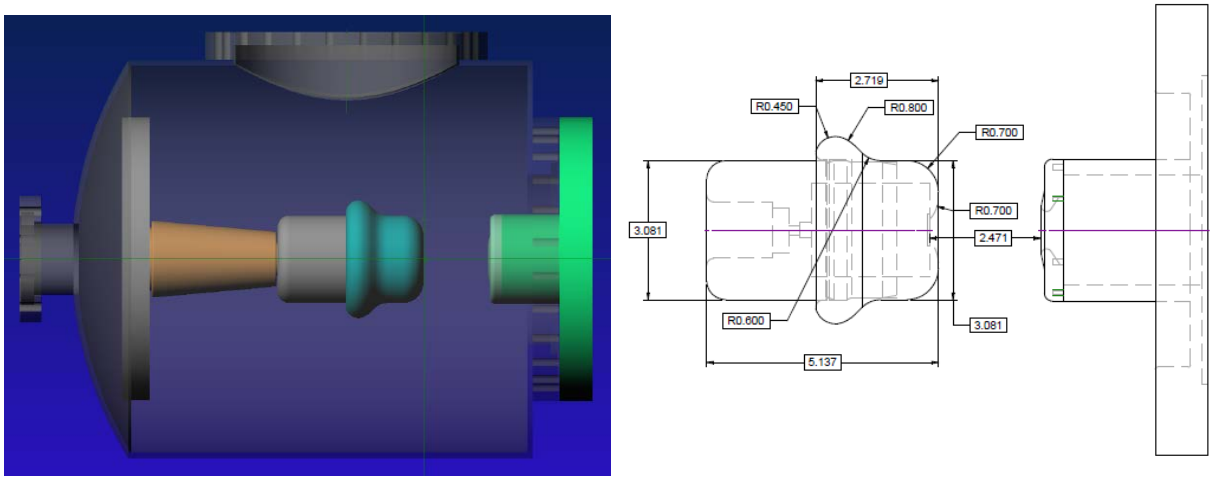

Figure 17: Shown is a possible "rear" HV connection design, based on the then current JLAB cathode electrode and anode design.

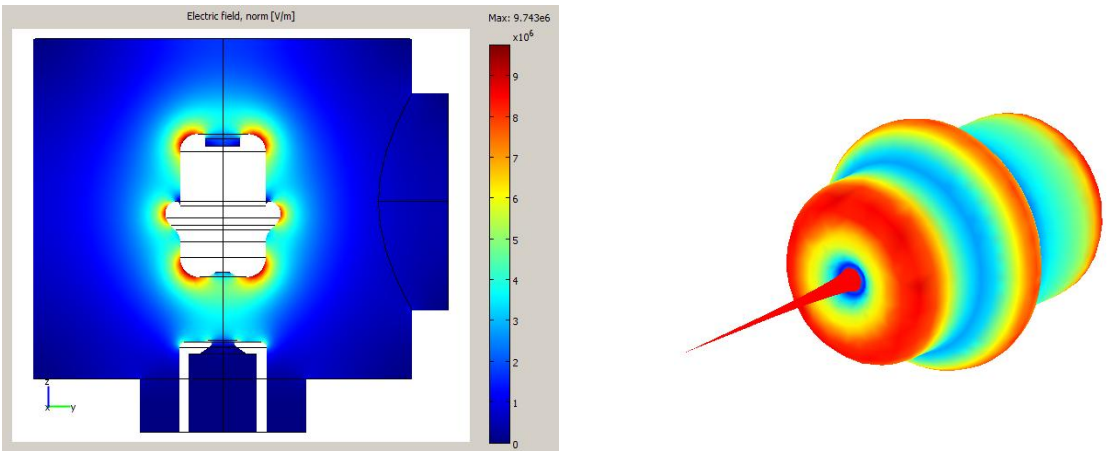

Figure 18: Electrostatic results of the symmetrically supported gun with an inverted ceramic. The max gradient is 9.74 MV/m at 250 kV. Note the region where the replaceable section is located mated to the stationary part is shielded by the corona ring.

As can be seen, changes to the rear of the chamber would be needed to accommodate a support flange for the inverted ceramic. Additionally, the side port which provided the HV input would likely have been moved forward to allow proper motion for a mechanism to exchange the photocathode.

In this type of design more than just the photocathode holder (dark blue in the figure) would be exchanged. Figure 19 shows some details of such a design.

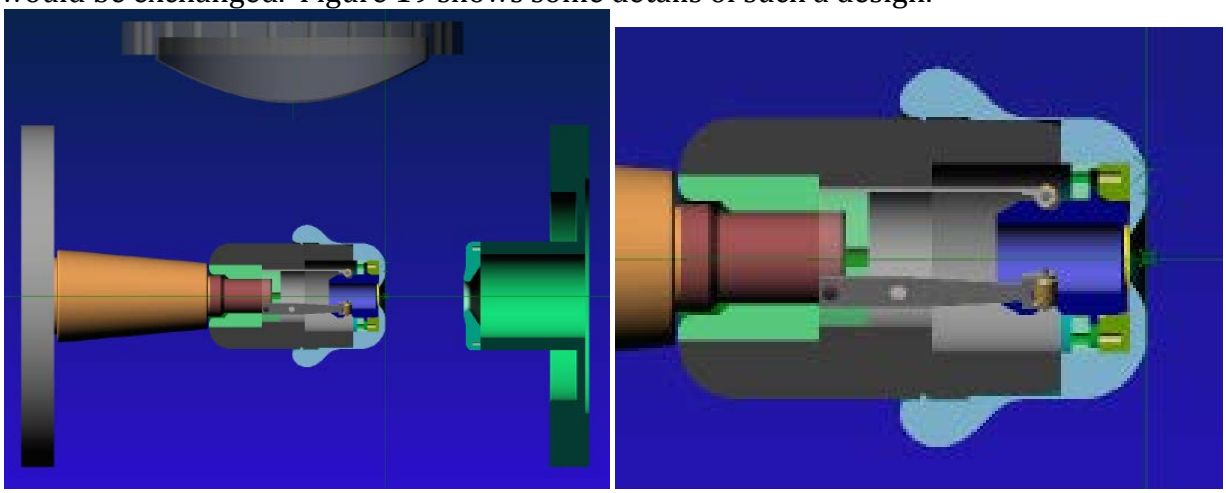

Figure 19: Shown are details of the cathode electrode for rear attachment of the ceramic. In this concept the entire front portion of the electrode would have been removed for photocathode exchange.

The photocathode holder would be firmly attached to the forward "mushroom cap" (MC) portion of the electrode (shown in light blue in the figure). When exchanging the photo-emitter the entire MC would have been removed and replaced via the port in the side of the chamber. The figure shows the familiar JLAB concept of spring tensioned rollers positioning the cathode holder, but in this design the holder would have been modified such that the rollers provide tension to pull the MC firmly onto the rear assembly (shown in

gray in the figure) of the electrode, which is permanently attached to the inverted ceramic via the Moly Hat (shown in maroon in the figure). In addition, the outer portion of the cap could have contained a "bead" which is captured by a groove on the outer diameter of the rear electrode assembly. The advantage of a design that exchanged more than just the holder was that it could have been made such that there were no visible "edges" on the electrode for field enhancement issues.

While this conceptual design is shown for the geometry of the then current JLAB electrode shape, it could have been incorporated into the "ball" type of electrodes, discussed previously, thus utilizing their significant improvement in surface field.

Shown below is a concept for the removal and exchange of the photocathode for a rear mounted electrode. Note, the photocathode and holder are contained within the mushroom cap assembly, which would be completely removed from the cathode electrode for photocathode exchange.

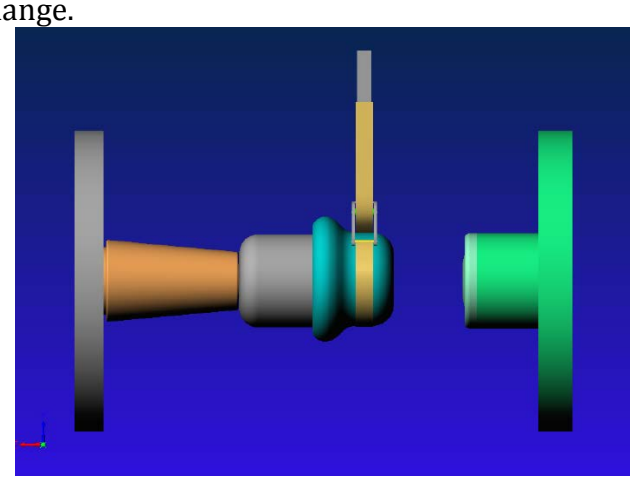

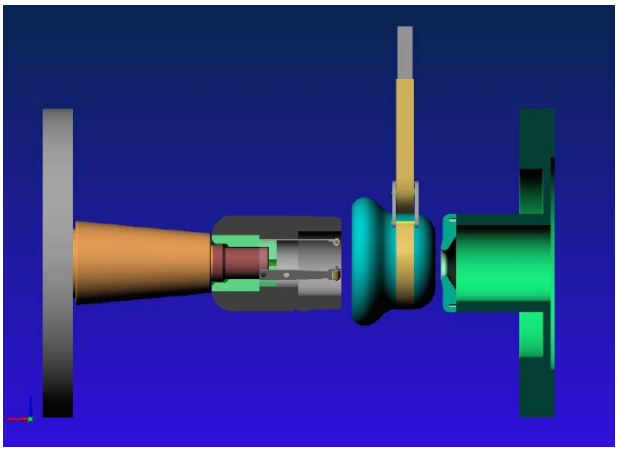

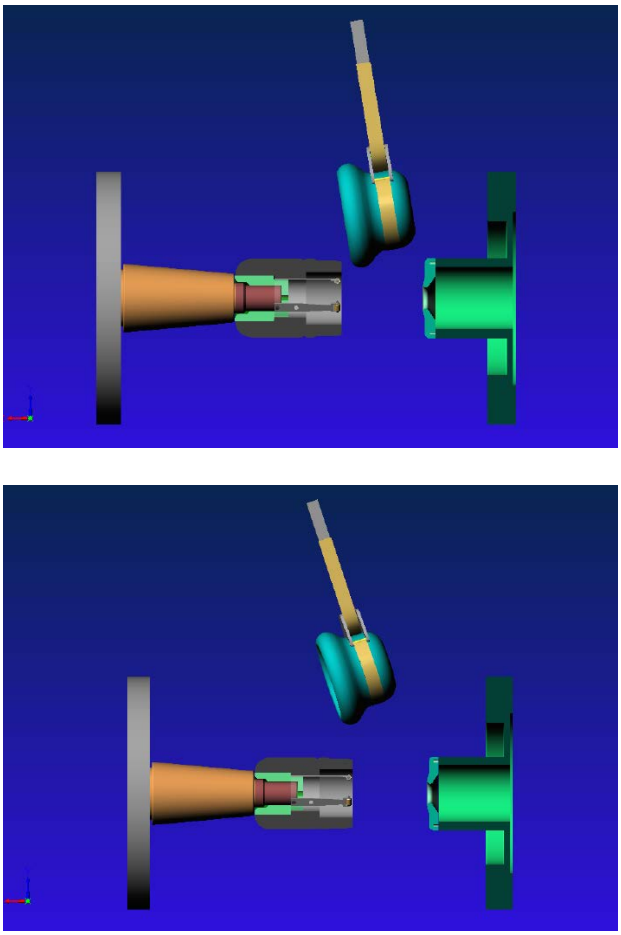

Figure 20: The figure demonstrates the removal of the forward portion of the cathode electrode, such as would be done for photocathode exchange.

CONCLUSIONS

Low gradient gun designs have applications in high power microwave tubes, X-ray tubes as well as various types of accelerator sources. Charge dissipative coatings may still have significant impact on devices that utilize ferrites and ceramics in the presence of charged particles.

The charge dissipative coating developed here showed excellent promise as it adhered well to the ceramic and needs further experiments to perfect the process.

The design criteria for a 350 kV DC gun operating with gradients less than 10 MV/m was demonstrated. An in-situ photo-cathode replacement design was made and needs further improvements.

REFERENCES

[1] D.J.Holder, N.Bliss, J.A.Clarke, P.A.McIntosh, M.W.Poole, E.A.Seddon, and S.L.Smith; "The Status of the Daresbury Energy Recovery Prototype Project"; Presented at the Tenth European Particle Accelerator Conference (EPAC06), Edinburgh, UK, 26-30 June, 2006

[2] C. Hernandez-Garcia; "Status of Jefferson Lab FEL high voltage photoemission guns"; Workshop on Sources of Polarized Electrons and High Brightness Electron Beams, Jefferson Lab, Newport News, VA, USA, October 1-3 2008

[3] David Stone; "Shaping Electrostatic Conditions in the Stalk of the ERL -750 kV Electron Gun"; August 7, 2008

[4] J. Grames and M. Poelker, "CEBAF Load-Lock Polarized Electron Photogun", EIC08

[5] R. Sah, M. Neubauer, A. Dudas, M. Poelker, K. Surles-Law, IMPROVED DC GUN INSULATOR ASSEMBLY, IPAC10. http://accelconf.web.cern.ch/AccelConf/IPAC10/papers/tupec019.pdf

[6] N. Nishimori, et. al., "ERL09 WG1 SUMMARY: DC GUN TECHNOLOGICAL CHALLENGES",

[7] Patent 5667554, Issued September 16, 1997 to CTS Corporation. "Process of producing a low TCR surge resistor using a nickel chromium allow"

[8] Elan Technologies, PO Box 779, Midway, GA 31320, United States (912)880-3526, (912)880-3000 fax, http://www.elantechnology.com

IMPROVED DC GUN INSULATOR ASSEMBLY*

R. Sah, M. Neubauer, A. Dudas, Muons, Inc., Batavia IL
M. Poelker, K. Surles-Law, JLab, Newport News VA

Abstract

Many user facilities such as synchrotron light sources and free electron lasers require accelerating structures that support electric fields of 10-15 MV/m, especially at the start of the accelerator chain where ceramic insulators are used for very high gradient dc guns. These insulators are difficult to manufacture, require long commissioning times, and often exhibit poor reliability. Two technical approaches to solving this problem will be investigated. Firstly, inverted ceramics offer solutions for reduced gradients between the electrodes and ground. An inverted design will be presented for 350 kV, with maximum gradients in the range of 5-10 MV/m. Axial symmetry is important to minimize emittance growth of the beam, but the replacement of the photo-cathode, in a gun with an inverted ceramic base, presents a significant mechanical engineering problem. Also, any field emission at all from the gun will ionize gases and poison the cathode. Secondly, novel ceramic manufacturing processes will be studied, in order to protect triple junction locations from emission, by applying a coating with a bulk resistivity. The processes for creating this coating will be optimized to provide protection as well as be used to coat a ceramic with an appropriate gradient in bulk resistivity from the vacuum side to the air side of an HV standoff ceramic cylinder. Example insulator designs are being studied through computer modeling, and insulator samples are being manufactured and tested.

INTRODUCTION

It is very important to prolong the operating lifetime of High gradient DC photoguns used at facilities such as the Cornell ERL Injector, Daresbury VUV-FEL, and JLab's CEBAF and FEL facilities. Each of these facilities has experienced reduced operations due to field emission, which has often caused catastrophic failure of the ceramic insulator used to bias the photocathode. The low reliability of the photogun and resulting downtime of the injector significantly increase the operating costs of synchrotron radiation light sources and free electron lasers.

TECHNICAL APPROACH

At the present time, the development of very high DC-voltage (> 300kV) GaAs-based photoguns is being carried out by a number of groups worldwide, including JLab, Cornell, Daresbury and JAEA/KEK. Current developmental efforts to improve on traditional large bore ceramic insulators include the following strategies:

- Strategy 1. An "inverted" ceramic insulator that extends into the gun high voltage chamber.
- Strategy 2. Insulators with bulk resistivity which serve to bleed-off field-emission electrons that accumulate within the ceramic insulator.

Strategy 1 consists of the development of a photogun with an "inverted" ceramic insulator that extends into the gun high voltage chamber. The inverted insulator approach does not require a large electrode support structure and therefore reduces the number of high gradient regions inside the gun that contribute to field emission. This current work builds on the earlier development at CEBAF of an inverted gun that has already been in use for almost a year [1].

Strategy 2 addresses the bleedoff of energetic electrons to ground before there is sufficient charge buildup to puncture the ceramic. Additional manufacturing issues developed as a result of brazing connecting flanges to the lossy bulk ceramics that can withstand bakeout temperatures. New large bore ceramic assemblies have been constructed by CPI with a "bookend" braze or "backing ceramic" and have been delivered to Cornell [1]. However, to provide the same charge dissipating feature, we have continued our development of a thick resistive coating to be applied to a standard, large-bore ceramic insulator whose braze joint is not at issue.

STUDIES OF INVERTED CERAMIC INSULATOR DESIGN

The existing design

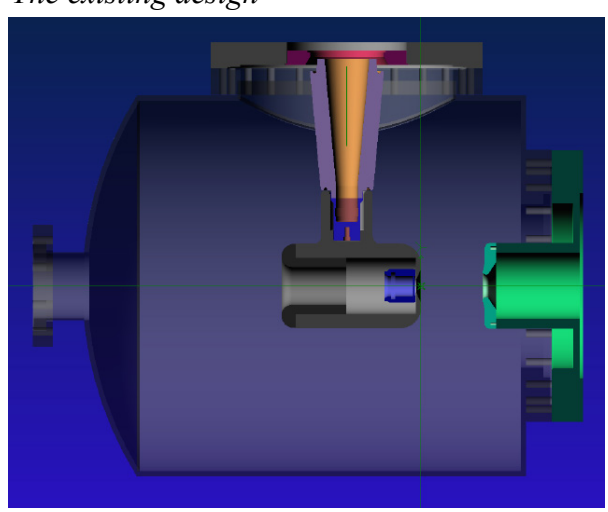

Figure 1: The existing JLab gun design.

In this paper, we describe an extension of the earlier development at CEBAF, the goal being to reduce field emission at gun voltages considerably higher than the 100 kV achieved in the current CEBAF design. The inverted gun design represents a reasonable R&D program that

* Supported in part by USDOE Contract No. DE-AC05-84-ER-40150 and STTR Grant DE-SC0002684

complements the bulk resistivity approach and the segmented insulator approach now being pursued at other laboratories.

We modelled the existing JLAB CEBAF gun which uses the inverted ceramic. At 250 kV the region where the inverted ceramic is attached to the gun electrode has electrical gradients far in excess of 10 MV/m. The reason for the non-symmetrical support is to allow photocathode replacement through the back of the gun electrode through a load-lock system. The problem with this non-symmetrical gun electrode is that it produces an asymmetrical field around the gun axis, which in turn deflects the beam at an angle relative to the center-line of the gun. For the existing gun design, we calculated that the beam would be deflected 7.4 milliradians, as it travels from the center of the photo-cathode to the anode region (neglecting space charge forces).

Optimum diameter of the gun electrode

In general, the optimum gun electrode would be a sphere in the center of the grounded vacuum chamber. We modelled this geometry and varied the size of the sphere. The bathtub curve of Figure 2 shows the minimum is achieved when the diameter of the sphere is half the diameter of the can. On the left side of the bathtub curve, the surface gradient is dominated by the curvature of the ball, on the right side the surface gradient is dominated by the proximity to the chamber wall.

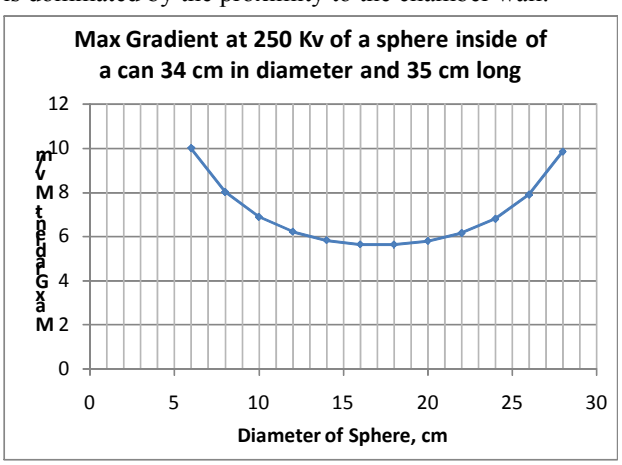

Figure 2: The minimum gradient of a sphere inside of a can is when the sphere diameter is half the diameter of the can.

Spherical Electrode with corona ring

The best design for the non-symmetrical support of the gun electrode in the vacuum chamber is a sphere, with the region around the triple junction being protected with a corona ring and the region in the back of the gun optimized for replacing the photocathode.

The corona ring that protects the triple junction location of the ceramic also produces a slight deflection of the beam, calculated to be 0.6 milliradians as it enters the anode region. The gradients in the region of the triple junction are 3.2 MV/m at 250 kV.

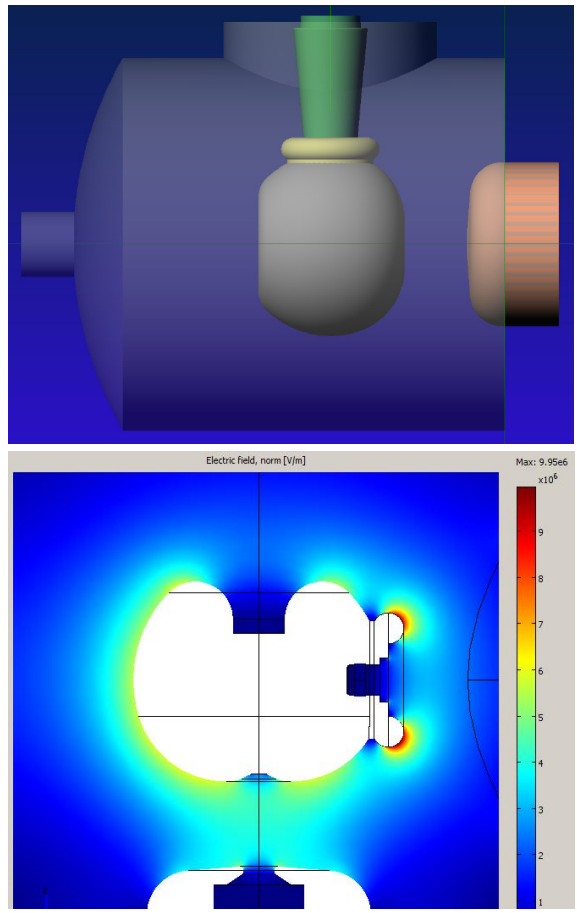

Figure 3: The ball shaped electrode has a corona ring to move the high gradients away from the triple junction point. The maximum gradient is 9.95 MV/m at 250 kV.

CHARGE DISSIPATIVE COATING EXPERIMENTS

We performed several different coating experiments using a glass and nichrome powder mixture. These types of mixtures have been used for thick film resistors [2]. Our goal was to make a resistor that is on the order of 1-2 mm thick with resistance in the 10^9 ohm-cm range.

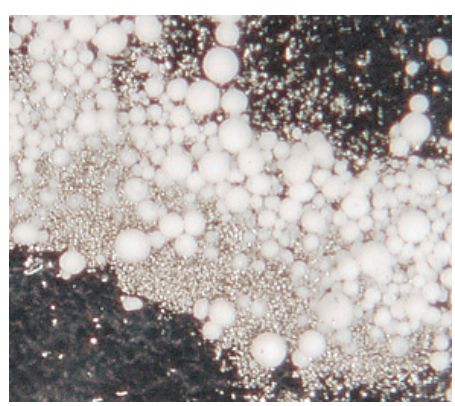

Figure 4: A photo micrograph of the mixture of nichrome and glass powders. The glass powder is the large white particles, the nichrome is the smaller particles, and the black is the slide background.

As shown in Figure 4, the glass particles are approximately 20 to 50 times larger than the nichrome particles. Two different types of glasses were used, and one turned out to work quite well with regards to adhesion to alumina. That glass was material #88 from Elan Technologies [3], and it was selected to adhere well to Kovar.

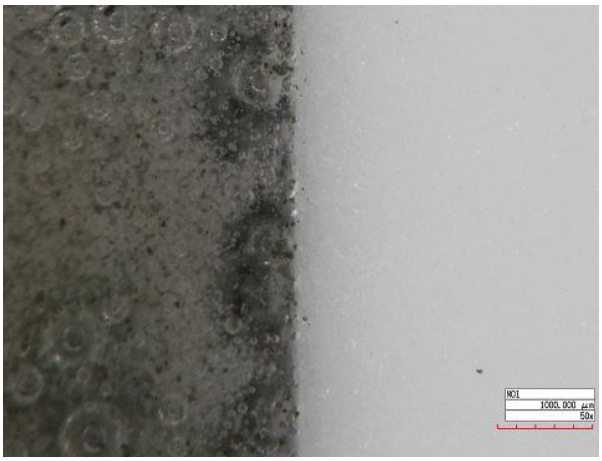

Figure 5: Magnified look at the interface between the alumina and glass-nichrome mixture after melting at 800°C.

In Figure ***5*** a close-up of the glass-nichrome mixture interface with the alumina is shown. While we did not perform specific stress tests on the interface, we succeeded in examining the cross-section by cutting through the test assembly. The aggressive grinding action did not damage the interface. One of the artifacts we were warned about by Elan Technologies was the formation of bubbles in the mixture during the melting process. This was a result of the glass powder manufacturing process. By special order, other processes can be employed for glass mixture #88, that will prevent the bubbles in the glass. The conclusions of these preliminary experiments with the resistive glass coating are (1) that the particle sizes of the two powders should be more similar and (2) that the glass itself should not be permitted to create bubbles during the melting process.

FUTURE RESEARCH PLANS

Gun Design

An inverted HV ceramic capable of 350 kV operation will be used. The HV connection will be optimized and tested during field emission tests. This project will consist of the design, development, and fabrication of a symmetric 350 kV photocathode electron gun. Surface gradients will be minimized to less than 10 MV/m, and remain below known values for troublesome field emission. The triple point junction will be carefully designed for reduced stress with the use of corona ring.
The design objectives will be three-fold.

(1) To change the present asymmetrically-fed HV design to one with the HV feed and inverted ceramic cathode electrode attachment on-axis, thus eliminating beam steering from the asymmetric fields.
(2) Reduce the surface fields on the cathode electrode by utilizing the design principle and preliminary electrode design determined in the Phase 1.
(3) To create an optics design (focus electrode and anode) that maximizes the active area of the photocathode, thus maximizing the operational lifetime of the cathode.

Ceramic Coating

The project will address the mixing problems between the glass frit and the doping material, which we believe was the primary cause of the non-uniformity and the bubbles in our test mixes. We will address the mixing issue by obtaining frit and powder of similar size, and exploring a wider range of mixing and heating/melting methods. Once a uniform melt is obtained we can easily determine the proper doping percentage to yield a coating resistivity on the order of 1 Gohm-cm. This will be applied to the inner surface of a cylindrical HV ceramic and tested with high voltage. We may also use this mixture in the triple junction region of the inverted ceramic gun design.

REFERENCES

[1] P. A. Adderley, J. Clark, J. Grames, J. Hansknecht, K. Surles-Law, D. Machie, M. Poelker, M. L. Stutzman, and R. Suleiman, "Load-locked dc high voltage GaAs photogun with an inverted-geometry ceramic insulator," Phys. Rev. ST Accel. Beams 13, 010101 (2010)
[2] N. Nishimori, et. al., "ERL09 WG1 SUMMARY: DC GUN TECHNOLOGICAL CHALLENGES"
[3] Patent 5667554, Issued September 16, 1997 to CTS Corporation. "Process of producing a low TCR surge resistor using a nickel chromium allow"
[4] Elan Technologies, PO Box 779, Midway, GA 31320, United States (912)880-3526, (912)880-3000 fax, http://www.elantechnology.com