The Isis Cold Moderators

G. M. Allen, T. A. Broome, R. A. Burridge, D. Cragg, D. Evans, R. Hall,
D. Haynes, J. Hirst,J. R. Hogston, H. J. Jones, J. Sexton and P. Wright.
Rutherford Appleton Laboratory,
Council for the Laboratory of the Research Councils,
Chilton, Didcot, Oxon, UK

1. INTRODUCTION

ISIS is a pulsed spallation neutron source where neutrons are produced by the interaction of a 160 kW proton beam of energy 800 MeV in a water-cooled Tantalum Target. The fast neutrons produced are thermalized in four moderators: two ambient water, one liquid methane operating at 100 K and a liquid hydrogen moderator at 20 K.

The methane and hydrogen moderators are crucial to the scientific exploitation of ISIS. Figure 1 shows the current layout of the 19 neutron scattering instruments 13 of which use the cold moderators. Seven instruments (SANDALS, PRISMA, ROTAX, MARI, LAD, HRPD and PEARL) on the methane moderator and five (SURF, CRISP, LOQ, OSIRIS and IRIS) use the hydrogen moderator.

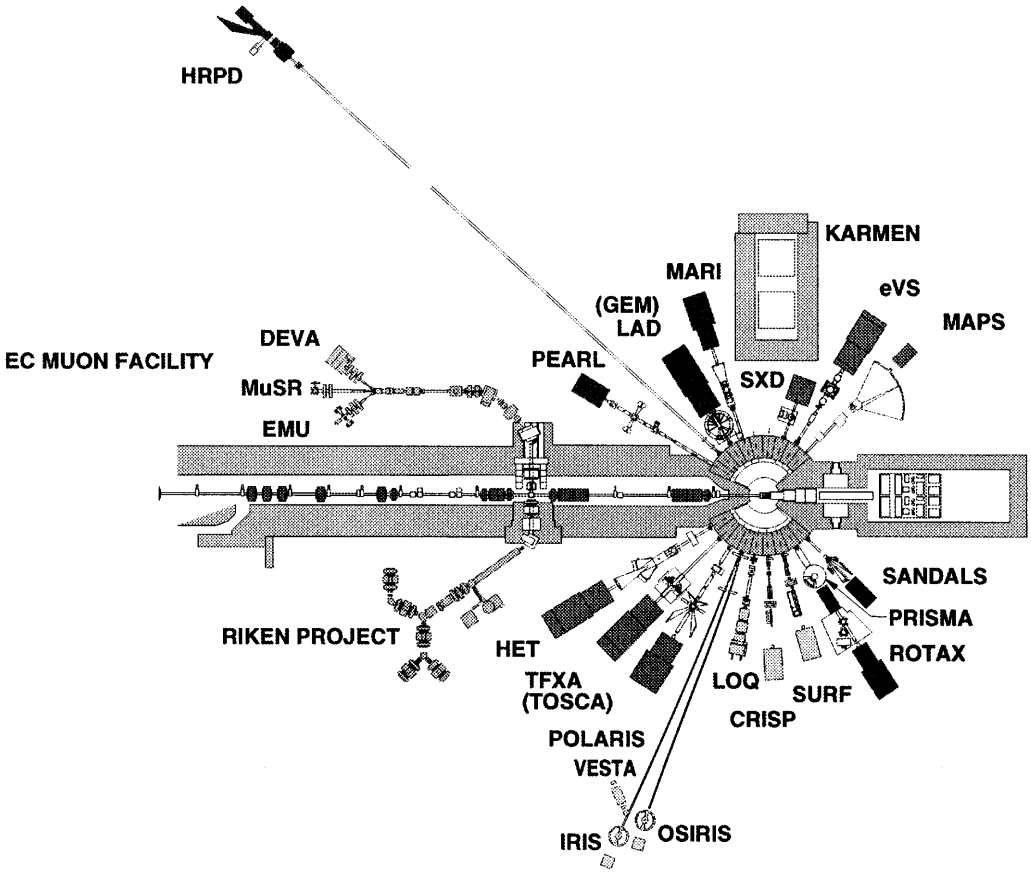

Figure 1. Layout of the ISIS Instruments.

This paper gives a description of the construction of both cold moderator systems, details of the operating experience and a description of the current development program.

2. MODERATOR LAYOUT AND GENERAL ENGINEERING DETAILS

Figure 2 shows the arrangement of the target, moderator and reflector assembly and Figure 3 is a photograph of the (partly) dismantled assembly showing the lower layer of reflector and the hydrogen and methane moderators.

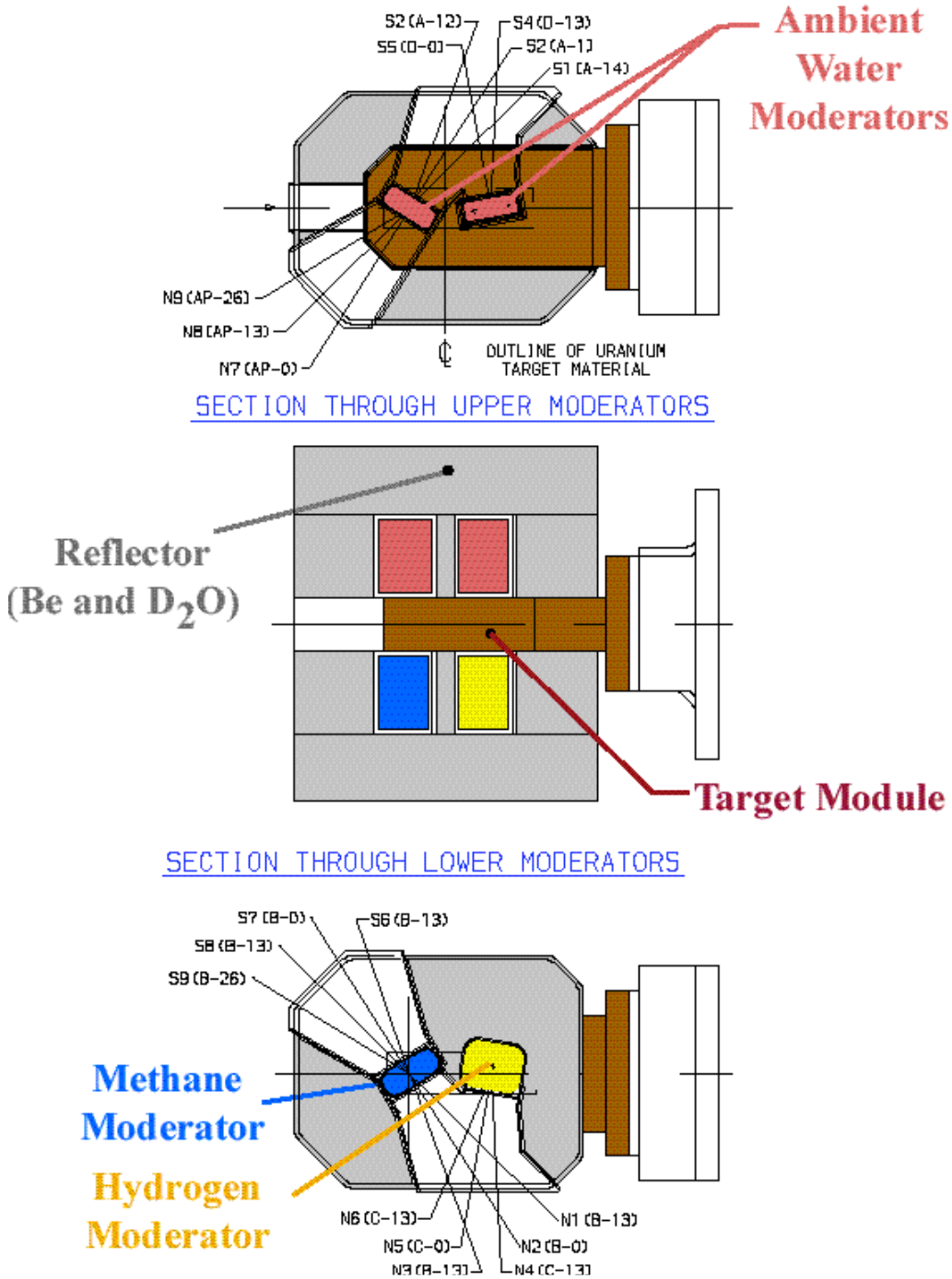

Figure 2. The ISIS Target, Moderator and Reflector Assembly.

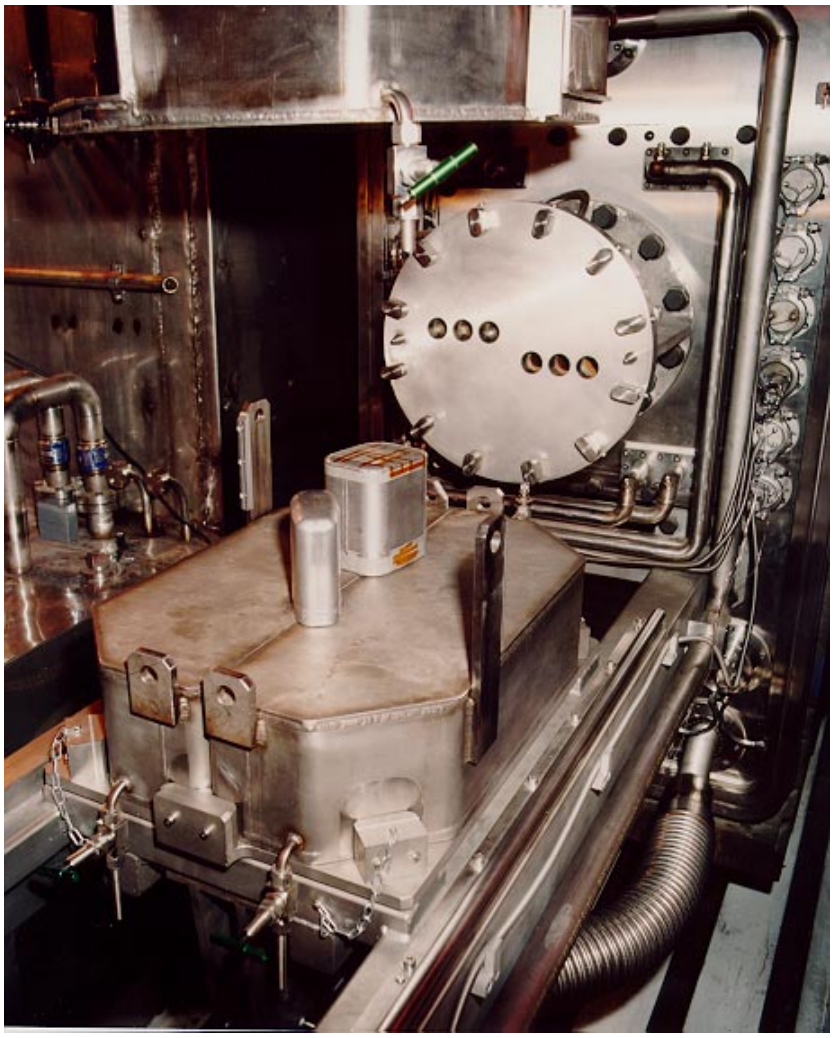

Figure 3. The Cold Moderators in position.

In operation, moderators are subject to dose rates of about 1000 Gy/hr. This requires the systems to have no organic materials and all metal seals. No superinsulation is used in either the hydrogen or methane moderators and thermal losses are minimized by attention to detail of the internal mounting. Replacement of the moderators is performed using fully remote handling techniques in a purpose built handling cell incorporated into the target station structure.

The refrigeration equipment, together with all cryogenic services and monitoring is situated within a shielded services area where operational dose rates are typically 1-2 Sv/hr. In this area the decay of short lived activity, mainly from the water cooling circuits of the target, reflector and moderator, means that hands on servicing is possible after a decay period of about 2 hours.

All services equipment for the target, moderator and reflector assembly is built on to rail mounted platforms forming a train which is used to transfer the assembly between the operating position and the remote handling cell.

Pipes carrying hydrogen or methane gas to the refrigeration equipment on the train are double walled for added safety with an inert gas supply to the annular space between them. Monitoring of the pressure in this annulus gives clear indication of gas leakage from the inner membrane.

Remote pressure monitoring of both the hydrogen and methane systems is by 'SHAEVITZ' strain gauge devices. These have proved very reliable and radiation tolerant. They are operated in

conjunction with electrical barrier systems to meet the intrinsic safety requirements. Temperature measurement of the hydrogen system is by germanium diodes, which are readily replaceable. The methane system uses platinum thermometers, which can also be replaced easily. Barrier systems are used in both cases to meet electrical safety standards.

All control valves, circulators, temperature and pressure sensors are grouped together into the hydrogen cold box or the methane transfer box respectively. These boxes also act as vacuum pumping stations for purging the systems.

The flow required to give a sufficiently small temperature rise across the moderator at full proton beam power is 0.5 l/sec for the hydrogen and 0.22 l/sec for the methane. This gives pressure drops of 1.2 bar for the hydrogen and 1.6 bar for the methane. Circulators running at 18,000 rpm have been developed to maintain these flow rates.

When warmed up, both of the systems vent into outside storage tanks, rather than straight to atmosphere. This affords tighter control over the venting and in the case of the methane, allows decay of the short half-life isotopes. However, direct atmospheric venting is still possible in an emergency. Venting of the storage vessels is carried out from the pressure control panels, which routes the gas out through a dedicated high level vent.

Both the hydrogen and methane systems are protected by relief valves, which are backed up by rupture discs. The vacuum systems are also provided with rupture discs to protect against positive pressure in the event of an internal leak.

3. HYDROGEN MODERATOR SYSTEM

In high radiation flux areas, frozen constituents of air can constitute a serious hazard because of highly volatile ozones and nitrides of oxygen. A secondary containment on the hydrogen system ensures a surface temperature always above the freezing point of such constituents. The interface is charged with helium gas. This containment extends over the moderator unit and over the entire length of the transfer lines to the hydrogen cold box.

The form of the moderator is a compromise between a flat sided vessel favored by neutronic considerations and a spherical vessel for best pressure vessel practice. Stressing was carried out using NASTRAN finite element analysis software. This resulted in a wall thickness of 8 mm for a pressure differential of 15 bar. The vessel is machined from a solid block of N5 magnesium/aluminium alloy. The vessel is friction welded at its neck to an austenitic stainless steel pipe.

The vacuum vessel, which is nominally shaped to match the main moderator vessel, is made from N8 magnesium/aluminium alloy and is 3 mm thick. The minimum gap between the main vessel and the vacuum vessel is 3 mm and careful positioning and construction is necessary to avoid any chance of touching. The outermost tertiary vessel further encloses the vacuum vessel creating a helium blanket.

The complete assembly is a welded fabrication designed to be replaced as a complete unit. The machining and fabrication tolerances are tight and dowelled location is used to ensure repeatability with a replacement unit.

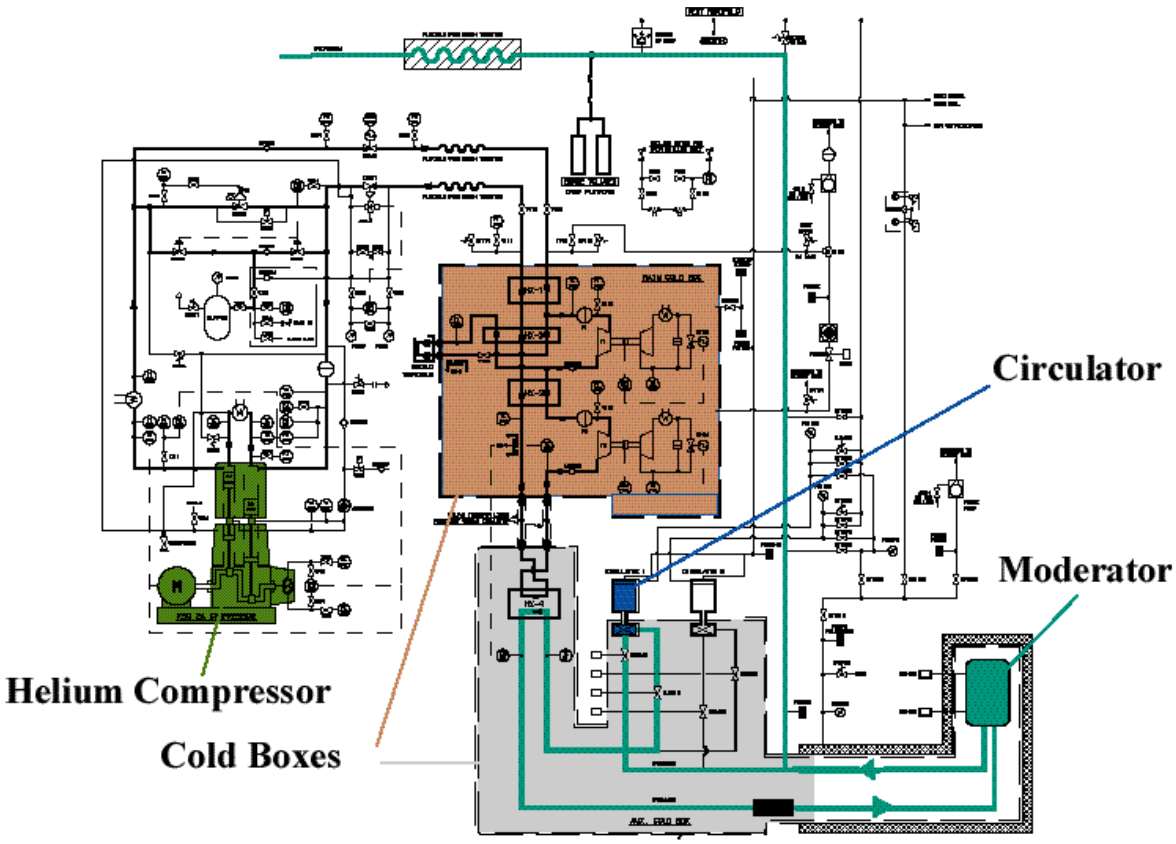

Figure 4. A Schematic Diagram of the Hydrogen Moderator circuit.

Figure 4 shows the circuit diagram of the system. The design pressure 15 barg at the highest pressure point of the circuit is about 2 bar above the critical pressure making the operational gas at 20 K supercritical. However, operating experience has shown that sub critical boiling does not occur and the system is run at about 10 barg at which pressure the hydrogen is liquid.

The refrigeration is provided by a two stage 'Brayton' cycle machine with a maximum pressure range of 16 to 2 bar abs. across two turbines in series. Helium gas is compressed in a two stage Sulzer K90 oil free compressor housed in an enclosure within the ISIS experimental hall. After compression the helium is cooled in a water-cooled heat exchanger. It is then piped to the service area and passed over the drum feed to the main cold box, which contains three heat exchangers and the two high-speed turbines. The design gas flow is 35 g/s and the design output is 600W at 20K plus 150W at 80K. The 80K output was not used in the final system design, which increases the output available at 20K. Gas from the second turbine is passed through a transfer line to a second cold box containing a fourth heat exchanger, which interfaces the cold helium with the hydrogen loop. The second cold box also houses the circulators and their isolation cryovalves. The electrical heater, which controls the main loop is in the main cold box on the return line from the second box.

The hydrogen pressure is held between limits approximately 0.5 bar apart by a pressure control system, which admits or vents gas accordingly. The hydrogen temperature is controlled indirectly by an electrical heater in the refrigeration loop, which operates in conjunction with a temperature sensor in the hydrogen cold box. This sensor is sited in the moderator flow leg as close as possible to the transfer line connection.

4. METHANE MODERATOR SYSTEM

General design and materials are similar to those of the hydrogen system. The same method of assembly is adopted, but without the need for a tertiary containment, the overall construction is much simpler. A gadolinium layer is required on the median line, which for ease of assembly has an aluminium frame to retain its shape. This is slotted into the main methane feed tube and seam welded. The nominal volume of the methane moderator is half that of the hydrogen although the rest of the circuit is almost the same as the transfer lines were standard and followed the same route. The maximum working pressure of the system is 4 bar abs. resulting in a wall thickness of 3 mm which is the same as the thickness of its vacuum vessel.

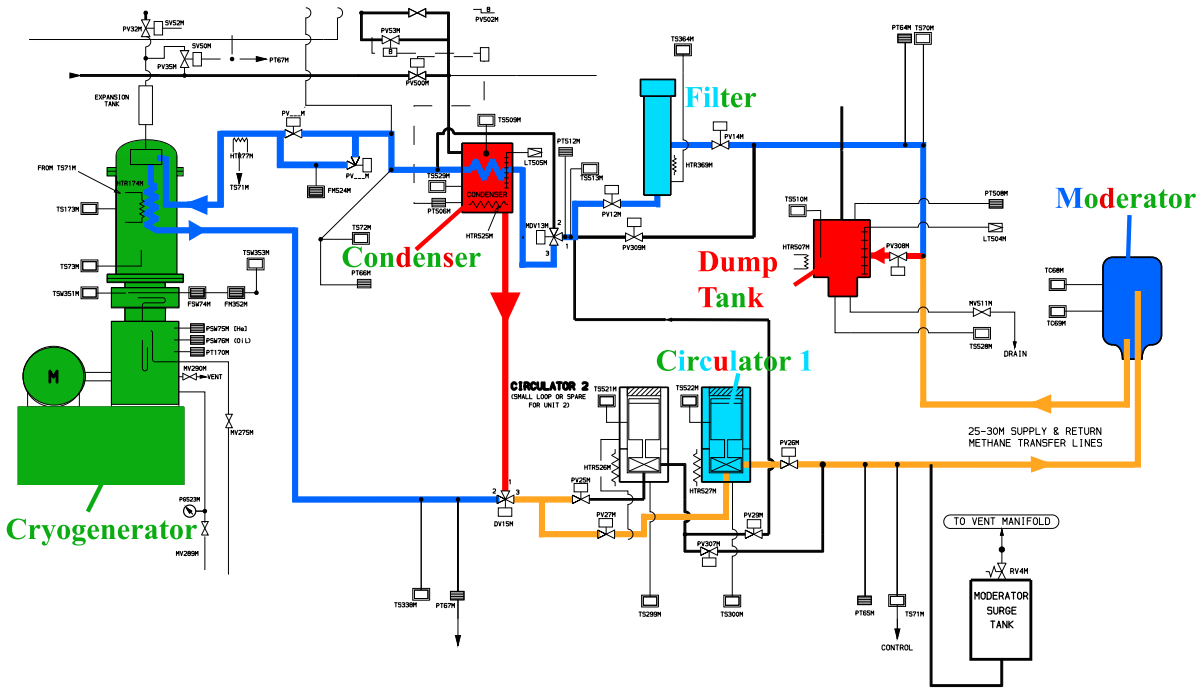

Figure 5. A Schematic Diagram of the Methane Moderator circuit.

The liquid methane design flow rate is 0.22 l/sec (96.6 g/sec) against a head loss of approximately 1.6 bar. The maximum pressure at the delivery point of the circulator is normally 4 bar so that the lowest pressure in the system at 2.4 barg represents a saturation temperature of approximately 123 K.

In ionizing radiation, methane readily polymerises resulting in the production of oils, waxes and solids. Considerable quantities of hydrogen gas are also produced. To remove the oils and hydrogen the liquid charge is replaced, every one or two days whilst at operational temperature and with the proton beam on. Surplus refrigerator capacity is used in a condenser to produce a fresh charge of liquid methane in a completely separate circuit and at the same time a dump vessel is precooled ready to receive the old contaminated liquid. Remotely driven cryogenic diverter valves allow a small loop to be configured to keep the refrigerator in a standby state, and flow is then diverted from the condenser into the main loop displacing the old liquid into the dump tank. This operation takes around one minute, after which the original loop can be re-instated. The old liquid is then boiled away in a controlled manner. Heavy oils are washed out of the tank periodically with a suitable solvent such as methyl ethyl ketone.

All the cryogenic valves are of RAL design and are pneumatically driven for safety reasons. Each can be removed for servicing without breaking into the vacuum vessel and all valve states are displayed by the control system.

Refrigeration is by a Philips PG1O2S Stirling cycle machine using helium as a refrigerant. The unit is cooled by a chiller which provides water at a controlled 2-3 C. The refrigerator produces 1000 W of cooling at 100 K and is run at maximum power at all times, temperature control being provided by an electrical heater.

There are three independent pressure control systems

i) Main loop
ii) Condenser
iii) Dump tank

This allows the circuits to be matched before opening the cryovalves to carry out a dump operation. All three systems share a common feed line and a common vent line connected to the main distribution panels outside the area. Each system has inlet and exhaust valves operated by their individual pressure monitoring systems to maintain pressures within a band of about 0.5 bar. Platinum temperature sensors are sited in the transfer box, which is between the refrigerator and the transfer line. Monitoring is made immediately before and after the transfer line, on each side of the refrigerator and just before the condenser. The sensor used for overall temperature control is that in the flow leg just before the outlet to the transfer line. The system gives priority to the refrigeration power required in the main loop by adjusting the flow through the condenser.

5. OPERATIONAL EXPERIENCE

Development of circulators for both moderator circuits took some time. They now run very reliably and are changed after, typically, 1000 hours of operation and overhauled.

There have been essentially no operational problems with the hydrogen system for many years.

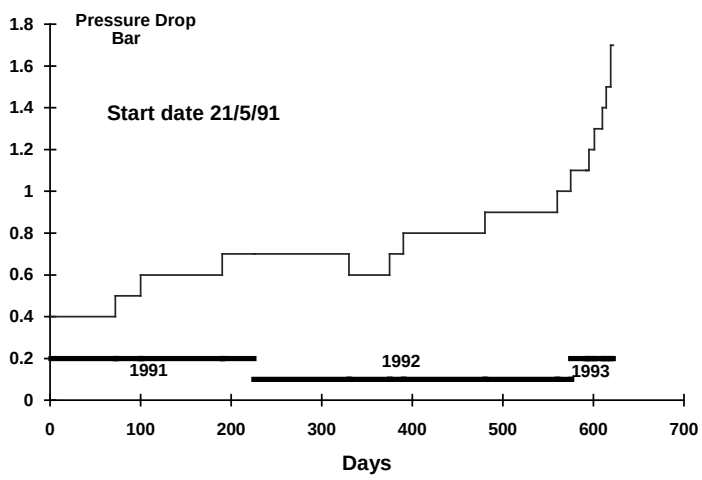

Figure 6. The Increase in Pressure Drop Across the Moderator.

There are serious operational difficulties with the methane system. Hydrogen gas production causes circuit instability and density variations. Reversal of the flow direction and detailed changes to the geometry of the inlet pipe went some way to alleviating these problems. However, variations in the neutron spectrum which are of concern to the users remain so a signal is provided to inhibit data taking if the moderator temperature rises more than 15 K above the nominal operating temperature. Data taking time is also lost during the on-line liquid replacement.

Formation of high mass hydrocarbons eventually leads to a blockage in the moderator. Figure 6 shows the increase in pressure drop across the first moderator used with time. This moderator was dismantled in a hot cell and Figure 7 shows the extensive solid deposits.

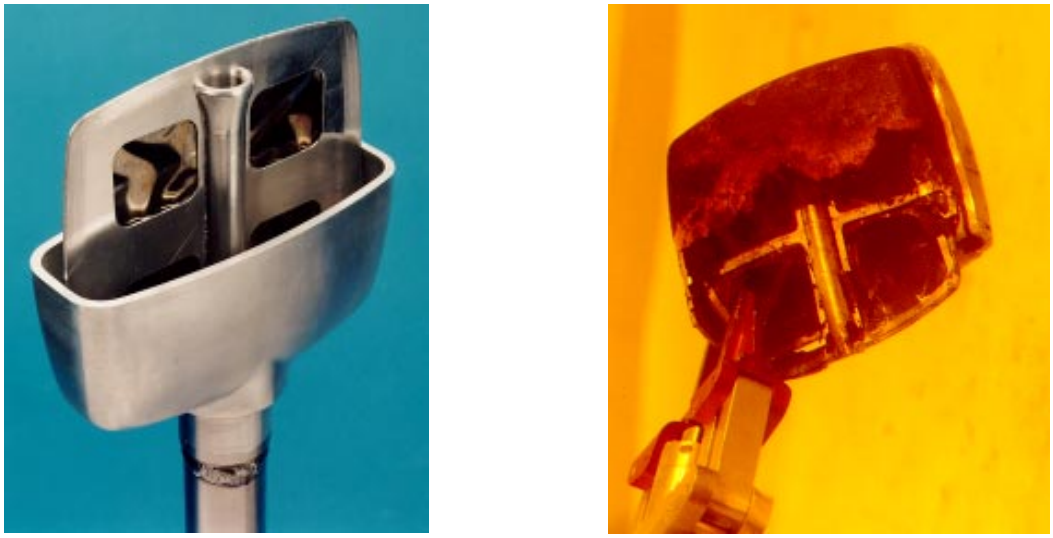

(a) (b)

Figure 7. The Buildup of 'Carbon-Like' Deposits (b) compared to a new moderator (a).

In addition, the neutron spectrum degrades as the deposits build up in the moderator, shown in figure 8 for the first moderator. To mitigate these effects the current practice is to replace the moderator after about 100 days of operation, which maintains acceptable performance. This task takes four weeks and produces considerable radioactive waste material.

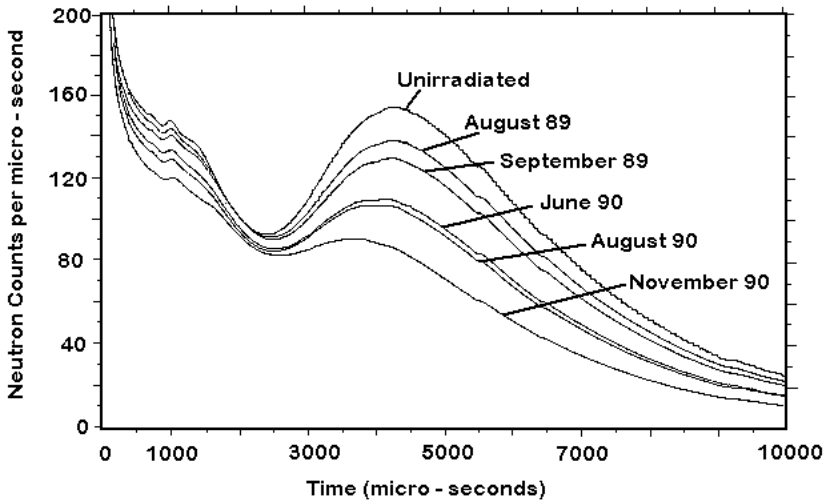

Figure 8. The Effect of Irradiation on the Neutron Spectrum.

Table 1 gives the operating life of the moderators used to date.

Table 1. The operating lifetimes of the Methane Moderators.

Moderator	Integrated Proton Current mAh
#1 single foil	747
#2 single foil	930
#3 double foil (reverse flow)	377
#4 single foil (reverse flow)	451
#7 as 4 with modified inlet pipe	142
#8 as 7	136
#10 as 7	219
#11 as 7	451
#12 as 7	344

Note that the moderator numbers missing from the sequence are those manufactured but not used. Number 3 had two poison foils but no advantage was found in the resulting neutron spectra so the single poison foil design was used thereafter.

6. DEVELOPMENT

Three approaches are being used to reduce the operational effects of radiation damage in the methane. The system is being modified so that a solvent can be used, in shut down periods, to remove the soluble deposits. A temporary arrangement has been used, in the past, to flush the pipework with methyl ethyl ketone. Considerable quantities of contaminants were removed. The hope is that using this procedure frequently will substantially extend the time taken for the system to block.

The design of pipework in the region of the cryogenerator cold head is being changed to give a region of slow flow and a larger gas volume. This will allow much more hydrogen gas to naturally vent from the system.

An experimental study of the radiochemical processes leading to the formation of polymers is underway.

Hydrogen and paraffinic wax are the major reaction products of the irradiation of methane but the reaction path is not well understood.

The radiolysis of gaseous methane has been widely studied [see, for example, 1]. The initial interaction of high energy radiation with methane is to liberate a hydrogen atom and a methyl radical. It is known that when solid methane is irradiated at 4K, hydrogen and methyl radicals are both present and do not react, until the temperature is raised to some unknown temperature, believed to be less than 20K. If these radicals reacted to re-form methane, there would not be an overall change as a result of the irradiation.

Atomic hydrogen will not react with methane at temperatures below 20 C therefore, it would seem most probable that the atomic hydrogen produced, from the irradiation of methane, will react (by hydrogen abstraction), to produce molecular hydrogen and a di-radical:

$$*CH_3 + H^* \text{ ---> } *C*H_2 + H_2$$

The polymer that is formed in the moderator circuit following bombardment with neutrons, possibly results from a dimerization type reaction of the methylene di-radical ($*C*H_2$).

From the observations on the reaction of atomic hydrogen with ethene, it is conceivable that short chain unsaturated compounds, for example ethene or propene, when mixed with liquid or solid methane, may be effective in reducing the evolution of hydrogen gas following low temperature irradiation.

$$C_2H_4 + 2H^* \rightarrow C_2H_6$$

The presence of the unsaturated material may encourage the addition of atomic hydrogen across the double bond, particularly at low temperatures, rather than the abstraction of a further atom to form molecular hydrogen. Preventing the 'abstraction' reaction, may also prevent the formation and polymerisation of methylene radicals and therefore inhibit the formation of polymer and reduce the production of free hydrogen gas.

Atomic hydrogen is also known to react readily with propane, producing methane by direct hydrogenation. The thermodynamic properties of ethene, propene and propane mean that liquid mixtures of these materials with methane at 110 K are stable.

The model of the radiochemistry, outlined above, will be tested experimentally by irradiating liquid methane in the CARE reactor of the Imperial College of Science Technology and Medicine, University of London. A schematic diagram of the apparatus is shown in Figure 9.

The yield of hydrogen and polymers in a known volume of methane and for a known dose will be measured for the combinations of methane and additives listed in Table 2.

Table 2. The Proposed Experimental Program.

Test Number	Components Irradiated	Additive Conc. (Vol %)	Purpose
1	Liquid Methane	---	Confirm 'G' values for Methane Dosimetry
2	Only		
3	Methane +Ethene	0.5	To examine quantities of hydrogen gas and polymer formed with additive type and concentration
4	Methane + Propene	0.5	
5	Methane + Propane	0.5	
6	Methane + Ethene	2.5	
7	Methane + propene	2.5	
8	Methane + Propane	2.5	
9	Methane + Al Foam	---	Remove heat and encourage reaction
10	Methane + Al Foam	---	

From the initial measurements of dose rate in the reactor beam tube to be used in the experiment, 0.03 MGy/h, and the published "G" values for the irradiation of liquid methane the total amounts of polymer and hydrogen gas likely to be produced have been estimated and are shown in Table 3.

Table 3. Radiochemical Yields from Methane.

Product	'G' Value (μmoles/Joule)	Production Rate in the CARE Reactor
Hydrogen	0.66	19 cm^3h^{-1}
Polymer $(-CH_2-)_n$	0.22	0.09 gh^{-1}

Initially, the apparatus, of known volume, will be filled with methane gas to a defined pressure at ambient temperature. The system will be cooled to l00 K liquefying the methane in the sample can which will be irradiated to a measured total dose. The volume of hydrogen generated will be determined when the temperature of the apparatus has been returned to ambient by, first selectively removing the methane with a cryopump, then pumping the hydrogen out of the apparatus with a mechanical pump and finally collecting it over water in a measuring cylinder. Any 'polymer' formed will be estimated by flushing the apparatus with methyl ethyl ketone and weighing the residue after evaporation. In this manner, the 'G' values for hydrogen and polymer formation will be determined. The additive concentrations listed in Table 2 are tentative at this stage, there are

currently no guidelines to follow. The purpose of the aluminium foam is to provide a high surface area, high thermal conductivity heat exchanger. It is possible that if the heat of reaction can be removed, the 'back' reaction of methyl radicals and hydrogen radicals may be encouraged.

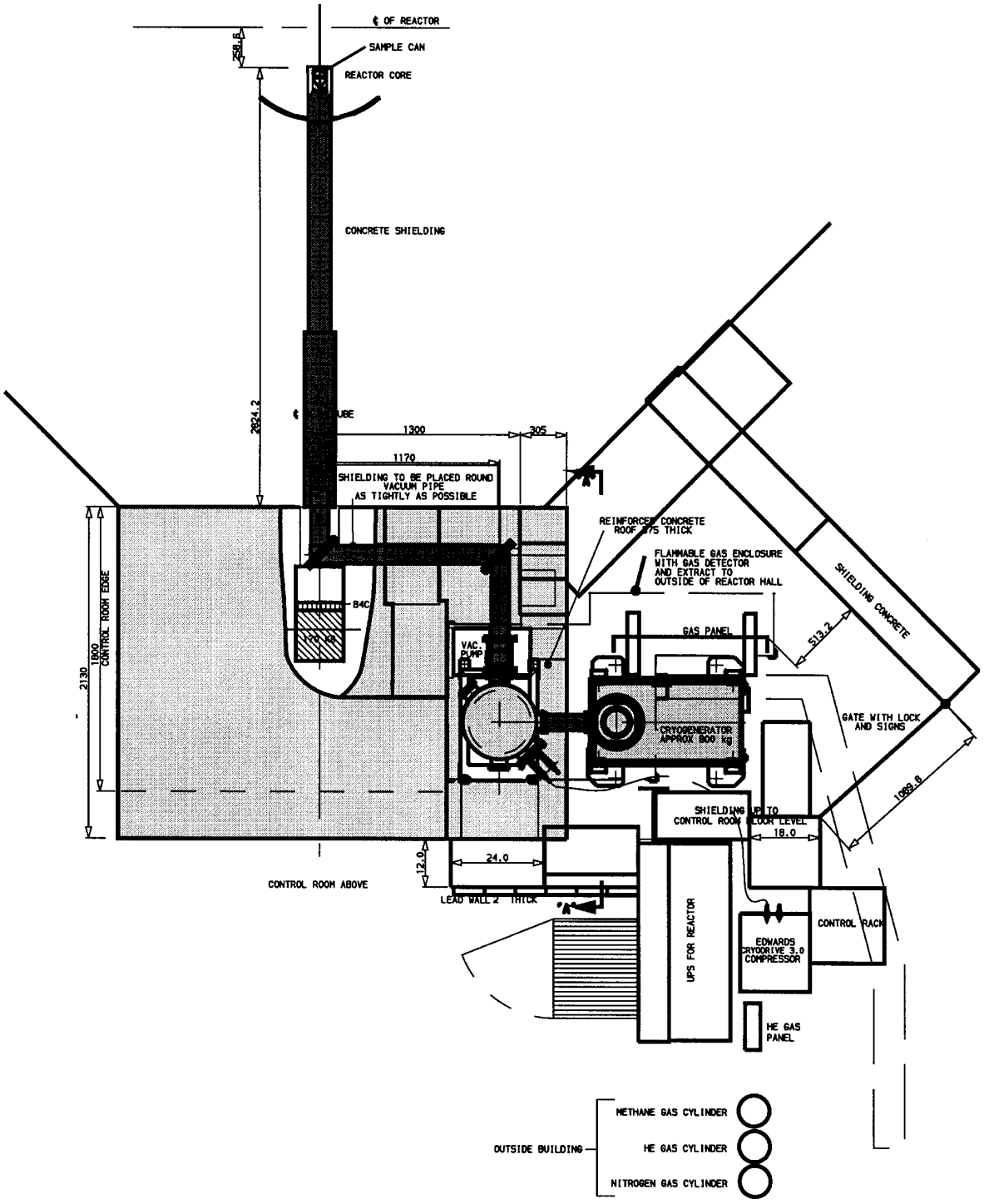

Figure 9. Schematic diagram of the Irradiation Experiment.

ACKNOWLEDGMENTS

It is a pleasure to acknowledge Trevor Lucas, Brian Diplock and Peter Clayton who were the original designers of the moderator systems. The successful operation of the moderators over many years is a testament to their excellent work.

We would also like to acknowledge the forbearance of the users and their support of our work to find a solution to the operational problem caused by radiation damage to the methane.

REFERENCE

[1] Introduction to Radiation Chemistry (3rd Edition) J. W. T. Spinks and R. J. Woods, John Wiley and Sons. Inc., 1990, ISBN 0-471-61403-3